ABB Drives

User's Manual
TTL Encoder Interface
FEN-01

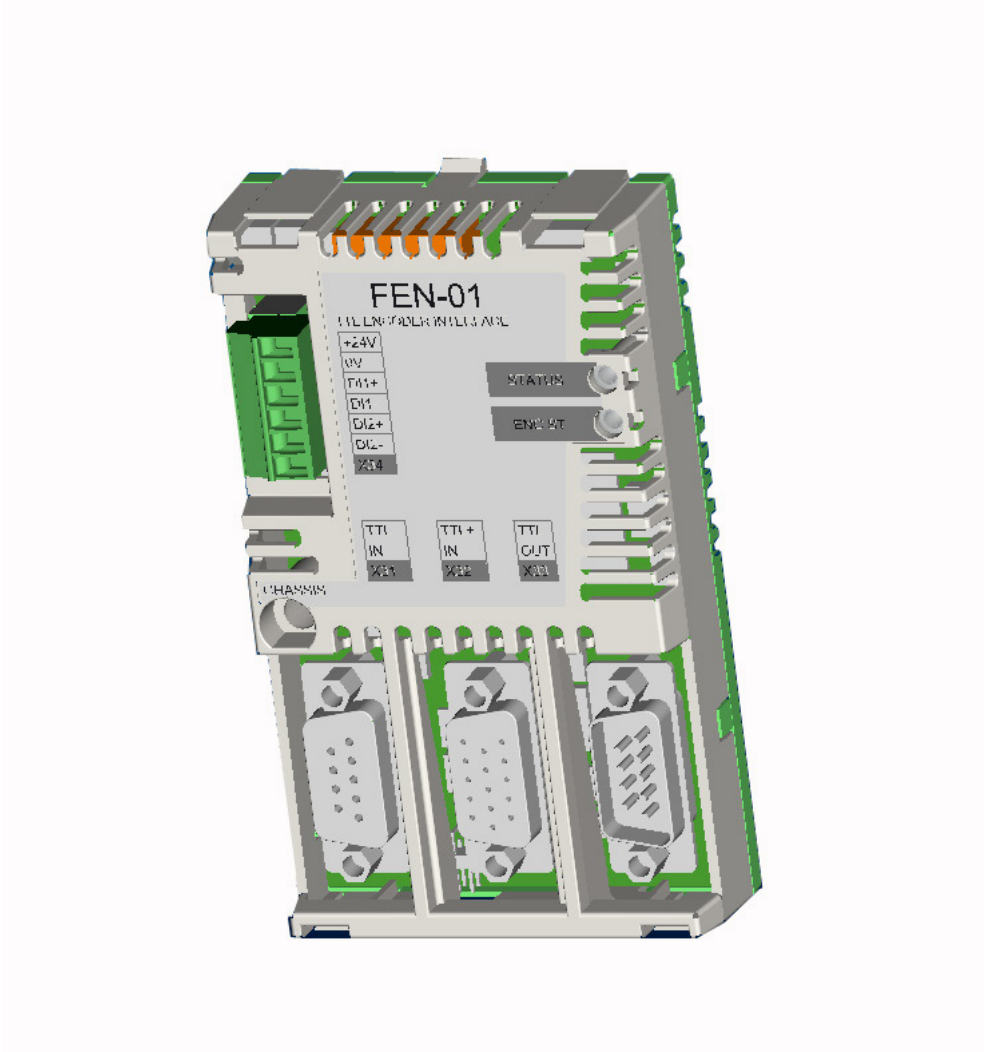

TTL Encoder Interface
FEN-01

User's Manual

3AFE68784603 Rev C EN

EFFECTIVE: 20.04.2007

© 2007 ABB Oy. All Rights Reserved.

Safety instructions

Overview

This chapter states the general safety instructions that must be followed when installing and operating the FEN-01 TTL Encoder Interface.

In addition to the safety instructions given below, read the complete safety instructions of the specific drive you are working on.

These warnings are intended for all who work on the drive. Ignoring the instructions can cause physical injury or death, or damage the equipment.

General safety instructions

Warning! All electrical installation and maintenance work on the drive should be carried out by qualified electricians only.

The drive and adjoining equipment must be properly earthed.

Do not attempt any work on a powered drive. After switching off the mains, always allow the intermediate circuit capacitors 5 minutes to discharge before working on the frequency converter, the motor or the motor cable. It is good practice to check (with a voltage indicating instrument) that the drive is in fact discharged before beginning work.

The motor cable terminals of the drive are at a dangerously high voltage when mains power is applied, regardless of motor operation.

There can be dangerous voltages inside the drive from external control circuits even when the drive mains power is shut off. Exercise appropriate care when working on the unit.

Table of contents

Safety instructions ***5***

Overview 5
General safety instructions 5

Table of contents ***7***

Introduction ***9***

Intended audience 9
Before you start 9
What this manual contains 9

Overview ***11***

Overview 11
The FEN-01 TTL Encoder Interface 11
Compatibility 12

Installation ***13***

Setting the supply voltage 13
Mounting 14
Terminal designations 15
Encoder wiring 18
Phasing 24
Programming 24

Fault tracing ***25***

Diagnostic LEDs 25

Technical data ***27***

Introduction

Intended audience

The manual is intended for the people who are responsible for commissioning and using the FEN-01 TTL Encoder Interface. The reader is expected to have a basic knowledge of electrical fundamentals, electrical wiring practices and how to operate the drive.

Before you start

It is assumed that the drive is installed and the drive power supply is switched off before starting the installation of the extension module. Ensure that all dangerous voltages connected from external control circuits to the inputs and outputs of the drive are switched off.

In addition to conventional installation tools, have the drive manuals available during the installation as they contain important information not included in this manual. The drive manuals are referred to at various points of this document.

What this manual contains

This manual contains information on the wiring, configuration and use of the FEN-01 TTL Encoder Interface.

Safety instructions are featured in the first few pages of this manual.

Overview contains a short description of the FEN-01.

Installation contains instructions for hardware settings, mounting and cabling.

Fault tracing explains the LED indications of the FEN-01.

Technical data contains detailed technical information.

Overview

Overview

This chapter contains a short description of the FEN-01 TTL Encoder Interface.

The FEN-01 TTL Encoder Interface

The FEN-01 offers an interface for two TTL encoder connections, one with commutation signals and PTC support. It also offers a TTL encoder output for emulation purposes and two digital latch inputs for position latching.

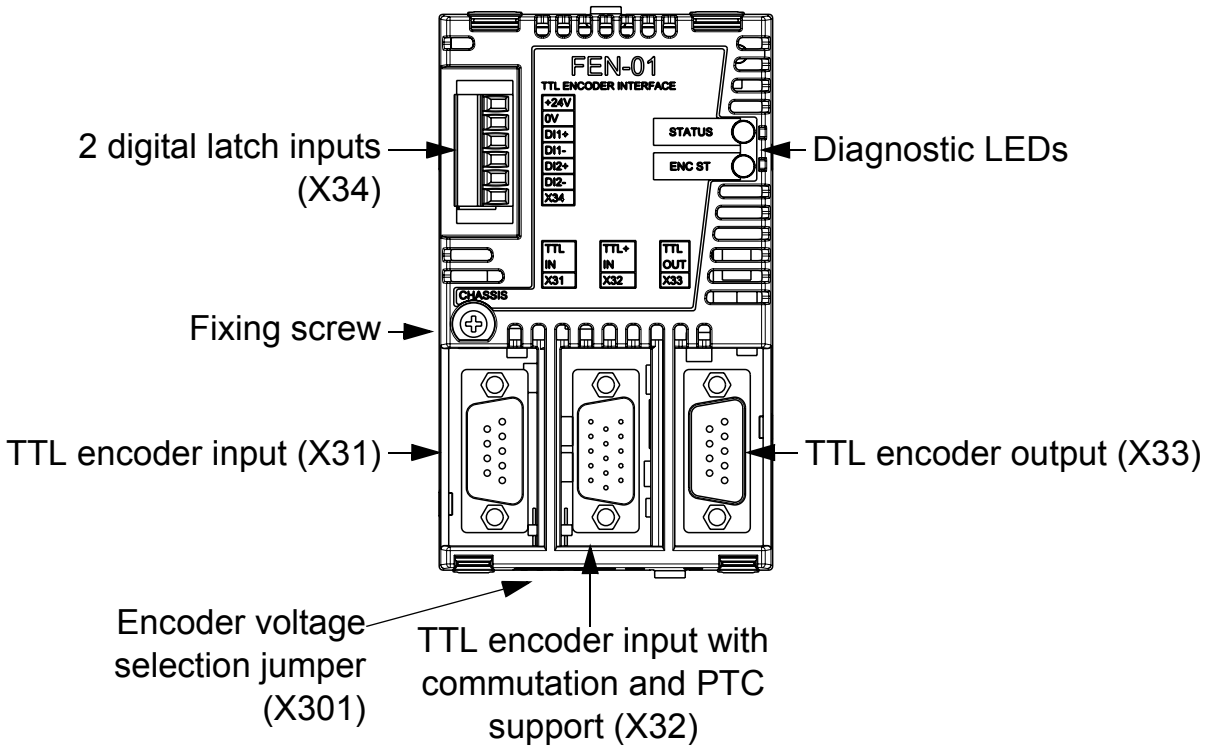

FEN-01 layout

Isolation areas

The following figure describes the different isolation areas of the module.

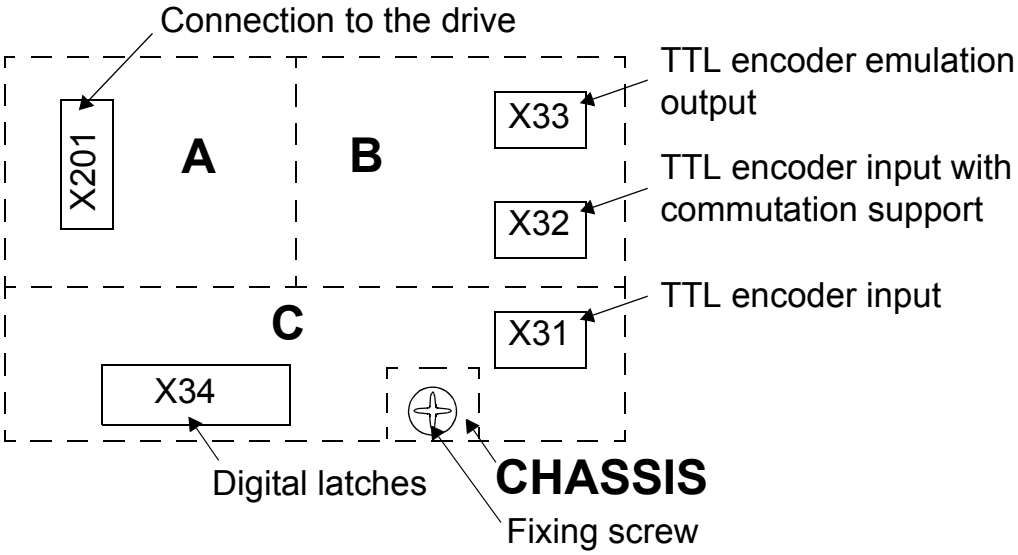

The shields of sockets X31 and X32 and plug X33 are connected to chassis. The fixing screw connects the chassis to ground.

Compatibility

FEN-01 is compatible with the following encoders.

- TTL incremental encoder, 1…65535 pulses / rev, supports reference mark
- TTL incremental encoder, 1...65535 pulses / rev, supports block commutation and reference mark

Installation

Warning! Follow the safety instructions given in this guide and in the drive's hardware manual.

Setting the supply voltage

Warning! Selecting the wrong supply voltage may damage or break the encoder.

A selectable supply voltage is provided for the TTL encoders' input. A +5.5 V or a +24 V voltage for either TTL encoder can be selected by vertically mounted jumpers as described by the following figure.

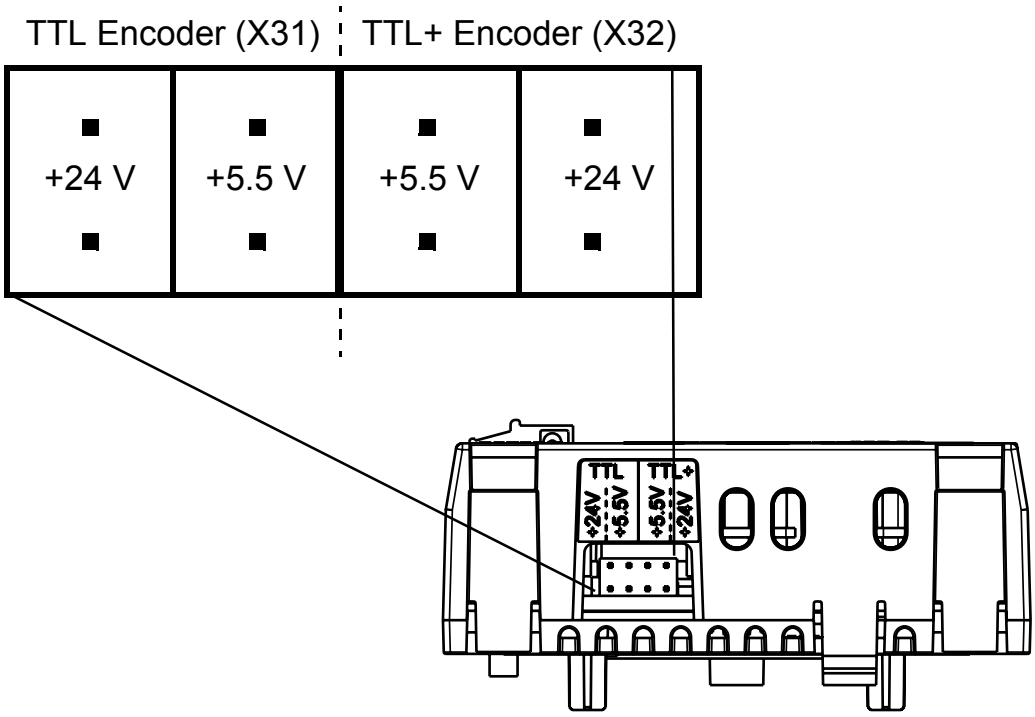

Supply voltage jumpers

Note: If an external power supply is used, the appropriate jumper must be removed.

Note: If another FEN interface's TTL emulation output is connected to TTL input, the appropriate jumper must be removed.

Mounting

Warning! Before installation, switch off the drive power supply. Wait for five minutes to ensure that the capacitor bank of the drive is discharged. Switch off all dangerous voltages connected from external control circuits to the inputs and outputs of the drive.

Note: Before mounting the module, set the supply voltage jumpers as described above.

The FEN-01 is to be inserted into the option slot of the drive. See the drive hardware manual for more information.

The module is held in place with plastic retaining clips and one screw. The screw also provides the earthing of the cable shields connected to the module and interconnects the GND signals of the module and the drive.

On installation of the module, the signal and power connection to the drive is automatically made through a 20-pin connector.

Mounting procedure:

- Insert the module carefully into the option slot until the retaining clips lock the module into position.
- Fasten the screw (included) to the stand-off.

Note: Correct installation of the screw is essential for fulfilling the EMC requirements and for proper operation of the module.

Terminal designations

Abbreviations

AI	Analog in
DI	Digital in
DO	Digital out
PO	Power out

TTL encoder input (X31)

Pin	Name	Direction	Description
1	A+	DI	Channel A+
2	B+	DI	Channel B+
3	Z+	DI	Channel Z+
4	COM_C	-	Common
5	VCC_ENC_1	PO	Supply voltage (5.5 V or 24 V)
6	A-	DI	Channel A-
7	B-	DI	Channel B-
8	Z-	DI	Channel Z-
9	COM_C	-	Common
-	Shield	-	Shield

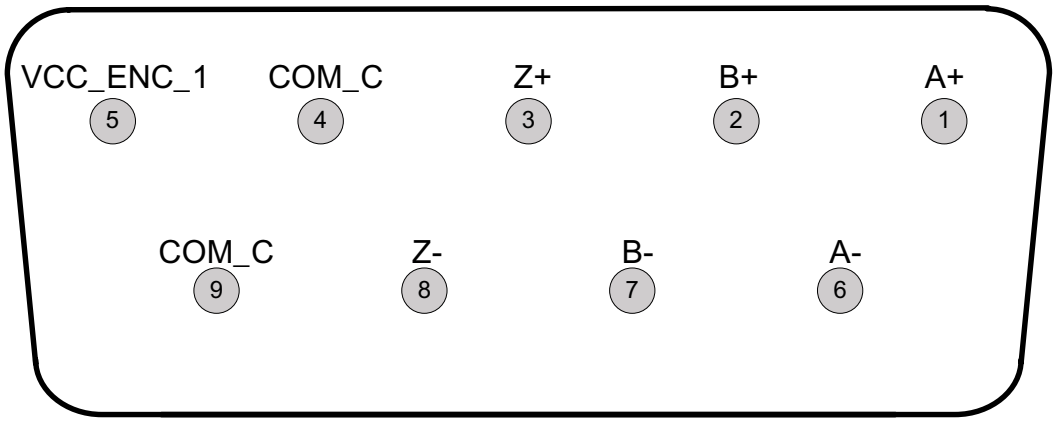

TTL encoder input (X31) pin order

TTL encoder input with commutation signal support (X32)

Pin	Name	Direction	Description
1	A+	DI	Channel A+
2	B+	DI	Channel B+
3	PTC	AI	Temperature sensor
4	U+	DI	Channel U+
5	V+	DI	Channel V+
6	A-	DI	Channel A-
7	B-	DI	Channel B-
8	Z+	DI	Channel Z+
9	U-	DI	Channel U-
10	V-	DI	Channel V-
11	VCC_ENC_2	PO	Supply voltage (5.5 V or 24 V)
12	COM_B	-	0V, common
13	Z-	DI	Channel Z-
14	W+	DI	Channel W+
15	W-	DI	Channel W-
-	Shield	-	Shield

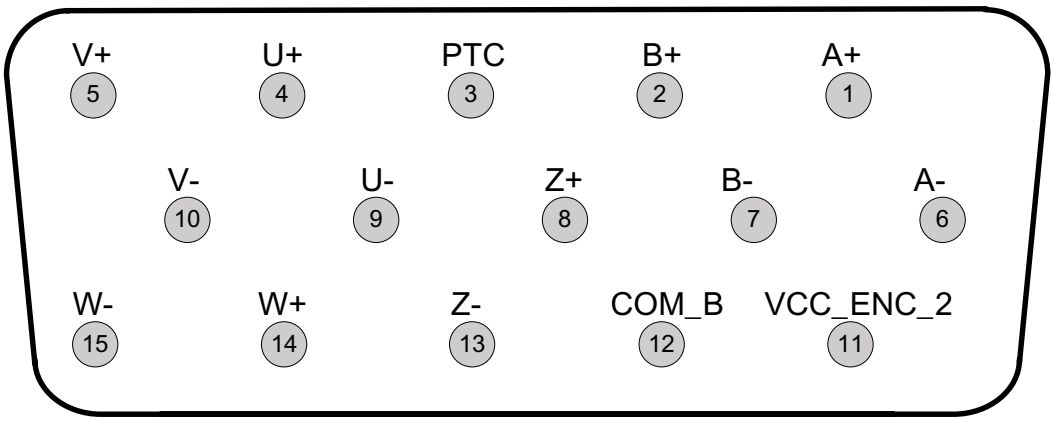

TTL encoder input (X32) pin order

TTL encoder emulation output (X33)

Pin	Name	Direction	Description
1	EM_A+	DO	Channel A+
2	EM_B+	DO	Channel B+
3	EM_Z+	DO	Channel Z+
4	COM_B	-	Common
5	COM_B	-	Common
6	EM_A-	DO	Channel A-
7	EM_B-	DO	Channel B-
8	EM_Z-	DO	Channel Z-
9	COM_B	-	Common
-	Shield	-	Shield

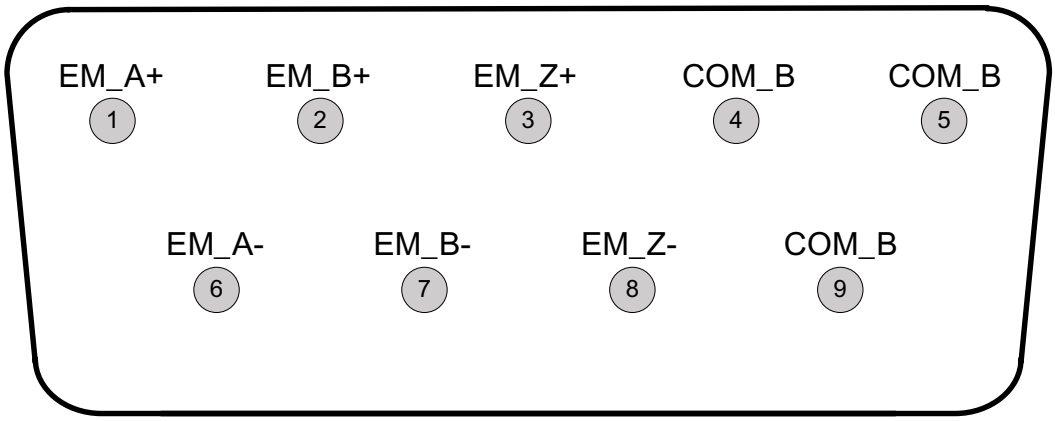

TTL encoder emulation output (X33) pin order

Digital inputs for position latching (X34)

Pin	Name	Direction	Description
1	+24V_C	PO	Supply voltage
2	COM_C	-	Common
3	DI_1+	DI	Latch signal 1
4	DI_1-	-	Latch signal 1 return
5	DI_2+	DI	Latch signal 2
6	DI_2-	-	Latch signal 2 return

Encoder wiring

The encoders should be connected to the FEN-01 with a shielded instrumentation cable, preferably with twisted pairs. See also the encoder manual for additional requirements. To prevent the encoder inputs from being disturbed, the cable shield must be connected to the chassis. The connection is made automatically through the metal hood of the plug, if the cables are connected through the cable clamp of the plug.

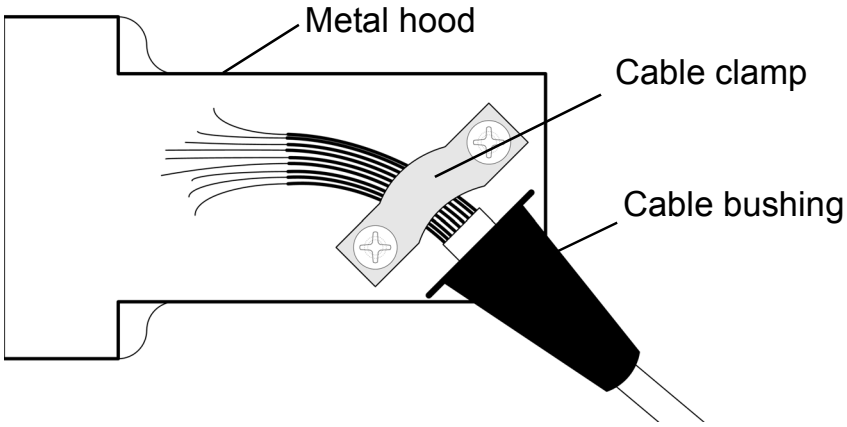

Cable shield connected to the cable clamp

Note: Do not route the encoder cables parallel to power (e.g. motor) cables.

Tightening torque is 0.3 Nm (2.7 lbf·in.) for the plugs.

The allocation of cable pairs is described for each connector in the following tables.

TTL encoder input (X31)

The cable should have minimum 4 cable pairs. A fifth cable pair shared between Vcc an 0V pins allows for a longer cable.

Cable pair number	Signals name	X31 connecting plug pin number (9-pins)	Notes
1	A+	1	
	A-	6	
2	B+	2	
	B-	7	
3	Z+	3	
	Z-	8	
4	VCC_ENC_1	5	
	COM_C	9	
5	VCC_ENC_1*	5*	OPTIONAL
	COM_C	4	OPTIONAL

* Two wires soldered to the same pin.

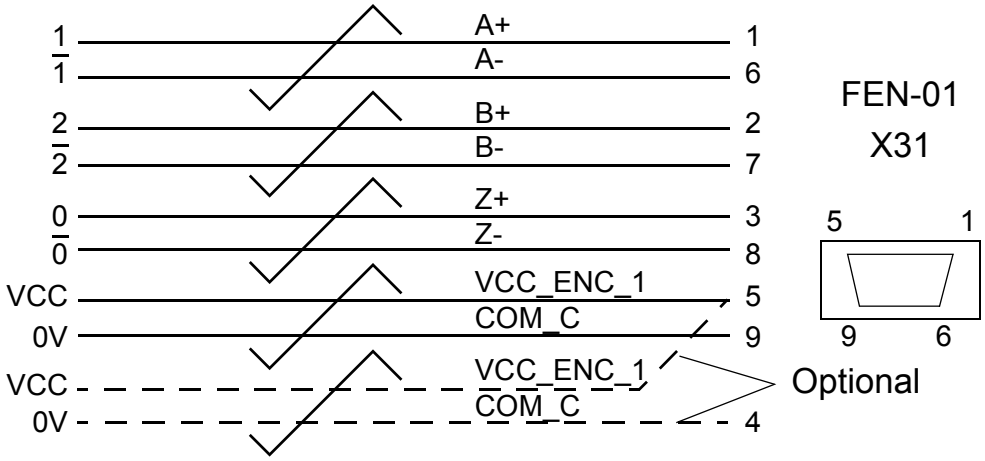

TTL encoder input (X31)

TTL encoder input with commutation signal support (X32)

The cable should have minimum 8 cable pairs. An extra pair shared between Vcc and 0 V allows for a longer cable.

Cable pair number	Signals name	X31 connecting plug pin number (9-pins)	Notes
1	A+	1	
	A-	6	
2	B+	2	
	B-	7	
3	Z+	8	
	Z-	13	
4	U+	4	
	U-	9	
5	V+	5	
	V-	10	
6	W+	14	
	W-	15	
7	VCC_ENC_2	11	
	COM_B	12	
8	PTC	3	
	COM_B	12*	

* Two wires soldered to the same pin.

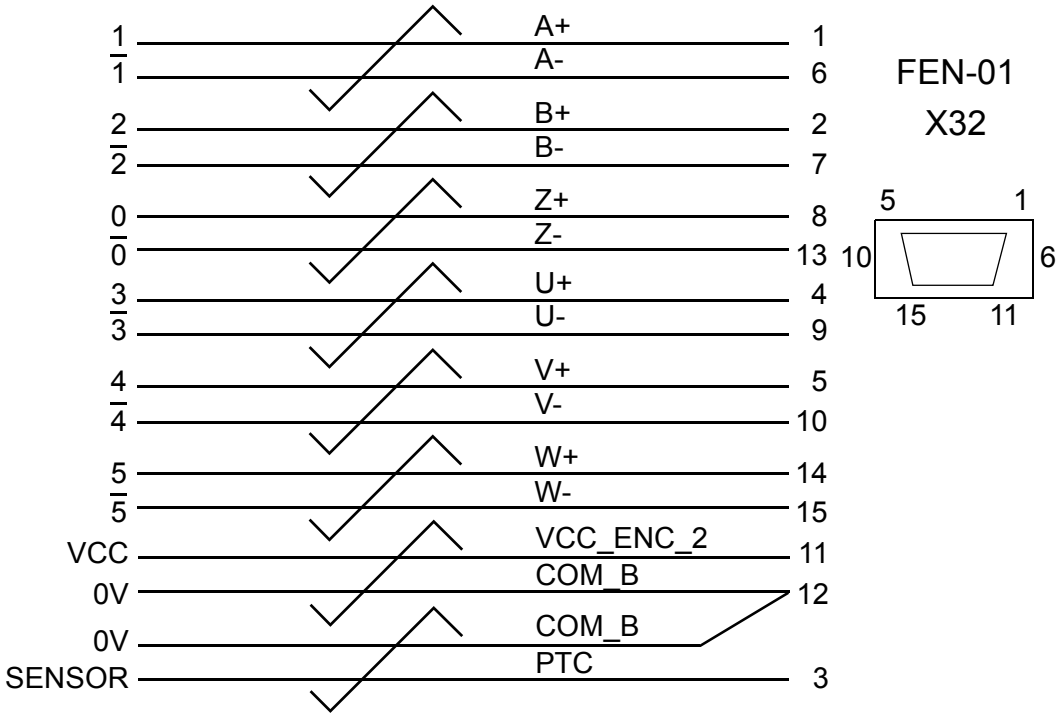

TTL encoder input with commutation signal support (X32)

TTL Emulation output (X33)

The cable should have 4 cable pairs.

Cable pair number	Signals name	X31 connecting plug pin number (9-pins)	Notes
1	EM_A+	1	
	EM_A-	6	
2	EM_B+	2	
	EM_B-	7	
3	EM_Z+	3	
	EM_Z-	8	
4	COM_B	4	
	COM_B	9	

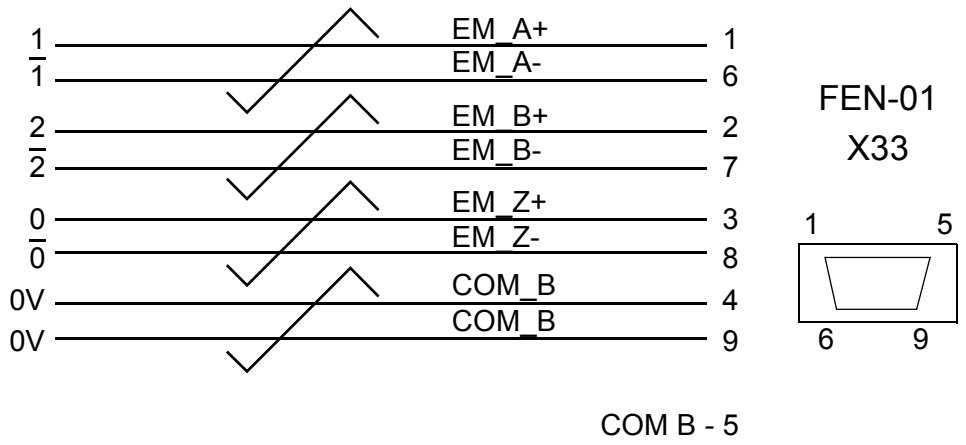

TTL Emulation output (X33)

Digital inputs for position latching (X34)

Cable pair number	Signals name	X34 connecting header pin number (6-pins)	Notes
1	+24V_C	1	
	COM_C	2	
2	DI_1+	3	
	DI_1-	4	
3	DI_2+	5	
	DI_2-	6	

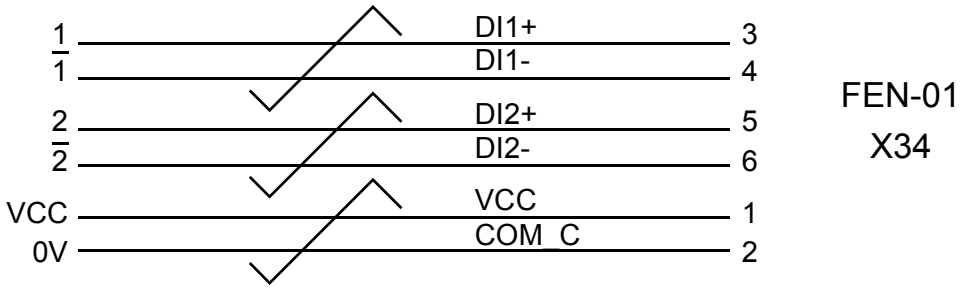

Digital inputs for position latching (X34)

Note: Do not route the encoder cables parallel to power (e.g. motor) cables.

Phasing

When the encoder is connected correctly, running the drive in the *Forward* (positive speed reference) direction should produce a positive encoder speed feedback.

On incremental encoders, the two output channels, usually marked 1 and 2 or A and B, are 90° (electrical) apart from each other. When rotated clockwise, most encoders – but not all – have channel 1 leading channel 2 as illustrated below. Determine the leading channel by referring to the encoder documentation or by measuring with an oscilloscope.

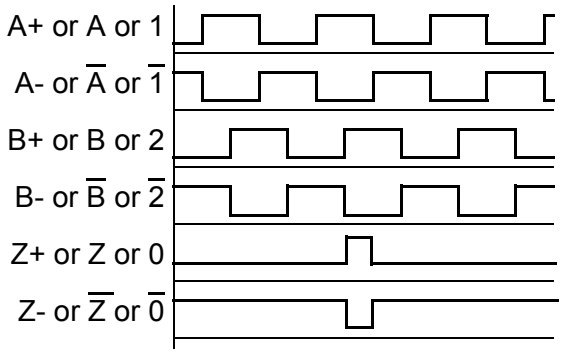

The encoder output channel that leads when the drive runs *Forward* should be connected to FEN-01 input A, the output channel that trails to FEN-01 input B.

The zero reference output channel (usually marked 0, N or Z) needs to be connected in positioning applications only.

Programming

The FEN-01 is programmed through drive parameters. These parameters must be checked and adjusted according to the encoder data sheet. For further information, see the drive *Firmware Manual*.

Fault tracing

Diagnostic LEDs

The FEN-01 is equipped with two diagnostic LEDs. The STATUS LED describes the status of the FEN-01 and the ENC ST LED the status of the encoders. Description of the LED signals is presented below.

	Colour	Description
STATUS LED	Green	OK
	Orange	Not initialized or communication fault to control unit
	Red	Not in use
ENC ST LED	Green	Encoder(s) OK
	Red	TTL encoder (X31) fault
	Orange	TTL+ encoder (X32) fault
	Red / orange swapping	TTL encoder fault X31 & TTL+ encoder X32 fault
	Red flashing	TTL encoder (X31) warning
	Orange flashing	TTL+ encoder (X32) warning

Technical data

Dimensions:

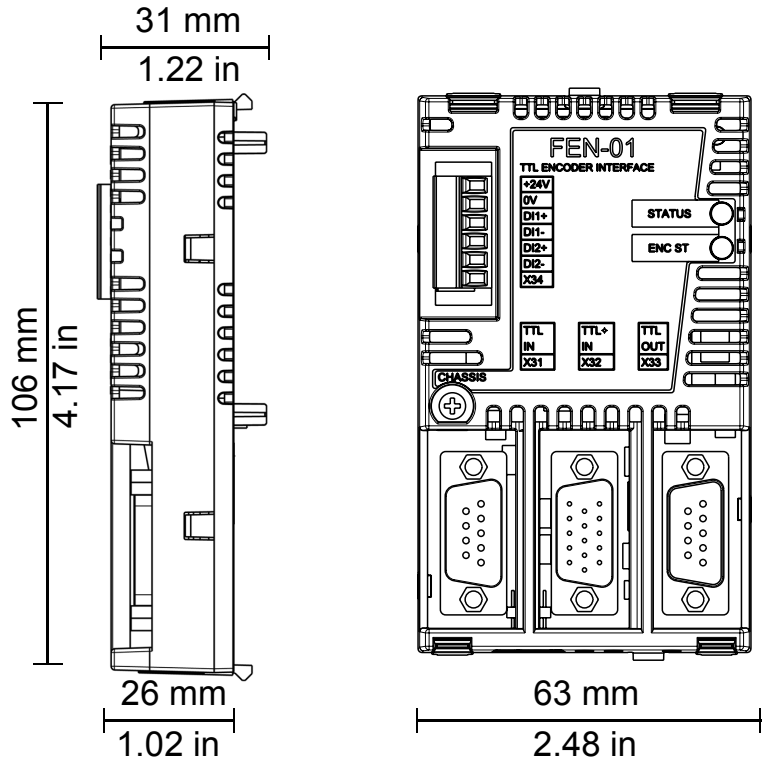

General

- Max. power consumption: 350 mA at 24 V (Max. combined power consumption of encoders, latches and cabling 5W)
- Degree of protection: IP20
- Ambient conditions: The applicable ambient conditions specified for the drive in its *Hardware Manual* are in effect.

Connectors:

- 20-pin socket
- 9-pin D-sub socket
- 15-pin D-sub socket
- 9-pin D-sub plug

- 6-pin header

TTL encoder input (X31)

- Output voltages:
  - +5.5 V DC -5%, -8%, 180 mA
  - +24 V DC ±15%, 150 mA together with digital inputs
  - +5.5 V and +24 V combined maximum power is 3.6 W
- CH A, CH B, CH Z: RS-422/485, differential, 500 kHz (max)
- Maximum cable length:
  - 30 m with a 5 V encoder (0.5 mm^2 cable for power supply)
  - 60 m with a 5 V encoder (two parallel 0.5 mm^2 cables for power supply)
  - 100 m with a 10…30 V TTL incremental encoder
- Performance:
  - Speed range: -32768…32767 rpm
  - Speed resolution: 0.04 RPM (24 bits)
  - Position resolution: 16 M / rev (24 bits)
  - Position accuracy: 4x pulse count / rev
- Isolated together with digital inputs

TTL encoder input with commutation support (X32)

- Output voltages:
  - +5.5 V DC +2.5%, -1%, 200 mA
  - +24 V DC ±15%, 150 mA
- PTC thermistor input
- CH A, CH B, CH Z, CH U, CH V, CH W: RS-422/485, differential, 500 kHz (max)
- Maximum cable length:
  - 30 m with a 5 V encoder (0.5 mm^2 cable for power supply)
  - 60 m with a 5 V encoder (two parallel 0.5 mm^2 cables for power supply)
  - 100 m with a 10…30 V TTL encoder

- Performance:
  - Speed range: -32768…32767 rpm
  - Speed resolution: 0.04 RPM (24 bits)
  - Position resolution: 16 M / rev (24 bits)
  - Position accuracy: 4x pulse count / rev
- Isolated together with TTL encoder emulation output

TTL encoder emulation output (X33)

- Supports emulation of TTL incremental encoder, 1…65535 pulses / rev, reference mark
- CH A, CH B, CH Z: RS-422/485, 500 kHz (max)
- Maximum cable length: 100 m
- Performance
  - Speed range: -32768…32767 rpm
  - Position resolution: 4x pulse count / rev
- Isolated together with TTL encoder input X32

Digital inputs for position latch (X34)

- Output voltage: +24 V DC ±15%, short-circuit proof
- Signal levels: < 5 V = 0, > 15 V = 1
- Isolated together with TTL encoder input

3AFE68784603 Rev C EN
EFFECTIVE: 20.04.2007

ABB Oy
AC Drives
P.O. Box 184
FIN-00381 HELSINKI
FINLAND
Telephone +358 10 22 11
Telefax +358 10 22 22681
Internet http://www.abb.com

ABB Inc.
Automation Technologies
Drives & Motors
16250 West Glendale Drive
New Berlin, WI 53151
USA
Telephone 262 785-3200
800-HELP-365
Telefax 262 780-5135

ABB Beijing Drive Systems Co. Ltd.
No. 1, Block D,
A-10 Jiuxianqiao Beilu
Chaoyang District
Beijing, P.R. China, 100015
Telephone +86 10 5821 7788
Fax +86 10 5821 7618