ABB Drives

User's Manual
Pulse Encoder Interface Module
MTAC-01

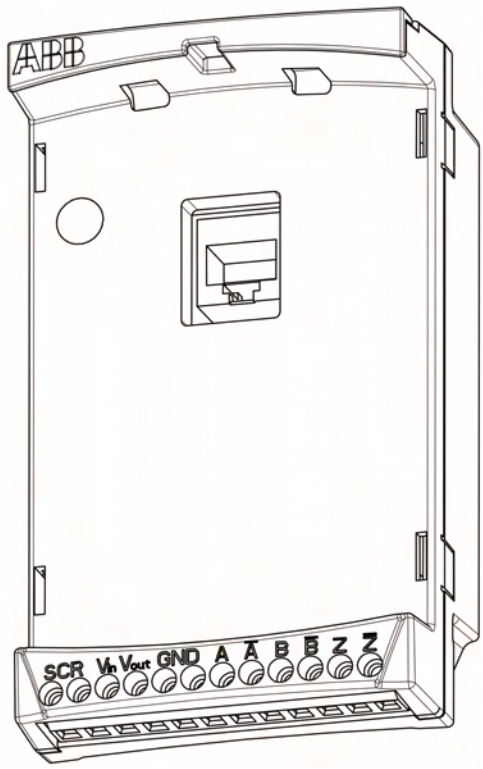

Pulse Encoder Interface Module
MTAC-01

User's Manual

3AFE68591091 REV B
EN
EFFECTIVE: 04.04.2006

© 2006 ABB Oy. All Rights Reserved.

Safety

Overview

This chapter states the general safety instructions that must be followed when installing and operating the MTAC-01 Pulse Encoder Interface module.

The material in this chapter must be studied before attempting any work on, or with, the unit.

In addition to the safety instructions given below, read the complete safety instructions of the specific drive you are working on.

General safety instructions

WARNING! All electrical installation and maintenance work on the drive should be carried out by qualified electricians.

The drive and adjoining equipment must be properly grounded.

Do not attempt any work on a powered drive. After switching off the input power, always allow the intermediate circuit capacitors 5 minutes to discharge before working on the drive, the motor or the motor cable. It is good practice to check (with a voltage indicating instrument) that the drive is in fact discharged before beginning work.

The motor cable terminals of the drive are at a dangerously high voltage when input power is applied, regardless of motor operation.

There can be dangerous voltages inside the drive from external control circuits even when the drive input power is shut off. Exercise appropriate care when working on the unit. Neglecting these instructions can cause physical injury or death.

Table of contents

Safety ***5***

Overview 5
General safety instructions 5

Table of contents. ***7***

Installation ***9***

Preparing for installation 9
Installing the module 10

Start-up ***20***

Configuration 20
01 OPERATING DATA 20
50 ENCODER 21
19 TIMER & COUNTER 22

Diagnostics ***23***

Faults/Alarms 23

Technical data ***24***

Installation

Preparing for installation

MTAC-01 module

The MTAC-01 Pulse Encoder Interface module is an interface for connecting a digital pulse encoder to an ACS350 drive. A pulse encoder should be used if accurate speed or position (angle) feedback from the motor shaft is required.

Module layout

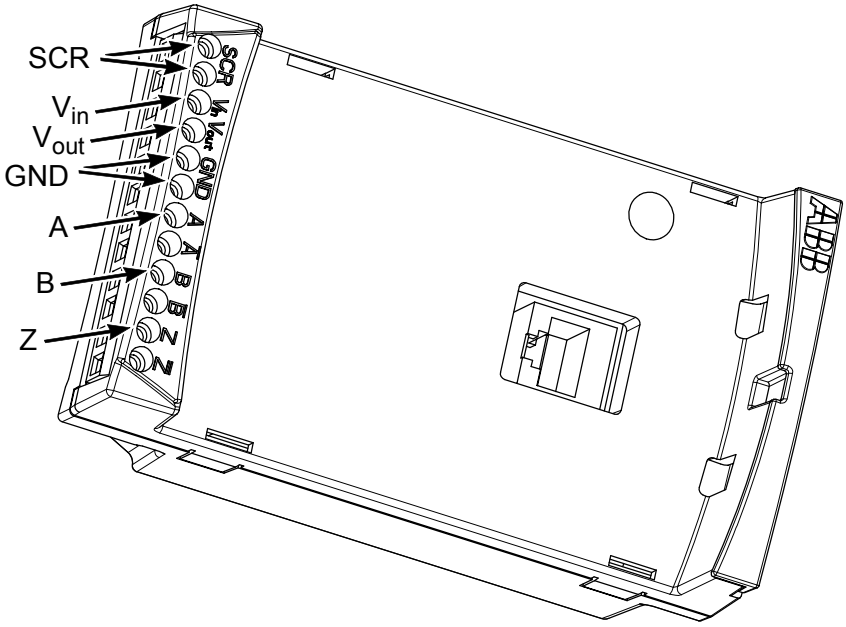

Compatibility

The MTAC-01 module is compatible with all ACS350 drives. To confirm compatibility with a particular pulse encoder, compare the pulse encoder requirements to *Specifications* on page *25*.

Installing the module

Delivery check

The MTAC-01 module package contains:

- MTAC-01 module
- grounding stand-off
- panel port adapter
- this manual.

Mounting

WARNING! Follow the safety instructions given in this manual and in the *ACS350 User's Manual* [3AFE68462401 (English)].

To mount the MTAC-01 module:

1. If not already off, disconnect the input power from the drive. After disconnecting the input power, wait for 5 five minutes before you start working on the drive.
2. Remove the possible control panel or panel cover from the drive.
3. Remove the grounding screw in the top left corner of the drive's control panel slot and install the grounding stand-off in its place.
4. Ensure that the panel port adapter is attached to either the panel port of the drive or the mate part of the MTAC-01 module.
5. Gently and firmly install the MTAC-01 module to the drive's panel slot directly from the front.

Note: Signal and power connections to the drive are automatically made through a 6-pin connector.

6. Ground the module by inserting the screw removed from the drive in the top left corner of the MTAC-01 module. Tighten the screw.

Note: Correct insertion and tightening of the screw is essential for fulfilling the EMC requirements and proper operation of the module.

7. Install the possible control panel or panel cover on the MTAC-01 module.

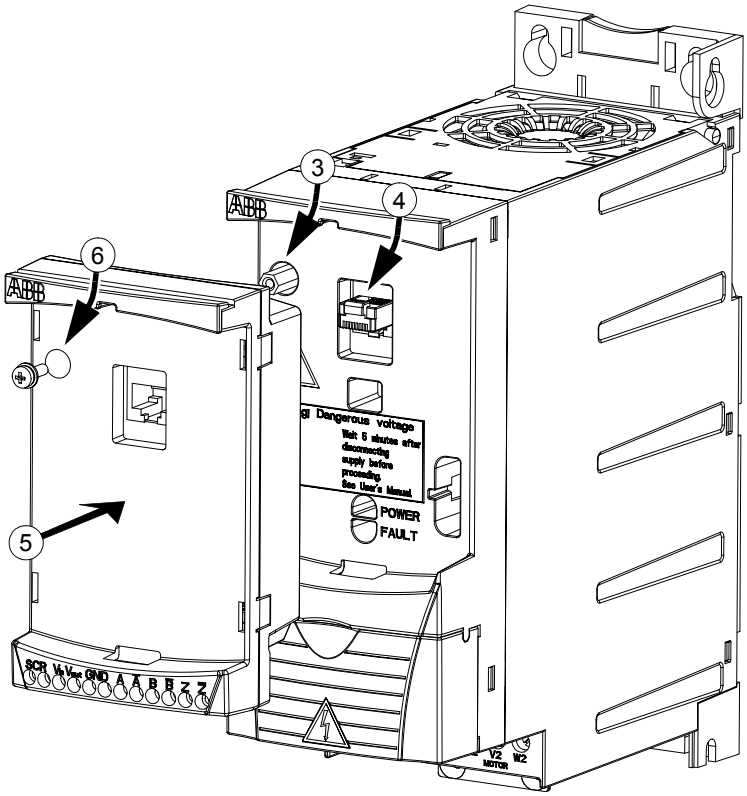

Wiring – General

The pulse encoder should be connected to the MTAC-01 module with cables as specified below.

Cable construction	4 × (2+1) twisted pair cable with individual and overall shields	
Conductor cross-sectional area	0.5 to 1.5 mm^2	20 to 16 AWG
Maximum cable length	100 m	330 ft

Terminal designations

Use the following table for reference when wiring terminals.

<table>
<tr><th colspan="4">Identification</th><th rowspan="2">Description</th></tr>
<tr><th>MTAC</th><th colspan="3">Encoder</th></tr>
<tr><td>SCR</td><td colspan="3" rowspan="2">SCR/ Shield</td><td rowspan="2">Used for grounding of the encoder cable shields. Connected internally to the drive ground.</td></tr>
<tr><td>SCR</td></tr>
<tr><td>V_{in}</td><td colspan="3">V_{cc}/PWR</td><td>Connected to the external power supply.</td></tr>
<tr><td>V_{out}</td><td colspan="3">V_{cc}/PWR</td><td>Connected to the encoder.</td></tr>
<tr><td>GND</td><td colspan="3" rowspan="2">0 V / GND</td><td rowspan="2">One connected to the ground of the external power supply and the other to the ground of the encoder.</td></tr>
<tr><td>GND</td></tr>
<tr><td>A</td><td>1</td><td>A</td><td>A+</td><td rowspan="6">• Max. signal frequency: 200 kHz
• Signal levels:
<table><tr><th></th><th>Logic “1”</th><th>Logic “0”</th></tr><tr><td>24 V</td><td>12.1 V</td><td>8.3 V</td></tr><tr><td>15 V</td><td>7.5 V</td><td>5.3 V</td></tr><tr><td>5 V</td><td>2.5 V</td><td>1.9 V</td></tr></table>• Decision levels are automatically defined based on the daisy chained power supply voltage level.
• Input channels are isolated from the logic and ground.
• When the drive runs in the Forward direction, channel A should lead channel B by 90° (electrical).
• Channel Z: One pulse per revolution (used in positioning applications only).</td></tr>
<tr><td>$\overline{A}$</td><td>$\overline{1}$</td><td>$\overline{A}$</td><td>A-</td></tr>
<tr><td>B</td><td>2</td><td>B</td><td>B+</td></tr>
<tr><td>$\overline{B}$</td><td>$\overline{2}$</td><td>$\overline{B}$</td><td>B-</td></tr>
<tr><td>Z</td><td>3</td><td>Z</td><td>Z+</td></tr>
<tr><td>$\overline{Z}$</td><td>$\overline{3}$</td><td>$\overline{Z}$</td><td>Z-</td></tr>
</table>

Wiring – Encoder power

The MTAC-01 module does not supply power for the encoder. An external power supply (as diagrammed below) is recommended. The drive's 24 VDC supply from terminals X1A:9 (+24V) and X1A:10 (GND) can be used if the total draw on the supply does not exceed 200 mA. Use the following table to determine if the drive's supply can be used.

Loads using the drive's 24 VDC supply			mA
Number of digital inputs used (DI1…DI5)		x 15 mA each =	
MTAC-01 =			35
Encoder current requirement =			
Total requirements for any other user connection(s) to drive's 24 VDC =			
Total (must be less than 200 mA) =			

1. Connect as follows:

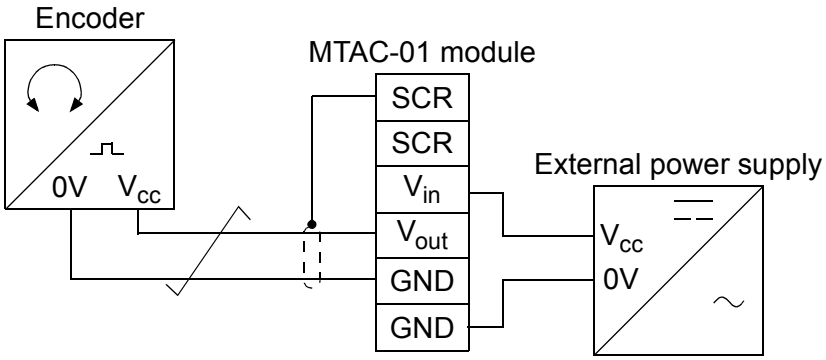

Wiring – Encoder

1. Determine the encoder wiring configuration:

- Refer to *Phasing* on page *14* to determine if the encoder has normal pulse order – encoder channel A/1 pulse leads channel B/2 pulse.
- Refer to *Encoder output types* on page *15* to determine the encoder's output type.
- For push-pull types, refer to the manufacturer's recommendation for connection – either *single-ended* or *differential* can be used.

2. Refer to *Wiring diagrams* on page *16*, select the appropriate diagram, and wire the encoder.

Note: Normally, ground the cable shield only at the drive end. However, if the encoder is isolated from the motor and from the ground, connect the cable shields to both the MTAC module and the encoder housing.

Note: Do not route the encoder cables parallel to power (e.g. motor) cables.

---

3. Verify correct encoder phasing. See options below.

Phasing

When the encoder is connected correctly, running the drive in the *Forward* (positive speed reference) direction should produce a positive encoder speed feedback.

Option A: Oscilloscope test. On incremental encoders, the two output channels, usually marked A and B or 1 and 2, are 90° (electrical) apart from each other. When rotated clockwise, most encoders – but not all – have channel A/1 leading channel B/2 as illustrated below. Determine the leading channel by referring to the encoder documentation or by measuring with an oscilloscope.

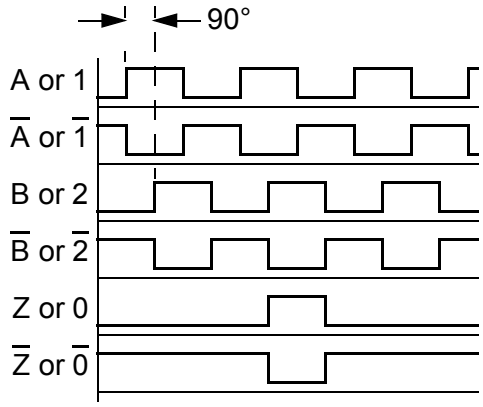

Diagrams show normal phasing: Pulse A/1 leads (i.e. rises earlier than) pulse B/2.

Connect the zero reference output channel (usually marked 0, N or Z) only if parameter *5010* ZPLS ENABLE = 1 (ENABLE).

The encoder output channel that leads when the drive runs *Forward* should be connected to MTAC terminal A. The output channel that trails should be connected to MTAC terminal B.

Option B: Functional test. For this test:

- Temporarily, switch the drive to scalar mode [parameter 9904 MOTOR CTRL MODE = 3 (SCALAR:FREQ)], if not already there.
- Run the drive in the forward direction.
- Verify that parameter *0147* MECH REVS is increasing in the positive direction.
- If not, switch the A/$\overline{A}$ (or 1/$\overline{1}$) connections.

Encoder output types

The following diagrams identify the typical encoder output types.

Push-pull	Open collector (sinking)	Open emitter (sourcing)
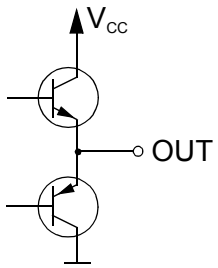	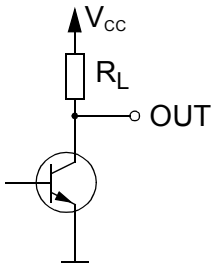	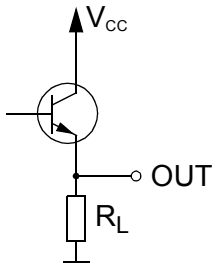
V_{CC} = Encoder input power supply voltage R_L = Load resistor at encoder output channel		

Wiring diagrams

Push-pull type encoder output

Diagram assumes normal pulse order in Forward rotation: Pulse A/1 leads as diagrammed on the right.

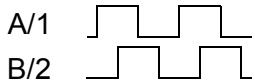

For encoders with pulse 2 leading, change the diagram for these connections:

- Encoder A/1 and B/2 should be wired to MTAC terminals B and A, respectively.
- Encoder $\overline{A}/\overline{1}$ and $\overline{B}/\overline{2}$ (if present) should be wired to MTAC terminals $\overline{B}$ and $\overline{A}$, respectively.

Differential connection

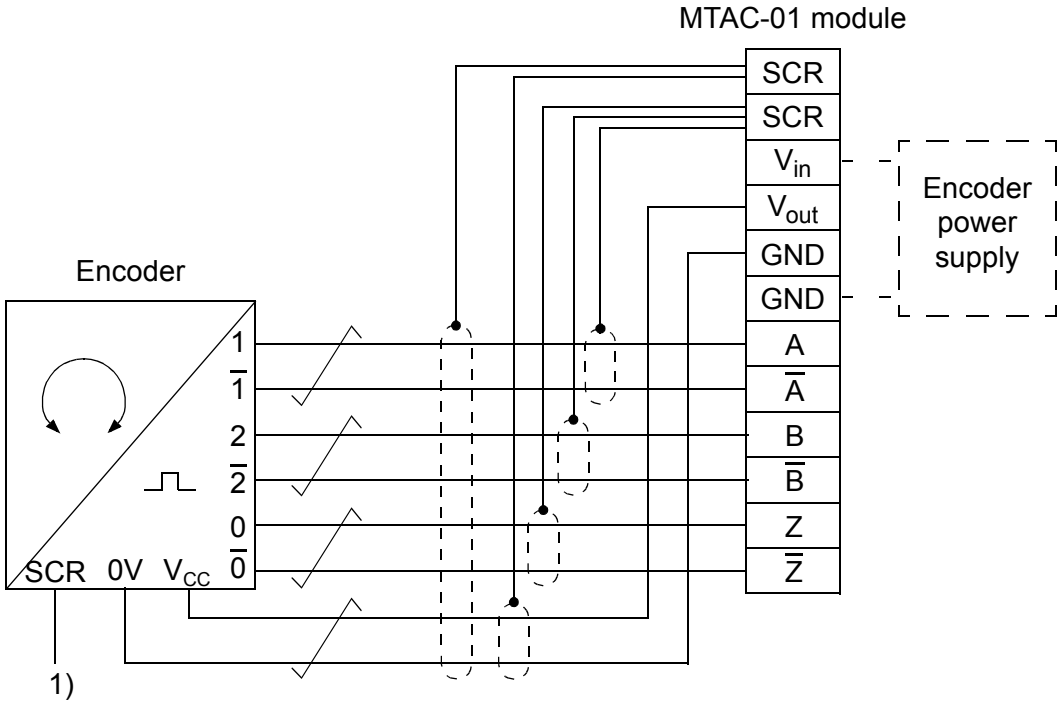

1) Connect the cable shield at the encoder housing, if, and only if, the encoder is isolated from the motor, and from the ground.

Single-ended connection

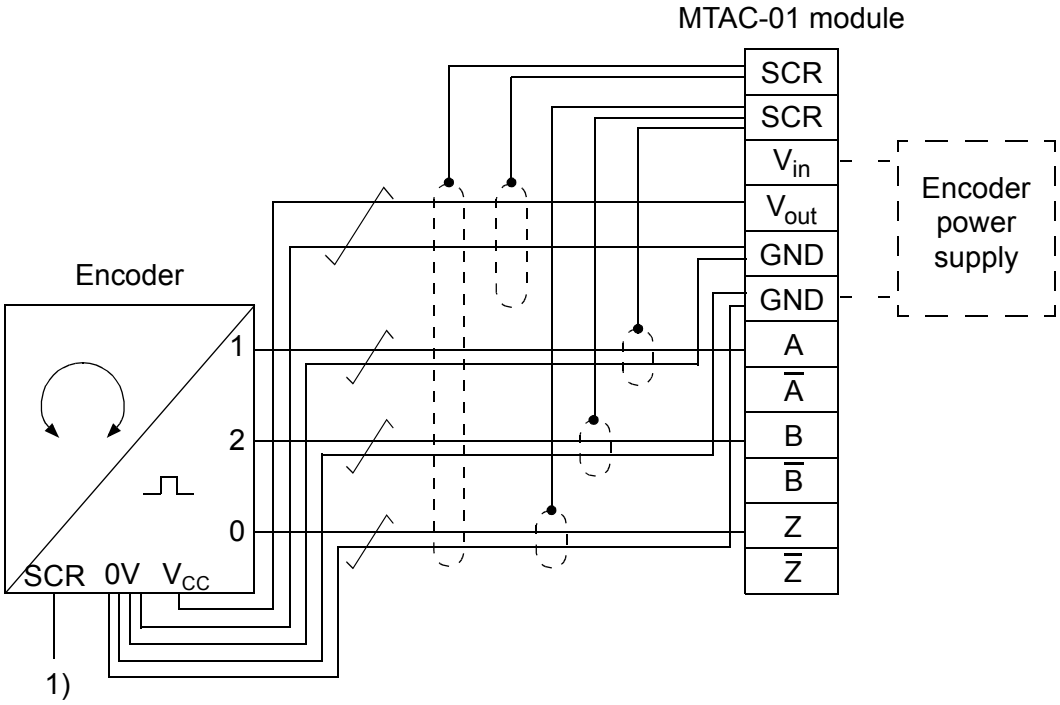

1) Connect the cable shield at the encoder housing, if, and only if, the encoder is isolated from the motor, and from the ground.

Open collector (sinking) encoder output

Diagram assumes normal pulse order in Forward rotation: Pulse A/1 leads as diagrammed on the right.

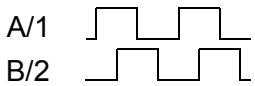

For encoders with pulse B/2 leading, change the diagram for these connections:

- Encoder A/1 and B/2 should be wired to MTAC terminals B and A, respectively.

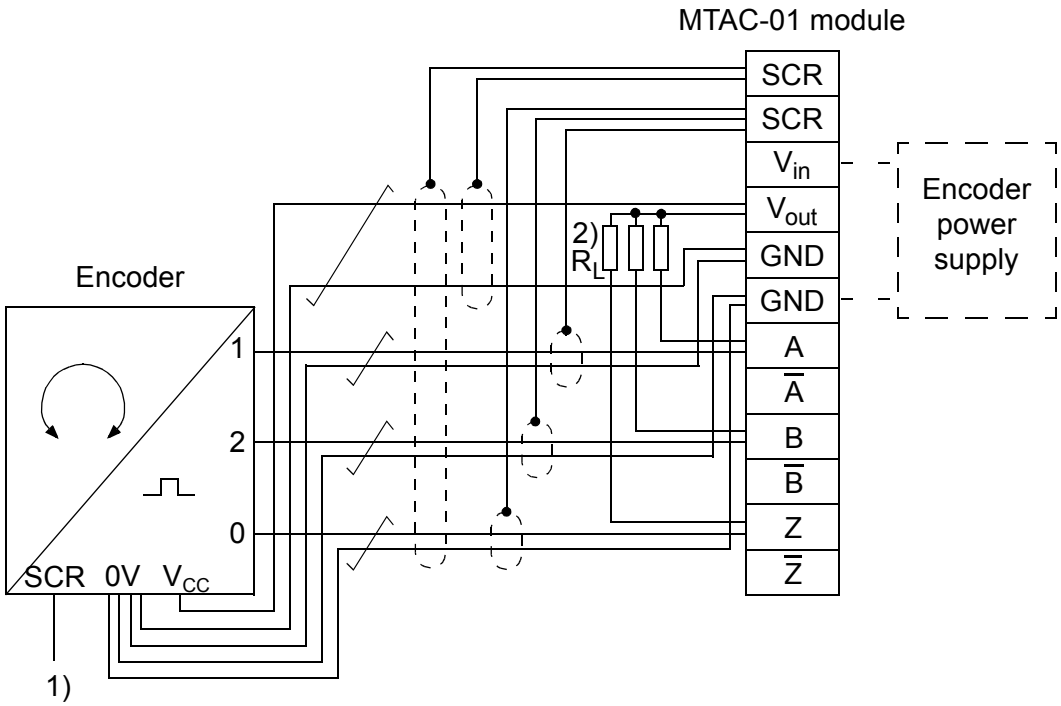

1) Connect the cable shield at the encoder housing, if, and only if, the encoder is isolated from the motor, and from the ground.

2) Three identical resistors whose size depends on the encoder power supply
$V_{in} = V_{out}$:
V_{in} = 30 V: R_L = 2.7…3.0 kohm, 0.5 W
V_{in} = 24 V: R_L = 1.8…2.2 kohm, 0.5 W
V_{in} = 15 V: R_L = 1.0…1.5 kohm, 0.5 W
V_{in} = 5 V: R_L = 390…470 ohm, 0.125 W

Open emitter (sourcing) encoder output

Diagram assumes normal pulse order in Forward rotation: Pulse A/1 leads as diagrammed on the right.

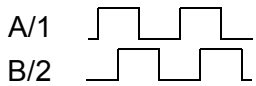

For encoders with pulse B/2 leading, change the diagram for these connections:

- Encoder A/1 and B/2 should be wired to MTAC terminals B and A, respectively.

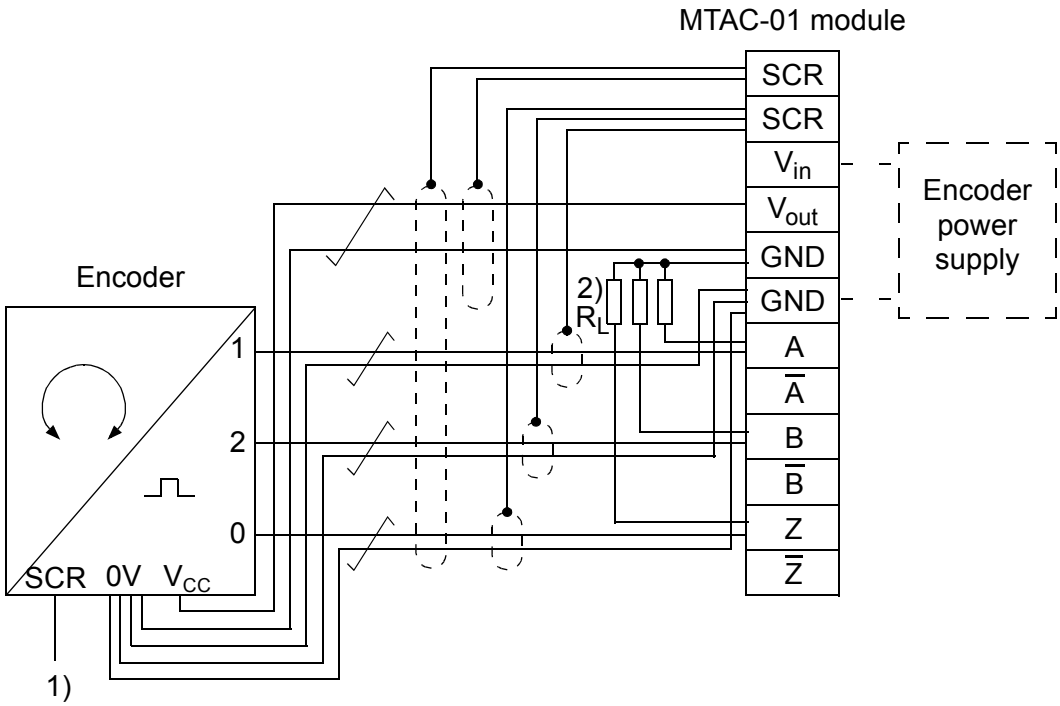

1) Connect the cable shield at the encoder housing, if, and only if, the encoder is isolated from the motor, and from the ground.

2) Three identical resistors whose size depends on the encoder power supply
$V_{in} = V_{out}$:
V_{in} = 30 V: R_L = 2.7…3.0 kohm, 0.5 W
V_{in} = 24 V: R_L = 1.8…2.2 kohm, 0.5 W
V_{in} = 15 V: R_L = 1.0…1.5 kohm, 0.5 W
V_{in} = 5 V: R_L = 390…470 ohm, 0.125 W

Apply power

1. Turn on the input power to the drive.
2. Continue with the next chapter, *Start-up*.

Start-up

Configuration

To configure the operation of the MTAC-01 module:

1. Power up the drive.
2. Use the control panel on the drive or the DriveWindow Light PC tool and set group *50 ENCODER* parameters described on page *21*.

Encoder operating data

The following actual signals, based on measurements or calculations, provide feedback from the encoder. You cannot set these values directly, but you can use group *50 ENCODER* parameters to control the mechanical angle and revolution data.

No.	Name/Value	Description	FbEq [1)]
01 OPERATING DATA			
0146	MECH ANGLE	Calculated mechanical angle	1 = 1
0147	MECH REVS	Mechanical revolutions, i.e. the motor shaft revolutions calculated by the encoder	1 = 1
0148	Z PLS DETECTED	Encoder zero pulse detector. 0 = not detected, 1 = detected	1 = 1

[1)] Fieldbus equivalent, scaling between the value and the integer used in serial communication.

Encoder parameters

This group defines the set-up for encoder use:

- Sets the number of encoder pulses per shaft revolution.
- Enables the encoder operation.
- Defines how the mechanical angle and revolution data is reset.

Index	Name/ Selection	Description	Default FbEq [1]
50 ENCODER			
5001	PULSE NR	States the number of encoder pulses per one revolution.	1024
	32…16384 ppr	Pulse number in pulses per round (ppr)	1 = 1
5002	ENCODER ENABLE	Enables the encoder.	DISABLE
	DISABLE	Disables the encoder.	0
	ENABLE	Enables the encoder.	1
5003	ENCODER FAULT	Defines the operation of the drive if a failure is detected in communication between the pulse encoder and the pulse encoder interface module, or between the module and the drive.	FAULT
	FAULT	The drive trips on fault ENCODER ERROR.	1
	ALARM	The drive generates alarm ENCODER ERROR.	2
5010	Z PLS ENABLE	Enables the encoder zero (Z) pulse. Zero pulse is used for position reset.	DISABLE
	DISABLE	Disables the zero pulse.	0
	ENABLE	Enables the zero pulse.	1
5011	POSITION RESET	Enables the position reset.	DISABLE
	DISABLE	Disables the position reset.	0
	ENABLE	Enables the position reset.	1

[1] Fieldbus equivalent, scaling between the value and the integer used in serial communication.

Counter

The encoder pulses can be used as the signal source for the counter. For more information on the counter function, refer to chapter Program features in *ACS350 User's Manual* [3AFE68462401 (English)].

Index	Name/ Selection	Description	Default FbEq [1)]
19 TIMER & COUNTER			
1906	COUNTER INPUT	Selects the input signal source for the counter.	PLS IN(DI 5)
	PLS IN(DI 5)	Digital input DI5 pulses. When a pulse is detected, the counter value increases by 1.	1
	ENC W/O DIR	Encoder pulse edges. When a rising or a falling edge is detected, the counter value increases by 1.	2
	ENC WITH DIR	Encoder pulse edges. The direction of rotation is taken into account. When a rising or falling edge is detected and the direction of rotation is forward, the counter value increases by 1. When the direction of rotation is reverse, the counter value decreases by 1.	3

[1)] Fieldbus equivalent, scaling between the value and the integer used in serial communication.

Diagnostics

Faults/Alarms

If the ACS350 detects that the encoder signal is lost, the drive operation and the diagnostic message are both controlled by parameter *5003* ENCODER FAULT:

- *5003* = 1 (FAULT) – The drive generates a fault (23 ENCODER ERR), and the motor coasts to a stop.
- *5003* = 2 (ALARM) – The drive generates an alarm (2024 ENCODER ERROR) and operates as if parameter *5002* ENCODER ENABLE = 0 (DISABLE), that is, speed feedback is derived from the internal motor model.

In case of a fault or alarm signal, check for and correct the following:

CODE	FAULT/ALARM [1)]	CAUSE	WHAT TO DO
0023	ENCODER ERR (7301) 0306 bit 6	Communication fault between pulse encoder and pulse encoder interface module or between module and drive.	Check pulse encoder and its wiring, pulse encoder interface module and its wiring and parameter group *50 ENCODER* settings.
2024	ENCODER ERROR (7310) 0309 bit 7		

[1)] Name, code for fieldbus communication (in parentheses) and bit in fault/alarm word.

Note: The validity of the encoder signal is also checked during the ID run. See parameter 9910 MOTOR ID RUN. If the drive detects an encoder problem during the ID run, the drive generates an alarm. Parameter 5003 ENCODER FAULT controls the drive's fault/alarm response to encoder errors only after the ID run is completed.

Technical data

Dimensions

Module dimensions are shown in the figure below.

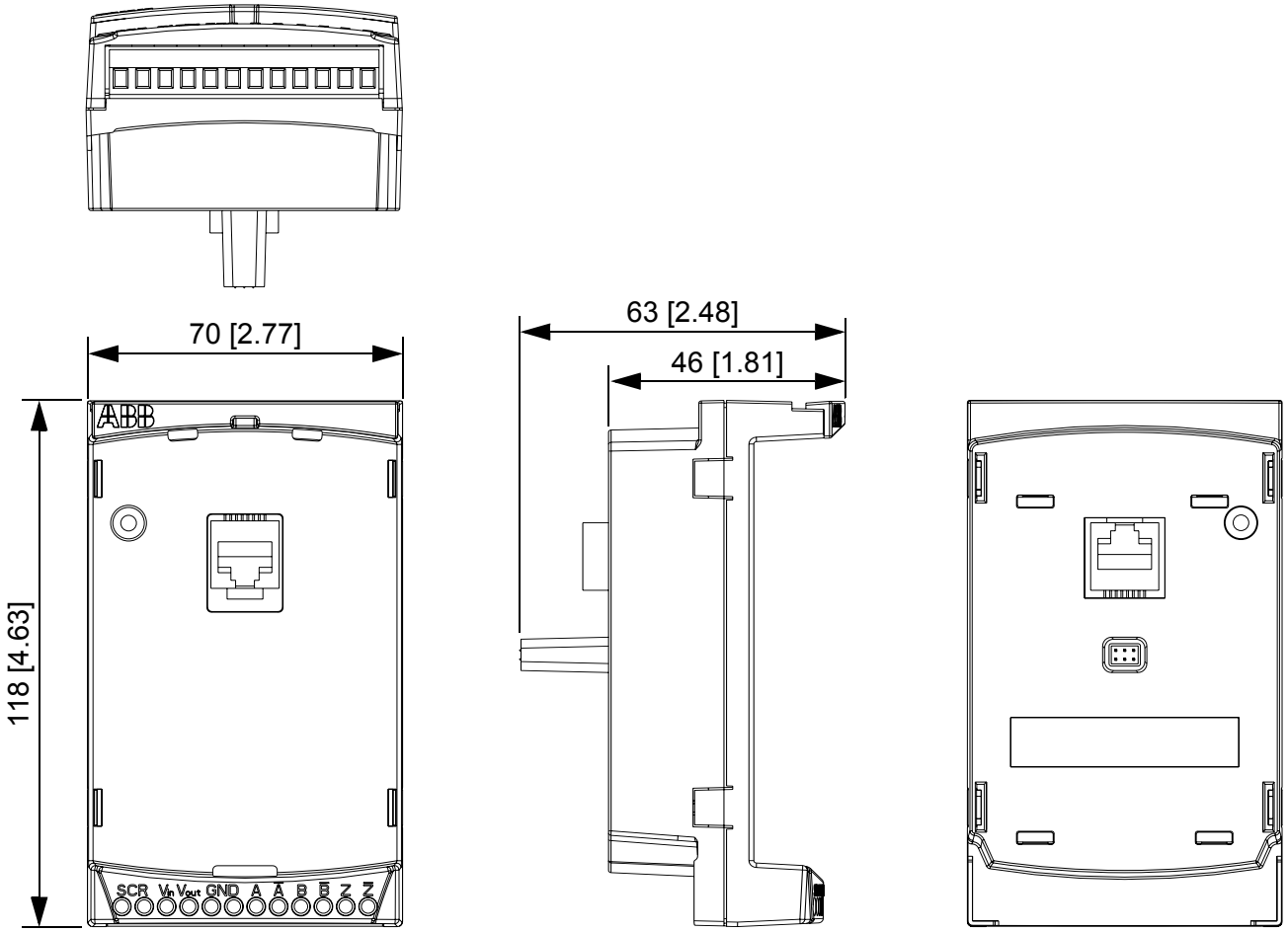

3AFE68580064-A

Degree of protection

The degree of protection of MTAC-01 is IP20 / UL open.

Ambient conditions

Temperature -10…+40°C (14…+104°F). No frost allowed.

Connectors

Connectors on the module:

- one 12-pin screw-type, non-detachable terminal block that accepts wire connectors up to 1.5 mm^2 (16 AWG) for encoder interface
- two RJ-45 connectors for panel pass-through
- 6-pin connector for drive interface
- grounding screw/stand-off for connection of the SCR terminals of the drive and the MTAC-01 module.

Specifications

Module specifications

The MTAC-01 module:

- supports three channels: CH A, CH B, CH Z
- includes pass-through terminals to connect an external power supply (required) to the pulse encoder
- has all of its materials UL-approved.

Channel specifications

Channel specifications:

- differential or single-ended
- maximum input frequency: 200 kHz
- input voltage range (measured at the MTAC module): see *Terminal designations* on page *12*
- nominal input impedance (at 24 VDC): 20 kohm
- isolated from the logic and ground.

ABB Limited
Daresbury Park
Daresbury
Warrington
Cheshire
WA4 4BT
UNITED KINGDOM
Telephone +44 1925 741111
Fax +44 1925 74121

3AFE68591091 REV B / EN
EFFECTIVE: 04.04.2006

ABB Oy
AC Drives
P.O. Box 184
FI-00381 HELSINKI
FINLAND
Telephone +358 10 22 11
Fax +358 10 22 22681
Internet http://www.abb.com

ABB Inc.
Automation Technologies
Drives & Motors
16250 West Glendale Drive
New Berlin, WI 53151
USA
Telephone 262 785-3200
800-HELP-365
Fax 262 780-5135

ABB Beijing Drive Systems Co. Ltd.
No. 1, Block D, A-10 Jiuxianqiao Beilu
Chaoyang District
Beijing, P.R. China, 100015
Telephone +86 10 5821 7788
Fax +86 10 5821 7618
Internet http://www.abb.com