Smarter. Greener. Together.

Industrial Automation Headquarters

Delta Electronics, Inc.
Taoyuan Technology Center
18 Xinglong Road, Taoyuan District,
Taoyuan City 33068, Taiwan
TEL: 886-3-362-6301 / FAX: 886-3-371-6301

Asia

Delta Electronics (Shanghai) Co., Ltd
No.182 Minyu Road, Pudong Shanghai,
People's Republic of China
Post code : 201209
TEL: 86-21-68723988 / FAX: 86-21-6872-3996
Customer Service: 400-820-9595

Delta Electronics (Japan), Inc.
Tokyo Office
2-1-14 Minato-ku Shibadaimon,
Tokyo 105-0012, Japan
TEL: 81-3-5733-1111 / FAX: 81-3-5733-1211

Delta Electronics (Korea), Inc.
1511, Byucksan Digital Valley 6-cha, Gasan-dong,
Geumcheon-gu, Seoul, Korea, 153-704
TEL: 82-2-515-5303 / FAX: 82-2-515-5302

Delta Electronics Int'l (S) Pte Ltd.
4 Kaki Bukit Ave 1, #05-04, Singapore 417939
TEL: 65-6747-5155 / FAX: 65-6744-9228

Delta Electronics (India) Pvt. Ltd.
Plot No 43 Sector 35, HSIIDC
Gurgaon, PIN 122001, Haryana, India
TEL: 91-124-4874900 / FAX : 91-124-4874945

Delta Electronics (Thailand) Public Company Limited
909 Soi 9, Moo 4,Bangpoo Industrial
Estate(Epz) Pattana 1rd., Tambol Phraksa
Amphur Muang, Samutprakarn 10280 Thailand
TEL: 66(0)2-709-2800

Delta Energy Systems Australia Pty Ltd.
Unit 20-21, 45 Normanby rd, Notting Hill Vic 3168, Australia
TEL: 61-3-9543-3720

Americas

Delta Products Corporation (USA)
Raleigh Office
P.O. Box 12173, 5101 Davis Drive,
Research Triangle Park, NC 27709, U.S.A.
TEL: 1-919-767-3800 / FAX: 1-919-767-3969

Delta Greentech (Brasil) S.A.
Sao Paulo Office
Rua Itapeva, 26 - 3° andar Edificio Itapeva One-Bela Vista
01332-000-São Paulo-SP-Brazil
TEL: 55-11-3530-8642 / FAX: 55-11-3530-8640

Delta Electronics Int. Mexico
Mexico Office
Via Dr. Gustavo Baz 2160, La Loma
C.P. 54060, Estado de México
TEL: 52-55-2628-3015

EMEA

Delta Electronics (Netherlands) B.V.
Eindhoven Office
De Witbogt 20, 5652 AG Eindhoven, The Netherlands
TEL: 31 (0) 40-8003800 / FAX: 31 (0) 40-8003898
MAIL: Sales.IA.EMEA@deltaww.com
MAIL: Sales.IA.Benelux@deltaww.com

Delta Energy Systems (France) S.A
ZI du bois Chaland 2 15 rue des Pyrénées,
Lisses 91056 Evry Cedex
MAIL: Sales.IA.France@deltaww.com

Delta Energy Systems (Spain) S.L.
Ctra. De Villaverde a Vallecas, 265 1º Dcha Ed.
Hormigueras – P.I. de Vallecas 28031 Madrid
C/Llul, 321-329 (Edif. CINC) | 22@Barcrelona | 08019 Barcelona
MAIL: Sales.IA.Iberia@deltaww.com

Delta Energy Systems Srl (Italy)
Via Senigallia 18/2 – 20161 Milano (MI)
Piazza Grazioli 18 – 00186 ROMA
MAIL: Sales.IA.Italy@deltaww.com

Delta Energy Systems (Germany) GmbH
Coesterweg 45, D-59494 Soest
MAIL: Sales.IA.DACH@deltaww.com

Delta Energy Systems LLC (CIS)
Vereyskaya Plaza II, office 112 Vereyskaya str.
17 121357 Moscow
MAIL: Sales.IA.RU@deltaww.com

Delta Greentech Ltd. (Turkiye)
Şerifali Mevkii Barbaros Bulvari Söyleşi Sokak
No:19 K:1 Yukari Dudullu 34775 Ümraniye
İstanbul Sarigazi V.D 2740624765
MAIL: Sales.IA.Turkey@delta-emea.com

Delta Energy Systems (AG Dubai BR)
P.O. Box 185668, Gate 7, 3rd Floor, Hamarain Centre,
Dubai, United Arab Emirates
MAIL: Sales.IA.MEA@deltaww.com

*We reserve the right to change the information in this catalogue without prior notice.

DELTA_IA-MDS_REG2000_UM_EN_20180207

Delta Power Regenrative Unit REG2000 Series User Manual

Delta Power Regenerative Unit REG2000 Series User Manual

www.deltaww.com

Smarter. Greener. Together.

Preface

Please read prior to installation for safety.

DANGER	☑ Ensure the power is OFF before wiring or installing the Power Regenerative Unit. ☑ After the AC power is turned off, please do not touch the internal circuits and components until the POWER indicator on the unit (below the digital controller) turns off, as the Power Regenerative Unit will still be charged with a high-voltage current and will be very dangerous. ☑ The components on the internal circuit board of the Power Regenerative Unit are susceptible to damage from electrostatic discharge. Please do not touch the circuit board with bare hands before proper antistatic measures are taken. Unauthorized modification of components or circuits within the Power Regenerative Unit is forbidden. ☑ The Power Regenerative Unit ⏚ must be properly grounded. The 230V series uses Type 3 grounding; the 460V series uses special grounding. ☑ The Power Regenerative Unit and its components should be installed away from heat sources and flammable objects.
CAUTION	☑ The voltage rating of the power system onto which the Power Regenerative Unit is installed must not be higher than 240V for the 230V series (480V for the 460V series), and the current must not be greater than 5000A RMS (10000A RMS for models of 40HP (30kW) or more). ☑ Only a qualified professional electrician shall install, wire, repair and maintain the Power Regenerative Unit. ☑ Even when the Power Regenerative Unit is in standby mode, its main circuit terminals may still carry dangerously high voltage. ☑ If unopened and unused for more than 3 months, the ambient storage temperature must not be higher than 30 ºC. This is due to concerns that the electrolytic capacitors are likely to deteriorate if stored with no power supply at high ambient temperatures. Please do not leave it in a state without power supply for more than one year. ☑ Notes for the disinfection and disinfestation of packaging materials for transportation and installation (including wooden crates, planks, cardboard boxes, etc.): 1. When disinfecting or disinfesting packaging materials, such as crates or cartons, please do not fumigate to avoid damaging internal components. 2. Please use alternative environmental disinfection or disinfestation methods. 3. Permitted high temperature methods: Simply leave the packaging materials at a temperature of over 56 ºC for 30 minutes or more. 4. Fumigation is forbidden, any damage caused by fumigation will not be covered by warranty.

NOTE

- The pictures and corresponding descriptions in this manual will feature the product with the outer casing or safety shields removed or disassembled to better explain the product in detail. As for the actual product in operation, please be sure to correctly install the outer casing and wirings in accordance with the rules and regulations, and operate the product following the instructions in the manual to ensure your safety.
- The illustrations in the manual may slightly differ from the actual product for demonstration purposes, but will not affect the rights and interests of the customer.
- When product documentation is updated or modified, the latest edition can be downloaded from the industrial automation product page on the Delta Electronics website. (http://www.delta.com.tw/industrialautomation/)

Table of Contents

01 Product Overview ……...1-1
02 Checking & Recommendations…….. ……2-1
03 Specifications……. ……...…3-1
04 Wiring……4-1
4-1 Wiring Diagram……..…4-2
4-2 Main Circuit Terminals……...……4-10
4-3 Control Circuit Terminals……4-18
4-4 Display Panel Indicators……..…4-22
05 Optional Accessories……...…5-1
5-1 Digital Keypad……5-2
5-2 USB/RS485 Communication Interface IFD6500, IFD6530……5-6
5-3 Fuse Specification Chart……5-10
5-4 EMC Filter……5-11
5-5 External Power Supply Card (24V) EMC-BPS01……5-19
5-6 Fan Kits ……5-22
06 List of Parameters……6-1
07 Descriptions of Parameter Settings ……7-1
08 Warnings and Error Display Codes……8-1
09 Usage Recommendations and Troubleshooting ……9-1
10 Power Regenerative Unit Selection……...…10-1

Supported Version **Firmware V1.03 and later**

01 Product Overview

Users should follow the steps below before using the product to ensure safety during use.

1）After opening the packaging, first check the product has not been damaged during shipment. Inspect and ensure that the nameplate labels on the product match the ones on the box.

2）Make sure the wiring is suitable for the voltage range of the Power Regenerative Unit. Please follow the instructions in the installation manual when installing the Power Regenerative Unit.

3）When wiring the Power Regenerative Unit, please be aware of the wiring positions of the main circuit terminals "R/L1, S/L2, T/L3, DC+, DC-", and make sure the terminals are wired correctly to prevent any damage.

1-1 Nameplate Description

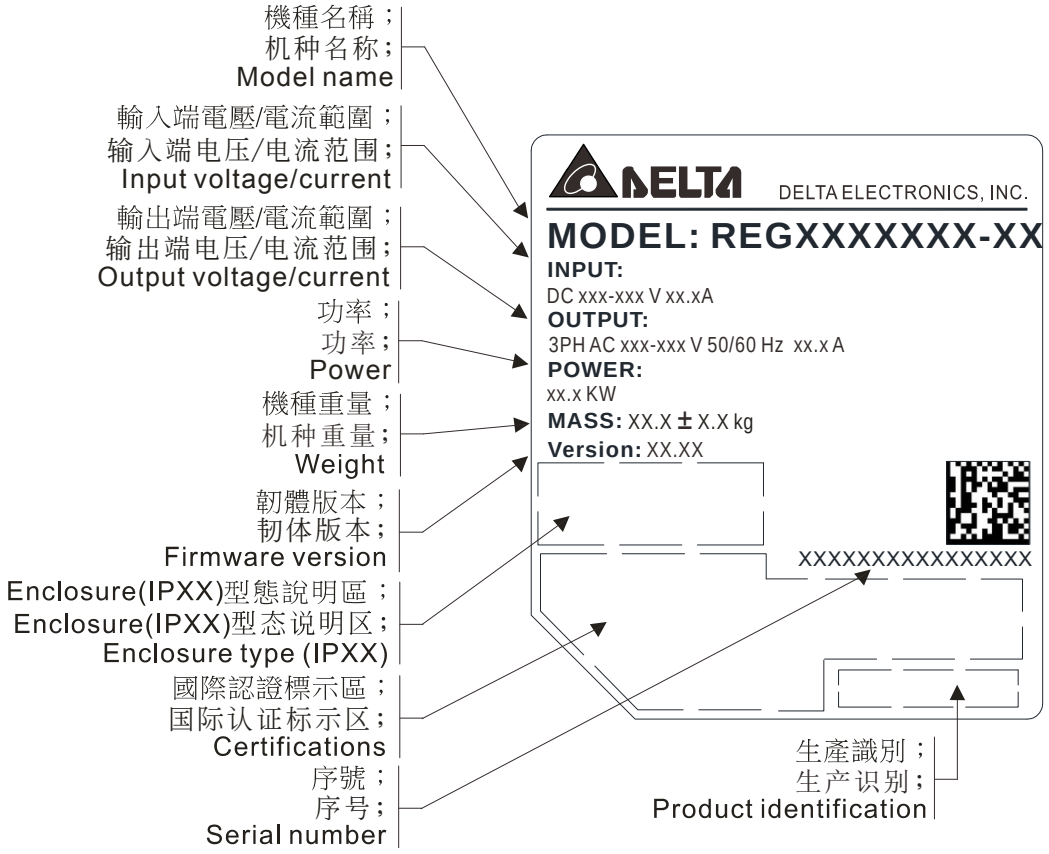

1-2 Model Number Description

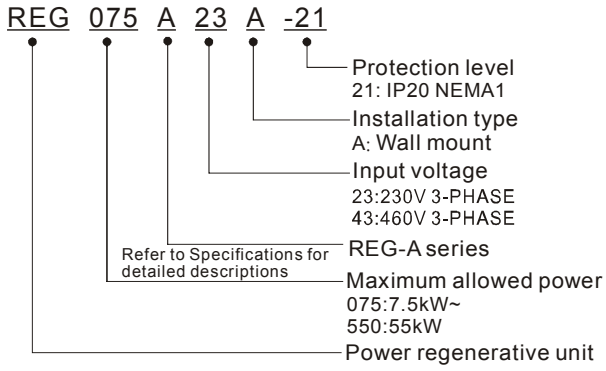

1-3 Serial Number Description

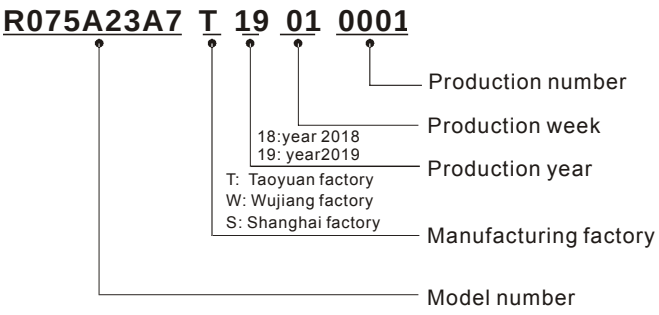

1-4 Apply for After-sales Service by Mobile Device

1-4-1 Location of Service Link Label

Frame A~ C

Remove the display panel and you will find the service link label (service label) which is located on the upper right corner of the case, as below drawing shown:

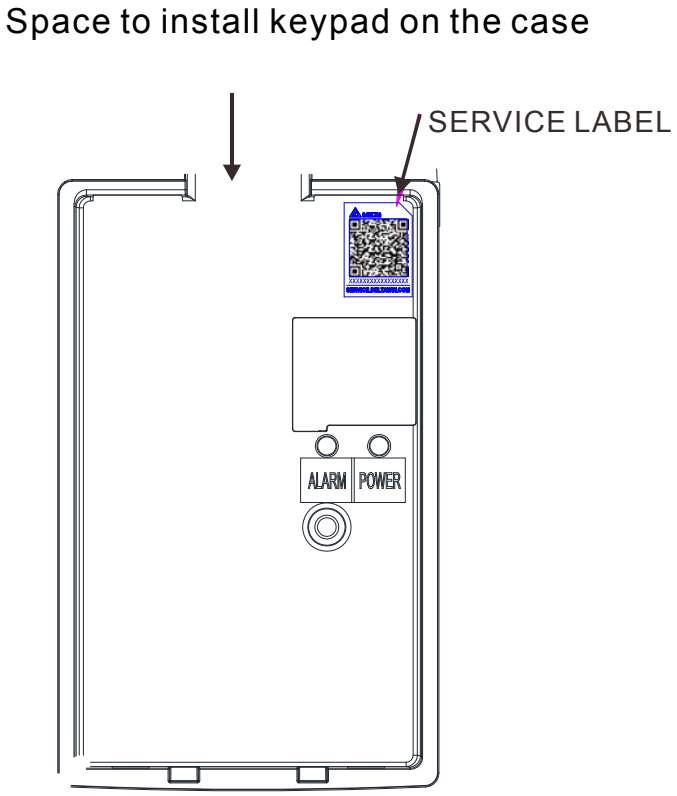

1-4-2 Service Link Label

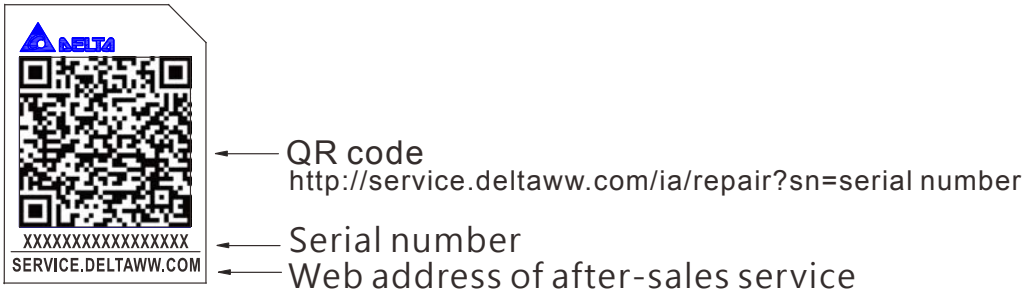

Scan QR Code to apply

1. Find the QR code sticker (as shown above).
2. Run the QR code reader app on your smartphone.
3. Point your camera to the QR Code. Hold your camera steady so that the QR code comes into focus.
4. Access the Delta After-Sales Service website.
5. Fill in the information into the column marked with an orange star.
6. Enter the CAPTCHA and click “Submit” to complete the application.

Cannot find out QR Code?

1. Open a web browser on your computer or smart phone.
2. Key in https://service.deltaww.com/ia/repair in address bar and press enter.
3. Fill in the information into the columns marked with an orange star.
4. Enter the CAPTCHA and click “Submit” to complete the application.

1-5 Operation Principle

In a variable-frequency drive system, due to the high inertia in a drive system, such as centrifuges and washing machines, or applications requiring fast braking, such as machine tool spindles, the motor will be in a power generating state. In other words, because the rotor is being dragged by external forces, the actual motor speed exceeds the inverter-controlled synchronous speed, quickly feeding the energy generated by the motor back to the DC bus, resulting in a rapid rise in the DC bus voltage, thereby endangering the inverter. Therefore, this excess energy must be quickly consumed, to keep the DC bus voltage within a safe range, otherwise the inverter will either malfunction or enter overvoltage protection mode. The traditional method is to convert the excess energy into heat by using a brake resistor. This method has the advantages of simpler wiring and lower total cost, but also has disadvantages of a large brake resistor, requiring additional cooling devices, a limited braking capability, and inefficient use of the energy. On the other hand, the Power Regenerative Unit (REG2000) can convert the power generated by the motor into electric energy, and then return it to the electrical grid for other electrical applications, conserving energy. After the installation the Power Regenerative Unit, the motor's braking capability can also be increased.

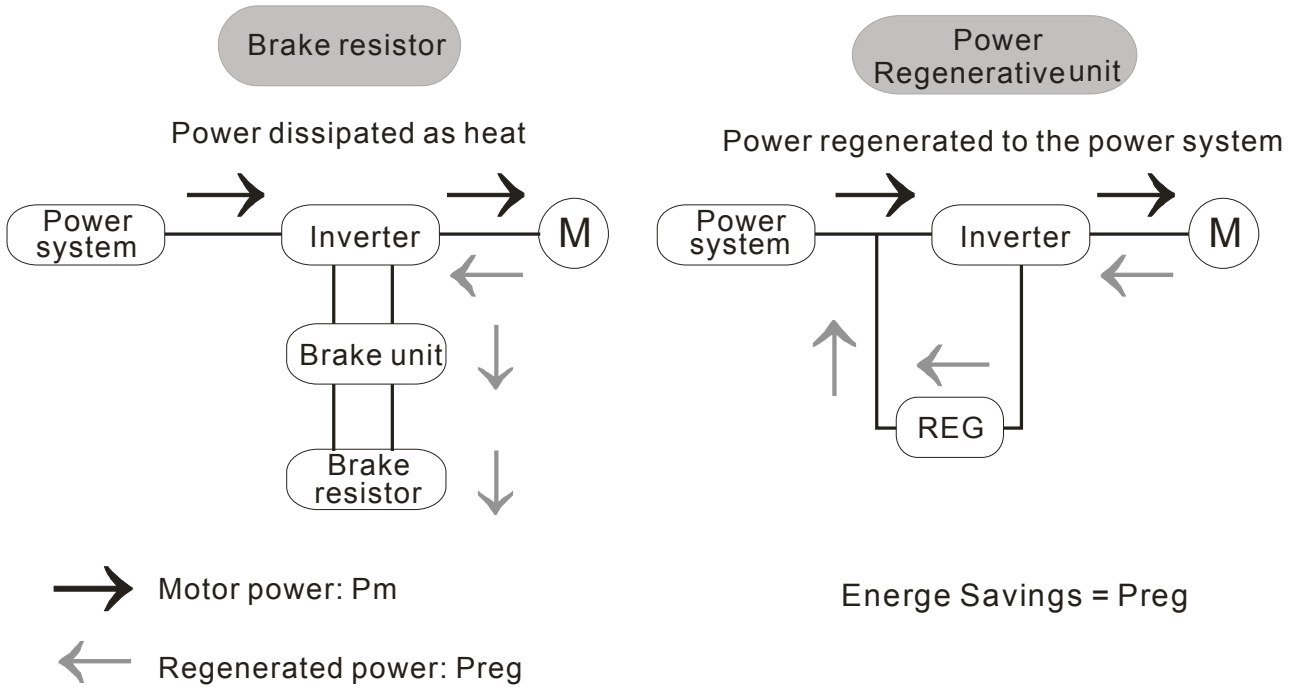

By setting the operating point DC voltage (Pr01-08), the Power Regenerative Unit (REG2000) can decide the regenerative trigger point of DC bus voltage of the motor drive to satisfy regenerative demands in various industrial applications. When the DC bus voltage is higher than the voltage activation level, the Power Regenerative Unit (REG2000) will start the power regeneration. Then the clamping voltage of capacitance will be set as the activation level and the excessive energy generated by the motor will be converted to the 3-phaase AC current to regenerate the mains power (AC).

(1) When the DC bus voltage is lower than the activation voltage level (factory setting value = 10V)
Or
(2) When the output current (A_{AC}) of the power regenerative unit (REG2000) is 10% lower than the rated output current for 1 second.

The power regenerative unit (REG2000) will stop the power regeneration immediately and continue to operate (RUN). The DC bus voltage will trigger the DC-side voltage activation level

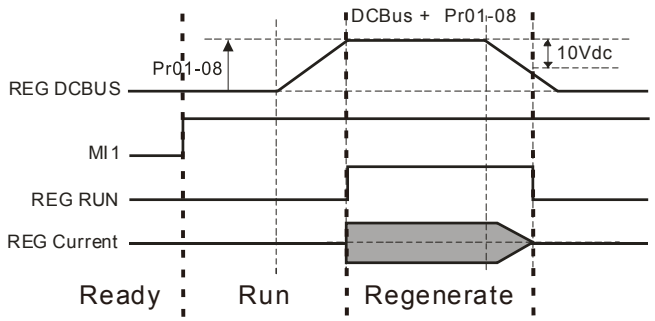

1 The DC bus voltage is lower than the activation voltage level

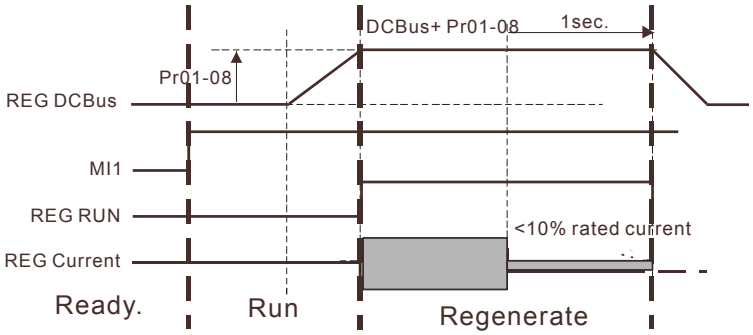

2. The output current (A_{AC}) of the power regenerative unit (REG2000) is 10% lower than the rated output current for 1 second.

The Working Principle of Power Regenerative Unit

1-6 Grounding Short-Circuit Plate Description (RFI Jumper)

RFI: The Power Regenerative Unit generates electrical noise, resulting in frequency interference on the AC power cord (Radio Frequency Interference)

Frame A~C Screw torque: 6~ 8 kg-cm (5.2-6.9 lb -in.)

After loosening the screw, remove the short-circuit plate (MOV-PLATE/ RFI Jumper) as shown in the diagram below). Make sure to tighten the screw back after removing the short-circuit plate. .

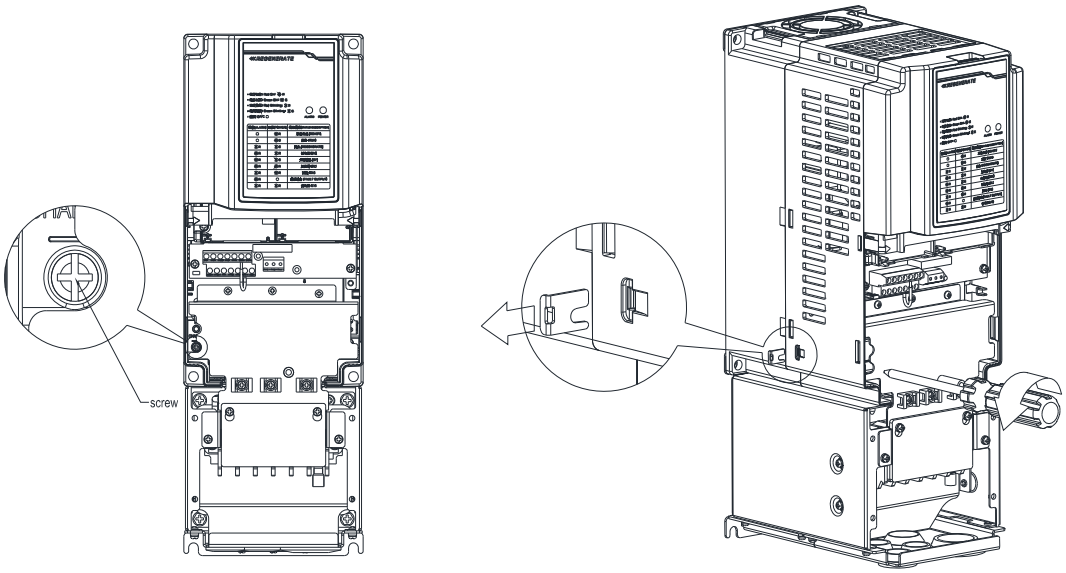

1-6-1 Isolating main power from ground:

When the power distribution system of the Power Regenerative Unit is a floating ground system (IT) or an asymmetric ground system (TN), the RFI short short-circuit plate must be cut off while using Delta's EMC filter. Cutting off the short-circuit plate cuts off the internal RFI capacitor (filter capacitor) between the system's grounding and the central circuits to avoid damaging the central circuits and (according to IEC 61800-3) reduce the ground leakage current.

Important points regarding ground connection

- ☑ To ensure the safety of personnel, proper operation, and to reduce electromagnetic radiation, the Power Regenerative Unit must be properly grounded during installation.
- ☑ The diameter of the cables must meet the size specified by safety regulations.
- ☑ The shielded cable must be connected to the ground of the Power Regenerative Unit to meet safety regulations.
- ☑ The shielded cable can only be used as the ground for equipment when the aforementioned points are met.
- ☑ When installing multiple sets of Power Regenerative Units, do not connect the grounds of the Power Regenerative Units in series. As shown below

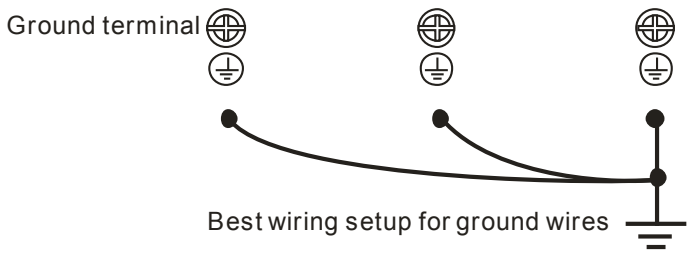

Pay particular attention to the following points:

- ☑ After turning on the main power, do not remove the grounding short-circuit plate while the power is on.
- ☑ Make sure the main power is turned off before removing the grounding short-circuit plate.
- ☑ Removing the grounding short-circuit plate will also cut off the electric conductivity of the capacitor, of the transient voltage surge suppressor and that of the common-mode capacitor. The Power Regenerative Unit will no longer guarantee the electromagnetic compatibility conforming for regulations.
- ☑ The grounding short-circuit plate may not be removed if the main power is a grounded power system.
- ☑ The grounding short-circuit plate may not be removed while conducting high voltage tests. When conducting a high voltage test to the entire facility, the main power and the motor must be disconnected if leakage current is too high.

Floating Ground System (IT Systems)

A floating ground system is also called IT system, ungrounded system, or high impedance/resistance (greater than 30Ω) grounding system.

- ☑ Remove the grounding short-circuit plate to cut off the transient voltage suppressor and the common-mode capacitance connecting to the ground .
- ☑ When installing an external capacitor/ an external EMC filter, a circuit will be formed through the common capacitors' grounding of the capacitor/ EMC filter. That circuit might damage the capacitor and the EMC filter.
- ☑ In the situations where EMC is required, install an EMC filter specially designed for IT Systems. By uninstalling the EMC filter might avoid any damage but might also not conform to EMC regulations.
- ☑ In situations where EMC is required, check whether there is excess electromagnetic radiation affecting nearby low-voltage circuits. In some situations, the adapter and cable naturally provide enough suppression. If in doubt, install an extra electrostatic shielded cable on the power supply side between the main circuit and the control terminals to increase security.

Asymmetric Ground System (Corner Grounded TN Systems)

Caution: Do not remove the grounding I short-circuit cable while the input terminal of the Power Regenerative Unit carries power.

In the following four situations, the grounding short-circuit plate must be removed, because the phase to ground voltage is not symmetrical in the power system. This is to prevent the Power Regenerative Unit from grounding through the grounding short-circuit plate, damaging the Power Regenerative Unit.

Corner Grounded TN Systems: the grounding short-circuit plate must be removed	
1 Grounding at a corner in a triangle configuration 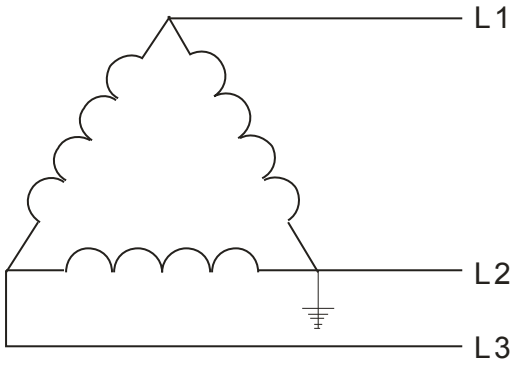 	2 Grounding at a midpoint in a polygonal configuration 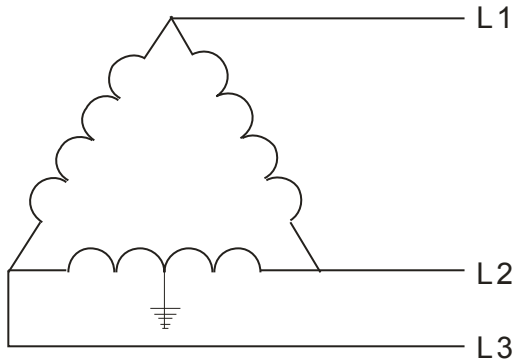
3 Grounding at one end in a single-phase configuration 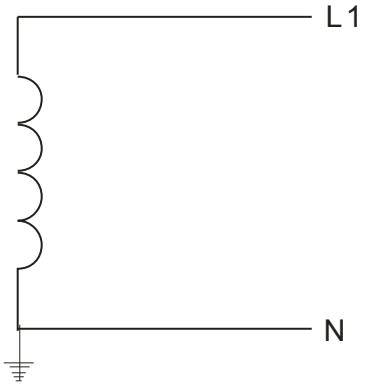 	4 No stable neutral grounding in a three-phase autotransformer configuration 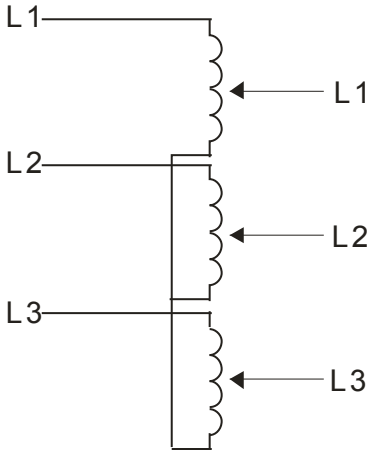
Symmetrical Power System: the grounding short-circuit plate can be used	
Connecting a symmetrical grounding power system to a grounding short-circuit plate to maintain the efficiency of the transient voltage surge suppressor. As a reference, the diagram on the right is a symmetrical grounding power system	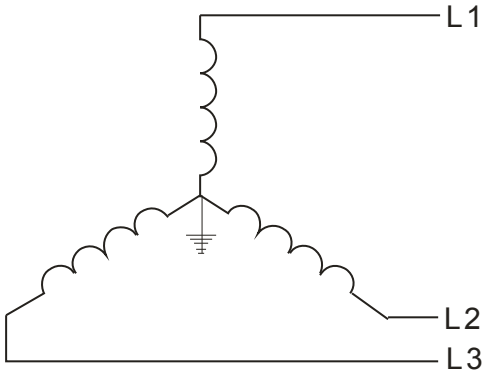

1-7 Dimensions

Frame A

REG075A23A-21; REG110A23A-21; REG075A43A-21; REG110A43A-21; REG150A43A-21;

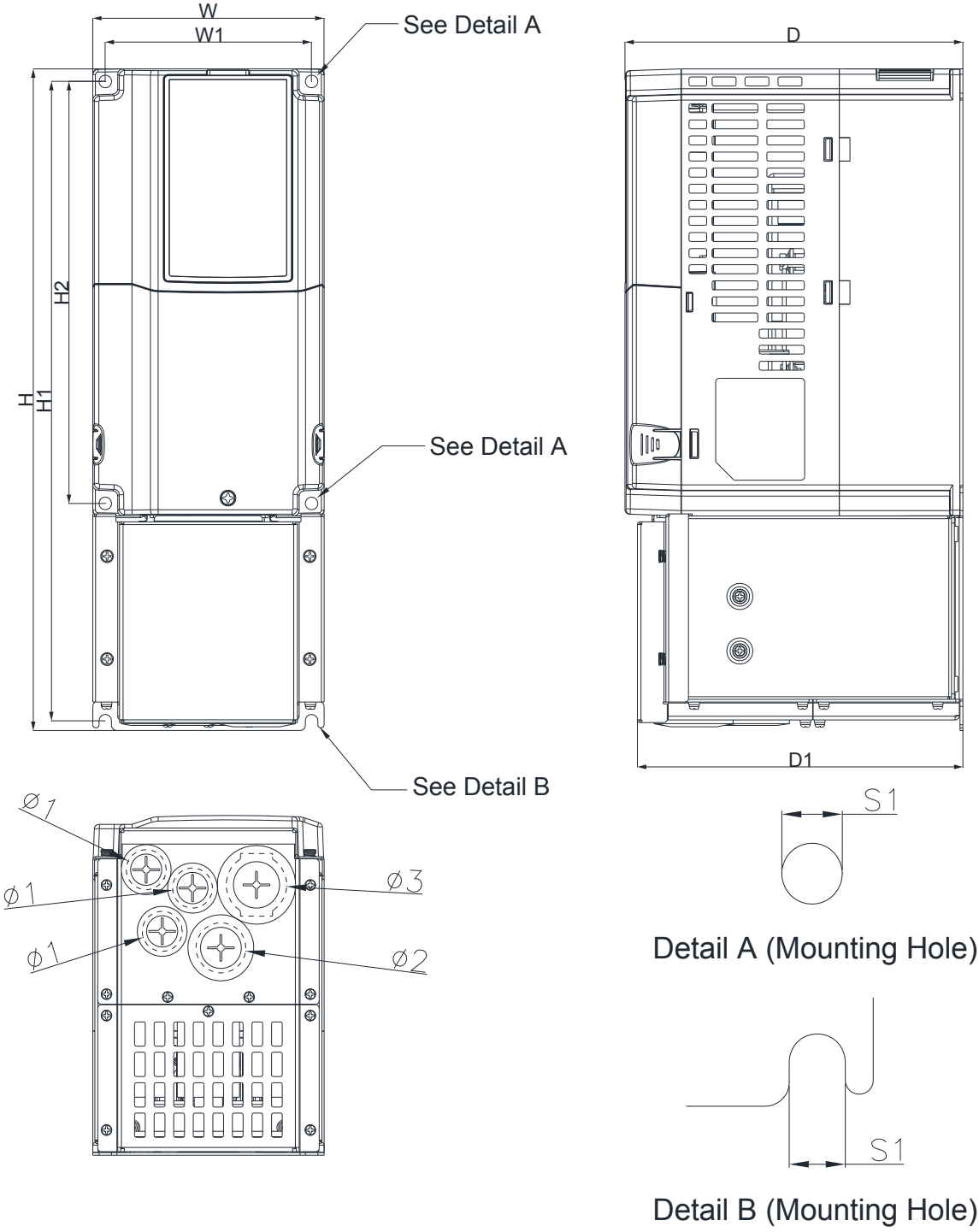

Unit: mm [inch]

Frame	W	H	D	W1	H1	H2	D1	S1	Φ1	Φ2	Φ3
A1	130.0 [5.12]	370.0 [14.56]	190.0 [7.48]	116.0 [4.57]	357.5 [14.07]	236.0 [9.29]	183.0 [7.20]	7.0 [0.28]	22.2 [0.87]	28.0 [1.10]	34.0 [1.34]

Frame B

REG150A23A-21; REG185A23A-21; REG220A23A-21; REG185A43A-21; REG220A43A-21; REG300A43A-21;

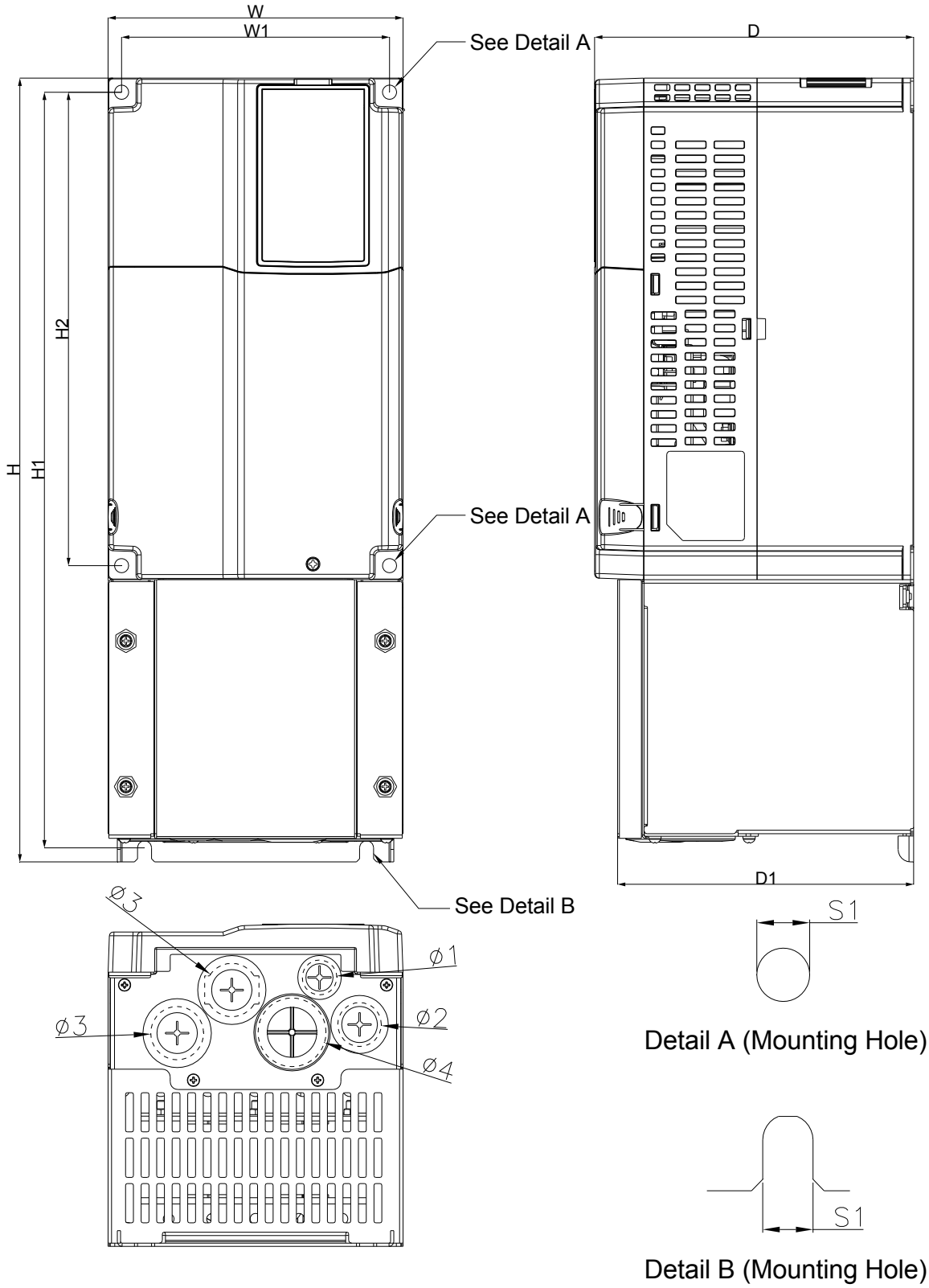

Unit: mm [inch]

Frame	W	H	D	W1	H1	H2	D1	S1	Φ1	Φ2	Φ3	Φ4
B1	190.0 [7.48]	500.0 [19.68]	205.0 [8.09]	172.5 [6.79]	482.0 [18.98]	302.0 [11.89]	190.5 [7.50]	9.0 [0.35]	22.2 [0.87]	28.0 [1.10]	34.0 [1.34]	43.8 [1.72]

Frame C

REG300A23A-21; REG370A23A-21; REG370A43A-21; REG450A43A-21; REG550A43A-21;

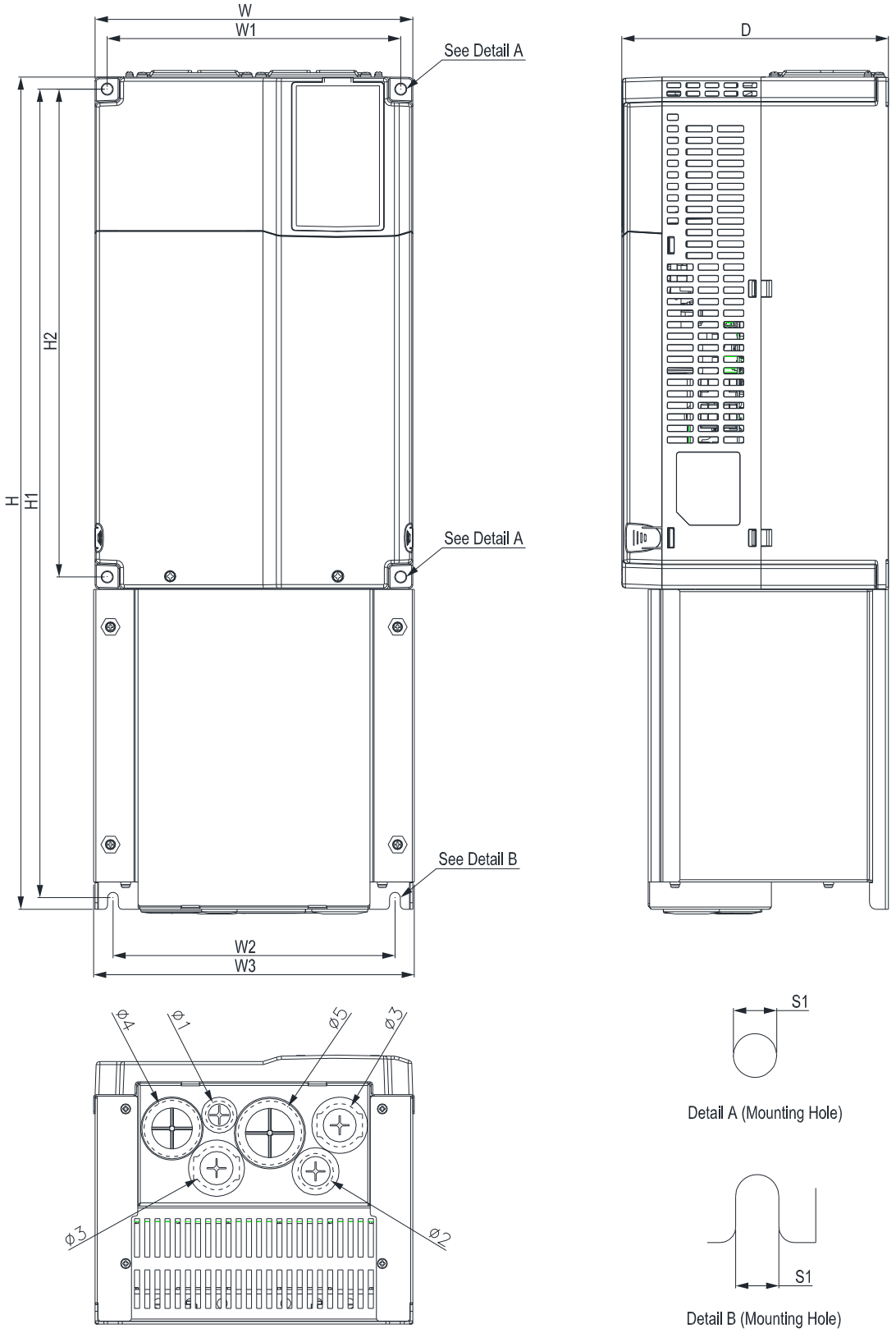

Unit: mm [inch]

Frame	W	H	D	W1	W2	W3	H1	H2	S1	Φ1	Φ2	Φ3	Φ4	Φ5
C1	250.0 [9.84]	650.0 [25.59]	210.0 [8.27]	231.0 [9.09]	220.0 [8.74]	252.5 [9.94]	631.5 [24.86]	381.0 [15.00]	8.5 [0.33]	22.2 [0.87]	28.0 [1.10]	34.0 [1.34]	44.0 [1.73]	50.1 [1.97]

02 Checking & Recommendations

Setup Distances & Wiring Description

NOTE

- ☑ Please make sure that this product is installed upright.
- ☑ Do not allow foreign materials such as fibers, paper, wood chips/dust, or scrap metal to enter the power regenerative unit or adhere to the cooling fan.
- ☑ The unit should be installed to a metallic or other nonflammable control panel; otherwise it may cause a fire.
- ☑ The power regenerative unit should be installed in an environment that complies to pollution degree 2 with clean circulating air. Clean circulating air is defined as air without polluting substances or electronically contaminated dust.

The following diagrams are for demonstration purposes only, and may differ from the actual product, in which case please refer to the actual product

(Blue arrow) Air intake (Red arrow) Air outflow

Single unit - Standalone setup (Frame A, B, C)

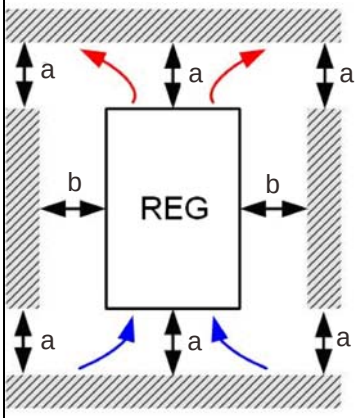

Horizontal linked setup (Frame A, B, C)

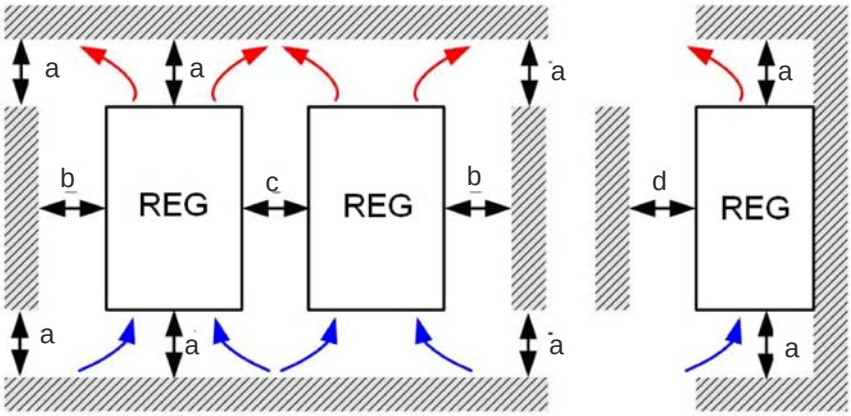

Multiple units - Horizontal standalone setup (Frame A, B, C)

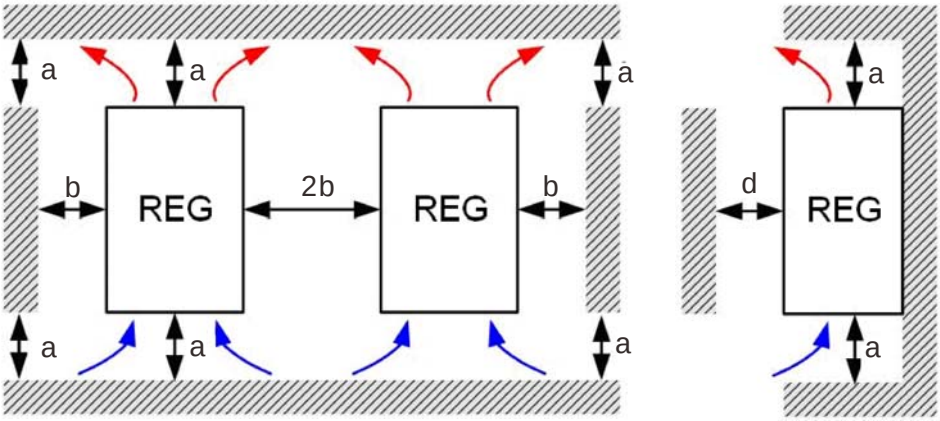

Multiple units - Vertical linked setup (Frame A, B, C)

Ta: Frame A, B, C

When setting up multiple units in a vertical standalone setup, dividers should be installed between the levels and the dimensions of the dividers should be determined on the principle that the temperature at the intake fans should be lower than the operating temperature.

(As shown in the diagrams below) Operating temperature is defined as the temperature measured 50mm in front of the fan inlet.

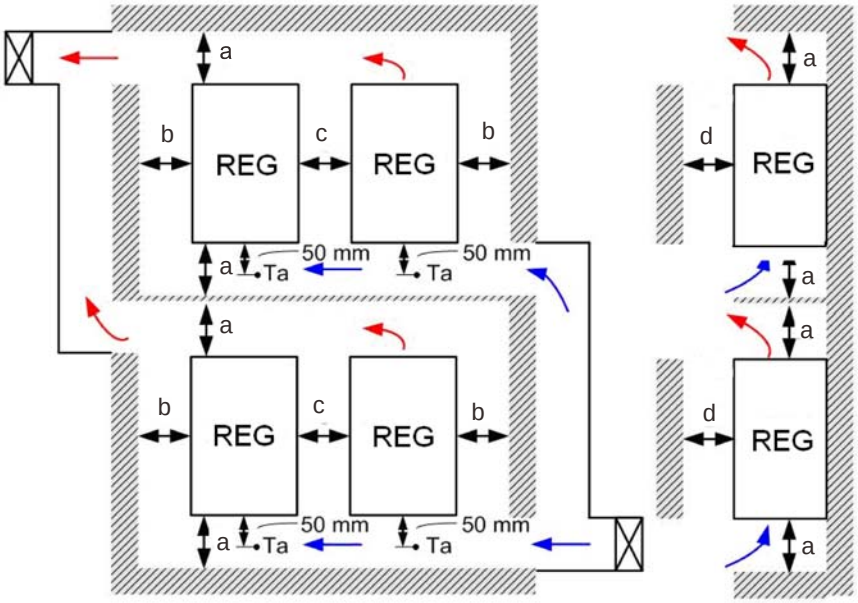

Minimum Distance Required (mm) / Frame	a	b	c	d
A, B, C	60	30	10	0

Frame A	REG075A23A-21; REG110A23A-21; REG075A43A-21; REG110A43A-21; REG150A43A-21;
Frame B	REG150A23A-21; REG185A23A-21; REG220A23A-21; REG185A43A-21; REG220A43A-21; REG300A43A-21;
Frame C	REG300A23A-21; REG370A23A-21; REG370A43A-21; REG450A43A-21; REG550A43A-21;

NOTE

The a ~ d above are all required minimum distances, any distances under these values will affect the cooling fan's functions.

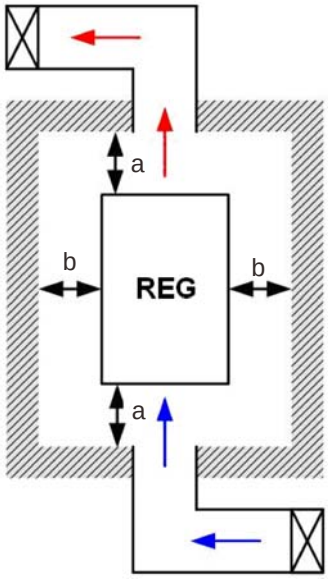

NOTE

※ (As shown in the diagram on the left) The specified distances are only applicable in open spaces. If the units are being installed in a closed space (such as distribution channel or chassis), in addition to keeping the same distances as in an open space, please also install ventilation or air conditioning systems to keep the ambient temperature under the operating temperature.

※ The table shows the required air flow rate for each model when installing single units in a closed space. For multiple units, the required air flow rate must be multiplied by the number of units installed.

※ Please refer to Air flow rate for cooling in the attached table when selecting and designing ventilation systems (Air flow rate for cooling).

※ For the design of air conditioning systems, please refer to Power Dissipation in the attached table. (Power Dissipation).

Air flow rate for cooling						
Model No.	Flow Rate (cfm)			Flow Rate (m^3/hr)		
	External	Internal	Total	External	Internal	Total
REG075A23A-21	44	-	44	75	-	75
REG110A23A-21	44	-	44	75	-	75
REG150A23A-21	92	-	92	155	-	155
REG185A23A-21	92	-	92	155	-	155
REG220A23A-21	92	-	92	155	-	155
REG300A23A-21	121	-	121	206	-	206
REG370A23A-21	118	15	133	201	25	226
REG075A43A-21	44	-	44	75	-	75
REG110A43A-21	44	-	44	75	-	75
REG150A43A-21	44	-	44	75	-	75
REG185A43A-21	92	-	92	155	-	155
REG220A43A-21	92	-	92	155	-	155
REG300A43A-21	92	-	92	155	-	155
REG370A43A-21	121	-	121	206	-	206
REG450A43A-21	118	15	133	201	25	226
REG550A43A-21	118	15	133	201	25	226

※ The table shows the required air flow rate for each model when installing single units in a closed space.

※ For multiple units, multiply the required air flow rate for single-unit installation by the number of units installed.

Power dissipation of REG			
Model No.	Loss External (Heat sink)	Internal	Total
REG075A23A-21	127	86	213
REG110A23A-21	203	121	324
REG150A23A-21	219	161	380
REG185A23A-21	255	184	439
REG220A23A-21	336	216	552
REG300A23A-21	434	186	620
REG370A23A-21	678	220	898
REG075A43A-21	128	76	204
REG110A43A-21	198	93	291
REG150A43A-21	240	122	362
REG185A43A-21	291	138	429
REG220A43A-21	368	158	526
REG300A43A-21	446	211	657
REG370A43A-21	508	184	692
REG450A43A-21	664	218	882
REG550A43A-21	919	257	1176

※ The table shows the required heat dissipation rate due to heat loss for each model when installing single units in a closed space.

※ For multiple units, multiply the heat dissipation rate for single units by the number of units installed. The heat dissipation data are calculated based on each model operating under rated voltage, current, and default carrier wave.

NOTE

■ Normal Control Ambient Temperature Derating Factor Curve

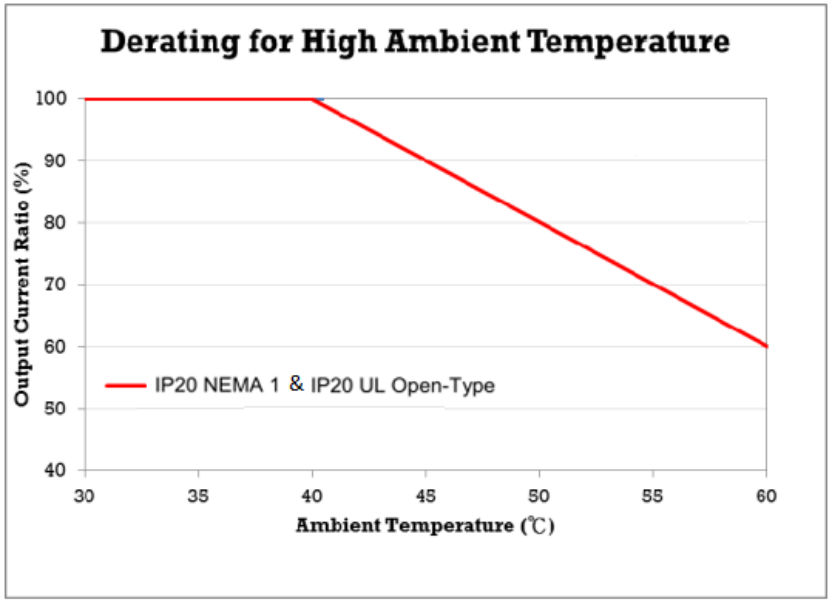

03 Specifications

230V Series

Frame		A		B			C	
Model number REG_ _ _A23A-21		075	110	150	185	220	300	370
Power rating (kW)		7.5	11	15	18.5	22	30	37
DC bus	Rated input current (A_{DC})	24.0	39.0	46.0	59.8	73.2	97.6	122
	Range of voltage activation level	270~390Vdc (Use Pr01-08 to set up))						
Mains	Output current (A_{AC})	20	32	38	49	60	80	100
	Voltage / frequency rating	3-phase AC 200V - 240V (-15% - +10%), 50/60Hz						
	Operation voltage	170~265Vac						
	Frequency Tolerance	47~63Hz						
Net weight		7.9± 0.5Kg		16.5± 0.5Kg			25.5± 0.5Kg	28.0± 0.5Kg

460V Series

Frame		A			B			C		
Model number REG_ _ _A43A-21		075	110	150	185	220	300	370	450	550
Power rating (kW)		7.5	11	15	18.5	22	30	37	45	55
DC bus	Rated input current (A_{DC})	12.8	20.7	24.4	30.5	39.0	52.5	59.8	73.0	91.5
	Range of voltage activation level	516~780Vdc (Use Pr01-08 to set up)								
Mains	Output current (A_{AC})	10.5	17	20	25	32	43	49	60	75
	Voltage / frequency rating	3-phase AC 380V - 480V (-15% - +10%), 50/60Hz								
	Operation voltage	323~528Vac								
	Frequency Tolerance	47~63Hz								
Net weight		7.5± 0.5Kg			17.0± 0.5Kg			26.5± 0.5Kg	29.0± 0.5Kg	29.5± 0.5Kg

Common Characteristics

Control method	SVPWM
Brake torque	80% rated output current when regenerating continuously; 100% rated output current when regenerating for 1 minute at 25% ED (See REG2000 Performance Curve for more information.)
Overload capacity	150% rated output current when regenerating for 10 seconds at 10% ED
Generic input signal	5 channels of signal terminals, 24Vdc 6mA
Generic output signal	2 channels of signal terminals, 48Vdc 50mA, 1 channel of signal terminal, relay output
Cooling method	Forced air cooling (Fan cooling)
Certifications	CE, UL CERTIFIED IND. CONT. EQ. SAFETY US·CA E176972, SEMI F47

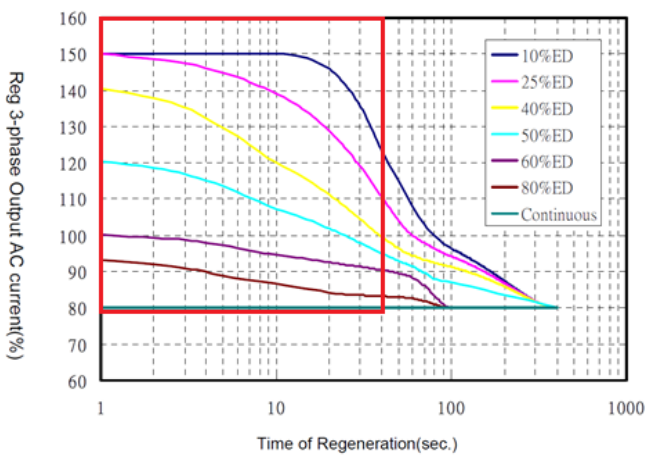

REG2000 Performance Curve

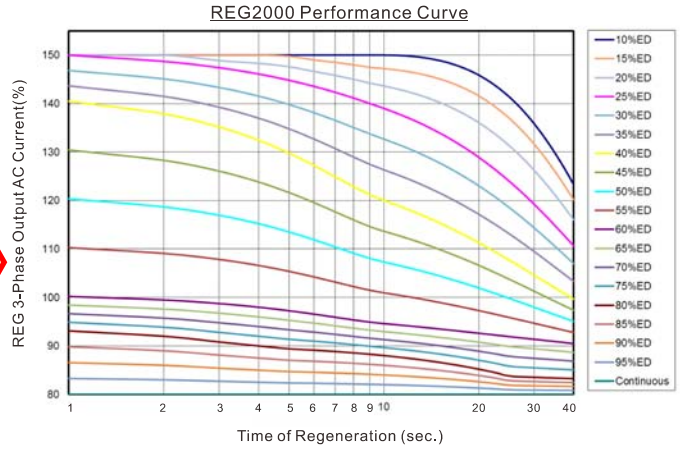

Magnified Performance Curve in Red Rectangle

- The measurement of the plot above is a measurement by combing a Power Regenerative Unit with a DC choke.
- No matter what the ED% is, if the Power Regenerative Unit has a regeneration output more than 400 sec, the Power Regenerative Unit will be considered as performing a continuous regeneration.
- The LED indicators on the standard keypad display the operating status of the Power Regenerative Unit. If you need to do the setup from a keypad, buy an optional keypad. See Chapter 05 for more information.
- Definition of the brake utilization rate ED%:

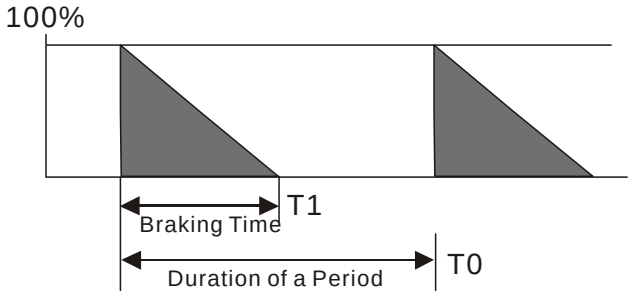

Utilization Rate
ED% = T1 / T0x100 (%)

NOTE

- This product can show current status combining with attached display panel. If you want to execute advance operations and set parameters, please refer to 05 Optional Accessories and purchase a digital keypad.

Environment for Operation, Storage and Transportation

DO NOT expose the Power Regeneration Unit in the bad environment, such as dust, direct sunlight, corrosive/inflammable gasses, humidity, liquid and vibration environment. The salt in the air must be less than 0.01mg/cm^2 every year.			
Environmental	Installation location		IEC60364-1/IEC60664-1 Pollution degree 2, Indoor use only
	Surrounding Temperature	Operation	-10°C ~ +40°C
		Storage/ Transportation	-25°C ~ +70°C
		Non-condensation, non-frozen	
	Rated Humidity	Operation	Max. 90%
		Storage / Transportation	Max. 95%
		No condense water	
	Air Pressure	Operation / Storage	86 to 106 kPa
		Transportation	70 to 106 kPa
	Pollution Level	IEC721-3-3	
		Operation	Class 3C2; Class 3S2
		Storage	Class 2C2; Class 2S2
		Transportation	Class 1C2; Class 1S2
		No concentrate	
	Altitude	Operation	If Power Regeneration Unit is installed at altitude 0~1000m, follow normal operation restriction. If it is installed at altitude 1000~3000m, decrease 2% of rated current or lower 0.5°C of temperature for every 100m increase in altitude. Maximum altitude for Corner Grounded is 2000m.
Package Drop	Storage	ISTA procedure 1A (based on weight) IEC60068-2-31	
	Transportation		
Vibration	[Frame A & B]2~13.2Hz, 1.0mm；13.2~55Hz, 0.7~1.5G；55Hz~512Hz, 1.5G (Comply with IEC 60068-2-6) [Frame C] 2~13.2Hz, 1.0mm; 13.2~55Hz, 0.7~1.0G; 55Hz~512Hz, 1.0G (Comply with IEC 60068-2-6)		
Impact	IEC/EN 60068-2-27		
Operating position	Max. allowed offset angle ±10° (under normal installation position)	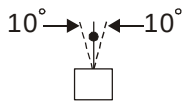	

Specification for Operation Temperature and Protection Level

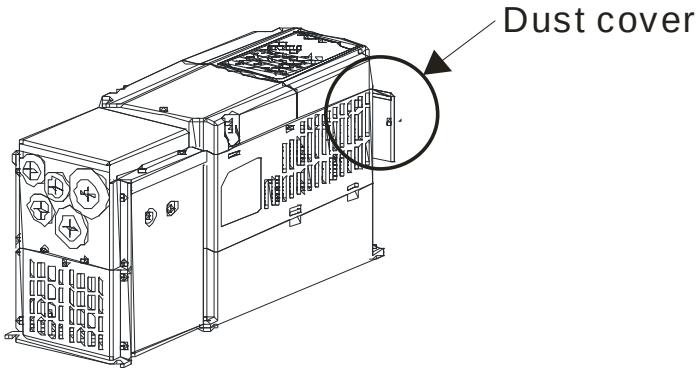

IP20 UL Open-Type

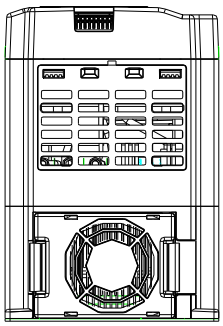

IP20 NEMA 1

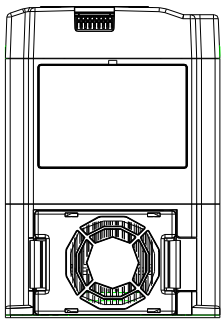

Dust cover	Protection Level	Operation Temp.
with	IP20 NEMA 1	When operating at rated current, the surrounding temperature has to be between -10 °C to +40°C. When the surrounding temperature is over +40°C, decrease 2% of the rated current for every 1°C increase in temperature. The allowable maximum surrounding temperature is 60°C.
without	IP20 UL Open-Type	

■ Normal Control Ambient Temperature Derating Factor Curve

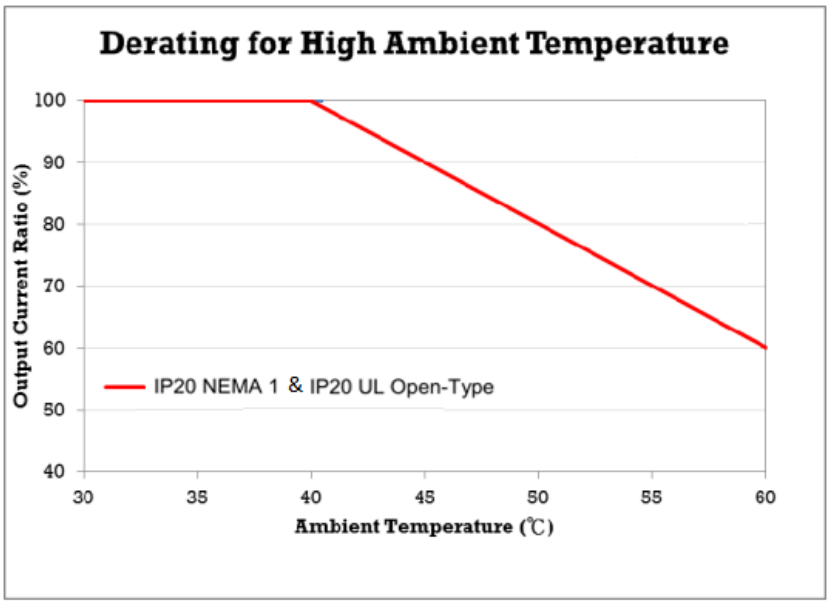

1. Derating of the Power Regenerative Unit decreases by multiplication.
2. Not only when there is a continuous regeneration, the derating is required. But also the conditions covered by the Performance Curve are required to have same derating ration.

Calculation 1:

When the ambient temperature = 40°C, ED = 10%, the braking capacity of the Power Regenerative Unit = 150%, 10s (See REG2000 Performance Curve).

When the ambient temperature = 45°C, see Normal Control Ambient Temperature Derating Factor Curve, the Power Regenerative Unit needs a derating of 10% = (45°C - 40°C) x 2%

Calculation 2:

When the ambient temperature = 40°C, the braking capacity of the Power Regenerative Unit = 80% of the rated output current.

When the ambient temperature = 55°C and the regeneration is continuous, the braking capacity of the Power Regenerative Unit is 56% = [80% x (100% - 30%)] of the rated output current.

04 Wiring

After removing the front cover, examine if the power and control terminals are clearly noted. Please read following precautions before wiring.

- ☑ Make sure that power is only applied to the R/L1, S/L2, T/L3, DC+, and DC- terminals. Failure to comply may result in damage to the equipment. The voltage and current should lie within the range as indicated on the nameplate (Chapter 1-1).
- ☑ All the units must be grounded directly to a common ground terminal to prevent lightning strike or electric shock.
- ☑ Please make sure to fasten the screw of the main circuit terminals to prevent sparks which is made by the loose screws due to vibration.
- ☑ If a braking resistor is already installed in the existing system, it is recommended to keep the braking resistor for further use. But note that the reasonable power regenerative level, when equipping with a braking resistor, should be set by Pr01-08 as:

  (Vac Voltage Level x 1.414) < REG DC-side voltage activation level (Pr01-08) < Braking Resistor activation level. A reasonable margin should be considered to ensure that the DC ripple won't trigger setting value of Pr01-08 by mistake.
- ☑ If the Power Regenerative Unit is NOT equipped with a braking resistor, it is recommended to pay attention at the **DFMEA** (Design Failure Mode and Effect Analysis). The Power Regenerative Unit provides full status indication. Signals can be provided by external terminals to work with the reliability of system integration.
- ☑ Signals can be sent through communication and MOx terminals, if a Power Regenerative Unit is malfunctioning.

- ☑ It is crucial to turn off the Power Regeneration Unit power before any wiring installation are made. A charge may still remain in the DC bus capacitors with hazardous voltages even if the power has been turned off therefore it is suggested for users to measure the remaining voltage before wiring. For your personnel safety, please do not perform any wiring before the voltage drops to a safe level < 25 Vdc. Wiring installation with remaining voltage condition may cause sparks and short circuit.
- ☑ Only qualified personnel familiar with Power Regeneration Unit is allowed to perform installation, wiring and commissioning. Make sure the power is turned off before wiring to prevent electric shock.

- ☑ When wiring, please choose the wires with specification that complies with local regulation for your personnel safety.
- ☑ Check following items after finishing the wiring:
  1. Are all connections correct?
  2. Any loosen wires?
  3. Any short-circuits between the terminals or to ground?

4-1 Wiring Diagram

1. Normal Wiring Diagram

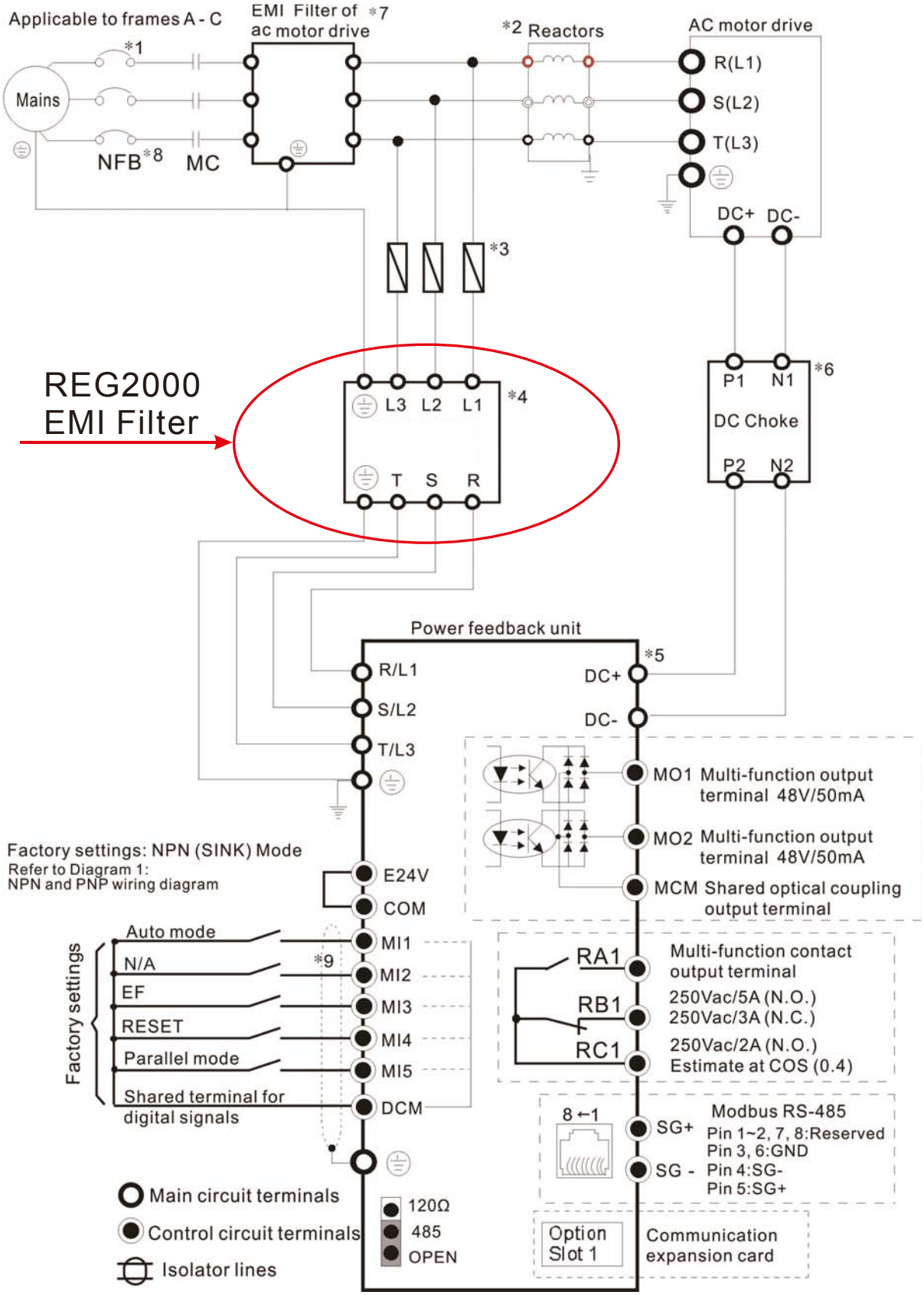

*1 The NFB can be selected based on the selection of the drive.
*2 If a reactor is connected to the drive, install the reactor here (optional).
*3 Please refer to 05 Optional Accessories for the selection of fuses.
*4 The length between REG2000 EMC filter and the Power Regenerative Unit must be less than 10m, and can't provide power to other equipment from here. While using REG2000 EMC filter, please remove the grounding short-circuit plate on the Power Regenerative Unit.
*5 The length of the DC+/DC- wires must be less than 5m, and twisted lines are highly recommended.
*6 There is an attached DC choke to the shipment, please install it as the above normal wiring diagram. The P1,P2,N1,N2 in Normal Wiring Diagram is equal to the terminal 1,2,3,4 in the Dimensions of DC Choke(Diagram 2). Installing the attached DC choke can increase the regenerative efficiency and prevent from electromagnetic interference. The part numbers of DC choke in REG2000 series is in Table 1.
*7 If there is no REG2000 EMC filter, we recommend using inductors (w/o capacitors) as the EMC filter of AC Motor Drives, in order to avoid capacitors damaged by current ripples.
*8 If providing power to other instruments is needed, we recommend using the terminals of magnetic contactor (MC) or NFB to connect to other instruments.
*9 Wiring in auto mode is shown below. Please refer to Pr02-00 ~ Pr02-04 for detailed wiring of multi-function input terminal (MIx, default setting is MI1).

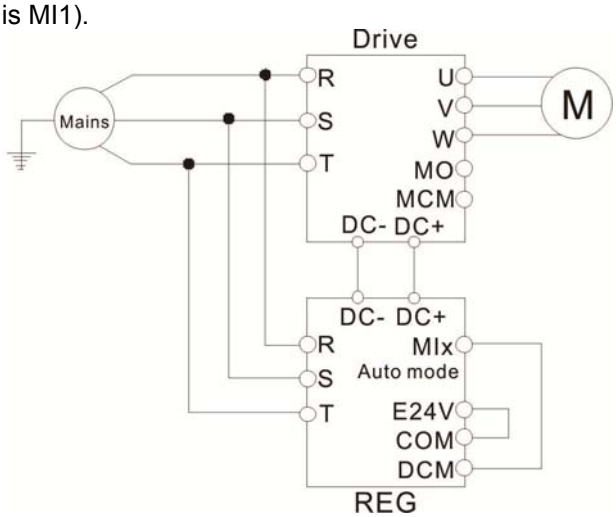

*10 There are two wiring methods of multi-function input terminal (MIx). Please refer to the following diagrams:

Diagram: SINK（NPN）/SOURCE（PNP）Mode switching terminal descriptions

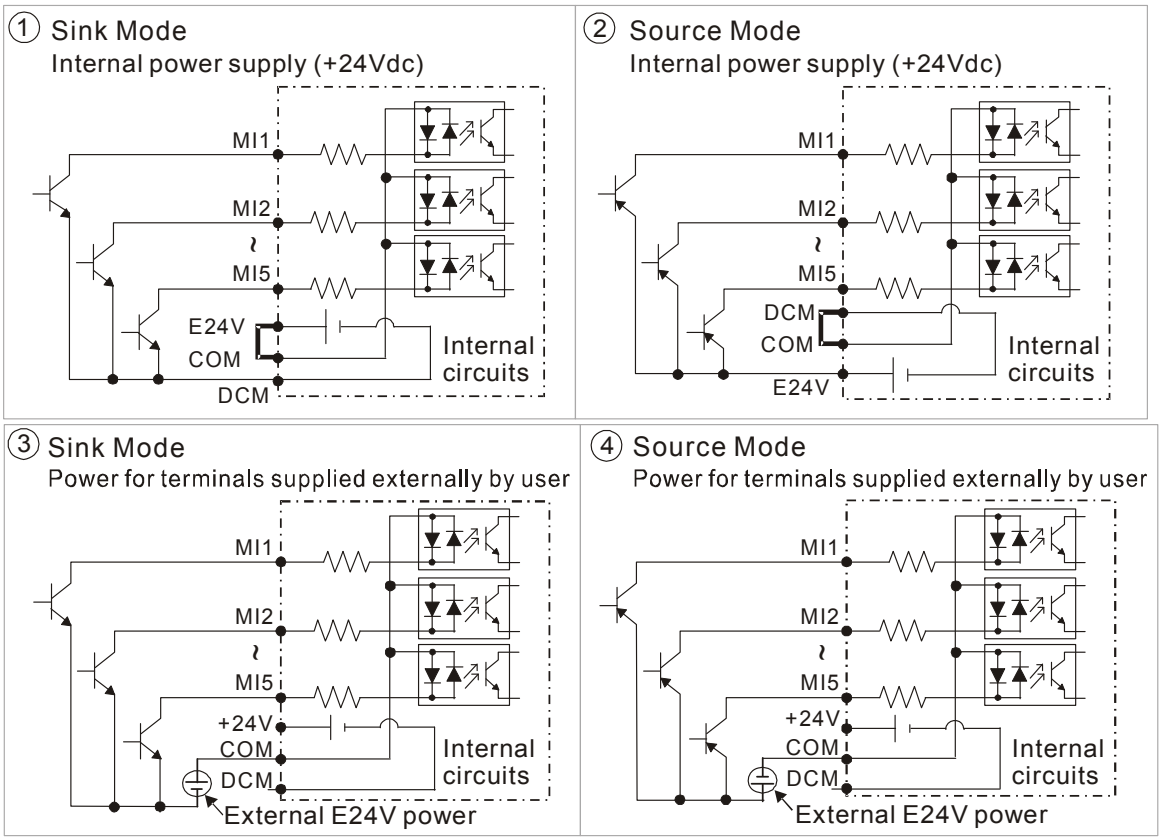

2. Dimensions of DC choke

Terminals: #1 = P1, #2 = P2, #3 = N1, #4 = N2

RG-RC110D2, RG-RC150D4

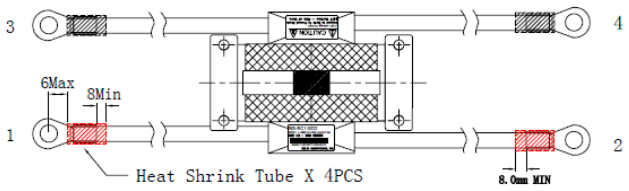

Top View

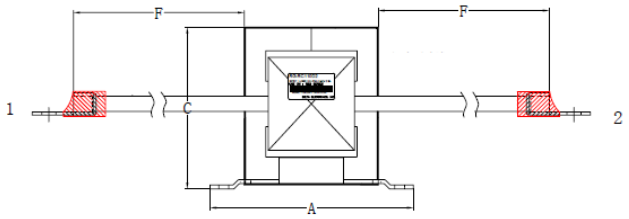

Front View

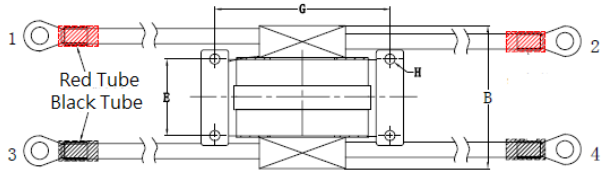

Bottom View

A: 95.0 MAX
B: 70.0 MAX
C: 86.0 MAX
E: 32±0.5
F: 85±5.0
G: 83±0.5
H: Φ5.5±0.3

RG-RC220D2, RG-RC300D4

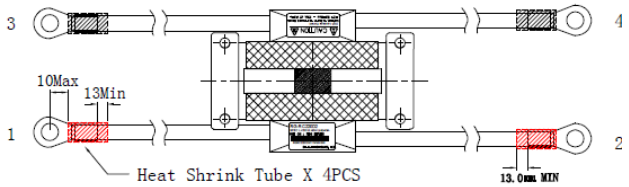

Top View

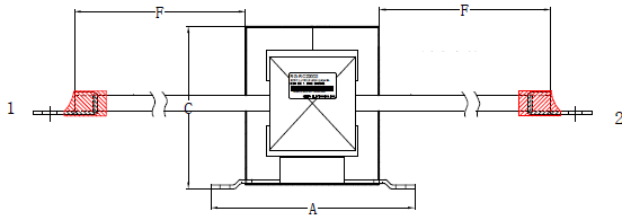

Front View

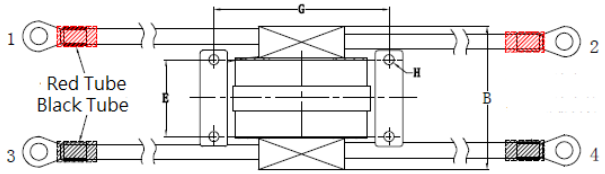

Bottom View

A: 105.0 MAX
B: 75.0 MAX
C: 96.0 MAX
E: 20±0.5
F: 85±5.0
G: 93±0.5
H: Φ5.5±0.3

RG-RC370D2

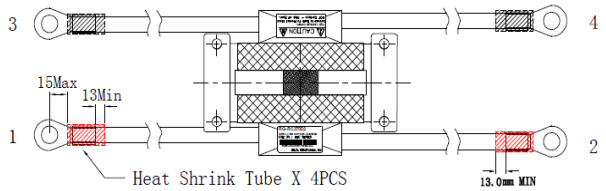

Top View

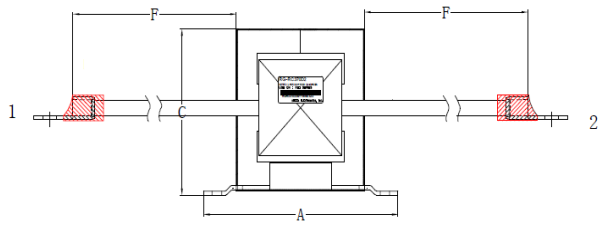

Front View

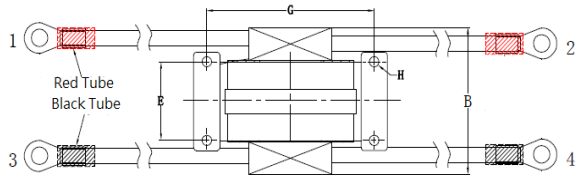

Bottom View

A: 105.0 MAX
B: 85.0 MAX
C: 96.0 MAX
E: 20±0.5
F: 85±5.0
G: 93±0.5
H: Φ5.5±0.3

RG-RC550D4

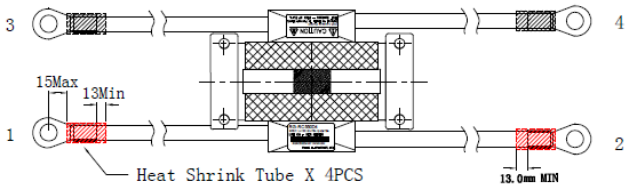

Top View

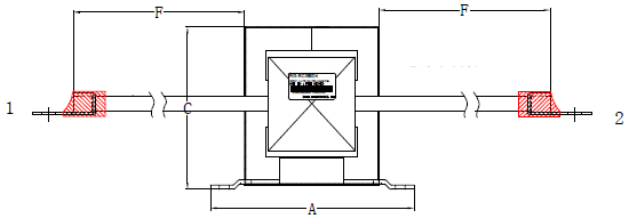

Front View

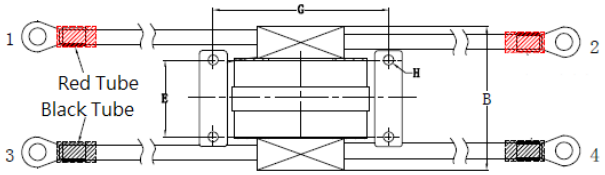

Bottom View

A: 105.0 MAX
B: 75.0 MAX
C: 96.0 MAX
E: 20±0.5
F: 85±5.0
G: 93±0.5
H: Φ5.5±0.3

- Please make sure that P, N terminals (DC Bus) don't short through while installing DC chokes.
- The wiring sizes of the DC choke needs to follow the wire size defined in the user manual. See section 4-10, 4-11, and 4-12 for recommended wire sizes of different frames.

Table 1: The part numbers of DC choke in REG2000 series

REG Model Name	Model of DC Choke(standard accessory)	Weight (g/unit)
REG075A23A-21	RG-RC110D2	836.
REG110A23A-21		
REG150A23A-21	RG-RC220D2	900
REG185A23A-21		
REG220A23A-21		
REG300A23A-21	RG-RC370D2	1086
REG370A23A-21		
REG075A43A-21	RG-RC150D4	838
REG110A43A-21		
REG150A43A-21		
REG185A43A-21	RG-RC300D4	1058
REG220A43A-21		
REG300A43A-21		
REG370A43A-21	RG-RC550D4	1220
REG450A43A-21		
REG550A43A-21		

3. Multi-AC Motor Drives Wiring Diagram

※ Points for Attention:

A. Please refer to this diagram to wire up.

1) Follow specifications of the motor drive to choose the appropriate non-fuse breaker (NFB) and the magnetic contactor (MC).

2) Follow the instruction the user manual, connect an input reactor to a motor drive. A 3% AC input reactor is recommended. Connect an input reactor to a motor drive in the shortest distance possible.

3) See section 5-3, choose an appropriate fuse.

4) The maximum cable length between a REG2000 and an EMC filter cannot be more than 10m. Remove the grounding short-circuit plate before you install an EMC filter.

5) Installing any other Power Regenerative Unit on the common DC Bus is NOT allowed.

6) The maximum cable length between DC+/DC- cannot be more than 5m. Using twisted pair is recommended.

7) Follow the wiring diagram to install the DC reactor (standard accessory) to decrease the electric magnetic interference (EMI) and to increase the work efficiency.

8) Follow the specifications in section 5-4 to choose an appropriate EMC filter to avoid strong electro-magnetic interference (EMI).

B. Please make sure that your AC motor drives can operate in common DC bus at first. And be aware that the ratings of rectifier or AC motor drives are properly chosen.

C. In order to choose proper power regenerative unit, please confirm the maximum regenerative energy while all AC motor drives work at the same time firstly.

D. For one-to-many installation, it is recommended to install a fuse, i.e. Fuse A/B/C…, at the DC input side of every drive. Please calculate and select a suitable fuse for your every drive: Fuse type = (Rated input current of drive) x 2.5.

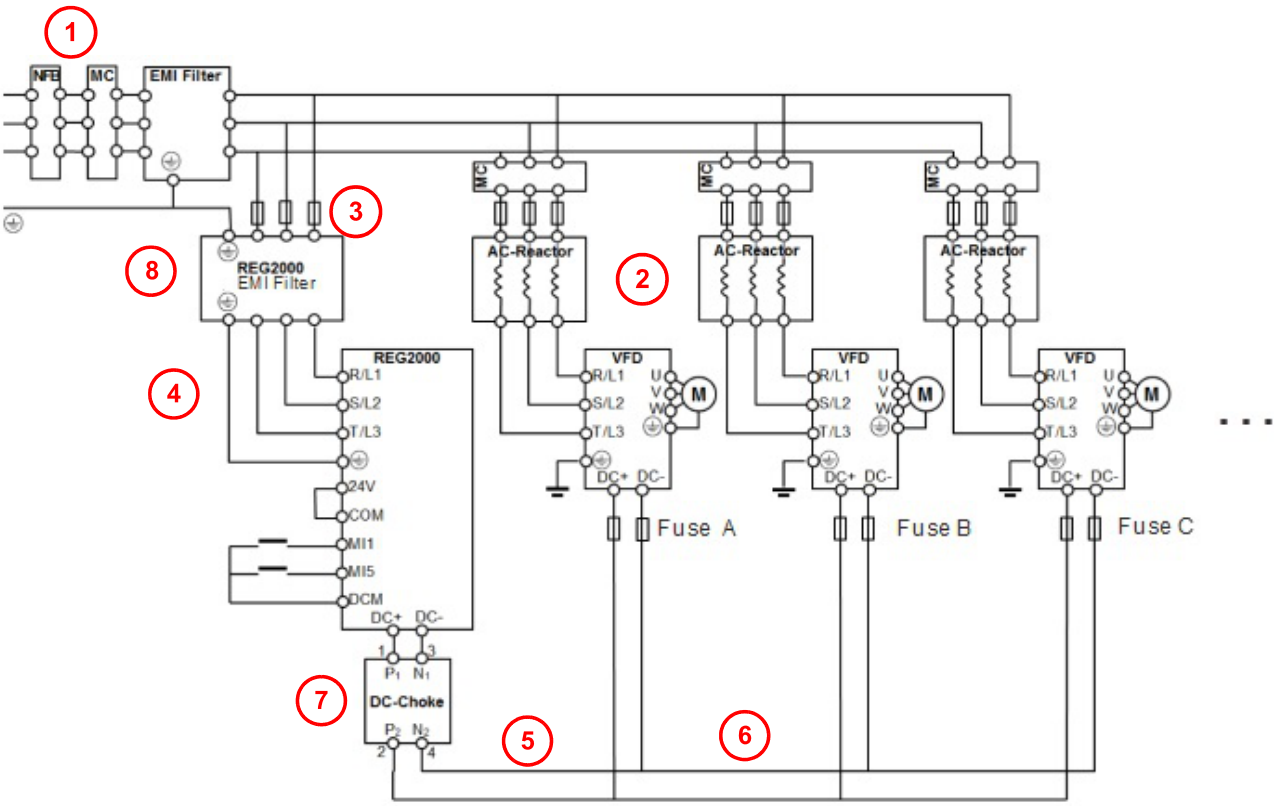

4. Multi-REG2000 Wiring Diagram

※ Points for Attention:

A. Support maximum 4 power regenerative units working in parallel at the same time.

1. Follow specifications of the motor drive to choose the appropriate non-fuse breaker (NFB) and the magnetic contactor (MC).
2. Follow the instruction the user manual, connect an input reactor to a motor drive. A 3% AC input reactor is recommended. Connect an input reactor to a motor drive in the shortest distance possible.
3. See section 5-3, choose an appropriate fuse.
4. The maximum cable length between a REG2000 and an EMC filter cannot be more than 10m. Remove the grounding short-circuit plate before you install an EMC filter.
5. Installing any other power regenerative unit on the common DC Bus is NOT allowed.
6. The maximum cable length between DC+/DC- cannot be more than 5m. Using twisted pair is recommended.
7. Follow the wiring diagram to install the DC reactor (standard accessory) to decrease the electric magnetic interference (EMI) and to increase the work efficiency.
8. Follow the specifications in section 5-4 to choose an appropriate EMC filter to avoid strong electro-magnetic interference (EMI).

B. DC choke is required, and please install DC choke as near each power regenerative unit as better.

C. Please refer to the following diagram. Instead of directly coming from power regenerative unit 1, the wiring which connects to power regenerative unit 2 shall come from the DC bus of the AC motor drive. In addition, using copper bars for wiring are highly recommended.

D. Wiring in parallel mode is shown below. Please refer to Pr02-00 ~ Pr02-04 for detailed wiring of multi-function input terminal (MIx, default setting is MI5). Working in parallel, each power regenerative unit will reduce its current limit to 80% automatically.

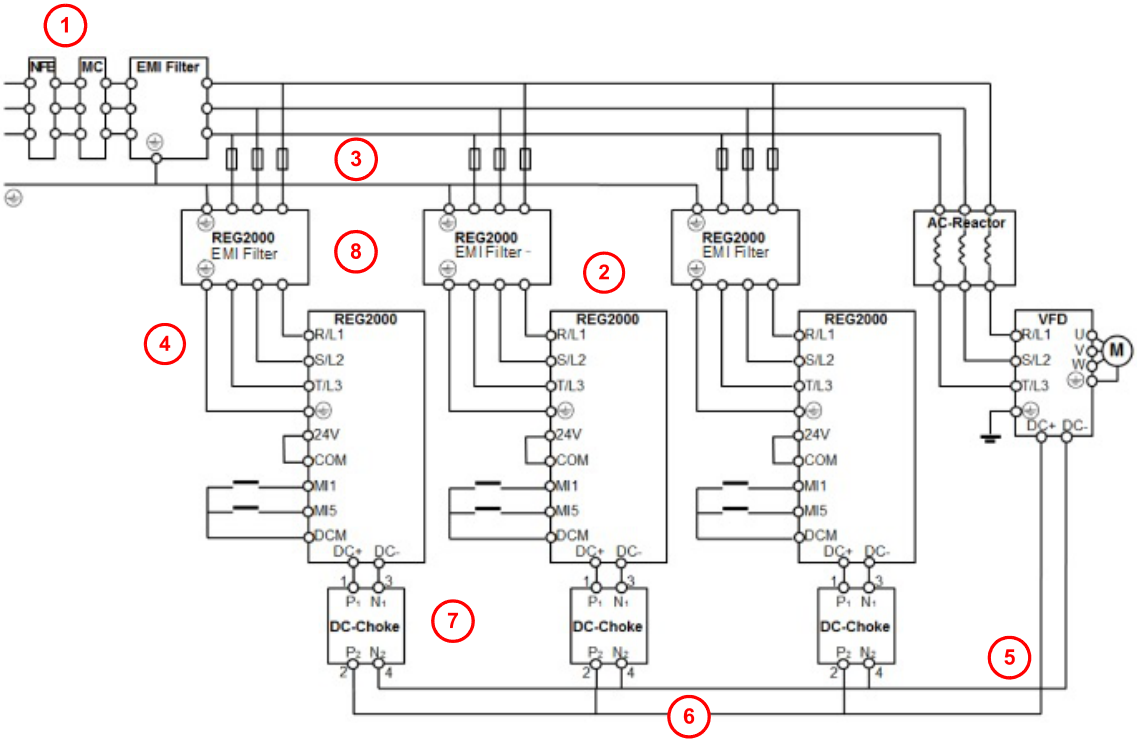

4-2 Main Circuit Terminals

Please remove the top cover before wiring the main circuit terminals.

The unit appearances shown in the figures are for reference only, a real drive may look different.

Removing the outer cover for wiring

1) Screw torque: 14~16Kg-cm [12.15~13.88lb-in.] (1.37~1.57 Nm) After loosening the screws, remove the wiring top cover as shown in the diagrams below

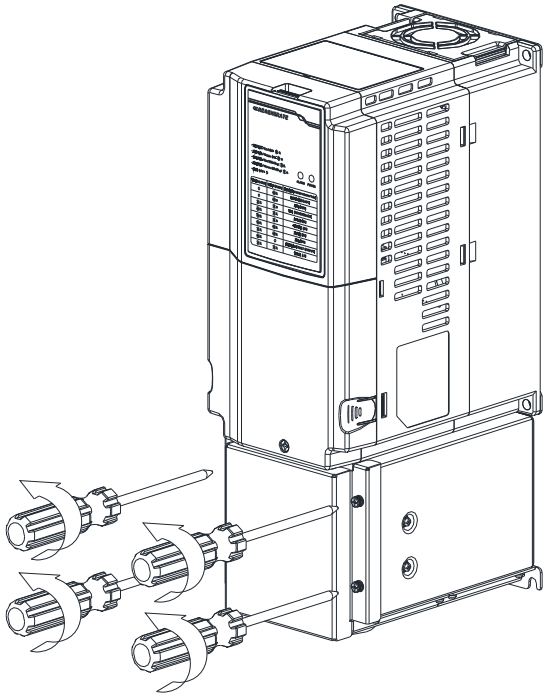

Frame A, B,

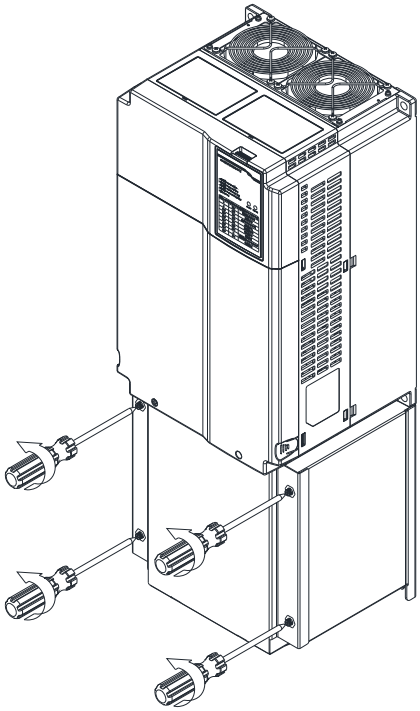

Frame C

2) After loosening the screws, remove the wiring top cover as shown in the diagrams below

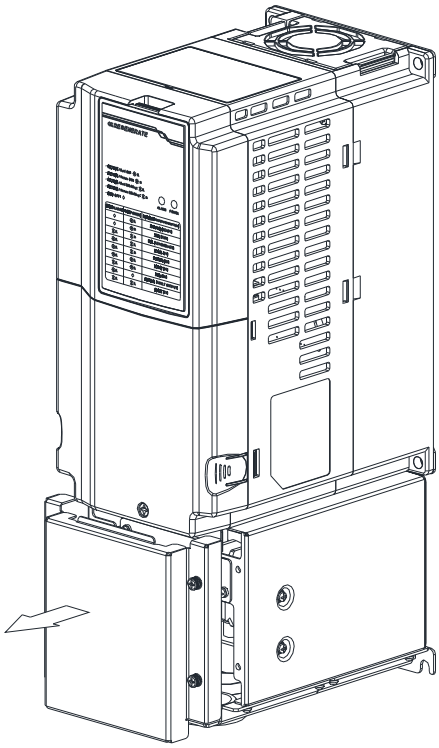

Frame A, B,

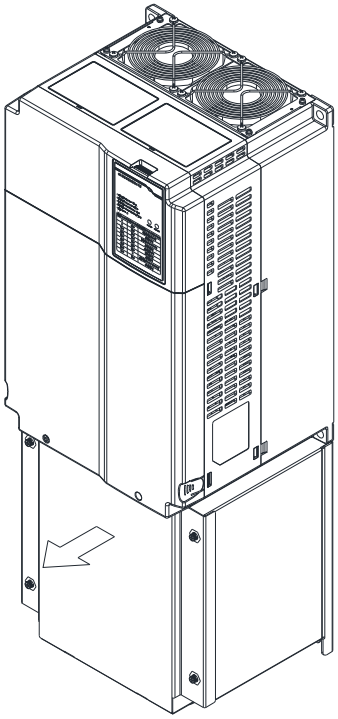

Frame C

3) Loosen the screws to wire the main circuit terminals

Frame A, screw torque: 6~8Kg-cm [5.2~6.9lb-in.] (0.59~0.78 Nm)

Frame B, screw torque: 14~16Kg-cm [12.15~13.88lb-in.] (1.37~1.57 Nm)

Frame C, screw torque: 10~12Kg-cm [8.68~10.42lb-in.] (0.98~1.18 Nm)

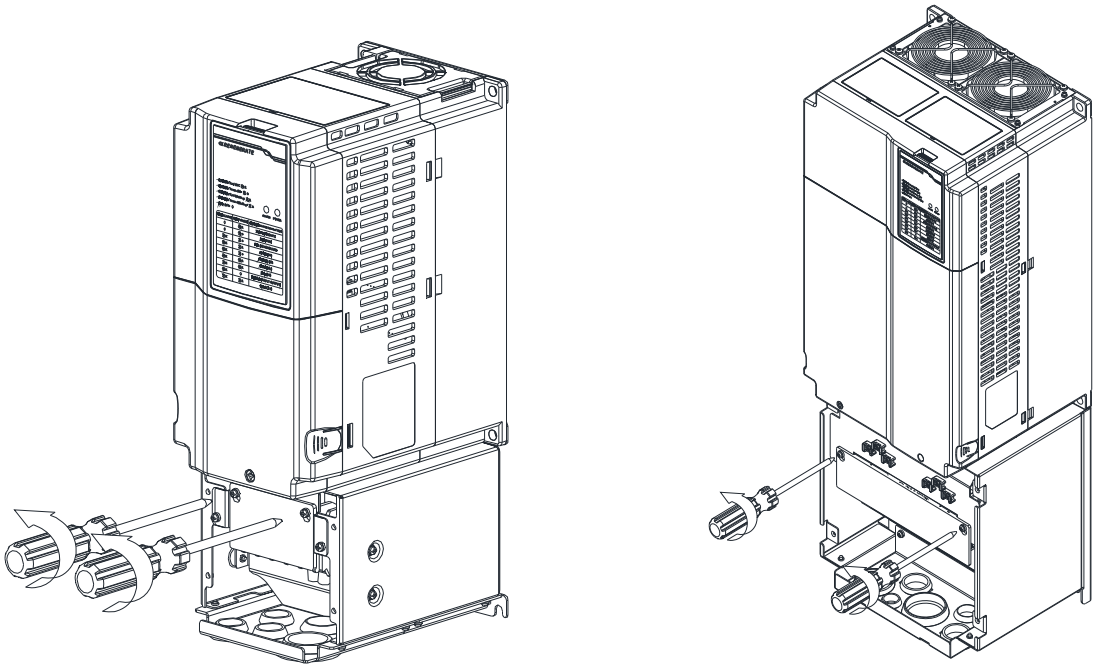

Frame A, B, Frame C

Main Circuit Terminal Diagram

Applicable to frames A - C

Provides three-phase power input

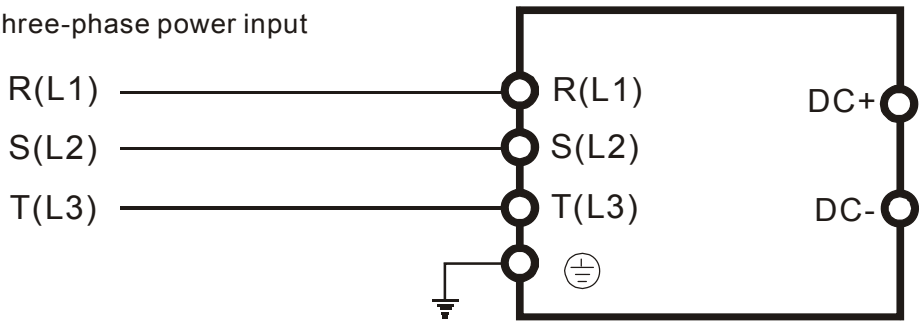

Terminal labels	Descriptions
R/L1, S/L2, T/L3	AC line input terminals 3-phase
DC+, DC-	Connect to the AC motor drive's terminals DC+ and DC- respectively. There is a build-in fuse, which can prevent from damaging AC motor drive when REG malfunctions, in the internal hardware circuit.
⏚	Earth connection, please comply with local regulations.

Main Circuit Terminal Specifications

Frame A

Main Circuit Terminals:

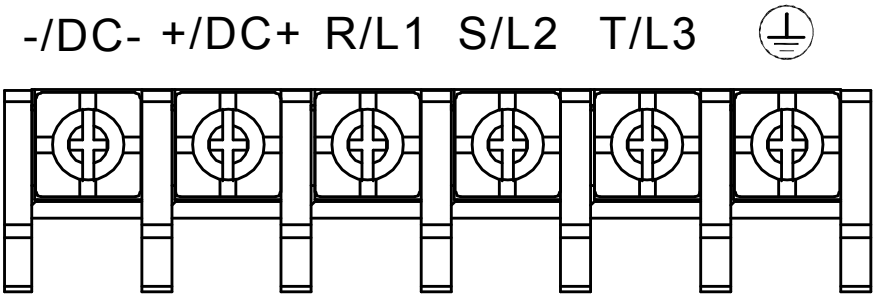

For REG2000 Frame A						
Model Name	**Terminals: R/L1, S/L2, T/L3, -/DC+, +/DC+**			**Terminals:**		
	Max. Wire Size	**Mini. Wire Size**	**Screw Size Tightening Torque (±10%)**	**Max. Wire Size**	**Mini. Wire Size**	**Screw Size Tightening Torque (±10%)**
REG075A23A-21	10 mm² [8 AWG]	6 mm² [10 AWG]	M4 12 kg-cm (10.4 lb-in.) (1.2 N-m)	6 mm² [10 AWG]	6 mm² [10 AWG]	M4 12 kg-cm (10.4 lb-in.) (1.2 N-m)
REG110A23A-21		10 mm² [8 AWG]		10 mm² [8 AWG]	10 mm² [8 AWG]	
REG075A43A-21		2.5 mm² [14 AWG]		2.5 mm² [14 AWG]	2.5 mm² [14 AWG]	
REG110A43A-21		6 mm² [10 AWG]		6 mm² [10 AWG]	6 mm² [10 AWG]	
REG150A43A-21		6 mm² [10 AWG]		6 mm² [10 AWG]	6 mm² [10 AWG]	

- If you install in an environment of 50 ºC ambient temperature, select copper wires which are resistant to 75ºC or 90ºC and support 600V rated voltage.
- If you install in an environment of above 50 ºC ambient temperature, select copper wires which are resistant to 90ºC and support 600V rated voltage.
- To comply with UL standard, copper wires are required for installation. According to UL, the wire gauge of copper wires has to be resistant to 75ºC. Do NOT reduce the wire gauge when choosing high temperature resistant copper wires.

Unit: mm

AWG	VENDOR	VENDOR P/N	A (MAX.)	B (MAX.)	C (MIN.)	D (MAX.)	d2 (MIN.)	E (MIN.)	F (MIN.)	W (MAX.)	t (MAX.)
14	KST	RNBL2-4	20	5	5.5	9	4.3	8	5.5	10	1.5
10		RNBL5-4									
8		RNBS8-4									

NOTE

Follow Figure 1 to choose wiring size of terminals.

As shown in Figure 2, insulated heat shrink tuning should be at least 600Vac resistant to comply to UL and CSA regulations (600Vac, YDPU2).

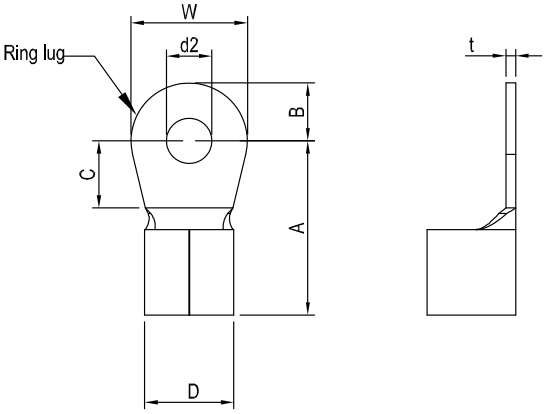

Figure 1.

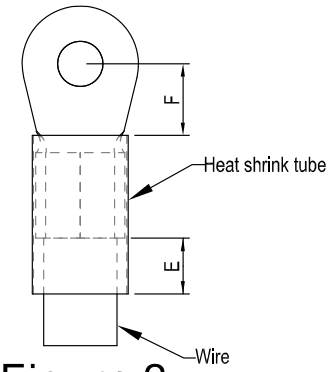

Figure 2.

Frame B

Main Circuit Terminals:

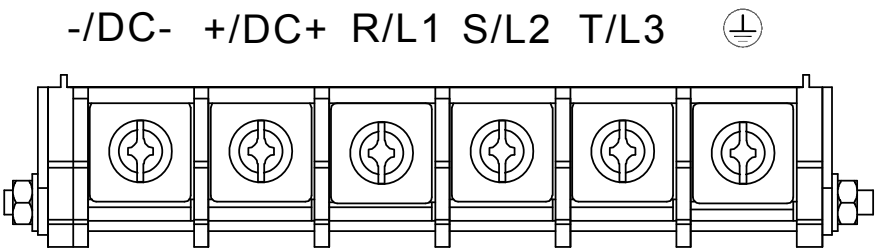

For REG2000 Frame B						
Model Name	**Terminals: R/L1, S/L2, T/L3, -/DC+, +/DC+**			**Terminals: ⏚**		
	Max. Wire Size	**Mini. Wire Size**	**Screw Size Tightening Torque (±10%)**	**Max. Wire Size**	**Mini. Wire Size**	**Screw Size Tightening Torque (±10%)**
REG150A23A-21	25 mm² [4 AWG]	16 mm² [6 AWG]	M6 31 kg-cm (26.9 lb-in.) (3.0 N-m)	16 mm² [6 AWG]	16 mm² [6 AWG]	M6 31 kg-cm (26.9 lb-in.) (3.0 N-m)
REG185A23A-21		25 mm² [4 AWG]		25 mm² [4 AWG]	16 mm² [6 AWG]	
REG220A43A-21		25 mm² [4 AWG]		25 mm² [4 AWG]	16 mm² [6 AWG]	
REG185A43A-21		10 mm² [8 AWG]		10 mm² [8 AWG]	10 mm² [8 AWG]	
REG220A43A-21		10 mm² [8 AWG]		10 mm² [8 AWG]	10 mm² [8 AWG]	
REG300A43A-21		16 mm² [6 AWG]		16 mm² [6 AWG]	16 mm² [6 AWG]	

- If you install in an environment of 50 ºC ambient temperature, select copper wires which are resistant to 75ºC or 90ºC and support 600V rated voltage.

- If you install in an environment of above 50 ºC ambient temperature, select copper wires which are resistant to 90ºC and support 600V rated voltage.

- To comply with UL standard, copper wires are required for installation. According to UL, the wire gauge of copper wires has to be resistant to 75ºC. Do NOT reduce the wire gauge when choosing high temperature resistant copper wires.

Unit: mm

AWG	VENDOR	VENDOR P/N	A (MAX.)	B (MAX.)	C (MIN.)	D (MAX.)	d2 (MIN.)	E (MIN.)	F (MIN.)	W (MAX.)	t (MAX.)
8	KST	RNBL8-6	25.5	7.5	8.5	13	6.2	13	10	15	1.5
6		RNBS14-6									
4		RNBS22-6									

NOTE

Follow Figure 1 to choose wiring size of terminals.

As shown in Figure 2, insulated heat shrink tuning should be at least 600Vac resistant to comply to UL and CSA regulations (600Vac, YDPU2).

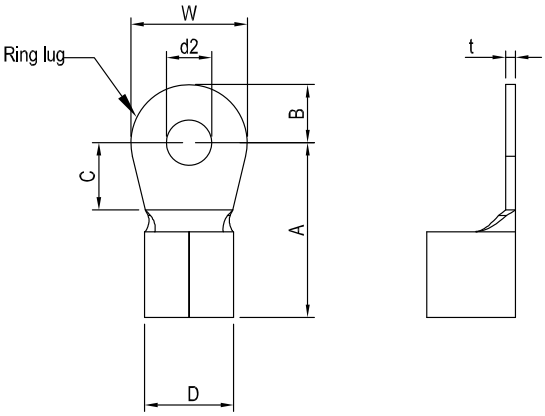

Figure 1.

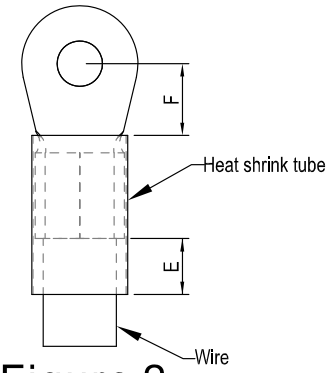

Figure 2.

Frame C

Main Circuit Terminals:

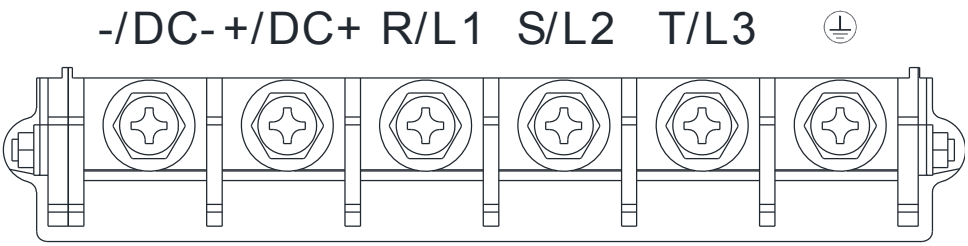

For REG2000 Frame C						
Model Name	**Terminals: R/L1, S/L2, T/L3, -/DC+, +/DC+**			**Terminals: ⏚**		
	Max. Wire Size	**Mini. Wire Size**	**Screw Size Tightening Torque (±10%)**	**Max. Wire Size**	**Mini. Wire Size**	**Screw Size Tightening Torque (±10%)**
REG300A23A-21	50 mm² [1/0 AWG]	35 mm² [2 AWG]	M8 81.5 kg-cm (70.8 lb-in.) (8 N-m)	35 mm² [2 AWG	16 mm² [6 AWG]	M6 31 kg-cm (26.9 lb-in.) (3.0 N-m)
REG370A23A-21		50 mm² [1/0 AWG]		50 mm² [1/0 AWG]	25 mm² [4 AWG]	
REG370A43A-21		25 mm² [4 AWG]		25 mm² [4 AWG]	16 mm² [6 AWG]	
REG450A43A-21		25 mm² [4 AWG]		25 mm² [4 AWG]	16 mm² [6 AWG]	
REG550A43A-21		35 mm² [2 AWG]		35 mm² [2 AWG]	16 mm² [6 AWG]	

- If you install in an environment of 50 ºC ambient temperature, select copper wires which are resistant to 75ºC or 90ºC and support 600V rated voltage.

- If you install in an environment of above 50 ºC ambient temperature, select copper wires which are resistant to 90ºC and support 600V rated voltage.

- To comply with UL standard, copper wires are required for installation. According to UL, the wire gauge of copper wires has to be resistant to 75ºC. Do NOT reduce the wire gauge when choosing high temperature resistant copper wires.

AWG	VENDOR	VENDOR P/N	A (MAX.)	B (MAX.)	C (MIN.)	D (MAX.)	d2 (MIN.)	E (MIN.)	F (MIN.)	W (MAX.)	t (MAX.)
6	KST	RNB14-8	40.0	11.0	9.5	22.0	8.3	13.0	11.0	24.0	2.5
4		RNB22-8									
2		RNBS38-8									
1/0		RNB60-8									

NOTE

Follow Figure 1 to choose wiring size of terminals.

As shown in Figure 2, insulated heat shrink tuning should be at least 600Vac resistant to comply to UL and CSA regulations (600Vac, YDPU2).

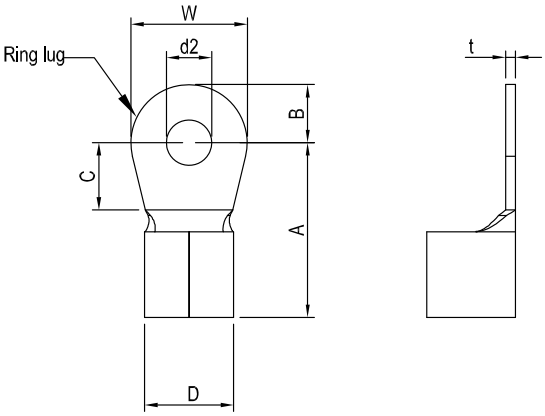

Figure 1.

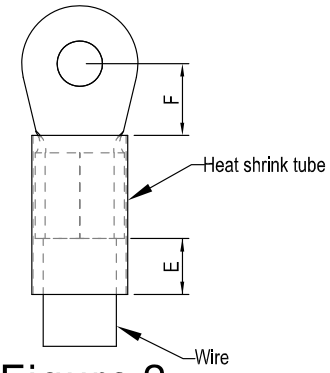

Figure 2.

CAUTION

Main circuit power input terminals:

- ☑ Do not connect 3-phase model to one-phase power. R/L1, S/L2 and T/L3 has no phase-sequence requirement, it can be used upon random selection.
- ☑ It is recommend to add a magnetic contactor (MC) to the power input wiring to cut off power quickly and reduce malfunction when activating the protection function of the Power Regeneration Unit. Both ends of the MC should have an R-C surge absorber.
- ☑ Fasten the screws in the main circuit terminal to prevent sparks condition made by the loose screws due to vibration.
- ☑ Lease use voltage and current within the specification.
- ☑ When using a general GFCI (Ground Fault Circuit Interrupter), select a current sensor with sensitivity of 200mA or above and not less than 0.1-second operation time to avoid nuisance tripping.
- ☑ Please use the shield wire or tube for the power wiring and ground the two ends of the shield wire or tube.

4-3 Control Circuit Terminals

Please remove the top cover before wiring the multi-function input and output terminals

The unit appearances shown in the figures are for reference only, a real drive may look different.

Removing the outer cover for wiring

1) Screw torque: 14~16Kg-cm [12.15~13.88lb-in.] (1.37~1.57 Nm) After loosening the screws, remove the wiring top cover as shown in the diagrams below

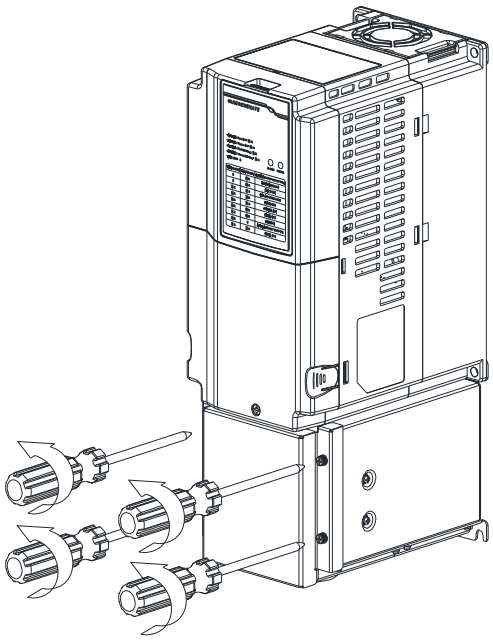

Frame A, B,

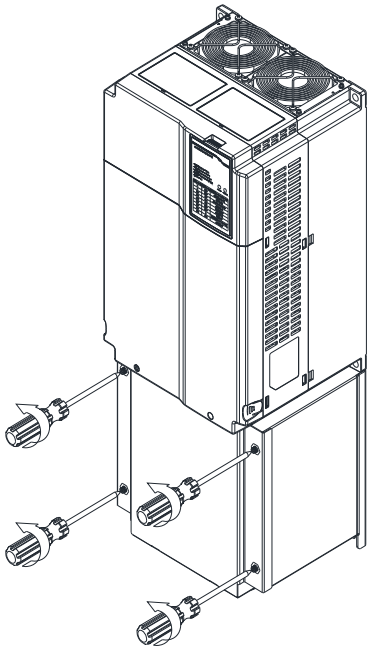

Frame C

2) After loosening the screws, remove the wiring top cover as shown in the diagrams below

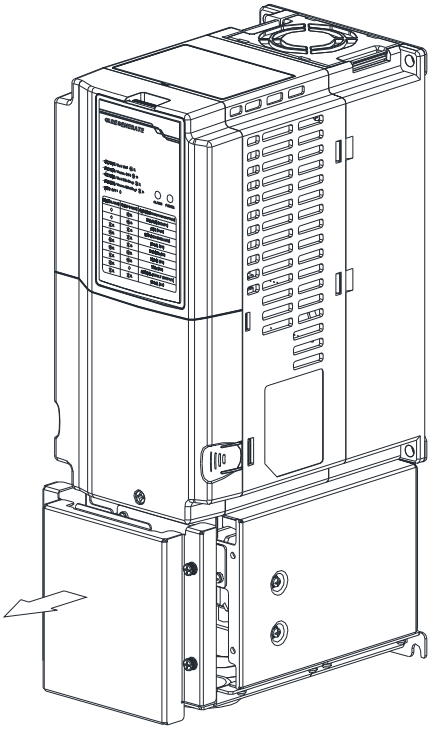

Frame A, B,

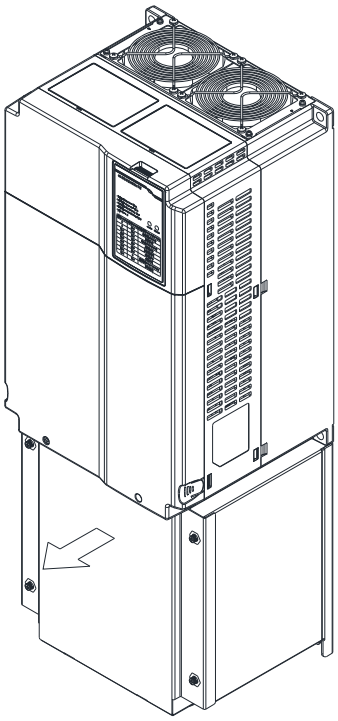

Frame C

3) Loosen the screws

Frames A, B, C Screw torque: 10~12Kg-cm [8.68~10.42lb-in.] (0.98~1.18 Nm)

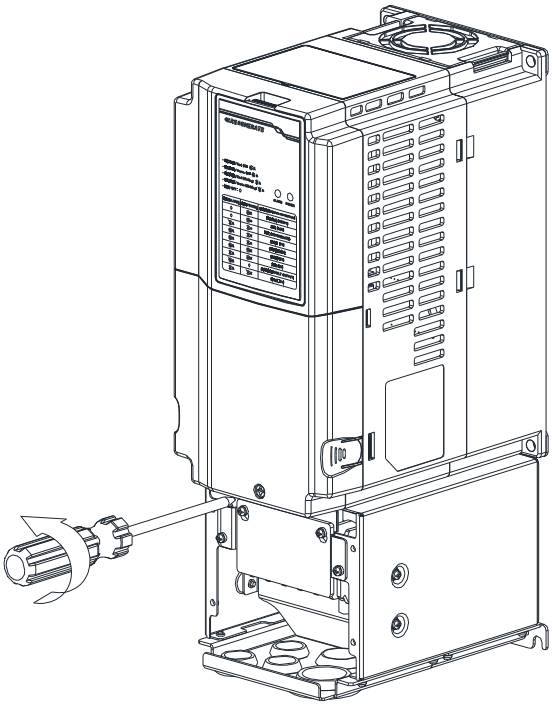

Frame A, B,

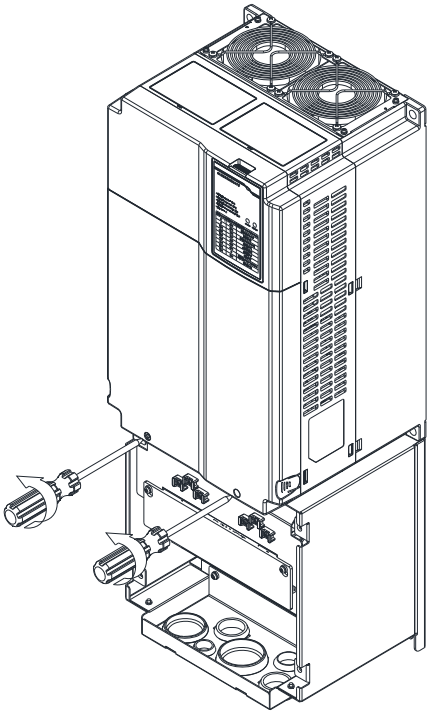

Frame C

4) Control terminals can now be wired

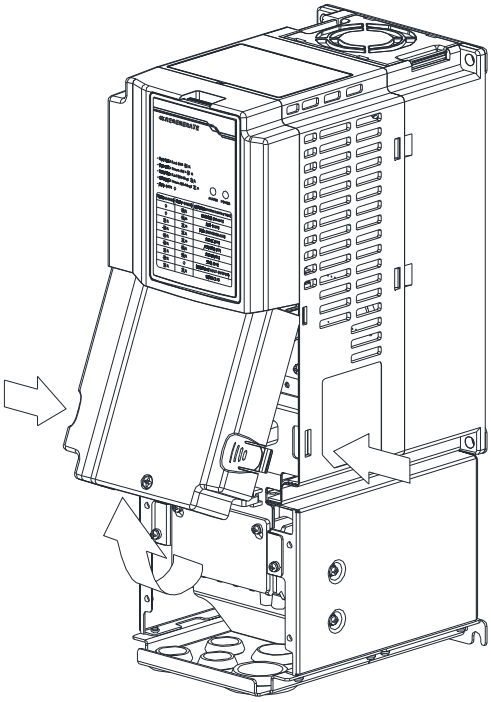

Frame A, B,

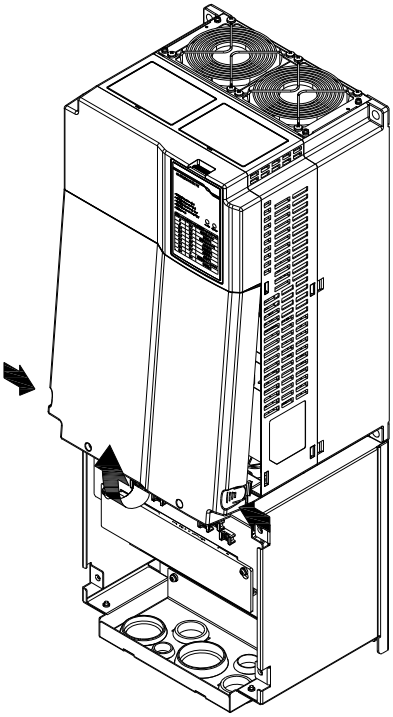

Frame C

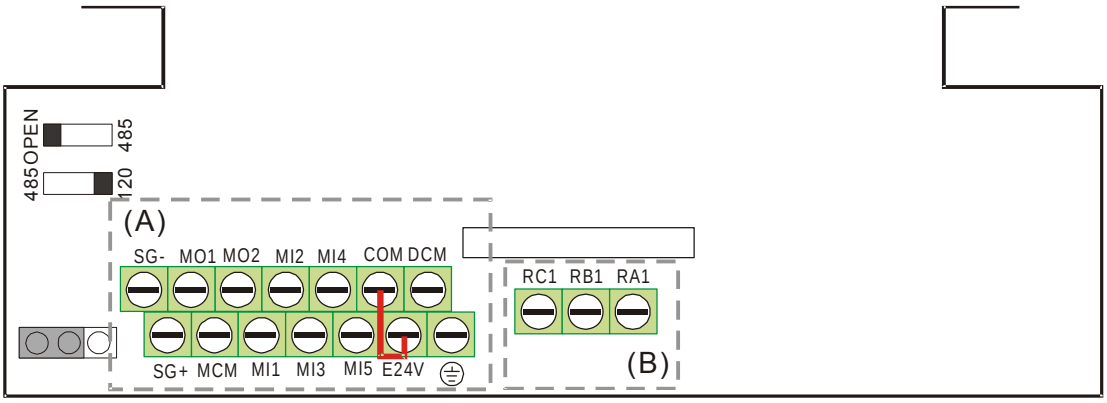

Control Terminal Specifications

Function name	Wire size					Screw size Tightening torque(±10%)
	Group	Conductor	Stripping length	Minimum wire size	Maximum wire size	
Control Terminal	A	Solid/Strand	6mm	0.2mm^2 [26AWG]	1.5mm^2 [16AWG]	5.1 Kg-cm [4.42 lb-in.] [0.5 Nm]
	B					5.6 Kg-cm [4.86 lb-in.] [0.55 Nm]

🕮 To set as auto mode without a keypad, the Power Regenerative Unit needs go through a multi-function input terminal (Mix, factory setting is MI1) to connect to the terminal DCM

Wiring notes:

- The factory setting for E24V-COM is short circuit and SINK mode (NPN); please refer to Diagram 1 in Wiring.

Terminal	Description of Function	Factory setting (NPN mode)
E24V	The factory setting for +24V-COM is short circuit and SINK mode (NPN); (Source)	+24V±5% 200mA
COM	Digital control signal common (Sink)	Common for multi-function input terminals
MI1 ~ MI5	Multi-function input 1-5	Refer to parameters 02-00 - 02-04 to program the multi-function inputs MI1-MI5. ON: the activation current is 6.5mA ≧ 11Vdc; OFF: leakage current tolerance is 10μA ≦ 5Vdc
DCM	Common terminal for digital control signals (Sink)	Common terminal for multi-function input
MO1	Multi-function output 1 (photocoupler)	The Power Regeneration Unit releases various monitor signals, via transistor (open collector).
MO2	Multi-function output 2 (photocoupler)	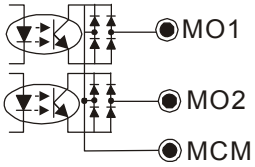
MCM	Multi-function Output Common	Max 48Vdc 50mA
RA1	Multi-function relay output 1 (N.O.) a	Resistive load 5A(N.O.)/3A(N.C.) 250VAC 5A(N.O.)/3A(N.C.) 30VDC N.O. minimum load: 5V/ 0.1A; 24V/ 3mA N.C. minimum load: 5V/ 0.1A; 24V/ 3mA Inductive load (COS 0.4) 2.0A(N.O.)/1.2A(N.C.) 250VAC 2.0A(N.O.)/1.2A(N.C.) 30VDC Outputs various monitoring signals. N.O. minimum load: 5V/ 0.1A; 24V/ 3mA N.C. minimum load: 5V/ 0.1A; 24V/ 3mA
RB1	Multi-function relay output 1 (N.C.) b	
RC1	Multi-function relay common	
SG+	Modbus RS-485	
SG-	PIN 1,2,7,8: Reserved PIN 3, 6: GND PIN 4: SG- PIN 5: SG+	

NOTE: Wire size of analog control signals: 18 AWG (0.75 mm^2) with shielded wire

Digital inputs (MI1~MI5, COM)

☑ When using contacts or switches to control the digital inputs, please use high quality components to avoid contact bounce.

Transistor output terminals (MO1, MO2, MCM)

☑ Make sure to connect the digital outputs to the right polarity.

☑ When connecting a relay to the digital outputs connect a surge absorber across the coil and check the polarity.

4-4 Display Panel Indicators

Display Panel:

警报(ALARM)	电源(POWER)	状态描述(STATUS DESCRIPTION)
○	R	准备完成(READY)
○	G	运转(RUN)
○	G	回生(REGENERATE)
R	R	过电压(OV)
R	G	外部错误(EF)
R	R	过负载(OL)
R	R	温度异常(OH)
R	○	过电流(OC)
R	R	通讯异常(Comm.Err.)
R	○	电源异常(MAINS Err.)
G	G	硬件 / 内存异常(HW Err.)

Power & Alarm Indicator Status Descriptions

ALARM	POWER	Description	Note
Blinking Red + Green lights	Blinking Red + Green lights	Prepare*	Once the Power Regenerative Unit is power on, it does auto system checking.
off	Consistent red light on	Ready**	Once the Power Regenerative Unit is power on. No fault and no warning occur; the user can send RUN command.
off	Consistent green light on	RUN**	Once the RUN command is sent, the Power Regenerative Unit is running smoothly and waiting for enough conditions to regenerate energy.
off	Blinking green light	REGENERATE**	Power Regenerative Unit regenerate AC current to the mains power.
ALARM	POWER	Description	Note
Consistent red light on	Blinking red light	OV(over voltage)	ovn, ovs
Consistent red light on	Blinking green light	EF (External Fault)	EF
Consistent red light on	Consistent red light on	OL (Over Load)	oL
Blinking red light	Consistent red light on	OH (Over Heat)	oH1, oH2, tH1o, tH2o
Consistent red light on	熄滅 off	OC (Over Current)	ocn, ocs
Blinking red light	Blinking red light	Comm. Err. (Communication Fault)	Pco, CE1, CE2, CE3, CE4, CE10, SE1, SE2, SE3
Blinking red light	off	Mains Err. (Mains Power Error)	Phase lose (OrP), phase lock (PLE) and low direct voltage (LvS) warning at input.
Blinking green light	Blinking green light	HW Err. (Hardware Fault)	cd1, cd2, cd3, Hd1, Hd2, 5VF, RYF, cF1, cF2

*The popup time is too short during the start up, so there is no description on the keypad.

**Different status of regeneration are defined in the diagram below.

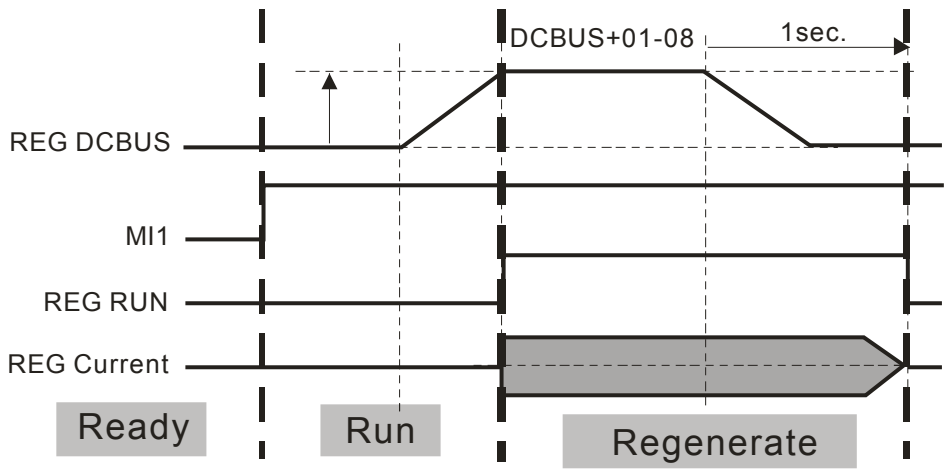

Figure 3: The Definition of Different Working Status of Power Regeneration.

05 Optional Accessories

The optional accessories listed in this chapter are available upon request. Installing additional accessories to your Power Regeneration Unit would substantially improves the unit's performance. Please select an applicable accessory according to your need or contact the local distributor for suggestion.

Optional Accessories:

5-1 Digital keypad

5-2 USB/RS485 Communication Interface IFD6530

5-3 Fuse Specification Chart

5-4 EMC filter

5-5 External Power Supply Card EMC-BPS01

5-6 Fan Kits

5-1 Digital Keypad

KPC-CC01

KPC-CE01

Communication interface

RJ-45 (socket), RS-485 interface;

Installation Method

☑ Embedded type and can be put flat on the surface of the control box. The front cover is water proof.

Keys	Description
ESC	**ESC Key** Press ESC key to return to the previous page. It also functions as a return to last category key in the sub-menu.
MENU	**Menu Key** Press MENU key under any condition will return to the main MENU. Menu content: 1. Parameter Detail 3. Keypad locked 2. Copy Parameter 4. PLC function
ENTER	**ENTER Key** Press ENTER and go to the next level. If it is the last level then press ENTER to execute the command.
HAND	No assigned function
AUTO	No assigned function
FWD/REV	No assigned function
RUN	**Start Key** ☑ It is only valid when the source of operation command is from the keypad. ☑ Press the RUN key, the drive will according to the start-up setting and the RUN LED will be ON. ☑ RUN key can be pressed for many times when the Power Regeneration Unit is in stop status.
STOP/RESET	**Stop Key** ☑ **<u>STOP key has the highest priority in command.</u>** ☑ Press STOP key, the Power Regenerative Unit will come to stop under any condition. ☑ The RESET key can be used to reset the Power Regenerative Unit when faults occur. If the RESET key is not responding, check MENU → Fault Records and check the most recent fault.

Description of LED status on the digital keypad

RUN	STOP	Description	Note
Consistently on	Blinking	Prepare	Once the Power Regenerative Unit is power on, it does auto system checking.
Off	Consistently on	Ready*	Once the Power Regenerative Unit is power on. No fault and no warning occur; the user can send RUN command.
Blinking	Consistently on	RUN*	Once the RUN command is sent, the Power Regenerative Unit is running smoothly and waiting for enough conditions to regenerate energy.
Consistently on	Off	REGENERATE*	Power Regenerative Unit regenerate AC current to the mains power.

*See Figure 3: The Definitions of Different Working Status of Power Regeneration.in section 4-4.

KPC-CC01& KPC-CE01 Dimension

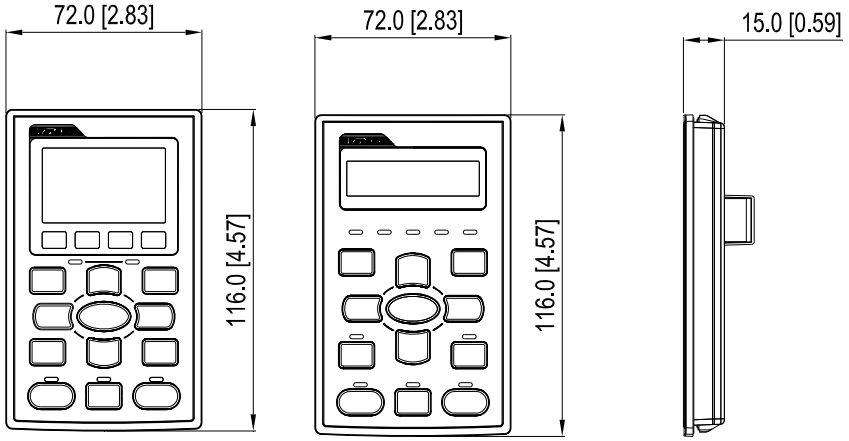

Optional RJ45 extension cable for the digital keypad

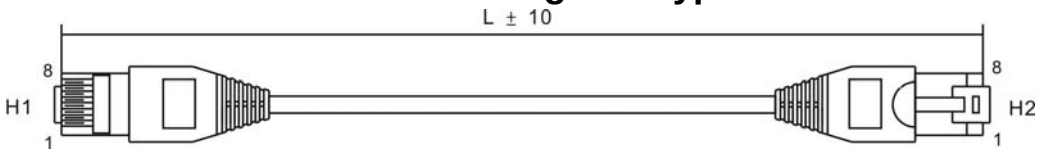

Title	Part No.	L	
		mm	inch
1	UC-CMC003-01A	300	11.8
2	UC-CMC005-01A	500	19.6
3	UC-CMC010-01A	1000	39
4	UC-CMC015-01A	1500	59
5	UC-CMC020-01A	2000	78.7
6	UC-CMC030-01A	3000	118.1
7	UC-CMC050-01A	5000	196.8
8	UC-CMC100-01A	10000	393.7
9	UC-CMC200-01A	20000	787.4

The Power Regenerative Unit is controlled by an external terminal Mix.

If you need the Power Regenerative Unit to be controlled by the keypad, here is what to do:

1. Control by the digital keypad:

   Set Pr01-04 =2 to change to the digital keypad as the source of operation command.

2. Control by an external terminals (factory setting: MI1):

   Set Pr01-04 =1 to change to the external terminals as the source of operation command.
   Then the activation level of the Power Regenerative Unit will be determined by the voltage level.
   So it will not be necessary to unplug and reconnect the external terminals.

📖 How to remove the plastic cap?

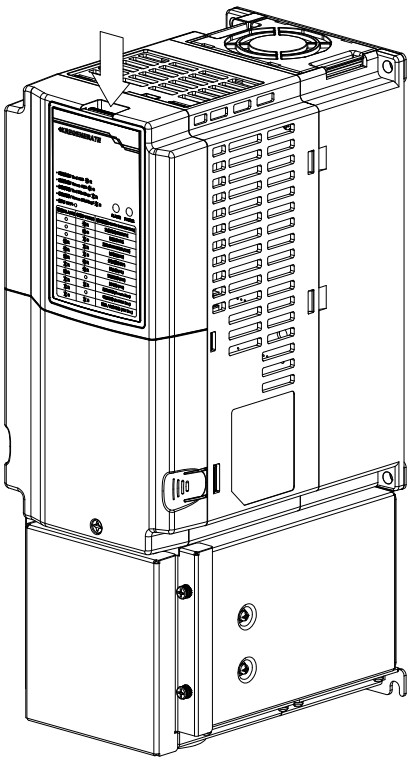

1. Press the pin on top of the keypad.

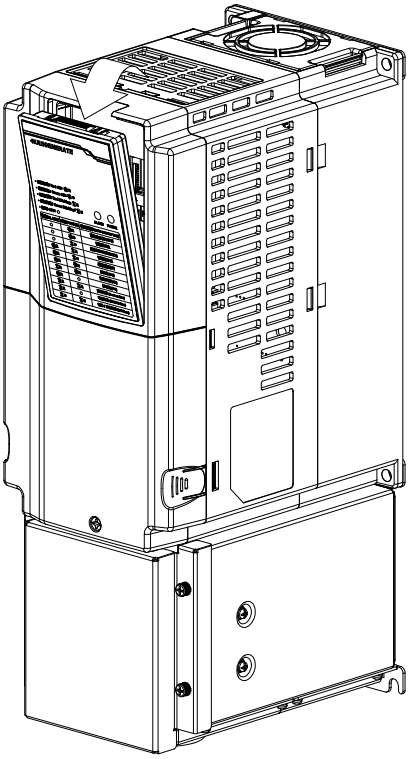

2. Pull forward to remove the keypad.

5-2 USB/RS-485 Communication Interface IFD6500, IFD6530

⚠ Caution

✓ Please thoroughly read this instruction sheet before installation and putting it into use.
✓ The content of this instruction sheet and the driver file may be revised without prior notice. Please consult our distributors or download the most updated instruction/driver version at http://www.delta.com.tw/product/em/control/cm/control_cm_main.asp

Description

IFD6530 is a convenient RS-485-to-USB converter, which does not require external power-supply and complex setting process. It supports baud rate from 75 to 115.2kbps and auto switching direction of data transmission. In addition, it adopts RJ-45 in RS-485 connector for users to wire conveniently. And its tiny dimension, handy use of plug-and-play and hot-swap provide more conveniences for connecting all DELTA IABU products to your PC.

Applicable Models: All DELTA IABU products.

■ Applications and Dimensions

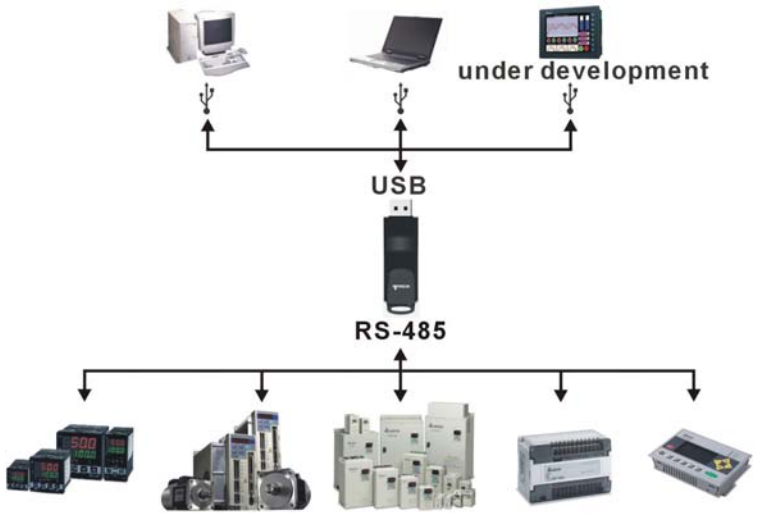

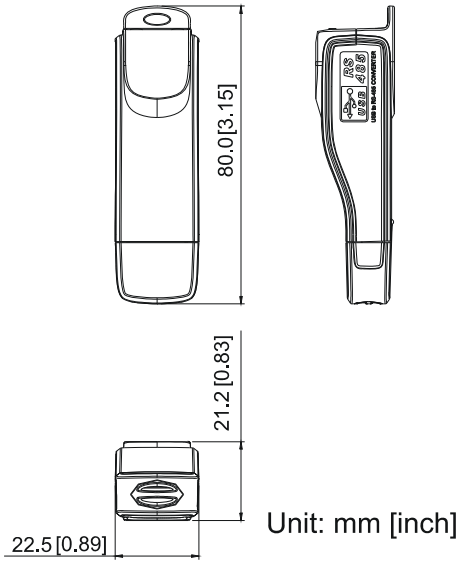

Functional Specifications

Power supply	No external power is needed
Power consumption	1.5W
Isolation voltage	2,500VDC
Baud rate	75,150,300,600,1,200,2,400,4,800,9,600,19,200,38,400,57,600,115,200 bps
RS-485 connector	RJ-45
USB port	A type (plug)
Compatibility	Full compliance with USB V2.0 specification
Max. cable length	RS-485 Communication Port: 100 m
Support RS-485 half-duplex transmission	

RJ-45

⇒ 8←1

RJ-45

PIN	Description		PIN	Description
1	Reserved		5	SG+
2	Reserved		6	GND
3	GND		7	Reserved
4	SG-		8	+9V

Preparations Before Driver Installation

Please extract the driver file (IFD6530_Drivers.exe) by following steps. You could find driver file (IFD6530_Drivers.exe) in the CD supplied with IFD6530.

✐Note: DO NOT connect IFD6530 to PC before extracting the driver file.

STEP 1

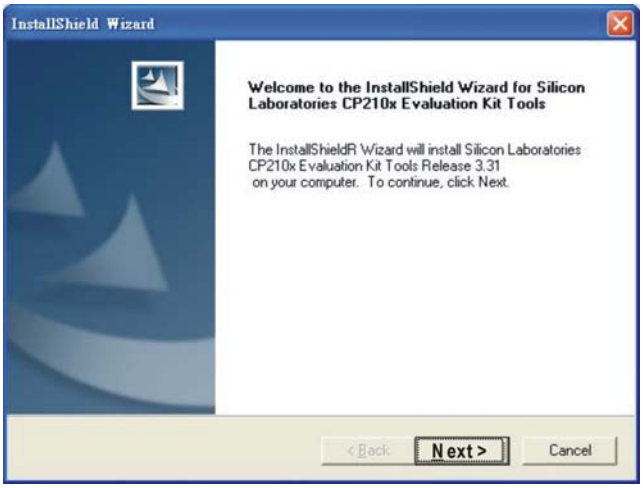

STEP 2

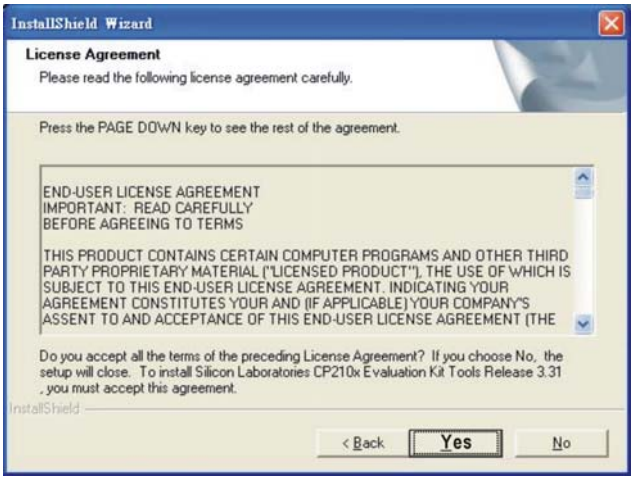

STEP 3

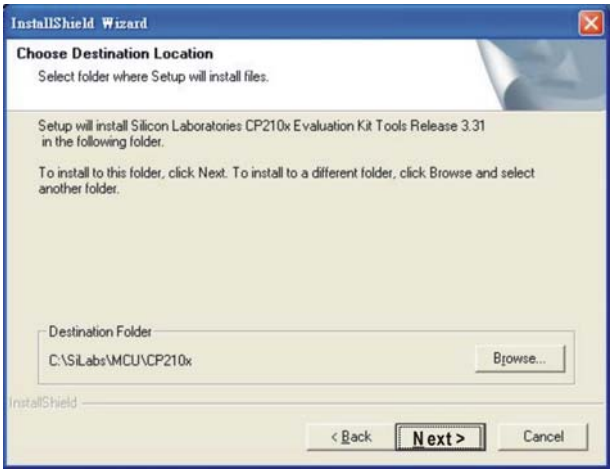

STEP 4

STEP 5

You should have a folder marked SiLabs under drive C. c:\ SiLabs

Driver Installation

After connecting IFD6530 to PC, please install driver by following steps.

STEP 1

STEP 2

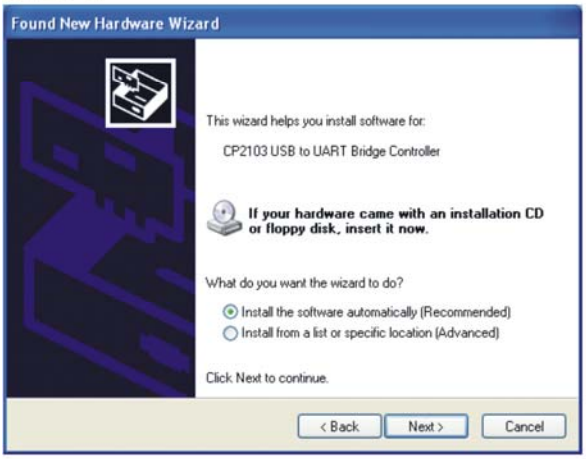

OR

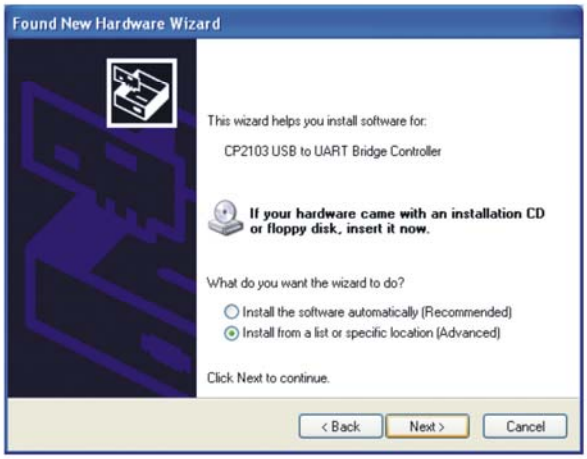

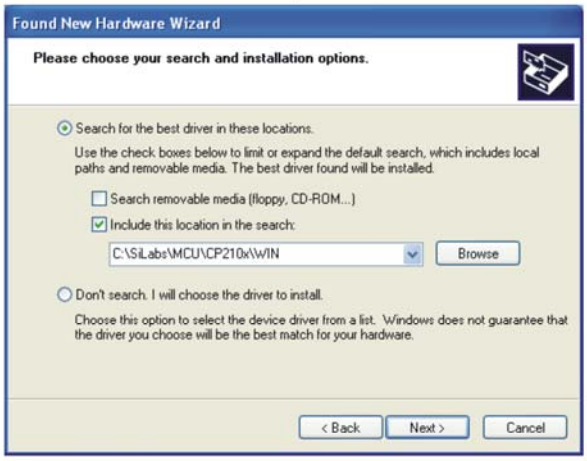

Browse and select directory, or enter C:\SiLabs\MCU\CP210x\WIN

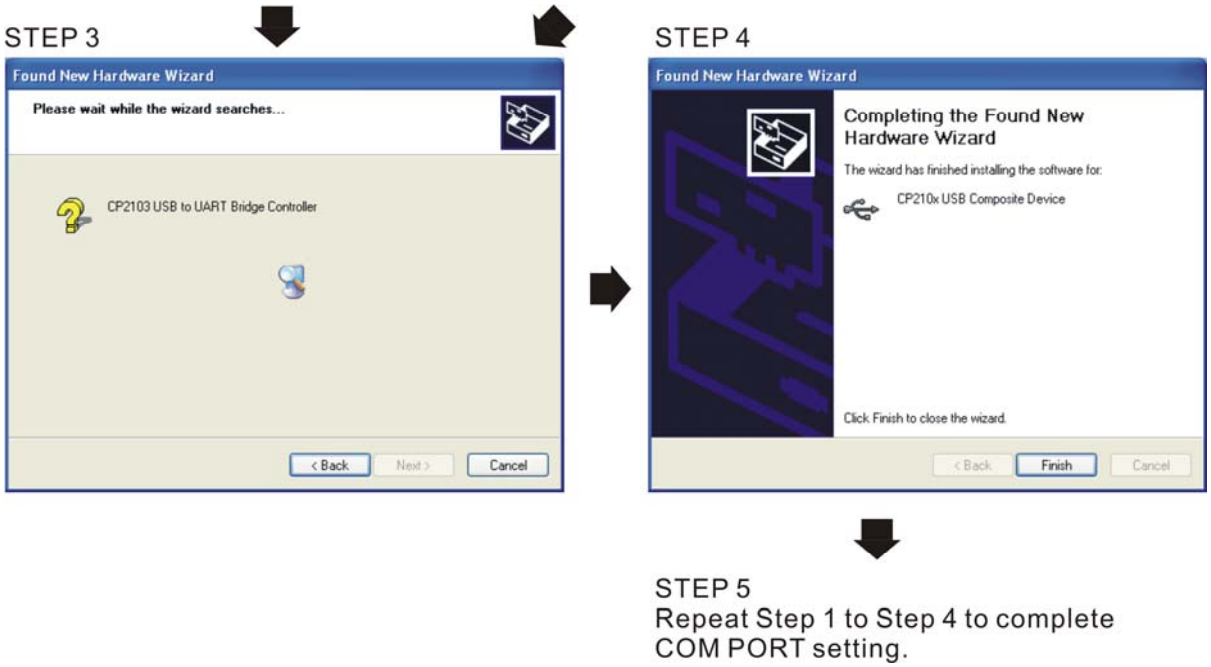

LED Display

1. Steady Green LED ON: power is ON.
2. Blinking orange LED: data is transmitting.

5-3 Fuse Specification Chart

- ☑ The fuses with amperes smaller than the those listed in the table below are allowed.
- ☑ Use only the fuses comply with local regulations.
- ☑ Use UL certified fuses to do short-circuit protection. The branch circuits have to comply with NEC (National Electrical Code) and local regulations in the USA. Choose UL certified fuses to comply with local regulations.
- ☑ The branch circuit has to comply with CEC (Canadian Electrical Code) and local regulations. Choose UL certified fuses to comply with local regulations.
- ☑ See section 4-1 Wiring Diagram for installation of fuses.

Frame A	
Model No.	Ampere
REG075A23A-21	50
REG110A23A-21	80
REG075A43A-21	25
REG110A43A-21	45
REG150A43A-21	50

Frame B	
Model No.	Ampere
REG150A23A-21	100
REG185A23A-21	125
REG220A23A-21	150
REG185A43A-21	60
REG220A43A-21	80
REG300A43A-21	100

Frame C	
Model No.	Ampere
REG300A23A-21	200
REG370A23A-21	250
REG370A43A-21	125
REG450A43A-21	150
REG550A43A-21	200

5-4 EMC Filter

Functions:

In order to suppress the interference of high frequency after the Power Regenerative Unit is installed on a power system, it is strongly recommended to install an EMC filer.
With the installation of an EMC filter (suppressing electro-magnetic interference and radio frequency interference (CLASS A/3m)), Power Regenerative Unit still complies with EN55011 regulations.

Specifications:

Input Voltage:

230V series: 170~ 265Vac, input from main circuit terminals L1, L2, L3.
460V series: 323!~528Vac, input from main circuit terminals L1, L2, L3.

Input Frequency:

50Hz(47~53) / 60Hz(57~63)

Input Current:

Model	Rated Current when Running Continuously (Arms)
RG-EF110A2	25.6
RG-EF220A2	48
RG-EF370A2	80
RG-EF150A4	16
RG-EF300A4	34.4
RG-EF550A4	60

📖 With Variation of ED%, a Power Regenerative Unit can still function normally when overloading. The rated output current of the EMC filter corresponds to that of the Power Regenerative Unit. Therefore, follow the table below to select an EMC filter. Delta ensures that all EMC filters are within output current specification.

📖 Since there are many conditions and changes at the installation site of a Power Regenerative Unit, only the rated current during continuous regeneration is listed in the table below. Because the temperature rising during the continuous running is the harshest environment for the electronic components.

EMC filter specifications

Frame	REG2000 Model	REG EMC Filter	Weight(kg)
A	REG075A23A-21	RG-EF110A2	3.2±0.5
	REG110A23A-21		
B	REG150A23A-21	RG-EF220A2	4.8±0.5
	REG185A23A-21		
	REG220A23A-21		
C	REG300A23A-21	RG-EF370A2	6.0±0.5
	REG370A23A-21		
A	REG075A43A-21	RG-EF150A4	3.2±0.5
	REG110A43A-21		
	REG150A43A-21		
B	REG185A43A-21	RG-EF300A4	4.8±0.5
	REG220A43A-21		
	REG300A43A-21		
C	REG370A43A-21	RG-EF550A4	6.0±0.5
	REG450A43A-21		
	REG550A43A-21		

Model	3-Phase Wiring Specification		Grounding Terminals		Torque (±10%)
	Max. Wiring Diameter	Min. Wiring Diameter	Max. Wiring Diameter	Min. Wiring Diameter	
REG2000/ EMC filter/ Frame A					
RG-EF110A2	8 AWG (10 mm^2)	8 AWG (10mm^2)	8 AWG (10 mm^2)	8 AWG (10 mm^2)	M4 18 kg-cm (15.6 lb-in) (1.7Nm)
RG-EF150A4		10 AWG (6mm^2)	10 AWG (6 mm^2)	10 AWG (6 mm^2)	
REG2000/ EMC filter/ Frame B					
RG-EF220A2	4 AWG (25 mm^2)	4 AWG (25 mm^2)	4 AWG (25 mm^2)	6 AWG (16 mm^2)	M5 36 kg-cm (31 lb-in) (3.4 Nm)
RG-EF300A4		4 AWG (25 mm^2)	4 AWG (25 mm^2)	6 AWG (16 mm^2)	
REG2000/ EMC filter/ Frame C					
RG-EF370A2	1/0 AWG (50 mm^2)	1/0 AWG (50 mm^2)	1/0 AWG (50 mm^2)	4 AWG (25 mm^2)	M6 70 kg-cm (61 lb-in) (6.9 Nm)
RG-EF550A4		2 AWG (35 mm^2)	2 AWG (35 mm^2)	6 AWG (16 mm^2)	

※ If you install in an environment of 40 ºC ambient temperature, select copper wires which are resistant to 75ºC or 90ºC and support 600V rated voltage.

※ If you install in an environment of above 40 ºC ambient temperature, select copper wires which are resistant to 90ºC or above 90ºC and support 600V rated voltage.

※ To comply with UL standard, copper wires are required for installation. According to UL, the wire gauge of copper wires has to be resistant to 75ºC. Do NOT reduce the wire gauge when choosing high temperature resistant copper wires.

※ Please refer to 4-1 Wiring Diagram for more wiring details.

※ To avoid any interference, it is strongly recommended to install the EMC filter on the Power Regenerative Unit for different application and in installation site.

Wiring Terminals Specifications

Unit: mm

AWG	VENDOR	P/N	A (MAX.)	B (MAX.)	C (MIN.)	D (MAX.)	d2 (MIN.)	E (MIN.)	F (MIN.)	W (MAX.)	t (MAX.)
10	K.S.T	RNB22-8	40.0	11.0	9.5	22.0	8.3	13.0	11.0	24.0	2.5
8	K.S.T	RNBS38-8									
6	K.S.T	RNB14-8									
4	K.S.T	RNB22-8									
2	K.S.T	RNB38-8									
1/0	K.S.T	RNB60-8									

- Follow Figure 1 to choose wiring size of terminals
- As shown in Figure 2, insulated heat shrink tuning should be at least 600Vac resistant to comply to UL and CSA regulations (600Vac, YDPU2).

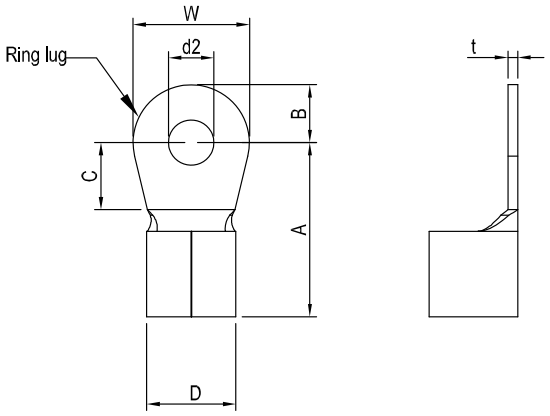

Figure 1.

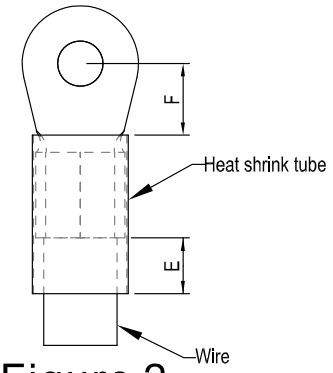

Figure 2.

EMC Dimension Diagrams

[Frame A] RG-EF110A2; RG-EF150A4

Wiring Gauge: AWG 22~8

MODEL:
RG-EF110A2
RG-EF150A4

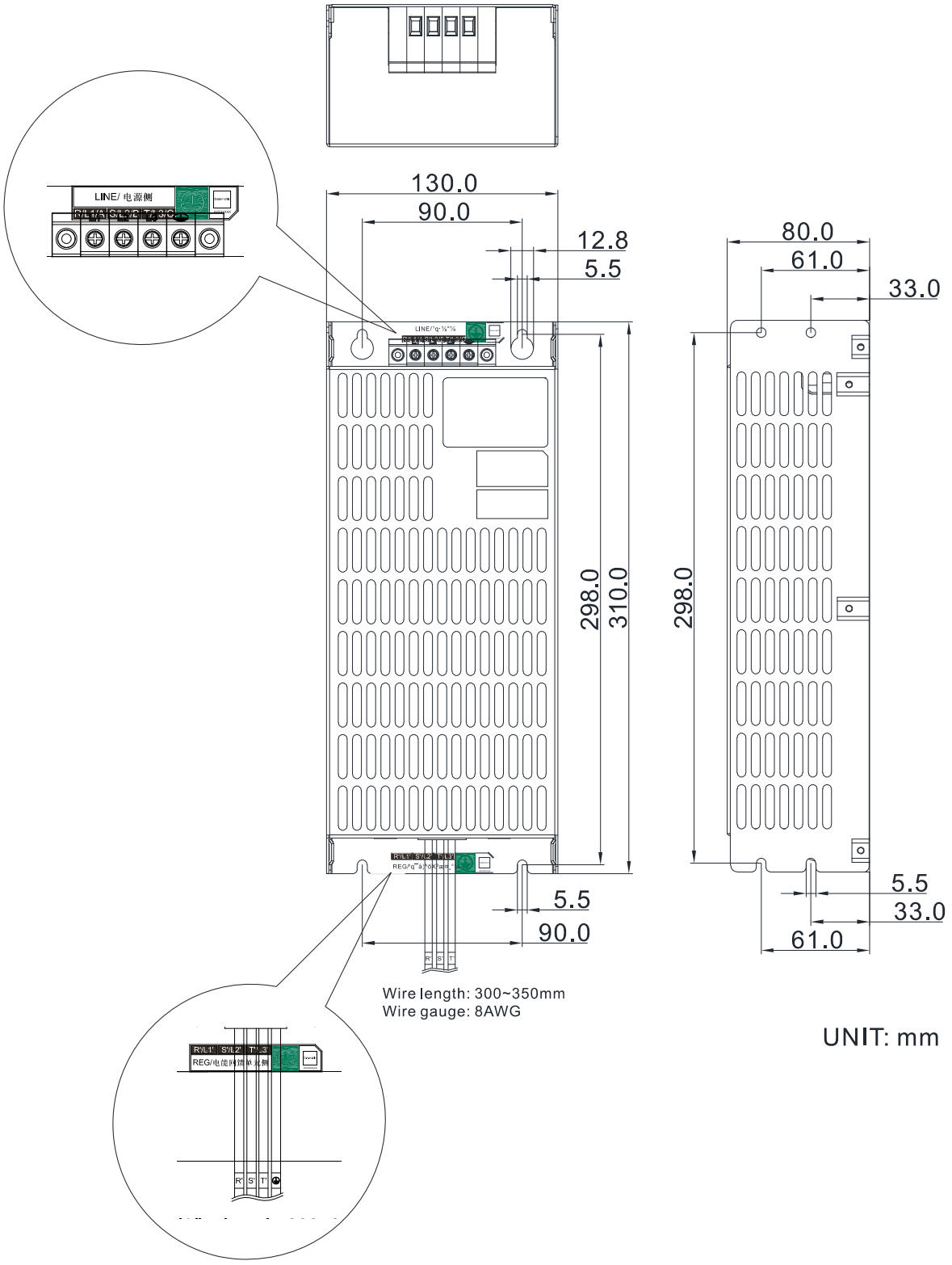

NOTE: It needs following additional terminal when wiring. The additional terminal dimension should comply with the field wire(8 AWG) and figure 1.

After crimping the wire to the ring lug, UL approved R/C (YDPU2) heat shrink tubing rated min 600Vac insulation shall be install over the live part . Refer to the figure 2.

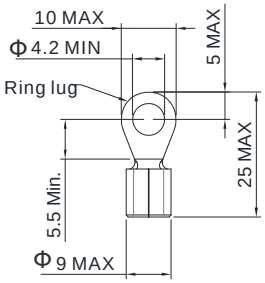

Figure 1.

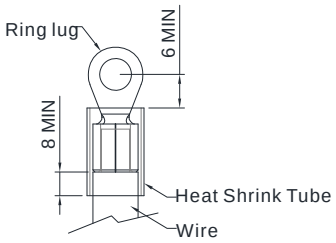

Figure 2.

Copper wire of 8 AWG wiring gauge needs another wiring terminal. If you need to use ring terminals, please follow the requirements below:

- Use UL certified heat shrinkable tube (600V, YPDU2).
- Use copper wire resistant to voltage 600V, temperature 75 ºC or 90 ºC.
- RG-EF110A2 and RG-EF220A2 requires copper wires which are resistant to 90 ºC.

[Frame B] RG-EF220A2; RG-EF300A4;

Wiring Gauge: AWG 14~3

MODEL:
RG-EF220A2
RG-EF300A4

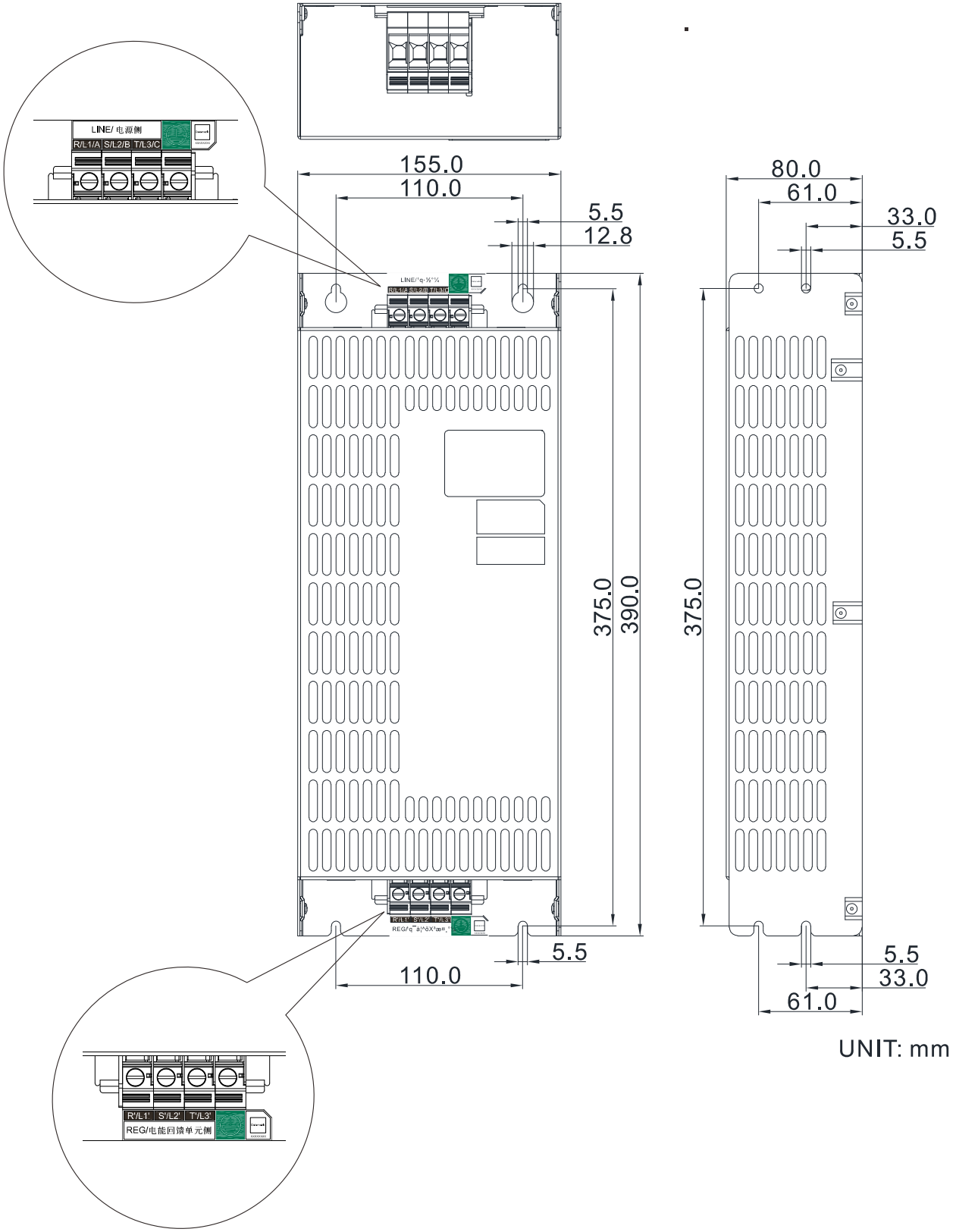

NOTE: It needs following additional terminal when wiring. The additional terminal dimension should comply with the field wire(8 AWG) and figure 1.

After crimping the wire to the ring lug, UL approved R/C (YDPU2) heat shrink tubing rated min 600Vac insulation shall be install over the live part . Refer to the figure 2.

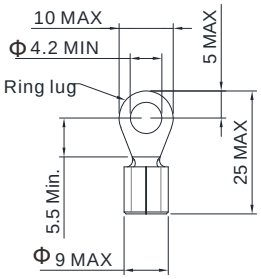

Figure 1.

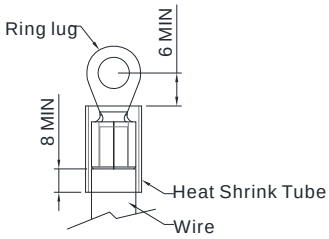

Figure 2.

Copper wire of 8 AWG wiring gauge needs another wiring terminal. If you need to use ring terminals, please follow the requirements below:

- Use UL certified heat shrinkable tube (600V, YPDU2).
- Use copper wire resistant to voltage 600V, temperature 75 ºC or 90 ºC.
- RG-EF110A2 and RG-EF220A2 requires copper wires which are resistant to 90 ºC.

[Frame C] RG-EF370A2; RG-EF550A4

Wiring Gauge: AWG 12~1/0.

MODEL:
RG-EF370A2
RG-EF550A4

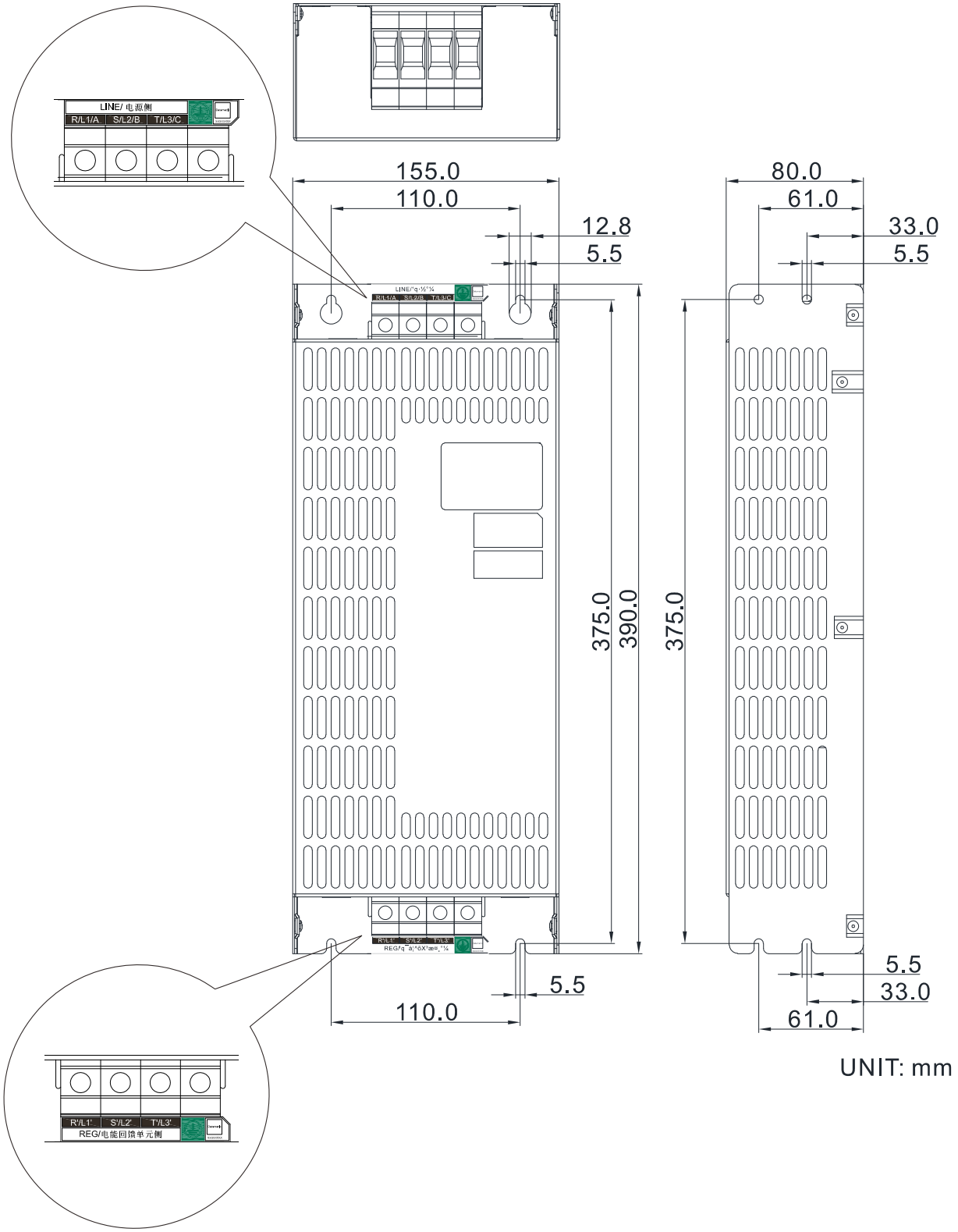

NOTE: It needs following additional terminal when wiring. The additional terminal dimension should comply with the field wire(8 AWG) and figure 1.

After crimping the wire to the ring lug, UL approved R/C (YDPU2) heat shrink tubing rated min 600Vac insulation shall be install over the live part . Refer to the figure 2.

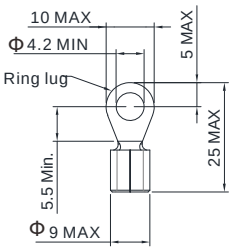

Figure 1.

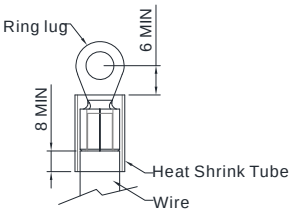

Figure 2.

Copper wire of 8 AWG wiring gauge needs another wiring terminal. If you need to use ring terminals, please follow the requirements below:

- Use UL certified heat shrinkable tube (600V, YPDU2).
- Use copper wire resistant to voltage 600V, temperature 75 ºC or 90 ºC.
- RG-EF110A2 and RG-EF220A2 requires copper wires which are resistant to 90 ºC.

5-5 External Power Supply Card(24V) EMC-BPS01

Installing EMC-BPS01:

Installation

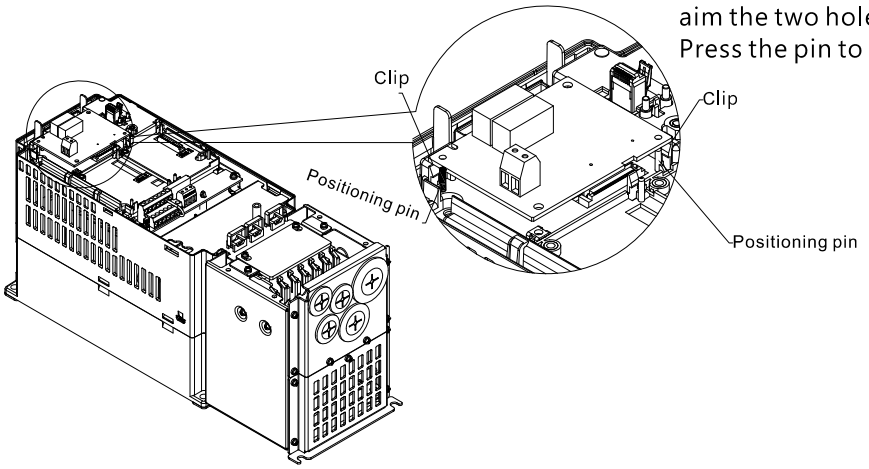

As shown in the figure on the left,
aim the two holes at the positioning pin.
Press the pin to clip the holes with the PCB

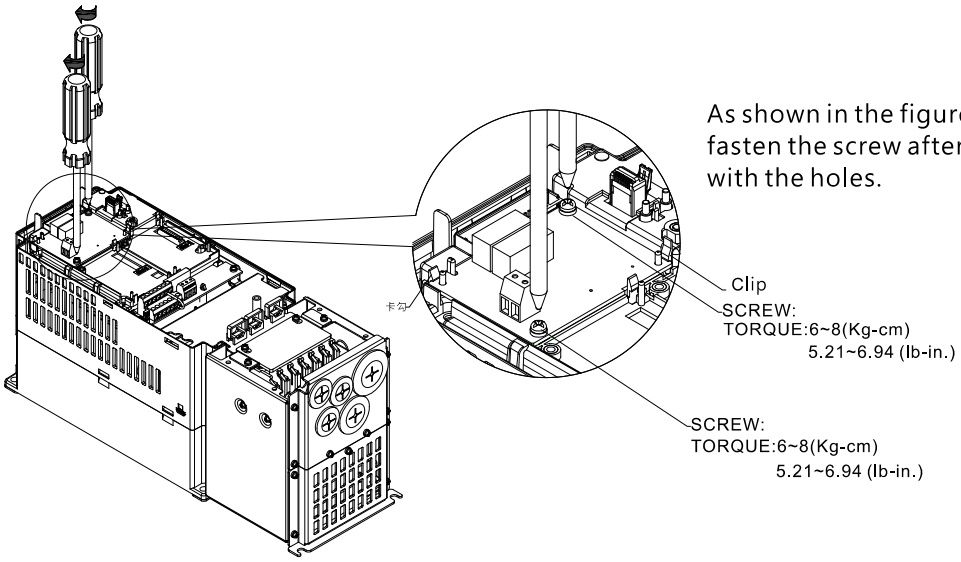

As shown in the figure on the left,
fasten the screw after the PCB is clipped
with the holes.

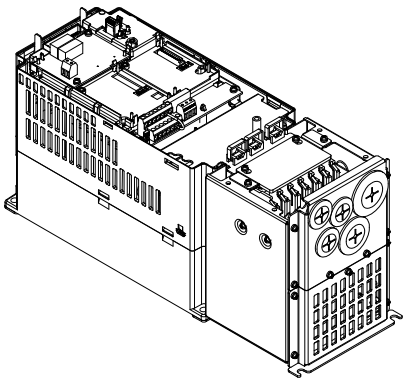

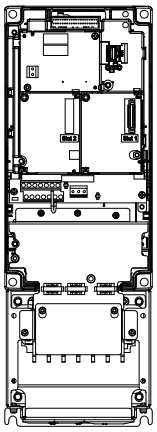

Removing EMC-BPS01

Removing

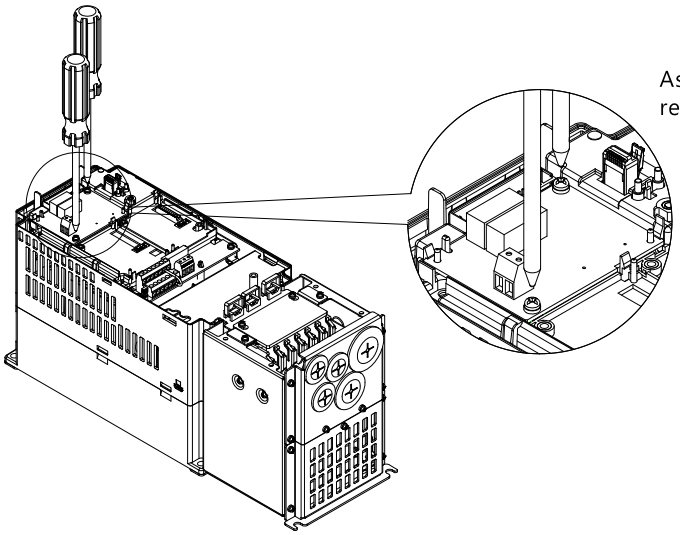

As shown in the figure on the left,
remove the two screws.

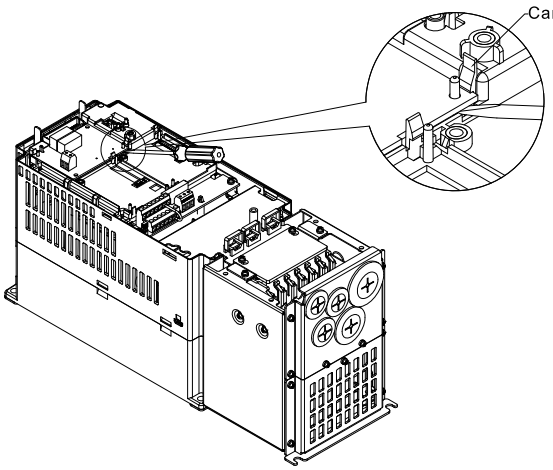

Twist to open the card clip,
insert a slot type screwdriver into
the hollow to prize the PCB off the card clip.

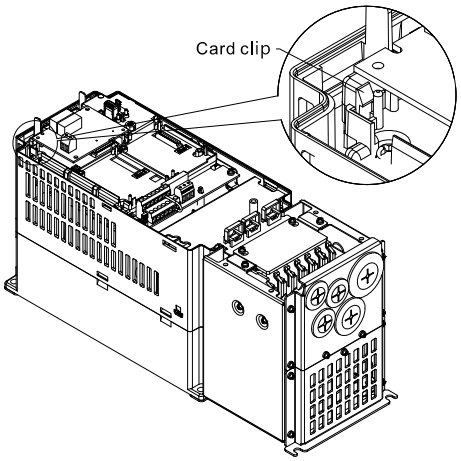

Twist to open the card clip
to remove the PCB.

EMC-BPS01

	Terminals	Descriptions
External Power Supply Card	24V GND	Input power: 24V±5% Maximum input current: 0.5A Note: 1) Do not connect the any control terminal on the Power Regenerative Unit to this +24V power terminal. 2) Do not connect terminal DCM on the Power Regenerative Unit to the EMC-BPS01 input terminal GND to keep insulation effective/
		Functions: When the EMC-BPS01 is the sole power supply of the Power Regenerative Unit, the communication can work normally and the functions below are supported: Read/ Write parameters. Support displaying of the keypad. Except the RUN key, other keys on the keypad can be operated. Effective analog input. Not support the following function (1) Relay output (RA1, RB1, RC1); (2) hot swapping

📖 Once the EMC-BPS01 is installed, set Pr03-05 =1 to enable this external power supply card.

📖 Multi-Input terminals (MI1~ MI5) needs external power supply to function.

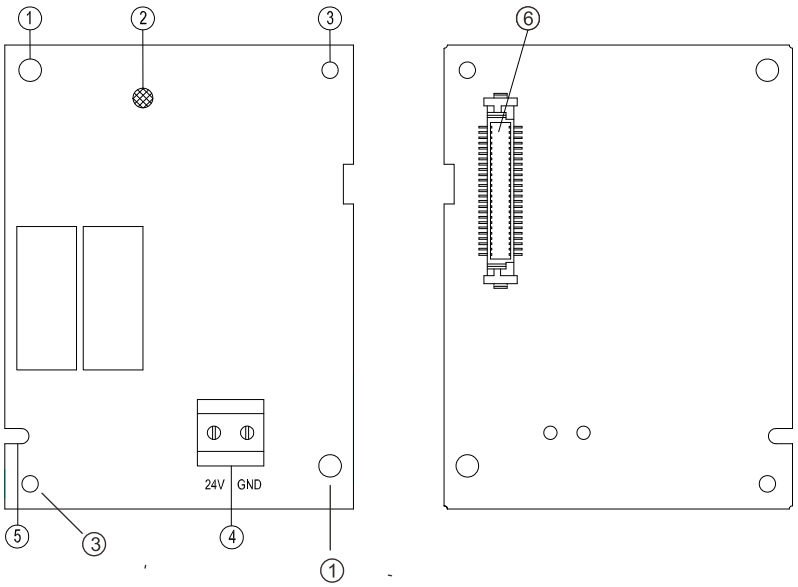

1. Screw fixing hole
2. Power indicator
3. Aligning hole
4. 24V-GND terminal
5. Fool proofing slot
6. Motor drive connecting port

Function	Wire size			Screw size Tightening torque (±10%)
	Conductor	Maximum wire size	Minimum wire size	
EMC-BPS01	Solid/Strand	0.5mm² [20AWG]	0.2mm² [24AWG]	5 Kg-cm [4.4 lb-in.] [0.5 Nm]

5-6 Fan Kits

■ Appearance of Cooling Fans

Frame A Applicable Models: REG075A23A-21, REG075A43A-21, REG110A23A-21, REG110A43A-21, REG150A43A-21	Cooling fan model name: 『RG-FK00AAN』 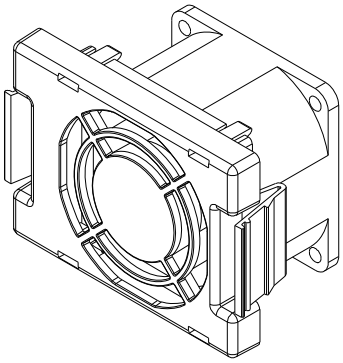
Frame B Applicable Models: REG150A23A-21. REG185A23A-21, REG185A43A-21, REG220A23A-21, REG220A43A-21, REG300A43A-21	Cooling fan model name: 『RG-FK00BAN』 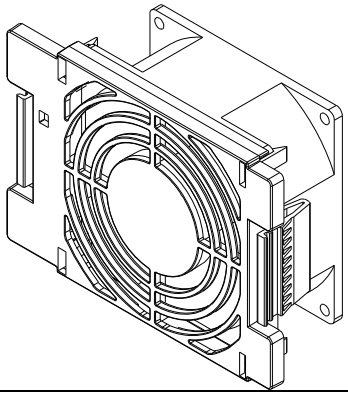
Frame C Applicable Models: REG370A23A-21, REG450A43A-21, REG550A43A-21	Capacitance cooling fan model name: 『MKC-CFKB1』 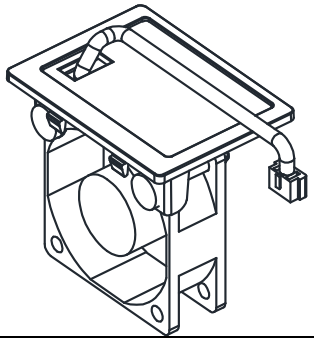
Frame C Applicable Models REG300A23A-21, REG370A23A-21, REG370A43A-21, REG450A43A-21, REG550A43A-21	Cooling fan model name: 『RG-FK00CAN』 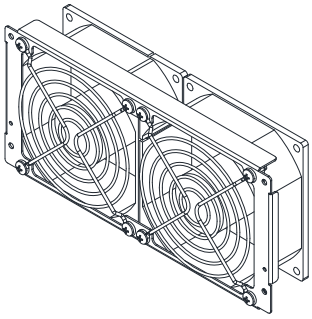

■ Removing Cooling Fans

Frame A

Cooling fan model name 『RG-FK00AAN』

Applicable Models:

REG075A23A-21, REG075A43A-21, REG110A23A-21, REG110A43A-21, REG150A43A-21

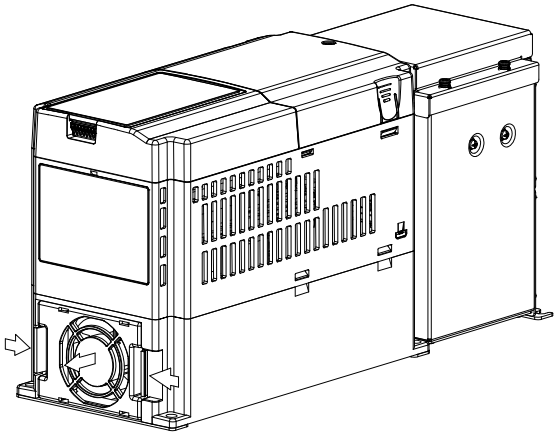

Press the tab on the right and the left to remove the cover

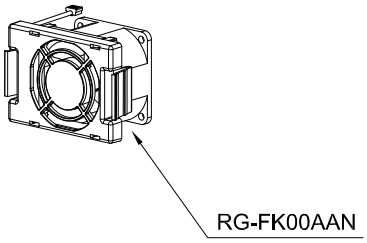

The connecting point of cooling fan's power line is on the left.

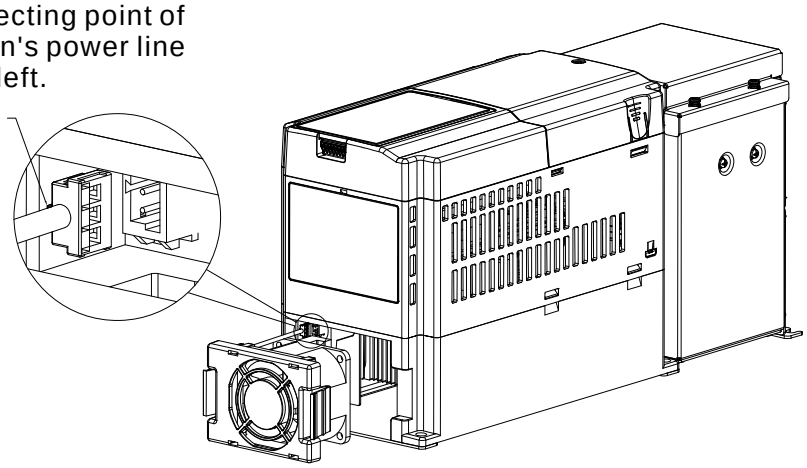

Frame B

Cooling fan model name『RG-FK00BAN』

Applicable Models:

REG150A23A-21, REG185A23A-21, REG185A43A-21,

REG220A23A-21,REG220A43A-21, REG300A43A-21

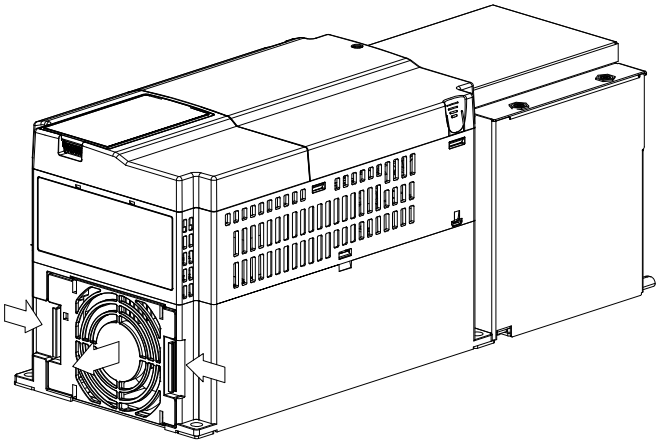

Press the tab on the right and
the left to remove the cover

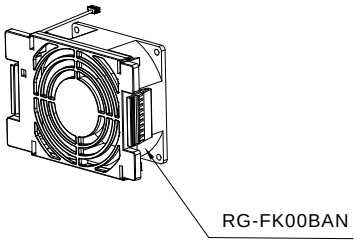

Place downward the connecting terminal of
the cooling fan's power line
to connect the cooling fan
to the Power Regenerative Unit.

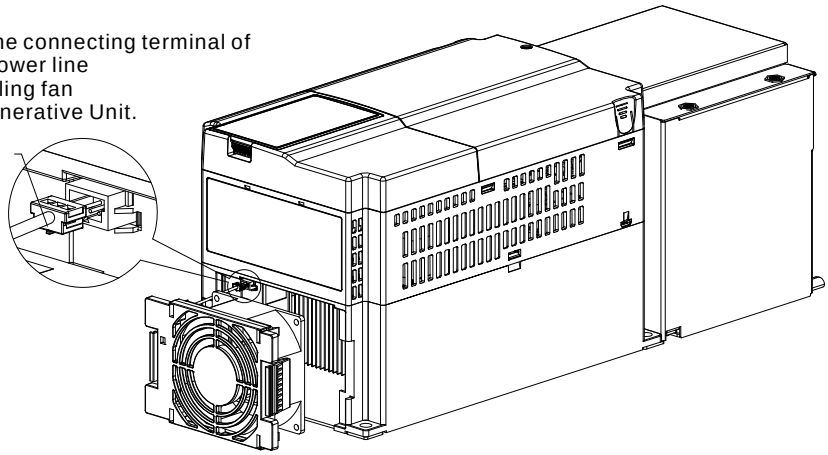

Frame C

Capacitance cooling fan model name『MKC-CFKB1』

Applicable Models:

REG370A23A-21, REG450A43A-21, REG550A43A-21

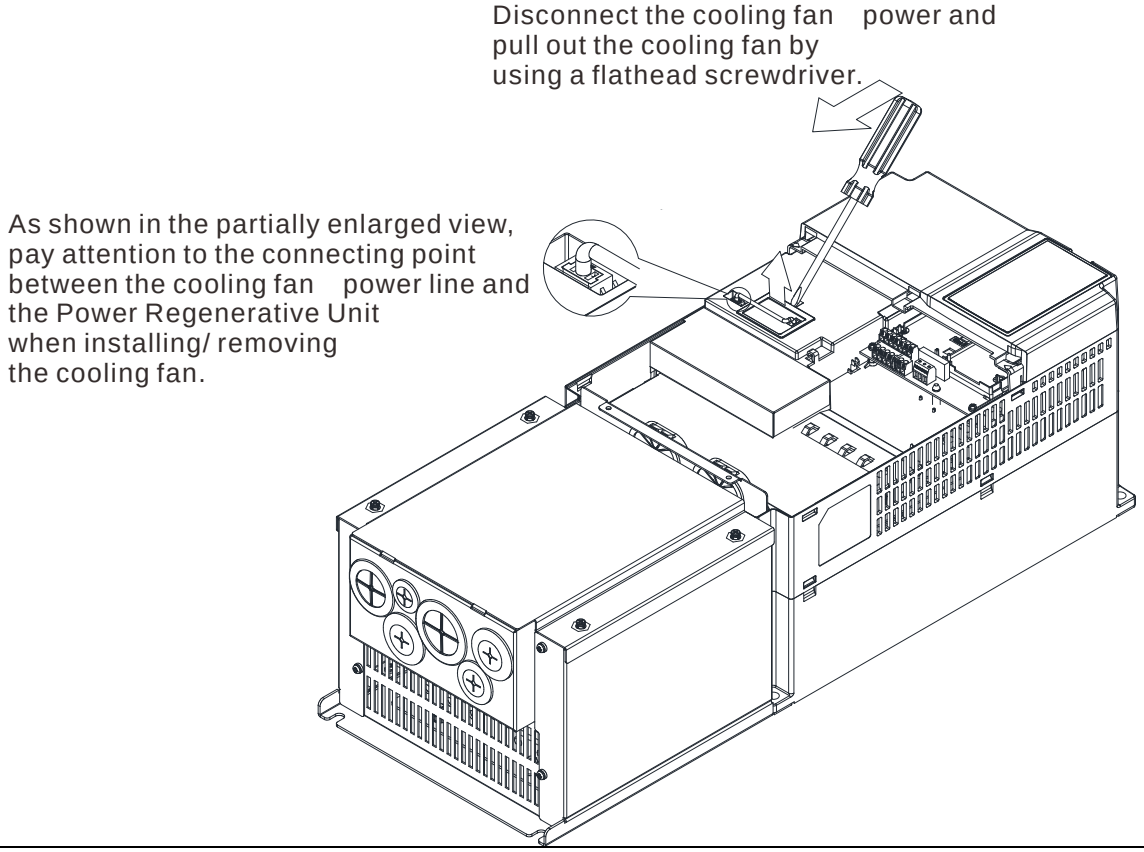

Frame C

Cooling fan model name 『RG-FK00CAN』

Applicable Models

REG300A23A-21, REG370A23A-21, REG370A43A-21, REG450A43A-21, REG550A43A-21

Disconnect the fan's power and pull out the fan by using a flathead screwdriver

(As shown in the partially enlarged view)

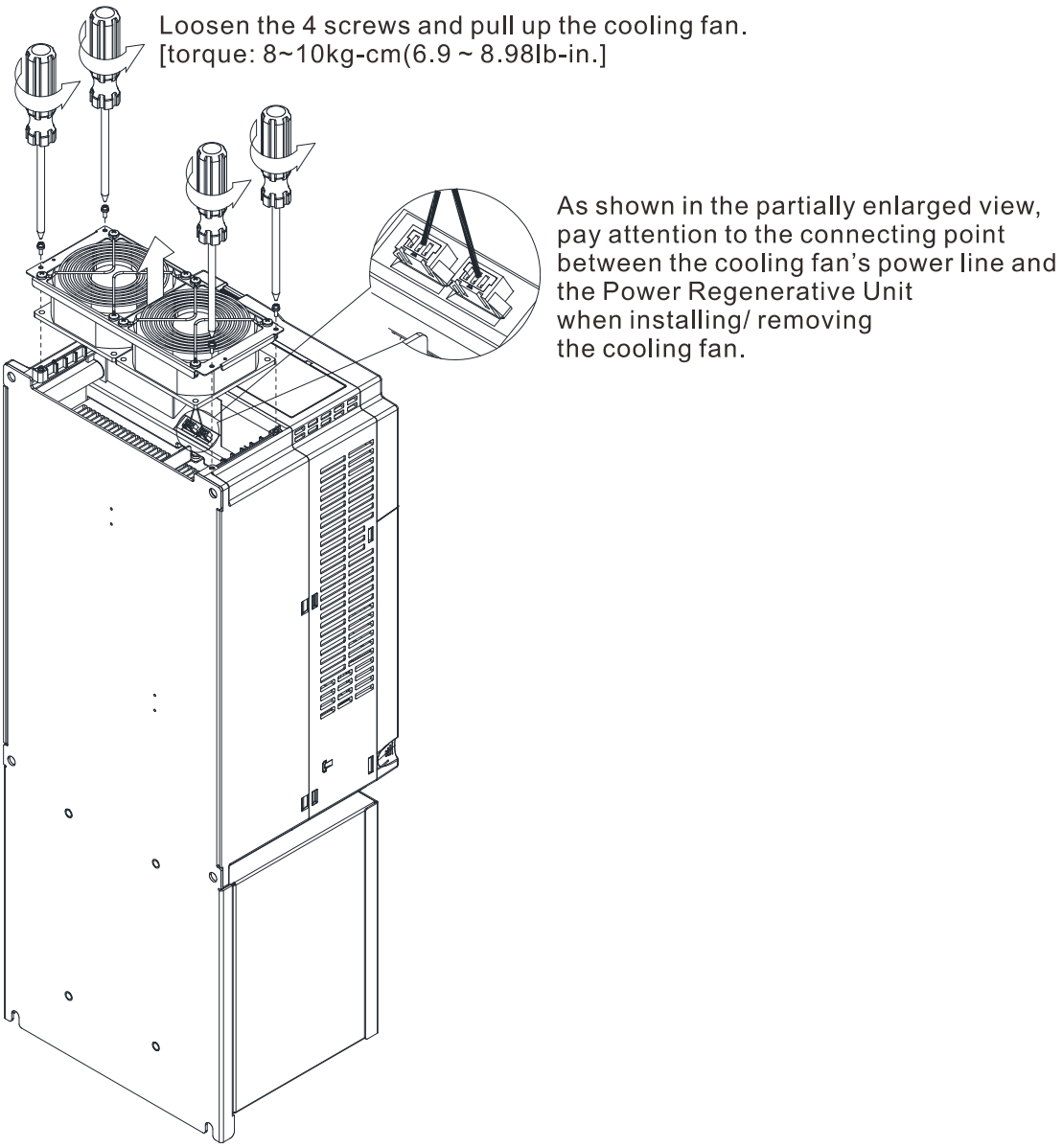

06 List of Parameters

Users can quickly look up the range and factory setting for each parameter, making it convenient to set parameter values on their own. Parameter values can be set, changed, or reset using the digital keypad (optional) or via communication ports.

NOTE

1）✓Parameter setting can be adjusted during operation.
2）For complete parameter descriptions, please refer to 07 Detailed Descriptions of Parameters.
3）When a Power Regenerative Unit is at <STOP>, which means it is not doing energy regeneration.

00 Display Parameters

Parameter codes	Parameter names	Setting range	Factory Setting
00-00	ID code of the Power Regenerative Unit	0: 230V, 7.5kW 1: 460V, 7.5Kw 2: 230V, 11kW 3: 460V, 11kW 4: 230V, 15kW 5: 460V, 15kW 6: 230V, 18.5kW 7: 460V, 18.5kW 8: 230V, 22kW 9: 460V, 22kW 10: 230V, 30kW 11: 460V, 30kW 12: 230V, 37kW 13: 460V, 37kW 15: 460V, 45kW 17: 460V, 55kW	Read Only
00-01	Display rated current of the Power Regenerative Unit	0: 20A 1: 10.5A 2: 32A 3: 17A 4: 38A 5: 20A 6: 49A 7: 25A 8: 60A 9: 32A 10: 80A 11: 43A 12: 100A	Read Only

Parameter codes	Parameter names	Setting range	Factory Setting
		13: 49A 15: 60A 17: 75A	
00-02	Software version	Read Only	Read Only
00-03	Display input current of the Power Regenerative Unit (AAC)	Read Only	Read Only
00-04	Display mains frequency (Hz)	Read Only	Read Only
00-05	Display DC voltage (VDC)	Read Only	Read Only
00-06	Display power (kW)	-300.0 ~ 300.0	Read Only
00-07	Reserved		
00-08	Reserved		
00-09	Display the lower value of kilowatt hours (kWh) regenerated by REG2000	0.0 ~ 999.9	Read Only
00-10	Display the higher value of kilowatt hours (kWh) regenerated by REG2000	0 ~ 9999	Read Only
00-11	Display the highest ambient temperature (°C) (air outlet)	Read Only	Read Only
00-12	Display the highest IGBT temperature (°C)	Read Only	Read Only
00-13	Display internal temperature (°C) (air outlet)	Read Only	Read Only
00-14	Display power module's temperature (°C)	Read Only	Read Only
00-15	Display the ON/OFF status of digital input	Read Only	Read Only
00-16	Display the ON/OFF status of digital output	Read Only	Read Only
00-17	DC voltage during a malfunction (VDC)	Read Only	Read Only
00-18	Mains frequency during a malfunction (Hz)	Read Only	Read Only
00-19	Current during a malfunction (A)	Read Only	Read Only
00-20	Error log 1	0: no error records	0
00-21	Error log 2	3: ocn overcurrent during operation	0

Parameter codes	Parameter names	Setting range	Factory Setting
00-22	Error log 3	6: ocs overcurrent between operations	0
00-23	Error log 4	9: ovn overvoltage during operation	0
00-24	Error log 5	10: ovs overvoltage between operations	0
00-25	Error log 6	15: OrP open-phase in output	0
		16:oH1 power module overheated	
		17: oH2 internal ambient temperature overheated (air outlet)	
		18 : tHo1 power module overheated protection circuit error	
		19 : tHo2 internal ambient temperature overheated protection circuit error	
		21: oL overload	
		30: cF1 memory write error	
		31: cF2 memory read error	
		37 : (Current detection error (over current) when powering on	
		38 : Voltage detection error (over voltage) when powering on.	
		42 : 5V control board error (firmware v.1.02 (included) and later.	
		43 : Relay error (firmware v.1.02 and later	
		49 : External signal input error	
		52 : Pcod Wrong Password	
		54 : cE1 Communication error	
		55 : cE2 Communication error	
		56 : cE3 Communication error	
		57 : cE4 Communication error	
		58 : cE10 Communication time out	
		66 : PLE Phase lock error	
00-26	Low word in electricity bill		Read Only
00-27	High word in electricity bill		Read Only
00-28	Displays input AC voltage (VAC)		Read Only

01 Basic Parameters

Parameter codes	Parameter names	Setting range	Factory Setting
01-00	Reset parameters	0: no function 1: parameter cannot be written 10: parameter reset	0
✓01-01	Select startup display	0: mains frequency 1: DC side voltage(VDC) 2: Output current(AAC)	0
✓01-02	Enter parameter protection password	1~9998,10000~65535 0-2: number of incorrect passwords entered	0
✓01-03	Set parameter protection password	1~9998,10000~65535 0: password not set or password entered successfully in Pr01-02 1: parameters locked	0
✓01-04	Set source of operation command	1: operate from external terminals 2: input from RS-485 devices or digital keypad (KPC-CE01/ KPC-CC01)	1
01-05	Reserved		
01-06	Reserved		
01-07	Reserved		
01-08	Set DC voltage operating level (offset value)	230V : 30~100V 460V : 60~200V	40 80
01-09	Reserved		
✓01-10	DC voltage control P gain	0~1000%	100
✓01-11	DC voltage control I gain	0~1000%	100
✓01-12	DC voltage control bandwidth	1~100Hz	40
01-13	Reserved		
✓01-14	Select multi-function display	0: display DC voltage (v)	0
		1: display mains frequency (H)	
		2: display input current (A)	
		3: display input AC voltage (E)	
		7: display power (P)	
		8: display current limit (p)	

02 Digital Input/Output Parameters

Parameter codes	Parameter names	Setting range	Factory Setting
02-00	Multi-function input command 1 (MI1)	0: no function	1
02-01	Multi-function input command 2 (MI2)	1: Automatic mode	0
02-02	Multi-function input command 3 (MI3)	2: Reserved	3
02-03	Multi-function input command 4 (MI4)	3: EF (external error)	4
02-04	Multi-function input command 5 (MI5)	4: RESET	5
		5: Parallel mode	
		6: no function	
✓02-05	Digital input response time	0.001 - 30.000s	0.005
✓02-06	Digital input direction	0~65535	0
✓02-07	Multi-function output 1 (Relay1)	0: no function	4
✓02-08	Multi-function output 2 (MO1)	1: Regenerating indicator	3
✓02-09	Multi-function output 3 (MO2)	2: RUN indicator	0
		3: Ready indicator	
		4: Error indicator	
		5: no function	
		6: Warning indicator	
		7: no function	
✓02-10	Multi-function output direction	0~65535	0

03 Special Protection Parameters

Parameter codes	Parameter names	Setting range	Factory Setting
✓03-00	Low voltage level	230V models:160.0 - 220.0 V 460V models:320.0 - 440.0 V	180 360
✓03-01	Current limit	0~150%	150
✓03-02	Reserved		
✓03-03	Reserved		
✓03-04	Phase-locking frequency deviation time	0 - 1000ms	150
✓03-05	Reserved		
✓03-06	Reserved		
✓03-07	Restart times after error	0~10	0
✓03-08	Return time of error restart	0.1 - 6000.0s	60.0
✓03-09	Cooling fan control mode	0: fan continues to run 1: runs for 1 minute after shut down and then stops 2: runs/stops as the Power Regenerative Unit regenerates/stops 3: runs according to the temperature of the power module 4: off	3
03-10	Reserved		
03-11	Reserved		
✓03-12	Erase the record of energy regenerated	0: no function 1: erase	0
✓03-13	Electricity rate	0 - 6553.5 $ / kWh	3.0

04 Communication Parameters

Parameter codes	Parameter names	Setting range	Factory Setting
✓04-00	Communication address	1~254	1
✓04-01	COM1 transmission speed	4.8~115.2Kbps	9.6
✓04-02	COM1 transmission error handling	0: give warning but continue operating 1: give warning and stop operation 2: reserved 3: no action and no display	3
✓04-03	COM1 timeout detection	0.0 - 100.0s	0
✓04-04	COM1 communication format	0: 7N1 (ASCII) 1: 7N2 (ASCII) 2: 7E1 (ASCII) 3: 7O1 (ASCII) 4: 7E2 (ASCII) 5: 7O2 (ASCII) 6: 8N1 (ASCII) 7: 8N2 (ASCII) 8: 8E1 (ASCII) 9: 8O1 (ASCII) 10: 8E2 (ASCII) 11: 8O2 (ASCII) 12: 8N1 (RTU) 13: 8N2 (RTU) 14: 8E1 (RTU) 15: 8O1 (RTU) 16: 8E2 (RTU) 17: 8O2 (RTU)	1
✓04-05	Delay on communication response time	0.0~200.0ms	2
04-06 ~ 04-38	Reserved		

05 Application Parameters

Parameter codes	Parameter names	Setting range	Factory Setting
✓05-00	DC voltage filtering time	0.000~65.535	0.000
✓05-01	Mains frequency filtering time	0.000~65.535	0.000
05-02 ~ 05-20	Reserved		

07 Descriptions of Parameter Settings

00 Display Parameters

✓Represents parameter settings that can be adjusted during operation

00-00 ID code for the Power Regenerative Unit
00-01 Display rated of the Power Regenerative Unit

Factory setting: read-only

Display by model Read-only

Pr00-00 determines the capacity of the Power Regenerative Unit and is a factory-setting parameter. Also, the current value in the read only Pr00-01 is the rated current for that model. Pr00-00 corresponds to the current displayed in parameter 00-01.

REG2000 Model code table																
Input voltage	230V							460V								
Model code	**0**	**2**	**4**	**6**	**8**	**10**	**12**	**1**	**3**	**5**	**7**	**9**	**11**	**13**	**15**	**17**
Corresponding capacity of the Power Regenerative Unit (kW)	7.5	11	15	18.5	22	30	37	7.5	11	15	18.5	22	30	37	45	55
Rated input current (A)	20	32	38	49	60	80	100	10.5	17	20	25	32	43	49	60	75

00-02 Software version

Factory setting: #.##

Read-only (display according to shipped version)

00-03 Display input current of the Power Regenerative Unit(AAC)
00-04 Displays mains frequency (Hz) (cable frequency)

Factory setting: #.##

Read-only

00-05 Display DC voltage (VDC)

Factory setting: #.#

Read-only

00-06 Displays power (kW)

Factory setting: #.#

-300.0 ~ 300.0

00-07 Reserved
00-08 Reserved

00-09 Display the lower value of kilowatt hours (kWh) regenerated by REG2000

Factory setting: ###.#

0.0~999.9

00-10 Display the higher value of kilowatt hours (kWh) regenerated by REG2000

Factory setting: ####

0~9999

- When Pr.03-12 =1, Pr.00-09 and Pr.00-10 will be cleaned to be 0 and Pr03-12 will be back to 0.
- When the setting of Pr00-09 and Pr00-10 are done, the REG will start to run and the counting will start.
- Display Pr00-10*1000 + Pr00-09.

00-11 Displays the highest ambient temperature (°C) (air outlet)
00-12 Displays the highest IGBT temperature (°C)

Factory setting: ##.#

Read-only

00-13 Displays internal temperature (°C) (air outlet)
00-14 Displays power module's temperature (°C)

Factory setting: ##.#

Read-only

00-15 Displays the ON/OFF status of digital input
00-16 Displays the ON/OFF status of digital output

Factory setting: ###

Read-only

00-17 DC voltage during a malfunction (V_{DC})

Factory setting: ##.#

Read-only

00-18 Mains frequency during a malfunction (Hz)
00-19 Current during a malfunction (A)

Factory setting: #.##

Read-only

00-20 Error log 1
00-21 Error log 2
00-22 Error log 3
00-23 Error log 4
00-24 Error log 5
00-25 Error log 6

Factory setting: 0

Settings

0: no error records
3: ocn over current during regeneration
6: ocs over current at stop
9: ovn over voltage during regeneration
10: ovs overvoltage at stop

15: OrP open-phase in output
16: oH1 power module overheated
17: oH2 internal ambient temperature overheated (air outlet)
18: tHo1 power module overheated protection circuit error
19: tHo2 internal ambient temperature overheated protection circuit error
21: oL overload
30: cF1 memory write error
31: cF2 memory read error

37: Hd1 oc Current detection error (over current) when powering on
38: Hd2 ov Voltage detection error (over voltage) when powering on.
42: 5VF 5V control board error (firmware v.1.02 (included) and later.
43: RYF Relay error (firmware v.1.02 and later
49: EF External signal input error
52: Pcod Wrong Password
54: cE1 communication error
55: cE2 communication error
56: cE3 communication error
57: cE4 communication error
58: cE10 communication time out
66: PLE phase lock error

📖 PLE and Orp errors are only recorded and deemed as an error in power regeneration status, otherwise they will be warnings in Ready and Run status.

📖 OH1 Level

Model	Default
REG075A23A	100
REG110A23A	110
REG150A23A	100
REG185A23A	100
REG220A23A	100
REG300A23A	95
REG370A23A	105

Model	Default
REG075A43A	100
REG110A43A	105
REG150A43A	110
REG185A43A	100
REG220A43A	90
REG300A43A	90
REG370A43A	95
REG450A43A	115
REG550A43A	115

00-26 Low word in electricity bill
00-27 High word in electricity bill

Factory setting: ###

Settings Read only

- When Pr.03-12 =1, Pr.00-09 and Pr.00-10 will be cleaned to be 0 and Pr03-12 will be back to 0.
- Display the dollar amount saved on electricity expense. The settings of the related parameters are shown below.
  The kw/hr regenerated (Pr 00-09 ~ 00-10) x electricity expense (Pr03-13).
  The display mode is Pr00-27*1000 + Pr00-26.

00-28 Displays input AC voltage (VAC)

Factory setting: ##.#

Settings Read only

01 Basic Parameters

✓represents parameter settings that can be adjusted during operation

01-00 Reset parameters

Factory setting: 0

Settings	0: no function
	1: parameter cannot be written
	10: parameter reset

- When set to "1", only parameters 01-00 to 01-03 can be adjusted, the other parameters will be read-only; in combination with the password parameters, this can prevent the parameters from being altered unintentionally by mistake.
- To restore the parameters to factory settings, just set this parameter to 10.If a password is set, it must first be entered before the settings can be restored, and the password will be cleared at the same time.

✓ 01-01 Select startup display

Factory setting: 0

Settings	0: mains frequency
	1: DC side voltage (V_{DC})
	2: Output current (A_{AC})

✓ 01-02 Enter parameter protection password

Factory setting: 0

Settings	1~9998,10000~65535
Display value	0-2: number of incorrect passwords entered

- Enter the password set in parameter 01-03 into parameter 01-02, and all password protected parameters will be unlocked.
- After setting this parameter, write down the setting to avoid inconveniences in the future.
- The purpose of using parameters 01-02 and 01-03 is to prevent non-technicians from unintentionally altering other parameters.
- If the password is lost or forgotten, it can be reset by entering 9999 and pressing the "ENTER" key, enter 9999 and press "ENTER" again (this sequence must be completed within 10 seconds, otherwise please do it again). This will also restore previously altered parameter settings back to the factory setting.

✓ 01-03 Set up parameter protection password

Factory setting: 0

Settings	1~9998,10000~65535
Display value	0: password not set or password entered successfully in 01-02
	1: parameters locked

- This parameter sets password protection, which can be entered directly the first time. After the password is set, the parameter value will become 1, meaning password protection is enabled. To make changes to any parameter, first go to parameter 01-02 and enter the correct password. After unlocking the password protection, the parameter value for 01-02 will be set to 0, and all parameters will become adjustable.
- After password protection is enabled, all parameter values except for parameter 01-03 will display 0.
- Password protection can be turned off by unlocking the password protection in parameter 01-02 and setting this parameter to 0.Password protection will remain off after a system reboot.
- The password will otherwise remain active permanently. After turning on the system, if any parameters need to be changed, first unlock the password protection in parameter 01-02.
- How to reactivate password protection:

  Method 1: Reenter the password in 01-03.

  Method 2: Reboot the system and password protection will immediately be restored.

  Method 3: Enter any value other than the password in 01-02.

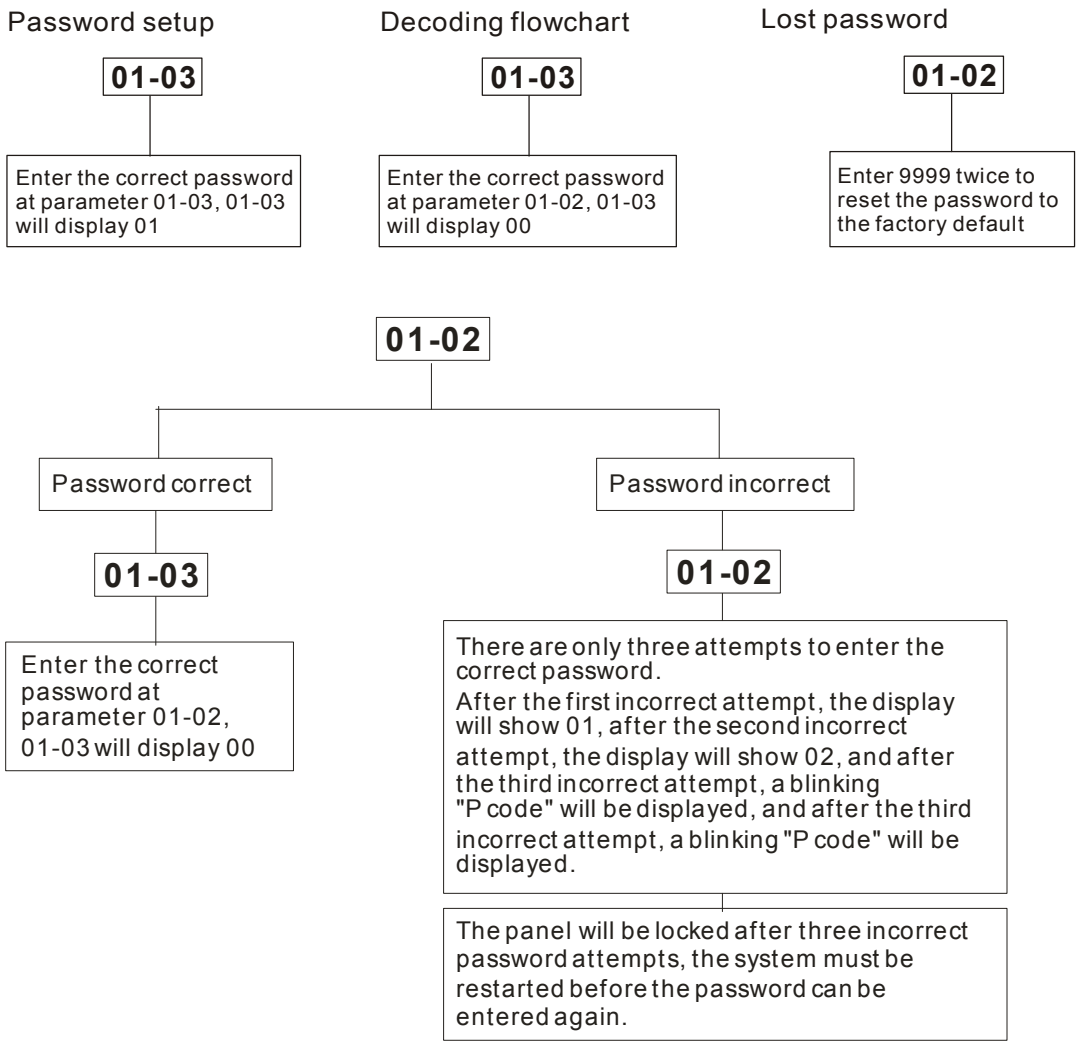

01-04 Set source of operation command

Factory setting:1

Settings 1: operation commands controlled via external terminals

2: operation commands controlled through communication interface or the digital keypad (KPC-CC01)

As the standard package does not contain the digital keypad upon shipping, users have to control operation via external terminals. Please confirm that the wiring between multi-function input terminals is correct before using.

To operate using the communication interface, a digital keypad KPC-CC01 or KPC-CE01 must be purchased before the source of operation command can be set to the communication interface.

01-05 Reserved

01-06 Reserved

01-07 Reserved

01-08 DC voltage operating level (offset value)

Settings 230V models: 30 - 100V Factory setting:40

460V models: 60 - 200V Factory setting:80

The feedback activating voltage is set to the mains voltage (parameter 00-28) * $\sqrt{2}$ + Pr01-08.

The Power Regenerative Unit will stop output:

(1) When DC side voltage < (DC side voltage + Pr01-08 – 10V).

(2) When the output current (AAC) of the Power Regenerative Unitis 10% lower than the rated output for more than 1 second.

There is an absolute upper limit and an absolute lower limit within the DC side voltage activation level. Take the 440v models as an example, their absolute upper limit of the DC side voltage activation level is 780V. That means even when the input voltage is 528Vac and the Pr01-08 =200V, the DC side voltage activation level should be 528*1.414+200=947Vdc. However, the design of the Power Regenerative Unit forces the trigger upper limit to stay under 780Vdc

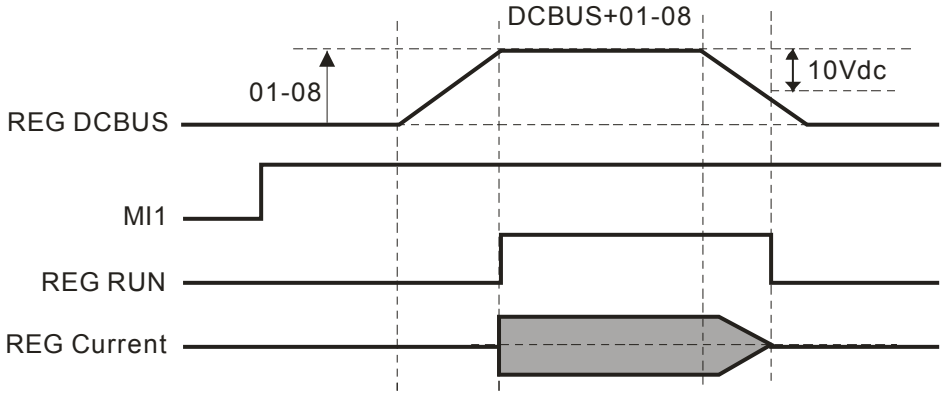

01-09 Reserved

01-10 DC voltage control P gain
01-11 DC voltage control I gain

Factory setting:100

Settings 0 - 1000%

- Pr01-10 is the parameter which decides the response rate of P function on DC side voltage bias.
- Take the greater gain; the response rate will be faster while the DC side voltage bias will become smaller. But if the gain is too big, there will be an oscillation.
- Take the smaller gain; the response rate will be slow while the DC side voltage bias will become larger. It is scaled to be100% corresponding to the Kp value of auto-calculated DC side voltage controller bandwidth (Pr01-12).
- Pr01-11 is an integral controller to eliminate the error caused by the DC side voltage bias.

  The bigger the integral gain, the faster the response rate to respond to external disturbance. But the smaller the integral gain, the slower the response rate to respond to the external disturbance. The oscillation is easy to occur. It is scaled to be 100% corresponding to the Ki value of auto-calculated DC side voltage controller bandwidth (Pr01-12).

01-12 DC voltage control bandwidth

Factory setting:40

Settings 1 - 100Hz

- This parameter controls the DC voltage response speed; the higher the value, the faster the response.

01-13 Reserved

01-14 Select multi-function display

Factory setting: 0

Settings 0: display DC voltage (v)
1: display mains frequency (H)
2: display input current (A)
3: display input AC voltage (E)
7: display power (P)
8: display current limit (p)

02 Input and Output Parameters

✓Represents parameter settings that can be adjusted during operation

02-00 Multi-function input terminal 1 (MI1)

Factory setting:1

02-01 Multi-function input terminal 2 (MI2)

Factory setting: 0

02-02 Multi-function input terminal 3 (MI3)

Factory setting:3

02-03 Multi-function input terminal 4 (MI4)

Factory setting:4

02-04 Multi-function input terminal 5 (MI5)

Factory setting:5

Settings 0: no function
1: Automatic mode
2: Reserved
3: EF
4: RESET
5: Parallel mode
6: no function

This parameter can be planned and adjusted by the user to include necessary external terminal input functions as required.

List of functions

Setting	Function	Description
0	no function	The output terminal does not have any function
1	automatic mode (the default terminal is MI1)	This terminal setting only becomes effective when parameter 01-04 is set to 1 "controlled via external terminals" When the Auto mode is ON and when the Power Regenerative Unit detects DC side voltage reaches the setting of Pr01-08, the DC side voltage will be regenerated to electrical grid. The default wiring between multi-function input terminals is as below. Please check the wiring is correct before using. Please refer to 04 Wiring for more details of wiring about auto mode. 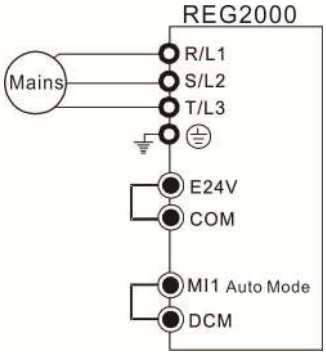

Setting	Function	Description
2	Reserved	The output terminal is reserved
3	EF	External failure input terminal
4	RESET	Only this terminal function can reset the Power Regenerative Unit after eliminating a failure
5	Parallel mode (the default terminal is MI5)	This terminal setting only becomes effective when parameter 01-04 is set to 1 "controlled via external terminals." Before setting to parallel mode, select Auto as the control mode. When working under parallel mode, each power regenerative unit will reduce its current limit to 80% automatically. The default wiring between multi-function input terminals of each power regenerative unit is as below. Please check the wiring is correct before using. Please refer to 04 Wiring for more details of wiring about parallel mode. 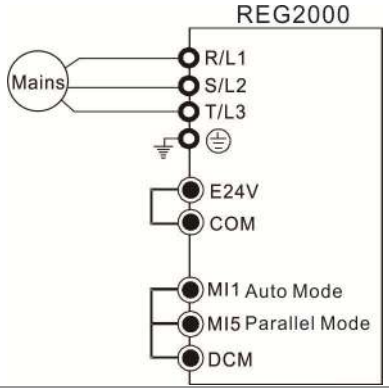
6	no function	The output terminal does not have any function

02-05 Digital input response time

Factory setting:0.005

Settings 0.001 - 30.000s

This parameter adds a delay and confirms process to digital input terminal signals, the delay time is the confirmation time. This can prevent unknown interference from causing the digital input terminals (MI1 - 5) to malfunction (except counting inputs). This parameter can significantly improve these situations, but response time will be slightly delayed.

02-06 Digital Input Direction

Factory setting: 0

Settings 0 - 65535

This parameter sets the activation point for input signals, and the setting has no relation to the SINK/SOURCE status of the terminals.

bit 0 - bit 4 corresponds to MI1 - MI5, respectively.

Users can enter corresponding values by ways of communication, to alter the ON/OFF status of the terminals.

02-07 Multi-function output (Relay 1)

Factory setting:4

02-08 Multi-function output (MO1)

Factory setting:3

02-09 Multi-function output (MO2)

Factory setting: 0

Settings

0: no function

1: Regenerate indicator

2: Run indicator

3: Ready indicator

4: Error indicator

5: no function

6: Warning indicator

7: no function

This parameter can be planned and adjusted by the user to include necessary external terminal output functions as required.

List of functions

Setting	Function	Description
0	no function	The output terminal does not have any function.
1	Regenerate indicator	When the Power Regenerative Unit is in Regenerate status, the contacts will be in ON status.
2	Run indicator	After powering on and sending commands, the Power Regenerative Unit will be in normal operation (including stand by and regenerate) and the contacts will be in ON status.
3	Ready indicator	The contacts will be "ON" when the Power Regenerative Unit is not suffering from any error and warning. Besides, when the phase-locking is complete, RUN command can be sent.
4	Error indicator	The contacts will “ON” when an error is detected by the Power Regenerative Unit.
5	no function	The output terminal does not have any function
6	Warning indicator	The contacts will " ON " when a warning is detected by the Power Regenerative Unit.
7	no function	The output terminal does not have any function

See < Figure 3: The Definition of Different Working Status of Power Regeneration.> in section 4-4 for more information.

02-18 Multi-function output direction

Factory setting: 0

Settings 0~65535

The setting of this function is binary, if a bit is set to 1, the multi-function output direction is reversed; e.g. when Pr02-07 is set to 1 (Regenerate indicator), if the bit is set to 0 or the forward output direction, Relay 1 will activate (ON) only when the Power Regenerative Unit is regenerating, and when the Power Regenerative Unit is stopped, Relay 1 will be OFF. In contrast, if the bit is set to 1 or the reverse output direction, Relay 1 will be OFF when in regeneration, and ON when stopped.

Bit 2	Bit 1	Bit 0
MO2	MO1	RY1

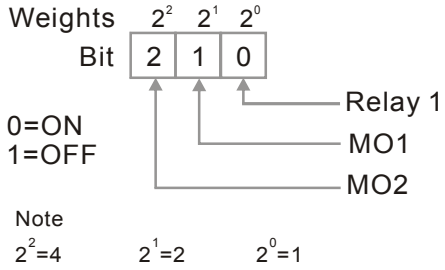

03 Special Protection Parameters

✓represents parameter settings that can be adjusted during operation

✓ 03-00 Low voltage level

Factory setting:180.0/360.0

Settings 230V models:160.0~220.0V
460V models:320.0~440.0V

This parameter sets the LV voltage level.

When the voltage of the Power Regenerative Unit drops below the low voltage level, the parameter will send a warning.

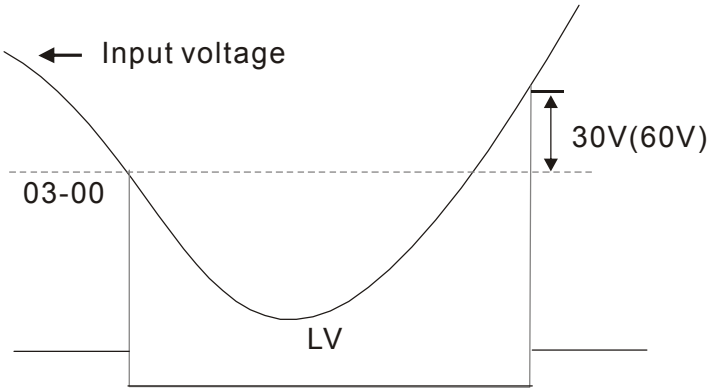

✓ 03-01 Current limit

Factory setting:150

Settings 0 - 150%

This parameter limits the maximum current output of the Power Regenerative Unit.

03-02 Reserved
03-03 Reserved
03-05 Reserved
03-06 Reserved

✓ 03-04 Phase-locking frequency deviation time

Factory setting:150

Settings 0 - 1000ms

When a frequency is detected to be < 47Hz or >63Hz and the duration is longer than the value set at Pr03-04, a PLE phase-locking signal will be generated.

03-06 Reserved

✓ 03-07 Restart times after error

Factory setting: 0

Settings 0 - 10

After an error (acceptable error: only OC over current, OV overvoltage), the number of times the

Power Regenerative Unit can automatically reset/restart may be set to 10 times. If this is set to 0, then the system will not automatically reset/restart after an error.

03-08 Return time of error restart

Factory setting:60.0

Settings 0.1 - 6000.0s

When an error restart occurs, the Power Regenerative Unit will start a count down according to the setting of this parameter. If the count down reaches the set time before another error restarts, then Pr03-07 number of error restarts will reset to the initial value.

03-09 Cooling fan control mode

Factory setting:3

Settings 0: fan runs always
1: runs for 1 minute after stop and then stops
2: runs/stops as the Power Regenerative Unit regenerates/stops
3: runs according to the temperature of the power module
4: always off

This parameter determines the cooling fan setting.

If the parameter is set to 0, the cooling fan will start running as soon as the Power Regenerative Unit starts transmitting power.

If the parameter is set to 1, the cooling fan will run when the Power Regenerative Unit runs and will stop 1 minute after the Power Regenerative Unit stops.

If the parameter is set to 2, the cooling fan will run when the Power Regenerative Unit runs and will stop as soon as the Power Regenerative Unit stops.

If the parameter is set to 3, the cooling fan will adjust its speed according to the temperature of the power module. When the temperature is high, the cooling fan starts running; the higher the temperature the faster it runs, and when temperature drops within the normal range(As shown in the table below), the cooling fan will stop.

If the parameter is set to 4, the cooling fan will be always off.

Model	Operating temperature range of fans (RUN→STOP)
REG075A23A	50→40
REG110A23A	60→50
REG150A23A	50→40
REG185A23A	50→40
REG220A23A	50→40
REG300A23A	45→35
REG370A23A	65→55
REG075A43A	50→40
REG110A43A	55→45
REG150A43A	60→50
REG185A43A	50→40
REG220A43A	40→30
REG300A43A	40→30
REG370A43A	45→35
REG450A43A	65→55
REG550A43A	65→55

03-10 Reserved
03-11 Reserved

03-12 Erase the record of energy regenerated

Factory setting: 0

Settings 0: parameter reverted

1: erase

Setting this parameter to 1 clears parameters 00-09 and 00-10 to 0, and this parameter reverts to 0.

03-13 Electricity rate

Factory setting:3.0

Settings 0 - 6553.5

Set up calculation for local electricity bill. Unit: $/kw-hr

04 Communication Parameters

represents parameter settings that can be adjusted during operation

When using the communication interface, the communication port definition is shown as in the diagram on the right.
We recommend using a Delta IFD6530 or IFD6500 as a communication converter to connect the power regenerative unit to a computer.

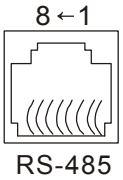

Modbus RS-485
Pin 1~2, 7, 8: Reserved
Pin 3, 6:GND
Pin 4:SG-
Pin 5:SG+

04-00 Communication address

Factory setting:1

Settings 1 - 254

When the system uses the RS-485 serial communication interface to control or monitor, every Power Regenerative Unit must have its own communication address and every address in the network must be unique.

04-01 Communication transmission speed

Factory setting:9.6

Settings 4.8 - 115.2kbits/s

This parameter sets the speed of transmission between the Power Regenerative Unit and computers.

04-02 Communication error handling

Factory setting:3

Settings 0: gives warning but continues operating
1: gives warning and stops
2: reserved
3: no actions and no display

This parameter determines how the Power Regenerative Unit handles a transmission timeout error (such as a broken line) during communications.

04-03 Timeout detection

Factory setting:0.0

Settings 0.0 - 100.0s
0.0: no detection

This parameter sets the duration for a timeout during transmissions between communication ports and COM1.

04-04 Communication format

Factory setting:1

Settings 0: 7,N,1 for ASCII
1: 7,N,2 for ASCII
2: 7,E,1 for ASCII
3: 7,O,1 for ASCII
4: 7,E,2 for ASCII
5: 7,O,2 for ASCII

6: 8,N,1 for ASCII
7: 8,N,2 for ASCII
8: 8,E,1 for ASCII
9: 8,O,1 for ASCII
10: 8,E,2 for ASCII
11: 8,O,2 for ASCII
12: 8,N,1 for RTU
13: 8,N,2 for RTU
14: 8,E,1 for RTU
15: 8,O,1 for RTU
16: 8,E,2 for RTU
17: 8,O,2 for RTU

- Computer control Computer Link
- When using the RS-485 serial communication interface, every Power Regenerative Unit must first have a communication address assigned in parameter 09-00. The computer will control the units based on their individual addresses.
- Communications protocol uses MODBUS ASCII (American Standard Code for Information Interchange) Mode: A byte is made by a combination of 2 ASCII codes. For example: the value 64 Hex, represented as "64" in ASCII, is a combination of "6" (36Hex) and "4" (34 Hex).

1. Character encoding

The communication protocol is hexadecimal, the ASCII codes denotes: “0”…”9”, ”A”…”F”. Each hexadecimal character represents the corresponding ASCII code. For example:

Character	‘0’	‘1’	‘2’	‘3’	‘4’	‘5’	‘6’	‘7’
ASCII code	30H	31H	32H	33H	34H	35H	36H	37H

Character	‘8’	‘9’	‘A’	‘B’	‘C’	‘D’	‘E’	‘F’
ASCII code	38H	39H	41H	42H	43H	44H	45H	46H

2. Character structure

10-bit character frame (For ASCII)

(data format 7 , N , 2)

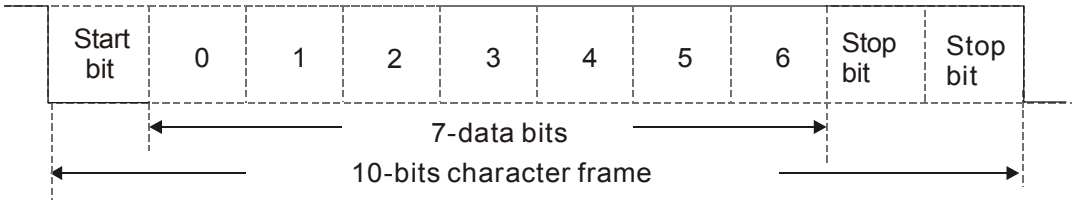

(data format 7 , E , 1)

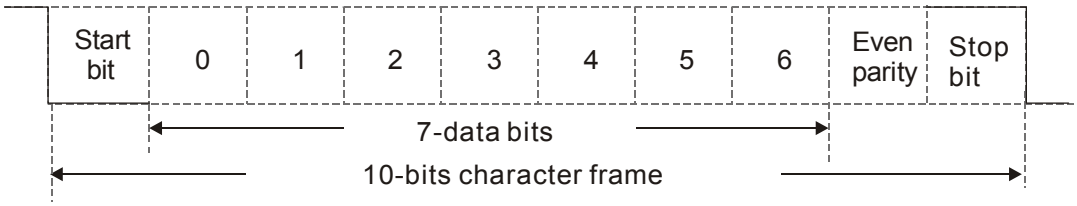

(data format 7 , O , 1)

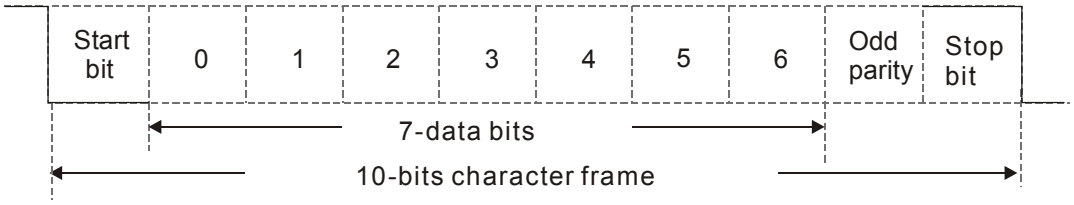

11-bit character frame (For RTU)

(data format 8 , N , 2)

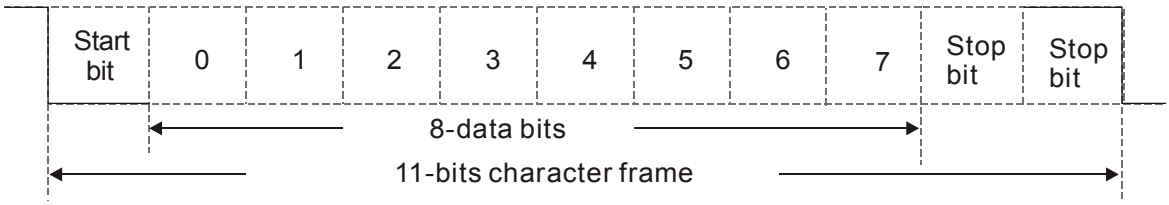

(data format 8 , E , 1)

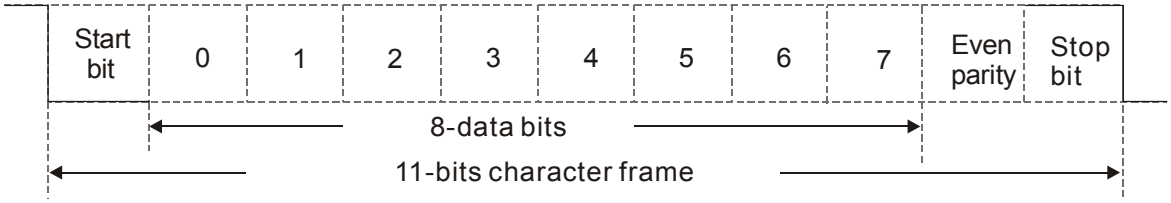

(data format 8 , O , 1)

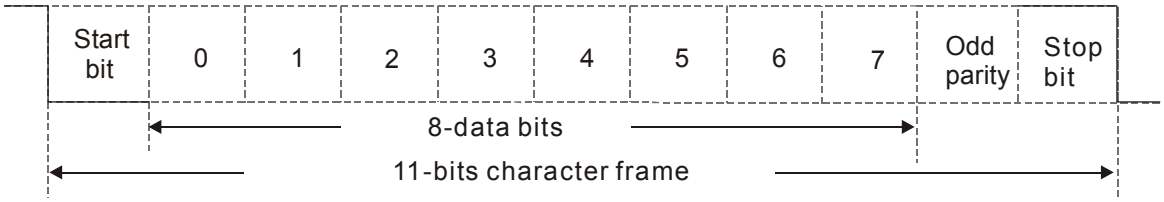

3. Communication data structure

Data format frame

ASCII mode:

STX	Start bit = ':' (3AH)
Address Hi	Communication address
Address Lo	8-bit addresses are a combination of 2 ASCII codes
Function Hi	Function code:
Function Lo	8-bit function codes are a combination of 2 ASCII codes
DATA (n-1)	Data character:
…….	n×8-bit data characters are combinations of 2n ASCII codes
DATA 0	n<=16, at most 32 ASCII codes (20 sets of data)
LRC CHK Hi	LRC check codes:
LRC CHK Lo	8-bit check codes are a combination of 2 ASCII codes
END Hi	End bit:
END Lo	END Hi = CR (0DH), END Lo = LF(0AH)

RTU mode:

START	Maintains no input signal for at least 10ms
Address	Communication address8-bit binary address
Function	Function code:8-bit binary address
DATA (n-1)	Data character: n×8-bit data, n<=16
…….	
DATA 0	
CRC CHK Low	CRC check codes: 16-bit CRC check codes are a combination of 2 8-bit binary codes
CRC CHK High	
END	Maintains no input signal for at least 10ms

Communication address (Address)

00H: broadcasts to all Power Regenerative Units
01H: targets the Power Regenerative Unit at address 01
0FH: targets the Power Regenerative Unit at address 15
10H: targets the Power Regenerative Unit at address 16, and so on..., to the maximum of 254 (FEH).

Function code and data character

03H: reads data from the register
06H: writes one set of data to the register

For example: codes to target Power Regenerative Unit01H, read out 2 consecutive data characters in the register as shown below: starting from register address 2102H

ASCII mode:

Inquiry message string format:

STX	':'
Address	'0'
	'1'
Function	'0'
	'3'
Starting address	'2'
	'1'
	'0'
	'2'
Number of data (count by word)	'0'
	'0'
	'0'
	'2'
LRC Check	'D'
	'7'
END	CR
	LF

Response message string format:

STX	':'
Address	'0'
	'1'
Function	'0'
	'3'
Number of data (count by byte)	'0'
	'4'
Content of starting address 2102H	'1'
	'7'
	'7'
	'0'
Content of address 2103H	'0'
	'0'
	'0'
	'0'
LRC Check	'7'
	'1'
END	CR
	LF

RTU mode:

Inquiry message string format:

Address	01H
Function	03H
Starting data address	21H
	02H
Number of data (count by world)	00H
	02H
CRC CHK Low	6FH
CRC CHK High	F7H

Response message string format:

Address	01H
Function	03H
Number of data (count by byte)	04H
Content of data address 2102H	17H
	70H
Content of data address 2103H	00H
	00H
CRC CHK Low	FEH
CRC CHK High	5CH

Function code 06H: writes one set of data to the register (at most 20 sets of data can be written consecutively to the register at once)

For example: for Power Regenerative Unit01H, write 6000 (1770H) to the internal setting parameter 0100H.

ASCII mode:

Inquiry message string format:

STX	':'
Address	'0'
	'1'
Function	'0'
	'6'
Data address	'0'
	'1'
	'0'
	'0'
Data content	'1'
	'7'
	'7'
	'0'
LRC Check	'7'
	'1'
END	CR
	LF

Response message string format:

STX	':'
Address	'0'
	'1'
Function	'0'
	'6'
Data address	'0'
	'1'
	'0'
	'0'
Data content	'1'
	'7'
	'7'
	'0'
LRC Check	'7'
	'1'
END	CR
	LF

RTU mode:

Inquiry message string format:

Address	01H
Function	06H
Data address	01H
	00H
Data content	17H
	70H
CRC CHK Low	86H
CRC CHK High	22H

Response message string format:

Address	01H
Function	06H
Data address	01H
	00H
Data content	17H
	70H
CRC CHK Low	86H
CRC CHK High	22H

Command code: 10H, continuously writes multiple sets of data

For example, change the multispeed settings 04-00=50.00 (1388H), 04-01=40.00 (0FA0H) for the Power Regenerative Unit (address 01H)

ASCII mode:

Command message:

STX	':'
ADR 1	'0'
ADR 0	'1'
CMD 1	'1'
CMD 0	'0'
Data Start address	'0'
	'5'
	'0'
	'0'
Data amount (Word)	'0'
	'0'
	'0'
	'2'

Response message:

STX	':'
ADR 1	'0'
ADR 0	'1'
CMD 1	'1'
CMD 0	'0'
Data address	'0'
	'5'
	'0'
	'0'
Data amount (Word)	'0'
	'0'
	'0'
	'2'

Command message:

Data amount (Byte)	‘0’
	‘4’
First set Data	‘1’
	‘3’
	‘8’
	‘8’
Second set Data	‘0’
	‘F’
	‘A’
	‘0’
LRC Check	‘9’
	‘A’
END	CR
	LF

Response message:

LRC Check	‘E’
	‘8’
END	CR
	LF

RTU mode:

Command message:

ADR	01H
CMD	10H
Data Start address	05H
	00H
Data amount (Word)	00H
	02H
Data amount (Byte)	04
First set Data	13H
	88H
Second set Data	0FH
	A0H
CRC Check Low	‘9’
CRC Check High	‘A’

Response message:

ADR	01H
CMD 1	10H
Data Start address	05H
	00H
Data amount (Word)	00H
	02H
CRC Check Low	41H
CRC Check High	04H

Check code in ASCII mode (LRC Check)

Check code (LRC Check) is the sum from Address to Data Content. For example, the check code of the inquiry message in 3.3.1 above: 01H + 03H + 21H + 02H + 00H + 02H = 29H, and take the complement number of 2 = D7H.

Check code in RTU mode (CRC Check)

Check code starts from Address and ends at Data content. The calculation is shown below:

Step 1: set the 16-bit register (CRC register) = FFFFH.

Step 2: Exclusive OR the first 8-bit byte message and the low bit 16-bit CRC register, create Exclusive OR, and store the results in CRC register.

Step 3: shift 1 CRC register to the right, fill in 0 high bit position.

Step 4: check the shifted value, if it is 0, store the new value from step 3 to the CRC register, otherwise Exclusive OR A001H and the CRC register, and store the results to the CRC register.

Step 5: repeat steps 3 - 4, until all 8-bits are complete.

Step 6: repeat step 2 - step 5, take the message command from the next 8-bit, until all message commands are computed. Finally, the acquired value in the CRC register is the CRC check code. Please note the CRC check code must be alternate places within the message command check code.

The following is an example of computing the CRC check code using language C:

```
unsigned char* data      ← // message command index
unsigned char length    ← // length of message command
unsigned int crc_chk(unsigned char* data, unsigned char length)
  {
  int j;
  unsigned int reg_crc=0Xffff;
  while(length--){
    reg_crc ^= *data++;
    for(j=0;j<8;j++){
    if(reg_crc & 0x01){   /* LSB(b0)=1 */
      reg_crc=(reg_crc>>1) ^ 0Xa001;
    }else{
      reg_crc=reg_crc >>1;
    }
  }
}

return reg_crc;                    // final value returned to CRC register
```

4. Definition of parameter addresses in the communication protocol

Definition of REG2000 parameters	Parameter address (GGnnH)	Description of Function GG stands for the parameter group and nn stands for the parameter number. For example: 04-01 is shown as 0401H.		Read/ Write
Command/ Write only	2000H	Bit 1~0	00: No function (operating command remains unchanged)	W
			01: Stop	W
			10: Start	W
		Bit 15~3	No function	N/A
	2001H	No function		N/A
	2002H	Bit 0	1: Enable the external error (E.F.)	W
		Bit1	2: Reset Command	W
		Bit 5~2	No function	N/A
Status monitor/ Read only	2100H	Bit7~0	High Byte Error Code	R
		Bit15~8	Low Byte: Warning Code	R
	2110H	Bit7~0	ID code of the Power Regenerative Unit (same as Pr00-00)	R
		Bit15~8	Product model ID(REG2000 code: 14)	R
	2112H	Bit15~0	Firmware version(high word, SX.XX) S: 0~9, Defined by Delta X.XX: 0.00~9.99, REG firmware version #	R
	2119H	Bit 1~0	00: Ready	R
			01: Run	

Definition of REG2000 parameters	Parameter address (GGnnH)	Description of Function GG stands for the parameter group and nn stands for the parameter number. For example: 04-01 is shown as 0401H.		Read/ Write
			10: Prepare	
			11: Regenerate	
		Bit 9~2	Reserved	N/A
		Bit10	Source of operating commands of REG 1 : Operating commands come from the external terminals 2: Control commands come from the communication interface or the digital keypad (KPC-CC01).	R
		Bit11	Unlock or Lock the Parameters 0: Unlock the parameters 1 : Lock the parameters	R
		Bit15~12	保留 Reserved	N/A
Status monitor/ Read only	2102H	Bit15~0	Mains electricity frequency (Hz)	R
	2116H	Bit15~0	Select multi-function display (Pr01-14)	R
	2200H	Bit15~0	Output current (A_{AC})	R
	2203H	Bit15~0	DC side voltage (V_{DC})	R
	2204H	Bit15~0	Output voltage(V_{AC})	R
	2206H	Bit15~0	Output power (kW)	R
	220EH	Bit15~0	Internal temperature (air outlet) (℃)	R
	220FH	Bit15~0	Power module temperature (℃)	R
	2210H	Bit15~0	Digital Input ON/OFF status, see Pr02-06.	R
	2211H	Bit15~0	Digital Output ON/OFF status, see Pr02-10	R
	2222H	Bit15~0	Rotation speed of the cooling fan (%)	R
	2229H	Bit15~0	Display regenerated kWh of REG2000 in low byte.	R
	222AH	Bit15~0	Display regenerated kWh of REG2000 in high byte.	R
	2237H	Bit15~0	Display upper limit of the current (p)	R

5. Additional response in communication errors

If an error occurs when the Power Regenerative Unit is making communication connections, the Power Regenerative Unit will respond to the main control system with an error code and set the highest bit (bit7) to 1 (i.e. Function code AND 80H), to make the main control system aware of the error. A warning message CE-XX will also be shown on the keypad display of the Power Regenerative Unit, where XX is the error code. Refer to the error code definitions in communication errors.

For example:

ASCII mode:

STX	':'
Address	'0'
	'1'
Function	'8'
	'6'
Exception code	'0'
	'2'
LRC CHK	'7'
	'7'
END	CR
	LF

RTU mode:

Address	01H
Function	86H
Exception code	02H
CRC CHK Low	C3H
CRC CHK High	A1H

Error code definitions:

Error code	Description
1	Data character value error: the value is too large and cannot be recognized by the Power Regenerative Unit.
2	Parameter address error: parameter address cannot be recognized by the Power Regenerative Unit.
3	Password locked: cannot edit the parameters
4	Parameter cannot be edited in operation
10	Transmission timeout

04-05 Communication response time delay

Factory setting:2.0

Settings 0.0 - 200.0ms

In situations where the host machine has not completed the transition (transmission - reception), use this parameter to delay the response time of the Power Regenerative Unit.

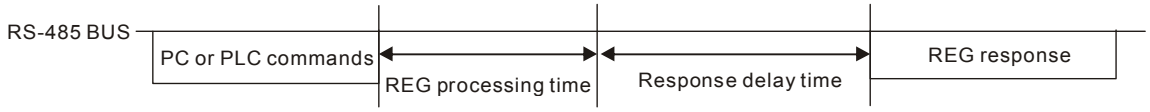

04-06 Reserved

05 Application Parameters

represents parameter settings that can be adjusted during operation

05-00 DC voltage filtering time

Factory setting:0.000

Settings 0.000 - 65.535

Pr05-00Time of filter to adjust DC SIDE voltage. The bigger the value, the better the filter result. But it might affect control performance, so it normally doesn't need adjustment.

05-01 Mains frequency filtering time

Factory setting:0.000

Settings 0.000 - 65.535

Pr05-01: The filter time displayed by the frequency which normally doesn't need adjustment.

05-02 ~ 05-20 Reserved

08 Warnings and Error Display Codes

This chapter contains information on the display function of the optional digital keypad (KPC-CC01/KPC-CE01), users who are not using the optional digital keypad can find out about error signals via the communication interface RS-485.

※ When a Power Regenerative Unit is at STOP. It is between the Ready status and the Run status. (See Section 4-4 Display Panel Indicators for more information.)

※ This chapter helps on-site technicians to do trouble shooting. If the warning/ error still persist after following the corrective actions, contact a local dealer near you or have this product sent back to Delta.

Warnings Display Codes

① Display error type

② Display error code (abbreviation)
This error code is the same as displayed on the digital controller (KPC-CE01)

③ Display error description

ID #	LCM panel display	Description
1	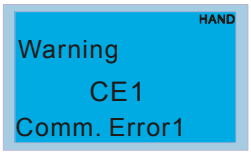	Communication Warning 1: Illegal communication command Solution ☑ Verify if the communication wring is correct (See Ch 4-3). ☑ Verify if the setting values of related parameters are within setting ranges. (See Ch 7). Press the RESET button after verifying the two items. If the warning message still pops up, contact a local dealer near you or have this product sent back to Delta.
2	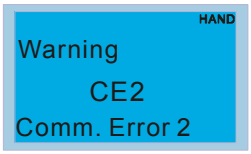	Communication Warning 2: Illegal communication data address Solution: ☑ Verify if the communication wring is correct (See Ch4-3). ☑ Verify if the communication command is correct. Press the RESET button after verifying the two items. If the warning message still pops up, contact a local dealer near you or have this product sent back to Delta.
3	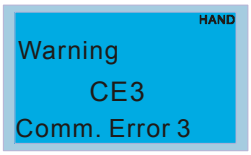	Communication Warning 3: Illegal communication data value Solution ☑ Verify if the communication wiring is correct. ☑ Verify if the communication command is correct. Press the RESET button after verifying the two items. If the warning message still pops up, contact a local dealer near you or have this product sent back to Delta.

4	HAND Warning CE4 Comm. Error 4	Communication Warning 4: Data written to read-only addresses Solution ☑ Verify if the communication wiring is correct. ☑ Verify if the communication command is correct Press the RESET button after verifying the two items. If the warning message still pops up, contact a local dealer near you or have this product sent back to Delta.
5	HAND Warning CE10 Comm. Error 10	Communication Warning 10: Modbus transmission timeout Solution ☑ Verify if the communication wiring is correct. ☑ Verify if there is any noise interference. Press the RESET button after verifying the two items. If the warning message still pops up, contact a local dealer near you or have this product sent back to Delta.
7	HAND Warning SE1 Save Error 1	Keypad copy warning 1: mistakes on copying which include communication delay, communication error and parameter value error. Solution ☑ Verify if the communication wiring is correct. Press the RESET button after verifying the item above. If the warning message still pops up, contact a local dealer near you or have this product sent back to Delta.
8	HAND Warning SE2 Save Error 2	Keypad copy warning 2: Keypad simulation is done but there is still parameter write-error. Solution ☑ Verify if the communication wiring is correct. Press the RESET button after verifying the item above. If the warning message still pops up, contact a local dealer near you or have this product sent back to Delta.
11	HAND Warning SE3 Copy Model Err	Keypad copy warning 3: the parameters duplicated don't match the model of the Power Regenerative Unit. Solution ☑ Verify if the model number and model name saved in the keypad match the model number and model name in the duplicated parameters. Press the RESET button after verifying the item above. If the warning message still pops up, contact a local dealer near you or have this product sent back to Delta.
12	HAND Warning LvS Lv at Stop	Low DC voltage warning: While at the Ready status and the Run status, the DC side voltage (Vdc) in the Power Regenerative Unit is lower than the setting value of Pr03-00. For 440V models, when Vdc <= 360V and for 220 models when Vdc <= 180V, this warning message will pop up.

		Solution ☑ Verify if the mains voltage is normal ☑ Verify if the 3-phase wiring of the mains is correct. When the Vdc is higher than the setting of Pr03-00 (+30/60V), this warning message will pop up and the system will automatically reset. Press the RESET button after verifying the item above. If the warning message still pops up, contact a local dealer near you or have this product sent back to Delta.
13	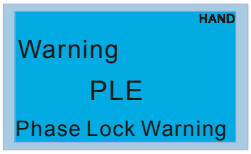	Phase-Locked Warning: While at the Ready status and the Run status, the frequency of the mains electricity is not between 46~64Hz (see Mains' frequency tolerance in Ch03 Specification.) and the deviation time is longer than the setting at Pr03-04.
		Solution ☑ Verify if the mains' frequency is normal. ☑ Verify if the 3-phase wiring of the mains is correct. When the Power Regenerative Unit refinishes the phase-lock, the system will reset automatically. If the warning message still pops up, contact a local dealer near you or have this product sent back to Delta.
14	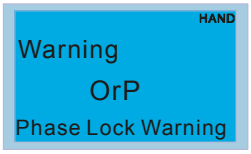	Off-load warning: While at the Ready status and the Run status, the 3-phase mains lose one or two phases.
		Solution: ☑ Verify if the voltages of the 3-phase mains are similar. ☑ Verify if the 3-phase wiring of the, mains is correct. When the voltage of the mains is back to normal, the system will reset automatically. If the warning message still pops up, contact a local dealer near you or have this product sent back to Delta.

Error Display Codes

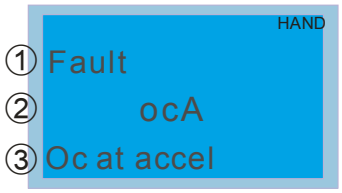

① Display error type

② Display error code (abbreviation)
This error code is the same as displayed on the digital controller (KPC-CE01)

③ Display error description

*: In accordance with the setting value of Pr00-20 ~ Pr00-25

ID #	LCM panel display	Description
3	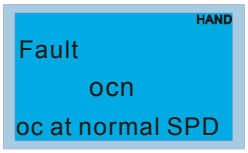	Overcurrent during regeneration; input current exceeds 2.4 times the current rating of the Power Regenerative Unit. Solution ☑ Test the wiring insulation. ☑ Raise the DC voltage operating level (See Pr01-08) ☑ Verify if the right Power Regenerative Unit has been chosen. (See Ch10 Power Regenerative Unit for more information.) ☑ Verify if there any unusual voltage surge or phase-loss at the mains side. Press the RESET button after verifying the items above. If the error message still pops up, contact a local dealer near you or have this product sent back to Delta.
6	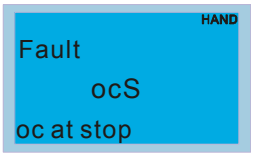	Overcurrent while at Ready status or Run status or current detection hardware circuit error Solution ☑ Test the wiring insulation. ☑ Verify if there any unusual voltage surge or off-load line at the mains side. Press the RESET button after verifying the items above. If the error message still pops up, contact a local dealer near you or have this product sent back to Delta.
9	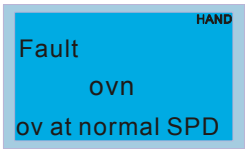	While regenerating, the Power Regenerating Unit detected overvoltage on the high-voltage end of the internal DC voltage. 230V: 425Vdc ; 460V : 850Vdc. Solution ☑ Check the power supply wiring between terminals R, S, T for poor insulation or off-load line, ☑ Check whether the input voltage is within the voltage rating range of the Power Regenerative Unit and the monitor for voltage surges. ☑ Lower the DC voltage operating level (Pr01-08) or increase the current limit (Pr03-01). If there is a voltage surge, there may be a phase advancing capacitor switch in the same power supply system, causing abnormal rise in input voltage. Press the RESET button after verifying the items above. If the error message still pops up, contact a local dealer near you or have this product sent back to Delta.

10	HAND Fault ovS ov at stop	Overvoltage while at Ready status or Run status or voltage detection hardware circuit error Solution ☑ Check whether the input voltage is within the voltage rating range of the Power Regenerative Unit and the monitor for voltage surges. ☑ If there is a voltage surge, there may be a phase advancing capacitor switch in the same power supply system, causing abnormal rise in input voltage. Press the RESET button after verifying the items above. If the error message still pops up, contact a local dealer near you or have this product sent back to Delta.
15	HAND Fault OrP AC Phase lacked	Open-Phase in Input: While Regenerating, the 3-phase mains lose one or two phases. Solution: ☑ Verify if the voltages of the 3-phase mains are similar. ☑ Verify if the 3-phase wiring of the, mains is correct. Press the RESET button after verifying the items above. If the error message still pops up, contact a local dealer near you or have this product sent back to Delta.
16	HAND Fault oH1 IGBT over heat	The Power Regenerative Unit detects a temperature higher than the safety level in the power module (See Pr00-25 in Ch07). Solution ☑ Check whether the ambient temperature is too high. ☑ Check for foreign objects in the heat sink, and whether the fan is spinning. ☑ Check whether there is enough ventilation space near the power regenerative unit Press the RESET button after verifying the items above. If the error message still pops up, contact a local dealer near you or have this product sent back to Delta.
17	HAND Fault oH2 HS over heat	The Power Regenerative Unit detects an internal (air outlet) over-temperature higher than the safety level. (This error message pops up only when the air outlet of REG370A23A/REG450A43A/REG550A43A is higher than 80ºC Solution ☑ Check whether the ambient temperature is too high. ☑ Check for foreign objects in the heat sink, and whether the fan is spinning. ☑ Check whether there is enough ventilation space near the power feedback unit. After verifying the items above, shut down the whole system and wait for at least 10 minute before pressing the reset button. If the error message still pops up, contact a local dealer near you or have this product sent back to Delta.

18	HAND Fault tH1o Thermo 1 open	The Power Regenerative Unit detects a lower than normal temperature (lower than -30ºC) at power module or temperature detection circuit error. Solution Press the RESET button after verifying the items above. If the error message still pops up, contact a local dealer near you or have this product sent back to Delta.
19	HAND Fault tH2o Thermo 2 open	The Power Regenerative Unit detects a lower than normal temperature (lower than -30ºC) at power module or temperature detection circuit error. Solution Press the RESET button after verifying the items above. If the error message still pops up, contact a local dealer near you or have this product sent back to Delta.
21	HAND Fault oL Over load	Output current (AC) exceeds the allowable rated current of the Power Regenerative Unit. (See REG2000 Performance Curve in Ch03, the duration (seconds) of output current in the allowable range). Solution ☑ Verify if the right Power Regenerative Unit has been chosen. (See Ch10 Power Regenerative Unit for more information.) Press the RESET button after verifying the item above. If the error message still pops up, contact a local dealer near you or have this product sent back to Delta.
30	HAND Fault cF1 EEPROM write Err	Memory write error Solution Press the RESET button then the system will be back to the factory setting. If the error message still pops up, contact a local dealer near you or have this product sent back to Delta.
31	HAND Fault cF2 EEPROM read Err	Memory read error Solution Press the RESET button then the system will be back to the factory setting. If the error message still pops up, contact a local dealer near you or have this product sent back to Delta.
37	HAND Fault Hd1 oc HW error	OC protection hardware circuit error Solution Current detection error at first power on. This error cannot be reset. Shut down the system and repower on, If the error message still pops up, contact a local dealer near you or have this product sent back to Delta.

38	HAND Fault Hd2 Ov HW error	OV protection hardware circuit error Solution Voltage detection error at first power on. This error cannot be reset. Shut down the system and repower on, If the error message still pops up, contact a local dealer near you or have this product sent back to Delta.
42	HAND Fault 5VF 5V fault Err	Power supply (5V) on control board error Solution Shut down the system and repower on. Wait for at least 5 seconds, make sure the supplying power is normal, this error can be reset. If the error message still pops up, contact a local dealer near you or have this product sent back to Delta.
43	HAND Fault RYF Relay fault Err	Relay error. Solution Press the RESET button then the system will be back to the factory setting. If the error message still pops up, contact a local dealer near you or have this product sent back to Delta.
49	HAND Fault EF External fault	External command causes external error (EF) and closes terminal (MOx). Then the Power Regenerative Unit stops output. Solution Press the RESET button then the system will be back to the factory setting. If the error message still pops up, contact a local dealer near you or have this product sent back to Delta.
52	HAND Fault Pco Password error	Password entered incorrectly for three consecutive times Solution ☑ See Pr01-02 and Pr01-03 ☑ Shut down the system and repower on to enter the correct password.
54	HAND Fault CE1 PC Err command	Illegal communication command Solution ☑ Verify if the communication wring is correct (See Ch 4-3). ☑ Check whether communication commands are correct (communication commands must be 03, 06, 10, 63) Press the RESET button after verifying the item above. If the error message still pops up, contact a local dealer near you or have this product sent back to Delta.
55	HAND Fault CE2 PC Err address	Illegal communication address (00H~254H) Solution ☑ Verify if the communication wring is correct (See Ch 4-3). ☑ Check whether the address of communication data is correct. Press the RESET button after verifying the item above. If the error message still pops up, contact a local dealer near you or have this product sent back to Delta.

56	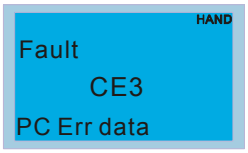	Illegal communication data value Solution ☑ Verify if the communication wring is correct (See Ch 4-3). ☑ Check whether communication data value exceeds maximum / minimum values (See Ch07). ☑ Press the RESET button after verifying the item above. If the error message still pops up, contact a local dealer near you or have this product sent back to Delta.
57	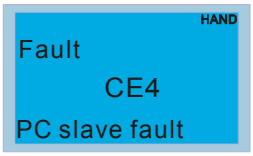	Data written to read-only addresses Solution ☑ Verify if the communication wring is correct (See Ch 4-3). ☑ Check whether the communication address is correct
58	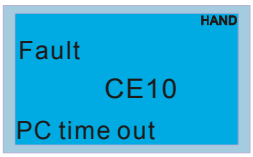	Modbus transmission timeout Solution ☑ Verify if the communication wring is correct (See Ch 4-3). Press the RESET button after verifying the items above. If the error message still pops up, contact a local dealer near you or have this product sent back to Delta.
66	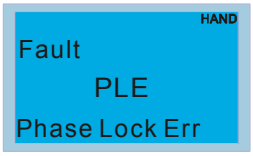	While regenerating, the frequency of the mains electricity is not between 46~64Hz (see Mains' frequency tolerance in Ch03 Specification.) and the deviation time is longer than the setting at Pr03-04. Solution ☑ Verify if the mains frequency is correct (See Ch 4-3). ☑ Verify if the 3-phase wiring of the mains is correct. Press the RESET button after verifying the items above. If the error message still pops up, contact a local dealer near you or have this product sent back to Delta.

09 Usage Recommendations and Troubleshooting

9-1 Regular Maintenance
9-2 Grease Problems
9-3 Lint Problems
9-4 Corrosion Problems
9-5 Dust Problems
9-6 Installation and Wiring Problems
9-7 Multi-function Input/Output Terminal Application Problems

The power regenerative unit has various warnings and protections against errors such as over voltages, low voltages, or over current. Once an error occurs, the protections will activate, the power regenerative unit will stop output, and the error contacts will be activated. Please refer to the error display from the power regenerative unit and look up the corresponding causes and solutions. The error log is stored in the internal memory of the power regenerative unit (can store the last 6 error messages), and can be read from the digital keypad or communication ports by accessing the parameters.

The power regenerative unit is assembled from a large number of electronic components including IC, resistors, capacitors, transistors, and cooling fans and relays. These components are not built to last forever or be used forever; even under normal circumstances, they will eventually become error-prone if used past their life spans. Therefore periodic preventive maintenance needs to be implemented to identify defective and worn down parts, thus eliminating the causes of malfunctions in the power regenerative unit at an early stage. At the same time, parts that have exceeded their product life should be replaced whenever possible to ensure safe operation.

Visual checks should be done regularly to monitor the operation of the power regenerative unit, and make sure nothing unusual happens. Check whether the following situations occurred:

CAUTION

- ☑ After an error occurs, the error must be cleared for at least 5 seconds before the RESET key becomes effective.
- ☑ The power regenerative unit must first be switched off for at least 5 minutes for ≤ 22kW model, and 10 minutes for ≥ 30kW model until the charging indicator turns off, and the DC voltage between terminals ⊕ ~ ⊖ must be lower than 25V before the cover can be opened to begin maintenance operations.
- ☑ Only qualified operators shall work on maintenance or replace parts (watch, rings, and other metal items should be taken off before operation, and only insulated tools should be used during operation).

- ☑ Never modify the power regenerative unit in any way.
- ☑ The performance and the surrounding environment meet the standard specifications. No abnormal noise, vibration, or smell.

9-1 Regular Maintenance

For regular maintenance, first stop operation, then cut the power and take off the outer cover. Even after cutting off the power supply to the power regenerative unit, charging voltages remaining in the filter capacitor will take some time to discharge. To avoid danger, operation must not start until the charging indicator goes off, and the voltage is confirmed with a voltmeter to be below the safety value (≤25Vdc).

Surrounding environment

Inspection item	Inspection method	Maintenance cycle		
		Daily	6 months	One year
Check the ambient temperature, humidity, vibration, and whether there is dust, gas, grease, water drops, etc.	Visual inspection and measuring instruments	○		
Are dangerous or abnormal objects such as tools placed in the surrounding area?	Visual inspection	○		

Voltage

Inspection item	Inspection method	Maintenance cycle		
		Daily	6 months	One year
Are the main circuit and control circuit voltages normal?	Measure with a multimeter	○		

Keyboard display panel

Inspection item	Inspection method	Maintenance cycle		
		Daily	6 months	One year
Are the displays clear?	Visual inspection	○		
Are there missing characters?	Visual inspection	○		

Mechanical parts

Inspection item	Inspection method	Maintenance cycle		
		Daily	6 months	One year
Are there abnormal sounds or vibrations?	Visual inspection, hearing	○	○	
Are any bolts (or other fastening pieces) loose?	Secure tightly	○	○	
Are any parts deformed or damaged?	Visual inspection	○	○	
Is there any discoloration due to excess heat?	Visual inspection	○	○	
Is there any dust or staining?	Visual inspection	○	○	

Main circuit

Inspection item	Inspection method	Maintenance cycle		
		Daily	6 months	One year
Are any bolts loose or missing?	Secure tightly	○		
Is the machine or insulator deformed, cracked, damaged, or discolored due to excess heat and aging?	Visual inspection		○	
Is there any dust or staining?	Visual inspection		○	

Main circuit - terminal, wiring

Inspection item	Inspection method	Maintenance cycle		
		Daily	6 months	One year
Are the terminals and copper plates deformed or discolored due to excess heat?	Visual inspection		○	
Are wire sheaths damaged or discolored?	Visual inspection		○	

Main circuit - terminal block

Inspection item	Inspection method	Maintenance cycle		
		Daily	6 months	One year
Is there any damage?	Visual inspection	○		

Main circuit - filter capacitor

Inspection item	Inspection method	Maintenance cycle		
		Daily	6 months	One year
Are there any leaking liquids, discoloration, cracks, or shell expansions?	Visual inspection	○		
Are the safety valves released? Are the valve bodies significantly expanded?	Visual inspection	○		
Measure electrostatic capacity as required		○		

Main circuit - resistor

Inspection item	Inspection method	Maintenance cycle		
		Daily	6 months	One year
Are there abnormal odors or cracks in the insulator due to excess heat?	Visual inspection, hearing	○		
Are there broken wires?	Visual inspection	○		
Are the connection joints damaged?	Measure the resistance with a multimeter	○		

Main circuit - transformer, reactor

Inspection item	Inspection method	Maintenance cycle		
		Daily	6 months	One year
Are there abnormal vibrating noises or odors?	Visual inspection, hearing	○		

Main circuit - electromagnetic contactor, relay

Inspection item	Inspection method	Maintenance cycle		
		Daily	6 months	One year
Is there a vibrating noise during operation?	Hearing	○		
Are the contacts well connected?	Visual inspection	○		

Control circuit - control printed circuit board, connector

Inspection item	Inspection method	Maintenance cycle		
		Daily	6 months	One year
Are there any loose screws or connectors?	Secure tightly		○	
Are there any abnormal odors or discoloration?	Olfactory perception, visual inspection		○	
Are there cracks, damages, deformations, or obvious corrosions?	Visual inspection		○	
Are there signs of leakage or deformation in the capacitors?	Visual inspection		○	

Cooling system - cooling fan

Inspection item	Inspection method	Maintenance cycle		
		Daily	6 months	One year
Do the fans run?	Hearing	○		
Are there abnormal sounds or vibrations?	Hearing, visual inspection, turn with hands. (Cut off power)		○	
Are any bolts loose?	Secure tightly		○	
Is there any discoloration due to excess heat?	Visual inspection		○	

Cooling system - ventilation duct

Inspection item	Inspection method	Maintenance cycle		
		Daily	6 months	One year
Are heat sinks or vents blocked or attached with abnormal objects?	Hearing		○	

NOTE

Wipe the contaminated area clean with a chemically-neutral cleaning cloth. Clean with an electric dust cleaner.

9-2 Grease Problems

Precautions for industries where grease pollution is more serious, typically machining, punching, or other processing industries:

1: grease accumulating on electrical components may cause components to short, resulting in explosions.

2: most are mildly corrosive, and will likely damage this product.

Recommended procedure: Users are recommended to install the power regenerative unit in a dedicated cabinet, as far away from grease as possible, and clean it regularly to prevent the power regenerative unit from being polluted and damaged by grease.

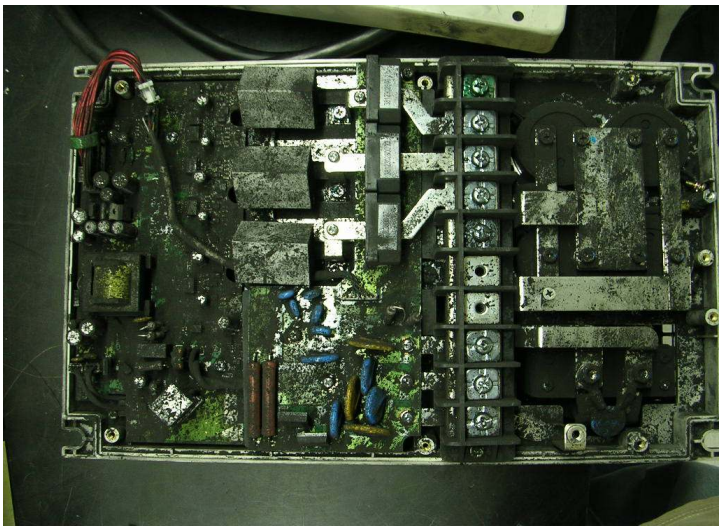

9-3 Lint Problems

Precautions for industries where lint pollution is more serious, typically textile industries:
1: lint often floats in the air and accumulates on fans and other devices, blocking the ventilation system in the power regenerative unit, resulting in overheating.
2: textile factories are often humid, and lint easily collects water vapor, causing components on the circuit boards to short, in turn resulting in damage or explosions.

Recommended procedure: Users are recommended to install the power regenerative unit in a dedicated cabinet, and clean it regularly to prevent lint from accumulating in the power regenerative unit.

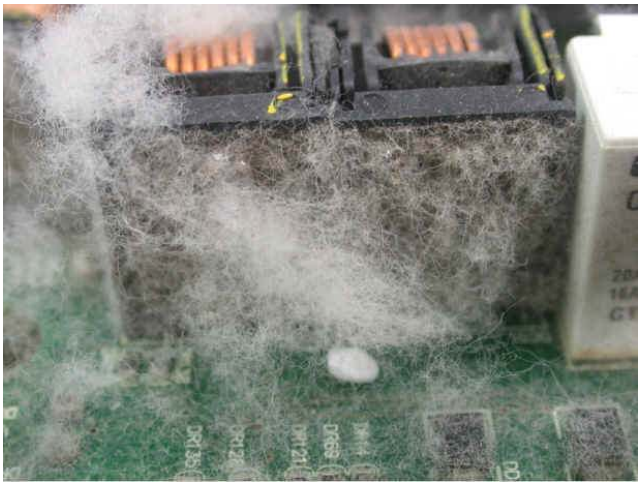

9-4 Corrosion Problems

Precautions for situations with corrosive materials, typically unknown liquids flowing into the power regenerative unit: If the inner electrical components are corroded, it may lead to damage in the power regenerative unit causing malfunctions or even explosions.

Recommended procedure: Users are recommended to install the power regenerative unit in a dedicated cabinet, and by all means prevent liquids from flowing into the power regenerative unit, and clean it regularly to prevent the power regenerative unit from corrosion.

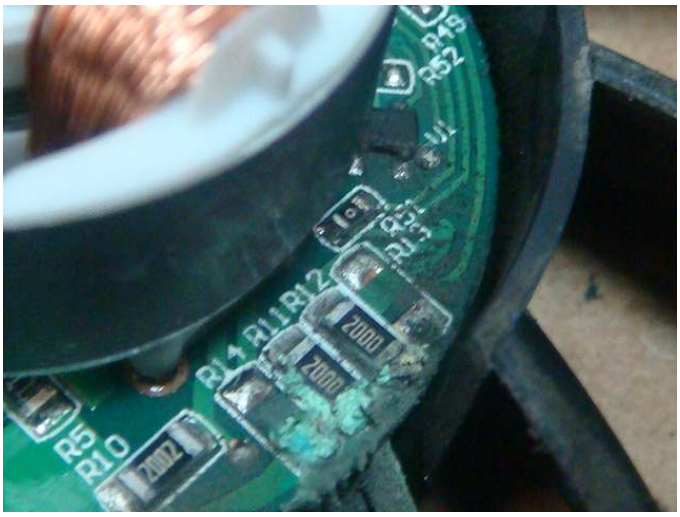

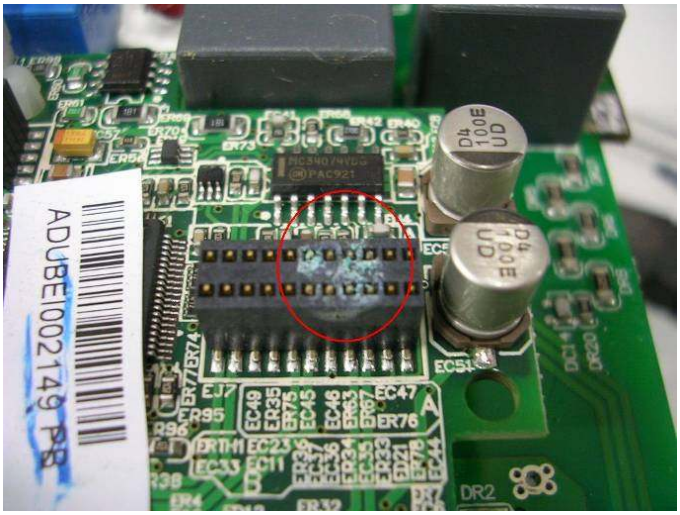

9-5 Dust Problems

Precautions for places where dust pollution is more serious, typically environments filled with dust such as stone processing plants, flour mills, or cement factories:

1: dust accumulating on the electrical components may cause overheating, thereby shortening the life of the product.

2: if the dust is conductive, they will very likely cause damage to the circuit and possibly explosions.

Recommended procedure: Users are recommended to install the power regenerative unit in a dedicated cabinet with a dust cover, and clean the cabinet and air ducts regularly so that the power regenerative unit may dissipate heat normally.

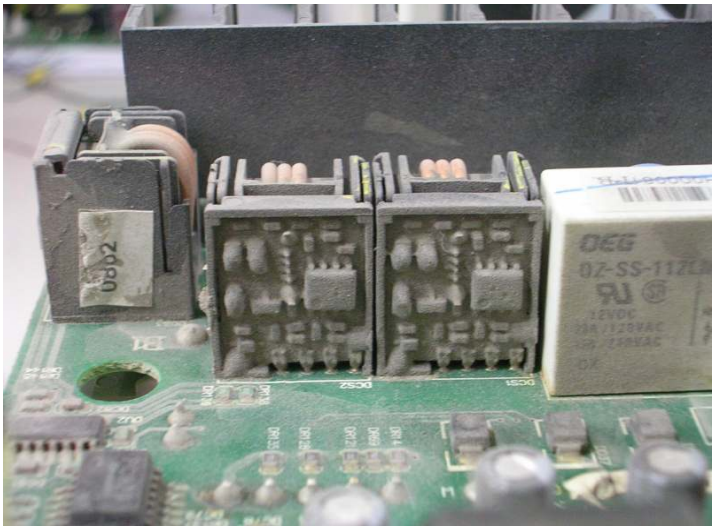

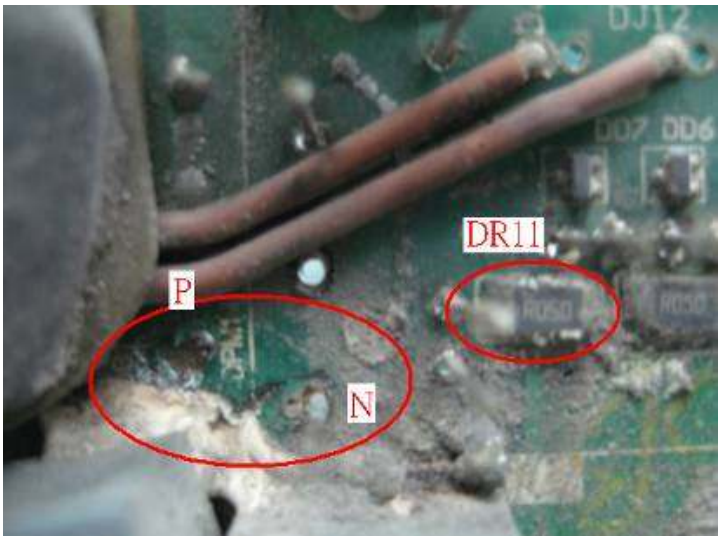

9-6 Installation and Wiring Problems

Precautions on wiring: these types of error usually occur due to improper wiring by the customer.
Effects on the product:
(1) Loose wiring screws may lead to an increase in the contact resistance, causing arcing and damage to the power regenerative unit.
(2) Tampering with the circuits inside the power regenerative unit by users may cause damage to relevant components.

Recommended procedure: Secure all wiring screws tightly when installing the power regenerative unit! If the machine malfunctions, do not attempt to fix the problem yourself, please send the product to a specialized service center for repair!

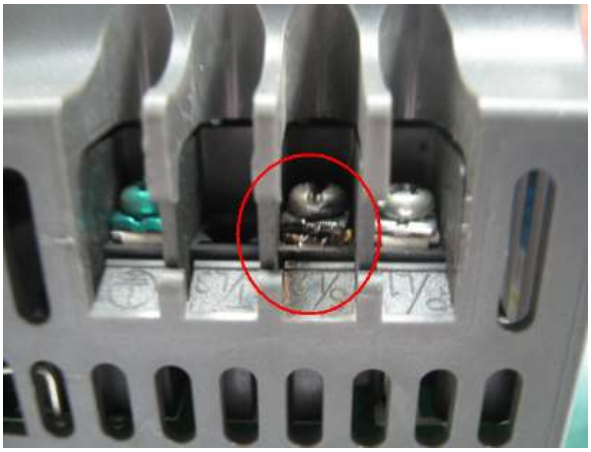

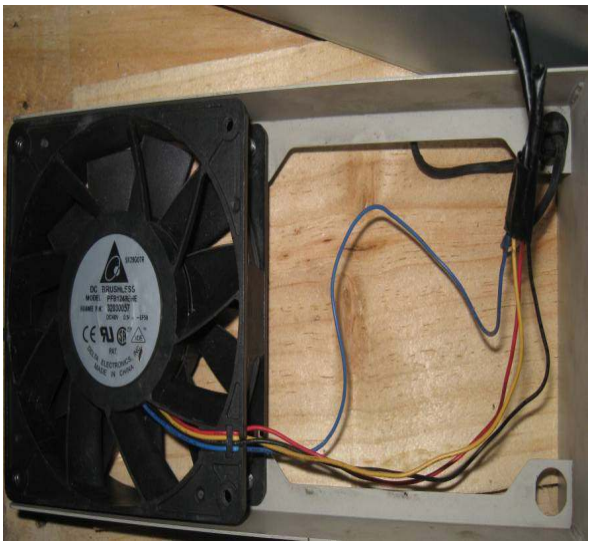

9-7 Multi-function Input/Output Terminal Application Problems

These types of error usually happen when the external I/O are abused; Precautions when using the external I/O functions: I/O related circuit components will be burned by the excessive energy and lose their function!

Recommended procedure: Refer to the voltage and current specifications in the manual when using these I/O contacts. Never exceed the specified limits!

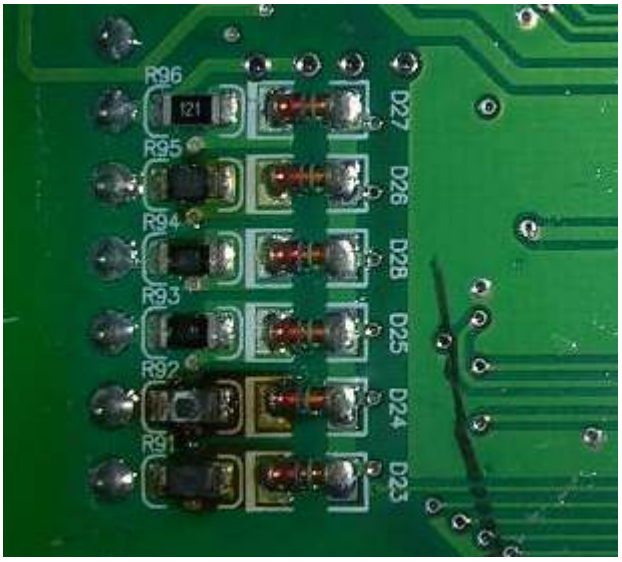

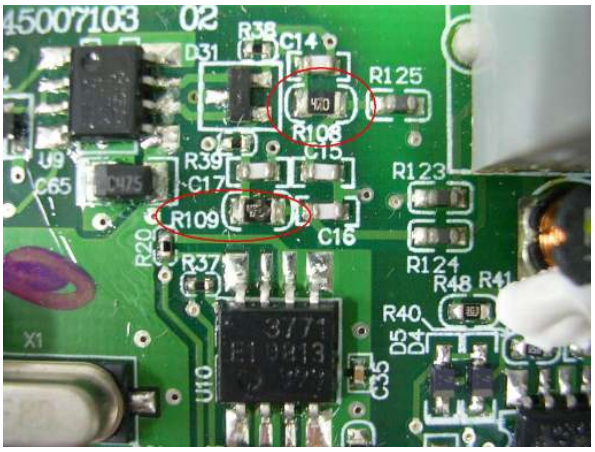

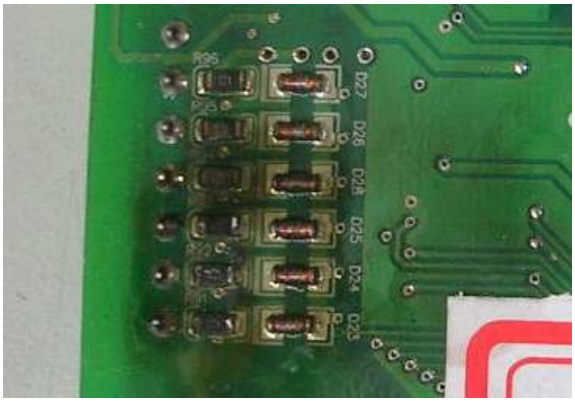

10 Power Regenerative Unit Selection

Delta offers four model selection methods of REG2000:

A. Make selection base on the specs of brake resistor. Suit for applications that require to perform rapid acceleration and deceleration, such as tapping drilling machines and lathes.
B. Make selection base on the overload ability of drive. The servo drive has higher overload ability than the AC motor drive.
C. Make selection base on the load characteristics of applications. Calculate the regenerated power of the application using the application's system characteristics and specifications, especially for elevator and hoist application.
D. REG2000 Sizing Wizard developed by Delta:

中文: http://deltavfdsizingtool.deltaww.com/REG2000/TC/index.html

ENGLISH: http://deltavfdsizingtool.deltaww.com/REG2000/EN/index.html

The three model selection methods are described in more detail below:

Model selection method 1 (base on the specs of brake resistor)

Take 220V as an example, if a 1500W 13Ω brake resistor is selected, with brake level set to 380V, then the total braking current would be 380V / 13Ω = 29A.

DC power equals AC power, i.e. Vdc * Idc = $\sqrt{3}$ * Vac * Iac

Vac is AC voltage

Iac is AC current

Vdc is DC voltage

Idc is DC current

i.e. Iac = (Vdc * Idc) / ($\sqrt{3}$ *Vac) = (380*29) / ($\sqrt{3}$ *220) = 28.9A

The brake resistor's braking torque is 125% at 10%ED, and REG2000 is 150% at 10%ED, therefore selections can be made using REG2000's current at 150% in the following tables. In this example, REG075A23A-21 can be selected, as the current at 150% of 30A > total braking current of 28.9A

230V Series

Frames		A		B			C	
Model REG_ _ _A23A-21		075	110	150	185	220	300	370
Rated Power(kW)		7.5	11	15	18.5	22	30	37
Mains	Input current(A)	20	32	38	49	60	80	100
	Input current at 150%	30	48	57	73.5	90	120	150

460V Series

Frames		A			B			C		
Model REG_ _ _A43A-21		075	110	150	185	220	300	370	450	550
Rated Power(kW)		7.5	11	15	18.5	22	30	37	45	55
Mains	Input current(A)	10.5	17	20	25	32	43	49	60	75
	Input current at 150%	15.8	25.5	30	37.5	48	64.5	73.5	90	112.5

*Please contact Delta if the required current exceeds those listed above.

Model selection method 2 (base on the overload ability of drive)

Make the selection based on the overload ability of the drive. The table as below is an example that C2000 using with REG2000 when the condition is 10%ED and maximum regenerated work time during one cycle is 10sec. The overload ability of C2000 is 160% 3sec and 120% 60sec base on rated output current

Voltage	10%ED 10s		
	Drive	REG selection	
	kW	Model	Quantity
220V	0.7	REG075A23A	1
	1.5	REG075A23A	1
	2.2	REG075A23A	1
	3.7	REG075A23A	1
	5.5	REG075A23A	1
	7.5	REG075A23A	1
	11	REG110A23A	1
	15	REG110A23A	1
	18	REG150A23A	1
	22	REG185A23A	1
	30	REG220A23A	1
	37	REG300A23A	1
	45	REG370A23A	1
	55	Please contact Delta Electronics	-
	75		
	90		

Voltage	10%ED 10s		
	Drive	REG selection	
	kW	Model	Quantity
440V	0.7	REG075A43A	1
	1.5	REG075A43A	1
	2.2	REG075A43A	1
	3.7	REG075A43A	1
	4	REG075A43A	1
	5.5	REG075A43A	1
	7.5	REG075A43A	1
	11	REG075A43A	1
	15	REG110A43A	1
	18	REG150A43A	1
	22	REG185A43A	1
	30	REG220A43A	1
	37	REG300A43A	1
	45	REG370A43A	1
	55	REG450A43A	1
	75	REG550A43A	1
	90	Please contact Delta Electronics	-
	110		
	132		
	160		
	185		
	220		
	280		
	315		
	355		

Model selection method 3 (base on the load characteristics of applications)

Crane/Hoist Application

The equipment weighs 10 tons, drive model: VFD075CH43A, with a 5.5kW motor

From the crane's specification we know

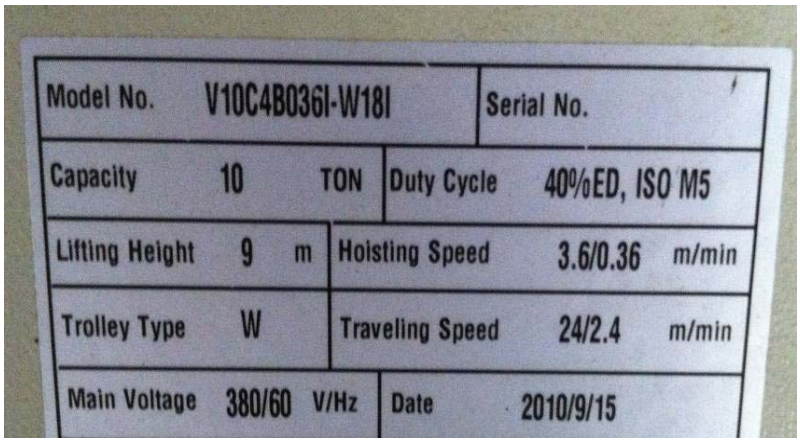

Model No.	V10C4B036I-W18I	Serial No.	
Capacity	10 TON	Duty Cycle	40%ED, ISO M5
Lifting Height	9 m	Hoisting Speed	3.6/0.36 m/min
Trolley Type	W	Traveling Speed	24/2.4 m/min
Main Voltage	380/60 V/Hz	Date	2010/9/15

1. In high-speed operation, the time it takes from top to bottom is 9(m)/3.6(m/min) = 2.5(min) = 150(sec)
2. Assuming the motor efficiency is 85%, mechanical efficiency is 85%, and the drive and the REG2000's efficiencies are both 95%, the useful power output would be 5.5kW*0.85^2*0.95^2 = 3.57kW
3. When using the REG2000, and mains voltage is 380V, the current would be 3.57kW/(sqrt(3)*380V) = 5.4 A
4. From the table below, at 40%ED, and a working duration of 150s, the output current must be lower than 90% of the rated current to not cause overloading.
5. From the specification sheet, REG075A43A-21rated current is 10.5A, 10.5A*90% = 9.45A > 5.4A therefore, in this case, we can select REG075A43A-21

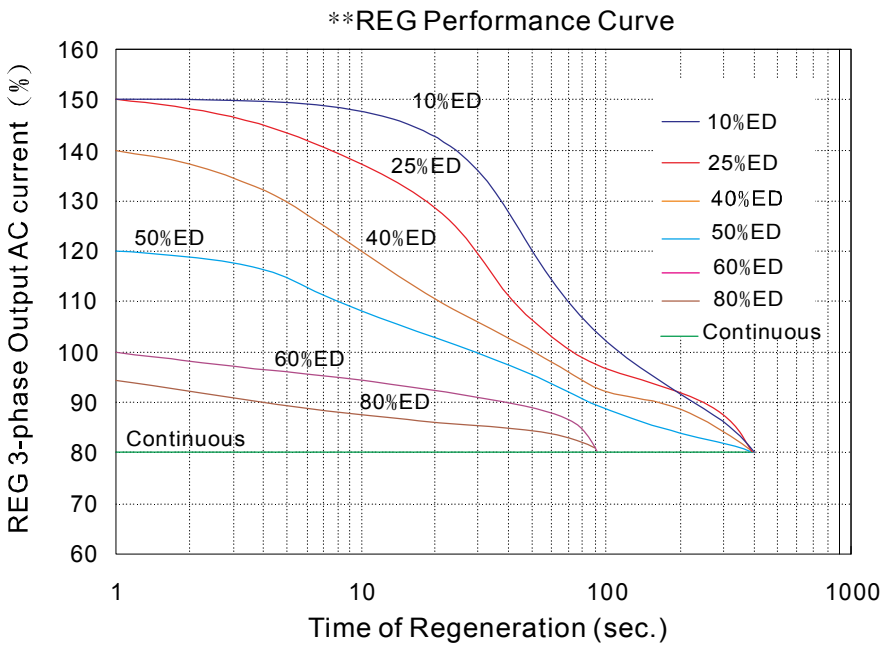

※ The diagram above shows the testing result by combining REG and DC choke.

Definition of ED%: See Ch03 Specifications.

Elevator Application

In an elevator with 2 ton working load, a speed of 60m/min, floors from B1 - 4F, using 22kW motor, and a counterweight of 48%

1. The elevator takes 30s to reach 4F from B1, the whole trip takes 100s, then ED = 30/100 = 30%
2. Assuming the motor efficiency is 85%, mechanical efficiency is 85%, and the drive and the power feedback unit's efficiencies are both 95%, the useful power output would be 22kW*85%*85%*95%*95% = 14.3kW
3. When using the REG2000, and mains voltage is 380V, the current would be 14.3kW/(sqrt(3)*380V) = 21.8 A
4. From the table below, at 30%ED, and a working duration of 30s, the output current must be lower than 115% of the rated current to not cause overloading.
5. From the specification sheet,
   REG110A43A-21 if rated current is 17A, 17A*115% = 19.55A < 21.8A,
   REG150A43A-21 if rated current is 20A, 20A*115% = 23A > 21.8A,
   Therefore, in this case, we can select REG150A43A-21.