ENGINEERING
TOMORROW

Design Guide

VLT® AutomationDrive FC 301/302
0.25–75 kW

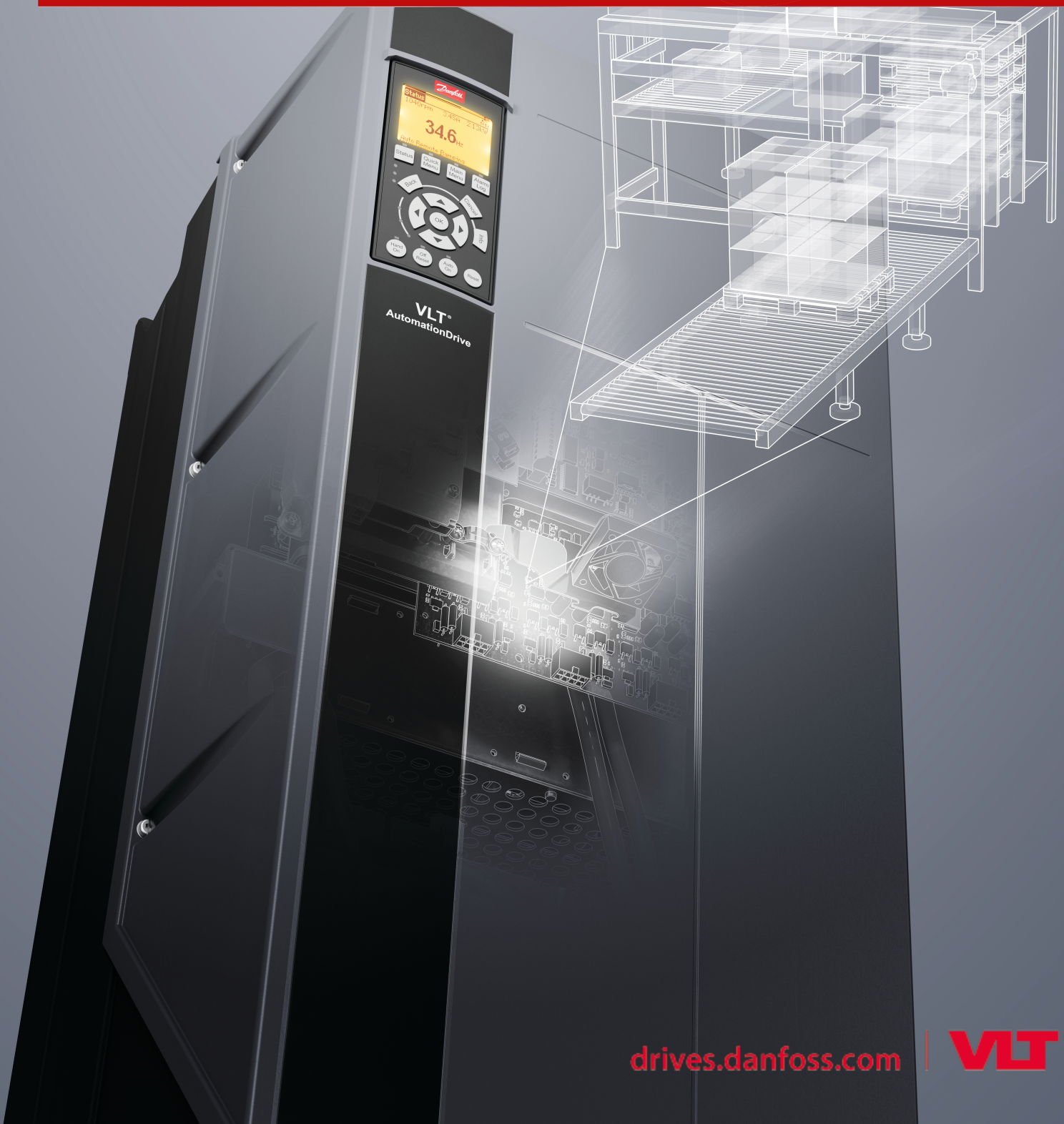

drives.danfoss.com | VLT®

Contents

1 Introduction 12
1.1 Purpose of this Design Guide 12
1.2 Trademarks 12
1.3 Additional Resources 12
1.4 Document Version 13
1.5 Conventions 13

2 Safety 14
2.1 Safety 14
2.2 Safety Symbols 14
2.3 Qualified Personnel 14

3 Approvals and Certifications 15
3.1 Regulatory/Compliance Approvals 15
3.2 Typical Product Approvals and Certifications for VLT® Drives 15
3.3 Export Control Regulation 18
3.4 Enclosure Protection Rating 18

4 VLT® Product Family Overview 19
4.1 VLT® Drives 19
4.2 Product Overview of the VLT® AutomationDrive FC 301/302 19
4.3 Power Drive Systems 23
4.3.1 Ecodesign for Power Drive Systems 23
4.3.1.1 Losses in Mains Cabling 25
4.3.1.2 Input Filters: Line Reactors and Harmonic Filters 25
4.3.1.3 Drive, Input Side 26
4.3.1.4 DC Link 27
4.3.1.5 Drive, Output Side 28
4.3.1.6 Motor Cables and Motor 29

5 Product Overview 30
5.1 Overview of Drives Systems 30
5.1.1 Filter Options 30
5.1.1.1 Protection of Motor Insulation 31
5.1.1.2 Reduction of Motor Acoustic Noise 31
5.1.1.3 Reduction of High-frequency Electromagnetic Noise in Motor Cables 31
5.1.1.4 Bearing Currents and Shaft Voltage 31
5.1.2 Supported Motor Types 32
5.1.3 Bearing Currents 33
5.2 Integrated Motion Controller 36

5.2.1 Positioning, Homing, and Synchronization 36
5.2.1.1 Positioning 36
5.2.1.2 Homing 37
5.2.1.3 Synchronization 37
5.2.1.4 Fieldbus References 38
5.2.2 Control 39
5.2.2.1 Control Loops 39
5.2.2.2 Control and Status Signals 40
5.3 Functional Safety 42
5.3.1 Protection of Personnel and Equipment 42
5.3.2 VLT® Safety Option MCB 150 and MCB 151 42
5.3.3 VLT® Sensorless Safety MCB 159 43
5.3.4 VLT® Safety Option MCB 152 43
5.3.5 Safety Functions 43
5.4 Danfoss VLT® FlexConcept® 45
5.5 Torque Sharing/Droop 46
5.6 Power Limit Function 47
5.7 Service Log 49
5.8 Maintenance Functions 49

6 Product Features 52
6.1 Automated Operational Features 52
6.1.1 Short-circuit Protection 52
6.1.2 Overvoltage Protection 52
6.1.3 Missing Motor Phase Detection 53
6.1.4 Mains Phase Imbalance Detection 53
6.1.5 Switching on the Output 53
6.1.6 Overload Protection 54
6.1.7 Locked Rotor Protection 54
6.1.8 Automatic Derating 54
6.1.8.1 Overview of Automatic Derating 55
6.1.8.2 Sine-wave Filter Fixed Mode 56
6.1.8.3 Overview Table 57
6.1.8.4 High Motor Load 58
6.1.8.5 High Voltage on the DC link 58
6.1.8.6 Low Motor Speed 58
6.1.8.7 High Internal Temperature 59
6.1.8.8 Current 60
6.1.9 Automatic Energy Optimization 60
6.1.10 Automatic Switching Frequency Modulation 61
6.1.11 Automatic Derating for High Switching Frequency 61
6.1.12 Power Fluctuation Performance 61

6.1.13 Resonance Damping 61
6.1.14 Temperature-controlled Fans 61
6.1.15 EMC Compliance 61
6.1.16 Galvanic Isolation of Control Terminals 62
6.2 Custom Application Features 62
6.2.1 Automatic Motor Adaptation (AMA) 62
6.2.2 Motor Thermal Protection 62
6.2.3 Motor Thermal Protection for Ex-e or Ex-n Motors 63
6.2.4 Mains Dropout 65
6.2.5 Built-in PID Controller 65
6.2.6 Automatic Restart 65
6.2.7 Flying Start 65
6.2.8 Full Torque at Reduced Speed 65
6.2.9 Frequency Bypass 66
6.2.10 Motor Preheat 66
6.2.11 Programmable Set-ups 66
6.2.12 Smart Logic Controller 66
6.2.13 Safe Torque Off 68
6.3 Dynamic Braking Overview 68
6.4 Mechanical Holding Brake Overview 69
6.4.1 Open-loop Mechanical Brake Control 69
6.4.2 Closed-loop Mechanical Brake Control/Hoist Mechanical Brake 70
6.5 Load Sharing Overview 71
6.5.1 Preconditions and Special Conditions 72
6.5.2 Combinations of Enclosure Sizes 73
6.6 Regen Overview 74

7 Options and Accessories Overview 76

7.1 Introduction 76
7.2 VLT® FC Series Options Concept 76
7.3 VLT® Fieldbus Options 77
7.4 VLT® Functional Extensions 78
7.5 VLT® Programmable Controllers 78
7.6 VLT® Power Options 79
7.6.1 VLT® Harmonic Filters 79
7.6.2 VLT® Sine-wave Filters 79
7.6.3 VLT® dU/dt Filters 80
7.6.4 VLT® Common-mode Filters 80
7.6.5 VLT® Brake Resistors 80
7.6.6 VLT® Line Reactors 81
7.7 Kits and Accessories 81
7.7.1 Panel Through Mounting Kits for VLT® FC Series Enclosure Sizes A, B, and C 81

7.7.2 IP21/NEMA Type 1 Enclosure Kits for VLT® FC Series Enclosure Sizes A, B, and C 82
7.7.3 Mounting Brackets for VLT® FC Series Enclosure Sizes A5, B1, B2, C1, and C2 86
7.7.4 Remote Mounting Kits for LCP 88
7.7.4.1 Remote Mounting Kit for LCP 102 and LCP 103 with Cover for Outdoor Mounting 88
7.7.4.2 Panel Mounting Kit for LCP 102, LCP 101, and LCP 103 89
7.7.5 VLT® Wireless Communication Panel LCP 103 and MyDrive® Connect 91

8 Specifications 92
8.1 Enclosure Size by Power Rating 92
8.2 Electrical Data 94
8.2.1 Mains Supply 3x200–240 V AC, T2 94
8.2.2 Mains Supply 3x380–480 V AC, FC 301 T4 and 3x380–500 V AC, FC 302 T5 97
8.2.3 Mains Supply 3x525–600 V AC, T6 101
8.2.4 Mains Supply 3x525–690 V AC, T7 105
8.2.5 Power Cable Cross-sections 108
8.3 Mains Supply 109
8.4 Motor Output and Motor Data 109
8.4.1 Motor Output (U, V, W) 109
8.4.2 Torque Characteristics 110
8.5 Ambient Conditions 110
8.6 Cable Specifications 111
8.6.1 Cable Lengths and Cross-sections for Control Cables 111
8.7 Control Input/Output and Control Data 111
8.7.1 Digital Inputs 111
8.7.2 STO Terminal 37 111
8.7.3 Analog Inputs 112
8.7.4 Pulse/Encoder Inputs 112
8.7.5 Digital Outputs 113
8.7.6 Analog Output 113
8.7.7 Control Card, 24 V DC Output 114
8.7.8 Control Card, +10 V DC Output 114
8.7.9 Control Card, RS485 Serial Communication 114
8.7.10 Control Card, USB Serial Communication 114
8.7.11 Relay Outputs 114
8.7.12 Control Card Performance 115
8.7.13 Control Characteristics 115
8.8 Connection Tightening Torques 116
8.9 Power Ratings, Weight, and Dimensions 117

9 Mechanical Installation Considerations 122
9.1 Storage 122
9.2 Operating Environment 122

9.2.1 Gases 122
9.2.2 Dust 123
9.2.3 Outdoor Installation in freezing Temperature Environments 124
9.2.4 Potentially Explosive Atmospheres 125
9.2.5 Vibration and Shock 126
9.2.6 Maintenance 126
9.3 Mounting Configurations 126
9.3.1 Side-by-side Mounting 126
9.3.2 Wall Mounting 128
9.4 Derating 129
9.4.1 Derating for Running at Low Speed 129
9.4.2 Derating for Low Air Pressure 130
9.4.3 Derating for Ambient Temperature and Switching Frequency 131
9.4.3.1 Derating for Ambient Temperature, Enclosure Size A 131
9.4.3.2 Derating for Ambient Temperature, Enclosure Size B 132
9.4.3.3 Derating for Ambient Temperature, Enclosure Size C 137

10 Electrical Installation Considerations 141
10.1 Safety Instructions 141
10.2 Wiring Schematic 143
10.3 Connections 144
10.3.1 Power Connections 144
10.3.2 IT Grid Connection 145
10.3.3 DC Bus Connection 146
10.3.4 Load Sharing Connection 146
10.3.5 Brake Cable Connection 147
10.3.6 Grounding 147
10.3.7 Safety Ground Connection 147
10.4 Cables 147
10.4.1 EMC-correct Cables 147
10.4.2 Preparing Cable Entry Holes 149
10.4.3 Specifications of Entry Holes 149
10.4.3.1 Entry Holes, Enclosure Size A2, IP21 149
10.4.3.2 Entry Holes, Enclosure Size A3, IP21 150
10.4.3.3 Entry Holes, Enclosure Size A4, IP55 150
10.4.3.4 Entry Holes, Enclosure Size A4, IP55 Threaded Gland Holes 151
10.4.3.5 Entry Holes, Enclosure Size A5, IP55 151
10.4.3.6 Entry Holes, Enclosure Size A5, IP55 Threaded Gland Holes 152
10.4.3.7 Entry Holes, Enclosure Size B1, IP21 152
10.4.3.8 Entry Holes, Enclosure Size B1, IP55 153
10.4.3.9 Entry Holes, Enclosure Size B1, IP55 Threaded Gland Holes 153
10.4.3.10 Entry Holes, Enclosure Size B2, IP21 154

10.4.3.11 Entry Holes, Enclosure Size B2, IP55 155
10.4.3.12 Entry Holes, Enclosure Size B2, IP55 Threaded Gland Holes 155
10.4.3.13 Entry Holes, Enclosure Size B3, IP21 156
10.4.3.14 Entry Holes, Enclosure Size C1, IP21 156
10.4.3.15 Entry Holes, Enclosure Size C2, IP21 157
10.4.4 Tightening Torques for Cover 157
10.5 Control Wiring and Terminals 158
10.5.1 Shielded Control Cables 158
10.5.2 Wiring to Control Terminals 159
10.5.3 Control Terminal Types 160
10.5.4 Terminal Descriptions 161
10.6 Fuses and Circuit Breakers 162
10.6.1 Fuse Recommendations 162
10.6.2 CE Compliance 163
10.6.3 UL Compliance 166
10.7 Relays 168
10.7.1 Overview of Relay Terminals 170
10.8 Disconnects and Contactors 171
10.9 Motor 173
10.9.1 Motor Thermal Protection 174
10.9.2 Parallel Connection of Motors 174
10.9.3 Motor Insulation 175
10.9.4 Motor Bearing Currents 176
10.10 Braking 176
10.10.1 Selection of Brake Resistor 176
10.10.2 Control with Brake Function 179
10.11 Residual Current Device 180
10.12 Leakage Current 180
10.12.1 Using a Residual Current Device (RCD) 182
10.13 Efficiency 183
10.14 Acoustic Noise and Airflow 184
10.15 dU/dt Conditions 185
10.15.1 dU/dt Values, 200–240 V (T2) 186
10.15.1.1 dU/dt Values for P5K5T2, 200–240 V 186
10.15.1.2 dU/dt Values for P7K5T2, 200–240 V 186
10.15.1.3 dU/dt Values for P11KT2, 200–240 V 186
10.15.1.4 dU/dt Values for P15KT2, 200–240 V 187
10.15.1.5 dU/dt Values for P18KT2, 200–240 V 187
10.15.1.6 dU/dt Values for P22KT2, 200–240 V 187
10.15.1.7 dU/dt Values for P30KT2, 200–240 V 187
10.15.1.8 dU/dt Values for P37KT2, 200–240 V 187
10.15.2 dU/dt Values, 380–480 V (T4) 188

10.15.2.1 dU/dt Values for P1K5T4, 380–480 V 188
10.15.2.2 dU/dt Values for P4K0T4, 380–480 V 188
10.15.2.3 dU/dt Values for P7K5T4, 380–480 V 188
10.15.2.4 dU/dt Values for P11KT4, 380–480 V 188
10.15.2.5 dU/dt Values for P15KT4, 380–400 V 189
10.15.2.6 dU/dt Values for P18KT4, 380–480 V 189
10.15.2.7 dU/dt Values for P22KT4, 380–480 V 189
10.15.2.8 dU/dt Values for P30KT4, 380–480 V 189
10.15.2.9 dU/dt Value for P37KT4, 380–480 V 190
10.15.2.10 dU/dt Values for P45KT4, 380–480 V 190
10.15.3 dU/dt Values, 380–500 V (T5) 190
10.15.3.1 dU/dt Values for P55KT5, 380–500 V 190
10.15.3.2 dU/dt Values for P75KT5, 380–500 V 190
10.15.4 dU/dt Values, 600 V (T6) 190
10.15.4.1 dU/dt Values for P15KT6, 600 V 191
10.15.4.2 dU/dt Values for P30KT6, 600 V 191
10.15.4.3 dU/dt Values for P75KT6, 600 V 191
10.15.5 dU/dt Values, 525–690 V (T7) 191
10.15.5.1 dU/dt Values for P7K5T7, 525–690 V 191
10.15.5.2 dU/dt Values for P45KT7, 525–690 V 192
10.16 Electromagnetic Compatibility (EMC) Overview 192
10.16.1 EMC Test Results 192
10.16.2 Emission Requirements 193
10.16.3 Immunity Requirements 194
10.16.4 EMC Compatibility 196
10.17 EMC-compliant Installation 197
10.18 Harmonics Overview 200
10.18.1 Harmonics Analysis 200
10.18.2 Effect of Harmonics in a Power Distribution System 201
10.18.3 IEC Harmonic Standards 202
10.18.4 Harmonic Results (Emission) 203
10.18.5 Harmonic Mitigation 204
10.18.6 Harmonic Calculation 205
10.18.7 Line Reactors 205

11 Basic Operating Principles 206

11.1 Introduction 206
11.2 Drive Controls 206
11.2.1 Control Principle 206
11.2.2 Local (Hand On) and Remote (Auto On) Control 207
11.3 Reference Limits 209
11.4 PID Control 211

11.4.1 Speed PID Control 211
11.4.2 Tuning PID Speed Control 212
11.4.3 Process PID Control 212
11.4.4 Advanced PID Control 213
11.5 More Operating Principles 213
11.5.1 FC 301 versus FC 302 Control Principle 214
11.5.2 Control Structure in VVC+ 215
11.5.3 Control Structure in Flux Sensorless 216
11.5.4 Control Structure in Flux with Motor Feedback 217

12 How to Order a Drive 218

12.1 Drive Configurator 218
12.1.1 Type Code 218
12.1.2 Language Packages 221
12.2 Order Numbers for Options and Accessories 222
12.2.1 Order Numbers for Options for Slot A 222
12.2.2 Order Numbers for Options for Slot B 222
12.2.3 Order Numbers for Options for Slot C 223
12.2.4 Order Numbers for Options for Slot D 223
12.2.6 Order Numbers for Miscellaneous Hardware 224
12.2.7 Order Numbers for Local Control Panel Options 225
12.2.8 Order Numbers for PC Software 226
12.2.9 Ordering of VLT® Brake Resistors MCE 101 226
12.2.9.1 Order Numbers for Brake Resistors FC 301, T2, Horizontal Braking 10% Duty Cycle 227
12.2.9.2 Order Numbers for Brake Resistors FC 301, T2, Vertical Braking 40% Duty Cycle 228
12.2.9.3 Order Numbers for Brake Resistors FC 301, T2, Flat-pack for Horizontal Conveyors 229
12.2.9.4 Order Numbers for Brake Resistors FC 301, T4, Horizontal Braking 10% Duty Cycle 229
12.2.9.5 Order Numbers for Brake Resistors FC 301, T4, Vertical Braking 40% Duty Cycle 231
12.2.9.6 Order Numbers for Brake Resistors FC 301, T4, Flat-pack for Horizontal Conveyors 232
12.2.9.7 Order Numbers for Brake Resistors FC 302, T2, Horizontal Braking 10% Duty Cycle 232
12.2.9.8 Order Numbers for Brake Resistors FC 302, T2, Vertical Braking 40% Duty Cycle 233
12.2.9.9 Order Numbers for Brake Resistors FC 302, T2, Flat-pack for Horizontal Conveyors 234
12.2.9.10 Order Numbers for Brake Resistors FC 302, T5, Horizontal Braking 10% Duty Cycle 235
12.2.9.11 Order Numbers for Brake Resistors FC 302, T5, Vertical Braking 40% Duty Cycle 236
12.2.9.12 Order Numbers for Brake Resistors FC 302, T5, Flat-pack for Horizontal Conveyors 237
12.2.9.13 Order Numbers for Brake Resistors FC 302, T6, Horizontal Braking 10% Duty Cycle 237
12.2.9.14 Order Numbers for Brake Resistors FC 302, T6, Vertical Braking 40% Duty Cycle 239
12.2.9.15 Order Numbers for Brake Resistors FC 302, T7, Vertical Braking 40% Duty Cycle 240
12.2.10 Order Numbers for Accessory Bags 241
12.2.11 Ordering of Harmonic Filters 241
12.2.11.1 Order Numbers for Harmonic Filters, 380–415 V, 50 Hz 242
12.2.11.2 Order Numbers for Harmonic Filters, 380–415 V, 60 Hz 243

12.2.11.3 Order Numbers for Harmonic Filters, 440–480 V, 60 Hz 245
12.2.11.4 Order Numbers for Harmonic Filters, 600 V, 60 Hz 246
12.2.11.5 Order Numbers for Harmonic Filters, 500–690 V, 50 Hz 248
12.2.12 Order Numbers for VLT® Sine-wave Filters MCC 101 249
12.2.13 Order Numbers for VLT® dU/dt Filters MCC 102 250
12.2.15 Spare Parts 252

13 Appendix 253
13.1 Symbols and Abbreviations 253

1 Introduction

1.1 Purpose of this Design Guide

This Design Guide is intended for qualified personnel, such as:

- Project and systems engineers.
- Design consultants.
- Application and product specialists.

The Design Guide provides technical information to understand the capabilities of the VLT® AutomationDrive FC 301/FC 302 for integration into motor control and monitoring systems. Its purpose is to provide design considerations and planning data for integration of the drive into a system. It caters for selection of drives and options for a diversity of applications and installations. Reviewing the detailed product information in the design stage enables developing a well-conceived system with optimal functionality and efficiency.

This manual is targeted at a worldwide audience. Therefore, wherever occurring, both SI and imperial units are shown.

1.2 Trademarks

VLT® is a registered trademark for Danfoss A/S.

1.3 Additional Resources

Various resources are available to understand advanced drive operation, programming, and directives compliance.

- The **VLT® AutomationDrive FC 301/302 Operating Guide** provides detailed information for the installation and start-up of the drive.
- The **VLT® AutomationDrive FC 301/302 Programming Guide** provides greater detail on how to work with parameters. It also contains application examples.
- The **VLT® Condition-based Monitoring Programming Guide** provides information on working with condition-based monitoring parameters on the VLT® FC series AC drives.
- The **VLT® Integrated Motion Control Application Guide** provides information on working with the Integrated Motion Controller (IMC) feature. The guide shows application examples, and presents the functionalities while showing required parameter settings and connections.
- The **VLT® Safe Torque Off Operating Guide** describes how to use Danfoss VLT® drives in functional safety applications. This manual is supplied with the drive when the Safe Torque Off option is present.
- The **VLT® Brake Resistor MCE 101 Design Guide** describes how to select the optimal brake resistor.
- The **VLT® Advanced Harmonic Filters AHF 005/AHF 010 Design Guide** describes harmonics, various mitigation methods, and the operation principle of the advanced harmonic filter. This guide also describes how to select the correct advanced harmonics filter for a particular application.
- The **Output Filter Design Guide** explains why it is necessary to use output filters for certain applications and how to select the optimal dU/dt or sine-wave filter.
- Supplemental publications, drawings, EPLAN macros, and manuals are available at www.danfoss.com.

Optional equipment is available that may change some of the information described in these publications. Be sure to follow the instructions supplied with the options for specific requirements.

Contact a Danfoss supplier or visit www.danfoss.com for more information.

1.4 Document Version

This manual is regularly reviewed and updated. All suggestions for improvement are welcome.

The original language of this manual is English.

Table 1: Document Version

Edition	Remarks
MG33BGxx	New document structure. All chapters updated.

1.5 Conventions

- Numbered lists indicate procedures.
- Bulleted and dashed lists indicate listings of other information where the order of the information is not relevant.
- Bolded text indicates highlighting and section headings.
- Italicized text indicates the following:
  - Cross-reference.
  - Link.
  - Footnote.
  - Parameter name.
  - Parameter option.
  - Parameter group name.
  - Alarms/warnings.
- All dimensions in drawings are in metric values (imperial values in brackets).
- An asterisk (*) indicates the default setting of a parameter.

2 Safety

2.1 Safety

When designing AC drives, some residual dangers cannot be avoided constructively. One example is the discharge time, which is very important to observe to avoid potential death or serious injury. For the Danfoss VLT® drives, the discharge time is from 4–40 minutes depending on the drive size.

For further information on safety precautions, refer to the product-specific Operating Guide.

2.2 Safety Symbols

The following symbols are used in this manual:

⚠ DANGER ⚠

Indicates a hazardous situation which, if not avoided, will result in death or serious injury.

⚠ WARNING ⚠

Indicates a hazardous situation which, if not avoided, could result in death or serious injury.

⚠ CAUTION ⚠

Indicates a hazardous situation which, if not avoided, could result in minor or moderate injury.

NOTICE

Indicates information considered important, but not hazard-related (for example, messages relating to property damage).

2.3 Qualified Personnel

To allow trouble-free and safe operation of the unit, only qualified personnel with proven skills are allowed to transport, store, assemble, install, program, commission, maintain, and decommission this equipment.

Persons with proven skills:

- Are qualified electrical engineers, or persons who have received training from qualified electrical engineers and are suitably experienced to operate devices, systems, plant, and machinery in accordance with pertinent laws and regulations.
- Are familiar with the basic regulations concerning health and safety/accident prevention.
- Have read and understood the safety guidelines given in all manuals provided with the unit, especially the instructions given in the Operating Guide.
- Have good knowledge of the generic and specialist standards applicable to the specific application.

3 Approvals and Certifications

3.1 Regulatory/Compliance Approvals

This section provides a brief description of the various approvals and certifications that are on Danfoss VLT® drives. Not all approvals are on all drives.

NOTICE

IMPOSED LIMITATIONS ON THE OUTPUT FREQUENCY

From software version 6.72 onwards, the output frequency of the drive is limited to 590 Hz due to export control regulations. Software versions 6.xx also limit the maximum output frequency to 590 Hz, but these versions cannot be flashed, that is, neither downgraded nor upgraded.

3.2 Typical Product Approvals and Certifications for VLT® Drives

The VLT® AutomationDrive product series complies with a wide scope of required standards and directives. Information on the specific product certifications can be found on the product nameplate.

3.2.1 CE Mark

The drive complies with relevant directives and their related standards for the extended Single Market in the European Economic Area.

Table 2: EU directives applicable to drives

EU Directive	Version
Low Voltage Directive	2014/35/EU
EMC Directive	2014/30/EU
Machinery Directive [1]	2014/42/EU
ErP Directive	2009/125/EU
ATEX Directive	2014/34/EU
RoHS Directive [2]	2011/65/EU
Radio Equipment Directive [3]	2014/53/EU
REACH Directive	1907/2006/EC

[1] *Machinery Directive conformance is only required for drives with an integrated safety function.*

[2] *For China RoHS, contact Danfoss application support to get the certificate.*

[3] *Radio Equipment Directive is only required for interfaces supporting wireless communication.*

3.2.2 Low Voltage Directive

The aim of the Low Voltage Directive is to protect persons, domestic animals and property against dangers caused by the electrical equipment, when operating electrical equipment that is installed and maintained correctly, in its intended application. The directive applies to all electrical equipment in the 50–1000 V AC and the 75–1500 V DC voltage ranges.

3.2.3 EMC Directive

The purpose of the EMC (electromagnetic compatibility) Directive is to reduce electromagnetic interference and enhance immunity of electrical equipment and installations. The basic protection requirement of the EMC Directive states that devices that generate electromagnetic interference (EMI), or whose operation could be affected by EMI, must be designed to limit the generation of electromagnetic interference and shall have a suitable degree of immunity to EMI when properly installed, maintained, and used as intended. Electrical equipment devices used alone or as part of a system must bear the CE mark. Systems do not require the CE mark, but must comply with the basic protection requirements of the EMC Directive.

3.2.4 Machinery Directive

The aim of the Machinery Directive is to ensure personal safety and avoid property damage to mechanical equipment used in its intended application. The Machinery Directive applies to a machine consisting of an aggregate of interconnected components or devices of which at least 1 is capable of mechanical movement. Drives with an integrated functional safety function must comply with the Machinery Directive. Drives without a functional safety function do not fall under the Machinery Directive. If a drive is integrated into a machinery system, Danfoss can provide information on safety aspects relating to the drive. When drives are used in machines with at least 1 moving part, the machine manufacturer must provide a declaration stating compliance with all relevant statutes and safety measures.

3.2.5 ErP Directive

The ErP directive is the European Ecodesign Directive for energy-related products. The directive sets ecodesign requirements for energy-related products, including drives, and aims at reducing the energy consumption and environmental impact of products by establishing minimum energy-efficiency standards.

3.2.6 ATEX Directive

Illustration 1: ATEX Logo

3.2.7 Radio Equipment Directive

Devices that emit or receive radio waves as part of radio communication are required to comply with the Radio Equipment Directive. The drive itself does not contain a radio device, and hence compliance to the directive is not relevant. However, user interfaces containing active radio devices, such as the integrated control panel with wireless communication capabilities, comply with the directive.

3.2.8 UL Listing

3.2.9 CSA/cUL

3.2.10 TÜV

TÜV is a European safety organization which certifies the functional safety of the drive in accordance to EN/IEC 61800-5-2. The TÜV both tests products and monitors their production to ensure that companies stay compliant with their regulations.

3.2.11 EAC

Illustration 2: EAC Mark

The EAC logo must be both on the product label and on the packaging label. All products used within the EAC area, must be bought at Danfoss inside the EAC area.

3.2.12 UkrSEPRO

089

Illustration 3: UkrSEPRO Mark

3.2.13 RCM Mark Compliance

Illustration 4: RCM Mark

3.2.14 Marine Type Approvals

VLT® AutomationDrive drives have several marine type approvals. For a list of the approvals and certifications, see the FC 301/FC 302 product page at www.danfoss.com.

3.2.15 Moroccan Conformity Mark

Illustration 5: Morocco CMIM Mark

The drive complies with relevant directives and their related standards for the Morocco market.

3.3 Export Control Regulation

AC drives can be subject to regional and/or national export control regulations. Both the EU and USA have regulations for so-called dual-use products (products for both military and non-military use), which currently includes AC drives with a capacity to operate 600–2000 Hz. These products can still be sold, but it requires a set of measures, for example a license, or an end-user statement.

An ECCN number is used to classify all AC drives that are subject to export control regulations. The ECCN number is provided in the documentation accompanying the AC drive. If the AC drive is re-exported, it is the responsibility of the exporter to ensure compliance with the relevant export control regulations.

For further information, contact Danfoss Drives Global or the local sales office.

3.4 Enclosure Protection Rating

The VLT® drive series are available in various enclosure protection ratings to accommodate the needs of the application. Enclosure protection ratings are provided based on 2 international standards:

- UL type validates that the enclosures meet NEMA (National Electrical Manufacturers Association) standards. The construction and testing requirements for enclosures are provided in NEMA Standards Publication 250-2003 and UL 50, 11th edition.
- IP (Ingress Protection) ratings outlined by the IEC (International Electrotechnical Commission) in the rest of the world. The standard Danfoss VLT® drive series are available in various enclosure protections to meet the requirements of IP00 (Chassis), IP20 (Protected chassis), IP21 (NEMA Type 1), or IP54 (NEMA Type 12). In this manual, NEMA Type is written as Type, for example, IP21/Type 1.

4 VLT® Product Family Overview

4.1 VLT® Drives

Danfoss offers 3 types of AC drives in different-sized enclosures for a wide range of applications, with power ratings from 0.25–1200 kW (0.34–1350 hp).

Standalone drives (frequency converters)

The Danfoss standalone drives are so robust that they can be mounted outside of cabinets virtually anywhere, even right beside the motor. Equipped for the toughest of environment, they suit any application.

More uncompromising features:

- Enclosure sizes with protection ratings up to IP54/UL Type 12.
- Full EMC compliance according to international standards.
- Ruggedized and coated PCBs.
- Wide temperature range, operating from -25 to +40 °C (-13 to 104 °F) without derating.
- Motor cable lengths up to 150 m (492 ft) for shielded cables and 300 m (984 ft) for unshielded cables.

Enclosed drives

Danfoss enclosed drives are designed with the installer and operator in mind to save time on installation, commissioning, and maintenance. The enclosed drives are designed for full access from the front. After opening the cabinet door, all components can be reached without removing the drive, even when mounted side by side. Several cooling options, including back-channel cooling, provide optimum adaption to the installation location and application.

More time-saving features:

- An intuitive user interface with an award-winning local control panel (LCP) and common control platform that streamlines start-up and operating procedures.
- Robust design and advanced controls make Danfoss drives virtually maintenance free.

System modules

The compact design of the system modules makes them easy to fit even in small spaces. Integrated filters, input fuses, options, and accessories provide extra capabilities and protection without increasing the enclosure size.

More space-saving features:

- Built-in DC-link reactors for harmonic suppression eliminate the need for higher loss external AC line reactors.
- Optional built-in RFI filters are available throughout the power range.
- Regen terminals are available within the standard enclosures (for enclosure sizes D, E, and F).
- In addition to the many valuable features that the Danfoss drives offers as standard, there are several other control, monitoring, and power options available in pre-engineered factory configurations.

For more details on the enclosure types, the modularity, and the applications, see the product-specific Selection Guides on www.danfoss.com.

4.2 Product Overview of the VLT® AutomationDrive FC 301/302

The VLT® AutomationDrive FC 301/FC 302 is a drive for controlling

- Asynchronous AC induction motors,
- Permanent magnet synchronous motors,
- AC induction servomotors, and
- Synchronous reluctance motors (SynRM motors).

As other Danfoss AC drives, the VLT® AutomationDrive is motor independent, meaning that the drive can be connected to any brand of motor, thus providing great flexibility when designing an installation.

The FC 301/FC 302 is built on a modular concept design and is equipped with a wide range of features enabling optimal process control and high-quality output. With the many features, the drive meets the requirements of many industrial, chemical, and marine applications, for example:

- Operating pumps.
- Conveyors.
- Material handling equipment.
- Hoists.
- Steering gear.
- Extruders.
- Palletizers.

In typical installations, the drive forms part of a bigger system and can be supplied with extra equipment, for example brakes, kits, and various filters.

Adding to the flexibility are the different ways of connectivity, and as the drive supports all leading industry fieldbusses, it is independent of the fieldbus system being used. The drive can be controlled:

- Directly from the local LCP.
- Local digital I/O or via industrial network connection.
- Wireless via the VLT® Wireless Control Panel LCP 103. The LCP 103 connects to the MyDrive® Connect app and enables control from a mobile device.

Easy installation and commissioning

The FC 301/FC 302 comes with pluggable and spring-loaded I/O terminals making wiring and installation easy. During commissioning, the FC 301/FC 302 offers time-saving application-dependent functions, such as:

- Droop for load sharing.
- Integrated brake control for safe operation of hoists.
- Integrated process controller for demand-based pumping.
- Power limit function for limiting the motor power distributed to the motor when required.

Commissioning can be made effectively via the VLT® Motion Control Tool MCT 10, which is a PC tool designed especially for drive commissioning. The tool contains many features, and it is also possible to create Smart Assisted Start-up wizards, define initial parameter values, and much more.

To ensure optimal control of the motor, the VLT® AutomationDrive offers a built-in algorithm, automatic motor adaptation (AMA). At commissioning, program the function via the parameters to fine-tune the drive to match the motor.

Power sizes, voltage ranges, and enclosure protection classes

The VLT® AutomationDrive FC 301/FC 302 is available in many power sizes, voltage ranges, and enclosure protection classes, which makes it easy to find the perfect drive for a given application.

Table 3: Voltage Ranges and Power Ranges

Voltage ranges [V]	Power ranges [kW (hp)]
3 x 200–240	0.25–37 (0.34–50)
3 x 380–480/500	0.37–800 (0.5–1075)
3 x 525–600	0.75–75 (1.0–100)
3 x 525–690	1.1–1200 (1.5–1600)

Enclosure protection ratings:

- IP20/Chassis
- IP21/Type 1
- IP54/Type 12
- IP55/Type 12
- IP66/Type 4X

Table 4: Enclosures A1–A5: Power Sizes, Voltage Ranges, and Protection Rating

Enclosure		A1	A2	A3	A4	A5
Power [kW]	200–240 V	0.25–1.5	0.25–2.2	3–3.7	0.25–2.2	0.25–3.7
	380–480/500 V	0.37–1.5	0.37–4	5.5–7.5	0.37–4	0.37–7.5
	525–600 V	–	–	0.75–7.5	–	0.75–7.5
	525–690 V	–	–	1.1–7.5	–	–
		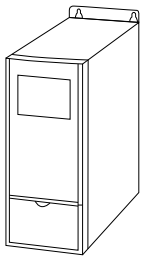 e30ba870.11	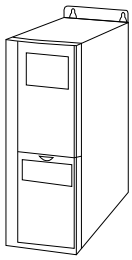 e30ba809.11	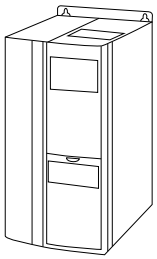 e30ba810.11	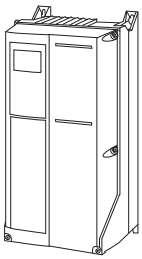 e30bb458.11	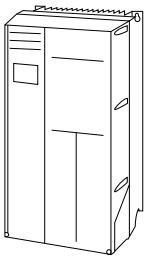 e30ba811.11
IP		20	20/21	20/21	55/66	55/66
NEMA		Chassis	Chassis/Type 1	Chassis/Type 1	Type 12/4X	Type 12/4X

Table 5: Enclosures B1–B4: Power Sizes, Voltage Ranges, and Protection Rating

Enclosure		B1	B2	B3	B4
Power [kW]	200–240 V	5.5–7.5	11	5.5–7.5	11–15
	380–480/500 V	11–15	18.5–22	11–15	18.5–30
	525–600 V	11–15	18.5–22	11–15	18.5–30
	525–690 V	–	11–22	–	11–30

Enclosure	B1	B2	B3	B4
	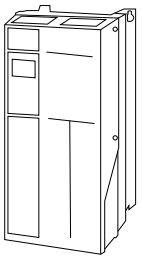 e30ba812.11	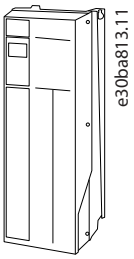 e30ba813.11	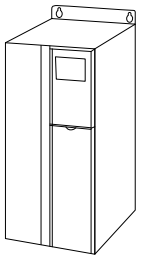 e30ba826.11	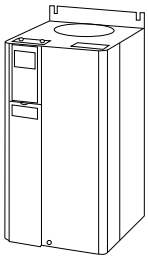 e30ba827.11
IP	21/55/66	21/55/66	20	55
NEMA	Type 1/12/4X	Type 1/12/4X	Chassis	Chassis

Table 6: Enclosures C1–C4/D3h: Power Sizes, Voltage Ranges, and Protection Rating

Enclosure		C1	C2	C3	C4	D3h [1]
Power [kW]	200–240 V	5.5–7.5	11	5.5–7.5	11–15	–
	380–480/500 V	11–15	18.5–22	11–15	18.5–30	–
	525–600 V	11–15	18.5–22	11–15	18.5–30	–
	525–690 V	–	11–22	–	11–30	55–75
		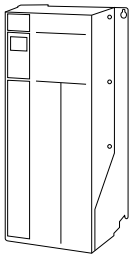 e30ba814.11	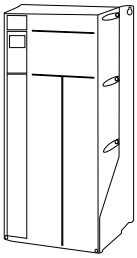 e30ba815.11	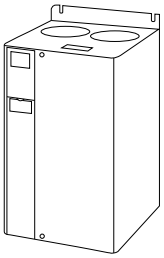 e30ba828.11	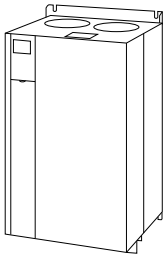 e30ba829.11	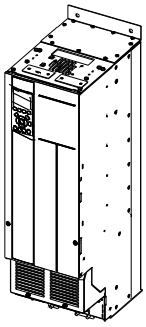 e30bu371.10
IP		21/55/66	21/55/66	20	55	20
NEMA		Type 1/12/4X	Type 1/12/4X	Chassis	Chassis	Chassis

[1] *Details, see separate design guide VLT® AutomationDrive FC 302 90–710 kW*

Standalone drives and enclosed drives

Based on the selected protection rating, select either a standalone drive or an enclosed drive.

The standalone drives have a protection rating of at least IP21/Type 1. These drives can be mounted both outside and inside in dusty and damp environments without any further protection.

The enclosed drives have a protection rating of IP20/Chassis and must be built into cabinets for protection against dust and moisture. The enclosed drives are not suitable for outdoor installation.

Both standalone drives and enclosed drives come in different enclosure sizes depending on the selected power size, voltage range, and enclosure protection rating.

For low-power applications (0.25–75 kW), select between enclosure sizes A, B, C, and D3h.

For high-power applications (90–1200 kW), select between enclosure sizes Dxh, Exh, and F.

For more information about available enclosure sizes, refer to 8.1 Enclosure Size by Power Rating.

Functionalities

The VLT® AutomationDrive offers various customizable functionalities such as:

- Power hardware with varying voltage ratings, current ratings, protection ratings, and EMC performance ratings.
- Control hardware with various control cards with, for example, Integrated Motion Controller for high-precision positioning and synchronization applications.
- Added functional extensions for extending the functionalities of the drive, for example, easy PLC integration.
- License packages, including condition-based monitoring and other extra software functionalities.

Safety functions

As standard, the drive is delivered with the Safe Torque Off (STO) function, which protects both operators and equipment if a failure occurs. Furthermore, the built-in STO function is cost-saving as it makes separate safety modules unnecessary. Furthermore, 6 different safety options are available:

- VLT® Safety PLC Interface MCB 108
- VLT® PTC Thermistor Card MCB 112 (for example, for ATEX applications).
- VLT® Safety Option MCB 150.
- VLT® Safety Option MCB 151.
- VLT® Safety Option MCB 152.
- VLT® Sensorless Safety MCB 159.

Troubleshooting and Maintenance

Troubleshooting and maintenance of the VLT® AutomationDrive FC 301/FC 302 are made easier and more precise with the increased digitalization.

The sensors in the FC 301/FC 302 record and store real-time information about warnings and alarms. By adding the VLT® Real-time Clock MCB 117 option, it is even possible to have the stored events time and date stamped.

Regarding maintenance, the FC 301/FC 302 features functions for preventive maintenance and condition-based monitoring.

The preventive maintenance functions are programmed in the drive and can be used to schedule maintenance alerts based on running time of the drive.

Using the condition-based monitoring functions turns the drive into a sensor that continuously monitors the condition of the motor and application. Using the DrivePro® services with the drive, the collected data can be shared with maintenance personnel and other service providers.

4.3 Power Drive Systems

4.3.1 Ecodesign for Power Drive Systems

The Ecodesign Directive is the legislative framework that sets requirements on all energy-related products in the domestic, commercial, and industrial sectors throughout Europe.

The Ecodesign requirements are only mandatory within the European Union. These requirements are like the legislative requirements for energy-related products which apply in North America and Australia.

Terms like Complete Drive Module (CDM) and Power Drive Systems (PDS) are used to define the elements in the design. The objective is to make more efficient and fewer energy consuming designs.

The CDM contains the drive controller as well as auxiliary devices and input components.

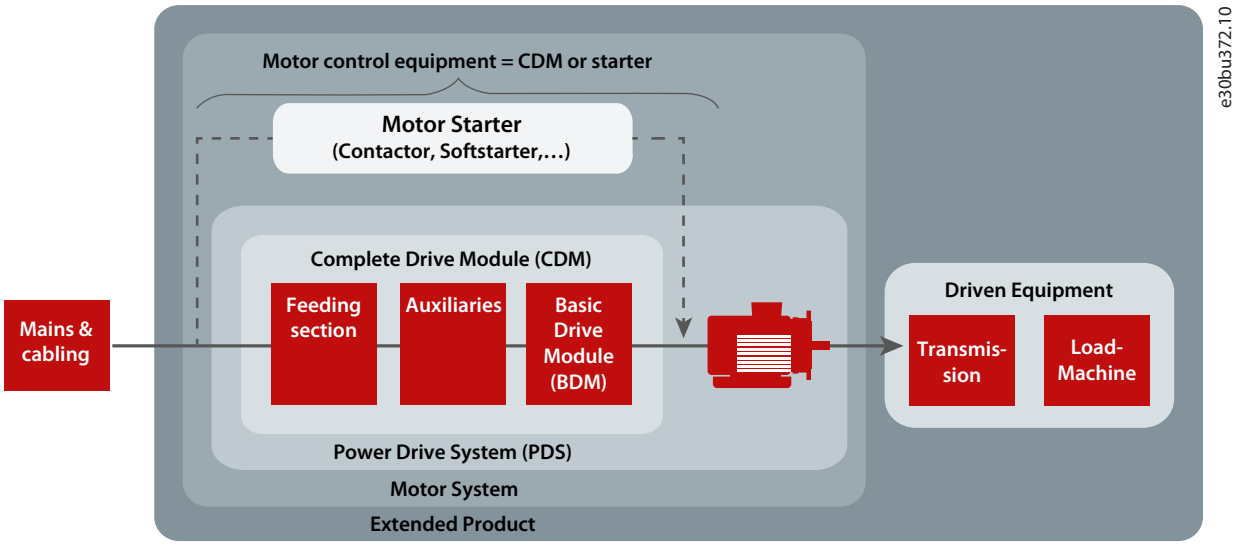

Illustration 6: Drive System Design

The efficiency classes IE0 to IE2 of the drive controller as specified in IEC 61800-9-2 (EN 50598-2) refer to the 90/100 operating point, i.e. 90 % motor stator frequency and 100% torque current (see illustration 7).

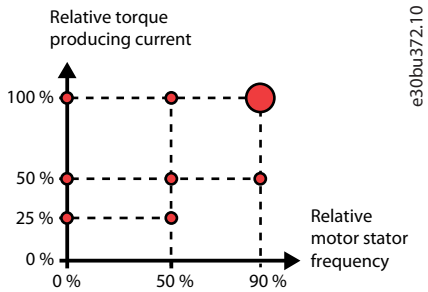

Illustration 7: Operating Point according to IEC 61800-9-2 (EN 50598)

Since in the future all component manufacturers will disclose their loss data according to this new standard, optimized applications can be designed with a wide range of different components. The new Standard allows an accurate preliminary calculation of the power losses, so that the ROI (Return of Investment) can be reliably determined. Up to now the overall efficiency of speed-regulated electric motors was estimated with the aid of approximate energy consumption calculations.

It is now possible to determine the total losses of a system for the 8 operating points defined in the standard, including the part load operation, via a simple addition of power losses. Danfoss helps its customers to avoid having to rely on system solution providers, to ensure that their systems will retain a competitive advantage also in the future.

EC 61800-9-2 (EN 50598-2) shifts the focus from the individual component to the efficiency of the whole drive system. The new efficiency classes (International Efficiency for Systems, IES)

allow a simple determination of the total losses for a whole drive system (PDS).

Danfoss offers the MyDrive® ecoSmart™ tool, which is available online or as a Smartphone app to assist with the efficiency calculation. Use MyDrive® ecoSmart™ to:

- Look up part load data as defined in IEC 61800-9-2, for VLT® and VACON® drives
- Calculate efficiency class and part load efficiency for drives and power drive systems
- Create a report documenting part load loss data and IE or IES efficiency class.

For more information, refer to http://ecosmart.danfoss.com.

illustration 8 shows the components in the PDS which contribute to losses in the design. Mains cables and the load machine are not a part of the PDS, even though their losses can be significant and could be a part of the evaluation of the overall energy efficiency of the installation.

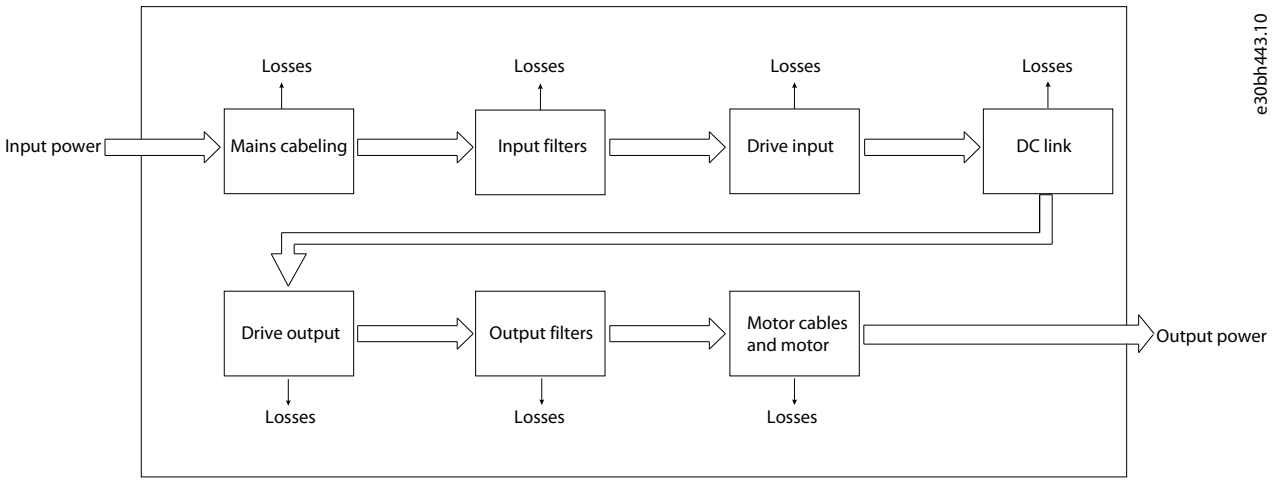

Illustration 8: Losses in a Power Drive System

4.3.1.1 Losses in Mains Cabling

The cabling from the supply must be considered, as the selection of suitable cables is often a problem, especially when dedicated feeding transformers are installed. From the impedance of the cables, the energy losses are created in the ohmic part. Calculate the active power losses for a 3-phase system with a star point groundingas follows:

$P_{L,mains} = 3 \times R \times I_{L1}^2$

Because the load, when using drives and motors, also include reactive power and harmonic currents, these parameters also contribute to losses. The ratio between active and apparent power is normally called the power factor. Having a PDS with a power factor close to 1 result in the lowest losses in the mains. Using filters on the input side of the drive can lower the power factor.

4.3.1.2 Input Filters: Line Reactors and Harmonic Filters

Line reactor

A line reactor is an inductor which is wired in series between a power source and a load. Line reactors, also called input AC reactors, are typically used in motor drive applications.

The main function of the line reactor lies into its current limiting characteristics. Line reactors also reduce the main harmonics, limit the inrush currents, and protect drives and motors. An overall improvement of the true power factor and the quality of the input current waveform can be achieved.

When to use line reactors

It is important to consider the installation environment for the drives. In some situations, distortion from the grid can damage the drive and precautions must be taken.

A simple menas of prevention is to ensure a minimum of impedance in front of the drive.

- The installation site has switched power factor correction capacitors.
- The installation site has lightening strikes or voltage spikes.
- The installation site has power interruptions or voltage dips.

Danfoss offers the line reactor program VLT® Line Reactor MCC 103, see Danfoss.com.

Harmonic filters

The purpose of using harmonic filters is to reduce the distortion on the mains. The distortion is generated by the drives when switching the voltage to generate a frequency on the output. The harmonics should be limited both seen from energy consumption perspective and disturbance of other users in the grid.

There are 2 categories of harmonic solutions:

- Passive.
- Active.

Passive solutions consist of capacitors, inductors, or a combination of both in different arrangements. The simplest solution is to add inductors/reactors of typically 3–5% in front of the drive. This added inductance reduces the number of harmonic currents produced by the drive. More advanced passive solutions combine capacitors and inductors in trap arrangement specially tuned to eliminate harmonics starting from, for example, the 5th harmonic.

For more details on the Danfoss passive solutions, refer to VLT® Advanced Harmonic Filters AHF 005/AHF 010 Design Guide.

The active solutions determine the exact current that cancels the harmonics present in the circuit and synthesizes and injects that current into the system. Thus, the active solution mitigates the real-time harmonic disturbances, which makes these solutions effective at any load profile.

For more details on the Danfoss active solutions, refer to VLT® Low Harmonic Drive Operating Instructions, and VLT® Advanced Active Filter AAF 006 Operating Instructions.

4.3.1.3 Drive, Input Side

RFI (radio frequency interference)

Drives generate radio frequency interference (RFI) due to their variable-width current pulses. Drives and motor cables radiate these components and conduct them into the mains system.

RFI filters are used to reduce this interference on the mains according to IEC 61800-3 in order not to disturb radio services. Maximum allowed emission depends on the environment where the PDS is used.

The need for reducing the interferences and the losses created by the coils is a trade-off that is hard to influence in the use of drives. Even though the losses exist, it is important to fulfill the legislation demands for the installation environment.

RFI filter on IT grid

If the drive is supplied from an isolated mains source (IT mains, floating delta) or TT/TN-S mains with grounded leg (grounded delta), the RFI filter must be turned off.

In the OFF position, the internal capacitors between the chassis (ground), the input RFI filter, and the DC link are cut off. As the RFI switch is turned off, the drive is not able to meet optimum EMC performance.

By opening the RFI filter switch, the ground leakage currents are also reduced, but not the high-frequency leakage currents caused by the switching frequency of the drive. It is important to use isolation monitors that are designed for use with power electronics (IEC 61557-8). For example, Deif type SIMQ, Bender type IRDH 275/375, or similar.

The Danfoss VLT® drives can be ordered with different types of RFI filters. See more details on RFI, the use of RFI filters, and EMC compliance in 10.16 Electromagnetic Compatibility (EMC) Overview.

Passive diode rectifier input

The use of diode rectifiers on the input side of the drives are the most cost-effective design. The energy flow goes from the mains to the load and have low losses. On the other hand, diodes create harmonics in the mains when rectifying and thereby create losses. These harmonics can be reduced by having DC-link coils, which are used in the Danfoss VLT® drives.

An energy flow from the drive back to the grid is not possible with this design as the energy is generated back from the application to the DC link. Use a DC chopper and a connected resistor to absorb the energy. This reduces the energy efficiency significantly. If more drives are installed, an improvement can be gained via load sharing by connecting the DC links, see 10.3.4 Load Sharing Connection. For information about the use of brake resistors for drives ordered with built-in brake choppers, refer to 10.10.1 Selection of Brake Resistor and 10.10.2 Control with Brake Function.

Active front end

In contrast to the diode rectifier, the active front end can generate excessive energy from the DC link back to the mains. In regenerative applications, this design provides a significant improvement of the energy efficiency. This technology also has advantages in relation to harmonics compensation and a more stable DC-link voltage. The design has similar functions on the input as on the output, controlling IGBTs. There are also losses generated by switching of the IGBTs, which influence the energy efficiency. Due to the extra IGBTs, this solution can be more expensive and is not used as often as the passive diode rectifier.

4.3.1.4 DC Link

The DC link is a power storage facility for the output section of the drive. There are 2 major components to the DC-link section:

- Capacitors
- Coils

In illustration 9 only 1 capacitor is shown, but it is always a series of capacitors.

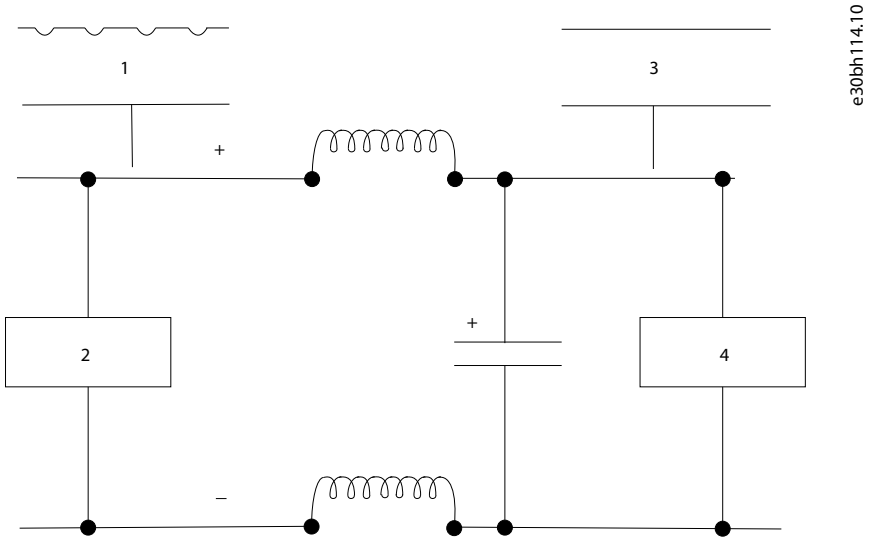

1	Direct current (AC ripple)	**2**	Rectifier
3	Direct current	**4**	Inverter

Illustration 9: Wiring Diagram of the DC Link

With Danfoss VLT® drives, this intermediate section always uses DC coils, also known as DC line reactors or DC chokes. For cost considerations, most other drive manufacturers do not offer these DC line reactors as standard equipment. Danfoss regards these coils as essential for 2 main reasons:

- The ability to reduce harmonic noise (interference) by 40%.
- The ability to ride through a temporary loss of power. This allows the drive to avoid numerous unplanned shutdowns.

4.3.1.5 Drive, Output Side

The output side of the drive contains IGBTs used for generating a variable AC voltage with variable frequency. If no filters are used, overvoltage spikes, due to reflection of the voltage waveform, can be measured on the motor connection. This situation is often linked with long motor cables used in the installation and can reach values up to twice the level of the DC-link voltage.

From a user perspective, losses on the output side of the drive can be influenced by using a lower switching frequency, but this also contributes to higher losses in the motor and filters installed. To optimize energy efficiency, a compromise must be found when selecting the components used, for example, filters, motor type, and others. Often, output filters are used with the purpose of reducing stress on the insulation.

In the following sections, the aspect of different filter types is discussed in perspective of energy efficiency versus function.

Common-mode filters

Common-mode HF filters are placed between the drive and the motor. They are nanocrystaline cores that mitigate high-frequency noise in the motor cable (shielded or unshielded) and eliminate bearing currents, and hence Electro Discharge Machining (EDM) or bearing etching in the motor. Bearing currents caused by drives are also referred to as common-mode currents.

Since the common-mode filters mitigate high frequency, these filters absorb energy and contribute also to losses. Here, the trade-off is the advantage described compared with the losses.

More information on VLT® Common Mode Filters MCC 105 can be found on www.Danfoss.com.

dU/dt filters

At the IGBTs on the output switch, the voltage is not a clean sinus curve. It contains fast changes in voltage levels over a very short time. The use of dU/dt filters increases the raise time of the motor voltage to reduce the stress on the motor insulation. If not avoided, the problem will typically not show at once, but after some time, the insulation breaks and creates problems.

The switching frequency influences the losses in the dU/dt filters. These losses can be up to 1% of the rated power. Here, the trade-off is the possible damage of the motor over time compared with the cost of energy losses.

Danfoss offers the VLT® dU/dt Filter MCC 102 as a possible solution. Find more information on www.Danfoss.com.

Sine-wave filters

A more advanced, but also more costly solution, is using sine-wave filters.

The VLT® Sine-Wave Filter MCC 101 is a differential-mode low-pass filter that suppresses the switching frequency component coming from the drive and smoothes out the phase-to-phase voltage of the drive to become sinusoidal. This reduces the motor insulation stress and bearing currents. By supplying the motor with a sinusoidal voltage waveform, the switching acoustic noise from the motor is also eliminated.

For more detailed information, see the VLT® Sine-Wave Filter MCC 101 factsheet.

However, this type of filter also produces a voltage drop and there may be a reduction in the available control bandwidth. This can sometimes make it impossible to use this filter type. Again, as for the dU/dt filter, losses are linked to the switching frequency.

For more detailed information, see the VLT® Output Filters Design Guide.

4.3.1.6 Motor Cables and Motor

Motor cables

Motor cables introduce mainly ohmic losses: the longer the cables, the more resistance. In general, when correctly selected, the losses in cables shorter than 25 m (82 ft) can be neglected. In single-wire cables with individual shielding, current causes losses in the cable shielding. These losses can be neglected when using 3-wire cables.

Motor

There are many different types of motors that can be operated with a drive. The solution for dealing with losses in motors is therefore depending on the individual motor type and installation. In standard IEC 61800-9-2:2017 annex D, a discussion on motor load and losses is found.

A method to evaluate the losses generated in the motor operated with a drive can be found in the standards IEC 60034-2-1 and IEC TS 60034-2-4.

For the drive dealt with in this manual, find more information on supported motor types in 5.1.2 Supported Motor Types.

5 Product Overview

5.1 Overview of Drives Systems

Danfoss offers drives in different enclosure types for a wide range of applications.

Standalone AC drives

The Danfoss standalone AC drives are so robust that they can be mounted outside of cabinets virtually anywhere, even right beside the motor. Equipped for the toughest of environment, they suit any application.

More uncompromising features:

- Enclosure sizes with protection ratings up to IP66/UL Type 4X.
- Full EMC compliance according to international standards.
- Ruggedized and coated PCBs.
- Wide temperature range, operating from -25 °C to +50 °C (-13 °F to 122 °F) without derating.
- Motor cable lengths up to 150 m (492 ft) shielded / 300 m (984 ft) unshielded as standard with uncompromised performance.

Enclosed drives

Danfoss drives are designed with the installer and operator in mind to save time on installation, commissioning, and maintenance.

VLT® enclosed drives are designed for full access from the front. After opening the cabinet door, all components can be reached without removing the drive, even when mounted side by side.

Several cooling options, including back-channel cooling, provide optimum adaption to the installation location and application.

More time-saving features:

- An intuitive user interface with an award-winning local control panel (LCP) and common control platform that streamlines start-up and operating procedures.
- Robust design and advanced controls make Danfoss drives virtually maintenance-free.

Modules

The compact design of the VLT® high-power drive modules makes them easy to fit even in small spaces. Integrated filters, options, and accessories provide extra capabilities and protection without increasing the enclosure size.

More space-saving features:

- Built-in DC-link reactors for harmonic suppression eliminate the need for higher loss external AC line reactors.
- Optional built-in RFI filters are available throughout the power range.
- Optional input fuses and load share terminals are available within the standard enclosures.
- In addition to the many valuable features that the Danfoss drives offer as standard, there are several other control, monitoring, and power options available in pre-engineered factory configurations.

For more details on the enclosure types, the modularity, and the applications, see the product-specific selection guides on www.danfoss.com.

5.1.1 Filter Options

Filters are often extra components that must be planned for when designing the power drive system. It is important to understand why and when to use output filters with Danfoss drives.

For more details on output filters, refer to Output Filters Design Guide.

5.1.1.1 Protection of Motor Insulation

The output voltage of the drive is a series of trapezoidal pulses with a variable width (pulse width modulation) characterized by a pulse rise time, t_r. When a transistor in the inverter switches, the voltage across the motor terminal increases by a dU/dt ration depending on:

- The motor cable (type, cross-section, length, shielded or unshielded, inductance, and capacitance).
- The high-frequency surge impedance of the motor.

Because of the impedance mismatch between the cable characteristic impedance and the motor surge impedance, a wave reflection occurs, causing a ringing voltage overshoot at the motor terminals

5.1.1.2 Reduction of Motor Acoustic Noise

There are 3 main sources for generation of acoustic noise in the motor:

- The magnetic noise produced by the motor core through magnetostriction.
- The noise produced by motor bearings.
- The noise produced by motor ventilation.

When a motor is fed by a drive, the pulse-width-modulated (PWM) voltage applied to the motor causes extra magnetic noise at the switching frequency and harmonics of the switching frequency (mainly the double of the switching frequency). In some applications, this is not acceptable. To eliminate this additional switching noise, use a sine-wave filter. This filter filters the pulse-shaped voltage from the drive and provides a sinusoidal phase-to-phase voltage at the motor terminals.

5.1.1.3 Reduction of High-frequency Electromagnetic Noise in Motor Cables

Using filters reduces noise generated in the motor cables.

When no filters are used, the ringing voltage overshoot that occurs at the motor terminals is the main high-frequency noise source. The noise can be explained by the correlation between the frequency of the voltage ringing at the motor terminals and the spectrum of the high-frequency conducted interference in the motor cable. Besides this noise component, there are also other noise components such as:

- The common-mode voltage between phases and ground at the switching frequency and its harmonics - high amplitude but low frequency.
- High-frequency noise (above 10 MHz) caused by the switching of semiconductors - high frequency but low amplitude.

Installing an output filter gives the following advantages:

- dU/dt filters reduce the frequency of the ringing oscillation to a level below 150 kHz.
- Sine-wave filters eliminate the ringing oscillation and the motor receives a sinusoidal phase-to-phase voltage.

5.1.1.4 Bearing Currents and Shaft Voltage

Fast switching transistors in the drive combined with an inherent common-mode voltage (voltage between phases and ground) generate high-frequency bearing currents and shaft voltages. While bearing currents and shaft voltages can also occur in direct-on-line motors, these phenomena are accentuated when the motor is fed from a drive.

Most bearing damage in motors fed by drives is caused by vibrations, misalignment, excessive axial or radial loading, improper lubrication, and impurities in the grease. Sometimes, bearing damage is caused by bearing currents and shaft voltages. The mechanism that causes bearing currents and shaft voltages is complicated to explain, but it is important to know that it exists. Two main mechanisms can be identified:

- Capacitive coupling: The voltage across the bearing is generated by parasitic capacitances in the motor.
- Inductive coupling: Caused by circulating currents in the motor.

The grease film of a running bearing behaves like isolation. The voltage across the bearing can cause a breakdown of the grease film and produce a small electric discharge (a spark) between the bearing balls and the running track. This discharge produces a microscopic melting of the bearing ball and running track metal and over time it causes the premature wear-out of the bearing. This mechanism is called electrical discharge machining (EDM).

5.1.2 Supported Motor Types

Today, the drive-controlled, 3-phase motor is a standard element in all automated applications. High-efficiency induction motors, but also motor designs such as permanent magnet motors, EC motors, and synchronous reluctance motors, need regulation with AC drives. Many motors cannot be operated directly from the 3-phase standard power supply.

The Danfoss VLT® drives can control multiple motor technologies. The most advanced is the VLT® AutomationDrive FC 302. This drive is compatible with virtually all types of common AC motor technologies on the market:

- Induction motors (IM).
- Surface permanent magnet motors (SPM).
- Interior permanent magnet motors (IPM).
- Synchronous reluctance motors (SynRM).
- Permanent magnet assisted synchronous reluctance motors (PMaSynRM).

Induction motors, synchronous motors, and induction servo motors are all supported as standard without the need for extra software. The FC 302 can control the motors in either open loop or closed loop through its high precision motor control platform, VVC$^+$ or flux control.

Standard IEC line motors (IEC 60034-30-1)

The standard IEC 60034-30-1 of March 2014 replaces the standard 60034-30:2008, which has defined 3 efficiency levels for 3-phase induction motors. The updated standard IEC 60034-30-1 now includes the 4th efficiency level, IE4. Furthermore, 8-pole motors and an extended power range are now included in the standard.

Efficiency classes:

In the IEC 60034-30-1, the following efficiency classes are defined for induction motors:

- IE1 (Standard efficiency).
- IE2 (High efficiency).
- IE3 (Premium efficiency).
- IE4 (Super premium efficiency).

IE = Internation efficiency.

These motor types can all be operated with Danfoss VLT® drives.

More information on this topic can be found in the publication Motor Technologies for Higher Efficiency in Applications. This document can be downloaded from www.danfoss.com.

5.1.3 Bearing Currents

Protecting the motor insulation and bearings

The drive employs modern IGBT inverter technology. Regardless of the frequency, the drive output comprises pulses of approximately the drive DC bus voltage with a very short rise time. The pulse voltage can almost double at the motor terminals, depending on the attenuation and reflection properties of the motor cable and the terminals. This can cause extra stress on the motor and motor cable insulation. Modern AC drives with their fast-rising voltage pulses and high-switching frequencies can generate current pulses that flow through the motor bearings. Gradually, these current pulses can erode the bearing races and rolling elements. Optional dU/dt filters protect the motor insulation system and reduce bearing currents. Optional common-mode filters mainly reduce bearing currents. Insulated N-end (non-drive end) bearings protect the motor bearings.

Practical tips

Usually, the shielding surface of the motor cable is connected to the frame of the terminal box and not to the motor stator frame. However, the motor terminal box on some motors can be mounted to the stator housing with a considerable change of the high-frequency currents and impedance. Typically, there is a gasket between the terminal box and the stator frame, and the box is attached to the motor frame with 4 small screws. Conducted measurements on these motors showed that screws did not provide a low impedance from the terminal box to the stator and therefore, the common-mode currents were oscillated with a noticeable magnitude.

Applying high-frequency bonding straps between the motor terminal box and the stator frame helps providing low impedance for high-frequency currents and therefore eliminating the common-mode current oscillations in the installation.

Illustration 10: Installation of EMC straps from the Terminal Box to the Motor Frame

Sometimes, so called NYCWY cables are used to connect the motor to the drive inverter. The symmetry of the PE conductor in these cables is achieved by a conductor surrounding all the phase leads. These cables, however, prevent common-mode currents at the fundamental frequency only.

To avoid common-mode currents at fundamental and high frequencies at the same time, use multicore symmetric motor cables with 3 ground conductors with a shield.

Applying common-mode cores

Common-mode cores across motor cable conductors effectively reduce high-frequency motor bearing currents. On motors with a power rating of approximately 100 kW and onwards, the result of reduction of bearing currents is most evident.

High-frequency common-mode cores may have an oval or round shape and they are easy-to-install components.

Install common-mode cores in a way that only unshielded power cores of the motor cable are wired through the core. The PE and shielding wires must be placed outside of the core. It is also important that all 3 motor phase wires are wired through the same core. Otherwise, the cores do not provide the required functionality.

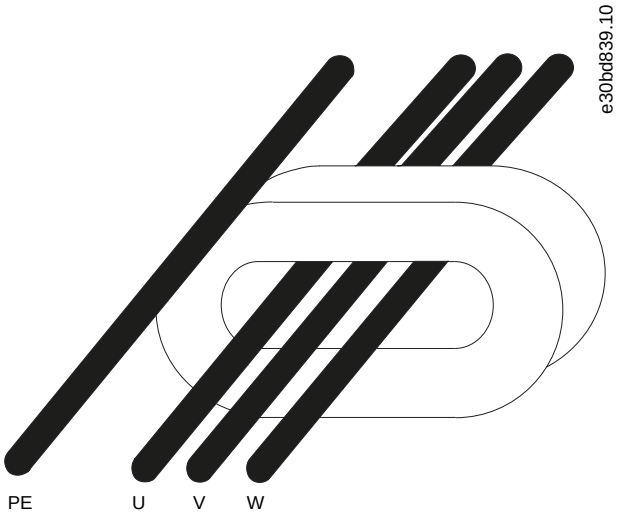

Illustration 11: Installing Common-mode Cores

Depending on the power rating of the drive installation and the quantity of motor cables connected in parallel, several same-size common-mode cores might be used. In dedicated product manuals, preselection tables advise on the required minimal quantity of single common-mode cores to install. The number of cores depend on the power rating, the nominal voltage of the drive installation, and the length of the applied motor cables.

Applying common-mode cores on motor cables connected in parallel

If many motor cables connected in parallel are used and the power wires of all cables cannot be fitted through the common-mode cores, place the required number of cores on each individual motor cable. This ensures the saturation of the core due to likely unequal current sharing between cables. Wire all 3-phase conductors of each cable through 1 set of cores.

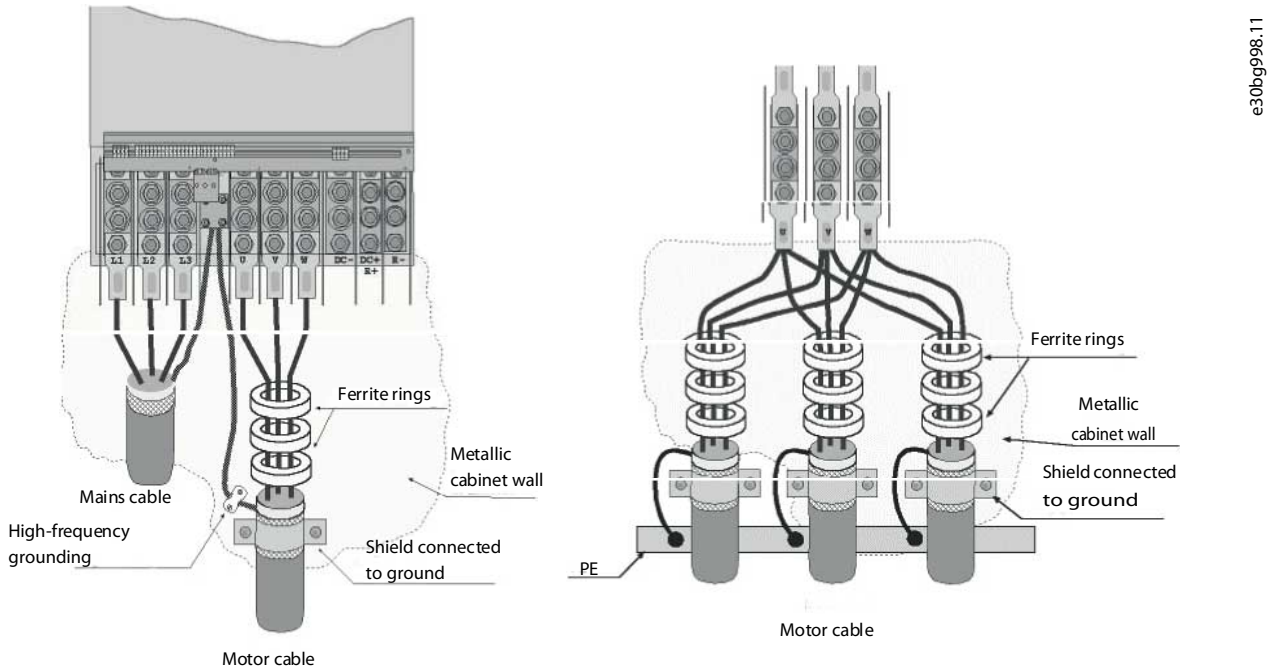

Illustration 12: Installation of CM Cores on Cables Connected in Parallel

As losses of common-mode cores are low, the expected temperature of the core is below 60 °C (140 °F) under normal circumstances. Thus common-mode cores can also be accommodated inside the motor terminal box. If cores cannot be fitted inside the drive housing or the motor terminal box, they can be placed in an external cabinet close to the motor.

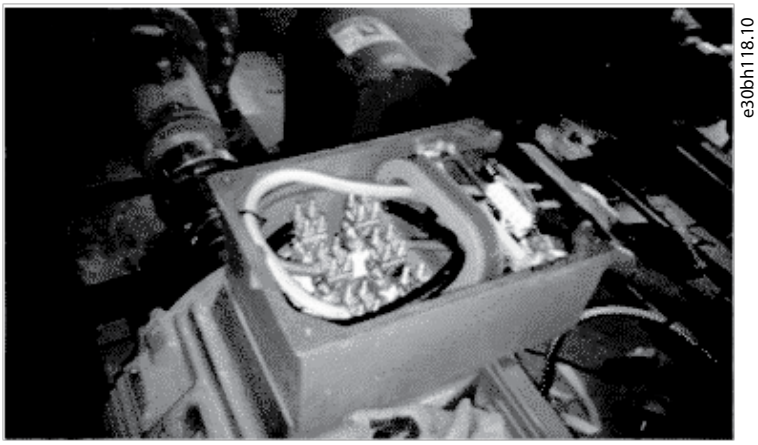

Illustration 13: Mounting of CM Cores Inside the Motor Terminal Box

To ensure minimal bearing currents in the motor, Danfoss recommends ordering the drive with output motor filters as a power option.

5.2 Integrated Motion Controller

NOTICE

The integrated motion control is only available with special IMC software version 48.XX. To order the drive with the IMC software, use the type code with software release version S067.

The integrated motion controller (IMC) enables position control with all motor control principles and motor types with and without feedback.

To activate the IMC functionality, select *[9] Positioning* or *[10] Synchronization* in *parameter 1-00 Configuration Mode*. IMC enables the following functions:

- Positioning: Absolute, relative, and touch probe.
- Homing.
- Position synchronization.
- Virtual master.

Position control in both positioning and synchronization modes can be either sensorless or with feedback. In the sensorless control principle, the motor angle calculated by the motor controller is used as feedback. In the closed-loop control principle, VLT® AutomationDrive FC 302 supports most standard incremental encoders, absolute encoders, and resolvers. The position controller can handle both linear and rotary systems. The controller can scale positions to any relevant physical unit such as mm or degrees.

5.2.1 Positioning, Homing, and Synchronization

5.2.1.1 Positioning

The drive supports relative positioning and absolute positioning. A positioning command requires 3 inputs:

- Target position.
- Speed reference.
- Ramp times.

The 3 inputs can come from various sources, see illustration 14.

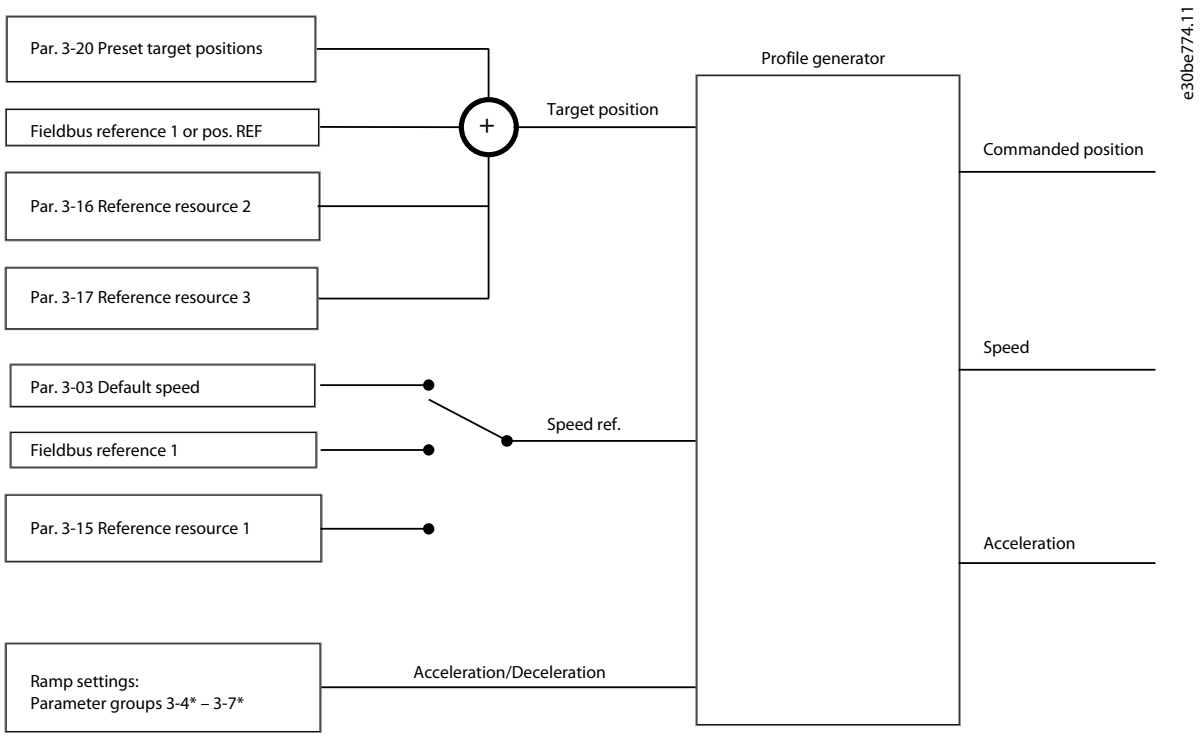

Illustration 14: Positioning References

In each control cycle (1 ms), the profile generator calculates position, speed, and acceleration required to do the specified movement. The outputs from the profile generator are used for the position and speed controller.

5.2.1.2 Homing

Homing is required for creating a reference to the physical machine position in closed-loop control principle with incremental encoder or in sensorless control principle. IMC supports various homing functions with or without a homing sensor. Select the homing function in *parameter 17-80 Homing Function*. After selecting a homing function, complete homing before executing absolute positioning.

5.2.1.3 Synchronization

In synchronization mode, the drive follows the position of a master signal. The master signal and the offset between the master and the slave are handled as shown in illustration 15.

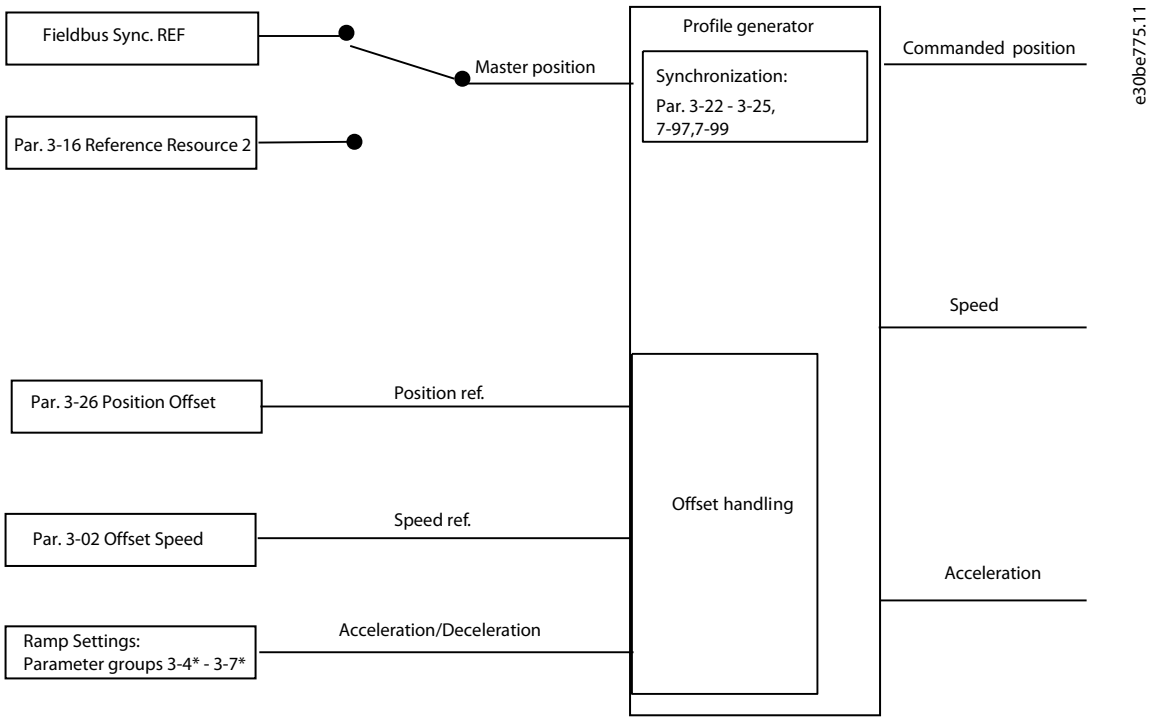

Illustration 15: Synchronization References

In each control cycle (1 ms), the profile generator calculates position, speed, and acceleration required to do the specified movement. The outputs from the profile generator are used as inputs for the position and speed controller.

5.2.1.4 Fieldbus References

Fieldbus references for speed and position are set via the process data (PCD) configuration as shown in the example:

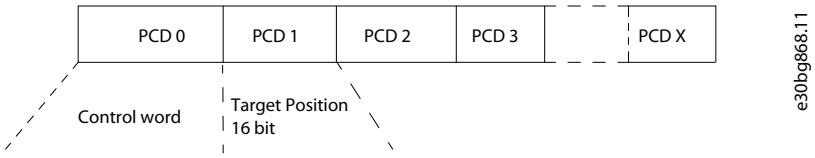

Illustration 16: Positioning: Default settings (PCD 1 = Fieldbus REF 1)

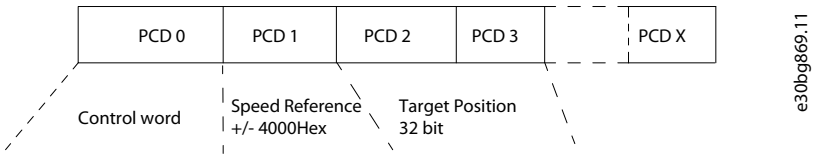

Illustration 17: Positioning: PCD write configuration PCD 1 = Fieldbus REF 1, PCD 2 and 3 = Fieldbus Pos REF

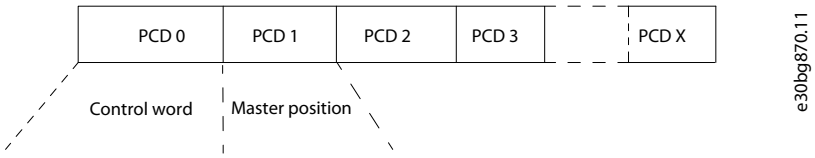

Illustration 18: Synchronizing: PCD write configuration PCD 1 = Fieldbus Sync REF

5.2.2 Control

5.2.2.1 Control Loops

In positioning and synchronization mode, 2 extra control loops control the motor in addition to the motor controller running flux control principle, sensorless, or with motor feedback. The position PI controller is the outer loop providing the setpoint for the speed PID, which provides the reference for the motor controller. For a closed loop, feedback source can be selected individually for each of 3 controllers.

For sensorless control principle, select *[0] Motor feedb. P1-02* in the following parameters:

- Speed PID: *Parameter 7-00 Speed PID Feedback Source*.
- Position PI: *Parameter 7-90 Position PI Feedback Source*.

With this set-up, both controllers use the motor angle calculated by the motor controller. See illustration 19 for control structure and parameters affecting the control behavior.

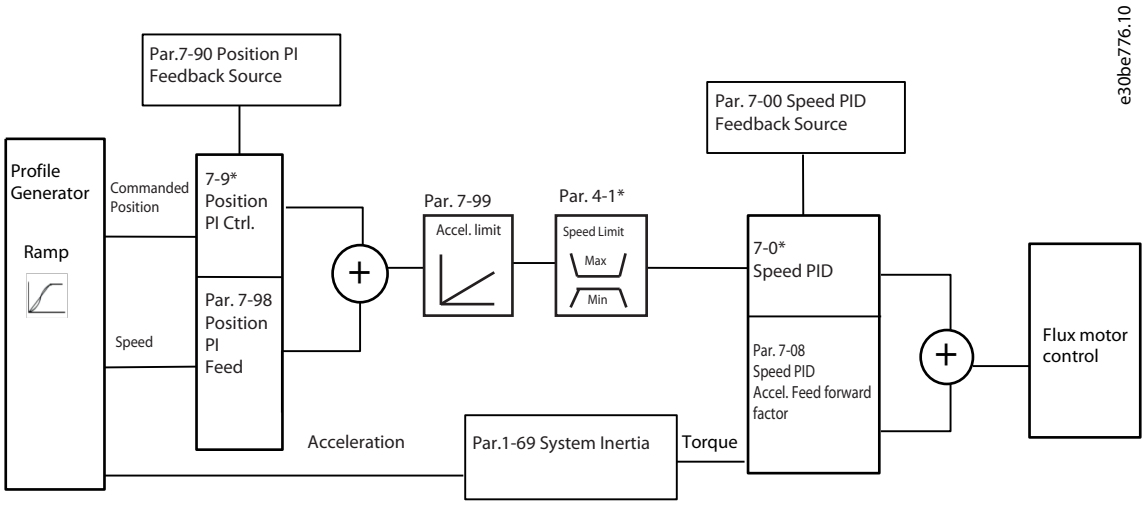

Illustration 19: Positioning and Synchronization Mode

5.2.2.2 Control and Status Signals

IMC control and status signals are available I/O bits and fieldbus bits.

Table 7: Control and Status Signals

Name	Function	Digital input (1)	Control word	Digital output	Status word
Control signals					
Enable master offset	Activates the master offset when *parameter 17-93 Master Offset Selection* is set to options *[0]–[5]*.	x	x	–	
Start homing	Starts selected homing function.	x	x	–	–
Start virtual master	Starts the virtual master.	x	x	–	–
Activate touch	Selects touch probe positioning mode.	x	x	–	–
Relative position	Selects between absolute and relative positioning.	x	x	–	–
Enable reference	Starts selected motion.	x	x	–	–
Sync. to position mode	Selects positioning in synchronizing mode.	x	x	–	–
Home sensor	Selects input for home sensor.	x	x	–	–
Home sensor inverse	Selects input for home sensor.	x	–	–	–
Touch sensor	Selects input for touch probe sensor.	x	x	–	–
Touch sensor inverse	Selects input for touch probe sensor.	x	–	–	–
Speed mode	Selects speed mode when *parameter 1-00 Configuration Mode* is set to *[9] Positioning* or *[10] Synchronization*.	x	x	–	–
Target inverse	Changes the sign of the set target position. For example, if the set target is 1000, the activation of this option changes the value to -1000.	x	x	–	–
Status signals					
Reverse after ramp	Indicates the sign of speed reference after the ramp.	–	–	x	–
Virtual master dir.	Controls the direction of slaves.	–	–	x	–
Homing OK	Homing is completed with the selected homing function.	–	–	X	X
On target	Positioning: Target position reached. Synchronization: Slave position aligned with master position.	–	–	x	x
Position error	Maximum position error exceeded.	–	–	x	x
Position limit	A position limit is reached (*parameter 3-06 Minimum Position* or *parameter 3-07 Maximum Position*).	–	–	x	–
Touch on target	Target position is reached in touch probe position mode.	–	–	x	x
Touch activated	Touch probe positioning active.	–	–	x	x

[1] *For best accuracy, use fast digital inputs 18, 32, and 33 for home and touch probe sensors.*

When *[3] FC Motion Profile* is selected in *parameter 8-10 Control Word Profile*, the bits in the control word and the status word have the following meaning:

Table 8: Control Word

Bit	0	1
0	Preset reference LSB	–
1	Preset reference MSB	–
2 [(1)]	Preset reference EXB	–
3	Coast stop	No coast stop
4	Quick stop	No quick stop
5 [(1)]	No reference	Enable reference
6	Ramp stop	Start
7	No reset	Reset
8	No jog	Jog
9 [(1)]	Absolute	Relative
10	Data not valid	Data valid
11 [(1)]	No homing	Start homing
12 [(1)]	No touch	Activate touch
13	Set-up select LSB	–
14	Set-up select MSB	–
15	No reversing	Reversing

[1] *Different from [0] FC Profile. Options for bits 0–2, and 12–15 in parameter 8-14 Configurable Control Word CTW:*

- *[11] Start Homing*
- *[12] Activate Touch Probe*
- *[13] Sync. to Pos. Mode*
- *[14] Ramp 2*
- *[15] Relay 1*
- *[16] Relay 2*
- *[17] Speed Mode*
- *[18] Start Virtual Master*
- *[19] Activate Master Offset*
- *[20] Target Inverse*
- *[26] Home Sensor*
- *[27] Touch Sensor*

Table 9: Status Word

Bit	0	1
0	Control not ready	Control ready
1	Drive not ready	Drive ready
2	Coasting	Enable
3	No error	Trip
4 [(1)]	Not homed	Home done
5	Reserved	Reserved
6	No error	Trip lock
7	No warning	Warning
8 [(1)]	Not on target position	Target position reached
9	Local operation	Bus control
10	Out of frequency limit	Frequency limit OK
11	No operation	In operation
12	Drive OK	Stopped, auto start
13	Voltage OK	Voltage exceeded
14	Torque OK	Torque exceeded
15	Timer OK	Timer exceeded

[1] *Different from [0] FC Profile. Options for bits 5 and 12–15 in parameter 8-13 Configurable Status Word STW:*

- *[4] Position Error*
- *[5] Position Limit*
- *[6] Touch on Target*
- *[7] Touch Activated*

5.3 Functional Safety

5.3.1 Protection of Personnel and Equipment

Danfoss AC drives offer functional safety solutions for smart machine design. The VLT® AutomationDrive has Safe Torque Off (STO) built-in as standard. Along with other safety functions, STO enhances application safety. The drive-based functional safety offering complies with the requirements of international standards and requirements, including European Union Machinery Directive 2006/42/EC.

The STO function complies with ISO 13849-1-PL d and SIL2 according to IEC 61508/IEC 62061. With the VLT® Safety Option MCB 150 Series, this safety function can be extended to include SS1, SLS, SMS, safe jog mode, and more. The speed monitoring functions are available both with and without speed feedback.

5.3.2 VLT® Safety Option MCB 150 and MCB 151

The MCB 150 and MCB 151 can be integrated directly in the AC drive and is prepared for future connection to common safety bus systems. The module is certified according to ISO 13849-1 up to PL d and IEC 61508/IEC 62061 up to SIL 2, and provides SS1, SLS, and SMS functionality according to IEC 61800-5-2. The option can be used in low- and high-demand applications. SS1 offers ramp- and time-based functionality. SLS can be configured both with and without ramp-down on activation. SMS can be activated continously without having a safe input.

5.3.3 VLT® Sensorless Safety MCB 159

When VLT® Safety Option MCB 151 is combined with the built-in VLT® Sensorless Safety MCB 159 option, an external sensor is no longer required for safe speed monitoring.

5.3.4 VLT® Safety Option MCB 152

The VLT® Safety Option MCB 152 operates the safety function of an AC drive via the PROFIsafe fieldbus combined with the VLT® PROFINET MCA 120 fieldbus option. Central and decentral drives at different machinery cells can easily be interconnected with the PROFIsafe safety fieldbus. The interconnection enables activation of the STO irrespectively of where a hazard occurs. The safety functions of the MCB 152 are implemented according to EN IEC 61800-5-2. Two configurable safe digital inputs are available for extension of safe I/Os.

The MCB 152 supports PROFIsafe functionality to activate integrated safety functions of the Danfoss from any PROFIsafe host up to Safety Integrity Level SIL 2 according to EN IEC 61508 and EN IEC 62061, Performance Level PL d, Category 3 according to EN ISO 13849-1.

5.3.5 Safety Functions

5.3.5.1 Safe Torque Off (STO)

STO is the required base for drive-based functional safety as defined per EN IEC 61800-5-2, as the STO function brings the drive safely to a no-torque state. STO is typically used for preventing an unexpected start-up (EN 1037) of machinery, or for an emergency stop fulfilling stop category 0 (EN 60204-1).

When STO is activated, it immediately switches off the drive output to the motor. Motor speed then coasts to a stop.

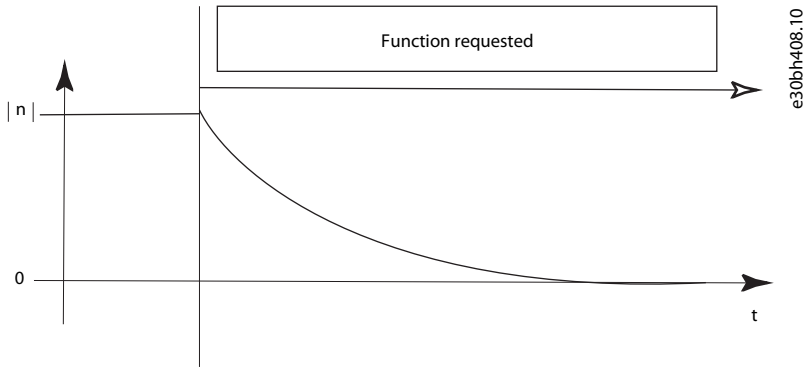

Illustration 20: Motor Speed Coasts to Stop After Activation of STO

5.3.5.2 Safe Stop 1 (SS1)

The Safe Stop 1 function stops the motor safely by using a controlled ramp stop and then activating the STO function. SS1 is typically used in applications like rolling mills where motion must be stopped in a controlled manner before switching to a no-torque state. In addition to a safe process stop, SS1 can be used to implement an emergency stop, fulfilling category 0 (EN 60204-1).

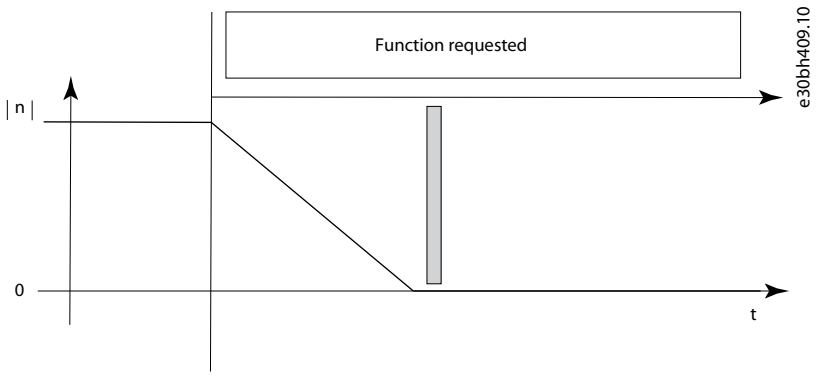

Illustration 21: Motor Speed Ramps Down to Standstill, SS1 then Activates STO

5.3.5.3 Safely Limited Speed (SLS)

The Safely Limited Speed function prevents motors from exceeding a defined speed limit. If the speed limit is exceeded, SLS activates the STO function, which stops the drive. The SLS safety function can be used in applications such as decanters, mixers, conveyors, or paper machines where excess speed can be hazardous during certain operations like maintenance or cleaning.

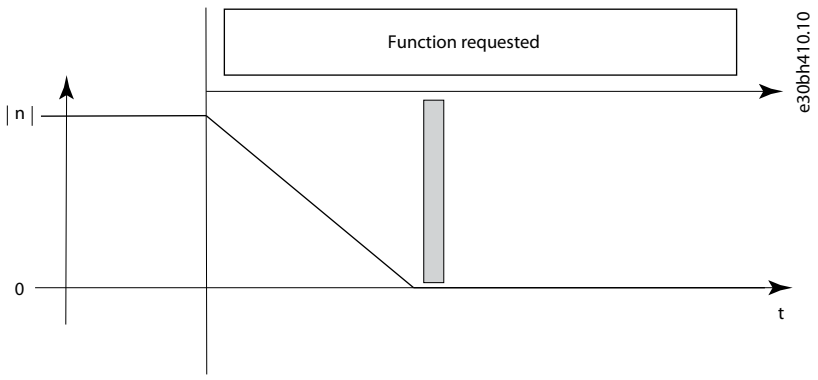

Illustration 22: SLS Monitoring Motor Speed

5.3.5.4 Safe Maximum Speed (SMS)

The SMS is a variant of the SLS safety function. It provides continuous protection against a motor exceeding a defined maximum speed limit. When SMS is used, it continuously monitors the motor speed. It is often used for centrifuges.

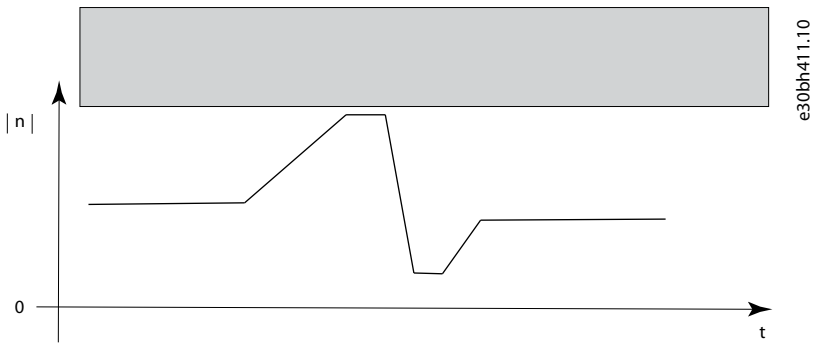

Illustration 23: SMS Ensuring that the Speed Limit is not Exceeded

5.3.5.5 PROFIsafe

As a software feature, PROFIsafe covers safety applications utilizing PROFIBUS and PROFINET in process and factory automation. The PROFIsafe protocol is suitable for both PROFIBUS and PROFINET networks without impacting the existing fieldbus standard. The protocol is also approved for wireless transmission channels such as Bluetooth and Wi-Fi.

5.4 Danfoss VLT® FlexConcept®

Modern manufacturing plants need higher efficiency, more flexibility, and greater reliability in their drive systems than ever before - all necessary to reduce manufacturing costs.

To meet that need, Danfoss has developed the VLT® FlexConcpet® - a modern, contemporary drive system using modern motor technology, combined with the most advanced inverter drives and developed as a unified system.

Danfoss VLT® FlexConcept® offers a flexible selection of drives for centralized location in control rooms or decentral units for mounting close to, or even on, the drive motors, giving greater flexibility in plant design and maintenance.

Danfoss VLT® FlexConcept® is an energy-efficient, flexible, and cost-efficient drive solution, mainly for conveyors. The concept consists of the VLT® OneGearDrive driven by the VLT® AutomationDrive FC 302 or VLT® Decentral Drive FCD 302.

VLT® OneGearDrive is a permanent magnet motor with a bevel gear. The bevel gear can be delivered with different gear ratios.

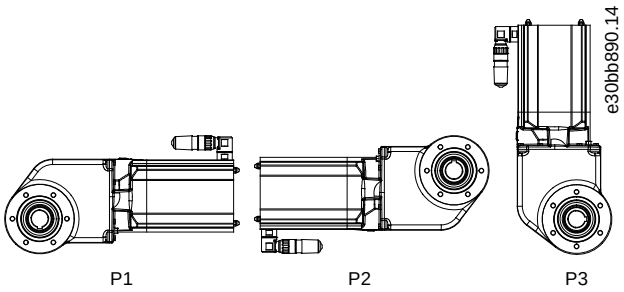

Illustration 24: VLT® OneGearDrive

The VLT® OneGearDrive can be driven by VLT® AutomationDrive FC 302 and VLT® Decentral Drive FCD 302 in the following power sizes depending on demands of the actual application:

- 0.75 kW (1.0 hp).
- 1.1 kW (1.5 hp).
- 1.5 kW (2.0 hp).
- 2.2 kW (3.0 hp).
- 3.0 kW (4.0 hp).

When *parameter 1-10 Motor Construction* is set to *[1] PM, Non-salient SPM* in either FC 302 or FCD 302, the VLT® OneGearDrive can be selected in *parameter 1-11 Motor Model*. The recommended parameters are set automatically.

For further information, refer to the VLT® AutomationDrive FC 301/FC 302 Programming Guide, the VLT® OneGearDrive Selection Guide, and http://files.danfoss.com/download/Drives/DKDDPB86A202_FlexConcept_LR.pdf.

5.5 Torque Sharing/Droop

Use the droop function when load distribution between drives connected to the same load is required. For example, in multi-motor operation for anchor winches, cranes, and conveyors.

Many large winches, cranes, or conveyors have to be powered by 2 or more motors. If 1 fails, the others can handle the load (if the drives are sufficiently oversized). The motors are usually connected to 2 or more drives to ensure that the application runs smoothly. By using the droop function in the drive, it ensures, for example, that the winch motors create an equal torque at any speed and any load. Only 1 drive is thus required to control the winch.

Torque sharing

- More than 1 motor on the same shaft - need for torque sharing.
- Designed for flux open-loop control/closed-loop control.
- Stiffness is configured in *parameter 1-62 Slip Compensation* or *parameter 7-01 Speed PID Droop* (compensation).

Benefits:

- Single setup.
- No master/slave, all are programmed as master, no communication needed between masters.
- Less inertia in more small motors compared with 1 large motor.

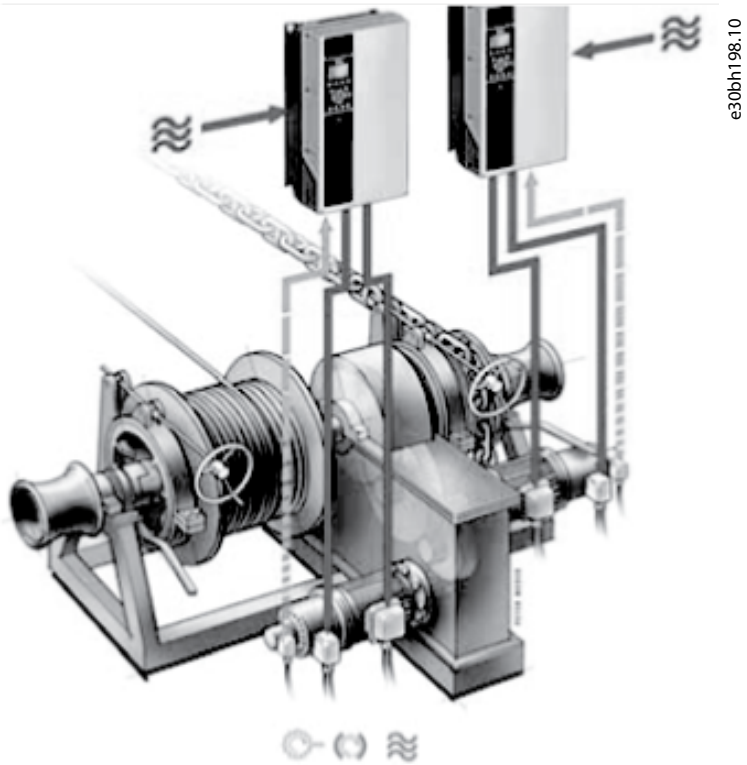

Illustration 25: Example of Torque Sharing

Commissioning of torque sharing drives

- Run drive in flux open-loop control/closed-loop control.
- Run drive in speed mode.
- Set negative value in *parameter 1-62 Slip Compensation*.
- Use same speed reference, start, and stop signals in all torque sharing drives.
- All torque sharing drives use the same parameters.

Example:

4-pole motor, nominal speed 1430 RPM ⇒ slip = 70 RPM at full load. If the reference is set to 1500 RPM and *parameter 1-62 Slip Compensation* is set to -50%, the motor runs 1465 RPM at full load.

- Torque sharing also work in overload situation.
- Torque sharing also works with different motors (not with same value in *parameter 1-62 Slip Compensation*). Use *parameter 7-01 Speed PID Droop* with the same values.

5.6 Power Limit Function

A power limit function limits the power distributed to the motor (power limit motor mode). Also, the power limit function can limit generative power fed back into the mains supply (AFE) or fed to a brake resistor (power limit generator mode). The power limit function is designed for flux open-loop control/closed-loop control and can be used for all motor types with flux control core (ASM-PM).

To activate the power limit, use a digital input or a fieldbus control word. To adjust the power limit level, use an analog input and/or fieldbus PCD channel.

Torque [Nm] = Power [W]/Speed [rad/sec]

The power limit function is activated and used in the following modes:

- Power limit always active (enabled).
- Power limit only when activated.
- Fixed power variable torque.
- Reduced power reduced speed (motor mode).

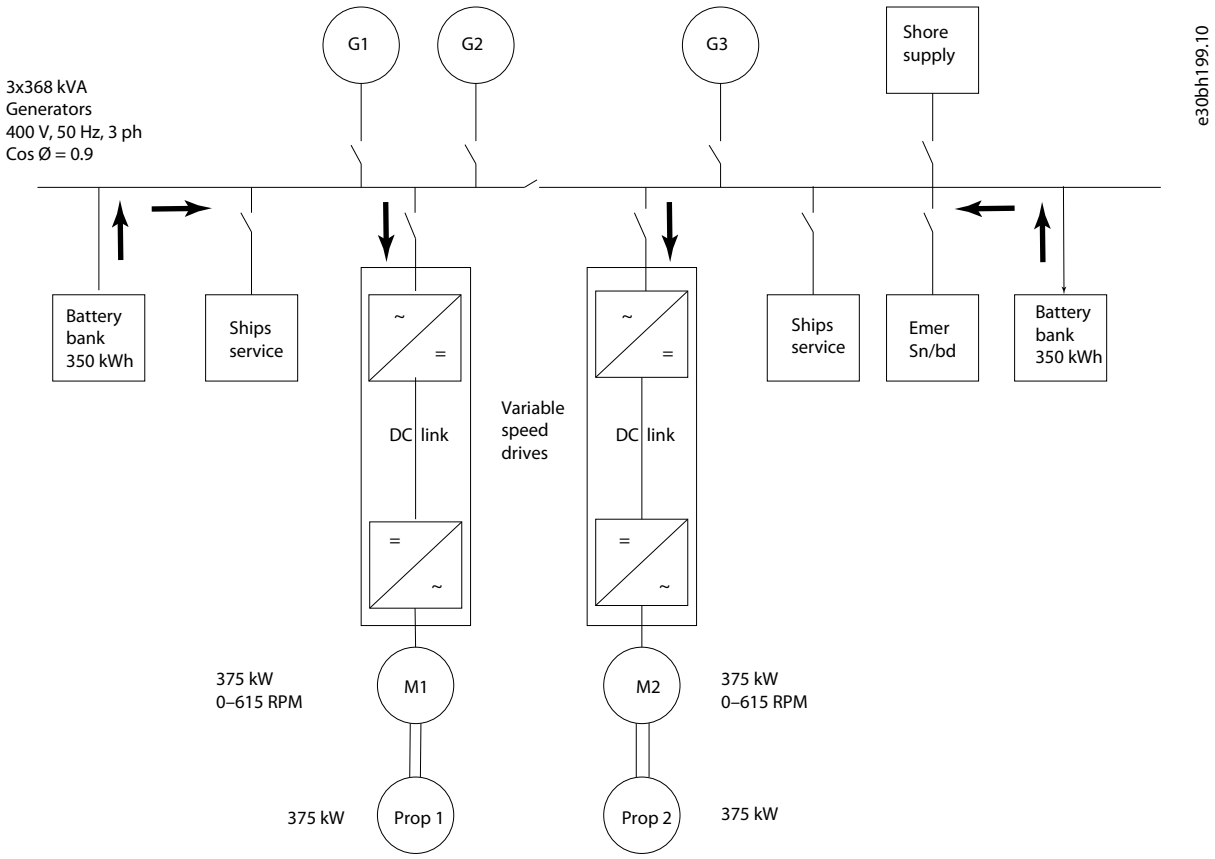

Illustration 26: Diagram of the Power Limit Function

The basic settings for the power that should be limited can be programmed via parameter settings. When power limit is active, *parameter 4-82 Power Limit Motor Mode* and *parameter 4-83 Power Limit Generator Mode* are used as limits. The drive then calculates the required torque levels to achieve a power limitation for motor/generator operation The motor speed is controlled so that the power limit values are not exceeded. When operating in power limit mode, the motor speed can deviate from the actual speed setpoint that is commanded.

One of the most common use cases for a power limit functionality is marine applications, such as winch and thruster applications, but the function can be used in all types of applications. On board a ship/vessel, the mains supply is always coming from a generator system. In many cases, several generators supply the total electrical load on the ship/vessel. If 1 of these generators fails/trips, the total power requirement cannot be fulfilled anymore. To insure availability fo critical parts of the application, a limited power consumption could keep the installation available and prevent the remaining generators from being instantly overloaded. The application can remain running when a power limit function is activated because the power is kept within the defined limits.

5.7 Service Log

The service log is a data logger extension (alarm data saved in drive memory and exportable to VLT® Motion Control Tool MCT 10). If certain alarms occur, the system saves a detailed log in 5 s increments.

Service technicians can analyze this information to troubleshoot and optimize the drive.

The drive saves up to 24 service log records in the flash memory. If the RTC (real-time clock) has been set in the drive, all errors and log files are date- and time-stamped.

The relevant service log file can then be analyzed as a scope in MCT 10. Danfoss specifies the channels. All scope functions such as Auto-scale and Diagnostics can be used. The HEX ad binary value can be shown, which also helps with the analysis.

Table 10: Alarms Triggering a Service Log Record

Alarm	Alarm log data	Parameter number
1	Time of trip (1 of the values): • Priority RTC (if available). • Priority operating time (if RTC is not available).	*Parameter 0-89 Date and Time Readout* or *parameter 15-32 Fault Log: Time*
2	Alarm code	*Parameter 15-30 Fault Log: Error Code*
3	Frequency	*Parameter 16-13 Frequency*
4	Speed (RPM)	*Parameter 16-17 Speed [RPM]*
5	Reference %	*Parameter 16-02 Reference %*
7	DC-link voltage	*Parameter 16-30 DC Link Voltage*
9	Motor phase U current	*Parameter 16-45 Motor Phase U Current*
10	Motor phase V current	*Parameter 16-46 Motor Phase V Current*
11	Motor phase W current	*Parameter 16-47 Motor Phase W Current*
12	Motor phase voltage	*Parameter 16-12 Motor Current*
15	Control word	*Parameter 16-00 Control Word*
16	Status word	*Parameter 16-03 Status Word*

Application-dependent trips/alarms such as Safe Torque Off (STO), do not trigger a service log record.

Sampling rate

There are 2 periods with different sampling rates:

- Slow samples: 20 samples at a rate of 250 ms resulting in 5 s of history before the trip.
- Fast samples: 50 samples at a rate of 5 ms resulting in 250 ms of detailed history before the trip.

5.8 Maintenance Functions

Danfoss VLT® drives feature preventive and condition-based monitoring functions.

5.8.1 Preventive Maintenance

Schedule maintenance based on a running hours counter. When planned maintenance occurs, the drive shows a message. Action flags can be transferred via fieldbus. *Parameter group 18-0* Maintenance Log* contains the last 10 preventive maintenance events. Maintenance log 0 is the latest log and maintenance log 9 is the oldest.

Parameters 18-00 to *18-03* show the maintenance item, the action, and the time of the occurrence.

The alarm log key gives access to both alarm log and maintenance log.

5.8.2 Condition-based Monitoring

The function uses the drive as a smart sensor for monitoring the condition of the motor and application. The VLT® AutomationDrive FC 302 features licensed functions that enforce predictive maintenance actions, such as:

- Motor stator winding monitoring.
- Vibration monitoring.
- Load envelope monitoring.

Set various thresholds and determine the baseline with different methods according to relevant standards and guidelines such as the ISO 13373 standard for Condition Monitoring and Diagnostics of Machines or the VDMA 24582 guideline for condition monitoring.

The condition-based maintenance parameters are in *parameter group 45-** Condition Based Monitoring*.

5.8.2.1 Motor Stator Winding Monitoring

Motor winding failures lead to stop of operation and, thus, unwanted downtime. Motor winding failures start with a short circuit between 2 windings. Over time, the short circuit leads to a motor short circuit fault. By using the motor stator winding monitoring function, motor isolation faults are detected at an early stage, allowing maintenance of the motor before the winding fails entirely due to overheating.

- By analyzing the motor current signature, the drive detects motor winding damage at an early stage.
- The function does not require any external sensors.
- The drive sends a warning/alarm to the LCP or fieldbus.

5.8.2.2 Vibration Monitoring

The VLT® AutomationDrive FC 302 can be used with an external vibration transducer (velocity or acceleration type 4–20 mA) to monitor the vibration level in a motor or application. The available functions are baseline measurement, broadband trending, vibration during acceleration and deceleration, and transient vibration trending. The vibration monitoring is performed using standardized methods and threshold levels given in standards such as ISO 13373 for condition monitoring and diagnostics of machines or ISO 10816/20816 for measurement and classification of mechanical vibration. The advantage of performing this monitoring in the drive is the possibility of correlating data with the actual operating conditions such as steady state running/ramping, load condition, or speed.

- The function detects faults as:
  - Imbalance and eccentricity.
  - Looseness.
  - Misalignment.
  - Mechanical resonance.
- The function is not able to identify bearing wear-out in early stages.
- Drive correlates vibration with motor speed.

NOTICE

EVALUATING VIBRATION

The ISO 10816 standard provides guidance for evaluating vibration severity for machines operating within 10–200 Hz of frequency range. The standard shall be complied with before commissioning of vibration monitoring function.

5.8.2.3 Load Envelope

The VLT® AutomationDrive FC 302 can determine a baseline load curve for the application. When wear-out occurs, the load curve moves and triggers a maintenance warning. The function is useful for fault detection in various applications with passive load:

- Fouling, sanding, broken impeller, or wear-out of pumps.
- Clogged filters and leakages in ventilation systems.
- Friction in machines.

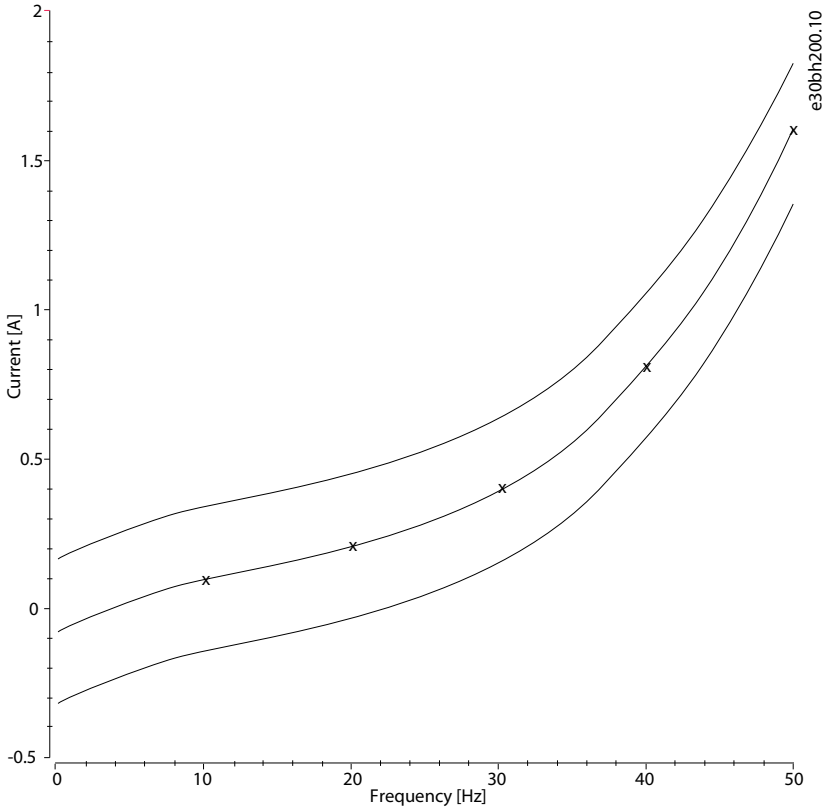

Illustration 27: Load Curve Example for Load Envelope Monitoring

6 Product Features

6.1 Automated Operational Features

6.1.1 Short-circuit Protection

Motor (phase-to-phase)

The drive is protected against short circuits on the motor side by current measurements in each of the 3 motor phases. A short circuit between 2 output phases causes an overcurrent in the inverter. The inverter is turned off when the short circuit current exceeds the allowed value (*Alarm 16, Trip Lock*).

Mains side

A drive that works correctly limits the current it can draw from the supply. Still, it is recommended to use fuses and/or circuit breakers on the supply side as protection if there is a component breakdown inside the drive (1st fault). Mains side fuses are mandatory for UL compliance.

NOTICE

To ensure compliance with IEC 60364 for CE or NEC 2009 for UL, it is mandatory to use fuses and/or circuit breakers.

Brake resistor

The drive is protected from a short circuit in the brake resistor.

Load sharing

To protect the DC bus against short circuits and the drives from overload, install DC fuses in series with the load sharing terminals of all connected units.

6.1.2 Overvoltage Protection

Motor-generated overvoltage

The DC-link voltage is increased when the motor acts as a generator. This occurs in the following situations:

- The load drives the motor (at constant output frequency from the drive), that is, the load generates energy.
- During deceleration (ramp-down) if the moment inertia is high, the friction is low, and the ramp-down time is too short for the energy to be dissipated as a loss in the drive, the motor, and the installation.
- Incorrect slip compensation setting may cause higher DC-link voltage.
- Back EMF from PM motor operation. If coasted at high RPM, the PM motor back EMF may potentially exceed the maximum voltage tolerance of the drive and cause damage. To help prevent this, the value of *parameter 4-19 Max Output Frequency* is automatically limited based on an internal calculation. This calculation is based on the value of *parameter 1-40 Back EMF at 1000 RPM*, *parameter 1-25 Motor Nominal Speed*, and *parameter 1-39 Motor Poles*.

NOTICE

To avoid that the motor overspeeds (for example, due to excessive windmilling effects), equip the drive with a brake resistor.

The overvoltage can be handled either via using a brake function (*parameter 2-10 Brake Function*) and/or using overvoltage control (*parameter 2-17 Over-voltage Control*).

Brake functions

Connect a brake resistor to dissipate surplus brake energy. Connecting a brake resistor allows a higher DC-link voltage during braking. AC brake is an alternative to improve breaking without using a brake resistor. This function controls an overmagnetization of the motor when running regenerative, which can improve the OVC. Increasing the electrical losses in the motor allows the OVC function to increase the breaking torque without exceeding the overvoltage limit.

NOTICE

An AC brake is not as efficient as dynamic braking with a resistor and should not be used on frequently repeated braking applications as it may overheat the motor.

Overvoltage control (OVC)

OVC reduces the risk of the drive tripping due to an overvoltage on the DC link. This is managed by automatically extending the ramp-down time.

NOTICE

OVC can be activated for PM motors with control core, PM VVC$^+$, Flux open-loop control, and Flux closed-loop control.

NOTICE

LOSS OF HOIST CONTROL

Do not enable OVC in hoisting applications. If OVC is used with a hoist, the OVC will try to regulate the DC bus by spinning the motor faster, resulting in loss of hoisting control and/or damage to the hoist.

6.1.3 Missing Motor Phase Detection

The missing motor phase function (*parameter 4-58 Missing Motor Phase Function*) is enabled by default to avoid motor damage if a motor phase is missing. The default setting is 1000 ms, but it can be adjusted for a faster detection.

6.1.4 Mains Phase Imbalance Detection

Operation under severe mains imbalance conditions reduces the lifetime of the drive. Conditions are considered severe if the motor is operated continuously near nominal load. The default setting trips the drive if mains imbalance occurs (*parameter 14-12 Function at Mains Imbalance*).

6.1.5 Switching on the Output

Adding a switch to the output between the motor and the drive is allowed, however, fault messages can appear. Danfoss recommends not to use this feature for 525–690 V drives connected to an IT mains network.

6.1.6 Overload Protection

Torque limit

The torque limit feature protects the motor against overload, independent of the speed. Torque limit is controlled in *parameter 4-16 Torque Limit Motor Mode* and *parameter 4-17 Torque Limit Generator Mode*. The time before the torque limit warning trips is controlled in *parameter 14-25 Trip Delay at Torque Limit*.

Current limit

The current limit is controlled in *parameter 4-18 Current Limit*, and the time before the drive trips is controlled in *parameter 14-24 Trip Delay at Current Limit*.

Speed limit

Minimum speed limit: *Parameter 4-11 Motor Speed Low Limit [RPM]* or *parameter 4-12 Motor Speed Low Limit [Hz]* limit the minimum operating speed range of the drive. Maximum speed limit: *Parameter 4-13 Motor Speed High Limit [RPM]* or *parameter 4-19 Max Output Frequency* limit the maximum output speed the drive can provide.

Electronic thermal relay (ETR)

ETR is an electronic feature that simulates a bimetal relay based on internal measurements. See illustration 35.

Voltage limit

The inverter turns off to protect the transistors and the DC link capacitors when a certain hard-coded voltage level is reached.

Overtemperature

The drive has built-in temperature sensors and reacts immediately to critical values via hard-coded limits.

6.1.7 Locked Rotor Protection

There can be situations when the rotor is locked due to excessive load or other factors. The locked rotor cannot produce enough cooling, which in turn can overheat the motor winding. The drive is able to detect the locked rotor situation with open-loop PM flux control and PM VVC+ control (*parameter 30-22 Locked Rotor Detection*).

6.1.8 Automatic Derating

The drive constantly checks for critical levels:

- Critical high temperature on the control card or heat sink.
- High motor load.
- High DC-link voltage.
- Low motor speed.

As a response to a critical level, the drive adjusts the switching frequency. For critical high internal temperatures and low motor speed, the drive can also force the PWM pattern to SFAVM.

NOTICE

DERATING WITH SINE-WAVE FILTER

The automatic derating is different when *parameter 14-55 Output Filter* is set to *[2] Sine-Wave Filter Fixed*.

- Refer to the programming guide for more information.

6.1.8.1 Overview of Automatic Derating

The automatic derating is made up of contributions from separate functions that evaluate the need. Their interrelationship is shown in illustration 29.

NOTICE

In sine-wave filter fixed mode, the structure is different.

- See 6.1.8.2 Sine-wave Filter Fixed Mode.

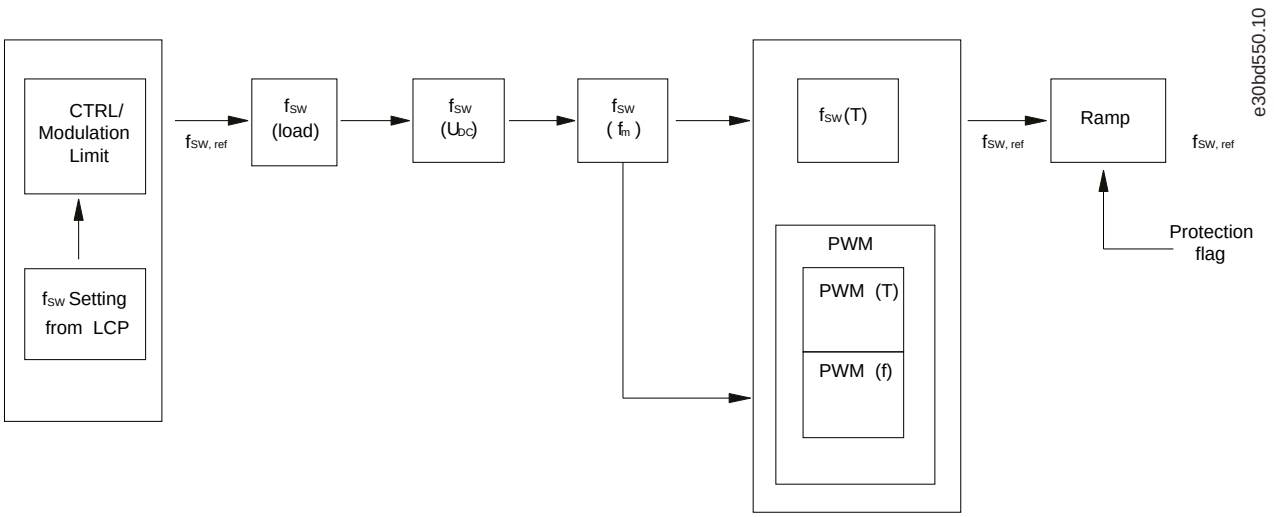

Illustration 28: Automatic Derating Function Block

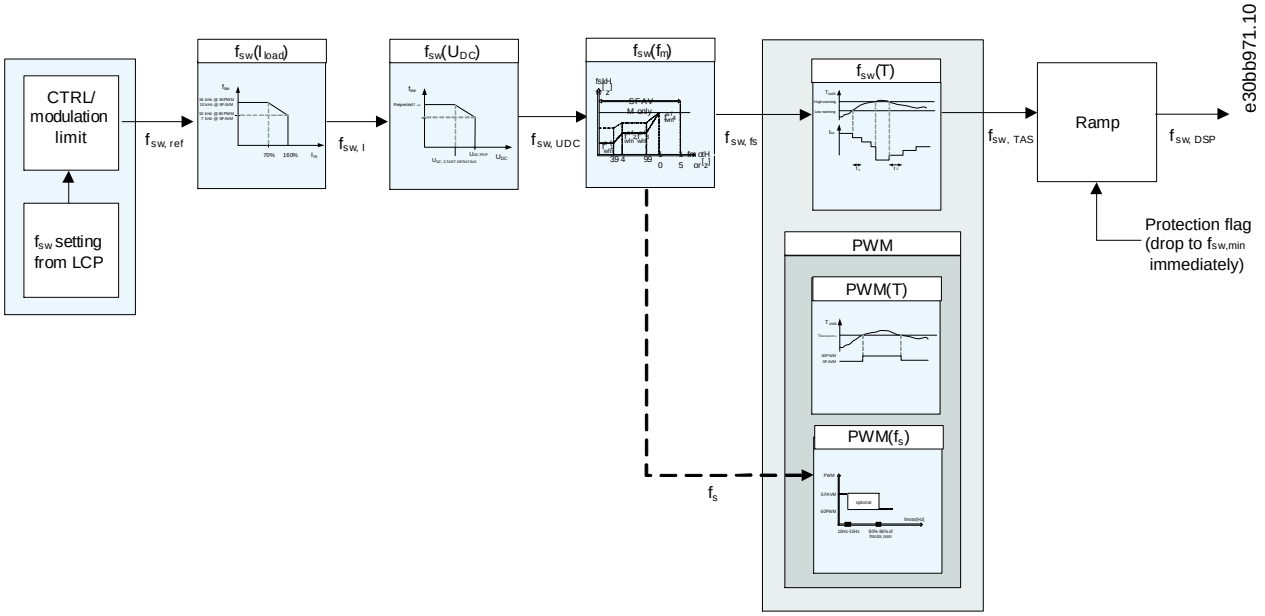

Illustration 29: Interrelationship Between the Automatic Derating Contributions

The switching frequency is first derated due to motor current, followed by DC-link voltage, motor frequency, and then temperature. If multiple deratings occur on the same iteration, the resulting switching frequency would be the same as though only the most significant derating occurred by itself (the deratings are not cumulative). Each of these functions is presented in the following sections.

6.1.8.2 Sine-wave Filter Fixed Mode

When using sine-wave filters, it is important to operate the filters within a safe range of switching frequencies. If the switching frequency is too low, there is a risk that the filter leaks oil, which may cause the drive to overheat.

During programming of the drive, it is possible to select an option for setting a minimum limit for the switching frequency. This fixed-mode function prevents the swithcing frequencies from being too low.

6.1.8.3 Overview Table

Table 11: Overview - Derating

Background for derating	PWM - Functions that adjust the switching pattern	f_{sw} – Functions that derate the switching frequency
I_{load} ↑	No automatic derating	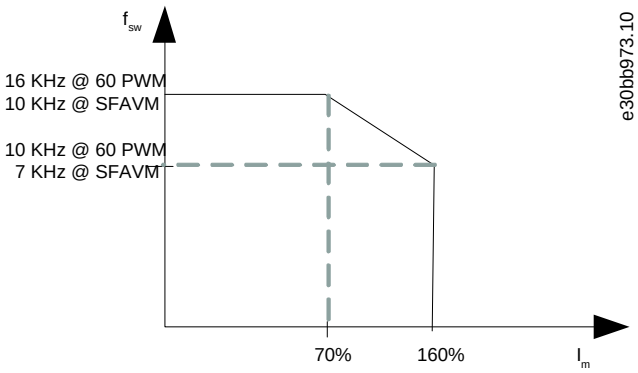
U_{dc} ↑	No automatic derating	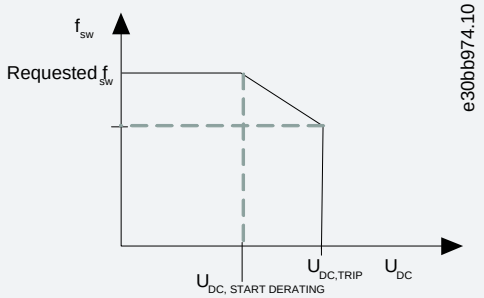
f_s	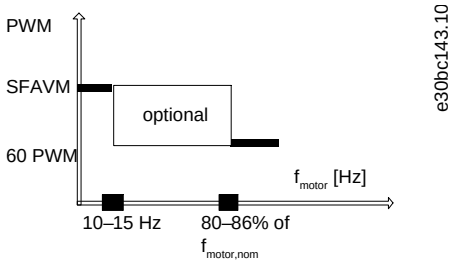	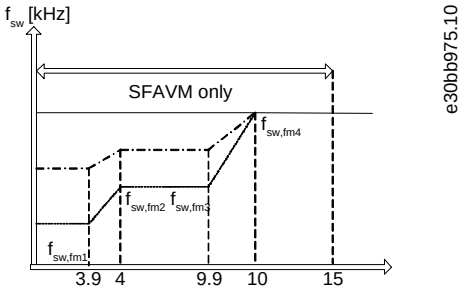
T ↑	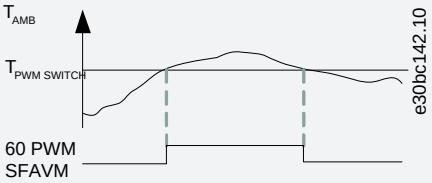	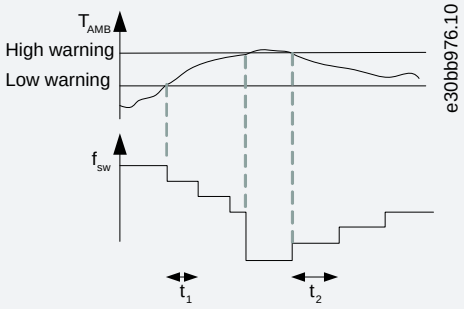

6.1.8.4 High Motor Load

The switching frequency is adjusted automatically according to the motor current. When a certain percentage of the nominal HO motor load is reached, the switching frequency is derated. This percentage is individual for each frame size and a value that is coded in the EEPROM along with the other points that limit the derating.

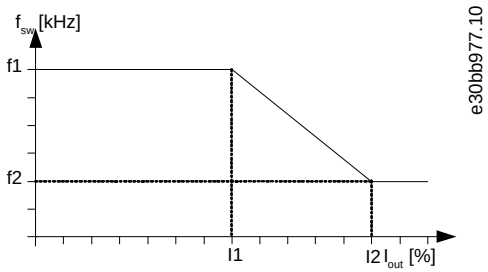

Illustration 30: Derating of switching frequency according to motor load. f1, f2, I1, and I2 are coded in EEPROM.

In EEPROM, the limits depend on the modulation mode. In 60° AVM, f1 and f2 are higher than for SFAVM. I1 and I2 are independent of the modulation mode.

6.1.8.5 High Voltage on the DC link

The switching frequency is adjusted automatically according to the voltage on the DC link. When the DC link reaches a certain magnitude, the switching frequency is derated. The points that limit the derating are individual for each frame size and are coded in the EEPROM.

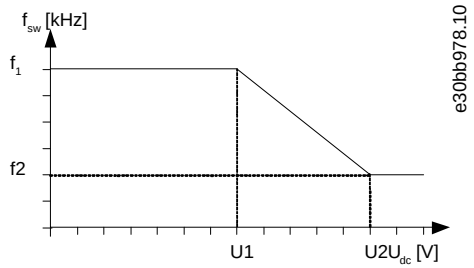

Illustration 31: Derating of switching frequency according to voltage on the DC link. f1, f2, U1, and U2 are coded in EEPROM.

In EEPROM, the limits depend on the modulation mode. In 60° AVM, f1 and f2 are higher than for SFAVM. U1 and U2 are independent of the modulation mode.

6.1.8.6 Low Motor Speed

The selection of PWM strategy depends on the stator frequency. To prevent that the same IGBT is running for too long (thermal consideration), $f_{m,switch1}$ is specified as the minimum stator frequency for 60° PWM. $f_{m,switch2}$ is specified as the maximum stator frequency for SFAVM to protect the drive. 60° PWM helps to reduce the inverter loss above $f_{m,switch1}$ as the switch loss is reduced by 1/3 by changing from SFAVM to 60° AVM.

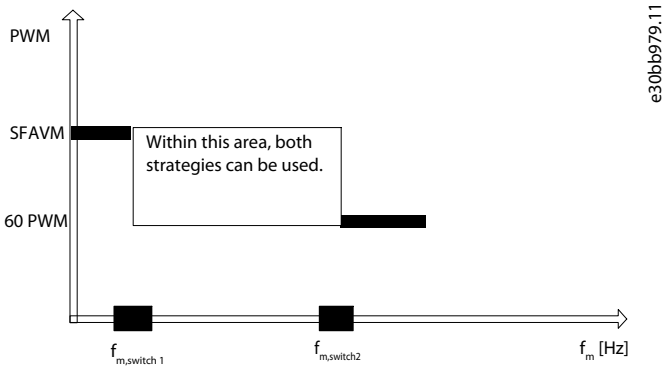

Illustration 32: Selection of PWM Strategy

The shape of the average temperature is constant regardless of the stator frequency. The peak temperature, however, follows the shape of the output power for small stator frequencies and goes towards the average temperature for increasing stator frequency. This results in higher temperature variations for small stator frequencies. This means that the expected lifetime of the component decreases for small stator frequencies if no compensation is used. Therefore, for low values of the stator frequency where the temperature variations are large, the switching frequency can be reduced to lower the peak temperature and thereby the temperature variations.

For VT applications, the load current is relatively small for small stator frequencies and the temperature variations are thus not as large as for the CT applications. For this reason, also the load current is considered.

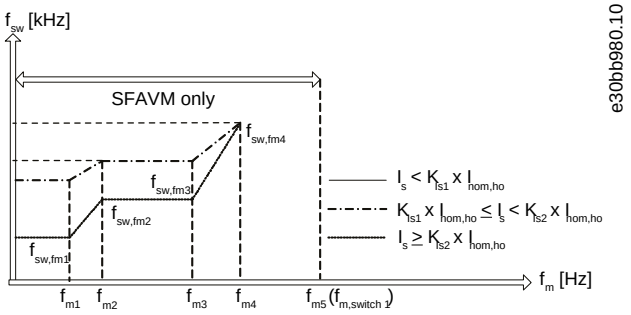

Illustration 33: Switching Frequency (f_{sw}) Variation for Different Stator Frequencies (fm)

The points that limit the derating are individual for each frame size and are coded in the EEPROM.

NOTICE

The VLT® AutomationDrive FC 301/FC 302 never derates the current automatically. Automatic derating refers to adaptation of the switching frequency and pattern.

For VT applications, the load current is considered before derating the switching frequency at low motor speed.

6.1.8.7 High Internal Temperature

The switching frequency is derated based on both control card- and heat sink temperature. This function may sometimes be referred to as the temperature-adaptive switching frequency function (TAS).

NOTICE

In the example, 1 temperature affects the derating. In fact there are 2 limiting temperatures: control card temperature and heat sink temperature. Both have their own set of control temperatures.

- See illustration 34.

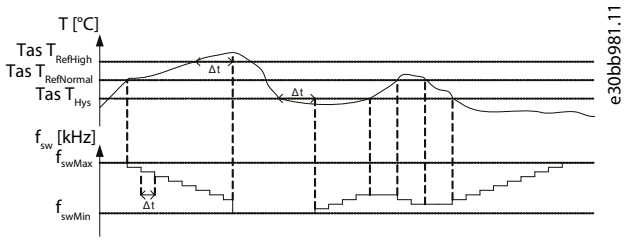

Illustration 34: Switching Frequency Derating due to High Temperature

NOTICE

dt is 10 s when the control card is too hot but 0 s when the heat sink is too hot (more critical).

The high warning can only be violated for a certain time before the drive trips.

6.1.8.8 Current

Derate the output current at high temperatures. This calculation takes place after the calculations for derating the switching frequency. The result is an attempt to lower the temperatures by first lowering the switching frequency, and then lowering the output current. Current derating only takes place if the user has programmed the unit to derate in overtemperature situations. If the user has selected a trip function for overtemperature situations, the current derate factor is not lowered.

6.1.9 Automatic Energy Optimization

Automatic energy optimization (AEO) directs the drive to monitor the load on the motor continuously and adjust the output voltage to maximize efficiency. Under light load, the voltage is reduced and the motor current is minimized. The motor benefits from:

- Increased efficiency.
- Reduced heating.
- Quieter operation.

When using induction motors, the drive can optimize the energy efficiency of the motor in part load conditions by reducing the magnetization of the motor. This leads to reduced losses in the motor.

The updated AEO function features improved dynamics. This means that the AEO function can also be used in applications where a higher starting torque is required (for example, waste water pumps) or there are step load changes (such as conveyors). There is no need to select a V/Hz curve because the drive automatically adjusts motor voltage.

The AEO requires correct advanced motor data meaning that a complete automatic motor adaptation (AMA) has to be run.

6.1.10 Automatic Switching Frequency Modulation

The drive generates short electrical pulses to form an AC wave pattern. The switching frequency is the rate of these pulses. A low switching frequency (slow pulsing rate) causes audible noise in the motor, making a higher switching frequency preferable. A high switching frequency, however, generates heat in the drive that can limit the amount of current available to the motor.

Automatic switching frequency modulation regulates these conditions automatically to provide the highest switching frequency without overheating the drive. By providing a regulated high switching frequency, it quiets motor operating noise at slow speeds, when audible noise control is critical, and produces full output power to the motor when required.

6.1.11 Automatic Derating for High Switching Frequency

The drive is designed for continuous, full-load operation at switching frequencies between 1.5–2 kHz for 380–480 V, and 1–1.5 kHz for 525–690 V. The frequency range depends on power size and voltage rating. A switching frequency exceeding the maximum allowed range generates increased heat in the drive and requires the output current to be derated.

An automatic feature of the drive is load-dependent switching frequency control. This feature allows the motor to benefit from as high a switching frequency as the load allows.

6.1.12 Power Fluctuation Performance

The drive withstands mains fluctuations such as:

- Transients.
- Momentary dropouts.
- Short voltage drops.
- Surges.

The drive automatically compensates for input voltages ±10% from the nominal to provide full rated motor voltage and torque. With auto restart selected, the drive automatically powers up after a voltage trip. With flying start, the drive synchronizes to motor rotation before start.

6.1.13 Resonance Damping

Resonance damping eliminates the high-frequency motor resonance noise. Automatic or manually selected frequency damping is available.

6.1.14 Temperature-controlled Fans

Sensors in the drive regulate the operation of the internal cooling fans. Often, the cooling fans do not run during low load operation, or when in sleep mode or standby. These sensors reduce noise, increase efficiency, and extend the operating life of the fan.

6.1.15 EMC Compliance

Electromagnetic interference (EMI) and radio frequency interference (RFI) are disturbances that can affect an electrical circuit due to electromagnetic induction or radiation from an external source. The drive is designed to comply with the EMC product standard for drives IEC 61800-3 and the European standard EN 55011. Motor cables must be shielded and properly terminated to comply with the emission levels in EN 55011. For more information regarding EMC performance, see the EMC Test Results section.

6.1.16 Galvanic Isolation of Control Terminals

All control terminals and output relay terminals are galvanically isolated from mains power, which completely protects the controller circuitry from the input current. The output relay terminals require their own grounding. This isolation meets the stringent protective extra-low voltage (PELV) requirements for isolation.

The components that make up the galvanic isolation are:

- Supply, including signal isolation.
- Gate drive for the IGBTs, trigger transformers, and optocouplers.
- The output current Hall effect transducers.

6.2 Custom Application Features

Custom application functions are the most common features programmed in the drive for enhanced system performance. They require minimum programming or set-up. See the programming guide for instructions on activating these functions.

6.2.1 Automatic Motor Adaptation (AMA)

Automatic motor adaptation (AMA) is an automated test procedure used to measure the electrical characteristics of the motor. AMA provides an accurate electronic model of the motor, allowing the drive to calculate optimal performance and efficiency. Running the AMA procedure also maximizes the automatic energy optimization feature of the drive. AMA is performed without the motor rotating and without uncoupling the load from the motor.

6.2.2 Motor Thermal Protection

Motor thermal protection can be provided via:

- Direct temperature sensing using a
  - PTC- or KTY sensor in the motor windings and connected on a standard AI or DI.
  - PT100 or PT1000 in the motor windings and motor bearings, connected on VLT® Sensor Input Card MCB 114 and VLT® Programmable I/O MCB 115.
  - PTC thermistor input on VLT® PTC Thermistor Card MCB 112 (ATEX-approved).
- Mechanical thermal switch (Klixon type) on a DI.
- Built-in electronic relay (ETR).

ETR calculates motor temperature by measuring current, frequency, and operating time. The drive shows the thermal load on the motor in percentage and can issue a warning at a programmable overload setpoint. Programmable options at the overload allow the drive to stop the motor, reduce output, or ignore the condition. Even at low speeds, the drive meets I2t Class 20 electronic motor overload standards.

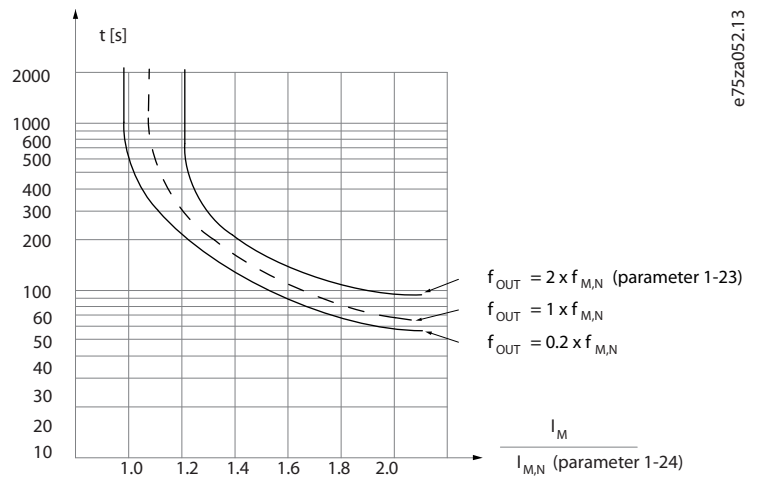

Illustration 35: ETR Characteristics

The X-axis shows the ratio between I_{motor} and I_{motor} nominal. The Y-axis shows the time in seconds before the ETR cuts off and trips the drive. The curves show the characteristic nominal speed at twice the nominal speed and at 0.2 x the nominal speed. At lower speed, the ETR cuts off at lower heat due to less cooling of the motor. In that way, the motor is protected from being overheated even at low speed. The ETR feature calculates the motor temperature based on actual current and speed. The calculated temperature is visible as a readout parameter in *parameter 16-18 Motor Thermal*. A special version of the ETR is also available for EX-e or EX-n motors in ATEX areas. This function makes it possible to enter a specific curve to protect the Ex-e motor. See the Programming Guide for set-up instructions.

6.2.3 Motor Thermal Protection for Ex-e or Ex-n Motors

The drive is equipped with an ATEX ETR thermal monitoring function for operation of Ex-e or Ex-n motors according to EN 60079-7. When combined with an ATEX-approved PTC monitoring device such as the VLT® PTC Thermistor Card MCB 112 or an external device, the installation does not require an individual approval from an approbated organization.

The ATEX ETR thermal monitoring function enables use of an Ex-e or Ex-n motor instead of a more expensive, larger, and heavier Ex-d motor. The function ensures that the drive limits motor current to prevent overheating.

Requirements related to the Ex-e motor

NOTICE

Install the drive outside the hazardous zone.

- Ensure that the Ex-e motor is approved for operation in hazardous zones (ATEX zone 1/21, ATEX zone 2/22) with drives. The motor must be certified for the specific hazardous zone.
- Install the Ex-e motor in zone 1/21 or 2/22 of the hazardous zone, according to motor approval.
- Ensure that the Ex-e motor is equipped with an ATEX-approved motor overload protection device. This device monitors the temperature in the motor windings. If there is a critical temperature level or a malfunction, the device switches off the motor.
  - The VLT® PTC Thermistor MCB 112 option provides ATEX-approved monitoring of motor temperature. It is a prerequisite that the drive is equipped with 3–6 PTC thermistors in series according to DIN 44081 or 44082.
  - Alternatively, an external ATEX-approved PTC protection device can be used.
- Sine-wave filter is required when the following apply:
  - Long cables (voltage peaks) or increased mains voltage produce voltages exceeding the maximum allowable voltage at motor terminals.
  - Minimum switching frequency of the drive does not meet the requirement stated by the motor manufacturer. The minimum switching frequency of the drive is shown as the default value in *parameter 14-01 Switching Frequency*.

Compatibility of motor and drive

For motors certified according to EN-60079-7, a data list including limits and rules is supplied by the motor manufacturer as a datasheet, or on the motor nameplate. During planning, installation, commissioning, operation, and service, follow the limits and rules supplied by the manufacturer for:

- Minimum switching frequency.
- Maximum current.
- Minimum motor frequency.
- Maximum motor frequency.

The requirements are indicated on the motor nameplate, see illustration 36.

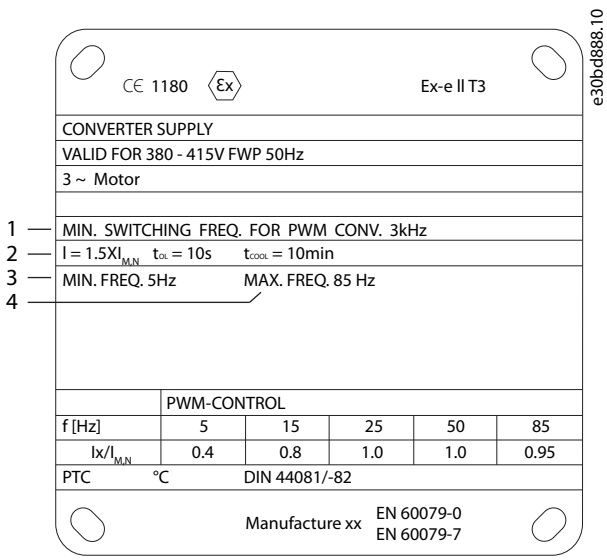

Illustration 36: Motor Nameplate showing Drive Requirements

When matching drive and motor, Danfoss specifies the following extra requirements to ensure adequate motor thermal protection:

- Do not exceed the maximum allowed ratio between drive size and motor size. The typical value is $I_{VLT,n} \leq 2 \times I_{m,n}$.
- Consider all voltage drops from drive to motor. If the motor runs with lower voltage than listed in the U/f characteristics, current can increase, triggering an alarm.

6.2.4 Mains Dropout

During a mains dropout, the drive keeps running until the DC-link voltage drops below the minimum stop level. The minimum stop level is typically 15% below the lowest rated supply voltage. The mains voltage before the dropout and the motor load determines how long it takes for the drive to coast.

Configure the mains dropout function of the drive in *parameter 14-10 Mains Failure*. The options are:

- Trip lock.
- Coast with flying start.
- Kinetic back-up.
- Controlled ramp-down.

Flying start

Flying start enables catching a motor that is spinning freely due to a mains dropout. This option is relevant for high-inertia applications, such as centrifuges and fans.

Kinetic back-up

This selection ensures that the drive runs as long as there is energy in the system. For short mains dropout, the operation is restored after mains return without bringing the application to a stop or losing control at any time. Several variants of kinetic back-up can be selected.

Configure the behavior of the drive at mains dropout in *parameter 14-10 Mains Failure* and *parameter 1-73 Flying Start*.

6.2.5 Built-in PID Controller

The built-in proportional, integral, derivative (PID) controller eliminates the need for auxiliary control devices. The PID controller maintains constant control of closed-loop systems where regulated pressure, flow, temperature, or other system requirements must be maintained.

The drive can use 2 feedback signals from 2 different devices, allowing the system to be regulated with different feedback requirements. The drive makes control decisions by comparing the 2 signals to optimize system performance.

6.2.6 Automatic Restart

The drive can be programmed to restart the motor automatically after a minor trip, such as momentary power loss or fluctuation.

This feature eliminates the need for manual resetting and enhances automated operation for remotely controlled systems. The number of restart attempts and the duration between attempts can be limited.

6.2.7 Flying Start

Flying start allows the drive to synchronize with an operating motor rotating at up to full speed in either direction. This prevents trips due to overcurrent draw. It minimizes mechanical stress to the system since the motor receives no abrupt change in speed when the drive starts.

6.2.8 Full Torque at Reduced Speed

The drive follows a variable V/Hz curve to provide full motor torque even at reduced speeds. Full output torque can coincide with the maximum designed operating speed of the motor. This drive differs from variable torque drives and constant torque drives. Variable torque drives provide reduced motor torque at low speed. Constant torque drives provide excess voltage, heat, and motor noise at less than full speed.

6.2.9 Frequency Bypass

In some applications, the system can have operational speeds that create a mechanical resonance. This mechanical resonance can generate excessive noise and possibly damage mechanical components in the system. The drive has 4 programmable bypass-frequency bandwidths (*parameters 4-60* to *4-63*). The bandwidths allow the motor to step over speeds that induce system resonance.

6.2.10 Motor Preheat

To preheat a motor in a cold or damp environment, a small amount of DC current can be trickled continuously into the motor to protect it from condensation and cold starts.

See *parameter 2-00 DC Hold Current in the programming guide*) for more detail.

The motor preheat function can eliminate the need for a space heater.

6.2.11 Programmable Set-ups

The drive has 4 set-ups that can be independently programmed. Using multi-setup, it is possible to switch between independently programmed functions activated by digital inputs or a serial command. Independent set-ups are used, for example, to change references, or for day/ night or summer/winter operation, or to control multiple motors. The LCP shows the active set-up.

Set-up data can be copied from drive to drive by downloading the information from the removable LCP.

6.2.12 Smart Logic Controller

Smart logic control (SLC) is a sequence of user-defined actions (see *parameter 13-52 SL Controller Action* [x]) executed by the SLC when the associated user-defined event (see *parameter 13-51 SL Controller Event* [x]) is evaluated as true by the SLC.

The condition for an event can be a particular status or that the output from a logic rule or a comparator operand becomes true. That leads to an associated action as shown in the illustration 37.

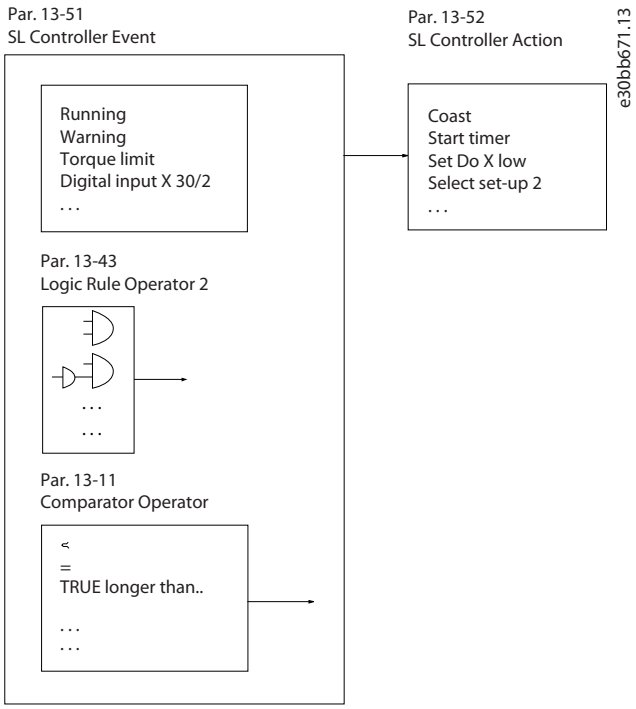

Illustration 37: Associated Action

Events and actions are each numbered and linked in pairs (states). This means that when event [0] is fulfilled (attains the value true), action [0] is executed. After this, the conditions of event [1] are evaluated and if evaluated true, action [1] is executed, and so on. Only 1 event is evaluated at any time. If an event is evaluated as false, nothing happens (in the SLC) during the current scan interval, and no other events are evaluated. When the SLC starts, it evaluates event [0] (and only event [0]) each scan interval. Only when event [0] is evaluated true, the SLC executes action [0] and starts evaluating event [1]. It is possible to program 1–20 events and actions.

When the last event/action has been executed, the sequence starts over again from event [0]/action [0]. See illustration 38 for an example with 3 events/actions:

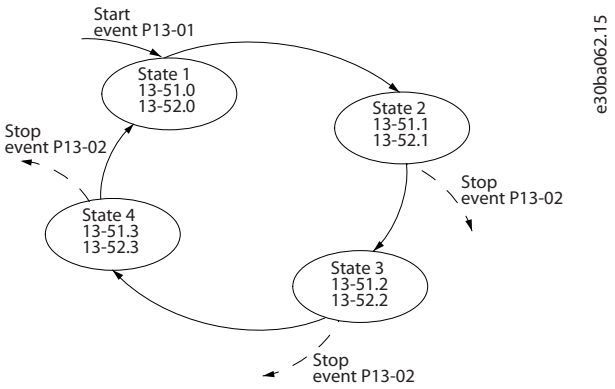

Illustration 38: Sequence with 4 Events/Actions

6.2.12.1 Comparators

Comparators are used for comparing continuous variables (for example, output frequency, output current, and analog input) to fixed preset values.

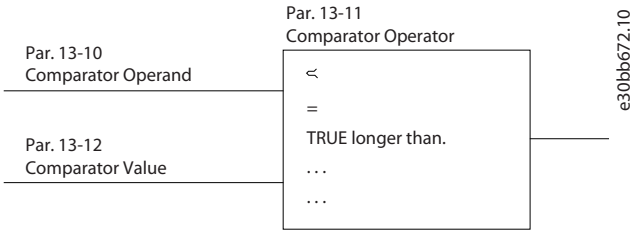

Illustration 39: Comparators

6.2.12.2 Logic Rules

Combine up to 3 boolean inputs (true/false inputs) from timers, comparators, digital inputs, status bits, and events using the logical operators and, or, and not.

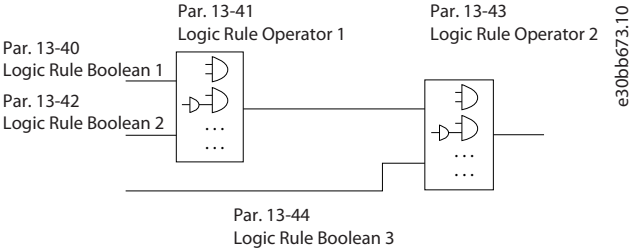

Illustration 40: Logic Rules

6.2.13 Safe Torque Off

To run STO, extra wiring for the drive is required. Refer to the VLT® Safe Torque Off Operating Guide for further information.

Liability conditions

The customer is responsible for ensuring that personnel know how to install and operate the Safe Torque Off function by:

- Reading and understanding the safety regulations concerning health, safety, and accident prevention.
- Understanding the generic and safety guidelines provided in the VLT® Safe Torque Off Operating Guide.
- Having a good knowledge of the generic and safety standards for the specific application.

6.3 Dynamic Braking Overview

Dynamic braking slows the motor using 1 of the following methods:

- AC brake:
  - The brake energy is distributed in the motor by changing the loss conditions in the motor (*parameter 2-10 Brake Function = [2] AC Brake*). The AC brake function cannot be used in applications with high cycling frequency since this situation overheats the motor.
- DC brake:
  - An overmodulated DC current added to the AC current works as an eddy current brake (*parameter 2-02 DC Braking Time ≠ 0 s*).
- Resistor brake:
  - A brake IGBT keeps the overvoltage under a certain threshold by directing the brake energy from the motor to the connected brake resistor (*parameter 2-10 Brake Function = [1] Resistor Brake*). For more information on selecting a brake resistor, see the VLT® Brake Resistor MCE 101 Design Guide.

For drives equipped with the brake option, a brake IGBT along with terminals 81(R-) and 82(R+) are included for connecting an external brake resistor. The function of the brake IGBT is to limit the voltage in the DC link whenever the maximum voltage limit is exceeded. It limits the voltage by switching the externally mounted resistor across the DC bus to remove excess DC voltage present on the bus capacitors.

External brake resistor placement has the advantages of selecting the resistor based on application need, dissipating the energy outside of the control panel, and protecting the drive from overheating if the brake resistor is overloaded. The brake IGBT gate signal originates on the control card and is delivered to the brake IGBT via the power card and gatedrive card. Also, the power and control cards monitor the brake IGBT for a short circuit. The power card also monitors the brake resistor for overloads.

External brake resistor placement has the advantages of selecting the resistor based on application need, dissipating the energy outside of the control panel, and protecting the drive from overheating if the brake resistor is overloaded.

6.4 Mechanical Holding Brake Overview

Dynamic braking is established by:

- Brake resistor:
  - A brake IGBT keeps the overvoltage under a certain threshold by directing the brake energy from the motor to the connected brake resistor (*parameter 2-10 Brake Function = [1] Resistor brake*).
- AC brake
  - The brake energy is distributed in the motor by charging the loss conditions in the motor. The AC brake function cannot be used in applications with high cycling frequency since this overheats the motor (*parameter 2-10 Brake Function = [2] AC brake*).
- DC brake
  - An overmodulated DC current added to the AC current works as an eddy current brake (*parameter 2-02 DC Braking Time* ≠ 0 s).

6.4.1 Open-loop Mechanical Brake Control

To control a mechanical brake, a relay output (relay 1 or relay 2) or a programmed digital output (terminal 27 or 29) is required. Normally, this output must be closed during periods when the drive is unable to hold the motor, for example, due to an excessive load. In *parameter 5-40 Function Relay*, *5-30 Terminal 27 Digital Output*, or *parameter 5-31 Terminal 29 Digital Output*, select *[32] Mechanical Brake Control* for applications with an electromechanic brake. When selecting *[32] Mechanical Brake Control*, the mechanical brake is closed from start-up until the output current is above the level selected in *parameter 2-20 Release Brake Current*.

During stop, the mechanical brake activates when the speed drops below the level specified in *parameter 2-21 Activate Brake Speed [RPM]*. If the drive enters an alarm condition, an overcurrent, or overvoltage situation, the mechanical brake immediately cuts in. This is also the case during STO.

NOTICE

Protection mode and trip delay features (*parameter 14-25 Trip Delay at Torque Limit* and *parameter 14-26 Trip Delay at Inverter Fault*) may delay the activation of the mechanical brake in an alarm condition.

- Disable these functions in hoisting applications.

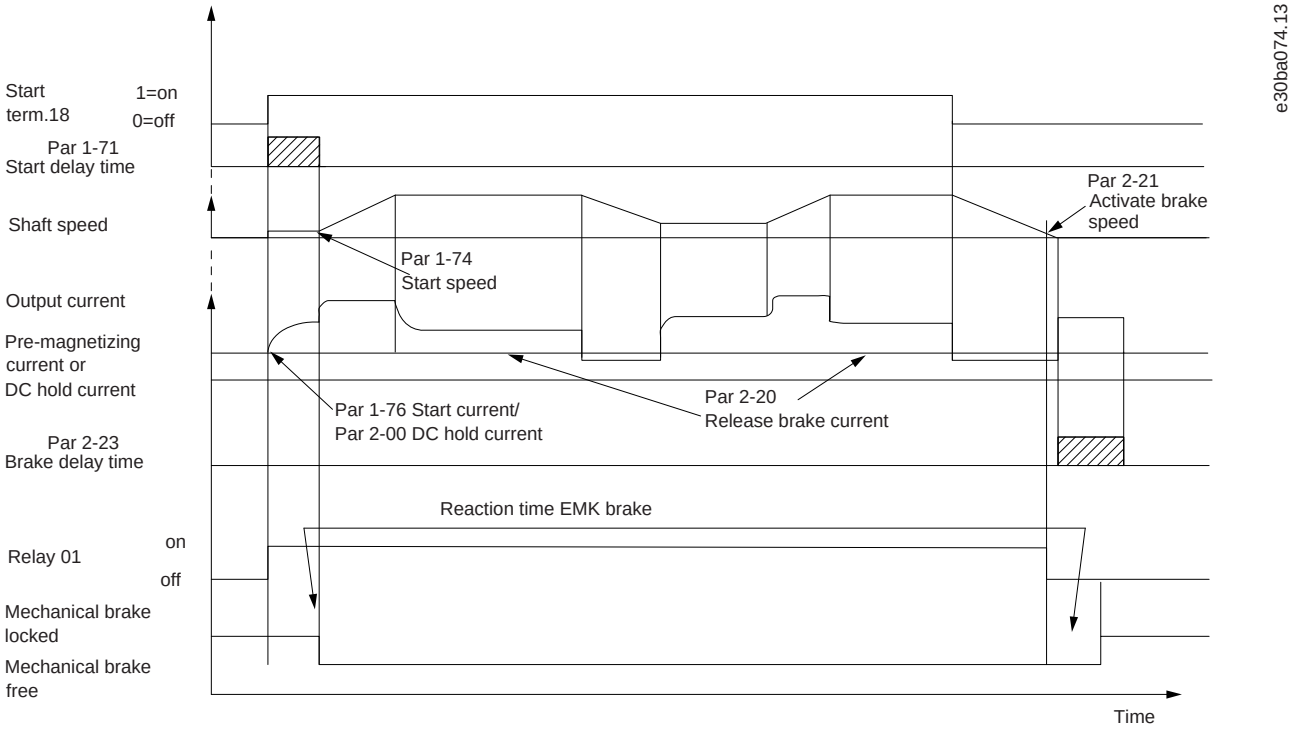

Illustration 41: Mechanical Brake

6.4.2 Closed-loop Mechanical Brake Control/Hoist Mechanical Brake

The hoist mechanical brake supports the following functions:

- 2 channels for mechanical brake feedback to offer further protection against unintended behavior resulting from a broken cable.
- Monitoring of mechanical brake feedback throughout the complete cycle. This helps protect the mechanical brake, especially if more drives are connected to the same shaft.
- No ramp up until feedback confirms that the mechanical brake is open.

Improved load control at stop

If *parameter 2-23 Activate Brake Delay* is set too short, *warning 22, Hoist Mech Brake* is activated and the torque is not allowed to ramp down.

- The transition when the motor takes over the load from the brake can be configured. *Parameter 2-28 Gain Boost Factor* can be increased to minimize the movement. For smooth transition, change the setting from the speed control to the position control during the change-over.
- Set *parameter 2-28 Gain Boost Factor* to 0 to enable position control during *parameter 2-25 Brake Release Time*. This enables *parameters 2-30* to *2-33*, which are PID parameters for the position control.

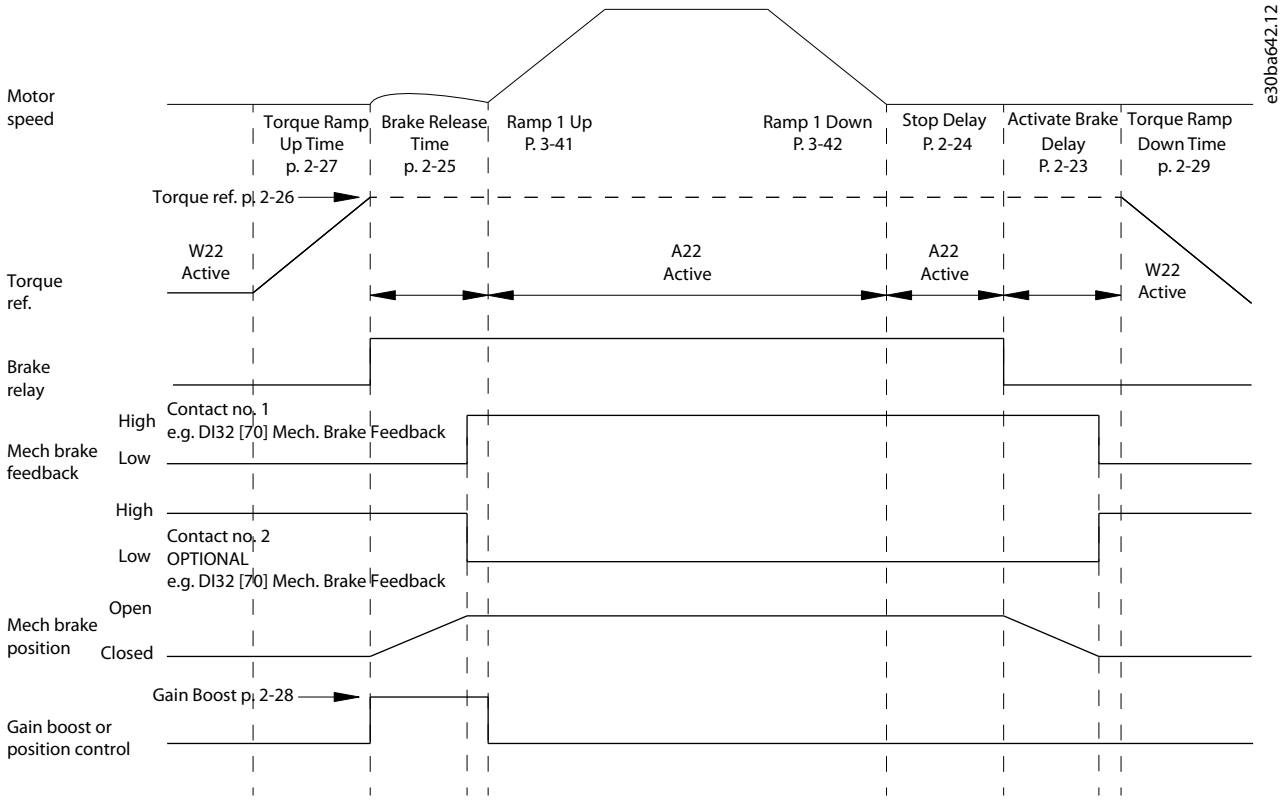

Illustration 42: Brake Release Sequence for Hoist Mechanical Brake Control

This brake control is available in flux with motor feedback only, available for asynchronous and non-salient PM motors.

Parameters 2-30 to *2-33* can be set up for smooth transition change from speed control to position control during *parameter 2-25 Brake Release Time*. The brake release time is the time when the load is transferred from the mechanical brake to the drive.

Parameters 2-30 to *2-33* are activated when *parameter 2-28 Gain Boost Factor* is set to 0.

NOTICE

- For an example of advanced mechanical brake control for hoisting applications, see the Applications Examples section.

6.5 Load Sharing Overview

Load sharing enables connection of multiple Danfoss VLT® drives over the same DC link with the following benefits:

- Energy savings:
  - A motor running in regenerative mode can supply drives that are running in motoring mode. Alternatively, the motor running in regenerative mode can supply any brake resistors used with the drives.
- Reduced need for spare parts:
  - Usually, only 1 brake resistor is required for the installation instead of a brake resistor for each drive.
- Power back-up:
  - If there was mains failure, all Danfoss VLT® drives can be supplied through the DC link from a back-up. The application can thus continue running or go through a controlled shutdown process.

6.5.1 Preconditions and Special Conditions

Before considering load sharing, ensure that the following preconditions are met:

- Equip the drives with load sharing terminals. Enclosure sizes A1–A5 and B3 have load sharing terminals by default.
- Enclosure sizes B, C, and F must be configured for load sharing when ordering. The standard load share selection in character 21 or the type code is D, but other selections are available. For more configuration options, see Drivecat. It is not possible to retrofit load sharing terminals on enclosure sizes B, C, and F.
- Enclosure sizes D and E must be configured for load sharing either when ordering or by using a retrofit kit. The standard load share selection in character 21 of the type code is D, but other options are available. For more configuration options, see the Drivecat.
- The drives considered for load sharing must be of the same product series.
- The drives must all have the same voltage rating, for example, use T5 with T5 only.
- Place the drives physically close to each other to allow the wiring between to be as short as possible (maximum 25 m (82 ft)). Build the wiring symmetrically around the drives with the highest power. Moreover, run the 2 wires closely together and, if possible, twisted.
- When adding a brake resistor in a load sharing configuration, equip all drives with a brake chopper.
- A brake chopper is specified in the type code when ordering and cannot be retrofitted. The standard selection in character 18 of the type code is B. For enclosure size A1, selection U, brake chopper + STO, is also a possibility.

NOTICE

Continuously monitor the *Drive ready* signal of the drives. The *Drive ready* signal impacts the overall application control.

NOTICE

MISSING PHASE AND OVERCURRENT PROTECTION REQURIED

Drives can have their rectifier overloaded even though the DC link does not show a high level of voltage ripple. Therefore, the mains supply must be equipped with missing phase and overcurrent protection.

NOTICE

UNINTEDED WARNINGS OR REDUCED PERFORMANCE

In a load sharing application, the AC-brake function does not work as expected. The function checks for regenerative power, but in a load sharing application, the regenerative power can come from another drive.

- Turn off the AC-brake function in load sharing applications (*parameter 2-10 Brake Function*). Example: A drive without a brake is combined with a drive with brake. When the drive with a brake is braked, the other drive receives an overcurrent warning. Performance is not affected.

NOTICE

The start-up time of the drive may be slightly longer than normal.

NOTICE

According to the EMC Directive, a system is defined as a combination of several types of equipment, finished products, and/or components combined, designed and/or put together by the same person (system manufacturer) intended to be placed on the market for distribution as a single functional unit for an end user and intended to be installed and operated together to perform a specific task. The EMC directive applies to products/systems and installations, but in case the installation is built up of CE marked products/systems the installation can also be considered compliant with the EMC directive. Installations shall not be CE marked.

According to the EMC Directive, Danfoss Drives as a manufacturer of product/systems is responsible for obtaining the essential requirements of the EMC directive and attaching the CE mark. For systems involving load sharing and other DC terminals, Danfoss Drives can only ensure compliance to EMC Directive when end users connect combinations of Danfoss Drives products as described in our technical documentation.

If any third-party products are connected to the load share or other DC terminals on the AC drives, Danfoss Drives cannot guarantee that the EMC requirements are fulfilled.

6.5.2 Combinations of Enclosure Sizes

The concept for limiting inrush current in the DC-link capacitors is not the same for all enclosure sizes. Therefore, options for combining different enclosure sizes in load sharing applications are limited.

NOTICE

RISK OF DRIVE FAILURE

Combining enclosure sizes that have different inrush control principles may lead to drive failure.

- Ensure that the applied inrush control principles are compatible before combining drives in a load sharing application.

Table 12: Inrush Control Principles for Individual Enclosure Sizes

Enclosure size	Principle
A	DC inrush self-limited
B	
C	AC inrush thyristor limited
D	AC inrush resistor limited
E	
F	

The following enclosure size combinations are possible in load sharing applications:

- A and B enclosures can be combined with other A or B enclosures.
- C, D, E, and F enclosures can be combined with other C, D, E, or F enclosures. However, C enclosures can only be combined with F enclosures under the following circumstances:
  - All drives are connected to mains or
  - only the F enclosure is connected to mains.
- It is not possible to combine F and C enclosures if only the C enclosure is connected to mains.
- If the A/B enclosure drive is not connected to mains, A and B enclosures can be combined with C, D, E, or F enclosures.

NOTICE

RISK OF DRIVE FAILURE

Combining A or B enclosures connected to mains with C, D, E, or F enclosures causes overload of the rectifier in the A and B enclosures during inrush and normal load conditions.

- Ensure that A and B enclosures are not connected to mains when combining them with C, D, E, or F enclosures.

To have the correct design of load sharing circuit, consult the application note Load Sharing for more details.

6.6 Regen Overview

Regen typically occurs in applications with continuous braking such as cranes/hoists, downhill conveyors, and centrifuges where energy is pulled out of a decelerated motor.

- The load drives the motor when the drive is operated at a constant output frequency. This is referred to as an overhauling load.
- During deceleration, if the inertia of the load is high and the deceleration time of the drive is set to a short value.

As standard, the drive cannot regenerate energy back to the input. The drive can use the internal brake chopper, which allows the excess energy to be dissipated in the form of heat within the external connected brake resistor.

Drives equipped with Active Front End (AFE) enables removal of excess energy using 1 of the following options:

- Brake chopper allows the excess energy to be dissipated in the form of heat within the brake resistor coils.
- Regen terminals allow a 3rd-party Regen to be connected to the drive, allowing the excess energy to be returned to the power grid.

Returning excess energy back to the power grid is the most efficient use of regenerated energy in applications using continuous braking.

NOTICE

According to the EMC Directive, a system is defined as a combination of several types of equipment, finished products, and/or components combined, designed and/or put together by the same person (system manufacturer) intended to be placed on the market for distribution as a single functional unit for an end-user and intended to be installed and operated together to perform a specific task. The EMC directive applies to products/systems and installations, but in case the installation is built up of CE marked products/systems the installation can also be considered compliant with the EMC directive. Installations shall not be CE marked.

According to the EMC Directive, Danfoss Drives as a manufacturer of product/systems is responsible for obtaining the essential requirements of the EMC directive and attaching the CE mark. For systems involving load sharing and other DC terminals, Danfoss Drives can only ensure compliance to EMC Directive when end-users connect combinations of Danfoss Drives products as described in our technical documentation.

If any third-party products are connected to the load share or other DC terminals on the AC drives, Danfoss Drives cannot guarantee that the EMC requirements are fulfilled.

7 Options and Accessories Overview

7.1 Introduction

Danfoss offers an extensive range of options and accessories.

This chapter provides an overview of the different hardware options and accessories for the VLT® FC drive series:

- Fieldbus options
- Functional extensions
- Programmable controllers
- Power options
- Kits and accessories

7.2 VLT® FC Series Options Concept

Options are used to add extra features to the drive. That allows tailoring the drive to the specific need and application.

The drives have 4 option slots (A, B, C, and D).

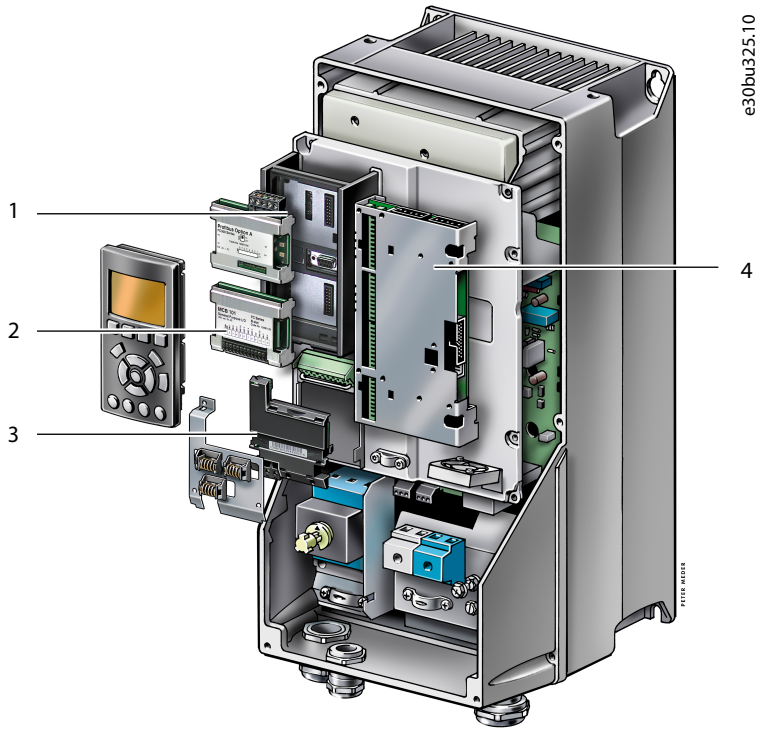

1	A option	**2**	B option
3	D option	**4**	C option

Illustration 43: Option Slots on a VLT® FC Series Drive (Example Compact Enclosure)

The A-slot options are typically communication options, for example, for adding fieldbus functionality.

The B-slot options typically host functional extension options.

The C-slot options host special function options, e.g for motion control.

The D-slot option is used for an external power supply.

The options are slot-specific. So an A-option does only fit in an A-option slot.

Some options are drive-specific, as they require an application-specific operating system in the drive.

Some additional functionalities are not implemented via hardware options, but via specific software options, for example IMC (Integrated Motion Control), which is a software option included in a separate version of the operating system.

For a more detailed overview of available options, download the VLT® Drives FC Series Options Portfolio from www.danfoss.com.

7.3 VLT® Fieldbus Options

This topic gives an overview of currently available option cards related to fieldbus communication for the VLT® FC AC drive series. The fieldbus solutions brochure can be downloaded from www.danfoss.com in the Options and Accessories section.

More detailed descriptions of the fieldbus option cards can be found in the Installation Guides, Programming Guides, and Operating Guides for the individual options. These manuals can be downloaded from the Danfoss documentation download page for VLT® AutomationDrive FC 301/FC 302.

Table 13: Fieldbus Options

Option name	Slot	FC 102	FC 103	FC 202	FC 301	FC 302
VLT® PROFIBUS DP MCA 101	A	x	x	x	x	x
VLT® DeviceNet MCA 104	A	x	–	x	x	x
VLT® CANopen MCA 105	A	–	–	–	x	x
VLT® AK-LonWorks MCA 107 for ADAP-Kool®	A	–	x	–	–	–
VLT® LonWorks MCA 108	A	x	–	–	–	–
VLT® BACNet MCA 109	A	x	x	–	–	–
VLT® PROFIBUS Converter MCA 113 (VLT® 3000 to VLT® FC 302)	A	–	–	–	–	x
VLT® PROFIBUS Converter MCA 114 (VLT® 5000 to VLT® FC 302)	A	–	–	–	–	x
VLT® PROFINET MCA 120	A	x	x	x	x	x
VLT® EtherNet/IP MCA 121	A	x	–	x	x	x
VLT® Modbus TCP MCA 122	A	x	–	x	x	x
VLT® POWERLINK MCA 123	A	–	–	–	x	x
VLT® EtherCAT MCA 124	A	–	–	–	x	x
VLT® BACNet/IP MCA 125	A	x	–	–	–	–
VLT® DeviceNet Converter MCA 194	A	–	–	–	–	x

7.4 VLT® Functional Extensions

This topic gives an overview of currently available option cards for functional extension.

More detailed descriptions of the functional extension option cards can be found in the Installation Guides, Programming Guides, and Operating Guides for the individual options. These manuals can be downloaded from www.danfoss.com in the VLT® AutomationDrive FC 301/FC 302 section.

Table 14: Functional Extensions

Option name	Slot	FC 102	FC 103	FC 202	FC 301	FC 302
VLT® General Purpose I/O Option MCB 101	B	x	x	x	x	x
VLT® Encoder Option MCB 102	B	–	–	–	x	x
VLT® Resolver Input MCB 103	B	–	–	–	x	x
VLT® Relay Card MCB 105	B	x	x	x	x	x
VLT® 24 V DC Supply Option MCB 107	D	x	x	x	–	x
VLT® Safe PLC Interface Option MCB 108	B	–	–	–	–	x
VLT® Analog I/O MCB 109 (incl. RTC backup)	B	x	x	x	–	–
VLT® PTC Thermistor Card MCB 112	B	x	–	x	x	x
VLT® Extended Relay Card MCB 113	C	–	–	–	–	x
VLT® Sensor Input MCB 114	B	x	–	x	x	x
VLT® Programmable I/O MCB 115	B	–	–	–	x	x
VLT® Real-time Clock MCB 117	D	x	x	x	x	x
VLT® Safety Option MCB 150 (TTL)	B	–	–	–	–	x
VLT® Safety Option MCB 151 (HTL)	B	–	–	–	–	x
VLT® Safety Option MCB 152 (PROFIsafe)	B	–	–	–	–	x
VLT® Sensorless Safety MCB 159 [(1)]	–	–	–	–	–	x

[1] *MCB 159 is factory-mounted and must be ordered with VLT® Safety Option MCB 151.*

7.5 VLT® Programmable Controllers

Table 15: VLT® Programmable Controllers

Option name		FC 102	FC 103	FC 202	FC 301	FC 302
VLT® Extended Cascade Controller MCO 101	B	–	–	x	–	–
VLT® Advanced Cascade Controller MCO 102	C	–	–	x	–	–
VLT® Motion Control Option MCO 305	C	–	–	–	x	x
VLT® Synchronizing Controller MCO 350	C	–	–	–	–	x
VLT® Position Controller MCO 351	C	–	–	–	–	x

Option name		FC 102	FC 103	FC 202	FC 301	FC 302
Integrated Motion Controller IMC S067 (software option)	–	–	–	–	–	x

7.6 VLT® Power Options

7.6.1 VLT® Harmonic Filters

Table 16: VLT® Harmonic Filters

Option name	FC 102	FC 103	FC 202	FC 301	FC 302
VLT® Advanced Harmonic Filter AHF 005	x	x	x	x	x
VLT® Advanced Harmonic Filter AHF 010	x	x	x	x	x

The VLT® Advanced Harmonic Filters AHF 005 & AHF 010 are not comparable with traditional harmonic trap filters. The Danfoss VLT® harmonic filters have been specially designed to match the Danfoss VLT® drives.

By connecting the AHF 005 or AHF 010 in front of a Danfoss VLT® drive, the total harmonic current distortion generated back to the mains is reduced to 5% (AHF 005) and 10% (AHF 010).

For order numbers and more information on harmonic mitigation, refer to 10.18 Harmonics Overview, 12.2.11 Ordering of Harmonic Filters, and for more detailed information the VLT® Advanced Harmonic Filters AHF 005/AHF 010 Design Guide.

7.6.2 VLT® Sine-wave Filters

Table 17: VLT® Sine-wave Filters

Option name	FC 102	FC 103	FC 202	FC 301	FC 302
VLT® Sine-wave Filter MCC 101	x	x	x	x	x

When a drive controls a motor, resonance noise is heard from the motor. This noise, which is the result of the motor design, occurs every time an inverter switch in the drive is activated. The frequency of the resonance noise thus corresponds to the switching frequency of the drive.

Danfoss supplies a sine-wave filter to dampen the acoustic motor noise. The filter reduces the ramp-up time of the voltage, the peak load voltage (U_{PEAK}), and the ripple current (ΔI) to the motor, which means that current and voltage become almost sinusoidal. The acoustic motor noise is reduced to a minimum.

The ripple current in the sine-wave filter coils also causes some noise. Solve the problem by integrating the filter in a cabinet or enclosure.

For order numbers and more information on how to dimension sine-wave filters, refer to 12.2.12 Order Numbers for VLT® Sine-wave Filters MCC 101, and for more detailed information the VLT® FC Series Output Filter Design Guide.

7.6.3 VLT® dU/dt Filters

Table 18: VLT® dU/dt Filters

Option name	FC 102	FC 103	FC 202	FC 301	FC 302
VLT® Sine-wave Filter MCC 102	x	x	x	x	x

Danfoss supplies dU/dt filters. dU/dt filters are differential mode, low-pass filters that reduce motor terminal phase-to-phase peak voltages and reduce the rise time to a level that lowers the stress on the insulation at the motor windings. This is especially an issue with short motor cables.

Compared to the sine-wave filters, the dU/dt filters have a cut-off frequency above the switching frequency.

For order numbers and more information on how to dimension dU/dt filters, refer to 10.15 dU/dt Conditions, 12.2.13 Order Numbers for VLT® dU/dt Filters MCC 102, and for more detailed information the VLT® FC Series Output Filter Design Guide.

7.6.4 VLT® Common-mode Filters

Table 19: VLT® Common Mode Filters

Option name	FC 102	FC 103	FC 202	FC 301	FC 302
VLT® Common Mode Filter MCC 105	x	x	x	x	x

High-frequency common-mode cores (HF-CM cores) reduce electromagnetic interference and eliminate bearing damage by electrical discharge. They are special nanocrystalline magnetic cores that have superior filtering performance compared to regular ferrite cores. The HF-CM core acts like a common-mode inductor between phases and ground.

Installed around the 3 motor phases (U, V, W), the common-mode filters reduce high-frequency common-mode currents. As a result, high-frequency electromagnetic interference from the motor cable is reduced.

For ordering numbers, refer to the VLT® FC Series Output Filter Design Guide.

7.6.5 VLT® Brake Resistors

Table 20: VLT® Brake Resistors

Option name	FC 102	FC 103	FC 202	FC 301	FC 302
VLT® Brake Resistor MCE 101	x	–	x	x	x

In applications where the motor is used as a brake, energy is generated in the motor and sent back into the drive. If the energy cannot be transported back to the motor, it increases the voltage in the drive DC line. In applications with frequent braking and/or high inertia loads, this increase can lead to an overvoltage trip in the drive and, finally, a shutdown.

Brake resistors are used to dissipate the excess energy resulting from the regenerative braking.

The resistor is released based on its ohmic value, its power dissipation rate, and its physical size. Danfoss offers a wide variety of different resistors that are specially designed for Danfoss drives.

For basic information on brake resistor selection, see 10.10.1 Selection of Brake Resistor.

For order numbers and more information on how to dimension brake resistors, refer to 12.2.9 Ordering of VLT® Brake Resistors MCE 101, and for more detailed information the VLT® Brake Resistor MCE 101 Design Guide.

7.6.6 VLT® Line Reactors

Table 21: VLT® Line Reactors

Option name	FC 102	FC 103	FC 202	FC 301	FC 302
VLT® Line Reactor MCC 103	x	–	x	x	x

See 10.18.7 Line Reactors for details on using line reactors in load sharing applications.

7.7 Kits and Accessories

7.7.1 Panel Through Mounting Kits for VLT® FC Series Enclosure Sizes A, B, and C

The panel through mounting kit can be used for cooling the heat sink via an external air stream, or where there is a wish to use a separate air duct. The electronics are sealed from the external air by use of the mounting flange and sealing gasket. This way the electronics are hosued within the control panel, while the heat sink protrudes through the panel.

There are specific kits available for enclosure sizes A5, B1, B2, C1, C2. See 12.2.6 Order Numbers for Miscellaneous Hardware.

The backplate (must be purchased separately) is used if an air duct is not available. Mounted in a duct construction, the built-in fan can be removed and the cooling air provided by an external fan.

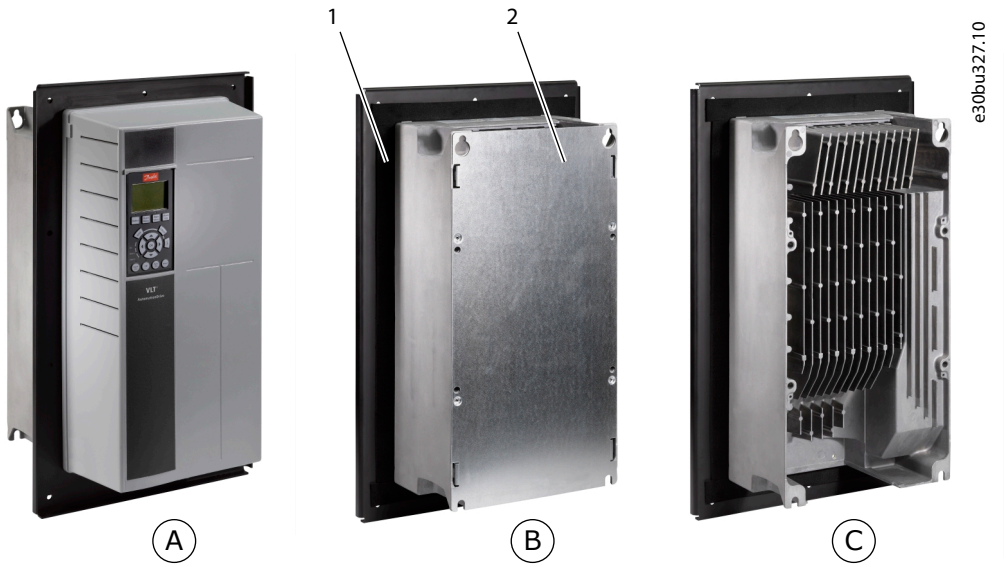

A	Drive mounted with a panel through mounting kit.	**B**	Panel through kit with backplate for use with internal fan.
C	Panel through kit without backplate for installation in air duct.	**1**	Mounting flange with sealing gasket.

2 Backplate.	

Illustration 44: Panel Though Mounting Kit on VLT® AutomationDrive FC 302

7.7.2 IP21/NEMA Type 1 Enclosure Kits for VLT® FC Series Enclosure Sizes A, B, and C

IP20/IP4X top/Nema Type 1 is an optional enclosure element available for IP20 compact units. If the enclosure kit is used, an IP20 unit is upgraded to comply with enclosure IP21/4X top/Nema Type 1. The IP4X top can be applied to all standard IP20 enclosure variants.

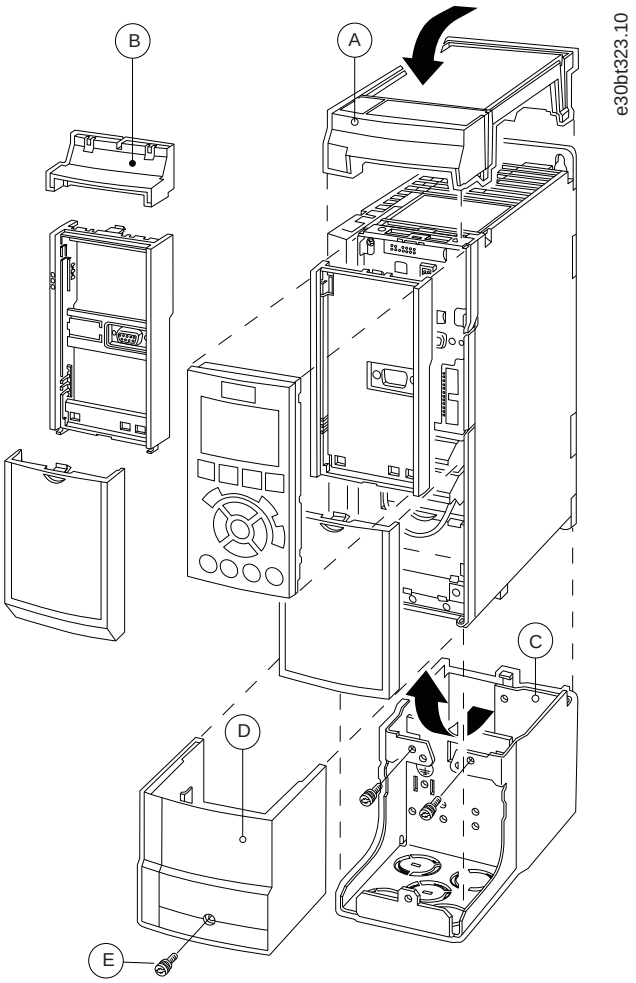

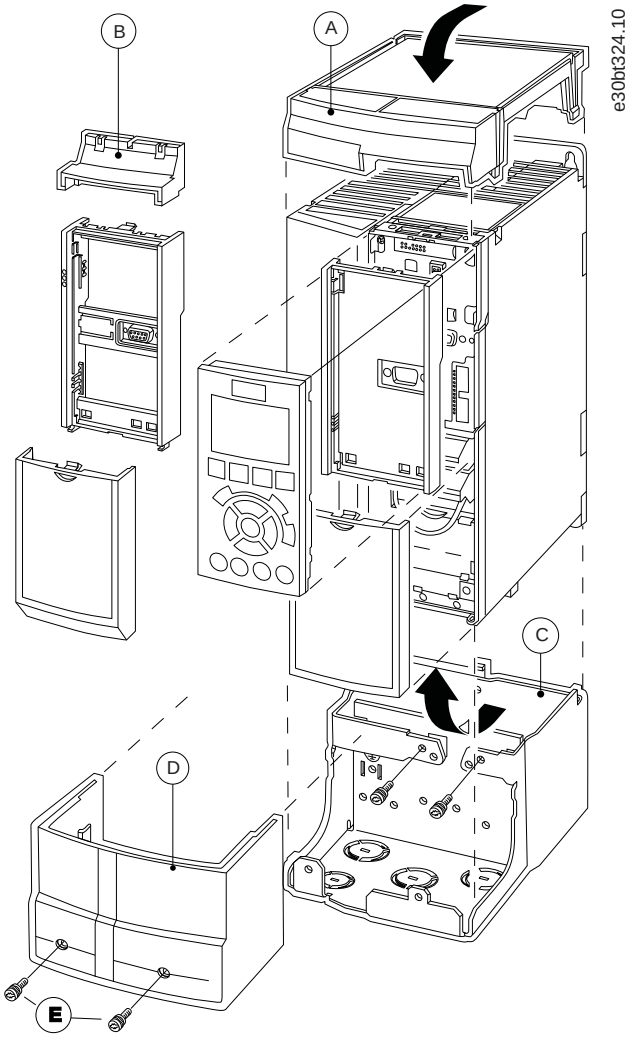

A Top cover	**B** Brim
C Base part	**D** Base cover
E Screw(s)	

Illustration 45: IP21/Nema Type 1 Kit on A2 Enclosure and A3 Enclosure

Place the top cover as shown. If an A or B option is used, fit the brim to cover the top inlet. Place the base part C at the bottom of the drive and use the clamps from the accessory bag to correctly fasten the cables.

Holes for cable glands:

- Enclosure size A2: 2x M25 and 3xM32.
- Enclosure size A3: 3xM25 and 3xM32.

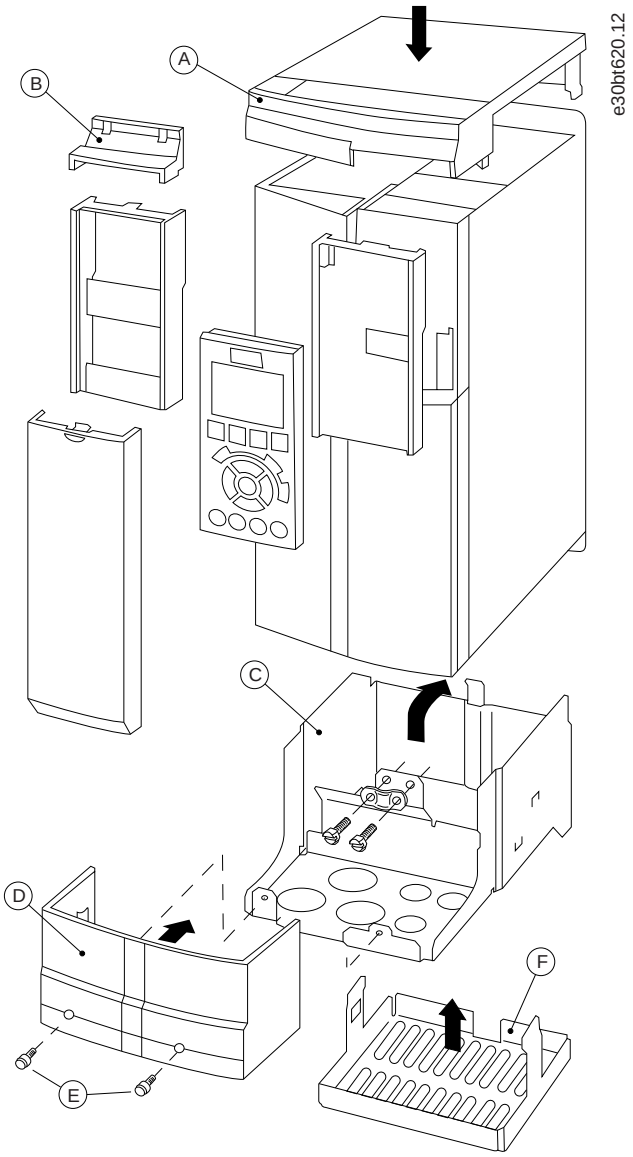

A Top cover	**B** Brim
C Base part	**D** Base cover
E Screw(s)	**F** Fan cover

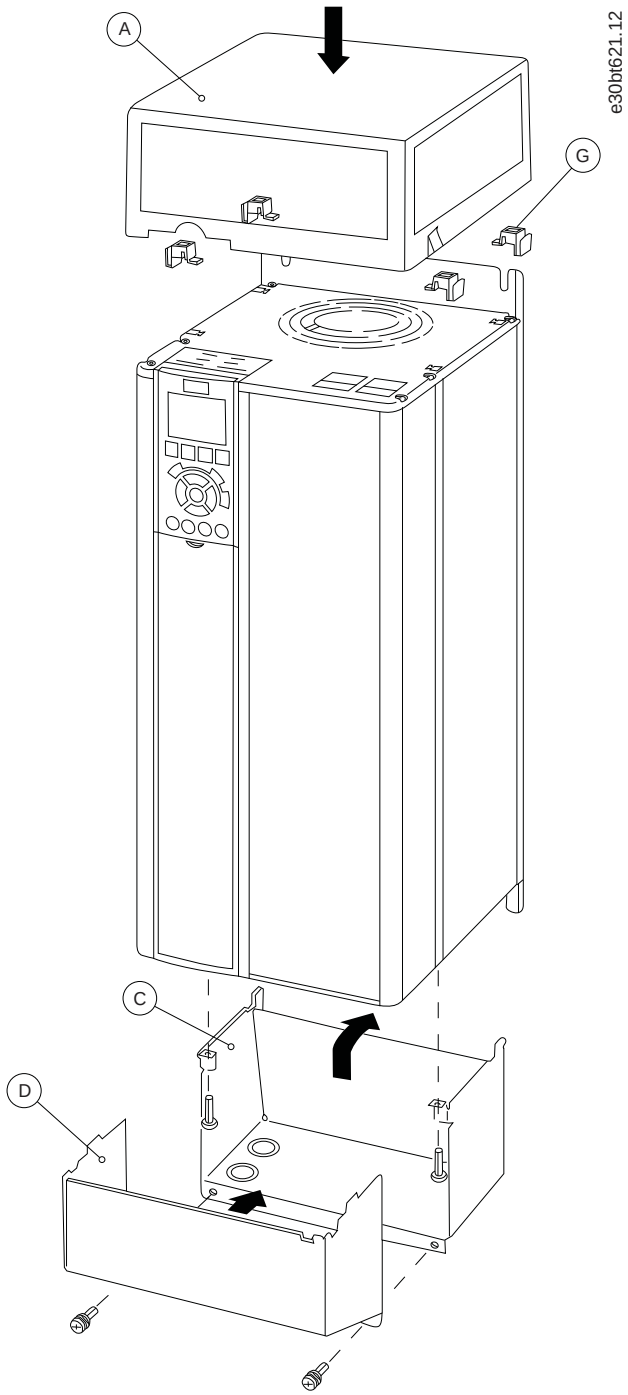

A	Top cover	**C**	Base part
D	Base cover	**G**	Top clip

Illustration 46: IP21/Nema Type 1 Kit on B3 Enclosure (Upper) and B4/C3/C4 Enclosure (Lower)

When option module A and/or option module B is/are used, fit the brim (B) to the top cover (A).

NOTICE

Side-by-side installation is not possible when using the IP21/IP4X/Nema Type 1 Enclosure Kit.

Table 22: Enclosure Dimensions with installed IP21/Nema Type 1 Kit

Enclosure size	Height A [mm (in)]	Width B [mm (in)]	Depth C [1] [mm (in)]
A2	372 (14.6)	90 (3.5)	205 (8.1)
A3	372 (14.6)	130 (5.1)	205 (8.1)
B3	475 (18.7)	165 (6.5)	249 (9.8)
B4	670 (26.4)	255 (10.1)	246 (9.7)
C3	755 (29.7)	329 (13.0)	337 (13.3)
C4	950 (37.4)	391 (15.4)	337 (13.3)

[1] *If an A and/or B option is used, the depth increases.*

7.7.3 Mounting Brackets for VLT® FC Series Enclosure Sizes A5, B1, B2, C1, and C2

The kits contain an upper and a lower bracket for the respective enclosure size.

Table 23: Mounting Brackets, Dimensions

Enclosure size	Protection Rating	A [mm (in)]	B [mm (in)]
A5	IP55/66	480 (18.9)	495 (19.5)
B1	IP21/55/66	535 (21.1)	550 (21.7)
B2	IP21/55/66	705 (27.8)	720 (28.4)
C1	IP21/55/66	730 (28.7)	745 (29.3)
C2	IP21/55/66	820 (32.3)	835 (32.9)

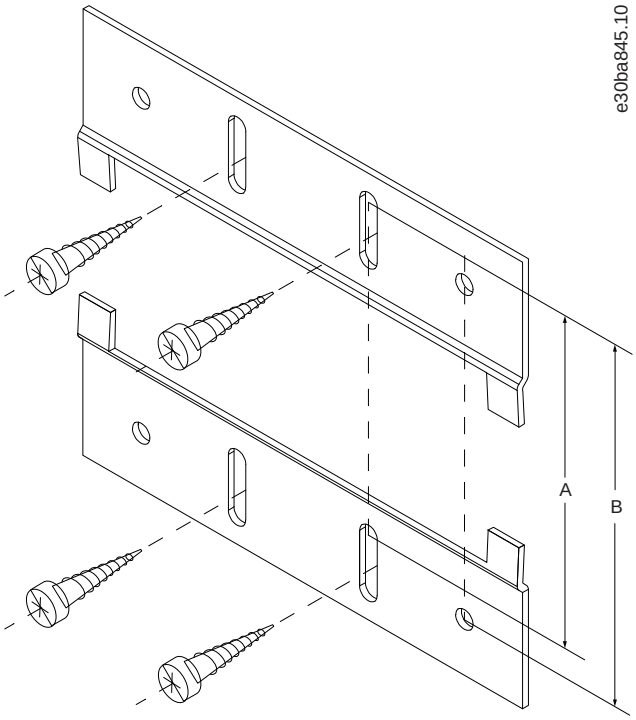
e30ba845.10
A
B

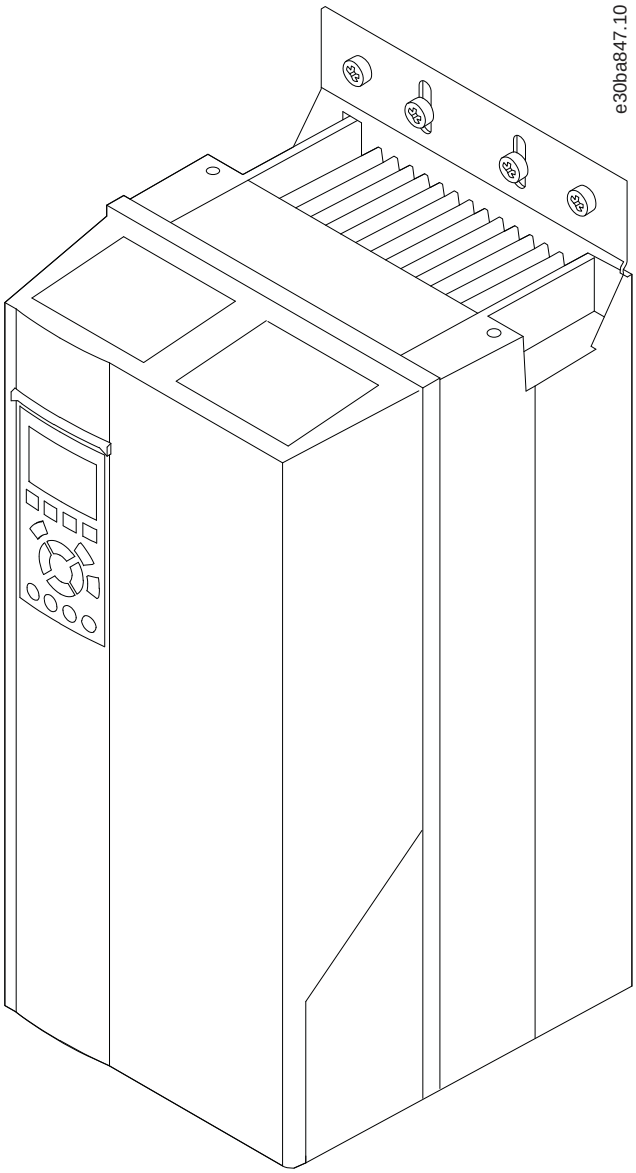

Illustration 47: Mounting Brackets for VLT® FC Series Enclosure Sizes A5, B1, B2, C2 and C2

7.7.4 Remote Mounting Kits for LCP

3 different remote mounting kits are available for the VLT® FC Series:

- Remote mounting kit for LCP with cover for outdoor mounting.
- Remote mounting kit with graphical LCP.
- Remote mounting kit with numerical LCP.

7.7.4.1 Remote Mounting Kit for LCP 102 and LCP 103 with Cover for Outdoor Mounting

The kit allows the LCP to be mounted apart from the drive, for example, in a wall or panel. The LCP mounting kit provides the following features:

- Simple mounting, only one 24 mm bore required for mounting.
- IP54 protection rating of the LCP mounting.
- Protecting LCP from direct sunlight.
- Possibility to lock the LCP cover to prevent unauthorized access.
- LCP cover locking in an open position, for example, for commissioning.
- Indicators for alarms and warnings are visible through the cover.
- Can be mounted on a wall from 0.1–90 mm thickness.

The kit contains the following parts (see 12.2.7 Order Numbers for Local Control Panel Options):

- LCP cables with 2 M12 connectors (90° male connector and straight female connector).
- Cable to the LCP.
- Blind cover with M12 female connector.
- Base plate with D-sub connector and M12 male connector.
- Two gaskets and 1 nut for the D-sub connector.
- Intermediate cover with the front cover.
- Disassembly tool.

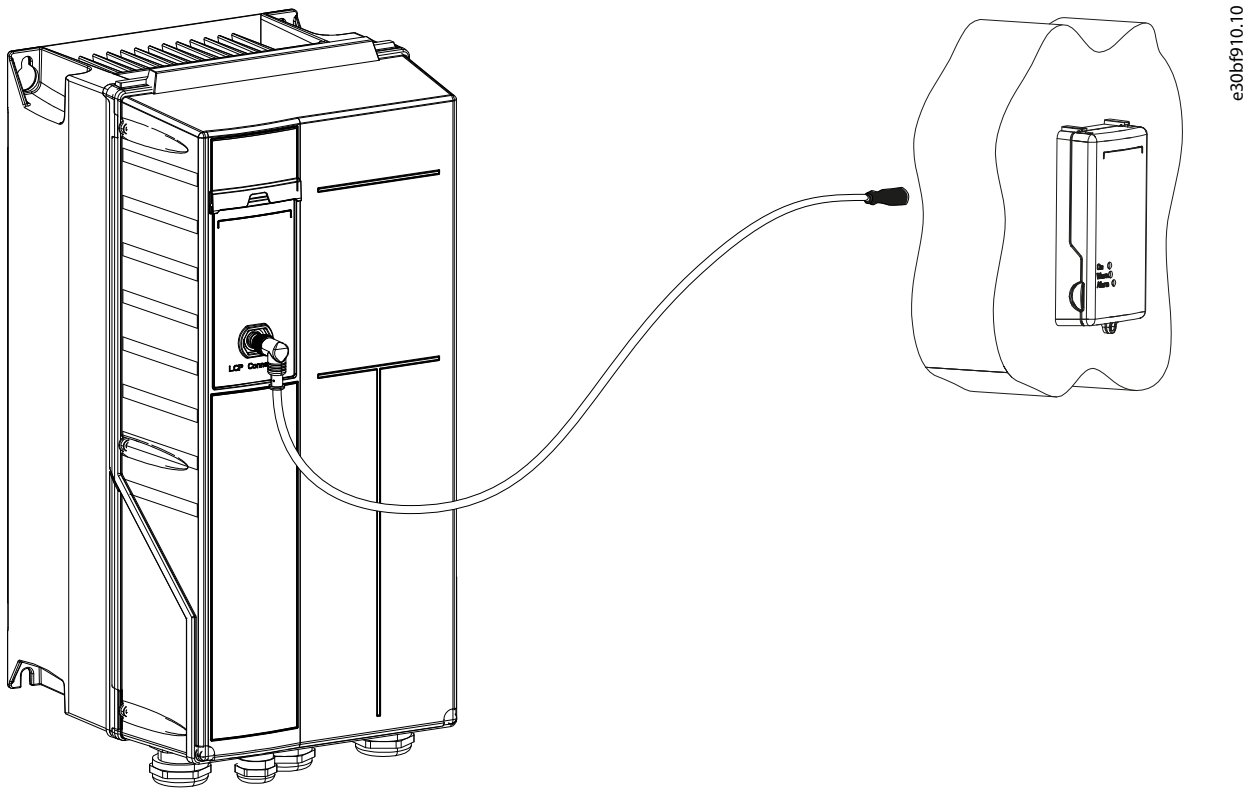

Illustration 48: Remote Connection of the LCP

7.7.4.2 Panel Mounting Kit for LCP 102, LCP 101, and LCP 103

The kit allows the LCP to move the LCP to the front of a cabinet.

The kit contains the following parts:

- Optional: Graphical LCP 102, numerical LCP 101, or Wireless Control Panel LCP 103.
- 3 m (10 ft) cable to the LCP.
- Gasket.
- Fasteners.

For order number, see: 12.2.7 Order Numbers for Local Control Panel Options.

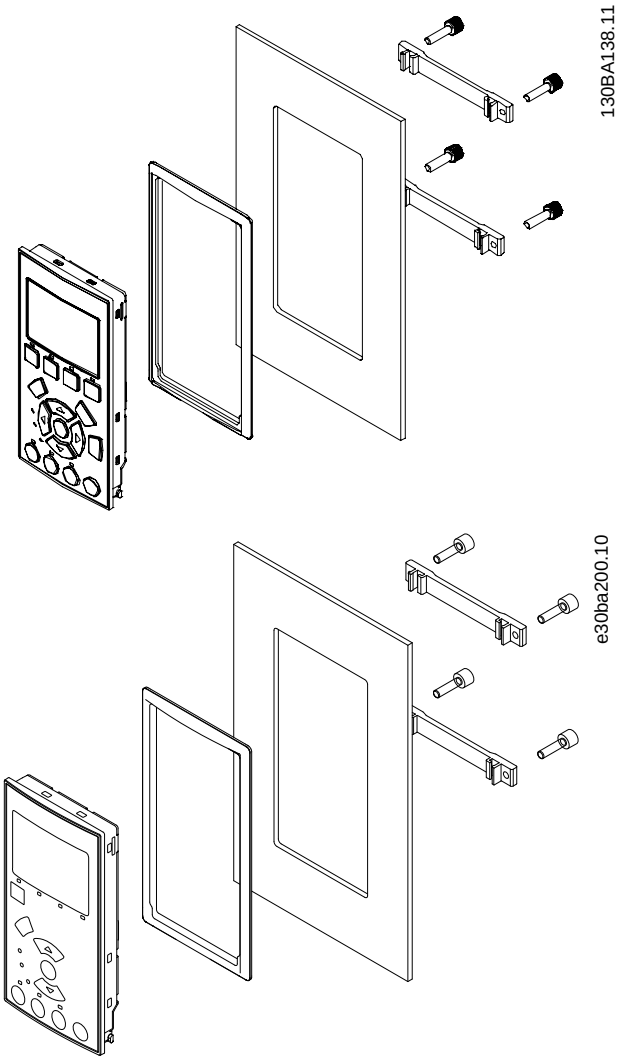

Illustration 49: Panel Mounting Kit for LCP 102, LCP 101, and LCP 103

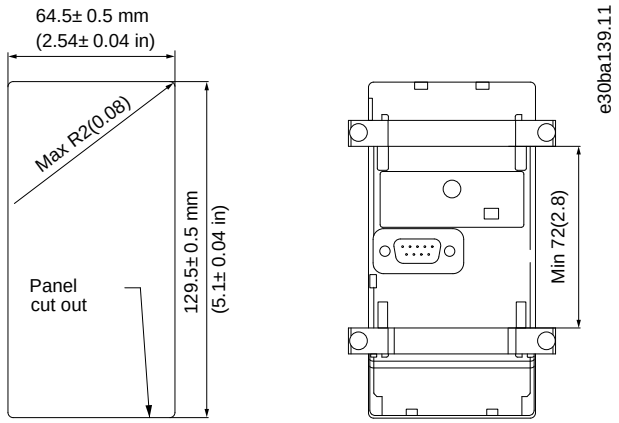

Illustration 50: Panel Mounting Kit Dimensions

7.7.5 VLT® Wireless Communication Panel LCP 103 and MyDrive® Connect

The VLT® Wireless Communication Panel LCP 103 communicates with MyDrive® Connect – an app which can be downloaded to iOS- and Android-based smart devices.

MyDrive® Connect offers full access to the drive making it easier to perform commissioning, operation, monitoring and maintenance tasks. Utilizing the active point-to-point wireless connection, maintenance personnel can receive real-time error messages via the app to ensure a quick response to potential issues and reduce downtime.

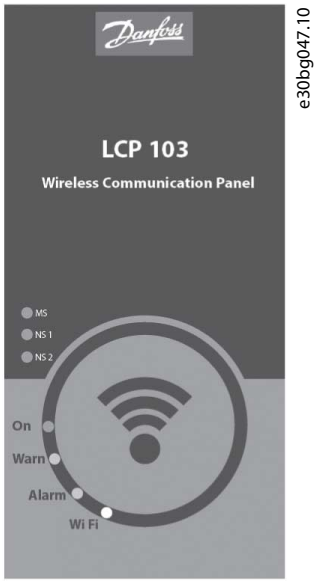

Illustration 51: VLT® Wireless Communication Panel LCP 103

8 Specifications

8.1 Enclosure Size by Power Rating

The VLT® AutomationDrive FC 301/FC 302 is available in several enclosure sizes depending on the power size and enclosure rating protection.

Table 24: Enclosure Power Ratings, 200–240 V AC

kW [1]	hp	Available enclosure sizes			
		IP20/Chassis	IP21/Type 1	IP55/Type 12	IP66/Type 4X
0.25	0.34	A1/A2	A1/A2	A4/A5	A4/A5
0.37	0.50	A1/A2	A1/A2	A4/A5	A4/A5
0.55	0.75	A1/A2	A1/A2	A4/A5	A4/A5
0.75	1.0	A1/A2	A1/A2	A4/A5	A4/A5
1.1	1.5	A1/A2	A1/A2	A4/A5	A4/A5
1.5	2.0	A1/A2	A1/A2	A4/A5	A4/A5
2.2	3.0	A2	A2	A4/A5	A4/A5
3.0	4.0	A3	A3	A5	A5
3.7	5.0	A3	A3	A5	A5
5.5	7.5	B3	B1	B1	B1
7.5	10	B3	B1	B1	B1
11	15	B4	B2	B2	B2
15	20	B4	C1	C1	C1
18	25	C3	C1	C1	C1
22	30	C3	C1	C1	C1
30	40	C4	C2	C2	C2
37	50	C4	C2	C2	C2

[1] *All power ratings are taken at high overload.*

Table 25: Enclosure Power Ratings, 380–480 V AC

kW [1]	hp	Available enclosure sizes			
		IP20/Chassis	IP21/Type 1	IP55/Type 12	IP66/Type 4X
0.37	0.50	A1/A2	A1/A2	A4/A5	A4/A5
0.55	0.75	A1/A2	A1/A2	A4/A5	A4/A5
0.75	1.0	A1/A2	A1/A2	A4/A5	A4/A5
1.1	1.5	A1/A2	A1/A2	A4/A5	A4/A5
1.5	2.0	A1/A2	A1/A2	A4/A5	A4/A5
2.2	3.0	A2	A2	A4/A5	A4/A5
3.0	4.0	A2	A2	A4/A5	A4/A5

kW [1]	hp	Available enclosure sizes			
4.0	5.0	A2	A2	A4/A5	A4/A5
5.5	7.5	A3	A3	A5	A5
7.5	10	A3	A3	A5	A5
11	15	B3	B1	B1	B1
15	20	B3	B1	B1	B1
18	25	B4	B2	B2	B2
22	30	B4	B2	B2	B2
30	40	B4	C1	C1	C1
37	50	C3	C1	C1	C1
45	60	C3	C1	C1	C1
55	75	C4	C2	C2	C2
75	100	C4	C2	C2	C2

[1] *All power ratings are taken at high overload.*

Table 26: Enclosure Power Ratings, 525–600 V AC

kW [1]	hp	Available enclosure sizes			
		IP20/Chassis	**IP21/Type 1**	**IP55/Type 12**	**IP66/Type 4X**
0.75	1.0	A3	A3	A5	A5
1.1	1.5	A3	A3	A5	A5
1.5	2.0	A3	A3	A5	A5
2.2	3.0	A3	A3	A5	A5
3.0	4.0	A3	A3	A5	A5
4.0	5.0	A3	A3	A5	A5
5.5	7.5	A3	A3	A5	A5
7.5	10	A3	A3	A5	A5
11	15	B3	B1	B1	B1
15	20	B3	B1	B1	B1
18	25	B4	B2	B2	B2
22	30	B4	B2	B2	B2
30	40	B4	C1	C1	C1
37	50	C3	C1	C1	C1
45	60	C3	C1	C1	C1
55	75	C4	C2	C2	C2
75	100	C4	C2	C2	C2

[1] *All power ratings are taken at high overload.*

Table 27: Enclosure Power Ratings, 525–690 V AC

kW	hp	Available enclosure sizes			
		IP20/Chassis	IP21/Type 1	IP55/Type 12	IP66/Type 4X
1.1	1.5	A3	-/A3	–	–
1.5	2.0	A3	-/A3	–	–
2.2	3.0	A3	-/A3	–	–
3.0	4.0	A3	-/A3	–	–
4.0	5.0	A3	-/A3	–	–
5.5	7.5	A3	-/A3	–	–
7.5	10	A3	-/A3	–	–
11	15	B4	B2/B4	B2	–
15	20	B4	B2/B4	B2	–
18	25	B4	B2/B4	B2	–
22	30	B4	B2/B4	B2	–
30	40	B4	B4/C2	C2	–
37	50	C3	C2/C3	C2	–
45	60	C3	C2/C3	C2	–
55	75	D3h	C2/D1h	C2/D1h	–
75	100	D3h	C2/D1h	C2/D1h	–

8.2 Electrical Data

8.2.1 Mains Supply 3x200–240 V AC, T2

Table 28: Mains Supply 3x200–240 V AC, High Overload, 0.25–3.0 kW

Type code	PK25	PK37	PK55	PK75	P1K1	P1K5	P2K2	P3K0
Intermittent overload classification 160% (0.25–11kW), 150% (15–37 kW) for 1 minute/10 minutes								
Typical shaft output power [kW @208V]	0.25	0.37	0.55	0.75	1.10	1.50	2.20	3.00
Typical shaft output power [hp @230V]	0.34	0.50	0.75	1.00	1.50	2.00	3.00	4.00
Protection rating IEC/UL [enclosure size]								
IP20/Chassis (1)	A1/A2	A1/A2	A1/A2	A1/A2	A1/A2	A1/A2	A2	A3
IP21/Type 1 (1)	A1/A2	A1/A2	A1/A2	A1/A2	A1/A2	A1/A2	A2	A3
IP55/Type 12 (2)	A4/A5	A4/A5	A4/A5	A4/A5	A4/A5	A4/A5	A4/A5	A5
IP66/Type 4X (2)	A4/A5	A4/A5	A4/A5	A4/A5	A4/A5	A4/A5	A4/A5	A5
Rated output current								
Continuous (200–240 V) [A]	1.80	2.40	3.50	4.60	6.6	7.5	10.6	12.5

Type code	PK25	PK37	PK55	PK75	P1K1	P1K5	P2K2	P3K0
Intermittent overload (200–240 V) [A]	2.9	3.8	5.6	7.4	10.6	12	17	20
Continuous apparent power (@208 V) [kVA]	0.65	0.86	1.26	1.66	2.38	2.7	3.82	4.5
Continuous apparent power (@230 V) [kVA]	0.72	0.96	1.39	1.83	2.63	2.99	4.22	4.98
Maximum input current								
Continuous (200–240 V) [A]	1.6	2.2	3.2	4.1	5.9	6.8	9.5	11.3
Intermittent overload (200–240 V) [A]	2.56	3.52	5.12	6.56	9.44	10.88	15.2	18.08
More specifications								
Power loss at rated maximum load estimated [3] [W]	21	29	42	54	63	82	116	155
Efficiency at rated output current [4]	0.94	0.94	0.95	0.95	0.96	0.96	0.96	0.96

[1] *Enclosure size A1 is only available as FC 301.*

[2] *Enclosure size A4 is only available without C and D options, or without C option but with backplate.*

[3] *Applies to dimensioning of drive cooling. If the switching frequency is higher than the default setting, the power losses may increase. LCP and typical control card power consumption is included. For power loss data according to IEC 61800-9-2, and EN 50598-2, refer to http://ecosmart.danfoss.com/*

[4] *For energy efficiency class, see 8.5 Ambient Conditions. For part load losses, see http://ecosmart.danfoss.com/.*

Table 29: Mains Supply 3x200–240 V AC, High Overload, 3.7–37 kW

Type code	P3K7	P5K5	P7K5	P11K	P15K	P18K	P22K	P30K	P37K
Intermittent overload classification 160% (0.25–11kW), 150% (15–37 kW) for 1 minute/10 minutes									
Typical shaft output power [kW @208V]	3.70	5.50	7.5	11	15	18.5	22	30	37
Typical shaft output power [hp @230V]	5.00	7.50	10	15	20	25	30	40	50
Protection rating IEC/UL [enclosure size]									
IP20/Chassis [1]	A3	B3	B3	B4	B4	C3	C3	C4	C4
IP21/Type 1 [1]	A3	B1	B1	B2	C1	C1	C1	C2	C2
IP55/Type 12 [2]	A5	B1	B1	B2	C1	C1	C1	C2	C2
IP66/Type 4X [2]	A5	B1	B1	B2	C1	C1	C1	C2	C2
Rated output current									
Continuous (200–240 V) [A]	16.7	24.2	30.8	46.2	59.4	74.8	88	115	143
Intermittent overload (200–240 V) [A]	26.7	38.7	49.3	73.9	89.1	112	132	173	215
Continuous apparent power (@208 V) [kVA]	6.0	8.7	11.1	16.6	21.4	26.9	31.7	41.4	51.5
Continuous apparent power (@230 V) [kVA]	6.65	9.6	12.3	18.4	23.7	29.8	35.1	45.8	57
Maximum input current									
Continuous (200–240 V) [A]	15	22	28	42	54	68	80	104	130
Intermittent overload (200–240 V) [A]	24	35.2	44.8	67.2	81	102	120	156	195
More specifications									
Power loss at rated maximum load estimated [3] [W]	185	239	371	463	624	740	874	1143	1400

Type code	P3K7	P5K5	P7K5	P11K	P15K	P18K	P22K	P30K	P37K
Efficiency at rated output current [4]	0.96	0.96	0.96	0.96	0.96	0.97	0.97	0.97	0.97

[1] *Enclosure size A1 is only available as FC 301.*

[2] *Enclosure size A4 is only available without C and D options, or without C option but with backplate.*

[3] *Applies to dimensioning of drive cooling. If the switching frequency is higher than the default setting, the power losses may increase. LCP and typical control card power consumption is included. For power loss data according to IEC 61800-9-2, and EN 50598-2, refer to http://ecosmart.danfoss.com/*

[4] *For energy efficiency class, see 8.5 Ambient Conditions. For part load losses, see http://ecosmart.danfoss.com/.*

Table 30: Mains Supply 3x200–240 V AC, Normal Overload, 0.25–3.0 kW

Type code	PK25	PK37	PK55	PK75	P1K1	P1K5	P2K2	P3K0
Intermittent overload classification 110% for 1 minute/10 minutes								
Typical shaft output power [kW @208V]	0.25	0.37	0.55	0.75	1.10	1.50	2.20	3.00
Typical shaft output power [hp @230V]	0.34	0.50	0.75	1.00	1.50	2.00	3.00	4.00
Protection rating IEC/UL [enclosure size]								
IP20/Chassis [1]	A1/A2	A1/A2	A1/A2	A1/A2	A1/A2	A1/A2	A2	A3
IP21/Type 1 [1]	A1/A2	A1/A2	A1/A2	A1/A2	A1/A2	A1/A2	A2	A3
IP55/Type 12 [2]	A4/A5	A4/A5	A4/A5	A4/A5	A4/A5	A4/A5	A4/A5	A5
IP66/Type 4X [2]	A4/A5	A4/A5	A4/A5	A4/A5	A4/A5	A4/A5	A4/A5	A5
Rated output current								
Continuous (200–240 V) [A]	1.8	2.4	3.5	4.6	6.6	7.5	10.6	12.5
Intermittent overload (200–240 V) [A]	2.0	2.6	3.9	5.1	7.3	8.3	11.7	13.8
Continuous apparent power (@208 V) [kVA]	0.65	0.86	1.26	1.66	2.38	2.7	3.82	4.5
Continuous apparent power (@230 V) [kVA]	0.72	0.96	1.39	1.83	2.63	2.99	4.22	4.98
Maximum input current								
Continuous (200–240 V) [A]	1.6	2.2	3.2	4.1	5.9	6.8	9.5	11.3
Intermittent overload (200–240 V) [A]	1.8	2.4	3.5	4.5	6.5	7.5	10.5	12.4
More specifications								
Power loss at rated maximum load estimated [3] [W]	21	29	42	54	63	82	116	155
Efficiency at rated output current [4]	0.94	0.94	0.95	0.95	0.96	0.96	0.96	0.96

[1] *Enclosure size A1 is only available as FC 301.*

[2] *Enclosure size A4 is only available without C and D options, or without C option but with backplate.*

[3] *Applies to dimensioning of drive cooling. If the switching frequency is higher than the default setting, the power losses may increase. LCP and typical control card power consumption is included. For power loss data according to IEC 61800-9-2, and EN 50598-2, refer to http://ecosmart.danfoss.com/*

[4] *For energy efficiency class, see 8.5 Ambient Conditions. For part load losses, see http://ecosmart.danfoss.com/.*

Table 31: Mains Supply 3x200–240 V AC, Normal Overload, 3.7–37 kW

Type code	P3K7	P5K5	P7K5	P11K	P15K	P18K	P22K	P30K	P37K
Intermittent overload classification 110% for 1 minute/10 minutes									
Typical shaft output power [kW @208V]	3.70	5.50	7.5	11	15	18.5	22	30	37
Typical shaft output power [hp @230V]	5.00	7.50	10	15	20	25	30	40	50
Protection rating IEC/UL [enclosure size]									
IP20/Chassis [1]	A3	B3	B3	B4	B4	C3	C3	C4	C4
IP21/Type 1 [1]	A3	B1	B1	B2	C1	C1	C1	C2	C2
IP55/Type 12 [2]	A5	B1	B1	B2	C1	C1	C1	C2	C2
IP66/Type 4X [2]	A5	B1	B1	B2	C1	C1	C1	C2	C2
Rated output current									
Continuous (200–240 V) [A]	16.7	30.8	46.2	59.4	74.8	88	115	143	170
Intermittent overload (200–240 V) [A]	18.4	33.9	50.8	65.3	82.3	36.8	127	157	187
Continuous apparent power (@208 V) [kVA]	6.0	11.1	16.6	21.4	26.9	31.7	41.4	51.5	61.2
Continuous apparent power (@230 V) [kVA]	6.65	3.6	12.3	18.4	23.7	29.8	35.1	45.8	57
Maximum input current									
Continuous (200–240 V) [A]	15	28	42	54	68	80	104	130	154
Intermittent overload (200–240 V) [A]	16.5	30.8	46.2	59.4	74.8	88	114	143	169
More specifications									
Power loss at rated maximum load estimated [3] [W]	185	310	514	602	737	845	1140	1353	1636
Efficiency at rated output current [4]	0.96	0.96	0.96	0.96	0.96	0.97	0.97	0.97	0.97

[1] *Enclosure size A1 is only available as FC 301.*

[2] *Enclosure size A4 is only available without C and D options, or without C option but with backplate.*

[3] *Applies to dimensioning of drive cooling. If the switching frequency is higher than the default setting, the power losses may increase. LCP and typical control card power consumption is included. For power loss data according to IEC 61800-9-2, and EN 50598-2, refer to http://ecosmart.danfoss.com/*

[4] *For energy efficiency class, see 8.5 Ambient Conditions. For part load losses, see http://ecosmart.danfoss.com/.*

8.2.2 Mains Supply 3x380–480 V AC, FC 301 T4 and 3x380–500 V AC, FC 302 T5

Table 32: Mains Supply 3x380–480 V AC (FC 301 T4) and 3x380–500 V AC (FC 302 T5), High Overload, 0.37–7.5 kW

Type code	PK37	PK55	PK75	P1K1	P1K5	P2K2	P3K0	P4K0	P5K5	P7K5
Intermittent overload classification 160% (0.37–22 kW), 150% (30–75 kW) for 1 minute/10 minutes										
Typical shaft output power [kW @400 V]	0.37	0.55	0.75	1.1	1.5	2.2	3.0	4.0	5.5	7.5
Typical shaft output power [hp @460 V]	0.5	0.75	1.0	1.5	2.0	3.0	4.0	5.0	7.5	10
Protection rating IEC/UL [enclosure size]										

Type code	PK37	PK55	PK75	P1K1	P1K5	P2K2	P3K0	P4K0	P5K5	P7K5
IP20/Chassis [1]	A1/A2	A1/A2	A1/A2	A1/A2	A1/A2	A2	A2	A2	A3	A3
IP21/Type 1 [1]	A1/A2	A1/A2	A1/A2	A1/A2	A1/A2	A2	A2	A2	A3	A3
IP55/Type 12 [2]	A4/A5	A4/A5	A4/A5	A4/A5	A4/A5	A4/A5	A4/A5	A4/A5	A5	A5
IP66/Type 4X [2]	A4/A5	A4/A5	A4/A5	A4/A5	A4/A5	A4/A5	A4/A5	A4/A5	A5	A5
Rated output current										
Continuous (380–440 V) [A]	1.3	1.8	2.4	3.0	4.1	5.6	7.2	10	13	16
Intermittent overload (380–440 V) [A]	2.1	2.9	3.8	4.8	6.6	9.0	11.5	16	20.8	25.6
Continuous (441–500 V) [A]	1.2	1.6	2.1	2.7	3.4	4.8	6.3	8.2	11	14.5
Intermittent overload (441–500 V) [A]	1.9	2.6	3.4	4.3	5.4	7.7	10.1	13.1	17.6	23.2
Continuous apparent power (@400 V) [kVA]	0.9	1.3	1.7	2.1	2.8	3.9	5.0	6.9	9.0	11
Continuous apparent power (@460 V) [kVA]	0.9	1.3	1.7	2.4	2.7	3.8	5.0	6.5	8.8	11.6
Maximum input current										
Continuous (380–440 V) [A]	1.2	1.6	2.2	2.7	3.7	5.0	6.5	9.0	11.7	14.4
Intermittent overload (380–440 V) [A]	1.9	2.6	3.5	4.3	5.9	8.0	10.4	14.4	18.7	23
Continuous (441–500 V) [A]	1.0	1.4	1.9	2.7	3.1	4.3	5.7	7.4	9.9	13
Intermittent overload (441–500 V) [A]	1.6	2.24	3.04	4.32	4.96	6.88	9.12	11.84	15.84	20.8
More specifications										
Power loss at rated maximum load estimated [3] [W]	35	42	46	58	62	88	116	124	187	255
Efficiency at rated output current [4]	0.93	0.95	0.96	0.96	0.97	0.97	0.97	0.97	0.97	0.97

[1] *Enclosure size A1 is only available as FC 301.*

[2] *Enclosure size A4 is only available without C and D option, or without C option but with backplate.*

[3] *Applies to dimensioning of drive cooling. If the switching frequency is higher than the default setting, the power losses may increase. LCP and typical control card power consumption is included. For power loss data according to IEC 61800-9-2, and EN 50598-2, refer to http://ecosmart.danfoss.com/.*

[4] *For energy efficiency class, see 8.5 Ambient Conditions. For part load losses, see http://ecosmart.danfoss.com/.*

Table 33: Mains Supply 3x380–480 V AC (FC 301 T4) and 3x380–500 V AC (FC 302 T5), High Overload, 11–75 kW

Type code	P11K	P15K	P18K	P22K	P30K	P37K	P45K	P55K	P75K
Intermittent overload classification 160% (0.37–22 kW), 150% (30–75 kW) for 1 minute/10 minutes									
Typical shaft output power [kW @400 V]	11	15	18.5	22	30	37	45	55	75
Typical shaft output power [hp @460 V]	15	20	25	30	40	50	60	75	100
Protection rating IEC/UL [enclosure size]									
IP20/Chassis [1]	B3	B3	B4	B4	B4	C3	C3	C4	C4
IP21/Type 1 [1]	B1	B1	B2	B2	C1	C1	C1	C2	C2

Type code	P11K	P15K	P18K	P22K	P30K	P37K	P45K	P55K	P75K
IP55/Type 12 [2]	B1	B1	B2	B2	C1	C1	C1	C2	C2
IP66/Type 4X [2]	B1	B1	B2	B2	C1	C1	C1	C2	C2
Rated output current									
Continuous (380–440 V) [A]	24	32	37.5	44	61	73	90	106	147
Intermittent overload (380–440 V) [A]	38.4	51.2	60	70.4	91.5	110	135	159	221
Continuous (441–500 V) [A]	21	27	34	40	52	65	80	105	130
Intermittent overload (441–500 V) [A]	33.6	43.2	54.4	64	78	97.5	120	158	195
Continuous apparent power (@400 V) [kVA]	16.6	22.2	26	30.5	42.3	50.6	62.4	73.4	102
Continuous apparent power (@460 V) [kVA]	16.7	21.5	27.1	31.9	41.4	51.8	63.7	83.7	104
Maximum input current									
Continuous (380–440 V) [A]	22	29	34	40	55	66	82	96	133
Intermittent overload (380–440 V) [A]	35.2	46.4	54.4	64	82.5	99	123	144	200
Continuous (441–500 V) [A]	19	25	31	36	47	59	73	95	118
Intermittent overload (441–500 V) [A]	30.4	40	49.6	57.6	70.5	88.5	110	143	177
More specifications									
Power loss at rated maximum load estimated [3] [W]	291	379	444	547	570	697	891	1022	1232
Efficiency at rated output current [4]	0.98	0.98	0.98	0.98	0.98	0.98	0.98	0.98	0.99

[1] *Enclosure size A1 is only available as FC 301.*

[2] *Enclosure size A4 is only available without C and D option, or without C option but with backplate.*

[3] *Applies to dimensioning of drive cooling. If the switching frequency is higher than the default setting, the power losses may increase. LCP and typical control card power consumptions is included. For power loss data according to IEC 61800-9-2, and EN 50598-2, refer to http://ecosmart.danfoss.com/.*

[4] *For energy efficiency class, see 8.5 Ambient Conditions. For part load losses, see http://ecosmart.danfoss.com/.*

Table 34: Mains Supply 3x380–480 V AC (FC 301 T4) and 3x380–500 V AC (FC 302 T5), Normal Overload, 0.37–7.5 kW

Type code	PK37	PK55	PK75	P1K1	P1K5	P2K2	P3K0	P4K0	P5K5	P7K5
Intermittent overload classification 160% (0.37–22 kW), 150% (30–75 kW) for 1 minute/10 minutes										
Typical shaft output power [kW @400 V]	0.37	0.55	0.75	1.1	1.5	2.2	3.0	4.0	5.5	7.5
Typical shaft output power [hp @460 V]	0.5	0.75	1.0	1.5	2.0	3.0	4.0	5.0	7.5	10
Protection rating IEC/UL [enclosure size]										
IP20/Chassis [1]	A1/A2	A1/A2	A1/A2	A1/A2	A1/A2	A2	A2	A2	A3	A3
IP21/Type 1 [1]	A1/A2	A1/A2	A1/A2	A1/A2	A1/A2	A2	A2	A2	A3	A3
IP55/Type 12 [2]	A4/A5	A4/A5	A4/A5	A4/A5	A4/A5	A4/A5	A4/A5	A4/A5	A5	A5
IP66/Type 4X [2]	A4/A5	A4/A5	A4/A5	A4/A5	A4/A5	A4/A5	A4/A5	A4/A5	A5	A5
Rated output current										

Type code	PK37	PK55	PK75	P1K1	P1K5	P2K2	P3K0	P4K0	P5K5	P7K5
Continuous (380–440 V) [A]	1.3	1.8	2.4	3.0	4.1	5.6	7.2	10	13	16
Intermittent overload (380–440 V) [A]	1.4	2.0	2.6	3.3	4.5	6.2	7.9	11	14.3	17.6
Continuous (441–500 V) [A]	1.2	1.6	2.1	2.7	3.4	4.8	6.3	8.2	11	14.5
Intermittent overload (441–500 V) [A]	1.3	1.8	2.3	3.0	3.7	5.3	6.9	9.0	12.1	16
Continuous apparent power (@400 V) [kVA]	0.9	1.3	1.7	2.1	2.8	3.9	5.0	6.9	9.0	11
Continuous apparent power (@460 V) [kVA]	0.9	1.3	1.7	2.4	2.7	3.8	5.0	6.5	8.8	11.6
Maximum input current										
Continuous (380–440 V) [A]	1.2	1.6	2.2	2.7	3.7	5.0	6.5	9.0	11.7	14.4
Intermittent overload (380–440 V) [A]	1.3	1.8	2.4	3.0	4.1	5.5	7.2	9.9	12.9	15.8
Continuous (441–500 V) [A]	1.0	1.4	1.9	2.7	3.1	4.3	5.7	7.4	9.9	13
Intermittent overload (441–500 V) [A]	1.1	1.5	2.1	3.0	3.4	4.7	6.3	8.1	10.9	14.3
More specifications										
Power loss at rated maximum load estimated [3] [W]	35	42	46	58	62	88	116	124	187	255
Efficiency at rated output current [4]	0.93	0.95	0.96	0.96	0.97	0.97	0.97	0.97	0.97	0.97

[1] *Enclosure size A1 is only available as FC 301.*

[2] *Enclosure size A4 is only available without C and D option, or without C option but with backplate.*

[3] *Applies to dimensioning of drive cooling. If the switching frequency is higher than the default setting, the power losses may increase. LCP and typical control card power consumption is included. For power loss data according to IEC 61800-9-2, and EN 50598-2, refer to http://ecosmart.danfoss.com/.*

[4] *For energy efficiency class, see 8.5 Ambient Conditions. For part load losses, see http://ecosmart.danfoss.com/.*

Table 35: Mains Supply 3x380–480 V AC (FC 301 T4) and 3x380–500 V AC (FC 302 T5), Normal Overload, 11–75 kW

Type code	P11K	P15K	P18K	P22K	P30K	P37K	P45K	P55K	P75K
Intermittent overload classification 160% (0.37–22 kW), 150% (30–75 kW) for 1 minute/10 minutes									
Typical shaft output power [kW @400 V]	11	15	18.5	22	30	37	45	55	75
Typical shaft output power [hp @460 V]	15	20	25	30	40	50	60	75	100
Protection rating IEC/UL [enclosure size]									
IP20/Chassis [1]	B3	B3	B4	B4	B4	C3	C3	C4	C4
IP21/Type 1 [1]	B1	B1	B2	B2	C1	C1	C1	C2	C2
IP55/Type 12 [2]	B1	B1	B2	B2	C1	C1	C1	C2	C2
IP66/Type 4X [2]	B1	B1	B2	B2	C1	C1	C1	C2	C2
Rated output current									
Continuous (380–440 V) [A]	32	37.5	44	61	73	90	106	147	177
Intermittent overload (380–440 V) [A]	26.4	35.2	41.3	48.4	67.1	80.3	99	117	162
Continuous (441–500 V) [A]	27	34	40	52	65	80	105	130	160

Type code	P11K	P15K	P18K	P22K	P30K	P37K	P45K	P55K	P75K
Intermittent overload (441–500 V) [A]	23.1	29.7	37.4	44	57.2	71.5	88	116	143
Continuous apparent power (@400 V) [kVA]	16.6	22.2	26	30.5	42.3	50.6	62.4	73.4	102
Continuous apparent power (@460 V) [kVA]	16.6	21.5	27.1	31.9	41.4	51.8	63.7	83.7	104
Maximum input current									
Continuous (380–440 V) [A]	22	29	34	40	55	66	82	96	133
Intermittent overload (380–440 V) [A]	24.2	31.9	37.4	44	60.5	72.6	90.2	106	146
Continuous (441–500 V) [A]	19	25	31	36	47	59	73	95	118
Intermittent overload (441–500 V) [A]	20.9	27.5	34.1	39.6	51.7	64.9	80.3	105	130
More specifications									
Power loss at rated maximum load estimated (3) [W]	392	465	525	739	698	843	1083	1384	1474
Efficiency at rated output current (4)	0.98	0.98	0.98	0.98	0.98	0.98	0.98	0.98	0.99

[1] *Enclosure size A1 is only available as FC 301.*

[2] *Enclosure size A4 is only available without C and D option, or without C option but with backplate.*

[3] *Applies to dimensioning of drive cooling. If the switching frequency is higher than the default setting, the power losses may increase. LCP and typical control card power consumption is included. For power loss data according to IEC 61800-9-2, and EN 50598-2, refer to http://ecosmart.danfoss.com/.*

[4] *For energy efficiency class, see 8.5 Ambient Conditions. For part load losses, see http://ecosmart.danfoss.com/.*

8.2.3 Mains Supply 3x525–600 V AC, T6

Table 36: Mains Supply 3x525–600 V AC, High Overload, 0.75–7.5 kW

Type code	PK75	P1K1	P1K5	P2K2	P3K0	P4K0	P5K5	P7K5
Intermittent overload classification 160% (0.75– 22 kW), 150% (30–75 kW) for 1 minute/10 minutes								
Typical shaft output power [kW @575 V]	0.75	1.1	1.5	2.2	3.0	4.0	5.5	7.5
Typical shaft output power [hp @575 V]	1.0	1.5	2.0	3.0	4.0	5.0	7.5	10
Protection rating IEC/UL [enclosure size]								
IP20/Chassis (1)	A3	A3	A3	A3	A3	A3	A3	A3
IP21/Type 1 (1)	A3	A3	A3	A3	A3	A3	A3	A3
IP55/Type 12 (2)	A5	A5	A5	A5	A5	A5	A5	A5
IP66/Type 4X (2)	A5	A5	A5	A5	A5	A5	A5	A5
Rated output current								
Continuous (525–550 V) [A]	1.8	2.6	2.9	4.1	5.2	6.4	9.5	11.5
Intermittent overload (525–550 V) [A]	2.9	4.2	4.6	6.6	8.3	10.2	15.2	18.4
Continuous (551–600 V) [A]	1.7	2.4	2.7	3.9	4.9	6.1	9.0	11
Intermittent overload (551–600 V) [A]	2.7	3.8	4.3	6.2	7.8	9.8	14.4	17.6
Continuous apparent power (@550 V) [kVA]	1.7	2.5	2.8	3.9	5.0	6.1	9.0	11

Type code	PK75	P1K1	P1K5	P2K2	P3K0	P4K0	P5K5	P7K5
Continuous apparent power (@575 V) [kVA]	1.7	2.4	2.7	3.9	4.9	6.1	9.0	11
Maximum input current								
Continuous at 550 V [A]	1.7	2.4	2.7	4.1	5.2	5.8	8.6	10.4
Intermittent overload at 550 V [A]	2.7	3.8	4.3	6.6	8.3	9.3	13.8	16.6
Continuous at 575 V [A]	1.6	2.3	2.5	3.9	4.9	5.5	8.2	9.9
Intermittent overload at 575 V [A]	2.6	3.7	4.0	6.2	7.8	8.8	13.1	15.8
More specifications								
Power loss at rated maximum load estimated [3] [W]	35	50	65	92	122	145	195	261
Efficiency at rated output current [4]	0.97	0.97	0.97	0.97	0.97	0.97	0.97	0.97

[1] *Enclosure size A1 is only available as FC 301.*

[2] *Enclosure size A4 is only available without C and D options, or without C option but with backplate.*

[3] *Applies to dimensioning of drive cooling. If the switching frequency is higher than the default setting, the power losses may increase. LCP and typical control card power consumption is included. For power loss data according to IEC 61800-9-2, and EN 50598-2, refer to http://ecosmart.danfoss.com/.*

[4] *For energy efficiency class, see 8.5 Ambient Conditions. For part load losses, see http://ecosmart.danfoss.com/.*

Table 37: Mains Supply 3x525–600 V AC, High Overload, 11–75 kW

Type code	P11K	P15K	P18K	P22K	P30K	P37K	P45K	P55K	P75K
Intermittent overload classification 160% (0.75– 22 kW), 150% (30–75 kW) for 1 minute/10 minutes									
Typical shaft output power [kW @575 V]	11	15	18.5	22	30	37	45	55	75
Typical shaft output power [hp @575 V]	15	20	25	30	40	50	60	75	100
Protection rating IEC/UL [enclosure size]									
IP20/Chassis [1]	B3	B3	B4	B4	B4	C3	C3	C4	C4
IP21/Type 1 [1]	B1	B1	B2	B2	C1	C1	C1	C2	C2
IP55/Type 12 [2]	B1	B1	B2	B2	C1	C1	C1	C2	C2
IP66/Type 4X [2]	B1	B1	B2	B2	C1	C1	C1	C2	C2
Rated output current									
Continuous (525–550 V) [A]	19	23	28	36	43	54	65	87	105
Intermittent overload (525–550 V) [A]	30	37	45	58	65	81	98	131	158
Continuous (551–600 V) [A]	18	22	27	34	41	52	62	83	100
Intermittent overload (551–600 V) [A]	29	35	43	54	62	78	93	125	150
Continuous apparent power (@550 V) [kVA]	18.1	21.9	26.7	34.3	41	51.4	61.9	82.9	100
Continuous apparent power (@575 V) [kVA]	17.9	21.9	26.9	33.9	40.8	51.8	61.7	82.7	99.6
Maximum input current									
Continuous at 550 V [A]	17.2	20.9	25.4	32.7	39	49	59	78.9	95.3
Intermittent overload at 550 V [A]	27.5	33.4	40.6	52.3	59.5	73.5	88.5	118.4	143

Type code	P11K	P15K	P18K	P22K	P30K	P37K	P45K	P55K	P75K
Continuous at 575 V [A]	16.3	20	24.5	30.8	37.2	47.2	56.2	75.3	90.7
Intermittent overload at 575 V [A]	26.1	32	39.2	49.3	55.8	70.8	84.3	113	136.1
More specifications									
Power loss at rated maximum load estimated [3] [W]	220	300	370	440	600	740	900	1100	1500
Efficiency at rated output current [4]	0.98	0.98	0.98	0.98	0.98	0.98	0.98	0.98	0.98

[1] *Enclosure size A1 is only available as FC 301.*

[2] *Enclosure size A4 is only available without C and D options, or without C option but with backplate.*

[3] *Applies to dimensioning of drive cooling. If the switching frequency is higher than the default setting, the power losses may increase. LCP and typical control card power consumption is included. For power loss data according to IEC 61800-9-2, and EN 50598-2, refer to http://ecosmart.danfoss.com/.*

[4] *For energy efficiency class, see 8.5 Ambient Conditions. For part load losses, see http://ecosmart.danfoss.com/.*

Table 38: Mains Supply 3x525–600 V AC, Normal Overload, 0.75–7.5 kW

Type code	PK75	P1K1	P1K5	P2K2	P3K0	P4K0	P5K5	P7K5
Intermittent overload classification 160% (0.75– 22 kW), 150% (30–75 kW) for 1 minute/10 minutes								
Typical shaft output power [kW @575 V]	0.75	1.1	1.5	2.2	3.0	4.0	5.5	7.5
Typical shaft output power [hp @575 V]	1.0	1.5	2.0	3.0	4.0	5.0	7.5	10
Protection rating IEC/UL [enclosure size]								
IP20/Chassis [1]	A3	A3	A3	A3	A3	A3	A3	A3
IP21/Type 1 [1]	A3	A3	A3	A3	A3	A3	A3	A3
IP55/Type 12 [2]	A5	A5	A5	A5	A5	A5	A5	A5
IP66/Type 4X [2]	A5	A5	A5	A5	A5	A5	A5	A5
Rated output current								
Continuous (525–550 V) [A]	1.8	2.6	2.9	4.1	5.2	6.4	9.5	11.5
Intermittent overload (525–550 V) [A]	2.0	2.9	3.2	4.5	5.7	7.0	10.5	12.7
Continuous (551–600 V) [A]	1.7	2.4	2.7	3.9	4.9	6.1	9.0	11
Intermittent overload (551–600 V) [A]	1.9	2.6	3.0	4.3	5.4	6.7	9.9	12.1
Continuous apparent power (@550 V) [kVA]	1.7	2.5	2.8	3.9	5.0	6.1	9.0	11
Continuous apparent power (@575 V) [kVA]	1.7	2.4	2.7	3.9	4.9	6.1	9.0	11
Maximum input current								
Continuous at 550 V [A]	1.7	2.4	2.7	4.1	5.2	5.8	8.6	10.4
Intermittent overload at 550 V [A]	1.9	2.6	3.0	4.5	5.7	6.4	9.5	11.4
Continuous at 575 V [A]	1.6	2.3	2.5	3.9	4.9	5.5	8.2	9.9
Intermittent overload at 575 V [A]	1.8	2.5	2.8	4.3	5.4	6.1	9.0	10.9
More specifications								
Power loss at rated maximum load estimated [3] [W]	35	50	65	92	122	145	195	261

Type code	PK75	P1K1	P1K5	P2K2	P3K0	P4K0	P5K5	P7K5
Efficiency at rated output current [4]	0.97	0.97	0.97	0.97	0.97	0.97	0.97	0.97

[1] *Enclosure size A1 is only available as FC 301.*

[2] *Enclosure size A4 is only available without C and D options, or without C option but with backplate.*

[3] *Applies to dimensioning of drive cooling. If the switching frequency is higher than the default setting, the power losses may increase. LCP and typical control card power consumption is included. For power loss data according to IEC 61800-9-2, and EN 50598-2, refer to http://ecosmart.danfoss.com/.*

[4] *For energy efficiency class, see 8.5 Ambient Conditions. For part load losses, see http://ecosmart.danfoss.com/.*

Table 39: Mains Supply 3x525–600 V AC, Normal Overload, 11–75 kW

Type code	P11K	P15K	P18K	P22K	P30K	P37K	P45K	P55K	P75K
Intermittent overload classification 160% (0.75– 22 kW), 150% (30–75 kW) for 1 minute/10 minutes									
Typical shaft output power [kW @575 V]	11	15	18.5	22	30	37	45	55	75
Typical shaft output power [hp @575 V]	15	20	25	30	40	50	60	75	100
Protection rating IEC/UL [enclosure size]									
IP20/Chassis [1]	B3	B3	B4	B4	B4	C3	C3	C4	C4
IP21/Type 1 [1]	B1	B1	B2	B2	C1	C1	C1	C2	C2
IP55/Type 12 [2]	B1	B1	B2	B2	C1	C1	C1	C2	C2
IP66/Type 4X [2]	B1	B1	B2	B2	C1	C1	C1	C2	C2
Rated output current									
Continuous (525–550 V) [A]	19	23	28	36	43	54	65	87	105
Intermittent overload (525–550 V) [A]	20.9	25.3	30.8	39.6	47.3	59.4	71.5	95.7	115.5
Continuous (551–600 V) [A]	18	22	27	34	41	52	62	83	100
Intermittent overload (551–600 V) [A]	19.8	24.2	29.7	37.4	45.1	57.2	68.2	91.3	110
Continuous apparent power (@550 V) [kVA]	18.1	21.9	26.7	34.3	41	51.4	61.9	82.9	100
Continuous apparent power (@575 V) [kVA]	17.9	21.9	26.9	33.9	40.8	51.8	61.7	82.7	99.6
Maximum input current									
Continuous at 550 V [A]	17.2	20.9	25.4	32.7	39	49	59	78.9	95.3
Intermittent overload at 550 V [A]	18.9	23	27.9	36	42.9	53.9	64.9	86.8	104.8
Continuous at 575 V [A]	16.3	20	24.5	30.8	37.2	47.2	56.2	75.3	90.7
Intermittent overload at 575 V [A]	17.9	22	27	33.9	40.9	51.9	61.8	82.8	99.8
More specifications									
Power loss at rated maximum load estimated [3] [W]	300	370	440	600	740	900	1100	1500	1800
Efficiency at rated output current [4]	0.98	0.98	0.98	0.98	0.98	0.98	0.98	0.98	0.98

[1] *Enclosure size A1 is only available as FC 301.*

[2] *Enclosure size A4 is only available without C and D options, or without C option but with backplate.*

[3] *Applies to dimensioning of drive cooling. If the switching frequency is higher than the default setting, the power losses may increase. LCP and typical control card power consumption is included. For power loss data according to IEC 61800-9-2, and EN 50598-2, refer to http://ecosmart.danfoss.com/.*

[4] For energy efficiency class, see 8.5 Ambient Conditions. For part load losses, see http://ecosmart.danfoss.com/.

8.2.4 Mains Supply 3x525–690 V AC, T7

Table 40: Mains Supply 3x525–690 V AC, High Overload, 1.1–11 kW

Type code	P1K1	P1K5	P2K2	P3K0	P4K0	P5K5	P7K5	P11K
Intermittent overload classification 160% (1.1– 30 kW), 150% (>30 kW) for 1 minute/10 minutes								
Typical shaft output power [kW @690 V]	1.1	1.5	2.2	3.0	4.0	5.5	7.5	11
Typical shaft output power [hp @575 V]	1.5	2	3.0	4.0	5.0	7.5	10	15
Protection rating IEC/UL [enclosure size]								
IP20/Chassis [1]	A3	A3	A3	A3	A3	A3	A3	B4
IP21/Type 1 [1]	–/A3	–/A3	–/A3	–/A3	–/A3	–/A3	–/A3	B2/B4
IP55/Type 12 [2]	–	–	–	–	–	–	–	B2
IP66/Type 4X [2]	–	–	–	–	–	–	–	–
Rated output current								
Continuous (525–550 V) [A]	2.1	2.7	3.9	4.9	6.1	9	11	14
Intermittent overload (525–550 V) [A]	3.4	4.3	6.2	7.8	9.8	14.4	17.6	22.4
Continuous (551–690 V) [A]	1.6	2.2	3.2	4.5	5.5	7.5	10	13
Intermittent overload (551–690 V) [A]	2.6	3.5	5.1	7.2	8.8	12	16	20.8
Continuous apparent power (1.1–45 kW @525 V, 55–75 kW @575 V) [kVA]	1.9	2.5	3.5	4.5	5.5	8.2	10	12.7
Continuous apparent power (@690 V) [kVA]	1.9	2.6	3.8	5.4	6.6	9.0	12	15.5
Maximum input current								
Continuous (525–550 V) [A]	1.9	2.4	3.5	4.4	5.5	8.1	9.9	13.5
Intermittent overload (525–550 V) [A]	3.0	3.9	5.6	7.0	8.8	12.9	15.8	21.6
Continuous (551–690 V) [A]	1.4	2.0	2.9	4.0	4.9	6.7	9.0	12.5
Intermittent overload (551–690 V) [A]	2.3	3.2	4.6	6.5	7.9	10.8	14.4	20
More specifications								
Power loss at rated maximum load estimated [3] [W]	44	60	88	120	160	220	300	150
Efficiency at rated output current [4]	0.96	0.96	0.96	0.96	0.96	0.96	0.96	0.98

[1] Enclosure size A1 is only available as FC 301.

[2] Enclosure size A4 is only available without C and D options, or without C option but with backplate.

[3] Applies to dimensioning of drive cooling. If the switching frequency is higher than the default setting, the power losses may increase. LCP and typical control card power consumption is included. For power loss data according to IEC 61800-9-2, and EN 50598-2, refer to http://ecosmart.danfoss.com/.

[4] For energy efficiency class, see 8.5 Ambient Conditions. For part load losses, see http://ecosmart.danfoss.com/.

Table 41: Mains Supply 3x525–690 V AC, High Overload, 15–75 kW

Type code	P15K	P18K	P22K	P30K	P37K	P45K	P55K	P75K
Intermittent overload classification 160% (1.1– 30 kW), 150% (>30 kW) for 1 minute/10 minutes								
Typical shaft output power [kW @690 V]	15	18.5	22	30	37	45	55	75
Typical shaft output power [hp @575 V]	20	25	30	40	50	60	60	75
Protection rating IEC/UL [enclosure size]								
IP20/Chassis [(1)]	B4	B4	B4	B4	C3	C3	D3	D3
IP21/Type 1 [(1)]	B2/B4	B2/B4	B2/B4	C2/B4	C2/C3	C2/C3	C2/D1	C2/D1
IP55/Type 12 [(2)]	B2	B2	B2	C2	C2	C2	C2/D1	C2/D1
IP66/Type 4X [(2)]	–	–	–	–	–	–	–	–
Rated output current								
Continuous (525–550 V) [A]	19	23	28	36	43	54	65/76	87/90
Intermittent overload (525–550 V) [A]	30.4	36.8	44.8	54	64.5	81	97.5/122	130.5/135
Continuous (551–690 V) [A]	18	22	27	34	41	52	62/73	83/86
Intermittent overload (551–690 V) [A]	28.8	35.2	43.2	51	61.5	78	93/117	124.5/129
Continuous apparent power (1.1–45 kW @525 V, 55–75 kW @575 V) [kVA]	17.3	20.9	25.5	32.7	41	51.4	61.9/73	82.9/86
Continuous apparent power (@690 V) [kVA]	21.5	26.3	32.3	40.6	49	62.1	74.1/87	99.2/103
Maximum input current								
Continuous (525–550 V) [A]	18.3	22.2	27	34.7	41.4	52	71/77	87/89
Intermittent overload (525–550 V) [A]	29.3	35.5	43.2	52	62.2	78.1	105/115	129/130
Continuous (551–690 V) [A]	17.3	21.2	26	32.8	39.5	50.1	70/77	-/87
Intermittent overload (551–690 V) [A]	27.8	33.9	41.6	49.1	59.3	75.2	105/115	-/130
More specifications								
Power loss at rated maximum load estimated [(3)] [W]	220	300	370	600	740	900	1100	1500
Efficiency at rated output current [(4)]	0.98	0.98	0.98	0.98	0.98	0.98	0.98	0.98

[1] *Enclosure size A1 is only available as FC 301.*

[2] *Enclosure size A4 is only available without C and D options, or without C option but with backplate.*

[3] *Applies to dimensioning of drive cooling. If the switching frequency is higher than the default setting, the power losses may increase. LCP and typical control card power consumption is included. For power loss data according to IEC 61800-9-2, and EN 50598-2, refer to http://ecosmart.danfoss.com/.*

[4] *For energy efficiency class, see 8.5 Ambient Conditions. For part load losses, see http://ecosmart.danfoss.com/.*

Table 42: Mains Supply 3x525–690 V AC, Normal Overload, 1.1–11 kW

Type code	P1K1	P1K5	P2K2	P3K0	P4K0	P5K5	P7K5	P11K
Intermittent overload classification 160% (1.1– 30 kW), 150% (>30 kW) for 1 minute/10 minutes								
Typical shaft output power [kW @690 V]	1.1	1.5	2.2	3.0	4.0	5.5	7.5	11
Typical shaft output power [hp @575 V]	1.5	2	3.0	4.0	5.0	7.5	10	15

Type code	P1K1	P1K5	P2K2	P3K0	P4K0	P5K5	P7K5	P11K
Protection rating IEC/UL [enclosure size]								
IP20/Chassis [1]	A3	A3	A3	A3	A3	A3	A3	B4
IP21/Type 1 [1]	–/A3	–/A3	–/A3	–/A3	–/A3	–/A3	–/A3	B2/B4
IP55/Type 12 [2]	–	–	–	–	–	–	–	B2
IP66/Type 4X [2]	–	–	–	–	–	–	–	–
Rated output current								
Continuous (525–550 V) [A]	2.1	2.7	3.9	4.9	6.1	9.0	11	19
Intermittent overload (525–550 V) [A]	3.4	4.3	6.2	7.8	9.8	14.4	17.6	20.9
Continuous (551–690 V) [A]	1.6	2.2	3.2	4.5	5.5	7.5	10	18
Intermittent overload (551–690 V) [A]	2.6	3.5	5.1	7.2	8.8	12	16	19.8
Continuous apparent power (1.1–45 kW @525 V, 55–75 kW @575 V) [kVA]	1.9	2.5	3.5	4.5	5.5	8.2	10	17.3
Continuous apparent power (@690 V) [kVA]	1.9	2.6	3.8	5.4	6.6	9.0	12	21.5
Maximum input current								
Continuous (525–550 V) [A]	1.9	2.4	3.5	4.4	5.5	8.1	9.9	18.3
Intermittent overload (525–550 V) [A]	3.0	3.9	5.6	7.0	8.8	12.9	15.8	20.1
Continuous (551–690 V) [A]	1.4	2.0	2.9	4.0	4.9	6.7	9.0	17.3
Intermittent overload (551–690 V) [A]	2.3	3.2	4.6	6.5	7.9	10.8	14.4	19.1
More specifications								
Power loss at rated maximum load estimated [3] [W]	44	60	88	120	160	220	300	220
Efficiency at rated output current [4]	0.96	0.96	0.96	0.96	0.96	0.96	0.96	0.98

[1] *Enclosure size A1 is only available as FC 301.*

[2] *Enclosure size A4 is only available without C and D options, or without C option but with backplate.*

[3] *Applies to dimensioning of drive cooling. If the switching frequency is higher than the default setting, the power losses may increase. LCP and typical control card power consumption is included. For power loss data according to IEC 61800-9-2, and EN 50598-2, refer to http://ecosmart.danfoss.com/.*

[4] *For energy efficiency class, see 8.5 Ambient Conditions. For part load losses, see http://ecosmart.danfoss.com/.*

Table 43: Mains Supply 3x525–690 V AC, Normal Overload, 15–75 kW

Type code	P15K	P18K	P22K	P30K	P37K	P45K	P55K	P75K
Intermittent overload classification 160% (1.1– 30 kW), 150% (>30 kW) for 1 minute/10 minutes								
Typical shaft output power [kW @690 V]	15	18.5	22	30	37	45	55	75
Typical shaft output power [hp @575 V]	20	25	30	40	50	60	60	75
Protection rating IEC/UL [enclosure size]								
IP20/Chassis [1]	B4	B4	B4	B4	C3	C3	D3	D3
IP21/Type 1 [1]	B2/B4	B2/B4	B2/B4	C2/B4	C2/C3	C2/C3	C2/D1	C2/D1
IP55/Type 12 [2]	B2	B2	B2	C2	C2	C2	C2/D1	C2/D1

Type code	P15K	P18K	P22K	P30K	P37K	P45K	P55K	P75K
IP66/Type 4X [2]	–	–	–	–	–	–	–	–
Rated output current								
Continuous (525–550 V) [A]	23	28	36	41	54	65	87/90	105/113
Intermittent overload (525–550 V) [A]	25.3	30.8	39.6	47.3	59.4	71.5	95.7/99	115.5/124
Continuous (551–690 V) [A]	22	27	34	41	52	62	83/86	100/108
Intermittent overload (551–690 V) [A]	24.2	29.7	37.4	45.1	57.2	68.2	91.3/95	110/119
Continuous apparent power (1.1–45 kW @525 V, 55–75 kW @575 V) [kVA]	20.9	25.5	32.7	37.3	51.4	61.9	82.9/86	100/108
Continuous apparent power (@690 V) [kVA]	26.3	32.2	40.6	49	62.1	74.1	99.2/103	119.5/129
Maximum input current								
Continuous (525–550 V) [A]	22.2	27	34.7	39.5	52	62.6	87/89	99/110
Intermittent overload (525–550 V) [A]	24.4	29.7	38.2	43.5	57.2	68.9	95.7/97.9	108.9/121
Continuous (551–690 V) [A]	21.2	26	32.8	39.5	50.1	59.8	86/87	-/109
Intermittent overload (551–690 V) [A]	23.3	28.6	36	43.5	55.1	65.7	94.6/95.7	-/119.9
More specifications								
Power loss at rated maximum load estimated [3] [W]	300	370	440	740	900	1100	1500	1800
Efficiency at rated output current [4]	0.98	0.98	0.98	0.98	0.98	0.98	0.98	0.98

[1] *Enclosure size A1 is only available as FC 301.*

[2] *Enclosure size A4 is only available without C and D options, or without C option but with backplate.*

[3] *Applies to dimensioning of drive cooling. If the switching frequency is higher than the default setting, the power losses may increase. LCP and typical control card power consumption is included. For power loss data according to IEC 61800-9-2, and EN 50598-2, refer to http://ecosmart.danfoss.com/.*

[4] *For energy efficiency class, see 8.5 Ambient Conditions. For part load losses, see http://ecosmart.danfoss.com/.*

8.2.5 Power Cable Cross-sections

Table 44: Maximum Cable Cross-section [mm² (AWG)]

Enclosure	Mains	Motor	Brake	Loadshare	Disconnect
A1	4(12)	4(12)	4(12)	4(12)	4(12)
A2	4(12)	4(12)	4(12)	4(12)	4(12)
A3	4(12)	4(12)	4(12)	4(12)	4(12)
A4	4(12)	4(12)	4(12)	4(12)	4(12)
A5	4(12)	4(12)	4(12)	4(12)	4(12)
B1	10(7)	10(7)	10(7)	10(7)	10(7)
B2	35(2)	35(2)	35(2)	35(2)	35(2)
B3	10(7)	10(7)	10(7)	10(7)	10(7)
B4	35(2)	35(2)	35(2)	35(2)	35(2)

Enclosure	Mains	Motor	Brake	Loadshare	Disconnect
C1	50(1/0)	50(1/0)	50(1/0)	50(1/0)	50(1/0)
C2	95(4/0)	95(4/0)	95(4/0)	95(4/0)	95(4/0)
C3	50(1/0)	50(1/0)	50(1/0)	50(1/0)	50(1/0)
C4	95(4/0)	95(4/0)	95(4/0)	95(4/0)	95(4/0)
D1h [(1) (2)]	2 x 95(3/0)	2 x 95(3/0)	2 x 95(3/0)	2 x 95(3/0)	N/A [(2)]
D3h [(1) (2)]	2 x 95(3/0)	2 x 95(3/0)	2 x 95(3/0)	2 x 95(3/0)	N/A [(2)]

[1] *Two wires per terminal.*

[2] *Details, see separate design guide VLT® AutomationDrive FC 301/FC 302 90–710 kW*

8.3 Mains Supply

Mains supply

Supply terminals (6-pulse)	L1, L2, L3
Supply terminals (12-pulse)	L1-1, L2-1, L3-1, L1-2, L2-2, L3-2
Supply voltage [(1) (2)]	200–240 V ±10%
Supply voltage [(1) (2)]	FC 301: 380–480 V/FC 302: 380–500 V ±10%
Supply voltage [(1) (2)]	FC 302: 525–600 V ±10%
Supply voltage [(1) (2)]	FC 302: 525–690 V ±10%
Supply frequency	50/60 Hz ±5%
Maximum imbalance temporary between mains phases	3.0% of rated supply voltage
True power factor (λ)	≥0.9 nominal at rated load
Displacement power factor (cos Φ)	Near unity (>0.98)
Switching on the input supply L1, L2, L3 (power-ups) ≤7.5 kW (10 hp)	Maximum twice per minute
Switching on input supply L1, L2, L3 (power-ups) 11–75 kW (15–101 hp)	Maximum once per minute
Switching on input supply L1, L2, L3 (power-ups) ≥90 kW (121 hp)	Maximum once per 2 minutes
Environment according to EN60664-1	Overvoltage category III/pollution degree 2

[1] *Mains voltage low/mains dropout: During low mains voltage or a mains dropout, the drive continues until the DC-link voltage drops below the minimum stop level, which typically corresponds to 15% below the drive's lowest rated supply voltage. Power-up and full torque cannot be exptected at mains voltage lower than 10% below the drive's lowest rated supply voltage.*

[2] *The unit is suitable for use on a circuit capable of delivering not more than 100000 RMS symmetrical Amperes, 240/500/600/690 V maximum.*

8.4 Motor Output and Motor Data

8.4.1 Motor Output (U, V, W)

Motor output (U, V, W)

Output voltage	0–100% of supply voltage
Output frequency	0–590 Hz [(1)]
Output frequency in flux mode	0–300 Hz
Switching on output	Unlimited

Ramp times	0.01–3600 s

[1] *Dependent on voltage and power.*

8.4.2 Torque Characteristics

Torque characteristics

Starting torque (constant torque)	Maximum 160% for 60 s [(1)] once in 10 minutes
Starting/overload torque (variable torque)	Maximum 110% up to 0.5 s [(1)] once in 10 minutes
Torque rise time in flux (for 5 KHz f_{sw})	1 ms
Torque rise time in VVC+ (independent of f_{sw})	10 ms

[1] *Percentage relates to the nominal torque*

8.5 Ambient Conditions

Enclosure	IP20/Chassis, IP21/Type 1, IP54/Type 12
Vibration test (standard/ruggedized)	0.7 g/1.0 g
Relative humidty	5%-95% (IEC 721-3-3; Class 3K3 (non-condensing) during operation)
Aggressive environment (IEC 60068-2-43) H_2S test	Class Kd
Aggressive gases (IEC 60721-3-3)	Class 3C3
Test method according to IEC 60068-2-43	H2S (10 days)
Ambient temperature (at SFAVM switching mode)	
- with derating	Maximum 55° C (131° F) [(1)]
- with full output power of typical EFF2 motors (up to 90% output current)	Maximum 50° C (122° F) [(1)]
- at full continuous FC output current	Maximum 45° C (113° F) [(1)]
Minimum ambient temperature during full-scale operation	0 °C (32 °F)
Minimum ambient temperature at reduced speed performance	-10 °C (14 °F)
Temperature during storage/transport	-25 to +65/70 °C (-13 to +149/158 °F)
Maximum altitude above sea level without derating	1000 m (3280 ft)
Maximum altitude above sea level with derating	3000 m (9842 ft)
EMC standards, Emission	IEC/EN 61800-3
EMC standards, Immunity	IEC/EN 61800-3
Energy efficiency class	IE2 [(2)]

[1] *For more information, see the Derating section in the Design Guide.*

[2] *Determined according to IEC 61800-9-2 (EN 50598-2) at:*

- *Rated load.*
- *90% rated frequency.*
- *Switching frequency factory setting.*
- *Switching pattern factory setting.*

8.6 Cable Specifications

8.6.1 Cable Lengths and Cross-sections for Control Cables

Cable lengths and cross-sections for control cables	
Maximum motor cable length, shielded	FC 301: 50 m (164 ft)/FC 302: 150 m (492 ft)
Maximum motor cable length, unshielded	FC 301: 75 m (246 ft)/FC 302: 300 m (984 ft)
Maximum cross-section to control terminals, flexible/rigid wire without cable end sleeves	1.5 mm^2/16 AWG
Maximum cross-section to control terminals, flexible wire with cable end sleeves	1 mm^2/18 AWG
Maximum cross-section to control terminals, flexible wire with cable end sleeves with collar	0.5 mm^2/20 AWG
Minimum cross-section to control terminals	0.25 mm^2/24 AWG

For power cables cross-sections, see 8.2.5 Power Cable Cross-sections.

8.7 Control Input/Output and Control Data

8.7.1 Digital Inputs

Digital inputs	
Programmable digital inputs	FC 301: 4 (5) [1] /FC 302: 4 (6) [1]
Terminal number	18, 19, 27 [1], 29 [1], 32, 33
Logic	PNP or NPN
Voltage level	0–24 V DC
Voltage level, logic 0 PNP	<5 V DC
Voltage level, logic 1, PNP	>10 V DC
Voltage level, logic 0 NPN [2]	>19 V DC
Voltage level, logic 1 NPN [2]	<14 V DC
Maximum voltage on input	28 V DC
Pulse frequency range	0–110 kHz
(Duty cycle) minimum pulse width	4.5 ms
Input resistance, R_i	Approximately 4 kΩ

[1] *Terminals 27 and 29 can also be programmed as output.*

[2] *Except STO input terminal 37.*

8.7.2 STO Terminal 37

STO terminal 37 (terminal 37 is fixed PNP logic)	
Voltage level	0–24 V DC
Voltage level, logic 0 PNP	<4 V DC
Voltage level, logic 1 PNP	>20 V DC
Maximum voltage on input	28 V DC
Typical input current at 24 V	50 mA rms
Typical input current at 20 V	60 mA rms

Input capacitance	400 nF

All digital inputs are galvanically isolated from the supply voltage (PELV) and other high-voltage terminals.

When using a contactor with a DC coil inside in combination with STO, it is important to make a return way for the current from the coil when turning it off. This can be done by using a freewheel diode (or, alternatively, a 30 V or 50 V MOV for quicker response time) across the coil. Typical contactors can be bought with this diode.

8.7.3 Analog Inputs

Analog inputs

Number of analog inputs	2
Terminal number	53, 54
Modes	Voltage or current
Mode select	Switch S201 and switch S202
Voltage mode	Switch S201/switch S202 = OFF (U)
Voltage level	-10 V to +10 V (scaleable)
Input resistance, R_i	Approximately 10 kΩ
Maximum voltage	±20 V
Current mode	Switch S201/S202 = ON (I)
Current level	0/4 to 20 mA (scaleable)
Input resistance, R_i	Approximately 200 Ω
Maximum current	30 mA
Resolution for analog inputs	10 bit (+ sign)
Accuracy of analog inputs	Maximum error 0.5% of full scale
Bandwidth	100 Hz

The analog inputs are galvanically isolated from the supply voltage (PELV) and other high-voltage terminals.

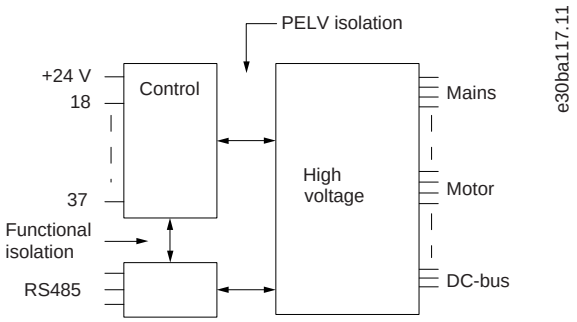

Illustration 52: PELV Isolation

8.7.4 Pulse/Encoder Inputs

Pulse/encoder inputs

Programmable pulse/encoder inputs	2/1
Terminal number pulse/encoder	29 (1), 33 (2) /32 (3), 33 (3)

Maximum frequency at terminals 29, 32, 33	110 kHz (Push-pull driven)
Maximum frequency at terminals 29, 32, 33	5 kHz (Open collector)
Maximum frequency at terminals 29, 32, 33	4 Hz
Voltage level	See .
Maximum voltage on input	28 V DC
Input resistance, R_i	Approximately 4 kΩ
Pulse input accuracy (0.1–1 kHz)	Maximum error: 0.1% of full scale
Encoder input accuracy (1–11 kHz)	Maximum error: 0.05% of full scale

[1] *FC 302 only.*

[2] *Pulse inputs are 29 and 33.*

[3] *Encoder inputs: 32=A, 33=B.*

The pulse and encoder inputs (terminals 29, 32, 33) are galvanically isolated from the supply voltage (PELV) and other high-voltage terminals.

8.7.5 Digital Outputs

Digital outputs

Programmable digital/pulse outputs	2
Terminal number	27, 29 [(1)]
Voltage level at digital/frequency output	0–24 V
Maximum output current (sink or source)	40 mA
Maximum load at frequency output	1 kΩ
Maximum capacitive load at frequency output	10 nF
Minimum output frequency at frequency output	0 Hz
Maximum output frequency at frequency output	32 kHz
Accuracy of frequency output	Maximum error: 0.1% of full scale
Resolution of frequency outputs	12 bit

[1] *Terminals 27 and 29 can also be programmed as input.*

The digital output is galvanically isolated from the supply voltage (PELV) and other high-voltage terminals.

8.7.6 Analog Output

Analog output

Number of programmable outputs	1
Terminal number	42
Current range at analog output	0/4 to 20 mA
Maximum load GND - analog output less than	500 Ω
Accuracy on analog output	Maximum error: 0.5% of full scale
Resolution of analog output	12 bit

The analog output is galvanically isolated from the supply voltage (PELV) and other high-voltage terminals.

8.7.7 Control Card, 24 V DC Output

Control card, 24 V DC output

Terminal number	12, 13
Output voltage	24 V +1, -3 V
Maximum load	200 mA

The 24 V DC supply is galvanically isolated from the supply voltage (PELV), but has the same potential as the analog and digital inputs and outputs.

8.7.8 Control Card, +10 V DC Output

Control card, +10 V DC output

Terminal number	50
Output voltage	10.5 V ±0.5 V
Maximum load	15 mA

The 10 V DC supply is galvanically isolated from the supply voltage (PELV) and other high-voltage terminals.

8.7.9 Control Card, RS485 Serial Communication

Control card, RS485 serial communication

Terminal number	68 (P,TX+, RX+), 69 (N,TX-, RX-)
Terminal number 61	Common for terminals 68 and 69

The RS485 serial communication circuit is galvanically isolated from the supply voltage (PELV).

8.7.10 Control Card, USB Serial Communication

Control card, USB serial communication

USB standard	1.1 (full speed)
USB plug	USB type B plug

Connection to the PC is carried out via a standard host/device USB cable.

The USB connection is galvanically isolated from the supply voltage (PELV) and other high-voltage terminals.

The USB ground connection is not galvanically isolated from protective earth. Use only an isolated laptop as PC connection to the USB connector on the drive.

8.7.11 Relay Outputs

Relay outputs

Programmable relay outputs	FC 301 all kW: 1/FC 302 all kW: 2
Relay 01 terminal number	1–3 (break), 1–2 (make)
Maximum terminal load (AC-1) [(1)] on 1–3 (NC), 1–2 (NO) (resistive load)	240 V AC, 2 A
Maximum terminal load (AC-15) [(1)] (inductive load @ cosφ 0.4)	240 V AC, 0.2 A

Maximum terminal load (DC-1) [1] on 1–2 (NO), 1–3 (NC) (resistive load)	60 V DC, 1 A
Maximum terminal load (DC-13) [1] (inductive load)	24 V DC, 0.1 A
Relay 02 (FC 302 only) terminal number	4–6 (break), 4–5 (make)
Maximum terminal load (AC-1) [1] on 4–5 (NO) (resistive load) [1] [1]	400 V AC, 2 A
Maximum terminal load (AC-15) [1] on 4–5 (NO) (inductive load @ cosφ 0.4)	240 V AC, 0.2 A
Maximum terminal load (DC-1) [1] on 4–5 (NO) (resistive load)	80 V DC, 2 A
Maximum terminal load (DC-13) [1] on 4–5 (NO) (inductive load)	24 V DC, 0.1 A
Maximum terminal load (AC-1) [1] on 4–6 (NC) (resistive load)	240 V AC, 2 A
Maximum terminal load (AC-15) [1] on 4–6 (NC) (inductive load @ cosφ 0.4)	240 V AC, 0.2 A
Maximum terminal load (DC-1) [1] on 4–6 (NC) (resistive load)	50 V DC, 2 A
Maximum terminal load (DC-13) [1] on 4–6 (NC) (inductive load)	24 V DC, 0.1 A
Minimum terminal load on 1–3 (NC), 1–2 (NO), 4–6 (NC), 4–5 (NO)	24 V DC 10 mA, 24 V AC 20 mA
Environment according to EN 60664-1	Overvoltage category III/pollution degree 2

[1] *IEC 60947 parts 4 and 5. The relay contacts are galvanically isolated from the rest of the circuit by reinforced isolation (PELV)*

Overvoltage Category II

UL applications 300 V AC 2 A.

8.7.12 Control Card Performance

Control card performance

Scan interval	1 ms

8.7.13 Control Characteristics

Control characteristics

Resolution of output frequency at 0–590 Hz	±0.003 Hz
Repeat accuracy of precise start/stop (terminals 18, 19)	≤±0.1 ms
System response time (terminals 18, 19, 27, 29, 32, 33)	≤2 ms
Speed control range (open loop)	1:100 of synchronous speed
Speed control range (closed loop)	1:1000 of synchronous speed
Speed accuracy (open loop)	30–4000 RPM: Error ±8 RPM
Speed accuracy (closed loop), depending on resolution of feedback device	0–6000 RPM: Error ±0.15 RPM
Torque control accuracy (speed feedback)	Maximum error ±5% of rated torque

All control characteristics are based on a 4-pole asynchroneous motor.

8.8 Connection Tightening Torques

Table 45: Tightening Torque for Cables

Enclosure size	200–240 V [kW (hp)]	380–500 V [kW (hp)]	525–690 V [kW (hp)]	Purpose	Tightening torque [Nm] ([in-lb])
A2	0.25–2.2 (0.34–3.0)	0.37–4 (0.5– 5.0)	–	Mains, brake resistor, load sharing, motor cables.	0.5–0.6 (4.4–5.3)
A3	3–3.7 (4.0– 5.0)	5.5–7.5 (7.5–10.0)	1.1–7.5 (1.5–10.0)		
A4	0.25–2.2 (0.34–3.0)	0.37–4 (0.5– 5.0)	–		
A5	3–3.7 (4.0– 5.0)	5.5–7.5 (7.5–10.0)	–		
B1	5.5–7.5 (7.5–10.0)	11–15 (15-20)	–	Mains, brake resistor, load sharing, motor cables.	1.8 (15.9)
				Relay.	0.5–0.6 (4.4–5.3)
				Ground.	2–3 (17.7–26.6)
B2	18.5–22 (25–30)	11–22 (15– 30)	11–22 (15– 30)	Mains, brake resistor, load sharing cables.	4.5 (39.8)
				Motor cables.	4.5 (39.8)
				Relay.	0.5–0.6 (4.4–5.3)
				Ground.	2–3 (17.7–26.6)
B3	5.5–7.5 (7.5–10.0)	11–15 (15-20)	–	Mains, brake resistor, load sharing, motor cables.	1.8 (15.9)
				Relay.	0.5–0.6 (4.4–5.3)
				Ground.	2–3 (17.7–26.6)
B4	11–15 (15-20)	18.5–30 (25–40)	11–30 (15-40)	Mains, brake resistor, load sharing, motor cables.	4.5 (39.8)
				Relay.	0.5–0.6 (4.4–5.3)
				Ground.	2–3 (17.7–26.6)
C1	15–22 (20– 30)	30–45 (40– 60)	–	Mains, brake resistor, load sharing cables.	10 (89)
				Motor cables.	10 (89)
				Relay.	0.5–0.6 (4.4–5.3)
				Ground.	2–3 (17.7–26.6)
C2	30–37 (40– 50)	55–75 (75– 100)	30–75 (40– 100)	Mains, motor cables.	14 (124) (up to 95 mm^2 (3 AWG)) 24 (212) (over 95 mm^2 (3 AWG))
				Load sharing, brake cables.	14 (124)
				Relay.	0.5–0.6 (4.4–5.3)
				Ground.	2–3 (17.7–26.6)

Enclosure size	200–240 V [kW (hp)]	380–500 V [kW (hp)]	525–690 V [kW (hp)]	Purpose	Tightening torque [Nm] ([in-lb])
C3	18.5–22 (25–30)	30–37 (40– 50)	37–45 (50– 60)	Mains, brake resistor, load sharing, motor cables.	10 (89)
				Relay.	0.5–0.6 (4.4–5.3)
				Ground.	2–3 (17.7–26.6)
C4	37–45 (50– 60)	55–75 (75– 100)	11–22 (15-30)	Mains, motor cables.	14 (124) (up to 95 mm^2 (3 AWG)) 24 (212) (over 95 mm^2 (3 AWG))
				Load sharing, brake cables.	14 (124)
				Relay.	0.5–0.6 (4.4–5.3)
				Ground.	2–3 (17.7–26.6)

8.9 Power Ratings, Weight, and Dimensions

Table 46: Power Ratings, Weight, and Dimensions, Enclosure Size A

Enclosure size		A1	A2		A3		A4	A5
Rated power [kW (hp)]	**200–240 V**	**0.25–1.5 (0.34–2)**	**0.25–2.2 (0.34–3)**		**3–3.7 (4–5)**		**0.25–2.2 (0.34–3)**	**0.25–3.7 (0.34–5)**
	380-480/500 V	**0.37–1.5 (0.5–2)**	**0.37–4 (0.5–5)**		**5.5–7.5 (7.5–10)**		**0.37–4 (0.5–5)**	**0.37–7.5 (0.5–10)**
	525–600 V	**–**	**–**		**0.75–7.5 (1–10)**		**–**	**0.75–7.5 (1–10)**
	525–690 V	**–**	**–**		**1.1–7.5 (1.5–10)**		**–**	**–**
IP **NEMA**	**–**	**20** **Chassis**	**20** **Chassis**	**21** **Type 1**	**20** **Chassis**	**21** **Type 1**	**55/66** **Type 12/4X**	**55/66** **Type 12/4X**
Height [mm (in)]								
Height of mounting plate	A [(1)]	200 (7.9)	268 (10.6)	375 (14.8)	268 (10.6)	375 (14.8)	390 (15.4)	420 (16.5)
Height with ground termination plate for fieldbus cables	A	316 (12.4)	374 (14.7)	–	374 (14.7)	–	–	–
Distance between mounting holes	a	190 (7.5)	257 (10.1)	350 (13.8)	257 (10.1)	350 (13.8)	401 (15.8)	402 (15.8)
Width [mm (in)]								
Width of mounting plate	B	75 (3)	90 (3.5)	90 (3.5)	130 (5.1)	130 (5.1)	200 (7.9)	242 (9.5)

Enclosure size		A1	A2		A3		A4	A5
Width of mounting plate with 1 C option	B	–	130 (5.1)	130 (5.1)	170 (6.7)	170 (6.7)	–	242 (9.5)
Width of mounting plate with 2 C options	B	–	150 (5.9)	150 (5.9)	190 (7.5)	190 (7.5)	–	242 (9.5)
Distance between mounting holes	b	60 (2.4)	70 (2.8)	70 (2.8)	110 (4.3)	110 (4.3)	171 (6.7)	215 (8.5)
Depth [mm (in)]								
Depth without option A/B	C	207 (8.1)	205 (8.1)	207 (8.1)	205 (8.1)	207 (8.1)	175 (6.9)	200 (7.9)
With option A/B	C	222 (8.7)	220 (8.7)	222 (8.7)	220 (8.7)	222 (8.7)	175 (6.9)	200 (7.9)
Screw holes [mm (in)]								
	c	6.0 (0.24)	8.0 (0.31)	8.0 (0.31)	8.0 (0.31)	8.0 (0.31)	8.25 (0.32)	8.25 (0.32)
	d	ø8 (ø0.31)	ø11 (ø0.43)	ø11 (ø0.43)	ø11 (ø0.43)	ø11 (ø0.43)	ø12 (ø0.47)	ø12 (ø0.47)
	e	ø5 (ø0.2)	ø5.5 (ø0.22)	ø5.5 (ø0.22)	ø5.5 (ø0.22)	ø5.5 (ø0.22)	ø6.5 (ø0.26)	ø6.5 (ø0.26)
	f	5 (0.2)	9 (0.35)	9 (0.35)	6.5 (0.26)	6.5 (0.26)	6 (0.24)	9 (0.35)
Maximum weight [kg (lb)]		2.7 (6)	4.9 (10.8)	5.3 (11.7)	6.6 (14.6)	7 (15.4)	9.7 (21.4)	13.5/14.2 (30/31)
Front cover tightening torque [Nm (in-lb)]								
Plastic cover (low IP)		Click	Click		Click		–	–
Metal cover (IP55/66)		–	–		–		1.5 (13.3)	1.5 (13.3)

[1] *See illustration 53 and illustration 54.*

Table 47: Power Ratings, Weight, and Dimensions, Enclosure Size B

Enclosure size			B1	B2	B3	B4
Rated power [kW (hp)]	**200–240 V**		**5.5–7.5 (7.5–10)**	**15**	**5.5–7.5 (7.5–10)**	**11–15 (15–20)**
	380-480/500 V		**11–15 (15–20)**	**18.5–22 (25–30)**	**11–15 (15–20)**	**18.5–30 (25–40)**
	525–600 V		**11–15 (15–20)**	**18.5–22 (25–30)**	**11–15 (15–20)**	**18.5–30 (25–40)**
	525–690 V		**–**	**11–22 (15–30)**	**–**	**11–30 (15–40)**
IP **NEMA**	**–**		**21/55/66** **Type 1/12/4X**	**21/55/66** **Type 1/12/4X**	**20** **Chassis**	**20** **Chassis**
Height [mm (in)]						
Height of mounting plate		A [1]	480 (18.9)	650 (25.6)	399 (15.7)	520 (20.5)

Enclosure size		B1	B2	B3	B4
Height with ground termination plate for fieldbus cables	A	–	–	420 (16.5)	595 (23.4)
Distance between mounting holes	a	454 (17.9)	624 (24.6)	380 (15)	495 (19.5)
Width [mm (in)]					
Width of mounting plate	B	242 (9.5)	242 (9.5)	165 (6.5)	230 (9.1)
Width of mounting plate with 1 C option	B	242 (9.5)	242 (9.5)	205 (8.1)	230 (9.1)
Width of mounting plate with 2 C options	B	242 (9.5)	242 (9.5)	225 (8.9)	230 (9.1
Distance between mounting holes	b	210 (8.3)	210 (8.3)	140 (5.5)	200 (7.9)
Depth [mm (in)]					
Depth without option A/B	C	260 (10.2)	260 (10.2)	249 (9.8)	242 (9.5)
With option A/B	C	260 (10.2)	260 (10.2)	262 (10.3)	242 (9.5)
Screw holes [mm (in)]					
	c	12 (0.47)	12 (0.47)	8 (0.31)	–
	d	ø19 (ø0.75)	ø19 (ø0.75)	12 (0.47)	–
	e	ø9 (ø0.35)	ø9 (ø0.35)	6.8 (0.27)	8.5 (0.33)
	f	9 (0.35)	9 (0.35)	7.9 (0.31)	15 (0.59)
Maximum weight [kg (lb)]		23 (51)	27 (60)	12 (26.5)	23.5 (52)
Front cover tightening torque [Nm (in-lb)]					
Plastic cover (low IP)		Click	Click	Click	Click
Metal cover (IP55/66)		2.2 (19.5)	2.2 (19.5)	–	–

[1] *See illustration 53 and illustration 54.*

Table 48: Power Ratings, Weight, and Dimensions, Enclosure Sizes C & D

Enclosure size		C1	C2	C3	C4	D3h
Rated power [kW (hp)]	**200–240 V**	**15–22 (20–30)**	**30–37 (40–50)**	**18.5–22 (25–30)**	**30–37 (40–50)**	**–**
	380-480/500 V	**30–45 (40–60)**	**55–75 (75–100)**	**37–45 (50–60)**	**55–75 (75–100)**	**–**
	525–600 V	**30–45 (40–60)**	**55–90 (75–125)**	**37–45 (50–60)**	**55–90 (75–125)**	**–**
	525–690 V	**–**	**30–75 (40–100)**	**37–45 (50–60)**	**37–45 (50–60)**	**55–75 (75– 100)**
IP **NEMA**	–	**21/55/66** **Type 1/12/4X**	**21/55/66** **Type 1/12/4X**	**20** **Chassis**	**20** **Chassis**	**20** **Chassis**
Height [mm (in)]						
Height of mounting plate	A [1]	680 (26.8)	770 (30.3)	550 (21.7)	660 (26)	909 (35.8)

Enclosure size		C1	C2	C3	C4	D3h
Height with ground termination plate for fieldbus cables	A	–	–	630 (24.8)	800 (31.5)	–
Distance between mounting holes	a	648 (25.5)	739 (29.1)	521 (20.5)	631 (24.8)	–
Width [mm (in)]						
Width of mounting plate	B	308 (12.1)	370 (14.6)	308 (12.1)	370 (14.6)	250 (9.8)
Width of mounting plate with 1 C option	B	308 (12.1)	370 (14.6)	308 (12.1)	370 (14.6)	–
Width of mounting plate with 2 C options	B	308 (12.1)	370 (14.6)	308 (12.1)	370 (14.6)	–
Distance between mounting holes	b	272 (10.7)	334 (13.1)	270 (10.6)	330 (13)	–
Depth [mm (in)]						
Depth without option A/B	C	310 (12.2)	335 (13.2)	333 (13.1)	333 (13.1)	375 (14.8)
With option A/B	C	310 (12.2)	335 (13.2)	333 (13.1)	333 (13.1)	375 (14.8)
Screw holes [mm (in)]						
	c	12.5 (0.49)	12.5 (0.49)	–	–	–
	d	ø19 (ø0.75)	ø19 (ø0.75)	–	–	–
	e	ø9 (ø0.35)	ø9 (ø0.35)	8.5 (0.33)	8.5 (0.33)	–
	f	9.8 (0.39)	9.8 (0.39)	17 (0.67)	17 (0.67)	–
Maximum weight [kg (lb)]		45 (99)	65 (143)	35 (77)	50 (110)	62 (137)
Front cover tightening torque [Nm (in-lb)]						
Plastic cover (low IP)		Click	Click	2 (17.7)	2 (17.7)	–
Metal cover (IP55/66)		2.2 (19.5)	2.2 (19.5)	2 (17.7)	2 (17.7)	–

[1] *See illustration 53 and illustration 54.*

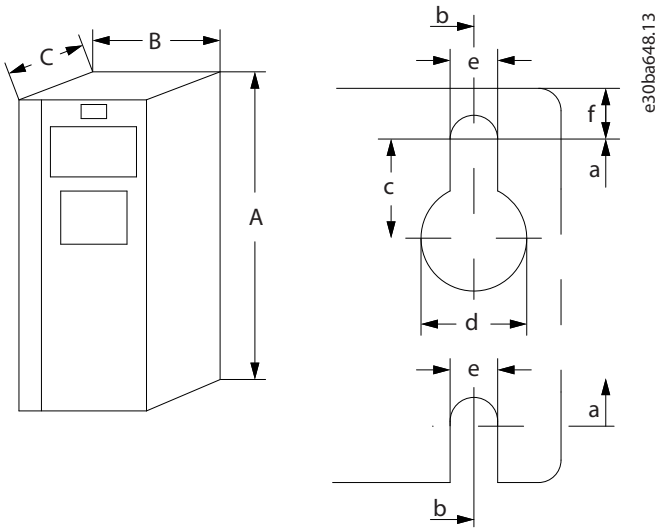

Illustration 53: Top and Bottom Mounting Holes

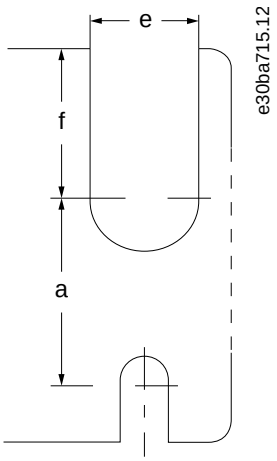

Illustration 54: Top and Bottom Mounting Holes, Enclosure Sizes B4, C3, and C4

9 Mechanical Installation Considerations

9.1 Storage

Store the drive in a dry location and keep the equipment sealed in its packaging until installation. Periodic forming (capacitor charging) is not necessary during storage unless storage exceeds 12 months.

If shelf life is longer than 4 years, a simple method, under no load conditions, can be used to check the conditions of the capacitors.

If the stable DC-link voltage is approximately equal to 1.41 x U_{mains}, the capacitors are OK. To check the DC-link voltage in the drive, either measure it or check the corresponding parameters in the display.

If the DC-link voltage is significantly smaller than 1.41 x U_{mains}, it takes time for the capacitors to recover. If the DC-link voltage stays at a low level and does not reach approximately 1.41 x U_{mains} , contact the local service agent.

9.2 Operating Environment

In environments with airborne liquids, particles, or corrosive gases, ensure that the IP/Type rating of the equipment matches the installation environment. For specifications regarding ambient conditions, see the Ambient Conditions section.

NOTICE

CONDENSATION

Moisture can condense on the electronic components and cause short circuits. Avoid installation in areas subject to frost. Install an optional space heater when the drive is colder than the ambient air. Operating in standby mode reduces the risk of condensation as long as the power dissipation keeps the circuitry free of moisture.

NOTICE

EXTREME AMBIENT CONDITIONS

Hot or cold temperatures compromise unit performance and longevity.

- Do not operate in environments where the ambient temperature exceeds 55 °C (131 °F).
- The drive can operate at temperatures down to -10 °C (14 °F). However, proper operation at rated load is only guaranteed at 0 °C (32 °F) or higher.
- If the temperature exceeds ambient temperature limits, extra air conditioning of the cabinet or installation site is required.

9.2.1 Gases

Aggressive gases, such as hydrogen sulfide, chlorine, or ammonia can damage electrical and mechanical components of a drive. Contamination of the cooling air can also cause the gradual decomposition of PCB tracks and door seals. Aggressive contaminants are often present in sewage treatment plants or swimming pools. A clear sign of an aggressive atmosphere is corroded copper.

In aggressive atmospheres, restricted IP enclosures are recommended along with conformal-coated circuit boards.

NOTICE

The drive comes standard with class 3C2 coating. On request, class 3C3 coating is available.

Table 49: Conformal Coating Class Ratings

Gas type	Unit	Class				
		3C1	3C2		3C3	
		–	Average value	Maximum value [1]	Average value	Maximum value [1]
Sea salt	n/a	None	Salt mist		Salt mist	
Sulfur oxide	mg/m^3	0.1	0.3	1.0	5.0	10
Hydrogen sulfide	mg/m^3	0.01	0.1	0.5	3.0	10
Chlorine	mg/m^3	0.0.1	0.1	0.03	0.3	1.0
Hydrogen chloride	mg/m^3	0.01	0.1	0.5	1.0	5.0
Hydrogen fluoride	mg/m^3	0.003	0.001	0.03	0.1	3.0
Ammonia	mg/m^3	0.3	1.0	3.0	10	35
Ozone	mg/m^3	0.01	0.05	0.1	0.1	0.3
Nitrogen	mg/m^3	0.1	0.5	1.0	3.0	9.0

[1] *Maximum values are transient peak values and are not to exceed 30 minutes per day.*

9.2.2 Dust

Installation of drives in environments with high dust exposure is often unavoidable. Dust affects wall or frame-mounted units with IP55 or IP66 protection rating and cabinet-mounted units with IP21 or IP20 protection rating. Consider the following when installing drives in such environments:

- Reduced cooling.
- Cooling fans.
- Filters.
- Periodic maintenance.

Reduced cooling

Dust forms deposits on the surface of the device and inside on the circuit boards and the electronic components. These deposits act as insulation layers and hamper heat transfer to the ambient air, reducing the cooling capacity. The components become warmer. This causes accelerated aging of the electronic components and the service life of the unit decreases. Dust deposits on the heat sink in the back of the unit also decrease the service life of the unit.

Cooling fans

The airflow for cooling the unit is produced by cooling fans, usually on the back of the unit. The fan rotors have small bearings into which dust can penetrate and act as an abrasive. This leads to bearing damage and fan failure.

Filters

High-power drives are equipped with cooling fans that expel hot air from the interior of the unit. Above a certain size, these fans are fitted with filter mats. These filters can quickly become clogged when used in dusty environments. Preventive measures are necessary under these conditions.

Periodic maintenance

Under the conditions described above, it is recommended to clean the drive during periodic maintenance. Remove dust from the heat sink and fans, and clean the filter mats.

9.2.3 Outdoor Installation in freezing Temperature Environments

NOTICE

LIMITATIONS

If the drive is used daily at low temperatures, lifetime of the mains disconnect switch can be reduced. If advice in this section is not followed, lifetime of the drive can be reduced.

- For cold starts at temperatures between -10°C and -25°C, it is recommended to let the drive run in idle for 30 minutes before loading it.
- LCP @-20°C: After cold start, reasonable readability is typically reached after 5–10 s. Change of readout also takes 5–10 s.
- LCP @-25°C: The LCP may have a weak readout at start-up. Normal readout is normally reached within 5 minutes. Change of readout takes 5–10 s
- ATEX: Approved down to -20°C
- Usage of option VLT® 24 V DC Supply Option MCB 107: Instability issues can be expected outside normal operating range for the drive (-10°C to +45/50°C), despite the option is the drive.
- For harsh environments, for example salt mist, using IP66/Type 4X drive configuration is recommended.

Under certain circumstances VLT® FC-series drives in IP55/66 and Type3R/4X configuration can be used for outdoor installation down to -25°C. This applies to the following drives:

- VLT® AutomationDrive FC 301/302
- VLT® AQUA Drive FC 202
- VLT® Refrigeration Drive FC 103
- VLT® HVAC Drive FC 102

To facilitate outdoor installation, condensing liquid inside the drive has to be prevented. This section outlines the conditions under which outdoor usage of the drive is permitted:

- Ensure drive temperature, through:
  - Keeping the drive always powered on for temperatures below 0°C.
  - Keeping the drive running at maximum 50% load for minimum 10 minutes before increasing to full load for temperatures below -10°C/14°F.
- Shield the drive against direct sunlight, preferably by using the weather shield provided by Danfoss. The weather shield is designed to provide more protection of outdoor rated drives, when there is a risk of snow collecting on the top of the drive or excessive rain, which could subcool the drive, leading to internal condensation. The weather shield is made of corrosion resistant stainless steel AISI316 and is also suitable for installation in coastal areas and marine environments.
- Using DC hold keeps the temperature at a level where condensation does not form. This function can be activated in parameter 1–80. This selection makes sure that no condensation takes place in the drive as long as the drive is powered on. Furthermore, it keeps condensation out of the motor.
- **For temperatures from 0°C to –10°C:** Set the fan control to low-temperature environment setting in parameter 14–52 to switch off the heat sink fan and therefore the external fan. This adjusts the fan control to the cold environment to prevent the negative effect from further cooling and triggering a false alarm.
- **For temperatures below –20°C:** Set the fan control to low-temperature environment setting in parameter 14–52 to switch off the heat sink fan and therefore the external fan. This adjusts the fan control to the cold environment to prevent the negative effect from further cooling and triggering a false alarm. Disable parameter 14–53. This prevents warnings to be issued falsely due to cold temperatures.

9.2.4 Potentially Explosive Atmospheres

⚠ WARNING ⚠

EXPLOSIVE ATMOSPHERE

Installing the drive in a potentially explosive atmosphere can lead to death, personal injury, or property damage.

- Install the unit in a cabinet outside of the potentially explosive area.
- Use a motor with an appropriate ATEX protection class.
- Install a PTC temperature sensor to monitor the motor temperature.
- Install short motor cables.
- Use sine-wave output filters when shielded motor cables are not used.

As required by the EU Directive 2014/34/EU, any electrical or electronic device intended for use in an environment with a potentially explosive mixture of air, flammable gas, or dust must be ATEX-certified. Systems operated in this environment must fulfill the following special conditions to comply with the ATEX protection class:

Motors with class d protection

Does not require approval. Special wiring and containment are required.

Motors with class e or class n protection

When combined with an ATEX-approved PTC monitoring device like the VLT® PTC Thermistor Card MCB 112, installation does not need an individual approval from an approbated organization.

Motors with class d/e protection

The motor itself has an e ignition protection class, while the motor cabling and connection environment is in compliance with the d classification. To attenuate the high peak voltage, use a sine-wave filter at the drive output.

NOTICE

MOTOR THERMISTOR SENSOR MONITORING

VLT® AutomationDrive units with the VLT® PTC Thermistor Card MCB 112 option are PTB-certified for potentially explosive atmospheres.

9.2.5 Vibration and Shock

The drive has been tested according to the procedure based on the following standards:

- EN/IEC 60068-2-6.
- EN/IEC 60068-2-34.
- EN/IEC 60068-2-35.
- EN/IEC 60068-2-36.

These tests subject the unit to 0.7 g forces over the range of 18–1000 Hz random in 3 directions for 2 hours. All Danfoss VLT® drives comply with requirements that correspond to these conditions when the unit is wall or floor mounted and when the unit is mounted within panels bolted to walls or to floors.

9.2.6 Maintenance

Danfoss drive models up to 90 kW are maintenancefree. High-power drives (rated at 110 kW or higher) have built-in filter mats, which require periodic cleaning depending on the exposure to dust and contaminants. Maintenance intervals for the cooling fans (approximately 3 years) and capacitors (approximately 5 years) are recommended in most environments.

9.3 Mounting Configurations

9.3.1 Side-by-side Mounting

All enclosure sizes allow side-by-side installation except when an IP21/NEMA4X/Type1 enclosure is used.

IP21 A and B enclosures can be arranged side by side with no clearance required between them. However, the mounting order is important.

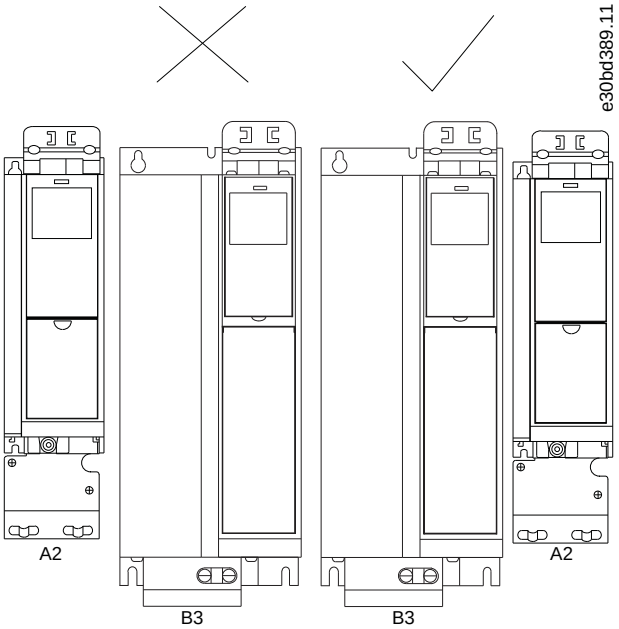

Illustration 55: Correct Side-by-side Mounting

If the IP21 enclosure kit is used on enclosure sizes A1, A2, or A3, there must be a clearance between each drive of minimum 50 mm (2 in). For optimal cooling conditions, allow a free air passage above and below the drive, see table 50.

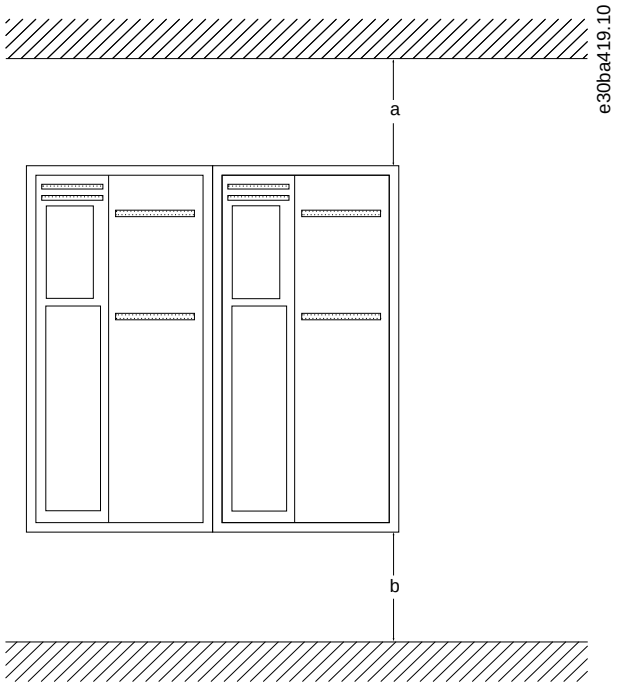

Illustration 56: Clearance

Table 50: Air Passage for Different Enclosure Sizes

Enclosure size	A1 [1], A2, A3, A4, A5, B1	B2, B3, B4, C1, C3	C2, C4
a [mm (in)]	100 (3.9)	200 (7.9)	225 (8.9)
b [mm (in)]	100 (3.9)	200 (7.9)	225 (8.9)

[1] *A1 is for FC 301 only.*

9.3.2 Wall Mounting

Context:

If the drive is to be mounted on a non-solid back wall, provide the drive with a mounting plate due to insufficient cooling air over the heat sink.

NOTICE

The mounting plate is only relevant for enclosure sizes A4, A5, B1, B2, C1, and C2.

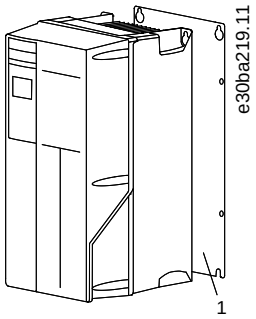

1 Mounting plate

Illustration 57: Mounting with Mounting Plate

Procedure

1. Drill holes according to the measurements given.
2. Provide screws suitable for the surface for mounting the drive.
3. Retighten all 4 screws.

For drives with IP66, take extra care to maintain the corrosive-resistant surface. A fiber washer or a nylon washer may be used to protect the epoxy coating.

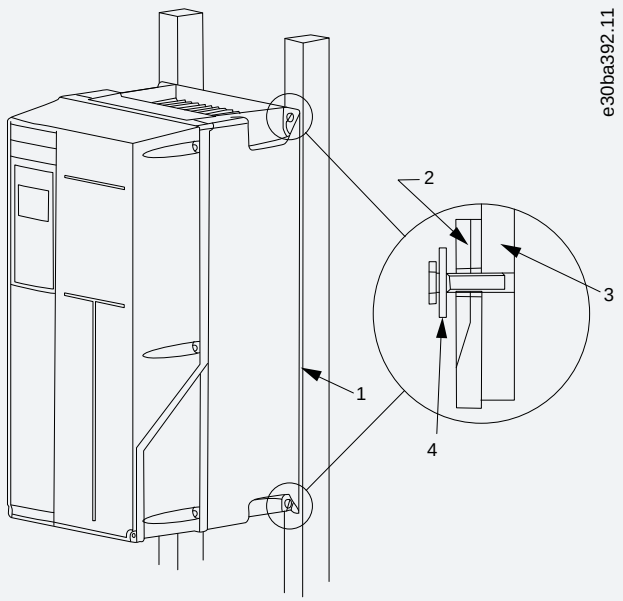

1	Mounting plate	**2**	IP66 drive
3	Base plate	**4**	Fiber washer

Illustration 58: Mounting an IP66 Drive with Washers

9.4 Derating

9.4.1 Derating for Running at Low Speed

When a motor is connected to a drive, it is necessary to ensure that the cooling of the motor is adequate.

The level of heating depends on the load on the motor, the operating speed, and time.

Constant torque applications (CT mode)

A problem may occur at low RPM values in constant torque applications. In a constant torque application, a motor may overheat at low speeds due to less cooling air from the motor integral fan.

Therefore, if the motor is to be run continuously at an RPM value lower than half of the rated value, the motor must be supplied with extra air cooling (or a motor designed for this type of operation may be used).

Alternatively, reduce the load level of the motor by selecting a larger motor. However, the design of the drive limits the motor size.

Variable (quadratic) torque applications (VT)

In VT applications such as centrifugal pumps and fans, where the torque is proportional to the square of the speed and the power is proportional to the cube of the speed, there is no need for extra cooling or derating of the motor.

9.4.2 Derating for Low Air Pressure

The cooling capability of air is decreased at lower air pressure.

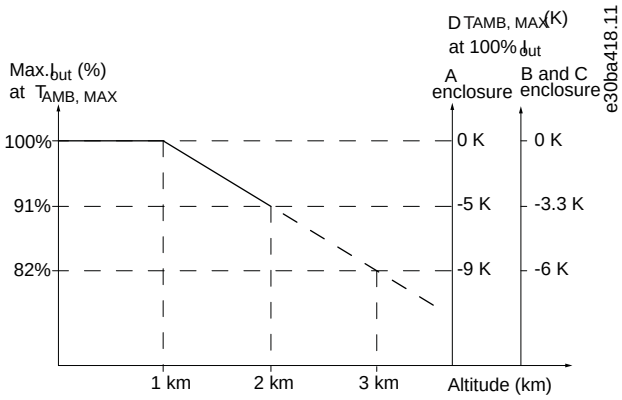

Illustration 59: Derating of Output Current Versus Altitude at $T_{AMB, MAX}$ for Enclosure Sizes A, B, and C

Below 1000 m (3280 ft) altitude, no derating is necessary. Above 1000 m (3280 ft), the ambient temperature (T_{AMB}) or maximum output current (I_{out}) should be derated in accordance with the diagram in illustration 60.

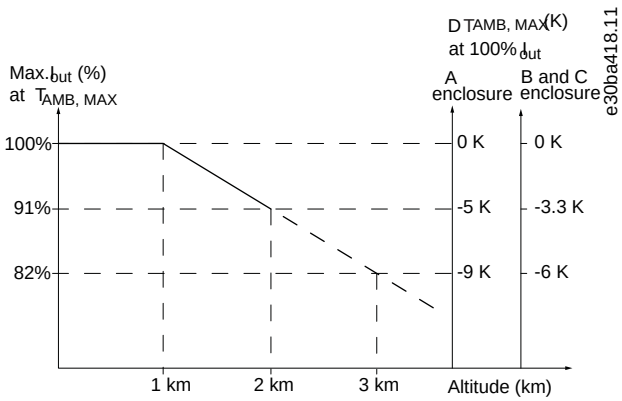

Illustration 60: Derating of Output Current versus Altitude at $T_{AMB,MAX}$ for Enclosure Sizes A, B, and C

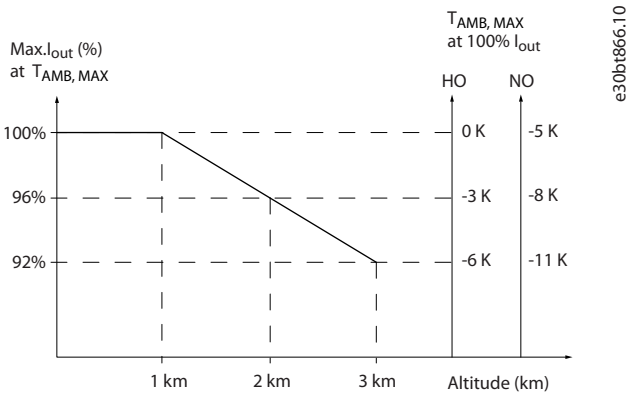

Illustration 61: Derating of Output Current Based on ALtitude at $T_{AMB,MAX}$

At altitudes above 2000 m (6561 ft), contact Danfoss regarding PELV.

Alternatively, lower the ambient temperature at high altitudes and thereby ensure 100% output current at high altitudes. As an example of how to read the graph, the situation at 2000 m (6561 ft) is elaborated for an enclosure size B with $T_{AMB,MAX}$ = 50 °C (122 °F). At a temperature of 45 °C (113 °F) ($T_{AMB,MAX}$ - 3.3 K), only 91% of the rated output current is available. By lowering the temperature by 3.3 °C (37.9 F), it is possible to ensure 100%. This means that 100% of the rated output current is available at 41.7 °C (107 °F) continuous and 46.7 °C (116 °F) intermittent.

9.4.3 Derating for Ambient Temperature and Switching Frequency

9.4.3.1 Derating for Ambient Temperature, Enclosure Size A

60° AVM - Pulse width modulation	SFAVM - Stator frequency asynchronous vector modulation
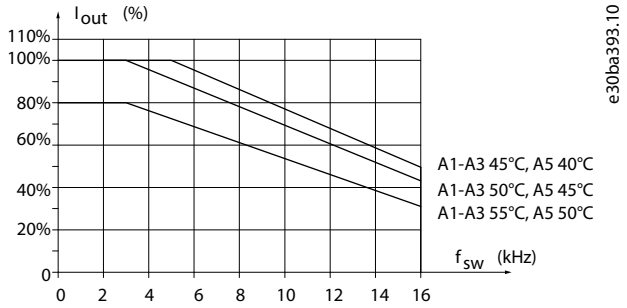	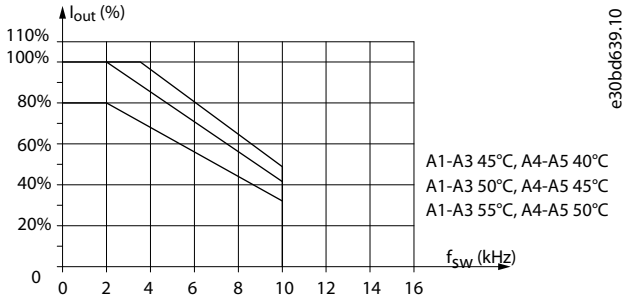
Illustration 62: Derating of I_{out} for Different $T_{AMB,MAX}$ for Enclosure Size A, using 60° AVM	**Illustration 63: Derating of I_{out} for Different $T_{AMB,MAX}$ for Enclosure Size A, using SFAVM**

When using only 10 m (32.8 ft) motor cable or less in enclosure size A, less derating is necessary. This is because the length of the motor cable has a relatively high impact on the recommended derating.

60° AVM - Pulse width modulation	SFAVM - Stator frequency asynchronous vector modulation
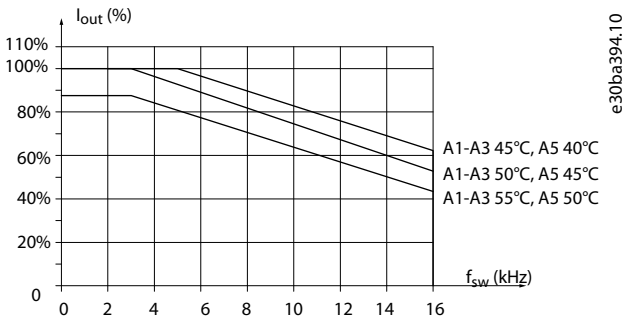 **Illustration 64: Derating of I_{out} for Different $T_{AMB,MAX}$ for Enclosure Size A, using 60° AVM and maximum 10 m (32.8 ft) motor cable**	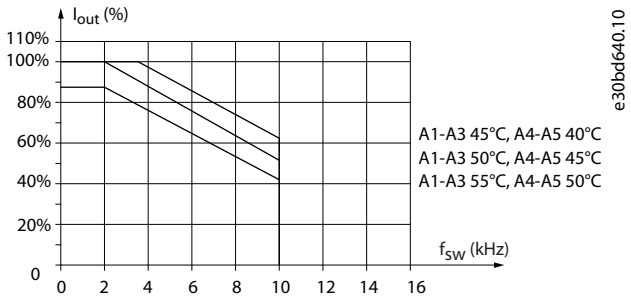 **Illustration 65: Derating of I_{out} for Different T for Enclosure Size A, using SFAVM and maximum 10 m (32.8 ft) motor cable**

9.4.3.2 Derating for Ambient Temperature, Enclosure Size B

Enclosure Size B - T2, T4, and T5

For enclosure sizes B and C, the derating also depends on the overload mode selected in *parameter 1-04 Overload Mode*.

60° AVM - Pulse width modulation, high overload (160%)

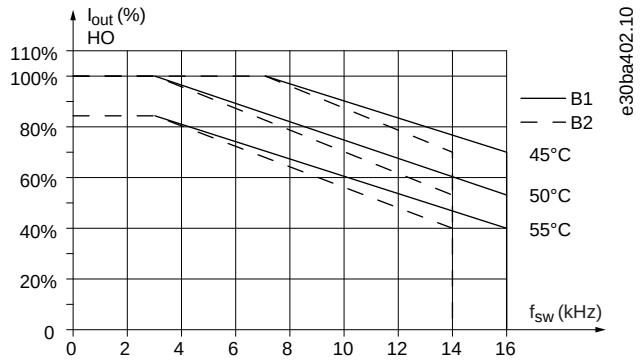

Illustration 66: Derating of I_{out} for Different $T_{AMB,MAX}$ for Enclosure Sizes B1 and B2, using 60° AVM

60° AVM - Pulse width modulation, normal overload (110%)

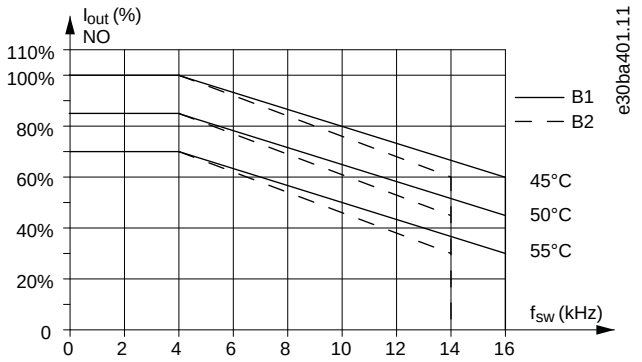

Illustration 67: Derating of I_{out} for Different $T_{AMB,MAX}$ for Enclosure Sizes B1 and B2, using 60° AVM

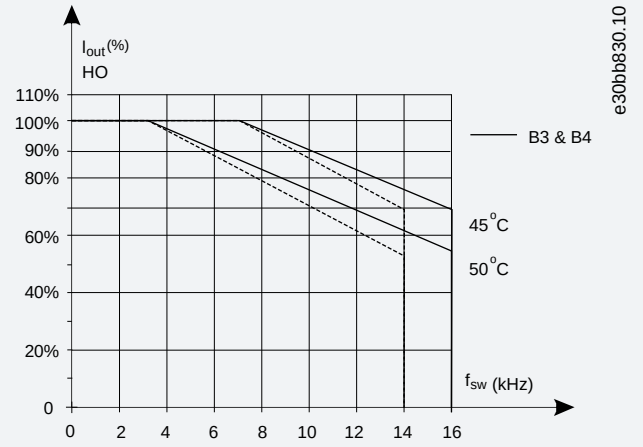

Illustration 68: Derating of I_{out} for Different $T_{AMB,MAX}$ for Enclosure Sizes B3 and B4, using 60° AVM

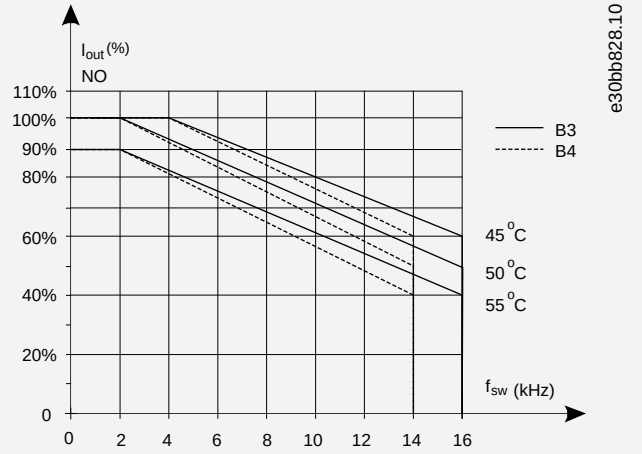

Illustration 69: Derating of I_{out} for Different $T_{AMB,MAX}$ for Enclosure Sizes B3 and B4, using 60° AVM

SFAVM - Stator frequency asynchronous vector modulation, high overload (160%)

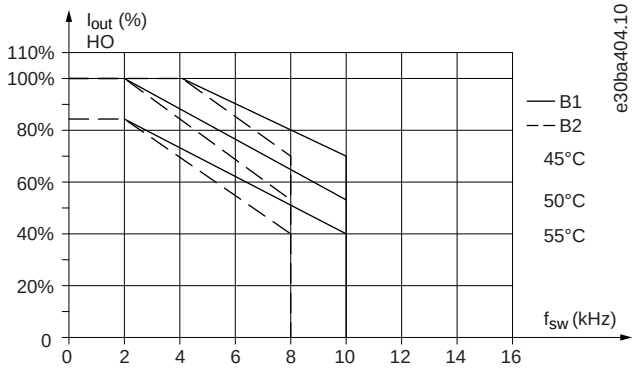

Illustration 70: Derating of I_{out} for Different $T_{AMB,MAX}$ for Enclosure Sizes B1 and B2, using SFAVM

SFAVM - Stator frequency asynchronous vector modulation, normal overload (110%)

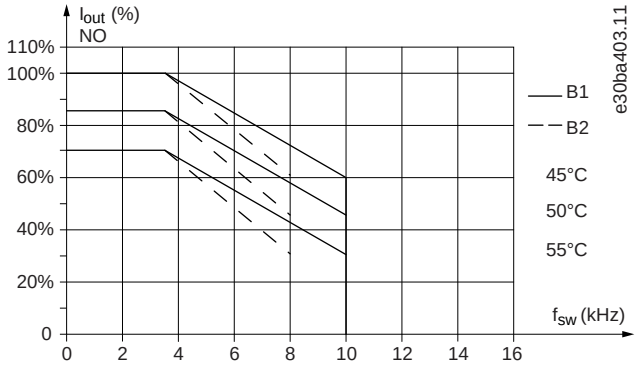

Illustration 71: Derating of I_{out} for Different $T_{AMB,MAX}$ for Enclosure Sizes B1 and B2, using SFAVM

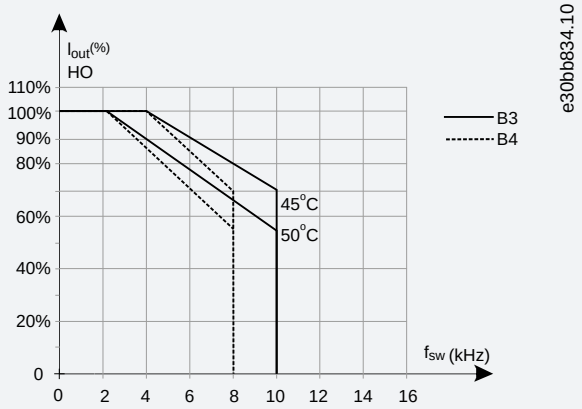

Illustration 72: Derating of I_{out} for Different $T_{AMB,MAX}$ for Enclosure Sizes B3 and B4, using SFAVM

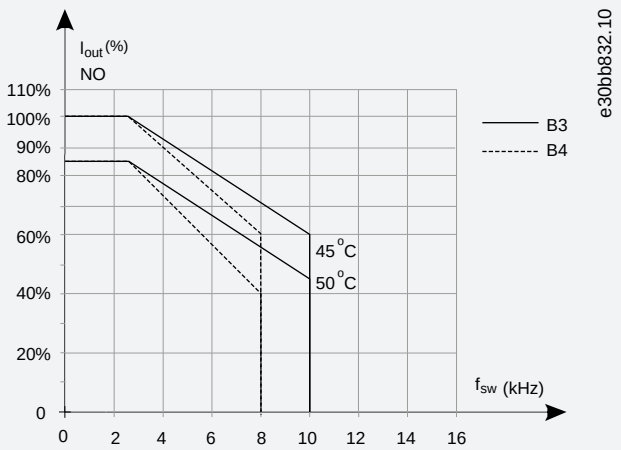

Illustration 73: Derating of I_{out} for Different $T_{AMB,MAX}$ for Enclosure Sizes B3 and B4, using SFAVM

Enclosure Size B - T6

60° AVM - Pulse width modulation, high overload (160%)

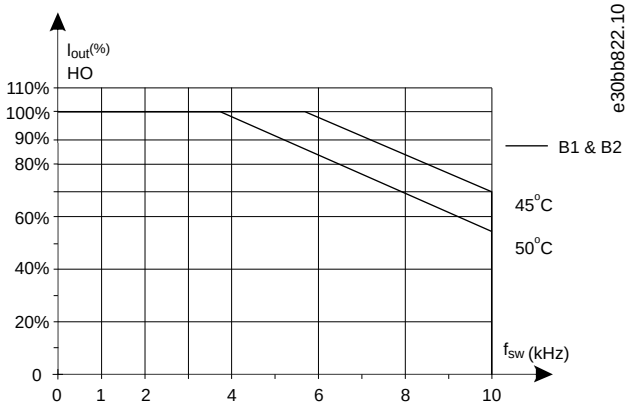

Illustration 74: Output Current Derating with Switching Frequency and Ambient Temperature for 600 V drives, for Enclosure Size B, using 60° AVM

60° AVM - Pulse width modulation, normal overload (110%)

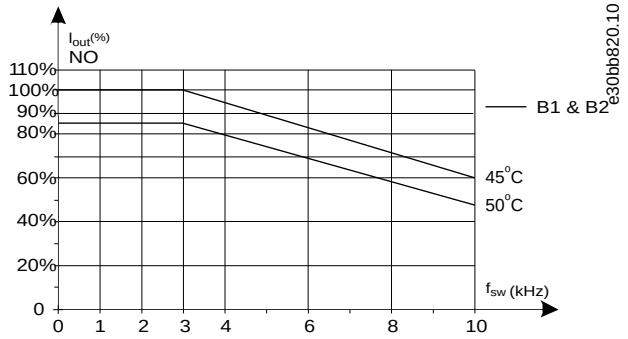

Illustration 75: Output Current Derating with Switching Frequency and Ambient Temperature for 600 V drives, for Enclosure Size B, using 60° AVM

SFAVM - Stator frequency asynchronous vector modulation, high overload (160%)

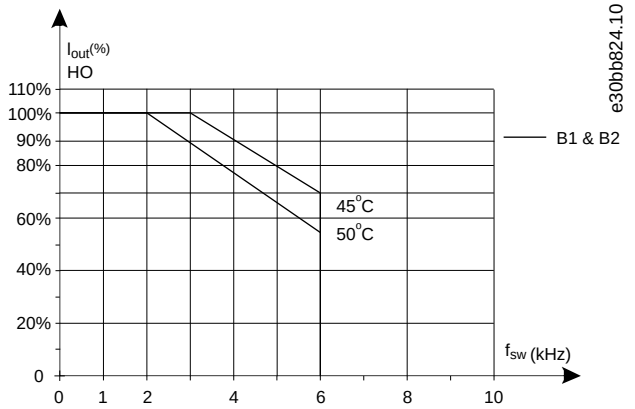

Illustration 76: Output Current Derating with Switching Frequency and Ambient Temperature for 600 V Drives, Enclosure Size B; SFAVM

SFAVM - Stator frequency asynchronous vector modulation, normal overload (110%)

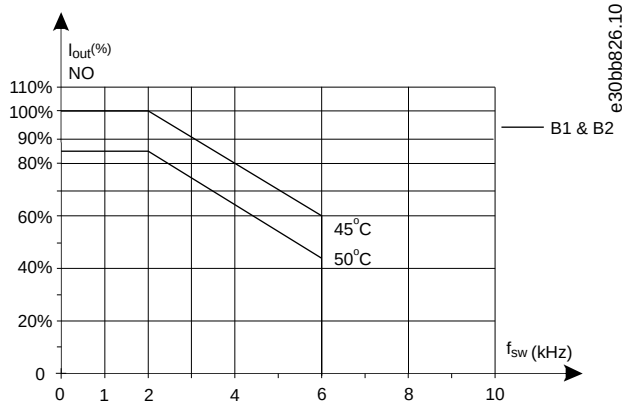

Illustration 77: Output Current Derating with Switching Frequency and Ambient Temperature for 600 V Drives, Enclosure Size B; SFAVM

Enclosure Sizes B2 and B4, 525–690 V - T7

NOTICE

The curves are drawn with the current as absolute value and are valid for both high and normal overload.

60° AVM - Pulse width modulation

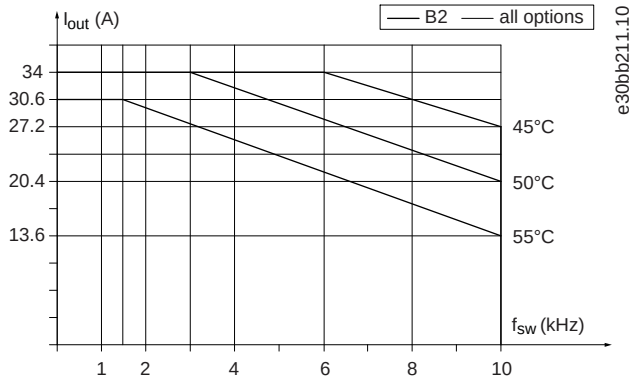

Illustration 78: Output Current Derating with Switching Frequency and Ambient Temperature for Enclosure Sizes B2 and B4, using 60° AVM

SFAVM - Stator frequency asynchronous vector modulation

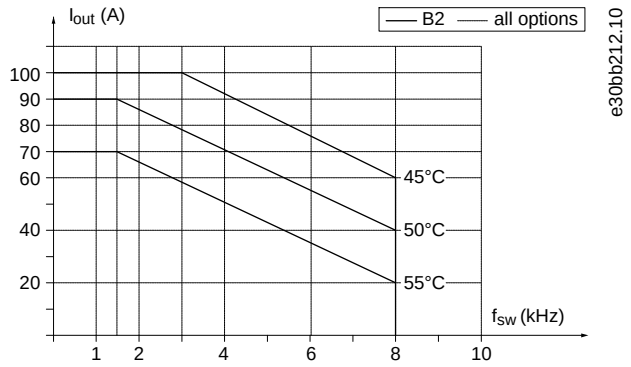

Illustration 79: Output Current Derating with Switching Frequency and Ambient Temperature for Enclosure Sizes B2 and B4, using SFAVM

9.4.3.3 Derating for Ambient Temperature, Enclosure Size C

Enclosure Size C - T2, T4, and T5

60° AVM - Pulse width modulation, high overload (160%)	60° AVM - Pulse width modulation, normal overload (110%)
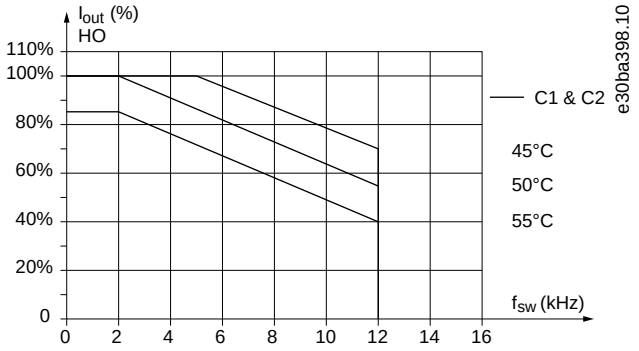 **Illustration 80: Derating of I_{out} for Different $T_{AMB,MAX}$ for Enclosure Sizes C1 and C2, using 60° AVM**	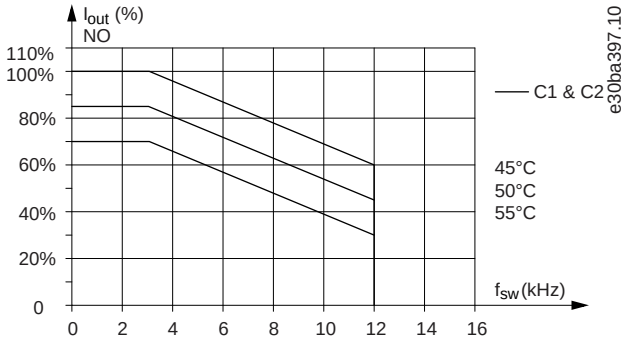 **Illustration 81: Derating of I_{out} for Different $T_{AMB,MAX}$ for Enclosure Sizes C1 and C2, using 60° AVM**
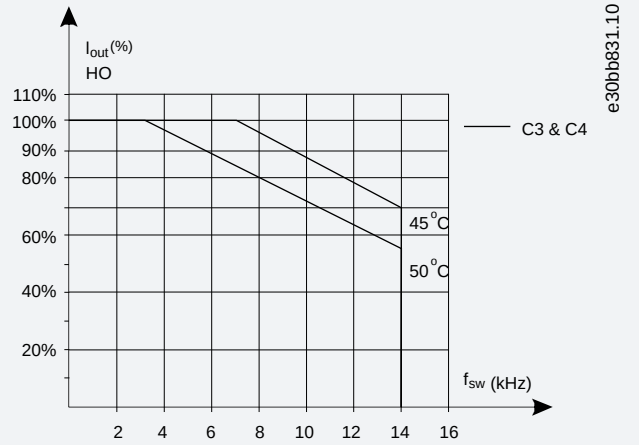 **Illustration 82: Derating of I_{out} for Different $T_{AMB,MAX}$ for Enclosure Sizes C3 and C4, using 60° AVM**	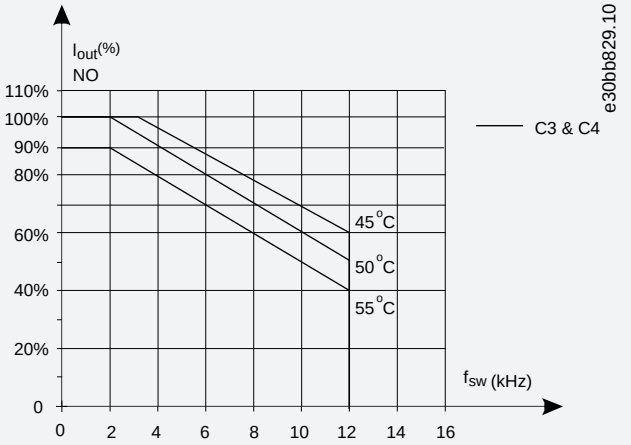 **Illustration 83: Derating of I_{out} for Different $T_{AMB,MAX}$ for Enclosure Sizes C3 and C4, using 60° AVM**

SFAVM - Stator frequency asynchronous vector modulation, high overload (160%)

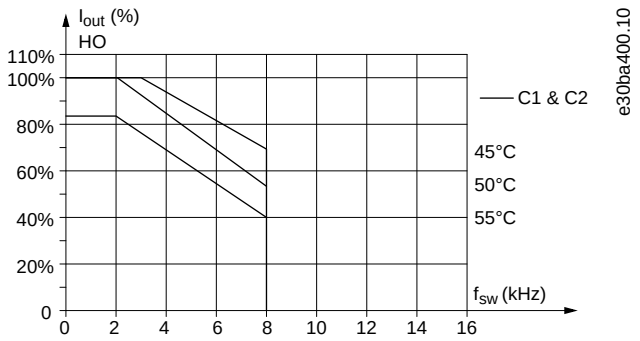

Illustration 84: Derating of I_{out} for Different $T_{AMB,MAX}$ for Enclosure Sizes C1 and C2, using SFAVM

SFAVM - Stator frequency asynchronous vector modulation, normal overload (110%)

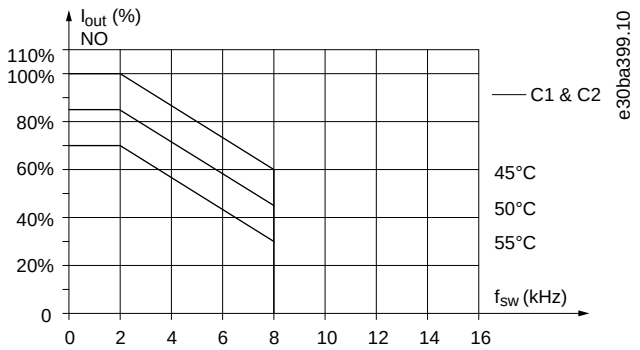

Illustration 85: Derating of I_{out} for Different $T_{AMB,MAX}$ for Enclosure Sizes C1 and C2, using SFAVM

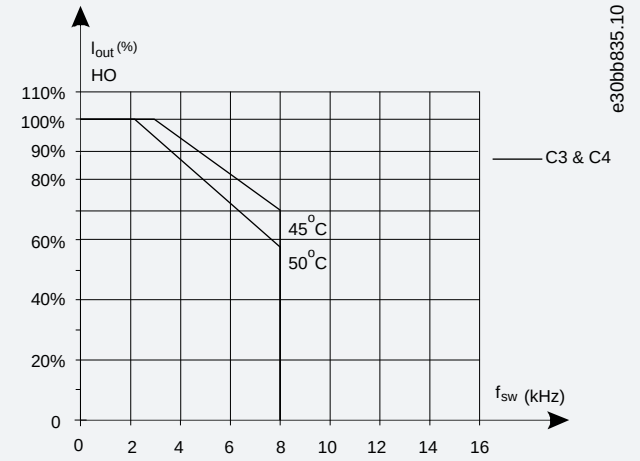

Illustration 86: Derating of I_{out} for Different $T_{AMB,MAX}$ for Enclosure Sizes C3 and C4, using SFAVM

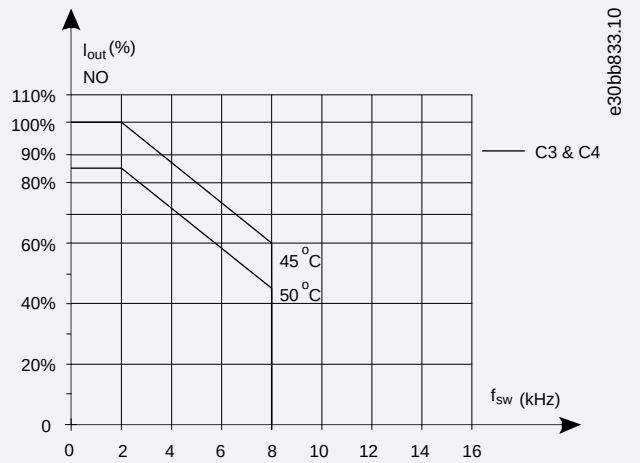

Illustration 87: Derating of I_{out} for Different $T_{AMB,MAX}$ for Enclosure Sizes C3 and C4, using SFAVM

Enclosure Size C - T6

60° AVM - Pulse width modulation, high overload (160%)

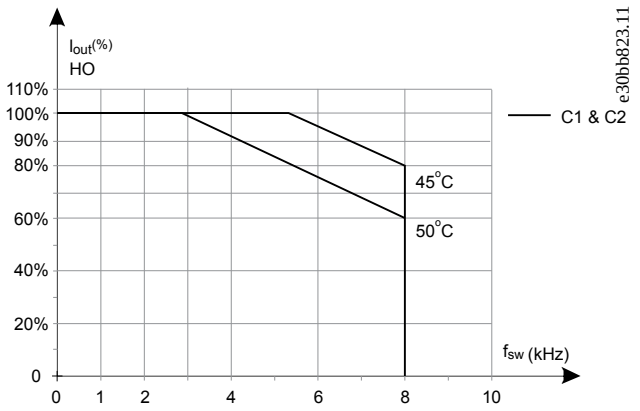

Illustration 88: Output Current Derating with Switching Frequency and Ambient Temperature for 600 V Drives, for Enclosure Size C, using 60° AVM

60° AVM - Pulse width modulation, normal overload (110%)

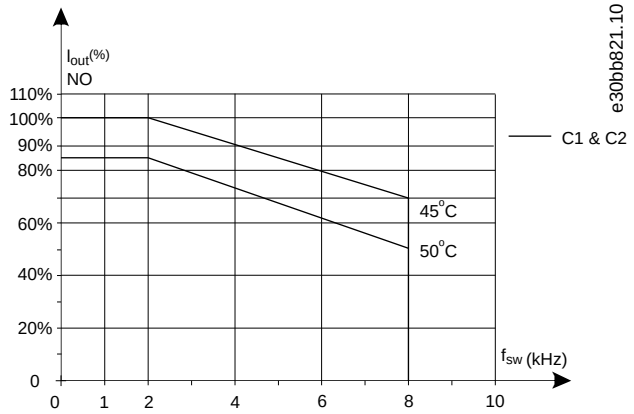

Illustration 89: Output Current Derating with Switching Frequency and Ambient Temperature for 600 V Drives, for Enclosure Size C, using 60° AVM

SFAVM - Stator frequency asynchronous vector modulation, high overload (160%)

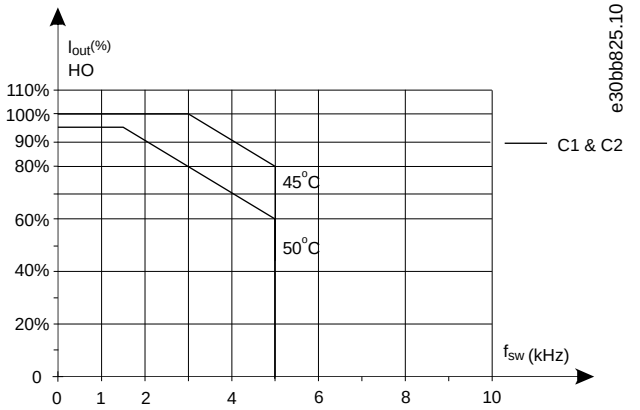

Illustration 90: Output Current Derating with Switching Frequency and Ambient Temperature for 600 V Drives, Enclosure Size C; SFAVM

SFAVM - Stator frequency asynchronous vector modulation, normal overload (110%)

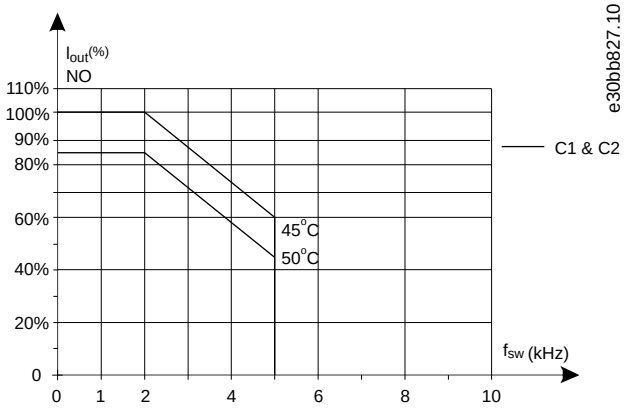

Illustration 91: Output Current Derating with Switching Frequency and Ambient Temperature for 600 V Drives, Enclosure Size C; SFAVM

Enclosure Size C2 and C3 - T7

NOTICE

The curves are drawn with the current as absolute value and are valid for both high and normal overload.

60° AVM - Pulse width modulation	SFAVM - Stator frequency asynchronous vector modulation
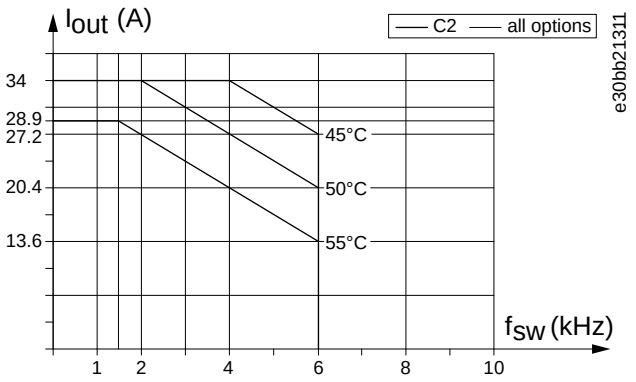	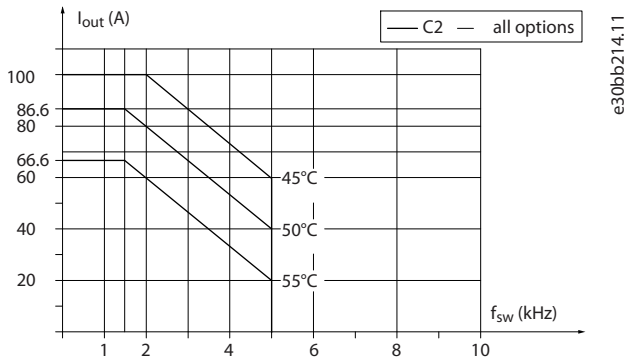
Illustration 92: Output Current Derating with Switching Frequency and Ambient Temperature for Enclosure Size C2, using 60° AVM	**Illustration 93: Output Current Derating with Switching Frequency and Ambient Temperature for Enclosure Size C2, using SFAVM**

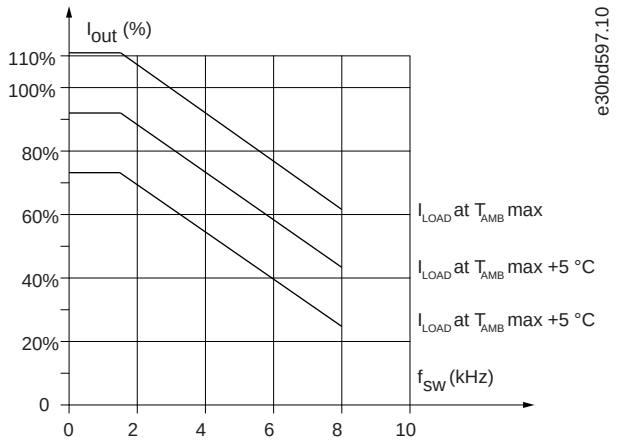

Illustration 94: Output Current Derating with Switching Frequency and Ambient Temperature for Enclosure Size C3

10 Electrical Installation Considerations

10.1 Safety Instructions

⚠ WARNING ⚠

INDUCED VOLTAGE

Induced voltage from output motor cables that run together can charge equipment capacitors, even with the equipment turned off and locked out. Failure to run output motor cables separately or to use shielded cables could result in death or serious injury.

- Run output motor cables separately or use shielded cables.
- Simultaneously lock out all the drives.

⚠ WARNING ⚠

SHOCK HAZARD

The unit can cause a DC current in the PE conductor. Failure to use a Type B residual current-operated protective device (RCD) may lead to the RCD not providing the intended protection and therefore may result in death or serious injury.

- When an RCD is used for protection against electrical shock, only a Type B device is allowed on the supply side.

⚠ WARNING ⚠

LEAKAGE CURRENT HAZARD

Leakage currents exceed 3.5 mA. Failure to ground the drive properly can result in death or serious injury.

- Ensure the correct grounding of the equipment by a certified electrical installer.

For electrical safety

According to the standard EN 61800-5-1, 1 or more of these conditions for the protective circuit must be true. The connection must be fixed.

- The protective earthing conductor must have a cross-sectional area of minimum 10 mm^2 (8 AWG) Cu or 16 mm^2 (6 AWG), OR
- There must be an automatic disconnection of the mains if the protective earthing conductor breaks, OR
- There must be a terminal for a 2nd protective earthing conductor in the same cross-sectional are as the 1st protective earthing conductor.

Cross-sectional area of the phase conductors (S) [mm^s (AWG)]	The minimum cross-sectional area of the protective earthing conductor in question [mm^2 (AWG)]
S≤16 (6)	S
16 (6)<S≤35 (2)	16 (6)
35 (2)<S	S/2

The values of the table are only valid if the protective earthing conductor is made of the same metal as the phase conductors. If this is not the case, the cross-sectional area of the protective earthing conductor must be determined in a manner that produces a conductance equivalent to that which results from the calculations in the table.

The cross-sectional area of each protective earthing conductor that is not a part of the mains cable or the cable enclosure must be a minimum of:

- 25 mm^2 (14 AWG) if there is mechanical protection, AND
- 4 mm^2 (12 AWG) if there is no mechanical protection. With cord-connected equipment, ensure that the protective earthing conductor in the cord is the last conductor to be interrupted if the strain relilef mechanism breaks.

Adhere to the local regulations on the minimum size of the protective earthing conductor.

Further instructions for electrical safety:

- Ground the drive in accordance with applicable standards and directives.
- Use a dedicated ground wire for input power, motor power, and control wiring.
- Do not ground 1 drive to another in a daisy-chain fashion.
- Keep the ground wire connections as short as possible.
- Follow the wiring requirements from the motor manufacturer.

For EMC-compliant installation

- Establish electrical contact between cable shield and drive enclosure by using metal grommets or by using the clamps provided on the equipment.
- Use high-strand wire to reduce burst transient.
- Do not use pigtails.

NOTICE

POTENTIAL EQUALIZATION

Risk of burst transient when the ground potential between the drive and the control system is different. Install equalizing cables between the system components. Recommended cable cross-section: 16 mm^2 (6 AWG).

Overcurrent protection:

- Extra protection equipment such as short-circuit protection or motor thermal protection between drive and motor are required for applications with multiple motors.
- Input fusing is required to provide short circuit and overcurrent protection. If fuses are not factory-supplied, the installer must provide them. See maximum fuse ratings in 10.6.2 CE Compliance and 10.6.3 UL Compliance.

Wire type and ratings:

- All wiring must comply with local and national regulations regarding cross-section and ambient temperature requirements.
- Power connection wire recommendation: Minimum 75 °C (167 °F) rated copper wire.

10.2 Wiring Schematic

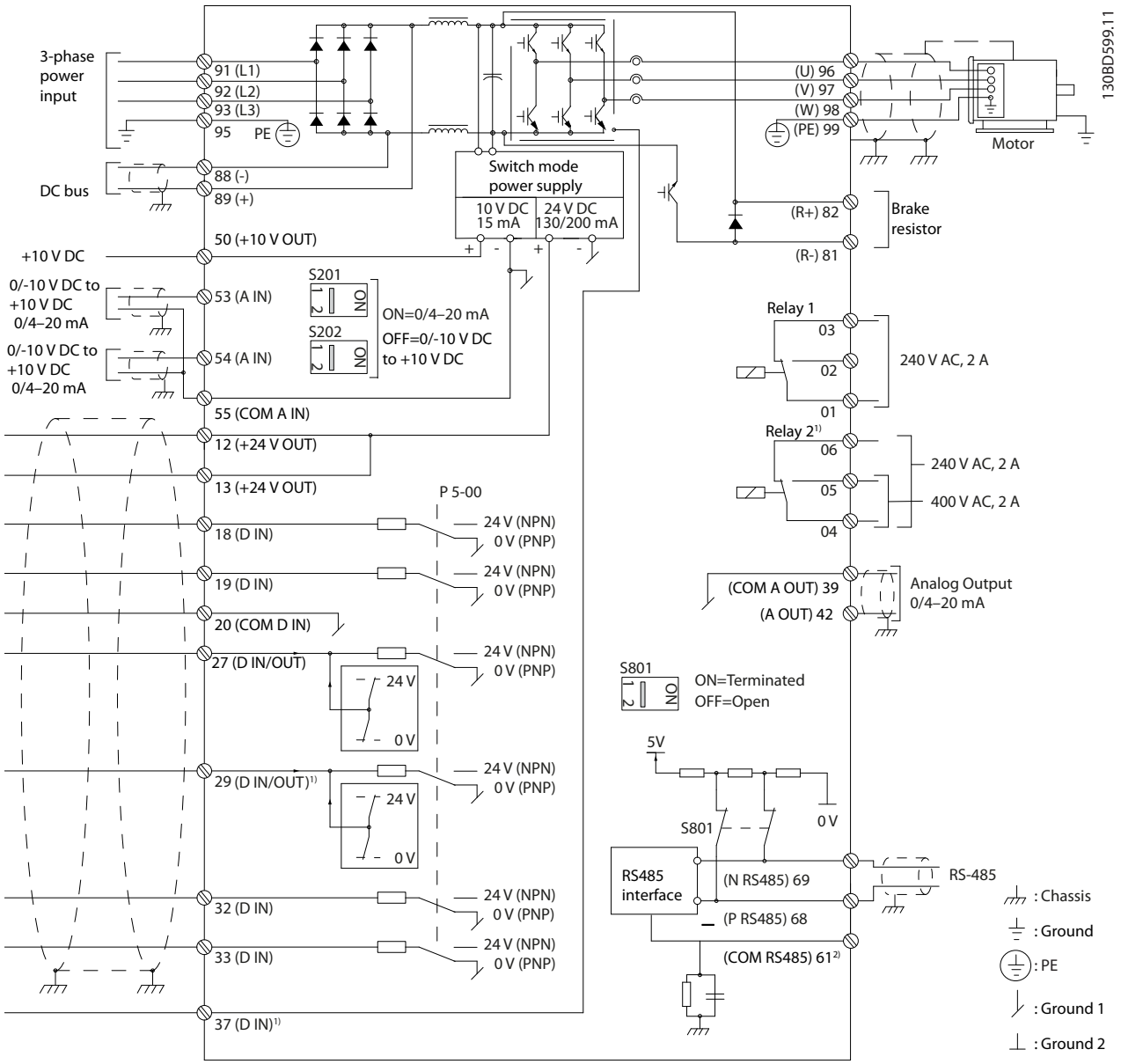

A Analog	**D** Digital
1 Terminal 37 (optional) is used for Safe Torque Off (STO). For installation instructions, refer to the VLT® Safe Torque Off Operating Guide. For FC 301, terminal 37 is only included in enclosure size A1. Relay 2 and terminal 29 have no function in FC 301.	**2** Do not connect cable shield.

Illustration 95: Basic Wiring Schematic

For information on EMC-compliant information, please refer to 10.17 EMC-compliant Installation.

10.3 Connections

10.3.1 Power Connections

NOTICE

All cabling must comply with national and local regulations on cable cross-sections and ambient temperature. UL applications require 75 °C (167 °F) copper conductors. Non-UL applications can use 75 °C (167 °F) and 90 °C (194 °F) copper conductors.

NOTICE

The plug connector for power is pluggable on drives up to 7.5 kW (10 hp).

The power cable connections are located as shown in illustration 96. See 8.6.1 Cable Lengths and Cross-sections for Control Cables for correct dimensioning or motor cable cross-section and length.

For protection of the drive, use the recommended fuses unless the unit has built-in fuses. Recommended fuses are listed in 10.6.2 CE Compliance and 10.6.3 UL Compliance. Ensure that proper fusing complies with local regulations. The connection of mains is fitted to the mains switch, if included.

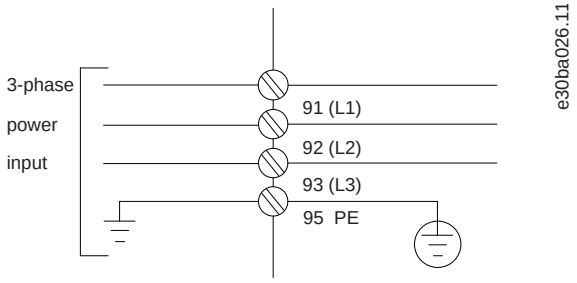

Illustration 96: Connection of Mains

Aluminum conductors

Terminals can accept aluminum conductors, but the conductor surface must be clean, and the oxidation must be removed and sealed by neutral, acid-free Vaseline grease before the conductor is connected. Furthermore, the terminal screw must be retightened after 2 days due to softness of the aluminum. It is crucial to keep the connection a gas tight joint, otherwise the aluminum surface oxidizes again.

NOTICE

The motor cable must be shielded/armored. If an unshielded/unarmored cable is used, some EMC requirements are not complied with. Use a shielded/armored motor cable to comply with EMC emission specifications.

For more information on EMC, see 10.17 EMC-compliant Installation.

Shielding of cables

Avoid installation with twisted shield ends (pigtails). They spoil the shielding effect at higher frequencies. If it is necessary to break the shield to install a motor isolator or contactor, continue the shield at the lowest possible HF impedance. Connect the motor cable shield

to both the decoupling plate of the drive and the metal housing of the motor. Make the shield connections with the largest possible surface area (cable clamp) by using the installation devices within the drive.

Cable length and cross-section

The drive has been EMC-tested with a given length of cable. Keep the motor cable as short as possible to reduce noise level and leakage currents.

Switching frequency

When drives are used together with sine-wave filters to reduce the acoustic noise from a motor, the switching frequency must be set according to the instructions in *parameter 14-01 Switching Frequency*.

NOTICE

In motors without phase insulation, paper, or other insulation reinforcement suitable for operation with voltage supply, use a sine-wave filter on the output of the drive.

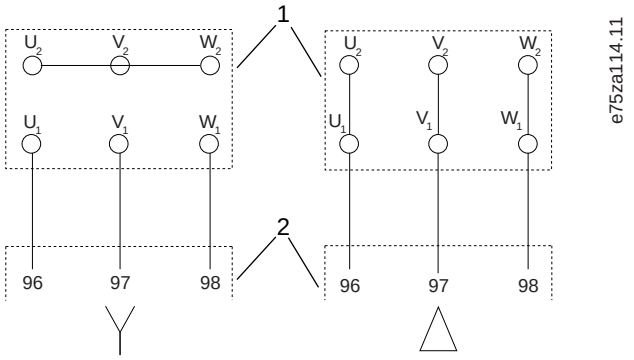

1 Motor	**2** Drive

Illustration 97: Motor Cable Connection

10.3.2 IT Grid Connection

Mains supply isolated from ground

If the drive is supplied from an isolated mains source (IT mains, floating delta, or grounded delta) or TT/TN-S mains with grounded leg, the RFI switch is recommended to be turned off via *parameter 14-50 RFI Filter* on the drive and *parameter 14-50 RFI Filter* on the filter. For more detail, see IEC 364-3. In the off position, the filter capacitors between the chassis and the DC link are cut off to avoid damage to the DC link and to reduce the ground capacity currents, according to IEC 61800-3. If optimum EMC performance is needed, or parallel motors are connected, or the motor cable length is above 25 m (82 ft), Danfoss recommends setting *parameter 14-50 RFI Filter* to *[1] On*. Refer also to the Application Note, VLT on IT grid. It is important to use isolation monitors that are rated for use together with power electronics (IEC 61557-8).

Danfoss does not recommend using an output contactor for 525–690 V drives connected to an IT mains network.

10.3.3 DC Bus Connection

NOTICE

EMC Requirements

According to the EMC Directive, a system is defined as a combination of several types of equipment, finished products, and/or components combined, designed and/or put together by the same person (system manufacturer) intended to be placed on the market for distribution as a single functional unit for an end user and intended to be installed and operated together to perform a specific task.

The EMC directive applies to products/systems and installations, but in case the installation is built up of CE-marked products/systems, the installation can also be considered compliant with the EMC directive. Installations shall not be CE marked.

According to the EMC Directive, Danfoss Drives as a manufacturer of product/systems is responsible for obtaining the essential requirements of the EMC directive and attaching the CE mark. For systems involving load sharing and other DC terminals, Danfoss Drives can only ensure compliance to EMC Directive when the end user connects combinations of Danfoss Drives products as described in our technical documentation.

If any third-party products are connected to the load share or other DC terminals on the AC drives, Danfoss Drives cannot guarantee that the EMC requirements are fulfilled.

The DC bus terminal is used for DC back-up, with the DC link being supplied from an external source.

Terminals	Function
88, 89	DC bus

10.3.4 Load Sharing Connection

NOTICE

EMC Requirements

According to the EMC Directive, a system is defined as a combination of several types of equipment, finished products, and/or components combined, designed and/or put together by the same person (system manufacturer) intended to be placed on the market for distribution as a single functional unit for an end user and intended to be installed and operated together to perform a specific task.

The EMC directive applies to products/systems and installations, but in case the installation is built up of CE-marked products/systems, the installation can also be considered compliant with the EMC directive. Installations shall not be CE marked.

According to the EMC Directive, Danfoss Drives as a manufacturer of product/systems is responsible for obtaining the essential requirements of the EMC directive and attaching the CE mark. For systems involving load sharing and other DC terminals, Danfoss Drives can only ensure compliance to EMC Directive when the end user connects combinations of Danfoss Drives products as described in our technical documentation.

If any third-party products are connected to the load share or other DC terminals on the AC drives, Danfoss Drives cannot guarantee that the EMC requirements are fulfilled.

Load sharing links together the DC links of several drives. For an overview, see 6.5 Load Sharing Overview.

The load sharing feature requires extra equipment and safety considerations. Consult Danfoss for ordering and installation recommendations.

Terminals	Function
88, 89	Load sharing

10.3.5 Brake Cable Connection

The connection cable to the brake resistor must be shielded and the maximum length from the drive to the DC bar is limited to 25 m (82 ft).

- Use cable clamps to connect the shield to the conductive backplate on the drive and to the metal cabinet of the brake resistor.
- Size the brake cable cross-section to match the brake torque.

Terminals	Function
81, 82	Brake resistor terminals

See the VLT® Brake Resistor MCE 101 Design Guide for more details.

NOTICE

If a short circuit in the brake module occurs, prevent excessive power dissipation in the brake resistor by using a mains switch or contactor to disconnect the mains from the drive.

10.3.6 Grounding

To obtain electromagnetic compatibility (EMC), consider the following basic issues when installing a drive.

- Safety grounding: Note that the drive has a high leakage current and must be grounded appropriately for safety reasons. Apply local safety regulations.
- High-frequency grounding: Keep the ground wire connections as short as possible.

Connect the different ground systems at the lowest possible conductor impedance. The lowest possible conductor impedance is obtained by keeping the conductor as short as possible and by using the greatest possible surface area. The metal cabinets of the different devices are mounted on the cabinet rear plate using the lowest possible HF impedance. This avoids having different HF voltages for the individual devices and avoids the risk of radio interference currents running in connection cables that may be used between the devices. The radio interference has been reduced. To obtain a low HF impedance, use the fastening bolts of the devices as HF connection to the rear plate. It is necessary to remove insulating paint or similar from the fastening points.

10.3.7 Safety Ground Connection

⚠ WARNING ⚠

LEAKAGE CURRENT HAZARD

Leakage currents exceed 3.5 mA. Failure to ground the drive properly can result in death or serious injury.

- Ensure the correct grounding of the equipment by a certified electrical installer.

The drive has a high leakage current and must be grounded appropriately for safety reasons according to IEC 61800-5-1.

10.4 Cables

10.4.1 EMC-correct Cables

To optimize EMC immunity of the control cables and emission from the motor cables, use braided shielded/armored cables.

The ability of a cable to reduce the in- and outgoing radiation of electric noise depends on the transfer impedance (Z_T). The shield of a cable is normally designed to reduce the transfer of electric noise. However, a shield with a lower transfer impedance (Z_T) value is more effective than a shield with a higher transfer impedance (Z_T).

Cable manufacturers rarely state the transfer impedance (Z_T), but it is often possible to estimate transfer impedance (Z_T) by assessing the physical design of the cable.

Transfer impedance (Z_T) can be assessed based on the following factors:

- The conductibility of the shield material.
- The contact resistance between the individual shield conductors.
- The shield coverage, that is, the physical area of the cable covered by the shield - often stated as a percentage value.
- Shield type (braided or twisted).

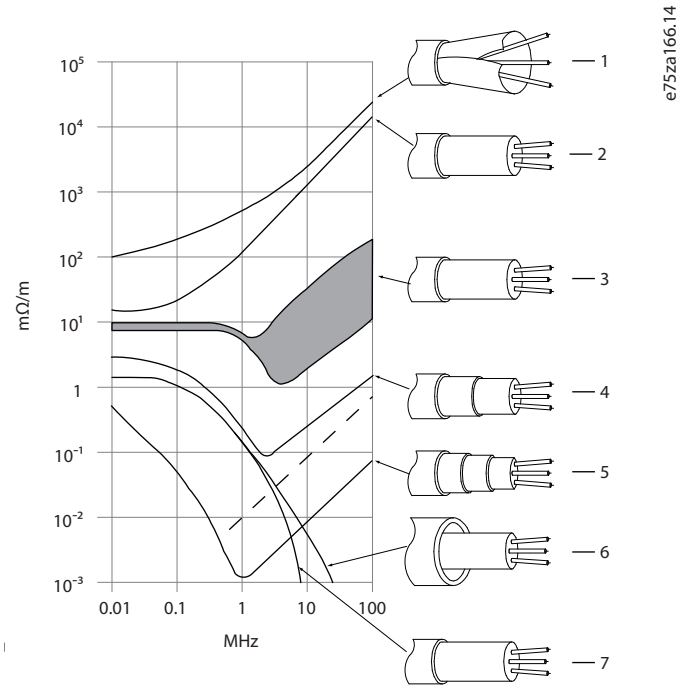

1	Aluminum-clad with copper wire.	**2**	Twisted copper wire or armored steel wire cable.
3	Single-layer braided copper wire with varying percentage shield coverage. This is the typical reference cable.	**4**	Double-layer braided copper wire.
5	Twin layer of braided copper wire with a magnetic, shielded/armored intermediate layer.	**6**	Cable that runs in copper tube or steel tube.
7	Lead cable with 1.1 mm (0.04 in) wall thickness.		

Illustration 98: Transfer Impedance (Z_T)

10.4.2 Preparing Cable Entry Holes

Procedure

1. Remove cable entry from the drive. Avoid that foreign parts fall into the drive when removing the knockouts.
2. Support the cable entry where the knockout is to be removed.
3. Remove the knockout with a strong mandrel and a hammer.
4. Remove burrs from the hole.
5. Mount the cable entry on the drive.

10.4.3 Specifications of Entry Holes

The suggested uses of the holes are recommendations, but other solutions are possible. Unused cable entry holes can be sealed with rubber grommets (for IP21).

10.4.3.1 Entry Holes, Enclosure Size A2, IP21

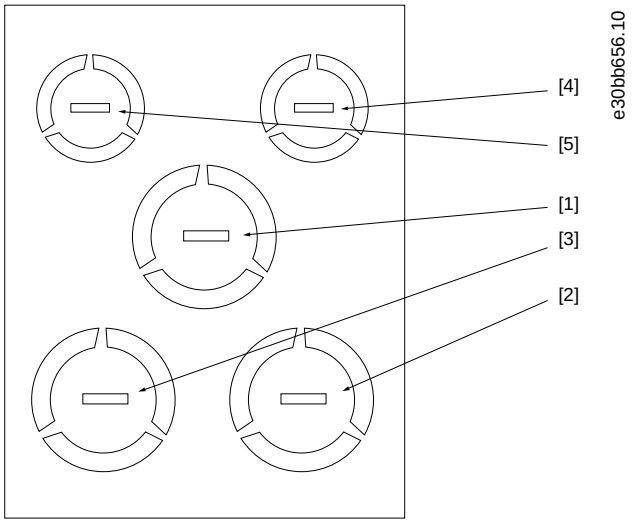

Table 51: Dimensions of Entry Holes for Enclosure Size A2, IP21

Hole number and recommended use	Dimensions [1]		Nearest metric
	UL [in]	[mm]	
1) Mains	3/4	28.4	M25
2) Motor	3/4	28.4	M25
3) Brake/loadsharing	3/4	28.4	M25
4) Control cable	1/2	22.5	M20
5) Control cable	1/2	22.5	M20

[1] *Tolerance ±0.2 mm.*

10.4.3.2 Entry Holes, Enclosure Size A3, IP21

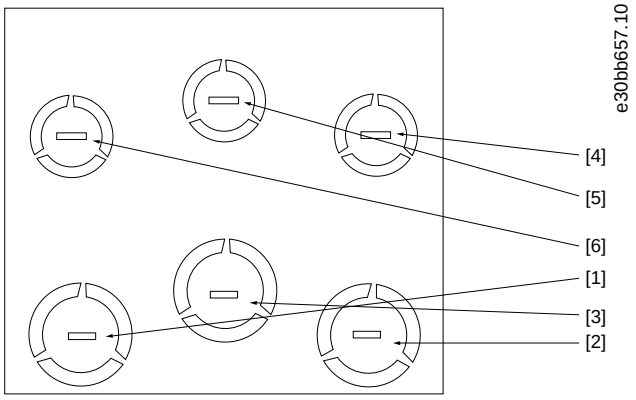

Table 52: Dimensions of Entry Holes for Enclosure Size A3, IP21

Hole number and recommended use	Dimensions [1]		Nearest metric
	UL [in]	[mm]	
1) Mains	3/4	28.4	M25
2) Motor	3/4	28.4	M25
3) Brake/loadsharing	3/4	28.4	M25
4) Control cable	1/2	22.5	M20
5) Control cable	1/2	22.5	M20
6) Control cable	1/2	22.5	M20

[1] *Tolerance ±0.2 mm.*

10.4.3.3 Entry Holes, Enclosure Size A4, IP55

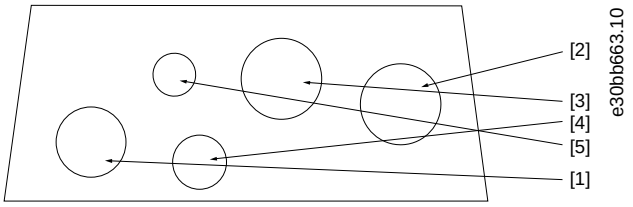

Table 53: Dimensions of Entry Holes for Enclosure Size A4, IP55

Hole number and recommended use	Dimensions [1]		Nearest metric
	UL [in]	[mm]	
1) Mains	3/4	28.4	M25
2) Motor	3/4	28.4	M25
3) Brake/loadsharing	3/4	28.4	M25

Hole number and recommended use	Dimensions [1]		Nearest metric
4) Control cable	1/2	22.5	M20
5) Removed	–	–	–

[1] *Tolerance ±0.2 mm.*

10.4.3.4 Entry Holes, Enclosure Size A4, IP55 Threaded Gland Holes

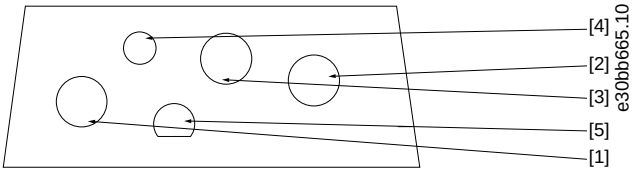

Table 54: Dimensions of Entry Holes for Enclosure Size A4, IP55 Threaded Gland Holes

Hole number and recommended use	Nearest metric
1) Mains	M25
2) Motor	M25
3) Brake/loadsharing	M25
4) Control cable	M16
5) Control cable	M20

10.4.3.5 Entry Holes, Enclosure Size A5, IP55

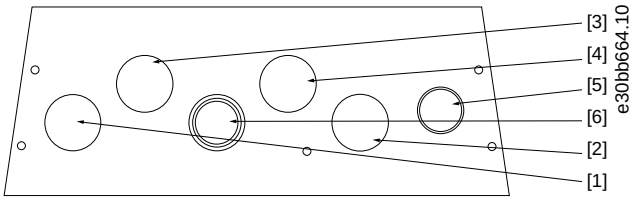

Table 55: Dimensions of Entry Holes for Enclosure Size A5, IP55

Hole number and recommended use	Dimensions [1]		Nearest metric
	UL [in]	**[mm]**	
1) Mains	3/4	28.4	M25
2) Motor	3/4	28.4	M25
3) Brake/loadsharing	3/4	28.4	M25
4) Control cable	3/4	28.4	M25
5) Control cable [2]	3/4	28.4	M25

Hole number and recommended use	Dimensions [1]		Nearest metric
6) Control cable [2]	3/4	28.4	M25

[1] *Tolerance ±0.2 mm.*

[2] *Knockout hole.*

10.4.3.6 Entry Holes, Enclosure Size A5, IP55 Threaded Gland Holes

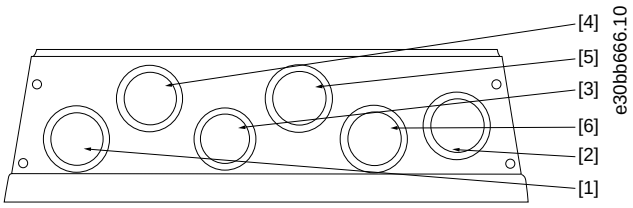

Table 56: Dimensions of Entry Holes for Enclosure Size A5, IP55 Threaded Gland Holes

Hole number and recommended use	Nearest metric
1) Mains	M25
2) Motor	M25
3) Brake/loadsharing	28.4 mm [1]
4) Control cable	M25
5) Control cable	M25
6) Control cable	M25

[1] *Knockout hole*

10.4.3.7 Entry Holes, Enclosure Size B1, IP21

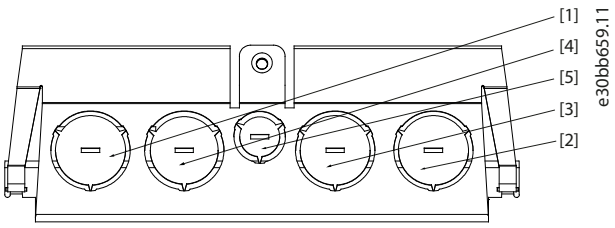

Table 57: Dimensions of Entry Holes for Enclosure Size B1, IP21

Hole number and recommended use	Dimensions [1]		Nearest metric
	UL [in]	**[mm]**	
1) Mains	1	34.7	M32

Hole number and recommended use	Dimensions [1]		Nearest metric
2) Motor	1	34.7	M32
3) Brake/loadsharing	1	34.7	M32
4) Control cable	1	34.7	M32
5) Control cable	1/2	22.5	M20

[1] *Tolerance ±0.2 mm.*

10.4.3.8 Entry Holes, Enclosure Size B1, IP55

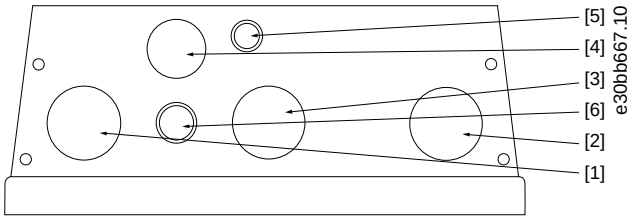

Table 58: Dimensions of Entry Holes for Enclosure Size B1, IP55

Hole number and recommended use	Dimensions [1]		Nearest metric
	UL [in]	[mm]	
1) Mains	1	34.7	M32
2) Motor	1	34.7	M32
3) Brake/loadsharing	1	34.7	M32
4) Control cable	3/4	28.4	M25
5) Control cable	1/2	22.5	M20
6) Control cable [2]	1/2	22.5	M20

[1] *Tolerance ±0.2 mm.*

[2] *Knockout hole.*

10.4.3.9 Entry Holes, Enclosure Size B1, IP55 Threaded Gland Holes

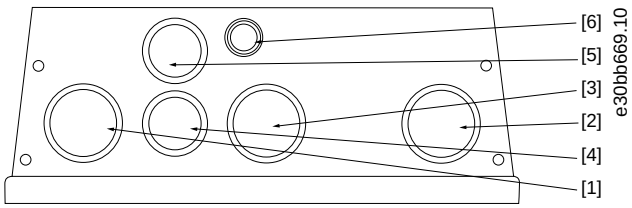

Table 59: Dimensions of Entry Holes for Enclosure Size B1, IP55 Threaded Gland Holes

Hole number and recommended use	Nearest metric
1) Mains	M32
2) Motor	M32
3) Brake/loadsharing	M32
4) Control cable	M25
5) Control cable	M25
6) Control cable	22.5 mm [1]

[1] *Knockout hole*

10.4.3.10 Entry Holes, Enclosure Size B2, IP21

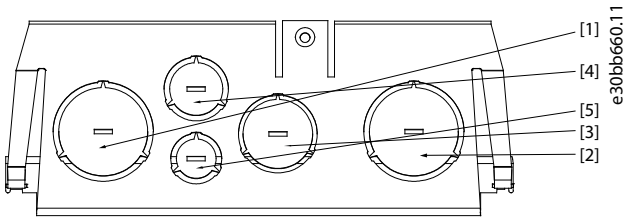

Table 60: Dimensions of Entry Holes for Enclosure Size B2, IP21

Hole number and recommended use	Dimensions [1]		Nearest metric
	UL [in]	[mm]	
1) Mains	1 1/4	44.2	M40
2) Motor	1 1/4	44.2	M40
3) Brake/loadsharing	1	34.7	M32
4) Control cable	3/4	28.4	M25
5) Control cable	1/2	22.5	M20

[1] *Tolerance ±0.2 mm.*

10.4.3.11 Entry Holes, Enclosure Size B2, IP55

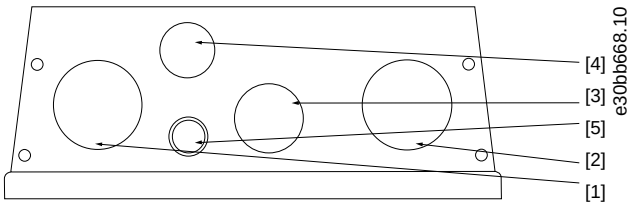

Table 61: Dimensions of Entry Holes for Enclosure Size B2, IP55

Hole number and recommended use	Dimensions [1]		Nearest metric
	UL [in]	[mm]	
1) Mains	1 1/4	44.2	M40
2) Motor	1 1/4	44.2	M40
3) Brake/loadsharing	1	34.7	M32
4) Control cable	3/4	28.4	M25
5) Control cable [2]	1/2	22.5	M20

[1] *Tolerance ±0.2 mm.*

[2] *Knockout hole.*

10.4.3.12 Entry Holes, Enclosure Size B2, IP55 Threaded Gland Holes

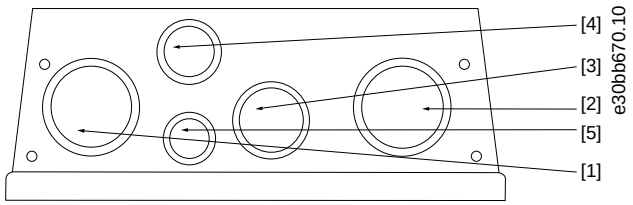

Table 62: Dimensions of Entry Holes for Enclosure Size B2, IP55 Threaded Gland Holes

Hole number and recommended use	Nearest metric
1) Mains	M40
2) Motor	M40
3) Brake/loadsharing	M32
4) Control cable	M25
5) Control cable	M20

10.4.3.13 Entry Holes, Enclosure Size B3, IP21

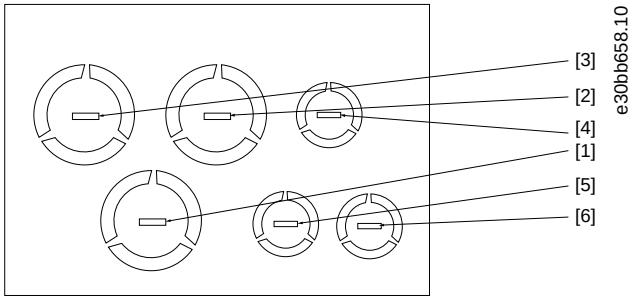

Table 63: Dimensions of Entry Holes for Enclosure Size B3, IP21

Hole number and recommended use	Dimensions [1]		Nearest metric
	UL [in]	[mm]	
1) Mains	1	34.7	M32
2) Motor	1	34.7	M32
3) Brake/loadsharing	1	34.7	M32
4) Control cable	1/2	22.5	M20
5) Control cable	1/2	22.5	M20
6) Control cable	1/2	22.5	M20

[1] *Tolerance ±0.2 mm.*

10.4.3.14 Entry Holes, Enclosure Size C1, IP21

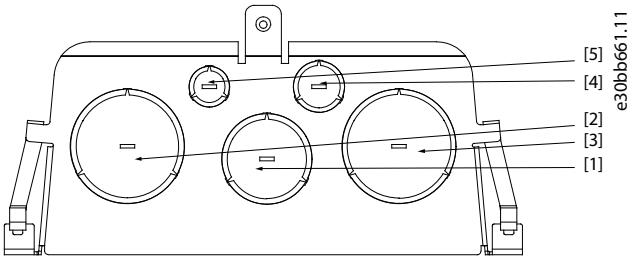

Table 64: Dimensions of Entry Holes for Enclosure Size C1, IP21

Hole number and recommended use	Dimensions [1]		Nearest metric
	UL [in]	[mm]	
1) Mains	2	63.3	M63
2) Motor	2	63.3	M63
3) Brake/loadsharing	1 1/2	50.2	M50
4) Control cable	3/4	28.4	M25

Hole number and recommended use	Dimensions [1]		Nearest metric
5) Control cable	1/2	22.5	M20

[1] *Tolerance ±0.2 mm.*

10.4.3.15 Entry Holes, Enclosure Size C2, IP21

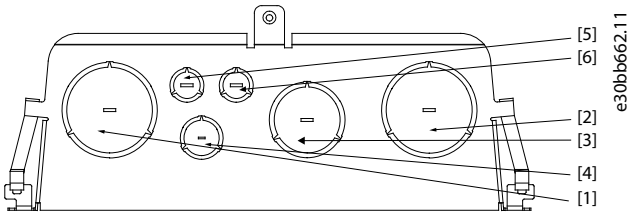

Table 65: Dimensions of Entry Holes for Enclosure Size C2, IP21

Hole number and recommended use	Dimensions [1]		Nearest metric
	UL [in]	[mm]	
1) Mains	2	63.3	M63
2) Motor	2	63.3	M63
3) Brake/loadsharing	1 1/2	50.2	M50
4) Control cable	3/4	28.4	M25
5) Control cable	1/2	22.5	M20
6) Control cable	1/2	22.5	M20

[1] *Tolerance ±0.2 mm.*

10.4.4 Tightening Torques for Cover

Table 66: Tightening Torque Values [Nm]

Enclosure size	IP20	IP21	IP55	IP66
A1	(1)	(2)	(2)	(2)
A2	(1)	(1)	(2)	(2)
A3	(1)	(1)	(2)	(2)
A4/A5	(2)	(2)	2	2
B1	(2)	(1)	2.2	2.2
B2	(1)	(2)	2.2	2.2
B3	(1)	(2)	(2)	(2)
B4	(1)	(2)	(2)	(2)

Enclosure size	IP20	IP21	IP55	IP66
C1	*(2)*	*(1)*	2.2	2.2
C2	*(2)*	*(1)*	2.2	2.2
C3	2	*(2)*	*(2)*	*(2)*
C4	2	*(2)*	*(2)*	*(2)*

[1] *No screws to tighten.*

[2] *Does not exist.*

10.5 Control Wiring and Terminals

10.5.1 Shielded Control Cables

Usually, the preferred method is to secure control and serial communication cables with shielding clamps provided at both ends to ensure the best possible high frequency cable contact.

If the ground potential between the drive and the PLC is different, electric noise could disturb the entire system. Solve this problem by fitting an equalizing cable as close as possible to the control cable. Minimum cable cross-section: 16 mm^2 (6 AWG).

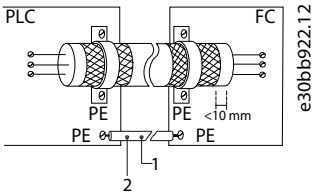

1	Minimum 16 mm^2 (6 AWG)	**2**	Equalizing cable

Illustration 114: Shielding Clamps at Both Ends

10.5.1.1 50/60 Hz Ground Loops

With long control cables, ground loops may occur. To eliminate ground loops, connect 1 end of the shield to the ground with a 100 nF capacitor (keeping leads short).

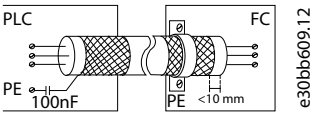

Illustration 115: Connection with a 100 nF Capacitor

10.5.1.2 Avoid EMC Noise on Serial Communication

This terminal is connected to ground via an internal RC link. Use twisted-pair cables to reduce interference between conductors. The recommended method is shown in the following illustration.

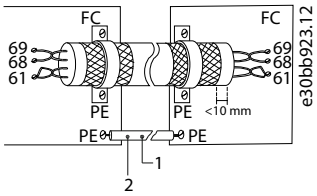

1 Minimum 16 mm^2 (6 AWG)	**2** Equalizing cable

Illustration 116: Twisted-pair Cables

Alternatively, the connection to terminal 61 can be omitted.

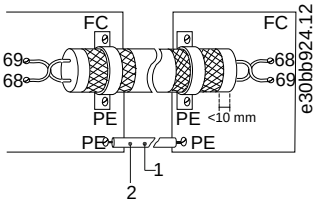

1 Minimum 16 mm^2 (6 AWG)	**2** Equalizing cable

Illustration 117: Twisted-pair Cables without Terminal 61

10.5.2 Wiring to Control Terminals

Control terminal connectors can be unplugged from the drive for ease of installation, as shown in illustration 119.

NOTICE

Keep control cables as short as possible and separate them from high-power cables to minimize interference.

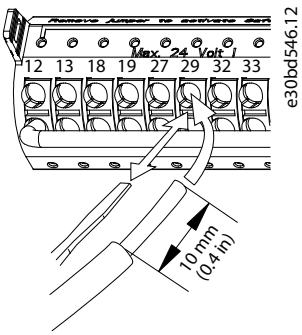

Illustration 118: Connecting Control Wires

10.5.3 Control Terminal Types

Find the location of the removable drive connectors in illustration 119 and illustration 120. Terminal functions and default settings are summarized in 10.5.4 Terminal Descriptions.

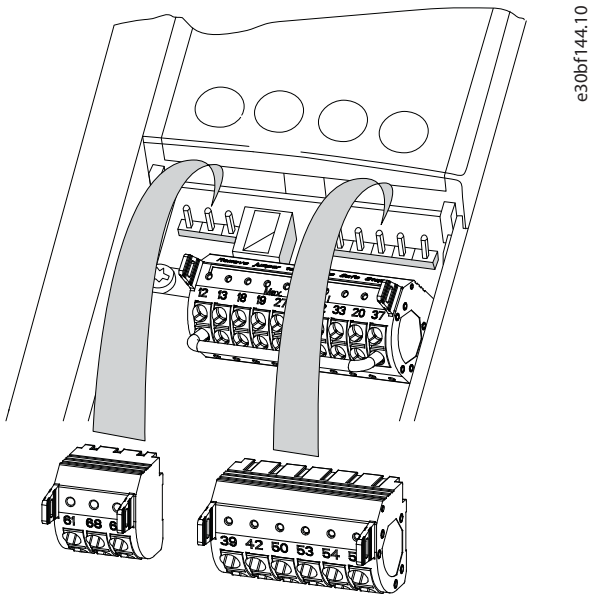

Illustration 119: Control Terminal Locations

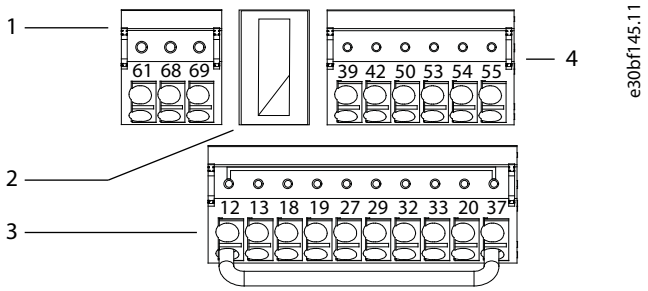

1	Serial communication connector	**2**	USB port
3	Digital input/output connector	**4**	Analog input/output connector

Illustration 120: Terminal Numbers on the Connectors

- Serial communication connector provides 2 terminals (+)68 and (-) 69 for an RS485 serial communication.
- USB port available for use with the MCT 10 Set-up Software.
- Digital input/output connector provides:
  - 4 programmable digital input terminals.
  - 2 additional digital terminals programmable as either input or output.
  - A 24 V DC terminal supply voltage.
  - A common for optional customer-supplied 24 V DC voltage.
- Analog input/output connector provides:
  - 2 analog inputs.
  - 1 analog output.
  - 10 V DC supply voltage.
  - Commons for the inputs and output.

10.5.4 Terminal Descriptions

Table 67: Digital Inputs/Outputs

Terminal	Parameter	Default setting	Description
12, 13	–	+24 V DC	+24 V DC supply voltage for digital inputs and external transducers. Maximum output current 200 mA for all 24 V loads.
18	*Parameter 5-10 Terminal 18 Digital Inputs*	*[8] Start*	Digital inputs
19	*Parameter 5-11 Terminal 19 Digital Inputs*	*[0] No operation*	
32	*Parameter 5-14 Terminal 32 Digital Input*	*[0] No operation*	
33	*Parameter 5-15 Terminal 33 Digital Input*	*[0] No operation*	
27	*Parameter 5-12 Terminal 27 Digital Input*	*[2] Coast inverse*	For digital input or output. Default setting is input.
29	*Parameter Terminal 29 Digital Input*	*[14] Jog*	
20	–	–	Common for digital inputs and 0 V potential for 24 V supply.
37	–	Safe Torque Off (STO)	Safe input (optional). Used for STO.

Table 68: Analog Inputs/Outputs

Terminal	Parameter	Default setting	Description
39	–	–	Common for analog output.
42	*Parameter 6-50 Terminal 42 Output*	Speed 0–high limit	Programmable analog output. 0–20 mA or 4–20 mA at a maximum of 500 Ω.
50	–	+10 V DC	10 V DC analog supply voltage potentiometer or thermistor. 15 mA maximum.

Terminal	Parameter	Default setting	Description
53	*Parameter group 6-1* Analog Input 1*	Reference	Analog input. For voltage or current. Switches A53 and A54 select mA or V.
54	*Parameter group 6-1* Analog Input 2*	Feedback	
55	–	–	Common for analog input.

Table 69: Serial Communication

Terminal	Parameter	Default setting	Description
61	–	–	Integrated RC-filter for cable shield. ONLY for connecting the shield if EMC problems occur.
68 (+)	*Parameter group 8-3* FC Port Settings*	–	RS485 interface. A control card switch is provided for termination resistance.
69 (-)	*Parameter group 8-3* FC Port Settings*	–	

Table 70: Relays

Terminal	Parameter	Default setting	Description
01, 02, 03	*Parameter 5-40 Function Relay [0]*	*[9] Alarm*	Form C relay output. For AC or DC voltage and resistive or inductive loads.
04, 05, 06	*Parameter 5-40 Function Relay [1]*	*[5] Running*	

Table 71: Additional Terminals

Terminal	Location
1 form C relay outputs	The location of the outputs depend on the drive configuration.
Terminals on built-in optional equipment	See the manual provided with the equipment option.

10.6 Fuses and Circuit Breakers

10.6.1 Fuse Recommendations

Fuses ensure that possible damage to the drive is limited to damages inside the unit. Danfoss recommends fuses and/or circuit breakers on the supply side as protection. For further information, see *Application Note Fuses and Circuit Breakers*.

NOTICE

Use of fuses on the supply side is mandatory for IEC 60364 (CE) and NEC 2009 (UL) compliant installations.

Recommendations

- gG type fuses.
- Moeller type circuit breakers. For other circuit breaker types, ensure that the energy into the drive is equal to or lower than the energy provided by Moeller types.

For further information, see *Application Note Fuses and Circuit Breakers*.

The recommended fuses in and are suitable for use on a circuit capable of 100000 A_{rms} (symmetrical), depending on the drive voltage rating. With the proper fusing, the drive short circuit current rating (SCCR) is 10000 A_{rms}.

10.6.2 CE Compliance

Table 72: 200–240 V, Enclosure Sizes A, B, and C

Enclosure	Power [kW (hp)]	Recommended fuse size	Recommended maximum fuse	Recommended circuit breaker Moeller	Maximum trip level [A]
A1	0.25–1.5 (0.34–2.0)	gG-10	gG-25	PKZM0-16	16
A2	0.25–1.5 (0.34–2.0)	gG-10	gG-25	PKZM0-25	25
	2.2 (3.0)	gG-16			
A3	3.0 (4.0)	gG-16	gG-32	PKZM0-25	25
	3.7 (5.0)	gG-20			
A4	0.25–1.5 (0.34–2.0)	gG-10	gG-32	PKZM0-25	25
	2.2 (3.0)	gG-16			
A5	0.25–1.5 (0.34–2.0)	gG-10	gG-32	PKZM0-25	25
	2.2–3.0 (3.0–4.0)	gG-16			
	3.7 (5.0)	gG-20			
B1	5.5 (7.5)	gG-25	gG-80	PKZM4-63	63
	7.5 (10.0)	gG-32			
B2	11.0 (15.0)	gG-50	gG-100	NZMB1-A100	100
B3	5.5 (7.5)	gG-25	gG-63	PKZM4-50	50
B4	7.5 (10.0)	gG-32	gG-125	NZMB1-A100	100
	11.0 (15.0)	gG-50			
	15.0 (20.0)	gG-63			
C1	15.0 (20.0)	gG-63	gG-160	NZMB2-A200	160
	18.5 (25.0)	gG-80			
	22.0 (30.0)	gG-100	aR-160		
C2	30.0 (40.0)	aR-160	aR-200	NZMB2-A250	250
	37.0 (50.0)	aR-200	aR-250		
C3	18.5 (25.0)	gG-80	gG-150	NZMB2-A200	150
	22.0 (30.0)	aR-125	aR-160		
C4	30.0 (40.0)	aR-160	aR-200	NZMB2-A250	250
	37.0 (50.0)	aR-200	aR-250		

Table 73: 380–500 V, Enclosure Sizes A, B, and C

Enclosure	Power [kW (hp)]	Recommended fuse size	Recommended maximum fuse	Recommended circuit breaker Moeller	Maximum trip level [A]
A1	0.37–1.5 (0.5–2.0)	gG-10	gG-25	PKZM0-16	16
A2	0.37–3.0 (0.5–4.0)	gG-10	gG-25	PKZM0-25	25
	4.0 (5.0)	gG-16			
A3	5.5–7.5 (7.5–10.0)	gG-16	gG-32	PKZM0-25	25
A4	0.37-3.0 (0.5–4.0)	gG-10	gG-32	PKZM0-25	25
	4.0 (5.0)	gG-16			
A5	0.37–3.0 (0.5–4.0)	gG-10	gG-32	PKZM0-25	25
	4.0–7.5 (5.0–10.0)	gG-16			
B1	11–15 (15.0–20.0)	gG-40	gG-80	PKZM4-63	63
B2	18.5 (25.0)	gG-50	gG-100	NZMB1-A100	100
	22.0 (30.0)	gG-63			
B3	11–15 (15.0–20.0)	gG-40	gG-63	PKZM4-50	50
B4	18.5 (25.0)	gG-50	gG-125	NZMB1-A100	100
	22.0 (30.0)	gG-63			
	30.0 (40.0)	gG-80			
C1	30.0 (40.0)	gG-80	gG-160	NZMB2-A200	160
	37.0 (50.0)	gG-100			
	45.0 (60.0)	gG-160			
C2	55.0 (75.0)	aR-200	aR-250	NZMB2-A250	250
	75.0 (100.0)	aR-250			
C3	37.0 (50.0)	gG-100	gG-150	NZMB2-A200	150
	45.0 (60.0)	gG-160	gG-160		
C4	55.0 (75.0)	aR-200	aR-250	NZMB2-A250	250
	75.0 (100.0)	aR-250			

Table 74: 525–600 V, Enclosure Sizes A, B, and C

Enclosure	Power [kW (hp)]	Recommended fuse size	Recommended maximum fuse	Recommended circuit breaker Moeller	Maximum trip level [A]
A2	0-75-4.0 (1.0-5.0)	gG-10	gG-25	PKZM0-25	25
A3	5.5 (7.5)	gG-10	gG-32	PKZM0-25	25
	7.5 (10.0)	gG-16			
A5	5.5 (7.5)	gG-10	gG-32	PKZM0-25	25
	7.5 (10.0)	gG-16			

Enclosure	Power [kW (hp)]	Recommended fuse size	Recommended maximum fuse	Recommended circuit breaker Moeller	Maximum trip level [A]
B1	11.0 (15.0)	gG-25	gG-80	PKZM4-63	63
	15.0 (20.0)	gG-32			
	18.5 (25.0)	gG-40			
B2	22.0 (30.0)	gG-50	gG-100	NZMB1-A100	100
	30.0 (40.0)	gG-63			
B3	11.0 (15.0)	gG-25	gG-63	PKZM4-50	50
	15.0 (20.0)	gG-32			
B4	18.5 (25.0)	gG-40	gG-125	NZMB1-A100	100
	22.0 (30.0)	gG-50			
	30.0 (40.0)	gG-63			
C1	37.0 (50.0)	gG-63	gG-160	NZMB2-A200	160
	45.0 (60.0)	gG-100			
	55.0 (60.0)	aR-160	aR-250		
C2	75.0 (100.0)	aR-200	aR-250	NZMB2-A250	250
C3	37.0 (50.0)	gG-63	gG-150	NZMB2-A200	150
	45.0 (60.0)	gG-100	gG-150	NZMB2-A200	
C4	55.0 (75.0)	aR-160	aR-250	NZMB2-A250	250
	75.0 (100.0)	aR-200			

Table 75: 525–690 V, Enclosure Sizes A, B, and C

Enclosure	Power [kW (hp)]	Recommended fuse size	Recommended maximum fuse	Recommended circuit breaker Moeller	Maximum trip level [A]
A3	1.1 (1.5)	gG-6	gG-25	PKZM0-16	16
	1.5 (2.0)	gG-6	gG-25		
	2.2 (3.0)	gG-6	gG-25		
	3.0 (4.0)	gG-10	gG-25		
	4.0 (5.0)	gG-10	gG-25		
	5.5 (7.5)	gG-16	gG-25		
	7.5 (10.0)	gG-16	gG-25		
B2/B4	11.0 (15.0)	gG-25	gG-63	–	–
	15.0 (20.0)	gG-32			
	18.5 (25.0)	gG-32			
	22.0 (30.0)	gG-40			
B4/C2	30.0 (40.0)	gG-63	gG-80	–	–

Enclosure	Power [kW (hp)]	Recommended fuse size	Recommended maximum fuse	Recommended circuit breaker Moeller	Maximum trip level [A]
C2/C3	37.0 (50.0)	gG-63	gG-100	–	–
	45.0 (60.0)	gG-80	gG-125		
C2	55.0 (75.0)	gG-100	gG-160	–	–
	75.0 (100.0)	gG-125			

10.6.3 UL Compliance

NOTICE

UL COMPLIANCE

To comply with NEC 2017, it is mandatory to use fuses or circuit breakers. Danfoss recommends using a selection of the fuses listed in the following tables. These fuses are suitable for use on a circuit capable of delivering 100000 A_{rms} (symmetrical), 240 V, 480 V, 500 V, or 600 V depending on the drive voltage rating. With the proper fusing, the drive short circuit current rating (SCCR) is 10000 A_{rms}.

For semiconcutor fuse types, the drive controller and the overcurrent protection device must be integrated within the same overall assembly.

Table 76: UL Fuse Classification Chart

UL class	Fuse overload characteristics	Interrupting rating [A]	AC voltage rating [V]	Available ampere rating
RK1	Ultra fast-acting	200.000	250 600	1–600
T	Fast-acting	200.000	300 600	1–1.200
J	Fast-acting	200.000	600	1–600
CC	Fast acting	200.000	600	5–30

Table 77: Recommended Maximum UL Fuse Class, Voltage Range 3x200–240 V, Enclosure Sizes A, B, and C

	Class fuses		Semiconductor fuses			
Power [kW (hp)]	RK1/J/T [A]	CC [A]	SIBA	Littelfuse	Ferraz-Shawmut (Mersen)	Bussmann (Eaton)
0.25–0.37 (0.34–0.5)	5	5	5017906-005	–	–	FWX-5
0.55–1.1 (0.75–1.5)	10	10	5017906-010	–	–	FWX-10
1.5 (2.0)	15	15	5017906-016	–	–	FWX-15
2.2 (3.0)	20	20	5017906-020	–	–	FWX-20
3.0 (4.0)	25	25	5017906-025	–	–	FWX-25
3.7 (5.0)	30	30	5012406-032	–	–	FWX-30
5.5 (7.5)	50	–	5014006-050	–	–	FWX-50

	Class fuses		Semiconductor fuses			
7.5 (10.0)	60	–	5014006-063	–	–	FWX-60
11.0 (15.0)	80	–	5014006-080	–	–	FWX-80
15–18.5 (20.0–25.0)	125	–	2028220-125	–	–	FWX-125
22.0 (30.0)	150	–	2028220-150	L25S-150	A25X-150	FWX-150
30.0 (40.0)	200	–	2028220-200	L25S-200	A25X-200	FWX-200
37.0 (50.0)	250	–	2028220-250	L25S-250	A25X-250	FWX-250

Table 78: Recommended Maximum UL Fuse Class, Voltage Range 380–500 V, Enclosure Sizes A, B, and C

	Class fuses		Semiconductor fuses			
Power [kW (hp)]	**RK1/J/T [A]**	**CC [A]**	**SIBA**	**Littelfuse**	**Ferraz-Shawmut (Mersen)**	**Bussmann (Eaton)**
0.37–1.1 (0.5–1.5)	6	6	5017906-006	–	–	FWH-6
1.5–2.2 (2.0–3.0)	10	10	5017906-010	–	–	FWH-10
3.0 (4.0)	15	15	5017906-016	–	–	FWH-15
4.0 (5.0)	20	20	5017906-020	–	–	FWH-20
5.5 (7.5)	25	25	5017906-025	–	–	FWH-25
7.5 (10.0)	30	30	5012406-032	–	–	FWH-30
11.0 (15.0)	40	–	5014006-040	–	–	FWH-40
15.0 (20.0)	50	–	5014006-050	–	–	FWH-50
18.5 (25.0)	60	–	5014006-063	–	–	FWH-60
22.0 (30.0)	80	–	2028220-100	–	–	FWH-80
30.0 (40.0)	100	–	2028220-125	–	–	FWH-100
37.0 (50.0)	125	–	2028220-125	–	–	FWH-125
45.0 (60.0)	150	–	2028220-160	–	–	FWH-150
55.0 (75.0)	200	–	2028220-200	L50-S-225	A50-P-225	FWH-200
75.0 (100.0)	250	–	2028220-250	L50-S-250	A50-P-250	FWH-250

Table 79: Recommended Maximum UL Fuse Class, Voltage Range 525–690 V, Enclosure Sizes A, B, and C

	Class fuses		Semiconductor fuses
Power [kW (hp)]	**RK1/J/T [A]**	**CC [A]**	**SIBA**
1.1 (1.5)	5 (1)	5	5017906-005
1.5–2.2 (2.0–3.0)	10	10	5017906-010
3.0 (4.0)	15	15	5017906-016
4.0 (5.0)	20	20	5017906-020
5.5 (7.5)	25	25	5017906-025
7.5 (10.0)	30	30	5017906-030

	Class fuses		Semiconductor fuses
11.0 (15.0)	35	–	5014006-040
15.0 (20.0)	45	–	5014006-050
18.5 (25.0)	50	–	5014006-050
22.0 (30.0)	60	–	5014006-063
30.0 (40.0)	80	–	5014006-080
37.0 (50.0)	100	–	5014006-100
45.0 (60.0)	125	–	2028220-125
55.0 (75.0)	150	–	2028220-150
75.0 (100.0)	175	–	2028220-200

[1] *Bussmann Class T allowed up to 6 A.*

NOTICE

UL compliance only 525–600 V.

10.7 Relays

Relay 1

- Terminal 01: Common.
- Terminal 02: Normally open 240 V.
- Terminal 03: Normally closed 240 V.

Relay 2 (not FC 301)

- Terminal 04: Common.
- Terminal 05: Normally open 400 V.
- Terminal 06: Normally closed 240 V.

More relay outputs are available by using the VLT® Relay Option Module MCB 105.

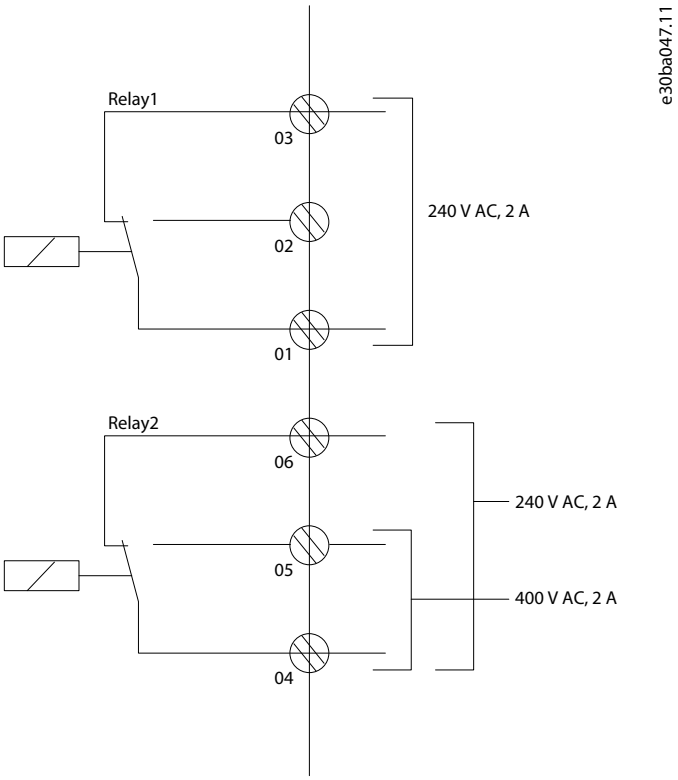

Illustration 121: Relay Outputs 1 and 2

To set the relay output, see *parameter group 5-4* Relays*.

Table 80: Description of Relays

Terminal numbers	Function
01-02	Make (normally open)
01-03	Break (normally closed)
04-05	Make (normally open)
04-06	Break (normally closed)

10.7.1 Overview of Relay Terminals

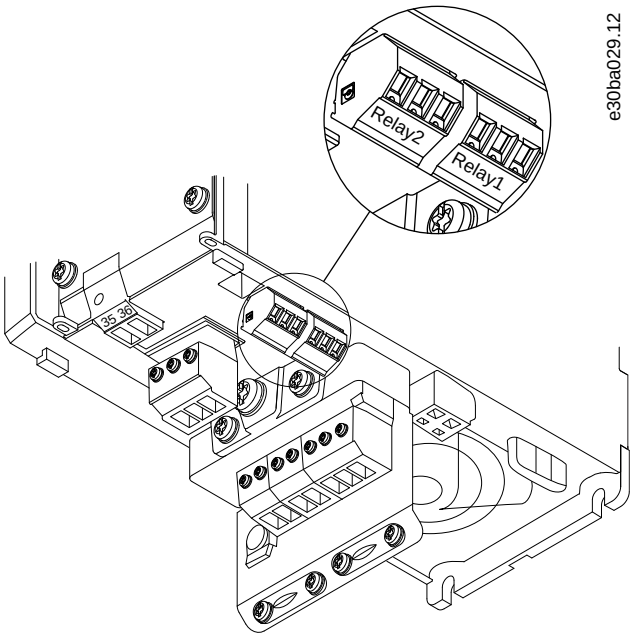

Illustration 122: Terminals for Relay Connection (Enclosure Sizes A1, A2, and A3)

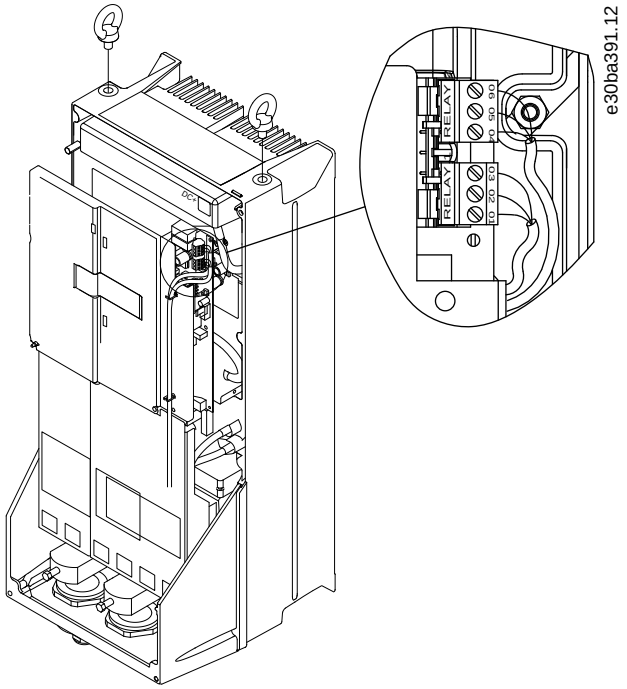

Illustration 123: Terminals for Relay Connection (Enclosure Sizes C1 and C2)

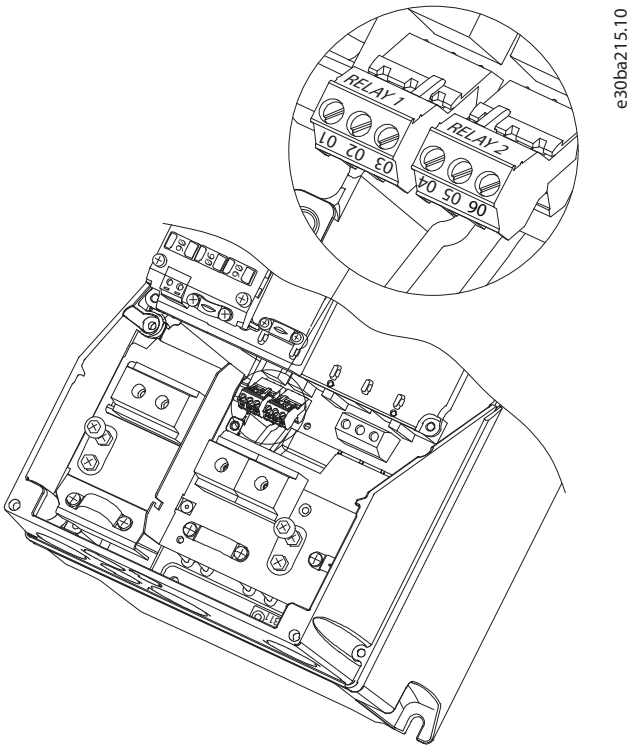

Illustration 124: Terminals for Relay Connection (Enclosure Sizes A5, B1, and B2)

10.8 Disconnects and Contactors

Assembling of IP55/NEMA Type 12 (enclosure size A5) with mains disconnector.

The mains switch is on the left side of enclosure sizes B1, B2, C1, and C2. The mains switch on A5 enclosures is on the right side.

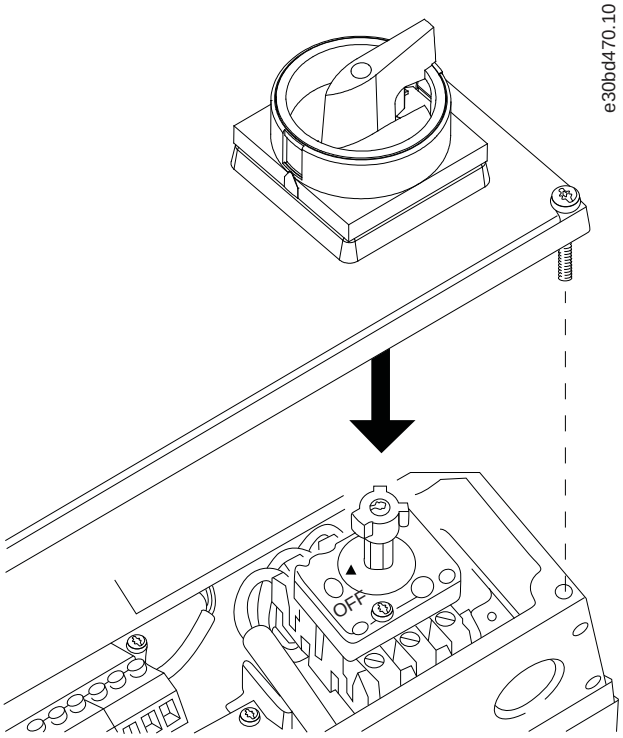

Illustration 125: Location of Mains Switch (Enclosure Size A5)

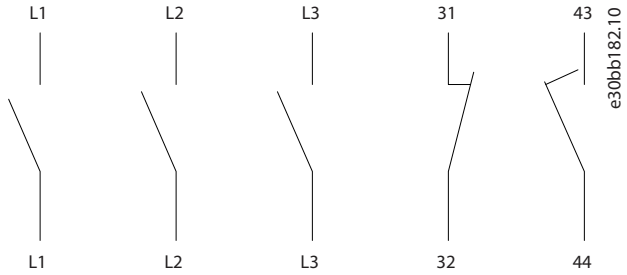

Illustration 126: Terminal Connections for A4, A5, B1, and B2

Enclosure size	Type
A4/A5	Kraus&Naimer KG20A T303
B1/B2	Kraus&Naimer KG64 T303

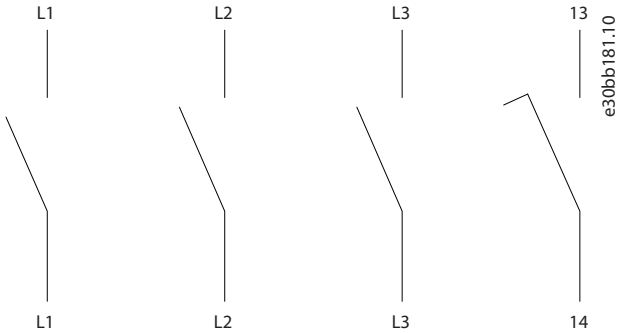

Illustration 127: Terminal Connections for C1 and C2

Enclosure size	Type
C1	Kraus&Naimer KG100 T303
C1	Kraus&Naimer KG105 T303
C2	Kraus&Naimer KG160 T303

10.9 Motor

All types of 3-phase asynchronous standard motors can be used with a drive. The factory setting is for clockwise rotation with the drive output connected as follows:

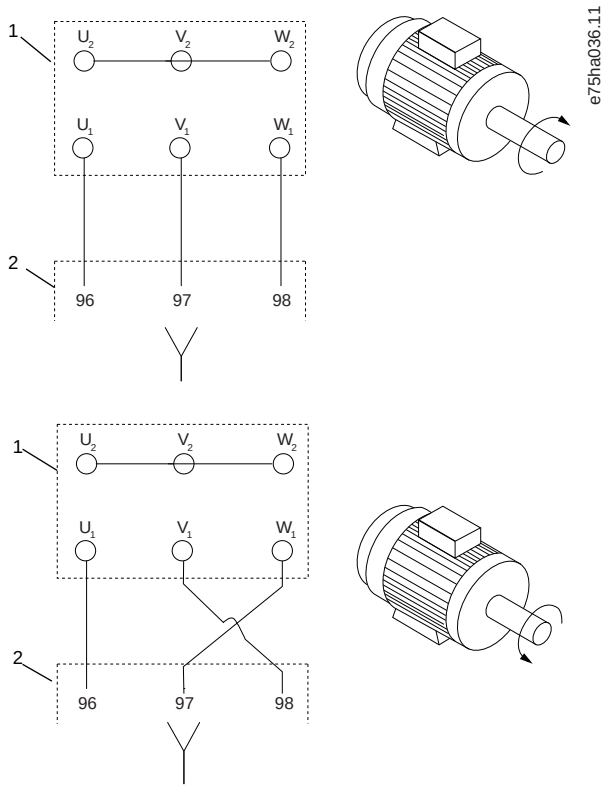

Illustration 128: Terminal Connection for Clockwise and Counterclockwise Rotation

Change direction of rotation by switching 2 phases in the motor cable or by changing the setting of *parameter 4-10 Motor Speed Direction*. Check the motor rotation in *parameter 1-28 Motor Rotation Check* and follow the steps in the display.

10.9.1 Motor Thermal Protection

The electronic thermal relay in the drive has received UL approval for single motor overload protection.

For motor thermal protection, it is also possible to use the VLT® PTC Thermistor Card MCB 112 option card. This card provides ATEX certification to protect motors in explosion hazardous areas Zone 1/21 and Zone 2/22. Combining ATEX ETR with the use of MCB 112 enables control of an Ex-e or EX-n motor in explosion hazardous ares.

Consult the Programming Guide for details on how to set up the drive for safe operation of Ex-e or Ex-n motors.

10.9.2 Parallel Connection of Motors

The drive can control several parallel-connected motors. When using parallel motor connection, observe the following:

- Recommended to run applications with parallel motors in U/F mode *parameter 1-01 Motor Control Principle* [0]. Set the U/F graph in *parameter 1-55 U/f Characteristic - U* and *parameter 1-56 U/f Characteristic - F*.
- VCC+ mode may be used in some applications.
- The total current consumption of the motors must not exceed the rated output current I_{INV} for the drive.
- If motor sizes are widely different in winding resistance, starting problems may occur due to too low motor voltage at low speed.
- The electronic thermal relay (ETR) of the drive cannot be used as motor overload protection for the individual motor. Provide further motor overload protection by including thermistors in each motor winding or individual thermal relays.

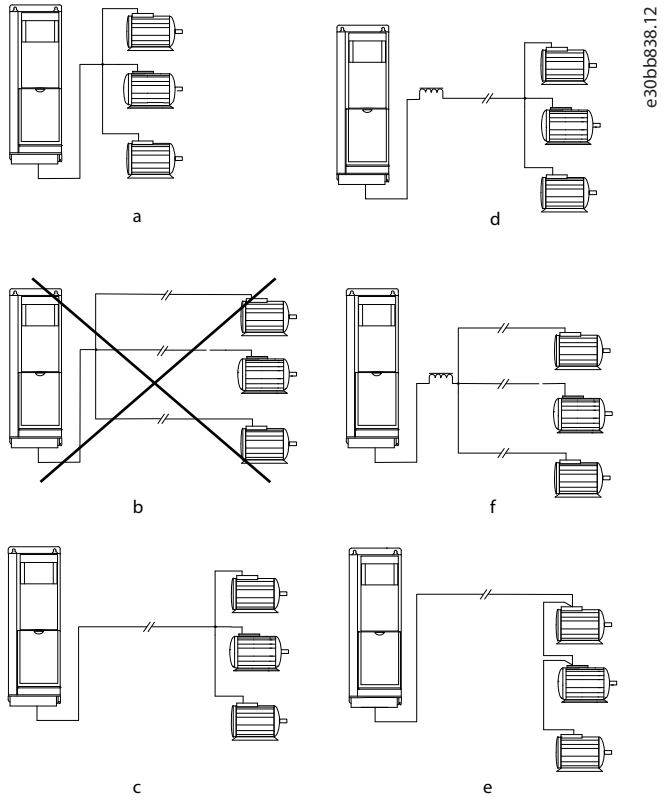

A	Installations with cables connected in a common joint as shown in A and B are only recommended for short cable lengths.	**B**	Be aware of the maximum motor cable length specified in 8.6.1 Cable Lengths and Cross-sections for Control Cables.
C	The total motor cable length specified in 8.6.1 Cable Lengths and Cross-sections for Control Cables is valid as long as the parallel cables are kept short, less than 10 m (32 ft) each.	**D**	Consider voltage drop across the motor cables.
E	Consider voltage drop across the motor cables.	**F**	The total motor cable length specified in 8.6.1 Cable Lengths and Cross-sections for Control Cables is valid as long as the parallel cables are kept short, less than 10 m (32 ft) each.

Illustration 129: Different Parallel Connections of Motors

10.9.3 Motor Insulation

Modern motors for use with drives have a high degree of insulation to account for new generation high-efficiency IGBTs with high dU/dt. For retrofit in old motors, confirm the motor insulation or mitigate with dU/dt filter or, if necessary, a sine-wave filter.

For motor cable lengths ≤ the maximum cable length listed in 8.6.1 Cable Lengths and Cross-sections for Control Cables, the motor insulation ratings listed in table 81 are recommended. If a motor has lower insulation rating, use a dU/dt or sine-wave filter.

Table 81: Motor Insulation Ratings

Nominal mains voltage [V]	Motor insulation [V]
$U_N \leq 420$	Standard U_{LL}=1300
420 V < $U_N \leq 500$	Reinforced U_{LL}=1600
500 V < $U_N \leq 600$	Reinforced U_{LL}=1800
600 V < $U_N \leq 690$	Reinforced U_{LL}=2000

10.9.4 Motor Bearing Currents

To minimize DE (Drive End) bearing and shaft currents, ground the drive, motor, driven machine, and motor to the driven machine properly. For more information, refer to the *Minimizing Bearing Failures in AC Drive Systems User Guide*.

Standard mitigation strategies

- Use an insulated bearing.
- Apply rigorous installation procedures:
  - Ensure that the motor and load motor are aligned.
  - Strictly follow the EMC Installation guideline.
  - Reinforce the PE so the high-frequency impedance is lower in the PE than the input power leads.
  - Provide a good high-frequency connection between the motor and the drive for instance by shielded cable which has a 360° connection in the motor and the drive.
  - Make sure that the impedance from the drive to the building ground is lower than the grounding impedance of the machine. This can be difficult for pumps.
  - Make a direct ground connection between the motor and load motor.
- Lower the IGBT switching frequency.
- Modify the inverter waveform, 60° AVM vs. SFAVM.
- Install a shaft grounding system or use an isolating coupling.
- Apply conductive lubrication.
- Use minimum speed settings if possible.
- Try to ensure that the line voltage is balanced to ground. This can be difficult for IT, TT, TN-CS, or Grounded leg systems.

10.10 Braking

10.10.1 Selection of Brake Resistor

To handle higher demands by regenerative braking, a brake resistor is necessary. Using a brake resistor ensures that the energy is absorbed in the brake resistor and not in the drive. For more information, see the VLT® Brake Resistor MCE 101 Design Guide.

If the amount of kinetic energy transferred to the resistor in each braking period is not known, the average power can be calculated based on the cycle time and braking time, also called intermittent duty cycle. The resistor intermittent duty cycle is an indication of the duty cycle at which the resistor is active. See illustration 130 for a typical braking cycle.

NOTICE

Motor suppliers often use S5 when stating the allowed load, which is an expression of intermittent duty cycle.

The intermittent duty cycle for the resistor is calculated as follows:

Duty cycle=t_b /T

T=cycle time in s.

t_b is the braking time in s (of the cycle time).

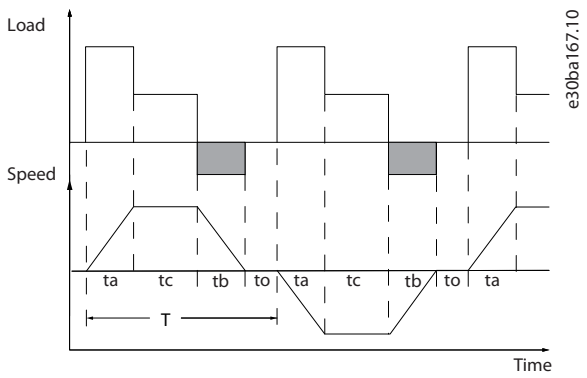

Illustration 130: Dynamic Braking Cycle Time

Brake resistors have a duty cycle of 5%, 10%, and 40%. If a 10% duty cycle is applied, the brake resistors are able to absorb brake power for 10% of the cycle time. The remaining 90% of the cycle time is spent on dissipating excess heat.

Table 82: Braking at High Overload Torque Level

	Cycle time (s)	Braking duty cycle at 100% torque	Braking duty cycle at overtorque (150/160%)
200–240 V			
PK25–P11K	120	Continuous	40%
P15K–P37K	300	10%	10%
380–500 V			
PK37–P75K	120	Continuous	40%
P90K–P160	600	Continuous	10%
P200–P800	600	40%	10%
525–600 V			
PK75–P75K	120	Continuous	40%
525–690 V			
P37K–400	600	40%	10%
P500–P560	600	40% (1)	10% (2)
P630–P1M0	600	40%	10%

[1] *500 kW at 86% braking torque/560 kW at 76% brake power.*

[2] *500 kW at 130% braking torque/560 kW at 115% brake power.*

NOTICE

Ensure that the resistor is designed to handle the required braking time.

The maximum allowed load on the brake resistor is stated as a peak power at a given intermittent duty cycle and can be calculated as:

$$R_{br}\ [\Omega] = \frac{U_{dc}^2}{P_{peak}}$$

where

$P_{peak} = P_{motor} \times M_{br}\ [\%] \times \eta_{motor} \times \eta_{VLT} [W]$

The brake resistance depends on the DC-link voltage (U_{dc}).

Table 83: DC-link Voltage (UDC), FC 301/FC 302

Size [V]	Brake active [V DC]	High-voltage warning [V DC]	Overvoltage alarm [V DC]
FC 301, 3x200–240 V [1]	365	405	410
FC 301, 3x200–240 V [2]	390	405	410
FC 302, 3x200–240 V	390	405	410
FC 301, 3x380–480 [1]	728	810	820
FC 301, 3x380–480 V [2]	778	810	820
FC 302, 3x380–500 V [3]	810	840	855
FC 302, 3x380–500 V [4]	810	828	855
FC 302, 3x525–600 V [3]	943	965	975
FC 302, 3x525–300 V [4]	1099	1109	1130
FC 302, 3x525–690 V	1099	1109	1130

[1] *Enclosure size A.*

[2] *Enclosure sizes B, C.*

[3] *Enclosure sizes A, B, C.*

[4] *Enclosure sizes D, E, F.*

NOTICE

Check that the brake resistor can handle a voltage of 4 V, or 1130 V. Danfoss brake resistors are rated for use on all Danfoss drives.

Danfoss recommends a brake resistance R_{rec} that can guarantee that the drive can brake at the highest brake power ($M_{br(\%)}$) of 150%. The formula can be written as:

$$200\ V:\ R_{\text{rec}} = \frac{107780}{P_{\text{motor}}}[\Omega]$$

$$500\ V:\ R_{\text{rec}} = \frac{464923}{P_{\text{motor}}}[\Omega]$$

$$600\ V:\ R_{\text{rec}} = \frac{630137}{P_{\text{motor}}}[\Omega]$$

$$690\ V:\ R_{\text{rec}} = \frac{832664}{P_{\text{motor}}}[\Omega]$$

NOTICE

The brake resistor circuit resistance selected should not be lower than what Danfoss recommends respecting the current limits.

NOTICE

If a higher value is selected, the brake energy is reduced accordingly to a value below 150%.

NOTICE

If a short circuit occurs in the brake transistor, power dissipation in the brake resistor is only prevented by using a mains switch or contactor to disconnect the mains from the drive. Alternatively, use a switch in the brake circuit. Uninterrupted power dissipation in the brake resistor can cause overheating, damage, or fire.

⚠ WARNING ⚠

RISK OF FIRE

The brake resistors become hot during braking. Failure to place the brake resistor in a secure area can result in property damage and/or serious injury.

- Ensure that the brake resistor is placed in a secure environment to avoid fire risk.
- Do no touch the brake resistor during or after braking to avoid serious burns.

10.10.2 Control with Brake Function

A relay/digital output can be used to protect the brake resistor against overloading or overheating by generating a fault in the drive. If the brake IGBT is overloaded or overheated, the relay/digital output signal from the drive to the brake turns off the brake IGBT. The relay/digital output signal does not protect against a short circuit in the brake IGBT or a ground fault in the brake module or wiring. If a short circuit occurs in the brake IGBT, Danfoss recommends a means to disconnect the brake.

Furthermore, the brake enables reading out the momentary power and the average power of the latest 120 s. The brake can monitor the power energizing and make sure that it does not exceed the limit selected in the brake monitor function. Consult the Operating Guide for more details.

NOTICE

Monitoring the brake power is not a safety function. A thermal switch connected to an external contactor is required for that purpose. The brake resistor circuit is not ground-leakage protected.

Overvoltage control (OVC) can be selected as an alternative brake function in parameters for overvoltage control. This function is active for all units and ensures that if the DC-link voltage increases, the output frequency also increases to limit the voltage from the DC link, which avoids a trip.

NOTICE

OVC cannot be activated when running a PM motor, while parameters for motor construction is set to PM non-salient SPM.

NOTICE

MORE REQUIREMENTS FOR BRAKING APPLICATIONS

When the motor brakes the machinery, the DC-link voltage of the drive increases. The effect of the increase equals an increase of the motor supply voltage of up to 20%. Consider this voltage increase when specifying the motor insulation requirements if the motor will be braking a large part of its operational time. **Example:** Motor insulation requirement for a 400 V AC mains voltage application must be selected as if the drive were supplied with 480 V.

10.11 Residual Current Device

Use RCD relays, multiple protective earthing, or grounding as extra protection to comply with local safety regulations. If a ground fault appears, a DC content may develop in the faulty current. If RCD relays are used, local regulations must be observed. Relays must be suitable for protection of 3-phase equipment with a bridge rectifier and for a brief discharge on power-up using RCDs.

10.12 Leakage Current

Follow national and local codes regarding protective earthing of equipment where leakage current exceeds 3.5 mA.

Drive technology implies high frequency switching at high power. This generates a leakage current in the ground connection.

The ground leakage current is made up of several contributions and depends on various system configurations, including:

- RFI filtering.
- Motor cable length.
- Motor cable shielding.
- Drive power.

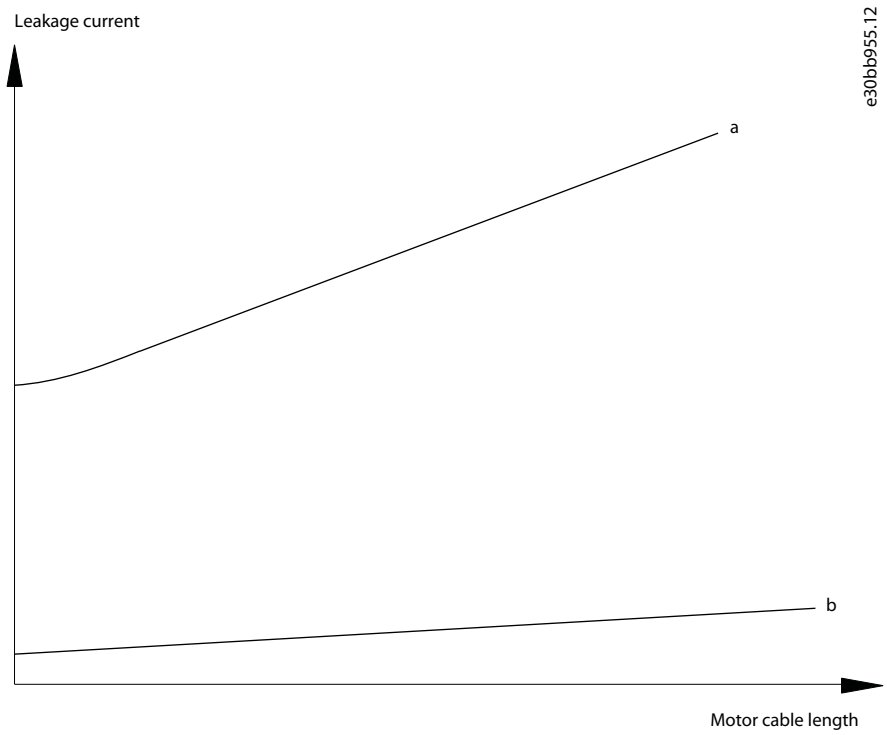

Illustration 131: Influence of the Cable Length and Power Size on Leakage Current

The leakage current also depends on the line distortion.

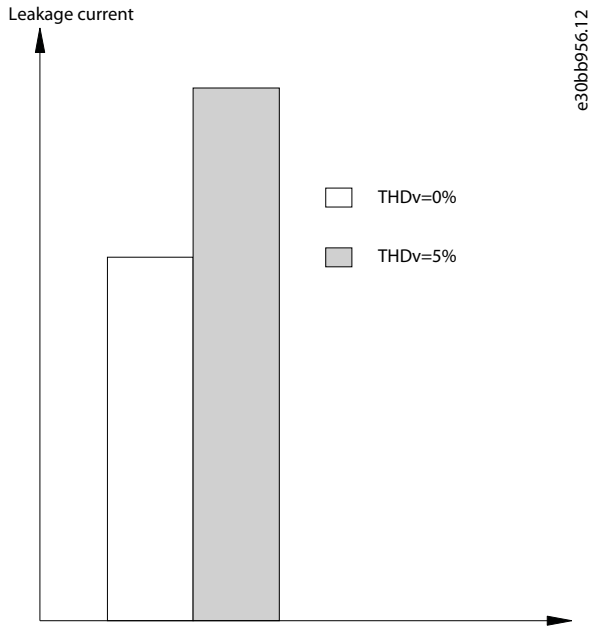

Illustration 132: Influence of Line Distortion on Leakage Current

If the leakage current exceeds 3.5 mA, compliance with EN/IEC 61800-5-1 (power drive system product standard) requires special care.

Reinforce grounding with the following protective earth connection requirements:

- Ground wire (terminal 95) of at least 10 mm^2 (8 AWG) cross-section.
- 2 separate ground wires both complying with the dimensioning rules.

See EN/IEC 61800-5-1 and EN 50178 for further information.

10.12.1 Using a Residual Current Device (RCD)

Where residual current devices (RCDs), also known as earth leakage circuit breakers (ELCBs), are used, comply with the following:

- Use RCDs of type B only, which are capable of detecting AC and DC currents.
- Use RCDs with an inrush delay to prevent faults caused by transient ground currents.
- Dimension RCDs according to the system configuration and environmental considerations.

The leakage current includes several frequencies originating from both the mains frequency and the switching frequency. Whether the switching frequency is detected depends on the type of RCD used.

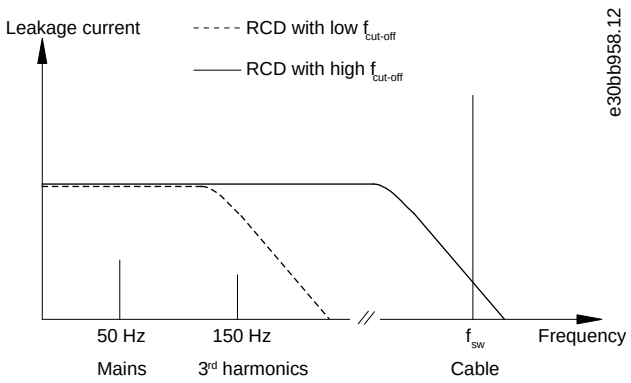

Illustration 133: Mains Contributions to Leakage Current

The amount of leakage current detected by the RCD depends on the cut-off frequency of the RCD.

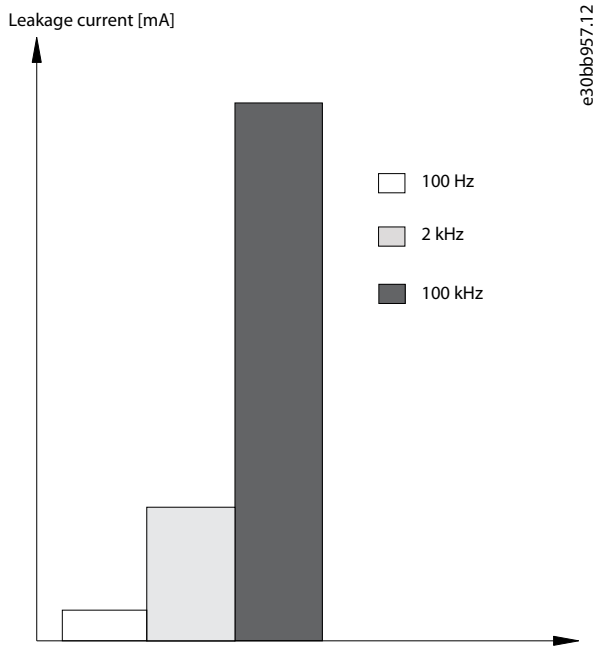

Illustration 134: Influence of Cut-off Frequency of the RCD on what is Responded to/Measured

For more details, refer to the RCD Application Note.

10.13 Efficiency

Efficiency of the drive (n)

The load on the drive has little effect on its efficiency. In general, the efficiency is the same at the rated motor frequency $f_{M,N,}$ even if the motor supplies 100% of the rated shaft torque or only 75%, for example if there are part loads. This also means that the efficiency of the drive does not change even if other U/f characteristics are selected. However, the U/f characteristics influence the efficiency of the motor. The efficiency declines a little when the switching frequency is set to a value of above 5 kHz. The efficiency is also slightly reduced if the mains voltage is 480 V, or if the motor cable is longer than 30 m (98 ft).

Drive efficiency calculation

Calculate the efficiency of the drive at different speeds and loads based on the graph in illustration 135. Multiply the factor in this graph by the specific efficiency factor listed in the specification tables in 8.3 Mains Supply:

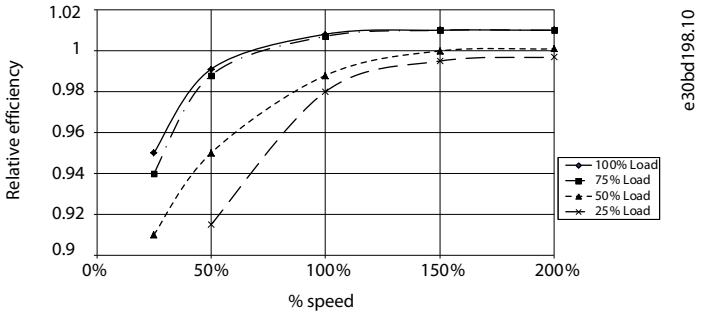

Illustration 135: Typical Efficiency Curves

Example: Assume a 160 kW, 380–480/500 V AC drive at 25% load at 50% speed. The graph shows 0.97 - the rated efficiency for a 160 kW drive is 0.98. The actual efficiency is then: 0.97x0.98=0.95.

The MyDrive® ecoSmart™ tool helps to calculate the efficiency, refer to www.ecosmart.danfoss.com.

Efficiency of the motor (η)

The efficiency of a motor connected to the drive depends on the magnetizing level. In general, the efficiency is as good as with mains operation. The efficiency of the motor depends on the type of motor. In the range of 75–100% of the rated torque, the efficiency of the motor is practically constant, both when the drive runs the motor and when it runs directly on mains. In small motors, the influence from the U/f characteristic on efficiency is marginal. However, in motors from 11 kW (15 hp) and up, the advantages are significant. Typically, the switching frequency does not affect the efficiency of small motors. Motors from 11 kW (15 hp) and up have their efficiency improved (1–2%) because the shape of the motor current sine-wave is almost perfect at high switching frequency.

Efficiency of the system (η)

To calculate the system efficiency, the efficiency of the drive (η_{VLT}) is multiplied by the efficiency of the motor (η_{MOTOR}):

$\eta_{SYSTEM} = \eta_{VLT} \times \eta_{MOTOR}$

10.14 Acoustic Noise and Airflow

Table 84: Acoustic Noise Ratings

Enclosure size	50% fan speed [dBA] (1)	Full fan speed [dBA] (1)
A1	51	60
A2	51	60
A3	51	60
A4	51	60
A5	54	63
B1	61	67
B2	58	70
B4	52	62
C1	52	62
C2	55	65

Enclosure size	50% fan speed [dBA] (1)	Full fan speed [dBA] (1)
C4	56	71
D3h (2)	58	71

[1] *Values are measured 1 m (3.28 ft) from the unit.*

[2] *Details, see separate design guide VLT® AutomationDrive FC 301/FC 302 90–710 kW*

Drives are equipped with fans, which contribute to the airflow in enclosures and surroundings.

Table 85: Air Flow Through the Drive

Enclosure size	IP protection rating	Size [mm (in)]	Air flow [m^3/hr]	Effect [W]
A2	20/21	70x70 (2.75x2.75)	30.6	3.6
A3	20/21	80x80 (3.15x3.15)	37/59	4.0
A4	55/66	70x70 (2.75x2.75)	23	2.9
A5	55/66	92x92 (3.6x3.6)	96	4.2
B1	21/55/66	127x127 (5x5)	310	18
B2	21/55/66	140x140 (5.5x5.5)	370	22
B3	20/21	120x120 (4.7x4.7)	244	12
B4	20/21	127x127 (5x5)	310	18
C1	21/55/66	172x150 (6.8x5.9)	420	22
C2	21/55/66	172x150 (6.8x5.9)	420	22
C3	20	120x120 (4.7x4.7)	244	12
C4	20	127x127 (5x5)	310	18

10.15 dU/dt Conditions

To avoid damage to motors without phase insulation paper or other insulation reinforcement designed for operation of the drive, install a VLT® dU/dt filter MCC 102 or a VLT® Sine-wave Filter MCC 101 on the output of the drive.

When a transistor in the inverter bridge switches, the voltage across the motor increases by a dU/dt ratio depending on:

- Motor inductance.
- Motor cable (type, cross-section, length, shielded, unshielded).

The natural induction causes an overshoot voltage peak in the motor voltage before it stabilizes. The level depends on the voltage in the DC link. Switching on the IGBTs causes peak voltage on the motor terminals. The rise time and the peak voltage affect the service life of the motor. If the peak voltage is too high, motors without phase coil insulation can be adversely affected over time.

With short motor cables (a few meters), the rise time and peak voltage are lower. The rise time and peak voltage increase with cable length.

The drive complies with IEC 60034-25 and IEC 60034-17 for motor design.

NOTICE

The measurements in the following tables are carried out with a single power size and motor, but with several motor cable lengths, are for information only. Depending on the combination of drive, motor cable type, motor cable length, and motor, the values for Upeak and dU/dt can be higher at the motor terminal. Sometimes, the values exceed the limits given by the motor manufacturer.

- To avoid problems with too high dU/dt, use motor cables longer than 30–40 m (98–131 ft).
- If in doubt, use a dU/dt filter between the drive and the motor, or do a measurement in the actual installation.

10.15.1 dU/dt Values, 200–240 V (T2)

10.15.1.1 dU/dt Values for P5K5T2, 200–240 V

Table 86: P5K5T2

Cable length [m (ft)]	Mains voltage [V]	Rise time [µs]	U_{peak} [kV]	dU/dt [kV/µs]
5 (16.4)	240	0.13	0.510	3.090
50 (164)	240	0.23	????	2.034
100 (328)	240	0.54	0.580	0.865
150(492)	240	0.66	0.560	0.674

10.15.1.2 dU/dt Values for P7K5T2, 200–240 V

Table 87: P7K5T2

Cable length [m (ft)]	Mains voltage [V]	Rise time [µs]	U_{peak} [kV]	dU/dt [kV/µs]
36 (118)	240	0.264	0.624	1.890
136 (446.2)	240	0.536	0.596	0.889
150 (492)	240	0.568	0.568	0.800

10.15.1.3 dU/dt Values for P11KT2, 200–240 V

Table 88: P11KT2

Cable length [m (ft)]	Mains voltage [V]	Rise time [µs]	U_{peak} [kV]	dU/dt [kV/µs]
30 (98.4)	240	0.556	0.650	0.935
100 (328)	240	0.592	0.594	0.802
150 (492)	240	0.708	0.587	0.663

10.15.1.4 dU/dt Values for P15KT2, 200–240 V

Table 89: P15KT2

Cable length [m (ft)]	Mains voltage [V]	Rise time [µs]	U_{peak} [kV]	dU/dt [kV/µs]
36 (118)	240	0.244	0.608	1.993
136 (446.2)	240	0.568	0.580	0.816
150 (492)	240	0.720	0.574	0.637

10.15.1.5 dU/dt Values for P18KT2, 200–240 V

Table 90: P18KT2

Cable length [m (ft)]	Mains voltage [V]	Rise time [µs]	U_{peak} [kV]	dU/dt [kV/µs]
36 (118)	240	0.244	0.608	1.993
136 (446.2)	240	0.568	0.580	0.816
150 (492)	240	0.720	0.574	0.637

10.15.1.6 dU/dt Values for P22KT2, 200–240 V

Table 91: P22KT2

Cable length [m (ft)]	Mains voltage [V]	Rise time [µs]	U_{peak} [kV]	dU/dt [kV/µs]
15 (49.2)	240	0.194	0.626	2.581
50 (164)	240	0.252	0.574	1.822
150 (492)	240	0.488	0.538	0.882

10.15.1.7 dU/dt Values for P30KT2, 200–240 V

Table 92: P30KT2

Cable length [m (ft)]	Mains voltage [V]	Rise time [µs]	U_{peak} [kV]	dU/dt [kV/µs]
30 (98.4)	240	0.300	0.598	1.594
100 (328)	240	0.536	0.566	0.844
150 (492)	240	0.776	0.546	0.562

10.15.1.8 dU/dt Values for P37KT2, 200–240 V

Table 93: P37KT2

Cable length [m (ft)]	Mains voltage [V]	Rise time [µs]	U_{peak} [kV]	dU/dt [kV/µs]
30 (98.4)	240	0.300	0.598	1.594

Cable length [m (ft)]	Mains voltage [V]	Rise time [µs]	U_{peak} [kV]	dU/dt [kV/µs]
100 (328)	240	0.536	0.566	0.844
150 (492)	240	0.776	0.546	0.562

10.15.2 dU/dt Values, 380–480 V (T4)

10.15.2.1 dU/dt Values for P1K5T4, 380–480 V

Table 94: P1K5T4

Cable length [m (ft)]	Mains voltage [V]	Rise time [µs]	U_{peak} [kV]	dU/dt [kV/µs]
5 (16.4)	480	0.640	0.690	0.862
50 (164)	480	0.470	0.985	0.985
150 (492)	480	0.760	1.045	0.947

10.15.2.2 dU/dt Values for P4K0T4, 380–480 V

Table 95: P4K0T4

Cable length [m (ft)]	Mains voltage [V]	Rise time [µs]	U_{peak} [kV]	dU/dt [kV/µs]
5 (16.4)	480	0.172	0.890	4.156
50 (164)	480	0.310	????	2.564
150 (492)	480	0.370	1.190	1.770

10.15.2.3 dU/dt Values for P7K5T4, 380–480 V

Table 96: P7K5T4

Cable length [m (ft)]	Mains voltage [V]	Rise time [µs]	U_{peak} [kV]	dU/dt [kV/µs]
5 (16.4)	480	0.4755	0.739	8.035
50 (164)	480	0.207	????	4.548
150 (492)	480	0.6742	1.030	2.828

10.15.2.4 dU/dt Values for P11KT4, 380–480 V

Table 97: P11KT4

Cable length [m (ft)]	Mains voltage [V]	Rise time [µs]	U_{peak} [kV]	dU/dt [kV/µs]
36 (118)	480	0.396	1.210	2.444

Cable length [m (ft)]	Mains voltage [V]	Rise time [µs]	U_{peak} [kV]	dU/dt [kV/µs]
100 (328)	480	0.844	1.230	1.165
150 (492)	480	0.696	1.160	1.333

10.15.2.5 dU/dt Values for P15KT4, 380–400 V

Table 98: P15KT4

Cable length [m (ft)]	Mains voltage [V]	Rise time [µs]	U_{peak} [kV]	dU/dt [kV/µs]
36 (118)	480	0.396	1.210	2.444
100 (328)	480	0.844	1.230	1.165
150 (492)	480	0.696	1.160	1.333

10.15.2.6 dU/dt Values for P18KT4, 380–480 V

Table 99: P18KT4

Cable length [m (ft)]	Mains voltage [V]	Rise time [µs]	U_{peak} [kV]	dU/dt [kV/µs]
36 (118)	480	0.312	????	2.846
100 (328)	480	0.556	1.250	1.798
150 (492)	480	0.608	1.230	1.618

10.15.2.7 dU/dt Values for P22KT4, 380–480 V

Table 100: P22KT4

Cable length [m (ft)]	Mains voltage [V]	Rise time [µs]	U_{peak} [kV]	dU/dt [kV/µs]
15 (49.2)	480	0.288	????	3.083
100 (328)	480	0.492	1.230	2.000
150 (492)	480	0.468	1.190	2.034

10.15.2.8 dU/dt Values for P30KT4, 380–480 V

Table 101: P30KT4

Cable length [m (ft)]	Mains voltage [V]	Rise time [µs]	U_{peak} [kV]	dU/dt [kV/µs]
5 (16.4)	480	0.368	1.270	2.853
50 (164)	480	0.536	1.260	1.978
100 (328)	480	0.680	1.240	1.426
150 (492)	480	0.712	1.200	1.334

10.15.2.9 dU/dt Value for P37KT4, 380–480 V

Table 102: P37KT4

Cable length [m (ft)]	Mains voltage [V]	Rise time [µs]	U_{peak} [kV]	dU/dt [kV/µs]
5 (16.4)	480	0.368	1.270	2.853
50 (164)	480	0.536	1.260	1.978
100 (328)	480	0.680	1.240	1.426
150 (492)	480	0.712	1.200	1.334

10.15.2.10 dU/dt Values for P45KT4, 380–480 V

Table 103: P45KT4

Cable length [m (ft)]	Mains voltage [V]	Rise time [µs]	U_{peak} [kV]	dU/dt [kV/µs]
15 (49.2)	480	0.256	1.230	3.847
50 (164)	480	0.328	1.200	2.957
100 (328)	480	0.456	1.200	2.127
150 (492)	480	0.960	1.150	1.052

10.15.3 dU/dt Values, 380–500 V (T5)

10.15.3.1 dU/dt Values for P55KT5, 380–500 V

Table 104: P55KT5

Cable length [m (ft)]	Mains voltage [V]	Rise time [µs]	U_{peak} [kV]	dU/dt [kV/µs]
5 (16.4)	480	0.371	1.170	2.523

10.15.3.2 dU/dt Values for P75KT5, 380–500 V

Table 105: P75KT5

Cable length [m (ft)]	Mains voltage [V]	Rise time [µs]	U_{peak} [kV]	dU/dt [kV/µs]
5 (16.4)	480	0.371	1.170	2.523

10.15.4 dU/dt Values, 600 V (T6)

10.15.4.1 dU/dt Values for P15KT6, 600 V

Table 106: P15KT6

Cable length [m (ft)]	Mains voltage [V]	Rise time [µs]	U_{peak} [kV]	dU/dt [kV/µs]
36 (118)	600	0.304	1.560	4.105
50 (164)	600	0.300	1.550	4.133
100 (328)	600	0.536	1.640	2.448
150 (492)	600	0.576	1.640	2.278

10.15.4.2 dU/dt Values for P30KT6, 600 V

Table 107: P30KT6

Cable length [m (ft)]	Mains voltage [V]	Rise time [µs]	U_{peak} [kV]	dU/dt [kV/µs]
36 (118)	600	0.084	1.560	7.962
50 (164)	600	0.120	1.540	5.487
100 (328)	600	0.165	1.472	3.976
150 (492)	600	0.190	1.530	3.432

10.15.4.3 dU/dt Values for P75KT6, 600 V

Table 108: P75KT6

Cable length [m (ft)]	Mains voltage [V]	Rise time [µs]	U_{peak} [kV]	dU/dt [kV/µs]
15 (49.2)	600	0.276	1.184	4.290

10.15.5 dU/dt Values, 525–690 V (T7)

10.15.5.1 dU/dt Values for P7K5T7, 525–690 V

Table 109: P7K5T7

Cable length [m (ft)]	Mains voltage [V]	Rise time [µs]	U_{peak} [kV]	dU/dt [kV/µs]
80 (262.5)	690	0.58	1.728	2.369
130 (426.5)	690	0.93	1.824	1.569
180 (590.6)	690	0.925	1.818	1.570

10.15.5.2 dU/dt Values for P45KT7, 525–690 V

Table 110: P45KT7

Cable length [m (ft)]	Mains voltage [V]	Rise time [µs]	U_{peak} [kV]	dU/dt [kV/µs]
6 (19.7)	690	0.238	1.416	4.739
50 (164)	690	0.358	1.764	3.922
150 (492)	690	0.465	1.872	3.252

10.16 Electromagnetic Compatibility (EMC) Overview

10.16.1 EMC Test Results

The following test results have been obtained by using a system with a drive, a shielded control cable, a control box with potentiometer, a single motor, and shielded motor cable (Ölflex Classic 100 CY) at nominal switching frequency. See table 111 for the maximum motor cable lengths for compliance.

NOTICE

Conditions may change significantly for other set-ups.

NOTICE

- Consult illustration 129 for parallel motor cables.

Table 111: EMC Test Results (Emission) Maximum Motor Cable Length

RFI filter type		Conducted emission			Radiated emission		
		Cable length [m (ft)]			Cable length [m (ft)]		
Standards and requirements	EN 55011/CISPR 11	Class B	Class A, Group 1	Class A, Group 2	Class B	Class A, Group 1	Class A, Group 2
	EN/IEC 61800-3	Category C1	Category C2	Category C3	Category C1	Category C2	Category C3
H1							
FC 301	0–37 kW, 200–240 V	10 (32.8)	50 (164)	50 (164)	No	Yes	Yes
	0–75 kW, 380–480 V	10 (32.8)	50 (164)	50 (164)	No	Yes	Yes
FC 302	0–37 kW, 200–240 V	50 (164)	150 (492)	150 (492)	No	Yes	Yes
	0–75 kW, 380–480 V	50 (164)	150 (492)	150 (492)	No	Yes	Yes
H2/H5							
FC 301	0–3.7 kW, 200–240 V	No	No	5 (16.4)	No	No	Yes

RFI filter type		Conducted emission			Radiated emission		
FC 302	5.5–37 kW, 200–240 V [1]	No	No	25 (82)	No	No	Yes
	0–7.5 kW, 380–500 V	No	No	5 (16.4))	No	No	Yes
	11–75 kW, 380–500 V [1]	No	No	25 (82)	No	No	Yes
	11–22 kW, 525–690 V [1]	No	No	25 (82)	No	No	Yes
	30–75 kW, 525–690 V [1]	No	No	25 (82)	No	No	Yes
H3							
FC 301	0–1.5 kW, 200–240 V	2.5 (8.2)	25 (82)	25 (82)	No	Yes	Yes
	0–1.5 kW, 380–480 V	2.5 (8.2)	25 (82)	25 (82)	No	Yes	Yes
H4							
FC 302	1.1–7.5 kW, 525–690 V	No	100 (328)	100 (328)	No	Yes	Yes
	11–22 kW, 525–690 V	No	100 (328)	100 (328)	No	Yes	Yes
	11–37 kW, 525–690 V [2]	No	150 (492)	150 (492)	No	Yes	Yes
	30–75 kW, 525–690 V	No	150 (492)	150 (492)	No	Yes	Yes
Hx [3]							
FC 302	0.75–75 kW, 525–600 V	No	No	No	No	No	No

[1] *T5, 22–45 kW and T7, 22–75 kW comply with class A group 1 with 25 m (82 ft) motor cable. Some restrictions for the installation apply (contact Danfoss for details). Hx, H1, H2; H3; H4, or H5 is defined in the type code positions 16–17 for EMC filters.*

[2] *IP20.*

[3] *Hx versions can be used according to EN/IEC 61800-3 category C4.*

10.16.2 Emission Requirements

According to the EMC product standard for AC drives, EN/IEC 61800-3:2004, the EMC requirements depend on the intended use of the drive. Four categories are defined in the EMC product standard. The definitions of the 4 categories together with the requirements for mains supply voltage conducted emissions are given in table 112.

Table 112: Emission Requirements

Category	Definition	Conducted emission requirement according to the limits given in EN 55011
C1	Drives installed in the 1st environment (home and office) with a supply voltage less than 1000 V.	Class B

Category	Definition	Conducted emission requirement according to the limits given in EN 55011
C2	Drives installed in the 1st environment (home and office) with a supply voltage less than 1000 V, which are neither plug-in nor movable and are intended for installation and commissioning by a professional.	Class A Group 1
C3	Drives installed in the 2nd environment (industrial) with a supply voltage lower than 1000 V.	Class A Group 2
C4	Drives installed in the 2nd environment (industrial) with a supply voltage equal to or above 1000 V or rated current equal to or above 400 A or intended for use in complex systems.	No limit line. Make an EMC plan.

When the generic emission standards are used, the drives are required to comply with the limits in table 113.

Table 113: Emission Limit Classes

Environment	Generic standard	Conducted emission requirement according to the limits given in EN 55011
1st environment (home and office)	EN/IEC 61000-6-3 Emission standard for residential, commercial, and light industrial environments.	Class B
2nd environment (industrial environment)	EN/IEC 61000-6-4 Emission standard for industrial environments.	Class A Group 1

NOTICE

According to the EMC Directive, a system is defined as a combination of several types of equipment, finished products, and/or components combined, designed and/or put together by the same person (system manufacturer) intended to be placed on the market for distribution as a single functional unit for an end user and intended to be installed and operated together to perform a specific task. The EMC directive applies to products/systems and installations, but in case the installation is built up of CE marked products/systems the installation can also be considered compliant with the EMC directive. Installations shall not be CE marked.

According to the EMC Directive, Danfoss Drives as a manufacturer of product/systems is responsible for obtaining the essential requirements of the EMC directive and attaching the CE mark. For systems involving load sharing and other DC terminals, Danfoss Drives can only ensure compliance to EMC Directive when end users connect combinations of Danfoss Drives products as described in our technical documentation.

If any third-party products are connected to the load share or other DC terminals on the AC drives, Danfoss Drives cannot guarantee that the EMC requirements are fulfilled.

10.16.3 Immunity Requirements

The immunity requirements for drives depend on the environment in which they are installed. The requirements for the industrial environment are higher than the requirements for the home and office environment. All Danfoss VLT® drives comply with the requirements for the industrial environment and therefore also comply with the lower requirements for home and office environment with a large safety margin.

To document immunity against burst transient from electrical phenomena, the following immunity tests have been carried out on a system consisting of:

- A drive (with options if relevant).
- A shielded control cable.
- A control box with potentiometer, motor cable, and motor.

The tests were performed in accordance with the following basic standards:

- **EN 61000-4-2 (IEC 61000-4-2) Electrostatic discharges (ESD):** Simulation of electrostatic discharges from human beings.
- **EN 61000-4-3 (IEC 61000-4-3) Radiated immunity:** Amplitude modulated simulation of the effects of radar and radio communication equipment and mobile communications equipment.
- **EN 61000-4-4 (IEC 61000-4-4) Burst transients:** Simulation of interference brought about by switching a contactor, relay, or similar devices.
- **EN 61000-4-5 (IEC 61000-4-5) Surge transients:** Simulation of transients brought about by, for example, lightning that strikes near installations.
- **EN 61000-4-6 (IEC 61000-4-6) RF Common mode:** Simulation of the effect from radio-transmission equipment joined by connection cables.

The immunity requirements should follow product standard IEC 61800-3. See table 114.

Table 114: EMC Immunity, Voltage range: 200–240 V, 380–480 V

Basic standard	Burst IEC 61000-4-4	Surge IEC 61000-4-5	ESD IEC 61000-4-2	Radiated electro-magnetic field IEC 61000-4-3	RF common mode voltage IEC 61000-4-6
Acceptance criterion	**B**	**B**	**B**	**A**	**A**
Line	4 kV CM	2 kV/2 Ω DM 4 kV/12 Ω CM	–	–	10 V_{RMS}
Motor	4 kV CM	4 kV/2 Ω [1]	–	–	10 V_{RMS}
Brake	4 kV CM	4 kV/2 Ω [1]	–	–	10 V_{RMS}
Load sharing	4 kV CM	4 kV/2 Ω [1]	–	–	10 V_{RMS}
Control wires	2 kV CM	2 kV/2 Ω [1]	–	–	10 V_{RMS}
Standard bus	2 kV CM	2 kV/2 Ω [1]	–	–	10 V_{RMS}
Relay wires	2 kV CM	2 kV/2 Ω [1]	–	–	10 V_{RMS}
Application and Fieldbus options	2 kV CM	2 kV/2 Ω [1]	–	–	10 V_{RMS}
LCP cable	2 kV CM	2 kV/2 Ω [1]	–	–	10 V_{RMS}
External 24 V DC	2 kV CM	0.5 kV/2 Ω DM 1 kV/12 Ω CM	–	–	10 V_{RMS}
Enclosure	–	–	8 kV AD 6 kV CD	10 V/m	–

[1] *Injection on cable shield.*

AD: Air Discharge

CD: Contact Discharge

CM: Common Mode

DM: Differential Mode

10.16.4 EMC Compatibility

NOTICE

OPERATOR RESPONSIBILITY

According to the EN 61800-3 standard for variable-speed drive systems, the operator is responsible for ensuring EMC compliance. Manufacturers can offer solutions for operation conforming to the standard. Operators are responsible for applying these solutions and for paying the associated costs.

There are 2 options for ensuring electromagnetic compatibility:

- Eliminate or minimize interference at the source of emitted interference.
- Increase the immunity to interference in devices affected by its reception.

RFI filters

The goal is to obtain systems that operate stably without radio frequency interference between components. To achieve a high level of immunity, use drives with high-quality RFI filters.

NOTICE

In a residential environment, this product can cause radio interference, in which case supplementary mitigation measures may be required.

PELV and galvanic isolation compliance

All control and relay terminals comply with PELV (excluding grounded Delta leg above 400 V). To obtain galvanic (ensured) isolation, fulfill requirements for higher isolation and provide the relevant creepage/clearance distances. These requirements are described in EN 61800-5.1.

Electrical isolation is provided as shown in illustration 136. The components described comply with both PELV and the galvanic isolation requirements.

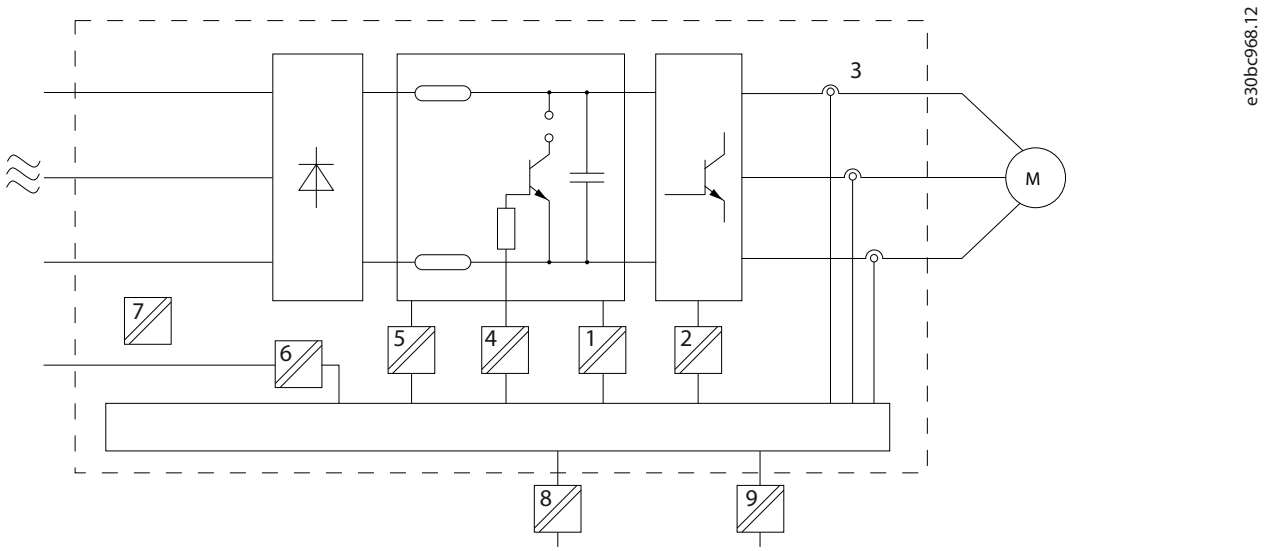

1	Power supply (SMPS) including signal isolation of DC link	**2**	Gate drive for the IGBTs
3	Current transducers	**4**	Opto-coupler, brake module (optional)
5	Internal inrush, RFI, and temperature measurement circuits	**6**	Custom relays
7	Mechanical brake	**8**	Functional galvanic isolation for the 24 V back-up option and for the RS485 standard bus interface.
9	Functional galvanic isolation for the 24 V back-up option and for the RS485 standard bus interface.		

Illustration 136: Galvanic Isolation

10.17 EMC-compliant Installation

To obtain an EMC-compliant installation, be sure to follow all electrical installation instructions.

Also, remember to practice the following:

- When using relays, control cables, a signal interface, fieldbus, or brake, connect the shield to the enclosure at both ends. If the ground path has high impedance, is noisy, or is carrying current, break the shield connection on 1 end to avoid ground current loops.
- Convey the currents back to the unit using a metal mounting plate. Ensure good electrical contact from the mounting plate by securely fastening the mounting screws to the drive chassis.
- Use shielded cables for motor output cables. An alternative is unshielded motor cables within metal conduit.
- Ensure that motor and brake cables are as short as possible to reduce the interference level from the entire system.
- Avoid placing cables with a sensitive signal level alongside motor and brake cables.
- For communication and command/control lines, follow the particular communication protocol standards. For example, USB must use shielded cables, but RS485/ethernet can use shielded UTP or unshielded UTP cables.
- Ensure that all control terminal connections are rated protective extra low voltage (PELV).

NOTICE

TWISTED SHIELD ENDS (PIGTAILS)

Twisted shield ends increase the shield impedance at higher frequencies, which reduces the shield effect and increases the leakage current.

- Use integrated shield clamps instead of twisted shield ends.

NOTICE

SHIELDED CABLES

If shielded cables or metal conduits are not used, the unit and the installation do not meet regulatory limits on radio frequency (RF) emission levels.

NOTICE

EMC INTERFERENCE

Failure to isolate power, motor, and control cables can result in unintended behavior or reduced performance.

- Use shielded cables for motor and control wiring.
- Provide a minimum 200 mm (7.9 in) separation between mains input, motor cables, and control cables.

NOTICE

INSTALLATION AT HIGH ALTITUDE

There is a risk for overvoltage. Isolation between components and critical parts could be insufficient and may not comply with PELV requirements.

- Use external protective devices or galvanic isolation. For installations above 2000 m (6500 ft) altitude, contact Danfoss regarding protective extra low voltage (PELV) compliance.

NOTICE

PROTECTIVE EXTRA LOW VOLTAGE (PELV) COMPLIANCE

Prevent electric shock by using PELV electrical supply and complying with local and national PELV regulations.

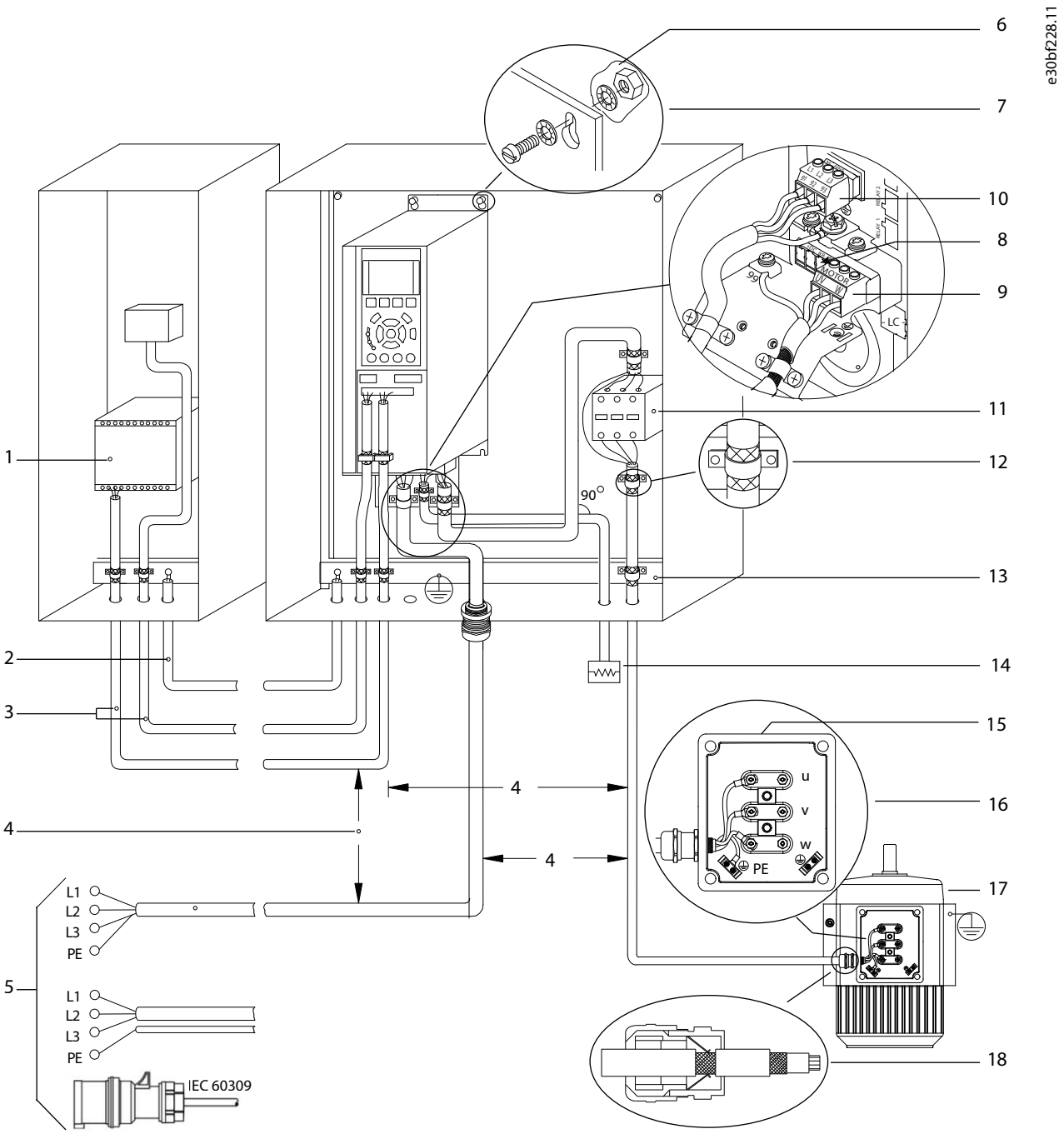

1	Programmable logic controller (PLC)	**2**	Minimum 16 mm^2 (6 AWG) equalizing cable
3	Control cables	**4**	Minimum 200 mm (7.9 in) between control cables, motor cables, and mains cables
5	Mains supply options, see IEC/EN 61800-5-1	**6**	Bare (unpainted) surface
7	Star washers	**8**	Brake cable (shielded) – not shown, but same gounding principle applies as for motor cable
9	Motor cable (shielded)		

11	Output contactor, and so on.	**10**	Mains cable (unshielded)
13	Common ground busbar. Follow local and national requirements for cabinet grounding.	**12**	Cable insulation stripped
15	Terminal box	**14**	Brake resistor
17	Motor	**16**	Connection to motor
		18	EMC cable gland

Illustration 137: Example of Proper EMC Installation

NOTICE

EMC INTERFERENCE

Use shielded cables for motor and control wiring, and separate cables for input power, motor wiring, and control wiring. Failure to isolate power, motor, and control cables can result in unintended behavior or reduced performance. Minimum 200 mm (7.9 in) clearance is required between power, motor, and control cables.

10.18 Harmonics Overview

Non-linear loads, such as found in drives, do not draw current uniformly from the power line. This non-sinusoidal current has components which are multiples of the basic current frequency. These components are referred to as harmonics. It is important to control the total harmonic distortion on the mains supply. Although the harmonic currents do not directly affect electrical energy consumption, they generate heat in the wiring and transformers that can affect other devices on the same power line.

10.18.1 Harmonics Analysis

Since harmonics increase heat losses, it is important to consider harmonics when designing systems to prevent overloading the transformer, the inductors, and the wiring. When necessary, perform an analysis of the system harmonics to determine equipment effects.

A non-sinusoidal current is transformed with a Fourier series analysis into sine-ware currents at different frequencies, that is, different harmonic currents I_N with 50 Hz or 60 Hz as the basic frequency.

Table 115: Harmonics-related Abbreviations

Abbreviation	Description
f_1	Basic frequency (50 Hz or 60 Hz)
I_1	Current at the basic frequency
U_1	Voltage at the basic frequency
I_n	Current at the nth harmonic frequency
U_n	Voltage at the nth harmonic frequency
n	Harmonic order

Table 116: Basic Currents and Harmonic Currents

	Basic current ($I_{1)}$)	Harmonic current ($I_{n)}$)		
Current	I_1	I_5	I_7	I_{11}
Frequency [Hz]	50	250	350	550

Table 117: Harmonic Currents versus RMS Input Current

Current	Harmonic current				
	I_{RMS}	I_1	I_5	I_7	I_{11-49}
Input current	1.0	0.9	0.5	0.2	<0.1

The voltage distortion on the mains supply voltage depends on the size of the harmonic currents multiplied by the mains impedance for the frequency in question. The total voltage distortion (THDi) is calculated based on the individual voltage harmonics using this formula:

$$\text{THDi} = \frac{\sqrt{I_5^2 + I_7^2 + ...I_n^2}}{I}$$

10.18.2 Effect of Harmonics in a Power Distribution System

In illustration 138, a transformer is connected on the primary side to a point of common coupling PCC1 on the medium voltage supply. The transformer has an impedance Z_{xfr} and feeds several loads. The point of common coupling where all loads are connected together is PCC2. Each load is connected through cables that have an impedance Z_1, Z_2, Z_3.

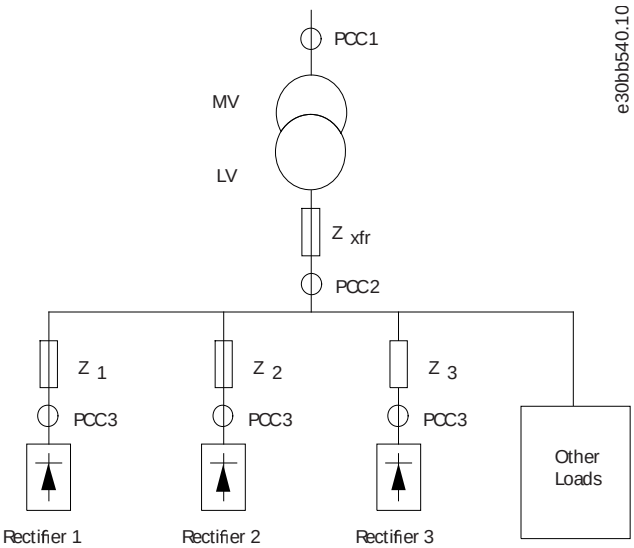

Illustration 138: Small Distribution System

Harmonic currents drawn by non-linear loads cause distortion of the voltage because of the voltage drop on the impedances of the distribution system. Higher impedances result in higher levels of voltage distortion.

Current distortion relates to apparatus performance and it relates to the individual load. Voltage distortion relates to system performance. It is not possible to determine the voltage distortion in the PCC knowing only the load's harmonic performance. To predict the distortion in the PCC, the configuration of the distribution system and relevant impedances must be known.

A commonly used term for describing the impedance of a grid is the short circuit ratio R_{sce}. R_{sce} is defined as the ratio between the short circuit apparent power of the supply at the PCC (S_{sc}) and the rated apparent power of the load (S_{equ}).

$$R_{sce} = \frac{S_{ce}}{S_{equ}}$$

where

$$S_{sc} = \frac{U^2}{Z_{supply}} \text{ and } S_{equ} = U * I_{equ}$$

The negative effect of harmonics is twofold

- Harmonic currents contribute to system losses (in cabling, transformer).
- Harmonic voltage distortion causes disturbance to other loads and increase losses in other loads.

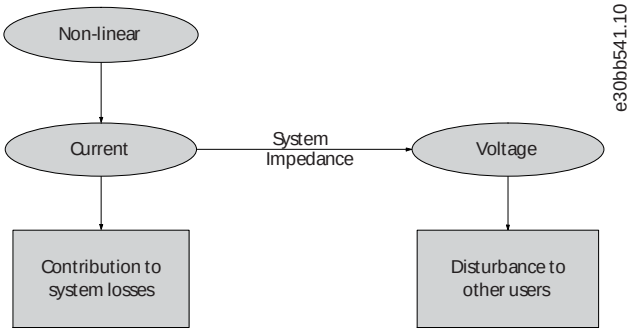

Illustration 139: Negative Effects of Harmonics

10.18.3 IEC Harmonic Standards

In most of Europe, the basis for the objective assessment of the quality of mains power is the Electromagnetic Compatibility fo Devices Act (EMVG). Compliance with these regulations ensures that all devices and networks connected to electrical distribution systems fulfill their intended purpose without generating problems.

Table 118: EN Design Standards for Mains Power Quality

Standard	Definition
EN 61000-2-2, EN 61000-2-4, EN 50160	Define the mains voltage limits required for public and industrial power grids.
EN 61000-3-2, 61000-3-12	Regulate mains interference generated by connected devices in lower current products.
EN 50178	Monitors electronic equipment for use in power installations.

There are 2 European standards that address harmonics in the frequency range from 0 Hz to 9 kHz:

- EN 61000-2-2 Compatibility Levels for Low-Frequency Conducted Disturbances and Signaling in Public Low-Voltage Power Supply Systems.
- EN 61000-2-4 Compatibility Levels for Low-Frequency Conducted Disturbances and Signaling in Industrial Plants.

The EN 61000-2-2 standard states the requirements for compatibility levels for PCC (point of common coupling) of low voltage AC systems on a public supply network. Limits are specified only for harmonic voltage and total harmonic distortion of the voltage. EN 61000-2-2 does not define limits for harmonic currents. In situations where the total harmonic distortion THDv=8%, PCC limits are identical to those limits specified in the EN 61000-2-4 Class 2.

The EN 61000-2-4 standard states the requirements for compatibility levels in industrial and private networks. The standard further defines the following 3 classes of electromagnetic environments:

- Class 1 relates to compatibility levels that are less than the public supply network, which affects equipment sensitive to disturbances (lab equipment, some automation equipment, and certain protection devices).
- Class 2 relates to compatibility levels that are equal to the public supply network. The class applies to PCCs on the public supply network and to IPCs (internal points of coupling) on industrial or other private supply networks. Any equipment designed for operation on a public supply network allowed in this class.
- Class 3 relates to compatibility levels greater than the public supply network. This class applies only to IPCs in industrial environments. Use this class where the following equipment is found:
  - Large drives.
  - Welding machines.
  - Large motors starting frequently.
  - Loads that change quickly.

Typically, a class cannot be defined ahead of time without considering the intended equipment and processes to be used in the environment.

Table 119: Compatibility Levels for Harmonics

Harmonic order (h)	Class 1 (V_h%)	Class 2 (V_h%)	Class 3 (V_h%)
5	3	6	8
7	3	5	7
11	3	3.5	5
13	3	3	4.5
17	2	2	4
17<h≤49	2.27 x (17/h) - 0.27	2.27 x (17/h) - 0.27	4.5 x (17/h) - 0.5

Table 120: Compatibility Levels for the Total Harmonic Voltage Distortion THDv

	Class 1	Class 2	Class 3
THDv	5%	8%	10%

10.18.4 Harmonic Results (Emission)

Power sizes from P1K1 (1.1 kW) up to P18K (18.5 kW) in T2 (200–240 V) and up to P90K (90 kW) in T4 (380–480 V) fulfill the limits within IEC/EN 61000-3-12:2011, table 4.

Power sizes P110-P450 (110 kW–450 kW) in T4 (380–480 V) also comply with IEC/EN 61000-3-12:2011 even though not required because currents are above 75 A. Typical harmonic line current emission values for R_{SCE} above 120 are shown in table 121 for power sizes below 90 kW and in table 122 for power sizes above 90 kW.

Table 121: Typical Harmonic Emission Values for VLT® Drives FC 102, FC 103, FC 202, FC 302 below 90 kW

	Individual harmonic current Ih/Iref (%)			
	I5	**I7**	**I11**	**I13**
Typical value	38	20	10	8
Limit for $R_{SCE} \geq 120$ [1]	40	25	15	10
	Harmonic current distortion factor (%)			
	THC/Iref		**PWHC/Iref**	
Typical value [2]	42		41	
Limit for $R_{SCE} \geq 120$ [1]	48		46	

[1] *According to IEC 61000-3-12:2011*

[2] *The value depends on voltage range, power size and other factors. Please contact Danfoss to get information on specific values.*

Table 122: Typical Harmonic Emission Values for VLT® Drives FC 102, FC 103, FC 202, FC 302 above 90 kW

	Individual harmonic current Ih/Iref (%)			
	I5	**I7**	**I11**	**I13**
Typical value	38	20	10	8
Limit for $R_{SCE} \geq 120$ [1]	(no limit applies because currents are above 75A)			
	Harmonic current distortion factor (%)			
	THC/Iref		**PWHC/Iref**	
Typical value [2]	40		39	
Limit for $R_{SCE} \geq 120$ [1]	(no limit applies because currents are above 75A)			

[1] *According to IEC 61000-3-12:2011*

[2] *The value depends on voltage range, power size and other factors. Please contact Danfoss to get information on specific values.*

NOTICE

It is the responsibility of the installer or user of the equipment to ensure that the equipment is connected only to a supply with a short-circuit power S_{SC} which is greater than or equal to what is specified below at the interface point between the users supply and the public system (R_{SCE}). If necessary, consult the distribution network operator.

$$S_{SC} = \sqrt{3} \times R_{SCE} \times U_{mains} \times I_{equ} = \sqrt{3} \times 120 \times 400 \times I_{equ}$$

Other power sizes can be connected to the public supply network by consultation with the distribution network operator.

10.18.5 Harmonic Mitigation

In cases where extra harmonic suppression is required, Danfoss offers a wide range of mitigation equipment. These are:

- VLT® 12-pulse drives.
- VLT® AHF filters.
- VLT® Low Harmonic Drives.
- VLT® Active Filters.

The choice of the right solution depends on several factors:

- The grid (background distortion, mains unbalance, resonance, and type of supply (transformer/generator)).
- Application (load profile, number of loads, and load size).
- Local/national requirements/regulations (IEEE 519, IEC, G5/4, and so on).
- Total cost of ownership (initial cost, efficiency, maintenance, and so on).

10.18.6 Harmonic Calculation

To determine the degree of voltage pollution on the grid and needed precaution, use the Danfoss MCT31 calculation software. The free tool VLT® Harmonic Calculation MCT 31 can be downloaded from www.danfoss.com. The software is built with a focus on user-friendliness and limited to involve only system parameters that are normally accessible.

Also available is the online software tool Danfoss HCS, which can be found at www.danfoss-hcs.com.

10.18.7 Line Reactors

A line reactor is an inductor which is wired in series between a power source and a load. Line reactors, also called input AC reactors, are used in motor drive applications.

The main function of the line reactor is to limit the current. Line reactors also reduce the main harmonics, limit the inrush currents, and protect drives and motors. Line reactors help achieving an overall improvement of the true power factor and the quality of the input current waveform.

Line reactors are classified by their percent impedance (denoted as percent IZ or %IZ), which is the voltage drop due to impedance at the rated current expressed as a percent of rated voltage. The most common line reactors have either 3% or 5% impedance.

When to use line reactors

It is important to consider where to install the drives. In some situations, disturbances from the grid can damage the drive and precautions must be taken to avoid this. To prevent disturbances, ensure that there is only a minimum of impedance in front of the drive. Refer to 10.18.5 Harmonic Mitigation for advice on mitigation.

When calculating the impedance, also include the contribution from the supply transformer and the supply cables. In the following situations, add impedance (line reactor or transformer) in front of the drive:

- The installation site has switched power factor correction capacitors.
- The installation site has lightning strikes or voltage spikes.
- The installation site has power interruptions or voltage dips.
- The transformer is too large compared to the drive.

Also, when planning load sharing applications, pay special attention to different enclosure size combinations and inrush concepts. For technical advice on load sharing applications, contact Danfoss application support.

Danfoss offers the line reactor series VLT® Line Reactor MCC 103. For more information, go to www.danfoss.com.

11 Basic Operating Principles

11.1 Introduction

This chapter provides an overview of the primary assemblies and circuitry of a Danfoss VLT® drive. It describes the internal electrical and signal processing functions. A description of the internal control structure is also included.

11.2 Drive Controls

A drive is an electronic controller that supplies a regulated amount of AC power to a 3-phase inductive motor. By supplying variable frequency and voltage to the motor, the drive varies the motor speed or maintains a constant speed as the load on the motor changes. Also, the drive can stop and start a motor without the mechanical stress associated with a line start.

In its basic form, the drive can be divided into 4 main areas:

- A rectifier consisting of SCRs or diodes that convert 3-phase AC voltage to pulsating DC voltage.
- A DC link consisting of inductors and their capacitor banks that stabilize the pulsating DC voltage.
- An inverter using IGBTs to convert the DC voltage to variable voltage and variable frequency AC.
- A control area consisting of software that runs the hardware to produce the variable voltage that controls and regulates the AC motor.

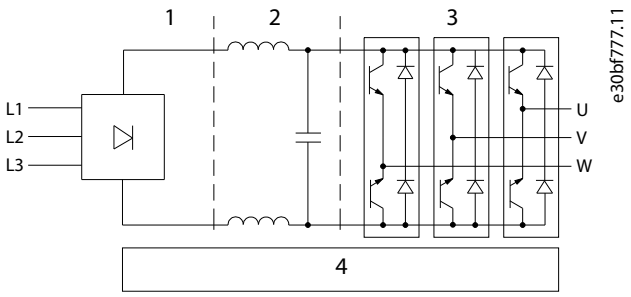

1	Rectifier (SCR/diodes)	**2**	DC link (DC bus)
3	Inverter (IGBTs)	**4**	Control area

Illustration 140: Internal Processing

11.2.1 Control Principle

The control structure is a software process that controls the motor based on user-defined references, for example RPM, and whether feedback is used or not (closed loop/open loop). The operator defines the control by selecting the configuration mode.

The control structures are as follows:

- Open-loop control structure:
  - Speed (RPM).
  - Torque (Nm).
- Closed-loop control structure:
  - Speed (RPM).
  - Torque (Nm).
  - Process (user-defined units, for example, ft, lpm, psi, %, and bar).

User inputs/references

The drive uses an input source (also called reference) to control and regulate the motor. The drive receives this input either:

- Manually via the LCP. This method is referred to as local (hand on).
- Remotely via analog/digital inputs and various serial interfaces (RS485, USB, or an optional fieldbus). This method is referred to as remote (auto on) and is the default input setting. See more details in 11.2.2 Local (Hand On) and Remote (Auto On) Control.

11.2.2 Local (Hand On) and Remote (Auto On) Control

Active reference refers to the active input source. The active reference is configured via parameters. For more information, refer to the product-specific Programming Guide.

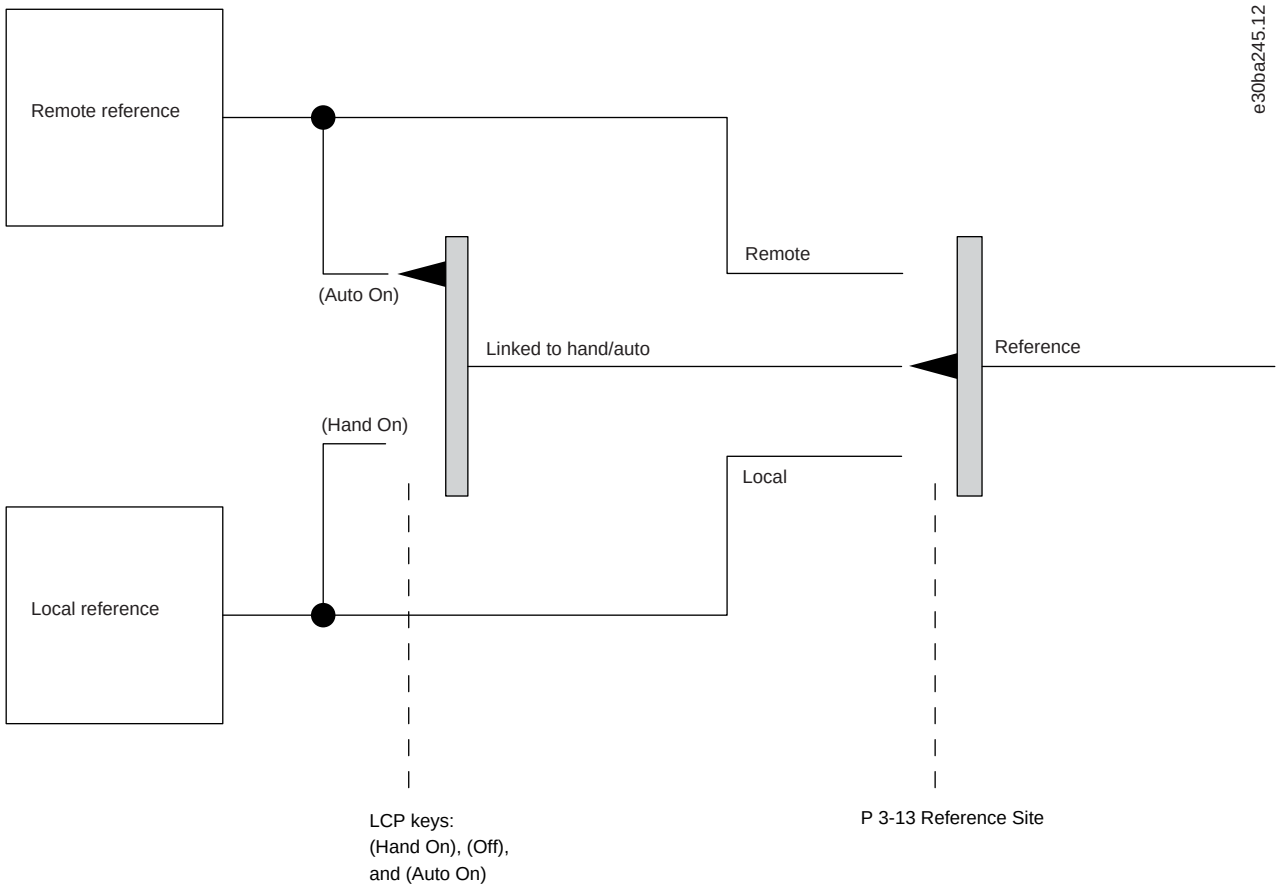

Illustration 141: Selecting Active Reference

Remote handling of references applies to both open-loop and closed-loop operation. Up to 8 internal preset references can be programmed into the drive. The active internal preset reference can be selected externally through digital control inputs or through the serial communication bus.

External references can also be supplied to the drive, most commonly through an analog control input. All reference sources and the bus references are added to produce the total external reference. The active reference can be selected from the following:

- External reference.
- Preset reference.
- Setpoint.
- Sum of the external reference, preset reference, and setpoint.

The active reference can be scaled. The scaled reference is calculated as follows:

$$\text{Reference} = X + X \times \left(\frac{Y}{100}\right)$$

X is the external reference, the preset reference, or the sum of these references, and Y is the internal preset relative reference I %. If Y, *parameter 3-14 Preset Relative Reference* is set to 0%, the scaling does not affect the reference.

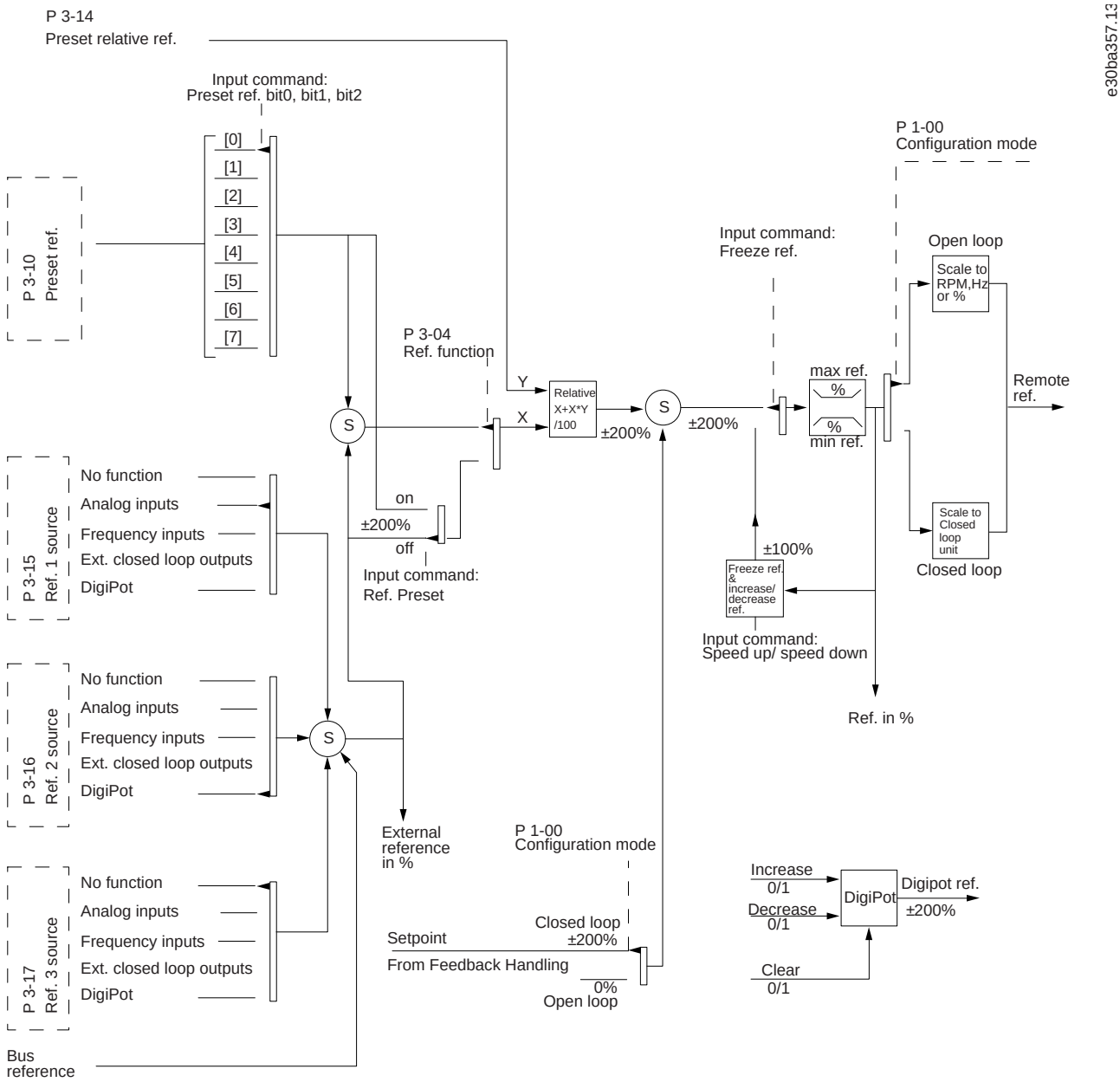

Illustration 142: Remote Handling of Reference

11.3 Reference Limits

The reference range, minimum reference, and maximum reference define the allowed range of the sum of all references. The sum of all references is clamped when necessary. The relation between the resulting reference (after clamping) and the sum of all references are shown in illustration 143 and illustration 144.

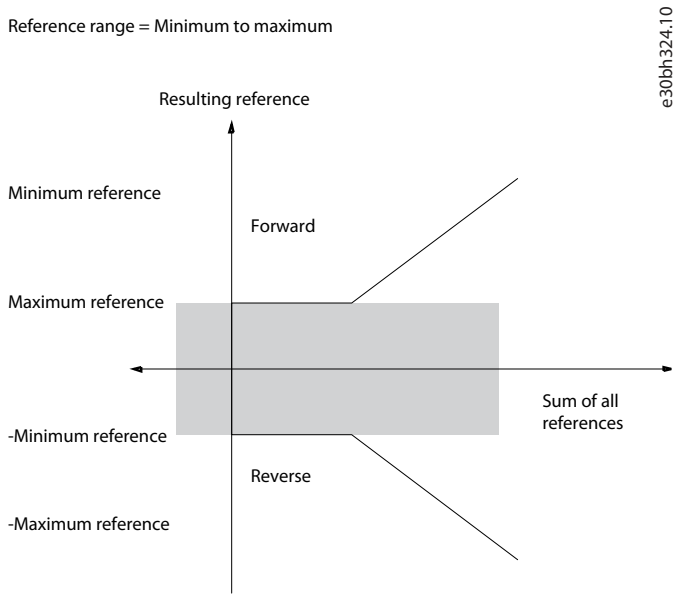

Illustration 143: Sum of All References When Reference Range is Set to 0

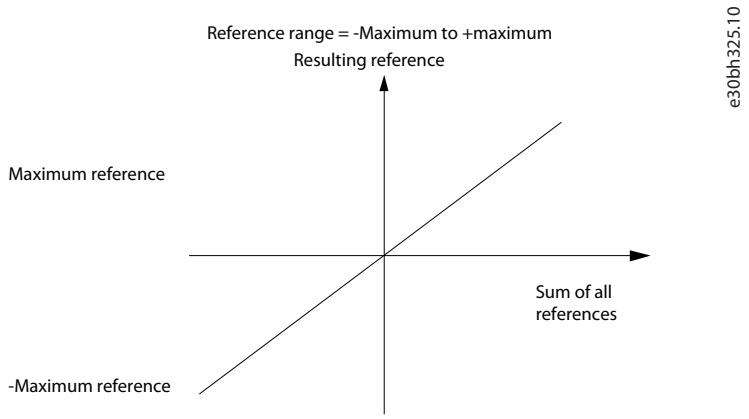

Illustration 144: Sum of All References When Reference Range is Set to 1

The minimum reference cannot be set to less than 0, unless the configuration mode is set to Process. In that case, the following relations between the resulting reference (after clamping) and the sum of all references are as shown in illustration 145.

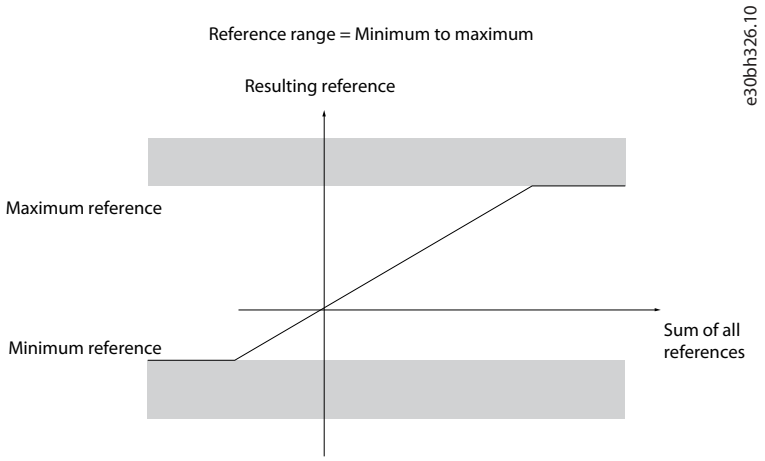

Illustration 145: Sum of all References when Configuration Mode is set to Process

11.4 PID Control

11.4.1 Speed PID Control

Speed PID control maintains a constant motor speed regardless of the changing load on the motor.

Table 123: Control Configurations with Active Speed Control

Parameter 1-00 Configuration Mode	***Parameter 1-01 Motor Control Principle***			
	U/f	**VVC+**	**Flux Sensorless**	**Flux with encoder feedback**
[0] Speed open loop	Active	Active	Active	–
[1] Speed closed loop	–	Not active [(1)]	–	Active
[2] Torque	–	–	–	Not active
[3] Process	Not active	Not active	Not active	–
[4] Torque open loop	–	Not active	–	–
[5] Wobble	Not active	Not active	Not active	Not active
[6] Surface winder	Not active	Not active	Not active	–
[7] Extended PID speed OL	Not active	Not active	Not active	–
[8] Extended PID speed CL	–	Not active	–	Not active

[1] *Not active means that the specific mode is available, but the speed control is not active in that mode.*

NOTICE

The speed control PID works under the default parameter setting, but tuning the parameters is highly recommended to optimize the motor control performance. The 2 flux motor control principles are particularly dependent on proper tuning to yield their full potential.

For details about parameters and programming, refer to the VLT® AutomationDrive FC 301/FC 302 Programming Guide.

11.4.2 Tuning PID Speed Control

The following tuning guidelines are relevant when using 1 of the flux motor control principles in applications where the load is mainly inertial (with a low amount of friction).

The value of *parameter 30-83 Speed PID Proportional Gain* depends on the combined inertia of the motor and load, and the selected bandwidth can be calculated using the following formula:

$$\text{Par. } 7-02 = \frac{\text{Total inertia } [\text{kgm}^2]\ x \text{ par. } 1-25}{\text{Par. } 1-20\ x\ 9550}\ x \text{ Bandwidth } [\text{rad}/s]$$

NOTICE

Parameter 1-20 Motor Power [kW] is the motor power in [kW] (that is, enter 4 kW instead of 4000 W in the formula).

A practical value for the bandwidth is 20 rad/s. Check the result of the *parameter 30-83 Speed PID Proportional Gain* calculation against the following formula (not required when using high-resolution feedback such as a SinCos feedback):

$$\text{Par. } 7-02_{\text{MAX}} = \frac{0.01\ x\ 4\ x \text{ encoder resolution } x \text{ par. } 7-06}{2\ x\ \pi}\ x \text{ Maximum torque ripple } [\%]$$

A good start value for *parameter 7-06 Speed PID Lowpass Filter Time* is 5 ms (lower encoder resolution calls for a higher filter value). Typically, a maximum torque ripple of 3% is acceptable. For incremental encoders, the encoder resolution is found in either *parameter 5-70 Term 32/33 Pulses Per Revolution* (24 V HTL on standard drive) or *parameter 17-11 Resolution (PPR)* (5 V TTL on VLT® Encoder Input MCB 102 option).

Generally, the practical maximum limit of *parameter 30-83 Speed PID Proportional Gain* is determined by the encoder resolution and the feedback filter time. But other factors in the application might limit the *parameter 30-83 Speed PID Proportional Gain* to a lower value.

To minimize the overshoot, *parameter 7-03 Speed PID Integral Time* could be set to approximately 2.5 s (varies with the application).

Parameter 7-04 Speed PID Differentiation Time should be set to 0 until everything else is tuned. If necessary, finish the tuning by experimenting with small increments of this setting.

11.4.3 Process PID Control

Use the process PID control to control application parameters that can be measured by a sensor (that is, pressure, temperature, flow) and be affected by the connected motor through a pump, fan or otherwise.

To see the control configurations where the Process Control is possible, refer to table 124. When a flux vector motor control principle is used, take care also to tune the speed control PID parameters. Refer to 11.5.2 Control Structure in VVC+, 11.5.3 Control Structure in Flux Sensorless, and 11.5.4 Control Structure in Flux with Motor Feedback to see where the speed control is active.

Table 124: Process PID Control Settings

Parameter 1-00 Configuration Mode	***Parameter 1-01 Motor Control Principle***			
	U/f	**VVC+**	**Flux sensorless**	**Flux with encoder feedback**
[3] Process	–	Process	Process & Speed	Process & Speed

NOTICE

The process control PID works under the default parameter setting, but tuning the parameters is highly recommended to optimize the application control performance. The 2 flux motor control principles are specially dependent on proper speed control PID tuning (before tuning the process control PID) to yield their full potential.

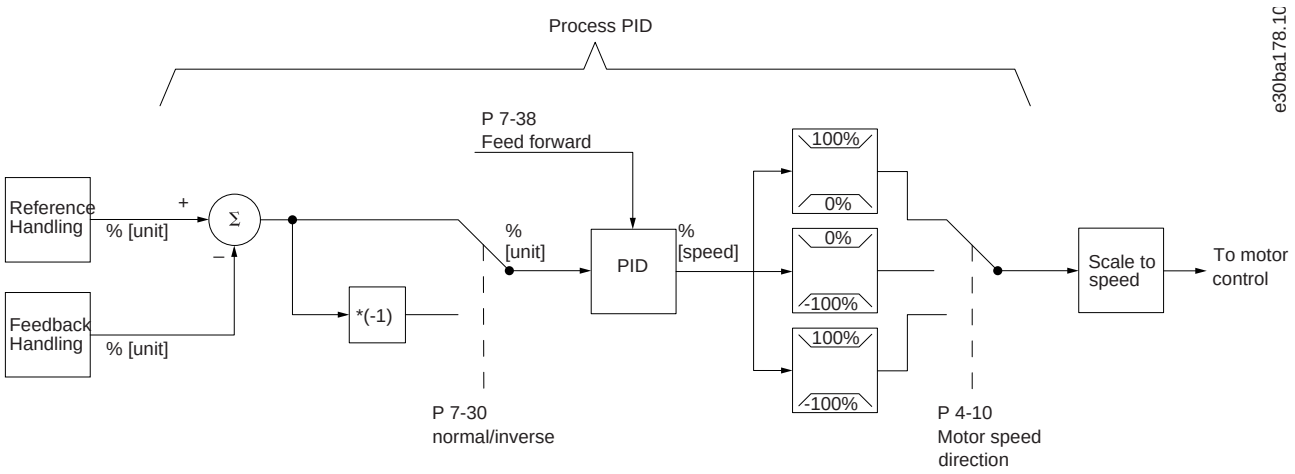

Illustration 146: Process PID Control Diagram

11.4.4 Advanced PID Control

Consult thee VLT® AutomationDrive FC 301/FC 302 Programming Guide for advanced PID control parameters.

11.5 More Operating Principles

A drive rectifies AC voltage from mains into DC voltage, after which this DC voltage is converted into an AC current with a variable amplitude and frequency.

The motor is supplied with variable voltage/current and frequency, which enables variable speed control of 3-phased, standard induction motors and permanent magnet motors.

The drive can control either the speed or the torque on the motor shaft.

Speed control

There are 2 types of speed control:

- Speed open-loop control which does not require any feedback from the motor (sensorless).
- Speed closed-loop PID control requires a speed feedback to an input. A properly optimized speed closed-loop control has higher accuracy than a speed open-loop control.

Torque control

The torque control function is used in applications where the torque on the motor output shaft controls the application as tension control. Torque control can be either in VVV+ torque open loop in flux sensorless or in flux control closed loop. The best performance is with flux closed loop, especially near 0 speed.

Torque setting is done by setting an analog, digital, or bus-controlled reference. When running torque control, it is recommended to make a full AMA procedure as the correct motor data is of high importance for optimum performance.

- Closed loop in flux mode with encoder feedback offers superior performance in all 4 quadrants and at all motor speeds.
- Open loop in VVC+ mode. The function is used in mechanical robust applications, but the accuracy is limited. Open-loop torque function works only in 1 speed direction. The torque is calculated on basic current measurement internally in the drive.

Speed/torque reference

The reference to these controls can either be a single reference or be the sum of various references including relatively scaled references.

11.5.1 FC 301 versus FC 302 Control Principle

VLT® AutomationDrive FC 301 is a general-purpose drive for variable speed applications. The control principle is based on VVC+. FC 301 can handle both asynchronous and PM motors.

The current sensing principle in FC 301 is based on current measurement in the DC link or motor phase. The ground fault protection on the motor side is solved by a desaturation circuit in the IGBTs connected to the control board. Short-circuit behavior on FC 301 depends on the current transducer in the positive DC link and the desaturation protection with feedback from the 3 lower IGBTs and the brake.

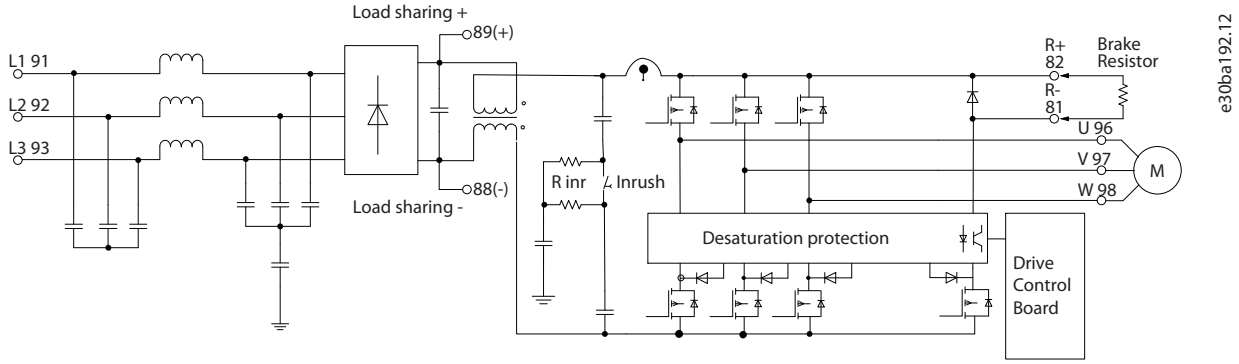

Illustration 147: Control Principle, FC 301

FC 302 is a high-performance drive for demanding applications. The drive handles various kinds of motor control principles such as U/f special motor mode, VVC+, or flux vector motor control.

FC 302 is able to handle Permanent Magnet Synchronous Motors (brushless servo motors) and normal squirrel cage induction motors.

Short-circuit behavior on FC 302 depends on the 3 current transducers in the motor phases and the desaturation protection with feedback from the brake.

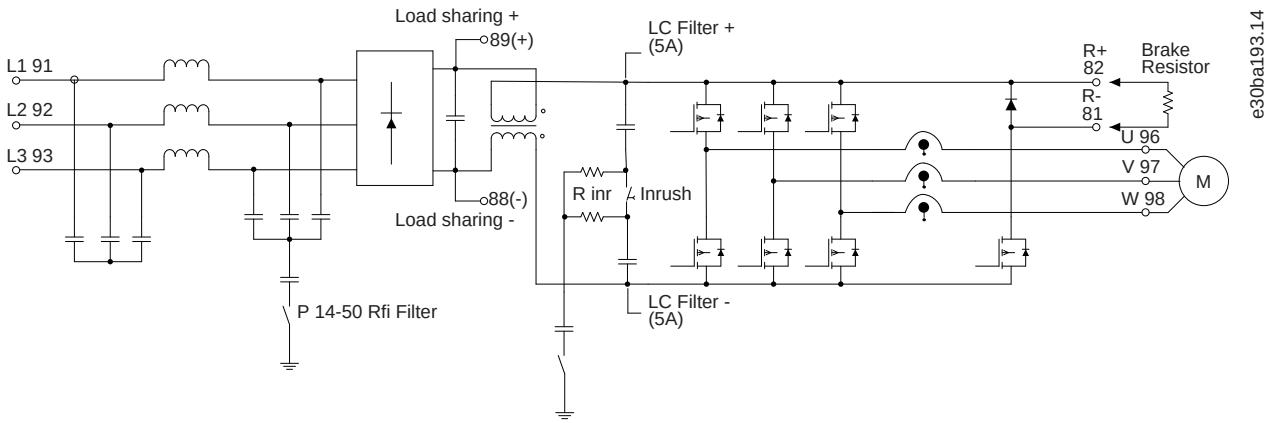

Illustration 148: Control Principle, FC 302

11.5.2 Control Structure in VVC+

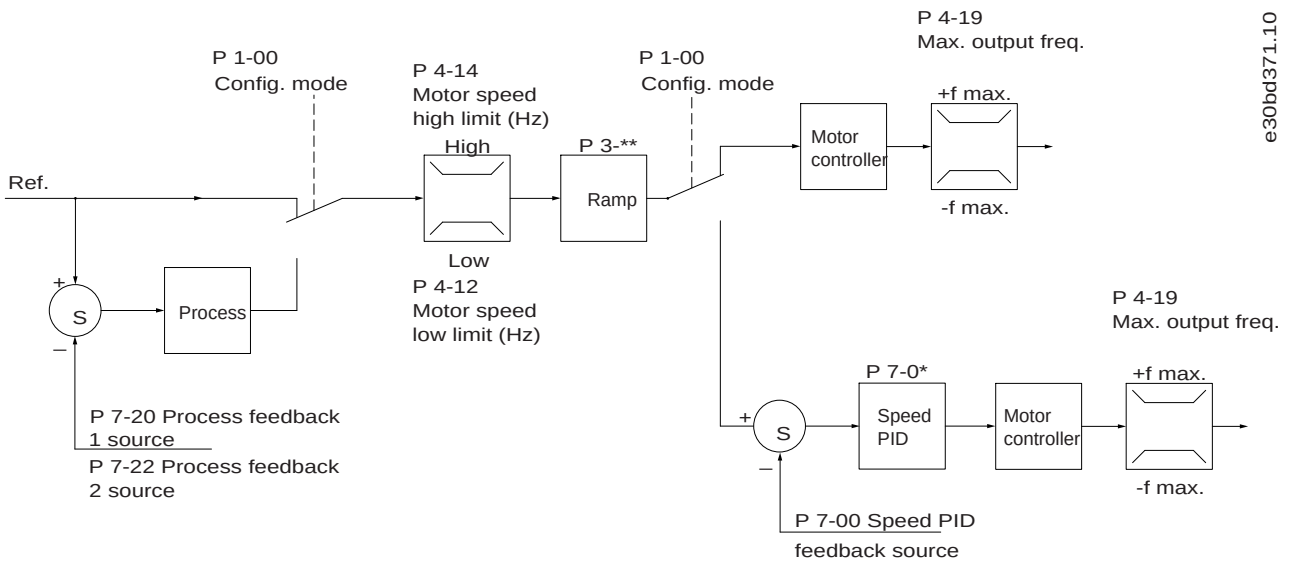

Illustration 149: Control Structure in VVC+ Open-loop Configurations and Closed-loop Configurations

In the configuration shown in above illustration, *parameter 1-01 Motor Control Principle* is set to *[1] VVC+* and *parameter 1-00 Configuration Mode* is set to *[0] Speed open loop*. The resulting reference from the reference handling system is received and fed through the ramp limitation and speed limitation before being sent to the motor control. The output of the motor control is then limited by the maximum frequency limit.

If *parameter 1-00 Configuration Mode* is set to *[1] Speed closed loop*, the resulting reference is passed from the ramp limitation and speed limitation into a speed PID control. The speed PID control parameters are in *parameter group 7-0* Speed PID Ctrl*. The resulting reference from the speed PID control is sent to the motor control limited by the frequency limit.

Select *[3] Process* in *parameter 1-00 Configuration Mode* to use the process PID control for closed-loop control of speed or pressure in the controlled application. The process PID parameters are in *parameter groups 7-2* Process Ctrl. Feedb* and *7-3* Process PID Ctrl*.

11.5.3 Control Structure in Flux Sensorless

Control structure in Flux sensorless open-loop and closed-loop configurations.

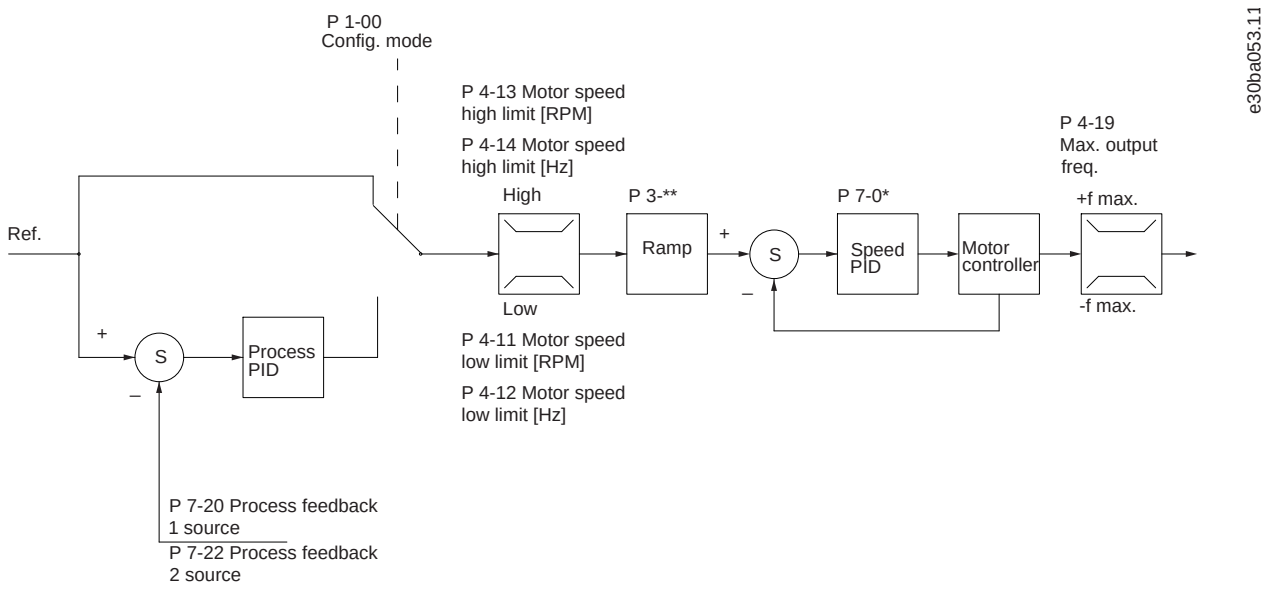

Illustration 150: Control Structure in Flux Sensorless

In the configuration shown, *parameter 1-01 Motor Control Principle* is set to *[2] Flux sensorless* and *parameter 1-00 Configuration Mode* is set to *[0] Speed open loop*. The resulting reference from the reference handling system is fed through the ramp and speed limitations as determined by the parameter settings indicated.

An estimated speed feedback is generated to the speed PID to control the output frequency.

The speed PID must be set with its P, I, and D parameters (*parameter group 7-0* Controllers*).

Select *[3] Process* in *parameter 1-00 Configuration Mode* to use the process PID control for closed-loop control of speed or pressure in the controlled application. The process PID parameters are in *parameter groups 7-2* Process Ctrl. Feedb* and *7-3* Process PID Ctrl*.

11.5.4 Control Structure in Flux with Motor Feedback

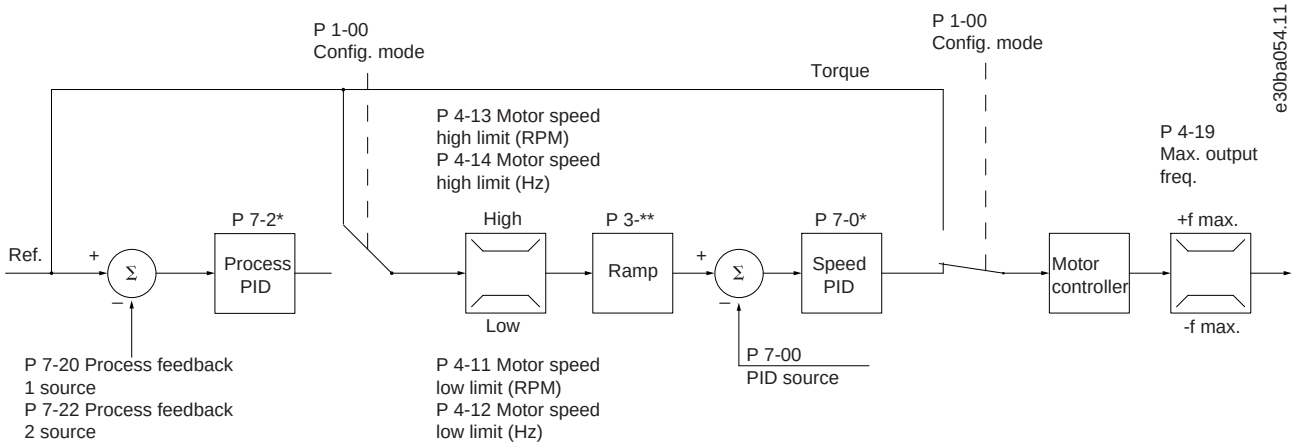

Illustration 151: Control Structure in Flux with Motor Feedback

In the configuration shown, *parameter 1-01 Motor Control Principle* is set to *[3] Flux w motor feedb* and *parameter 1-00 Configuration Mode* is set to *[1] Speed closed loop*.

The motor control in this configuration relies on a feedback signal from an encoder mounted directly on the motor (set in *parameter 1-02 Flux Motor Feedback Source*).

Select *[1] Speed closed loop* in *parameter 1-00 Configuration Mode* to use the resulting reference as an input for the speed PID control. The speed PID control parameters are located in *parameter group 7-0* Speed PID Ctrl*.

Select *[2] Torque* in *parameter 1-00 Configuration Mode* to use the resulting reference directly as a torque reference. Torque control can only be selected in the flux with motor feedback (*parameter 1-01 Motor Control Principle*) configuration. When this mode has been selected, the reference uses the Nm unit. It requires no torque feedback, since the actual torque is calculated based on the current measurement of the drive.

Select *[3] Process* in *parameter 1-00 Configuration Mode* to use the process PID control for closed-loop control of a process variable (for example, speed) in the controlled application.

12 How to Order a Drive

12.1 Drive Configurator

1	2	3	4	5	6	7	8	9	10	11	12	13	14	15	16	17	18	19	20	21	22	23	24	25	26	27	28	29	30	31	32	33	34	35	36	37	38	39
F	C	-				P				T											X	X	S	X	X	X	X	A		B		C					D	

e30bb836.10

Illustration 152: Type Code Example

Configure the right drive for the right application from the internet-based Drive Configurator and generate the type code string. The Drive Configurator automatically generates an 8-digit sales number to be delivered to the local sales office. Furthermore, it is possible to establish a project list with several products and send it to a Danfoss sales representative.

The Drive Configurator can be found on the global website: www.danfoss.com/drives.

12.1.1 Type Code

An example of the type code is:

FC-302PK75T5E20H1BGCXXXSXXXXA0BXCXXXXD0

The meaning of the characters in the string is in table 125 and table 126. In the example above, a PROFIBUS V1 and a 24 V back-up option is built in.

Table 125: Ordering Type Code, Enclosure Sizes A, B, and C

Description	Position	Possible options
Product group	1–3	FC 30x
Drive series	4–6	301: FC 301 302: FC 302
Power rating	8–10	0.25–75 kW (0.34–90 hp)
Phases	11	Three phases (T)
Mains voltage	11–12	T2: 200–240 V T4: 380–480 V T5: 380–500 V T6: 525–600 V T7: 525–690 V

Description	Position	Possible options
Enclosure	13–15	E20: IP20
		E55: IP55/NEMA Type 12
		P20: IP20 (with backplate)
		P21: IP21/NEMA Type 12 (with backplate)
		P55: IP55/NEMA Type 12 (with backplate)
		Z20: IP21 (1)
		E66: IP66
RFI filter	16–17	Hx: No EMC filters built into the drive (600 V units only)
		H1: Integrated EMC filter. Fulfill EN 55011 Class A1/B and EN/IEC 61800-3 Category 1/2
		H2: No extra EMC filter. Fulfil EN 55011 Class A2 and EN/IEC 61800-3 Category 3
		H3: Integrated EMC filter. Fulfill EN 55011 class A1/B and EN/IEC 61800-3 Category 1/2 (enclosure size A1 only) (1)
		H4: Integrated EMC filter. Fulfill EN 55011 Class A1 and EN/IEC 61800-3 Category 2
		H5: Marine versions. Fulfilll same emission levels as H2 versions.
Brake	18	B: Brake chopper included
		X: No brake chopper included
		T: Safe stop no brake (1)
		U: Safe stop brake chopper (1)
Display	19	G: Graphical local control panel (LCP 102) N: Numerical local control panel (LCP 101) Wireless control panel (LCP 103) X: No local control panel
Coating PCB	20	C: Coated PCB R: Ruggedized X. No coated PCB
Mains option	21	X. No mains option
		1: Mains disconnect
		3: Mains disconnect and fuse (2)
		5: Mains disconnect, fuse, and load sharing (2) (3)
		7: Fuse (2)
		8: Mains disconnect and load sharing (3)
		A: Fuse and load sharing (2) (3)
		D: Load sharing (3)

Description	Position	Possible options
Adaptation	22	X: Standard cable entries O: European metric thread in cable entries (A4, A5, B1, B2, C1, and C2 only) S. Imperial cable entries (A5, B1, B2, C1, and C2 only)
Adaptation	23	X: No adaptation
Software release	24–27	SXXX: Latest release, standard software S067: Integrated Motion Controller LX1X: Condition-based monitoring
Software language	28	X: Not used

[1] *FC 301/enclosure size A1 only.*

[2] *US market only.*

[3] *A and B3 enclosures have load sharing built in by default.*

Table 126: Ordering Type Code, Options

Description	Position	Possible options
A options	29–30	AX: No A option A0: VLT® PROFIBUS DP-V1 MCA 101 (standard) A4: VLT® DeviceNet MCA 104 (standard) A6: VLT® CANopen MCA 105 (standard) AN: VLT® EtherNet/IP MCA 121 AL: VLT® PROFINET MCA 120 AQ: VLT® Modbus TCP MCA 122 AT: VLT® PROFIBUS Converter VLT 300 MCA 113 AU: VLT® PROFIBUS Converter VLT 5000 MCA 114 AY: VLT® POWERLINK MCA 123 A8: VLT® EtherCAT MCA 124

Description	Position	Possible options
B options	31–32	BX: No option BK: VLT® General Purpose I/O Option MCB 101 BR: VLT® Encoder Option MCB 102 BU: VLT® Resolver Option MCB 103 BP: VLT® Relay Option MCB 105 BZ: VLT® Safety PLC Interface MCB 108 B2: VLT® PTC Thermistor Card MCB 112 B4: VLT® Sensor Input MCB 114 B6: VLT® Safe Option TTL MCB 150 B7: VLT® Safe Option HTL MCB 151 B8: VLT® PROFIsafe MCB 152
C0 options	33–34	CX: No option C4:VLT® Motion Control MCO 305
C1 options	35	X: No options R: VLT® Extended Relay Card MCB 113
C option soft-ware/E1 options	36–37	XX: Standard controller 7: MCB 159 Sensorless Safety (Factory mounted. Must be ordered with VLT® Safety Option MCB 151) 10: VLT® Synchronizing Controller MCO 350 11: VLT® Positioning Controller MCO 351
D options	38–39	DX: No option D0: VLT® Extended 24 V DC Back-up MCB 107 D1: VLT®Real-time Clock MCB 117

NOTICE

For power sizes over 75 kW, see the VLT® AutomationDrive FC 301/FC 302 90–1200 kW Design Guide.

12.1.2 Language Packages

Drives are automatically delivered with a language package relevant to the region from which it is ordered. 4 regional language packages cover the following languages:

Table 127: Regional Language Packages

Language package 1	Language package 2	Language package 3	Language package 4
English	English	English	English
German	German	German	German
French	Chinese	Slovenian	Spanish
Danish	Korean	Bulgarian	English US
Spanish	Thai	Romanian	Brazilian Portuguese
Swedish	Traditional Chinese	Hungarian	Turkish
Italian	Bahasa Indonesian	Czech	Polish
Finnish		Russian	

To order drives with a different language package, contact the local sales office.

12.2 Order Numbers for Options and Accessories

12.2.1 Order Numbers for Options for Slot A

Table 128: Ordering Numbers for A Options

Description	Ordering number	
	Uncoated	Coated
VLT® PROFIBUS DP MCA 101	130B1100	130B1200
VLT® DeviceNet MCA 104	130B1102	130B1202
VLT® CANopen MCA 105	130B1103	130B1205
VLT® PROFIBUS Converter MCA 113	130B1245	–
VLT® PROFIBUS Converter MCA 114	–	130B1246
VLT® PROFINET MCA 120	130B1135	130B1235
VLT® EtherNet/IP MCA 121	130B1119	130B1219
VLT® Modbus TCP MCA 122	130B1196	130B1296
VLT® POWERLINK MCA 123	130B1489	130B1490
VLT® EtherCAT MCA 124	130B5546	130B5646
VLT® DeviceNet Converter MCA 194	–	130B5601

12.2.2 Order Numbers for Options for Slot B

Table 129: Ordering Numbers for B Options

Descriptions	Ordering number	
	Uncoated	Coated
VLT® General Purpose I/O MCB 101	130B1125	130B1212

Descriptions	Ordering number	
VLT® Encoder Input MCB 102	130B1115	130B1203
VLT® Resolver Input MCB 103	130B1127	130B1227
VLT® Relay Option MCB 105	130B1110	130B1210
VLT® Safe PLC I/O MCB 108	130B1120	130B1220
VLT® PTC Thermistor Card MCB 112	–	130B1137
VLT® Programmable I/O MCB 115	–	130B1266
VLT® Safe option MCB 150	–	130B3280
VLT® Safe option MCB 151	–	130B3290
VLT® PROFIsafe MCB 152	130B1135	130B1235
VLT®Sensorless Safety MCB 159 (1)	Select VLT® Sensorless Safety MCB 159 as a C1 option in the configurator when ordering a new drive.	

[1] *MCB 159 is factory-mounted and must be ordered with VLT® Safety Option MCB 151.*

12.2.3 Order Numbers for Options for Slot C

Table 130: Ordering Numbers for C Options

Description	Ordering number	
	Uncoated	**Coated**
VLT® Motion Controller MCO 305	130B1134	130B1234
VLT® Synchronizing Controller MCO 350	130B1152	130B1252
VLT® Positioning Controller MCO 351	130B1153	120B1253
VLT® Extended Relay Card MCB 113	130B1164	130B1264
VLT® Mounting Kit for C Option, 40 mm, enclosure sizes A2/A3	130B7530	
VLT® Mounting Kit for C Option, 60 mm, enclosure sizes A2/A3	130B7531	
VLT® Mounting Kit for C Option, enclosure size A5	130B7532	
VLT® Mounting Kit for C Option, enclosure sizes B/C/D/E/F (except B3)	130B7533	
VLT® Mounting Kit for C Option, 40 mm, enclosure size B3	130B1413	
VLT® Mounting Kit for C Option, 60 mm, enclosure size B3	130B1414	

12.2.4 Order Numbers for Options for Slot D

Table 131: Order Numbers for D Options

Description	Order number	
	Uncoated	**Coated**
VLT® 24 V DC Supply MCB 107	130B1108	130B1208

Description	Order number	
VLT® Real-time Clock MCB 117	–	130B6544

12.2.5 Order Numbers for VLT® Leakage Current Monitor Kits

Table 132: Order Numbers for Leakage Current Monitor Kits

Description	Order number
VLT® Leakage Current Monitor Kit, enclosure sizes A2/A3	130B5645
VLT® Leakage Current Monitor Kit, enclosure size B3	130B5764
VLT® Leakage Current Monitor Kit, enclosure size B4	130B5765
VLT® Leakage Current Monitor Kit, enclosure size C3	130B6226
VLT® Leakage Current Monitor Kit, enclosure size C4	130B5647

12.2.6 Order Numbers for Miscellaneous Hardware

Table 133: Ordering Numbers for Hardware Options

Description	Ordering number
	Uncoated
VLT® Panel through kit enclosure size A5	130B1028
VLT® Panel through kit enclosure size B1	130B1046
VLT® Panel through kit enclosure size B2	130B1047
VLT® Panel through kit enclosure size C1	130B1048
VLT® Panel through kit enclosure size C2	130B1049
VLT® Mounting brackets for enclosure size A5	130B1080
VLT® Mounting brackets for enclosure size B1	130B1081
VLT® Mounting brackets for enclosure size B2	130B1082
VLT® Mounting brackets for enclosure size C1	130B1083
VLT® Mounting brackets for enclosure size C2	130B1084
VLT® IP 21/Type 1 Kit, enclosure size A1	130B1121
VLT® IP 21/Type 1 Kit, enclosure size A2	130B1122
VLT® IP 21/Type 1 Kit, enclosure size A3	130B1123
VLT® IP 21/Type 1 Top Kit, enclosure size A2	130B1132
VLT® IP 21/Type 1 Top Kit, enclosure size A3	130B1133
VLT® Back plate IP55/Type12, enclosure size A5	130B1098
VLT® Back plate IP21/Type 1, IP55/Type 12, enclosure size B1	130B3383
VLT® Back plate IP21/Type 1, IP55/Type 12, enclosure size B2	130B3397

Description	Ordering number
VLT® Back plate IP20/Type 1, enclosure size B4	130B4172
VLT® Back plate IP21/Type 1, IP55/Type 12, enclosure size C1	130B3910
VLT® Back plate IP21/Type 1, IP55/Type 12, enclosure size C2	130B3911
VLT® Back plate IP20/Type 1, enclosure size C3	130B4170
VLT® Back plate IP20/Type 1, enclosure size C4	130B4171
VLT® Back plate IP66/Type 4X, enclosure size A5	130B3242
VLT® Back plate in stainless steel IP66/Type 4X, enclosure size B1	130B3434
VLT® Back plate in stainless steel IP66/Type 4X, enclosure size B2	130B3465
VLT® Back plate in stainless steel IP66/Type 4X, enclosure size C1	130B3468
VLT® Back plate in stainless steel IP66/Type 4X, enclosure size C2	130B3491
VLT® PROFIBUS Adapter Sub-D9 Connector	130B1112
PROFIBUS shield plate kit for IP20, enclosure sizes A1, A2, and A3	130B0524
Terminal block for DC link connection on enclosure sizes A2/A3	130B1064
VLT® Screw terminals	130B1116
VLT® USB extension, 350 mm (13.8 in) cable	130B1155
VLT® USB extension, 650 mm (25.6 in) cable	130B1156
VLT® Back frame A2 for 1 brake resistor	175U0085
VLT® Back frame A3 for 1 brake resistor	175U0088
VLT® Back frame A2 for 2 brake resistors	175U0087
VLT® Back frame A3 for 2 brake resistors	175U0086
VLT® weather shield for enclosure sizes A4, A5, B1, B2	130B4598
VLT® weather shield for enclosure sizes C1, C2	130B4597

12.2.7 Order Numbers for Local Control Panel Options

Table 134: Order Numbers for Local Control Panels

Description	Order number
VLT® LCP 101 Numeric Local Control Pad	130B1124
VLT® LCP 102 Graphical Local Control Pad	130B1107
VLT® Wireless Control Panel LCP 103	134B0460
VLT® Cable for LCP 2, 3 m (9.8 ft)	175Z0929
VLT® Panel Mounting Kit for all LCP types	130B1170
VLT® Panel Mounting Kit with graphical LCP	130B1113
VLT® Panel Mounting Kit with numerical LCP	130B1114
VLT® LCP Mounting Kit, without LCP	130B1117

Description	Order number
VLT® LCP Mounting Kit Blind Cover IP55/66, 8 m (26.2 ft)	130B1129
VLT® Control Panel LCP 102, graphical	130B1078
VLT® Blind cover, with Danfoss logo, IP55/66	130B1077
Remote mounting kit for LCP with cover for outdoor mounting with 3 m (10 ft) cable	134B5223
Remote mounting kit for LCP with cover for outdoor mounting with 5 m (16 ft) cable	134B5224
Remote mounting kit for LCP with cover for outdoor mounting with 10 m (33 ft) cable	134B5225

12.2.8 Order Numbers for PC Software

Table 135: Order Numbers for VLT® Motion Control Tool MCT 10

Description	Order number
VLT® Motion Control Tool MCT 10, 1 license	130B1000
VLT® Motion Control Tool MCT 10, 5 licenses	130B1001
VLT® Motion Control Tool MCT 10, 10 licenses	130B1002
VLT® Motion Control Tool MCT 10, 25 licenses	130B1003
VLT® Motion Control Tool MCT 10, 50 licenses	130B1004
VLT® Motion Control Tool MCT 10, 100 licenses	130B1005
VLT® Motion Control Tool MCT 10, >100 licenses	130B1006

12.2.9 Ordering of VLT® Brake Resistors MCE 101

Explanation of terms used in the tables for ordering brake resistors

Horizontal braking: Duty cycle 10% and maximum 120 s repetition rates according to the reference brake profile. Average power corresponds to 6%.

Vertical braking: Duty cycle 40% and maximum 120 s repetition rates according to the reference brake profile. Average power corresponds to 27%.

Cable cross-section: Recommended minimum value based on PVC-insulated copper cable, 30 °C (86 °F) ambient temperature with normal heat dissipation. All cabling must comply with national and local regulations on cable cross-sections and ambient temperature.

Thermal relay: Brake current setting of external thermal relay. All resistors have a built-in thermal relay switch N.C.

The IP54 is with 1000 mm (39.4 in) fixed, unshielded cable. Can be used for vertical and horizontal mounting. For horizontal mounting, derating is required.

IP21 and IP65 are with screw terminal for cable termination and can be used for horizontal and vertical mounting. For horizontal mounting, derating is required.

IP20 is with bolt connection for cable termination. Used for floor mounting.

IP65 is a flat-pack type brake resistor with fixed cable.

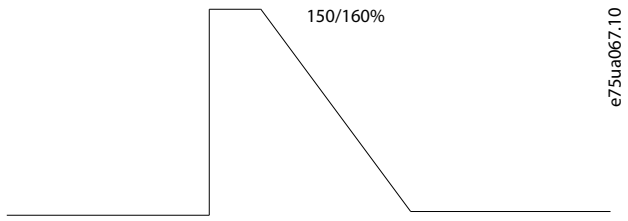

Illustration 153: Horizontal Loads

Illustration 154: Vertical Loads

12.2.9.1 Order Numbers for Brake Resistors FC 301, T2, Horizontal Braking 10% Duty Cycle

Table 136: Ordering Numbers for Brake Resistors, T2, Horizontal Braking 10% Duty Cycle

FC 301				Horizontal braking 10% duty cycle							
Drive data				Brake resistor data						Installation	
						Danfoss part number					
Mains type	P_m [kW (hp)]	R_{min} [Ω]	$R_{br.nim}$ [Ω]	R_{rec} [Ω]	$P_{br.cont.}$ [kW]	Wire IP54	Screw terminal IP21	Screw terminal IP65	Bolt connection IP20	Cable cross-section [mm² (AWG)]	Thermo relay [A]
T2	0.25 (0.34)	368	415.9	410	0.100	175U3004	–	–	–	1.5 (16)	0.5
T2	0.37 (0.50)	248	280.7	300	0.100	175U3006	–	–	–	1.5 (16)	0.6
T2	0.55 (0.75)	166	188.7	200	0.100	175U3011	–	–	–	1.5 (16)	0.7
T2	0.75 (1.0)	121	138.4	145	0.100	175U3016	–	–	–	1.5 (16)	0.8
T2	1.1 (1.5)	81	92	100	0.100	175U3021	–	–	–	1.5 (16)	0.9
T2	1.5 (2.0)	58.5	66.5	70	0.200	175U3026	–	–	–	1.5 (16)	1.6
T2	2.2 (3.0)	29.1	32.3	35	0.300	175U3031	–	–	–	1.5 (16)	1.9
T2	3.0 (4.0)	29.1	32.3	35	0.300	175U3325	–	–	–	1.5 (16)	2.7

FC 301				Horizontal braking 10% duty cycle							
T2	3.7 (5.0)	22.5	25.9	27	0.360	175U3326	175U3477	175U3478	–	1.5 (16)	3.5
T2	5.5 (7.5)	17.7	19.7	18	0.570	175U3327	175U3442	175U3441	–	1.5 (16)	5.3
T2	7.5 (10)	12.6	14.3	13	0.680	175U3328	175U3059	175U3060	–	1.5 (16)	6.8
T2	11 (15)	8.7	9.7	9	1.130	175U3329	175U3068	175U3069	–	2.5 (14)	10.5
T2	15 (20)	5.3	7.5	5.7	1.400	175U3330	175U3073	175U3074	–	4 (12)	15
T2	18.5 (25)	5.1	6.0	5.7	1.700	175U3331	175U3483	175U3484	–	4 (12)	16
T2	22 (30)	3.2	5.0	3.5	2.200	175U3332	175U3080	175U3081	–	6 (10)	24
T2	30 (40)	3.0	3.7	3.5	2.800	175U3333	175U3448	175U3447	–	10 (8)	27
T2	37 (50)	2.4	3.0	2.8	3.200	175U3334	175U3086	175U3087	–	16 (6)	32

12.2.9.2 Order Numbers for Brake Resistors FC 301, T2, Vertical Braking 40% Duty Cycle

Table 137: Ordering Numbers for Brake Resistors, T2, Vertical Braking 40% Duty Cycle

FC 301				Vertical braking 40% duty cycle							
Drive data				Brake resistor data						Installation	
						Danfoss part number					
Mains type	P_m [kW (hp)]	R_{min} [Ω]	$R_{br.nom}$ [Ω]	R_{rec} [Ω]	$P_{br.cont.}$ [kW]	Wire IP54	Screw terminal IP21	Screw terminal IP65	Bolt connection IP20	Cable cross-section [mm² (AWG)]	Thermo relay [A]
T2	0.25 (0.34)	368	415.9	410	0.100	175U3004	–	–	–	1.5 (16)	0.5
T2	0.37 (0.50)	248	280.7	300	0.200	175U3096	–	–	–	1.5 (16)	0.8
T2	0.55 (0.75)	166	188.7	200	0.200	175U3008	–	–	–	1.5 (16)	0.9
T2	0.75 (1.0)	121	138.4	145	0.300	175U3300	–	–	–	1.5 (16)	1.3
T2	1.1 (1.5)	81	92	100	0.450	175U3301	175U3402	175U3401	–	1.5 (16)	2.0
T2	1.5 (2.0)	58.5	66.5	70	0.570	175U3302	175U3404	175U3403	–	1.5 (16)	2.7
T2	2.2 (3.0)	40.2	44.6	48	0.960	175U3303	175U3406	175U3405	–	1.5 (16)	4.2
T2	3.0 (4.0)	29.1	32.3	35	1.130	175U3304	175U3408	175U3407	–	1.5 (16)	5.4

FC 301				Vertical braking 40% duty cycle							
T2	3.7 (4.0)	22.5	25.9	27	1.400	175U3305	175U3410	175U3409	–	1.5 (16)	6.7
T2	5.5 (7.5)	17.7	19.7	18	2.200	175U3306	175U3412	175U3411	–	1.5 (16)	10.4
T2	7.5 (10)	12.6	14.3	13	3.200	175U3307	175U3414	175U3413	–	2.5 (14)	14.7
T2	11 (15)	8.7	9.7	9.0	5.500	–	175U3176	175U3177	–	4 (12)	23
T2	15 (20)	5.3	7.5	5.7	6.000	–	–	–	175U3233	10 (8)	33
T2	18.5 (25)	5.1	6.0	5.7	8.000	–	–	–	175U3234	10 (8)	38
T2	22 (30)	3.2	5.0	3.5	9.000	–	–	–	175U3235	16 (6)	51
T2	30 (40)	3.0	3.7	3.5	14.000	–	–	–	175U3224	25 (4)	63
T2	37 (50)	2.4	3.0	2.8	17.000	–	–	–	175U3227	35 (2)	78

12.2.9.3 Order Numbers for Brake Resistors FC 301, T2, Flat-pack for Horizontal Conveyors

Table 138: Flat-pack IP65 Brake Resistors for Horizontal Conveyors, FC 301 T2, 200–240 V

			Flat-pack IP65 for horizontal conveyors			
FC 301 T2	**P_m [kW]**	**R_{min} [Ω]**	**$R_{br,nom}$ [Ω]**	**R_{rec} per item [Ω/W]**	**Duty cycle [%]**	**Ordering number**
PK25	0.25	368	416	430/100	40	175U1002
PK37	0.37	248	281	330/100 or 310/200	27 or 55	175U1003 or 175U0984
PK55	0.55	166	189	220/100 or 210/200	20 or 37	175U1004 or 175U0987
PK75	0.75	121	138	150/100 or 150/200	14 or 27	175U1005 or 175U0989
P1K1	1.1	81	92	100/100 or 100/200	10 or 19	175U1006 or 175U0991
P1K5	1.5	58.5	66.5	72/200	14	175U0992
P2K2	2.2	40.2	44.6	50/200	10	175U0993
P3K0	3.0	29.1	32.3	35/200 or 72/200	7 or 14	175U0994 or 2 x 175U0992
P3K7	3.7	22.5	25.9	60/200	11	2 x 175U0996

12.2.9.4 Order Numbers for Brake Resistors FC 301, T4, Horizontal Braking 10% Duty Cycle

Table 139: Ordering Numbers for Brake Resistors, T4, Horizontal Braking 10% Duty Cycle

FC 301	Horizontal braking 10% duty cycle	
Drive data	**Brake resistor data**	**Installation**

FC 301				Horizontal braking 10% duty cycle							
						Danfoss part number					
Mains type	**P [kW (hp)]**	**R_{min} [Ω]**	**$R_{br.nom}$ [Ω]**	**R_{rec} [Ω]**	**$P_{br.cont.}$ [kW]**	**Wire IP54**	**Screw terminal IP21**	**Screw terminal IP65**	**Bolt connection IP20**	**Cable cross-section [mm² (AWG)]**	**Thermo relay [A]**
T4	0.37 (0.50)	1000	1121.4	1200	1.000	175U3000	–	–	–	1.5 (16)	0.3
T4	0.55 (0.75)	620	749.8	850	0.100	175U3001	–	–	–	1.5 (16)	0.4
T4	0.75 (1.0)	485	547.6	630	0.100	175U3002	–	–	–	1.5 (16)	0.4
T4	1.1 (1.5)	329	365.3	410	0.1000	175U3004	–	–	–	1.5 (16)	0.5
T4	1.5 (2.0)	240	263	270	0.200	175U3007	–	–	–	1.5 (16)	0.8
T4	2.2 (3.0)	161	176.5	200	0.200	175U3008	–	–	–	1.5 (16)	0.9
T4	3.0 (4.0)	117	127.9	145	0.300	175U3300	–	–	–	1.5 (16)	1.3
T4	4.0 (5.0)	86.9	94.6	110	0.450	175U3335	175U3450	175U3449	–	1.5 (16)	1.9
T4	5.5 (7.5)	62.5	68.2	80	0.570	175U3336	175U3452	175U3451	–	1.5 (16)	2.5
T4	7.5 (10)	45.3	49.6	56	0.680	175U3337	175U3027	175U3028	–	1.5 (16)	3.3
T4	11 (15)	34.9	38	38	1.130	175U3338	175U3034	175U3035	–	1.5 (16)	5.2
T4	15 (20)	25.3	27.7	28	1.400	175U3339	175U3039	175U3040	–	1.5 (16)	6.7
T4	18.5 (25)	20.3	22.3	22	1.700	175U3340	175U3047	175U3048	–	1.5 (16)	8.3
T4	22 (30)	16.9	18.7	19	2.200	175U3357	175U3049	175U3050	–	1.5 (16)	10.1
T4	30 (40)	13.2	14.5	14	2.800	175U3341	175U3055	175U3056	–	2.5 (14)	13.3
T4	37 (50)	10.6	11.7	12	3.200	175U3359	175U3061	175U3062	–	2.5 (14)	15.3
T4	45 (60)	8.7	9.6	9.5	4.200	–	175U3065	175U3066	–	4 (12)	20
T4	55 (75)	6.6	7.8	7.0	5.500	–	175U3070	175U3071	–	6 (10)	26

FC 301				Horizontal braking 10% duty cycle							
T4	75 (100)	4.2	5.7	5.5	7.000	–	–	–	175U3231	10 (8)	36

12.2.9.5 Order Numbers for Brake Resistors FC 301, T4, Vertical Braking 40% Duty Cycle

Table 140: Ordering Numbers for Brake Resistors, T4, Vertical Braking 40% Duty Cycle

FC 301				Vertical braking 40% duty cycle							
Drive data				Brake resistor data						Installation	
						FC 301/FC 302					
Mains type	P_m [kW]	R_{min} [Ω]	$R_{br.nom}$ [Ω]	R_{rec} [Ω]	$P_{br.cont.}$ [kW]	Wire IP54	Screw terminal IP65	Screw terminal IP65	Bolt connection IP20	Cable cross-section [mm² (AWG)]	Thermo relay [A]
T4	0.37 (0.50)	1000	1121.4	1200	0.200	175U3101	–	–	–	1.5 (16)	0.4
T4	0.55 (0.75)	620	749.8	850	0.200	175U3308	–	–	–	1.5 (16)	0.5
T4	0.75 (1.0)	485	547.6	630	0.300	075U3309	–	–	–	1.5 (16)	0.7
T4	1.1 (1.5)	329	365.3	410	0.450	175U3310	175U3416	175U3415	–	1.5 (16)	1.0
T4	1.5 (2.0)	240	263	270	0.570	175U3311	175U3418	175U3417	–	1.5 (16)	1.4
T4	2.2 (3.0)	161	176.5	200	0.960	175U3312	175U3420	175U3419	–	1.5 (16)	2.1
T4	3.0 (4.0)	117	127.9	145	1.130	175U3313	175U3422	175U3421	–	1.5 (16)	2.7
T4	4.0 (5.0)	86.9	94.6	110	1.700	175U3314	175U3424	175U3423	–	1.5 (16)	3.7
T4	5.5 (7.5)	62.5	68.2	80	2.200	175U3315	175U3138	175U3139	–	1.5 (16)	5.0
T4	7.5 (10)	45.3	49.6	56	3.200	175U3316	175U3428	175U3427	–	1.5 (16)	7.1
T4	11 (15)	34.9	38	38	5.000	–	–	–	175U3236	1.5 (16)	11.5
T4	15 (20)	25.3	27.7	28	6.000	–	–	–	175U3237	2.5 (14)	14.7
T4	18.5(25)	20.3	22.3	22	8.000	–	–	–	175U3238	4 (12)	19
T4	22 (30)	16.9	18.7	19	10.000	–	–	–	175U3203	4 (12)	23
T4	30 (40)	13.2	14.5	14	14.000	–	–	–	175U3206	10 (8)	32
T4	37 (50)	10.6	11.7	12	17.000	–	–	–	175U3210	10 (8)	38
T4	45 (60)	8.7	9.6	9.5	21.000	–	–	–	175U3213	16	47
T4	55 (75)	6.6	7.8	7.0	26.000	–	–	–	175U3216	25 (4)	61
T4	75 (100)	4.2	5.7	5.5	36.000	–	–	–	175U3219	35 (2)	81

12.2.9.6 Order Numbers for Brake Resistors FC 301, T4, Flat-pack for Horizontal Conveyors

Table 141: Flat-pack IP65 Brake Resistors for Horizontal Conveyors, FC 301 T4, 380–480 V

			Flat-pack IP65 for horizontal conveyors			
FC 301 T4	**P_m [kW]**	**R_{min} [Ω]**	**$R_{br,nom}$ [Ω]**	**R_{rec} per item [Ω/W]**	**Duty cycle [%]**	**Ordering number**
PK37	0.37	620	1121	830/100	30	175U1000
PK55	0.55	620	750	830/100	20	175U1000
PK75	0.75	485	548	620/100 or 620/200	14 or 27	175U1001 or 175U0982
P1K1	1.1	329	365	430/100 or 430/200	10 or 20	175U1002 or 175U0983
P1K5	1.5	240	263	310/200	14	175U0984
P2K2	2.2	161	176.5	210/200	10	175U0987
P3K0	3.0	117	127.9	150/200 or 300/200	7 or 14	175U0989 or 2 x 175U0985
P4K0	4.0	87	95	240/200	10	2 x 175U0986
P5K5	5.5	63	68	160/200	8	2 x175U0988
P7K5	7.5	45	50	130/200	6	2 x 175U0990
P11K	11	34.9	38	80/240	5	2 x 175U0090
P15K	15	25.3	27.7	72/240	4	2 x 175U0091

12.2.9.7 Order Numbers for Brake Resistors FC 302, T2, Horizontal Braking 10% Duty Cycle

Table 142: Ordering Numbers for Brake Resistors, T2, Horizontal Braking 10% Duty Cycle

FC 302				**Horizontal braking 10% duty cycle**							
Drive data				**Brake resistor data**						**Installation**	
						Danfoss part numbers					
Mains type	**P_m [kW]**	**R_{min} [Ω]**	**$R_{br.nom}$ [Ω]**	**R_{rec} [Ω]**	**$P_{br.cont}$ [kW]**	**Wire IP54**	**Screw terminal IP65**	**Screw terminal IP20**	**Bolt connection IP20**	**Cable cross-section [mm² (AWG)]**	**Thermo relay [A]**
T2	0.25 (0.34)	380	475.3	410	0.100	175U3004	–	–	–	1.5 (16)	0.5
T2	0.37 (0.50)	275	320.8	300	0.100	175U3006	–	–	–	1.5 (16)	0.6
T2	0.55 (0.75)	188	215.7	200	0.100	175U3011	–	–	–	1.5 (16)	0.7
T2	0.75 (1.0)	130	158.1	145	0.100	175U3016	–	–	–	1.5 (16)	0.8
T2	1.1 (1.5)	81	105.1	100	0.100	175U3021	–	–	–	1.5 (16)	0.9
T2	1.5 (2.0)	58.5	76	70	0.200	175U3026	–	–	–	1.5 (16)	1.6

FC 302				Horizontal braking 10% duty cycle							
T2	2.2 (3.0)	45	51	48	0.200	175U3031	–	–	–	1.5 (16)	1.9
T2	3.0 (4.0)	31.5	37	35	0.300	175U3325	–	–	–	1.5 (16)	2.7
T2	3.7 (5.0)	22.5	29.7	27	0.360	175U3326	175U3477	175U3478	–	1.5 (16)	3.5
T2	5.5 (7.5)	17.7	19.7	18	0.570	175U3327	175U3442	175U3441	–	1.5 (16)	5.3
T2	7.5 (10)	12.6	14.3	13	0.680	175U3328	175U3059	175U3060	–	1.5 (16)	6.8
T2	11 (15)	8.7	9.7	9.0	1.130	175U3329	175U3068	175U3069	–	2.5 (14)	10.5
T2	15 (20)	5.3	7.5	5.7	1.400	175U3330	175U3073	175U3074	–	4 (12)	14.7
T2	18.5 (25)	5.1	6.0	5.7	1.700	175U3331	175U3483	175U3484	–	4 (12)	16
T2	22 (30)	3.2	5.0	3.5	2.200	175U3332	175U3080	175U3081	–	6 (10)	24
T2	30 (40)	3.0	3.7	3.5	2.800	175U3333	175U3448	175U3447	–	10 (8)	27
T2	37 (50)	2.4	3.0	2.8	3.200	175U3334	175U3086	175U3087	–	16 (6)	32

12.2.9.8 Order Numbers for Brake Resistors FC 302, T2, Vertical Braking 40% Duty Cycle

Table 143: Ordering Numbers for Brake Resistors, T2, Vertical Braking 40% Duty Cycle

FC 302				Vertical braking 40% duty cycle							
Drive data				Brake resistor data						Installation	
						Danfoss part numbers					
Mains type	P_m [kW]	R_{min} [Ω]	$R_{br.nom}$ [Ω]	R_{rec} [Ω]	$P_{br.cont}$ [kW]	Wire IP54	Screw terminal IP65	Screw terminal IP20	Bolt connection IP20	Cable cross-section [mm² (AWG)]	Thermo relay [A]
T2	0.25 (0.34)	380	475.3	410	0.100	175U3004	–	–	–	1.5 (16)	0.5
T2	0.37 (0.50)	275	320.8	300	0.200	175U3096	–	–	–	1.5 (16)	0.8
T2	0.55 (0.75)	188	215.7	200	0.200	175U3008	–	–	–	1.5 (16)	0.9
T2	0.75 (1.0)	130	158.1	145	0.300	175U3300	–	–	–	1.5 (16)	1.3
T2	1.1 (1.5)	81	105.1	100	0.450	175U3301	175U3402	175U3401	–	1.5 (16)	2.0
T2	1.5 (2.0)	58.5	76	70	0.570	175U3302	175U3404	175U3403	–	1.5 (16)	2.7

FC 302				Vertical braking 40% duty cycle							
T2	2.2 (3.0)	45	51	48	0.960	175U3303	175R3406	175U3405	–	1.5 (16)	4.2
T2	3.0 (4.0)	31.5	37	35	1.130	175U3304	175U3408	175U3407	–	1.5 (16)	5.4
T2	3.7 (5.0)	22.5	29.7	27	1.400	175U3305	175U3410	175U3409	–	1.5 (16)	6.8
T2	5.5 (7.5)	17.7	19.7	18	2.200	175U3306	175U3412	175U3411	–	1.5 (16)	10.4
T2	7.5 (10)	12.6	14.3	13	3.200	175U3307	175U3414	175U3413	–	2.5 (14)	14.7
T2	11 (15)	8.7	9.7	9.0	5.500	–	175U3176	175U3177	–	4 (12)	23
T2	15 (20)	5.3	7.5	5.7	6.000	–	–	–	175U3233	10 (8)	33
T2	18.5 (25)	5.1	6.0	5.7	8.000	–	–	–	175U3234	10 (8)	38
T2	22 (30)	3.2	5.0	3.5	9.000	–	–	–	175U3235	16 (6)	51
T2	30 (40)	3.0	3.7	3.5	14.000	–	–	–	175U3224	25 (4)	63
T2	37 (50)	2.4	3.0	2.8	17.000	–	–	–	175U3227	35 (2)	78

12.2.9.9 Order Numbers for Brake Resistors FC 302, T2, Flat-pack for Horizontal Conveyors

Table 144: Flat-pack IP65 Brake Resistors for Horizontal Conveyors, FC 302 T2, 200–240 V

			Flat-pack IP65 for horizontal conveyors			
FC 302 T2	**P_m [kW]**	**R_{min} [Ω]**	**$R_{br,nom}$ [Ω]**	**R_{rec} per item [Ω/W]**	**Duty cycle [%]**	**Ordering number**
PK25	0.25	380	475	430/100	40	175U1002
PK37	0.37	275	321	330/100 or 310/200	27 or 55	175U1003 or 175U0984
PK55	0.55	188	216	220/100 or 210/200	20 or 37	175U1004 or 175U0987
PK75	0.75	130	158	150/100 or 150/200	14 or 27	175U1005 or 175U0989
P1K1	1.1	81	105.1	100/100 or 100/200	10 or 19	175U1006 or 175U0991
P1K5	1.5	58.5	76	72/200	14	175U0992
P2K2	2.2	45	51	50/200	10	175U0993
P3K0	3.0	31.5	37	35/200 or 72/200	7 or 14	175U0994 or 2 x 175U0992
P3K7	3.7	22.5	29.7	60/200	11	2 x 175U0996

12.2.9.10 Order Numbers for Brake Resistors FC 302, T5, Horizontal Braking 10% Duty Cycle

Table 145: Ordering Numbers for Brake Resistors, T5, Horizontal Braking 10% Duty Cycle

FC 302				Horizontal braking 10% duty cycle							
Drive data				Brake resistor data						Installation	
						Danfoss part numbers					
Mains type	P_m [kW]	R_{min} [Ω]	$R_{br.nom}$ [Ω]	R_{rec} [Ω]	$P_{br.cont}$ [kW]	Wire IP54	Screw terminal IP65	Screw terminal IP20	Bolt connection IP20	Cable cross-section [mm² (AWG)]	Thermo relay [A]
T5	0.37 (0.50)	1000	1389.2	1200	0.100	175U3000	–	–	–	1.5 (16)	0.3
T5	0.55 (0.75)	620	928.8	850	0.100	175U3001	–	–	–	1.5 (16)	0.4
T5	0.75 (1.0)	558	678.3	630	0.100	175U3302	–	–	–	1.5 (16)	0.4
T5	1.1 (1.5)	382	452.5	410	0.100	175U3304	–	–	–	1.5 (16)	0.5
T5	1.5 (2.0)	260	325.9	270	0.200	175U3307	–	–	–	1.5 (16)	0.8
T5	2.2 (3.0)	189	218.6	200	0.200	175U3308	–	–	–	1.5 (16)	0.9
T5	3.0 (4.0)	135	158.5	145	0.300	175U3300	–	–	–	1.5 (16)	1.3
T5	4.0 (5.5)	99	117.2	110	0.450	175U3335	175U3450	175U3449	–	1.5 (16)	1.9
T5	5.5 (7.5)	72	84.4	80	0.570	175U3336	175U3452	175U3451	–	1.5 (16)	2.5
T5	7.5 (10)	50	61.4	56	0.680	175U3337	175U3027	175U3028	–	1.5 (16)	3.3
T5	11 (15)	36	41.2	38	1.130	175U3338	175U3034	175U3035	–	1.5 (16)	5.2
T5	15 (20)	27	30	28	1.400	175U3339	175U3039	175U3040	–	1.5 (16)	6.7
T5	18.5 (25)	20.3	24.2	22	1.700	175U3340	175U3047	175U3048	–	1.5 (16)	8.3
T5	22 (30)	18	20.3	19	2.200	175U3357	175U3049	175U3050	–	1.5 (16)	10.1
T5	30 (40)	13.4	15.8	14	2.800	175U3341	175U3055	175U3056	–	2.5 (14)	13.3
T5	37 (50)	10.8	12.7	12	3.200	175U3359	175U3061	175U3062	–	2.5 (14)	15.3
T5	45 (60)	8.8	10.4	9.5	4.200	–	175U3065	175U3066	–	4 (12)	20

FC 302				Horizontal braking 10% duty cycle							
T5	55 (75)	6.5	8.5	7.0	5.500	–	175U3070	175U3071	–	6 (10)	26
T5	75 (100)	4.2	6.2	5.5	7.000	–	–	–	175U3231	10 (8)	36

12.2.9.11 Order Numbers for Brake Resistors FC 302, T5, Vertical Braking 40% Duty Cycle

Table 146: Ordering Numbers for Brake Resistors, T5, Vertical Braking 40% Duty Cycle

FC 302				Vertical braking 40% duty cycle							
Drive data				Brake resistor data						Installation	
						Danfoss part numbers					
Mains type	P_m [kW]	R_{min} [Ω]	$R_{br.nom}$ [Ω]	R_{rec} [Ω]	$P_{br.cont}$ [kW]	Wire IP54	Screw terminal IP65	Screw terminal IP20	Bolt connection IP20	Cable cross-section [mm² (AWG)]	Thermo relay [A]
T5	0.37 (0.50)	1000	1389.2	1200	0.200	175U3001	–	–	–	1.5 (16)	0.4
T5	0.55 (0.75)	620	928.8	850	0.200	175U3308	–	–	–	1.5 (16)	0.5
T5	0.75 (1.0)	558	678.3	630	0.300	175U3309	–	–	–	1.5 (16)	0.7
T5	1.1 (1.5)	382	452.5	410	0.450	175U3310	175U3416	175U3415	–	1.5 (16)	1
T5	1.5 (2.0)	260	325.9	270	0.570	175U3311	175U3418	175U3417	–	1.5 (16)	1.4
T5	2.2 (3.0)	189	218.6	200	0.960	175U3312	175U3420	175U3419	–	1.5 (16)	2.1
T5	3.0 (4.0)	135	158.5	145	1.130	175U3313	175U3422	175U3421	–	1.5 (16)	2.7
T5	4.0 (5.5)	99	117.2	110	1.700	175U3314	175U3424	175U3423	–	1.5 (16)	3.7
T5	5.5 (7.5)	72	84.4	80	2.200	175U3315	175U3138	175U3139	–	1.5 (16)	5
T5	7.5 (10)	50	61.4	56	3.200	175U3316	175U3428	175U3427	–	1.5 (16)	7.1
T5	11 (15)	36	41.2	38	5.000	–	–	–	175U3236	1.5 (16)	11.5
T5	15 (20)	27	30	28	6.000	–	–	–	175U3237	2.5 (14)	14.7
T5	18.5 (25)	20.3	24.2	22	8.000	–	–	–	175U3238	4 (12)	19

FC 302				Vertical braking 40% duty cycle							
T5	22 (30)	18	20.3	19	10.000	–	–	–	175U3203	4 (12)	23
T5	30 (40)	13.4	15.8	14	14.000	–	–	–	175U3206	10 (8)	32
T5	37 (50)	10.8	12.7	12	17.000	–	–	–	175U3210	10 (8)	38
T5	45 (60)	8.8	10.4	9.5	21.000	–	–	–	175U3213	16 (6)	47
T5	55 (75)	6.5	8.5	7.0	26.000	–	–	–	175U3216	25 (4)	61
T5	75 (100)	4.2	6.2	5.5	36.000	–	–	–	175U3219	35 (2)	81

12.2.9.12 Order Numbers for Brake Resistors FC 302, T5, Flat-pack for Horizontal Conveyors

Table 147: Flat-pack IP65 Brake Resistors for Horizontal Conveyors, FC 302 T5, 525–600 V

			Flat-pack IP65 for horizontal conveyors			
FC 302 T4	**P_m [kW]**	**R_{min} [Ω]**	**$R_{br,nom}$ [Ω]**	**R_{rec} per item [Ω/W]**	**Duty cycle [%]**	**Ordering number**
PK37	0.37	620	1389	830/100	30	175U1000
PK55	0.55	620	929	830/100	20	175U1000
PK75	0.75	558	678	620/100 or 620/200	14 or 27	175U1001 or 175U0982
P1K1	1.1	382	453	430/100 or 430/200	10 or 20	175U1002 or 175U0983
P1K5	1.5	260	325.9	310/200	14	175U0984
P2K2	2.2	189	218.6	210/200	10	175U0987
P3K0	3.0	135	158.5	150/200 or 300/200	7 or 14	175U0989 or 2 x 175U0985
P4K0	4.0	99	117	240/200	10	2 x 175U0986
P5K5	5.5	72	84	160/200	8	2 x175U0988
P7K5	7.5	50	61	130/200	6	2 x 175U0990
P11K	11	36	41.2	80/240	5	2 x 175U0090
P15K	15	27	30	72/240	4	2 x 175U0091

12.2.9.13 Order Numbers for Brake Resistors FC 302, T6, Horizontal Braking 10% Duty Cycle

Table 148: Ordering Numbers for Brake Resistors, T6, Horizontal Braking 10% Duty Cycle

FC 302				Horizontal braking 10% duty cycle				
Drive data				**Brake resistor data**			**Installation**	
						Danfoss part numbers		

FC 302				Horizontal braking 10% duty cycle							
Mains type	P_m [kW]	R_{min} [Ω]	$R_{br.nom}$ [Ω]	R_{rec} [Ω]	$P_{br.cont}$ [kW]	Wire IP54	Screw terminal IP65	Screw terminal IP20	Bolt connection IP20	Cable cross-section [mm² (AWG)]	Thermo relay [A]
T6	0.75 (1.0)	620	914.2	850	0.100	175U3301	–	–	–	1.5 (16)	0.4
T6	1.1 (1.5)	550	611.3	570	0.100	175U3303	–	–	–	1.5 (16)	0.4
T6	1.5 (2.0)	380	441.9	415	0.200	175U3305	–	–	–	1.5 (16)	0.7
T6	2.2 (3.0)	260	296.4	270	0.200	175U3307	–	–	–	1.5 (16)	0.8
T6	3.0 (4.0)	189	214.8	200	0.300	175U3342	–	–	–	1.5 (16)	1.1
T6	4.0 (5.5)	135	159.2	145	0.450	175U3343	175U3012	175U3013	–	1.5 (16)	1.7
T6	5.5 (7.5)	99	114.5	100	0.570	175U3344	175U3136	175U3137	–	1.5 (16)	2.3
T6	7.5 (10)	69	83.2	72	0.680	175U3345	175U3456	175U3455	–	1.5 (16)	2.9
T6	11 (15)	48.6	56.1	52	1.130	175U3346	175U3458	175U3457	–	1.5 (16)	4.4
T6	15 (20)	35.1	40.8	38	1.400	175U3347	175U3460	175U3459	–	1.5 (16)	5.7
T6	18.5 (25)	27	32.9	31	1.700	175U3348	175U3037	175U3038	–	1.5 (16)	7.0
T6	22 (30)	22.5	27.6	27	2.200	175U3349	175U3043	175U3050	–	1.5 (16)	8.5
T6	30 (40)	17.1	21.4	19	2.800	175U3350	175U3462	175U3044	–	2.5 (14)	11.4
T6	37 (50)	13.5	17.3	14	3.200	175U3358	175U3464	175U3463	–	2.5 (14)	14.2
T6	45 (60)	10.8	14.2	13.5	4.200	–	175U3057	175U3058	–	4 (12)	17
T6	55 (75)	8.8	11.6	11	5.500	–	175U3063	175U3064	–	6 (10)	21
T6	75 (100)	6.6	8.4	7.0	7.000	–	–	–	175U3245	10 (8)	32

12.2.9.14 Order Numbers for Brake Resistors FC 302, T6, Vertical Braking 40% Duty Cycle

Table 149: Ordering Numbers for Brake Resistors, T6, Vertical Braking 40% Duty Cycle

FC 302				Vertical braking 40% duty cycle							
Drive data				Brake resistor data						Installation	
						Danfoss part numbers					
Mains type	P_m [kW]	R_{min} [Ω]	$R_{br.nom}$ [Ω]	R_{rec} [Ω]	$P_{br.cont}$ [kW]	Wire IP54	Screw terminal IP65	Screw terminal IP20	Bolt connection IP20	Cable cross-section [mm² (AWG)]	Thermo relay [A]
T6	0.75 (1.0)	620	914.2	850	0.280	175U3317	175U3104	175U3105	–	1.5 (16)	0.6
T6	1.1 (1.5)	550	611.3	570	0.450	175U3318	175U3430	175U3429	–	1.5 (16)	0.9
T6	1.5 (2.0)	380	441.9	415	0.570	175U3319	175U3432	175U3431	–	1.5 (16)	1.1
T6	2.2 (3.0)	260	296.4	270	0.960	175U3320	175U3434	175U3433	–	1.5 (16)	1.8
T6	3.0 (4.0)	189	214.8	200	1.130	175U3321	175U3436	175U3435	–	1.5 (16)	2.3
T6	4.0 (5.5)	135	159.2	145	1.700	175U3322	175U3126	175U3127	–	1.5 (16)	3.3
T6	5.5 (7.5)	99	114.5	100	2.200	175U3323	175U3438	175U3437	–	1.5 (16)	4.4
T6	7.5 (10)	69	83.2	72	3.200	175U3324	175U3440	175U3439	–	1.5 (16)	6.3
T6	11 (15)	48.6	56.1	52	5.500	–	175U3148	175U3149	–	1.5 (16)	9.7
T6	15 (20)	35.1	40.8	38	6.000	–	–	–	175U3239	2.5 (14)	12.6
T6	18.5 (25)	27	32.9	31	8.000	–	–	–	175U3240	4 (12)	16
T6	22 (30)	22.5	27.6	27	10.000	–	–	–	175U3200	4 (12)	19
T6	30 (40)	17.1	21.4	19	14.000	–	–	–	175U3204	10 (8)	27
T6	37 (50)	13.5	17.3	14	17.000	–	–	–	175U3207	10 (8)	35
T6	45 (60)	10.8	14.2	13.5	21.000	–	–	–	175U3208	16 (6)	40
T6	55 (75)	8.8	11.6	11	26.000	–	–	–	175U3211	25 (4)	49
T6	75 (100)	6.6	8.4	7.0	30.000	–	–	–	175U3241	35 (2)	66

12.2.9.15 Order Numbers for Brake Resistors FC 302, T7, Vertical Braking 40% Duty Cycle

Table 150: Ordering Numbers for Brake Resistors, T7, Vertical Braking 40% Duty Cycle

FC 302				Vertical braking 40% duty cycle							
Drive data				Brake resistor data						Installation	
						Danfoss part numbers					
Mains type	P_m [kW]	R_{min} [Ω]	$R_{br.nom}$ [Ω]	R_{rec} [Ω]	$P_{br.cont}$ [kW]	Wire IP54	Screw terminal IP65	Screw terminal IP20	Bolt connection IP20	Cable cross-section [mm² (AWG)]	Thermo relay [A]
T7	1.1 (1.5)	620	830	630	0.360	–	175U3108	175U3109	–	1.5 (16)	0.8
T7	1.5 (2.0)	513	600	570	0.570	–	175U3110	175U3111	–	1.5 (16)	1.0
T7	2.2 (3.0)	340	403	415	0.790	–	175U3112	175U3113	–	1.5 (16)	1.3
T7	3.0 (4.0)	243	292	270	1.130	–	175U3118	175U3119	–	1.5 (16)	2.0
T7	4.0 (5.5)	180	216	200	1.700	–	175U3122	175U3123	–	1.5 (16)	2.8
T7	5.5 (7.5)	130	156	145	2.200	–	175U3106	175U3107	–	1.5 (16)	3.7
T7	7.5 (10)	94	113	105	3.200	–	175U3132	175U3133	–	1.5 (16)	5.2
T7	11 (15)	69.7	76.2	72	4.200	–	175U3142	175U3143	–	1.5 (16)	7.2
T7	15 (20)	46.8	55.5	52	6.000	–	–	–	175U3242	2.5 (14)	10.8
T7	18.5 (25)	36	44.7	42	8.000	–	–	–	175U3243	2.5 (14)	13.9
T7	22 (30)	29	37.5	31	10.000	–	–	–	175U3244	4 (12)	18
T7	30 (40)	22.5	29.1	27	14.000	–	–	–	175U3201	10 (8)	23
T7	37 (50)	18	23.5	22	17.000	–	–	–	175U3202	10 (8)	28
T7	45 (60)	15.5	19.3	15.5	21.000	–	–	–	175U3205	16 (6)	37
T7	55 (75)	13.5	15.7	13.5	26.000	–	–	–	175U3209	16 (6)	44
T7	75 (100)	8.8	11.5	11	36.000	–	–	–	175U3212	25 (4)	57

12.2.10 Order Numbers for Accessory Bags

Table 151: Order Numbers for Accessory Bags

Accessory bag type	Description	Order number
Accessory bag A1	Accessory bag, enclosure size A1	130B1021
Accessory bag A2/A3	Accessory bag, enclosure sizes A2/A3	130B1022
Accessory bag A5	Accessory bag, enclosure type A5	130B1023
Accessory bag A1–A5	Accessory bag, enclosure sizes A1-A5, brake and load sharing connector	130B0633
Accessory bag B1	Accessory bag, enclosure size B1	130B2060
Accessory bag B2	Accessory bag, enclosure size B2	130B2061
Accessory bag B3	Accessory bag, enclosure size B3	130B0980
Accessory bag B4	Accessory bag, enclosure size B4, 18.5–22 kW	130B1300
Accessory bag B4	Accessory bag, enclosure size B4, 30 kW	130B1301
Accessory bag C1	Accessory bag, enclosure size C1	130B0046
Accessory bag C2	Accessory bag, enclosure size C2	130B0047
Accessory bag C3	Accessory bag, enclosure size C3	130B0981
Accessory bag C4	Accessory bag, enclosure size C4, 55 kW	130B0982
Accessory bag C4	Accessory bag, enclosure size C4, 75 kW	130B0983

Example of the contents of an accessory bag (130B0046)

- Load share warning label
- Eye bolt M10
- 2 relay plugs
- 3-pole spring cage connector
- 6-pole spring cage connector
- Label
- Terminal strap
- 3 cable clamps
- 4 metric screws M4 and M6
- 1 thread forming screw
- 3 cable bearers

12.2.11 Ordering of Harmonic Filters

Harmonic filters are used to reduce mains harmonics. Danfoss offers 2 different harmonic filters:

- VLT® Advanced Harmonic Filter AHF 005 with 5% current distortion.
- VLT® Advanced Harmonic Filter AHF 010 with 10% current distortion.

The filters are cooled by natural convection or with built-in fans. Secure sufficient airflow through the filter during installation to prevent overheating the filter. An airflow of minimum 2 m/s is required through the filter.

12.2.11.1 Order Numbers for Harmonic Filters, 380–415 V, 50 Hz

Table 152: Ordering Numbers for Harmonic Filters, 380–415 V, 50 Hz

Drive values		AHF values				
Power rating [kW] (1)	Input current 380–440 V [A]	Current rating [A]	Ordering numbers (2)		Enclosure type	
			AHF 005 IP20	AHF 010 IP20	AHF 005 IP20	AHF 010 IP20
0.37	1.2	10	130B1229	130B1027	X1-V3 IP20 if	X1-V3 IP20 if
0.55	1.6					
0.75	2.2					
1.1	2.7					
1.5	3.7					
2.2	5.0					
3.0	6.5					
4.0	9.0					
5.5	11.7	14	130B1231	130B1058	X1-V3 IP20 ef	X1-V3 IP20 ef
7.5	14.4					
11	22	22	130B1232	130B1059	X2-V3 IP20 ef	X2-V3 IP20 if
15	29	29	130B1233	130B1089	X2-V3 IP20 ef	X2-V3 IP20 if
18.5	34	34	130B1238	130B1094	X3-V3 IP20 if	X3-V3 IP20 if
22	40	40	130B1239	130B1111	X3-V3 IP20 if	X3-V3 IP20 if
30	55	55	130B1240	130B1176	X3-V3 IP20 if	X3-V3 IP20 if
37	66	66	130B1241	130B1180	X4-V3 IP20 if	X4-V3 IP20 if
45	82	82	130B1247	130B1201	X4-V3 IP20 ef	X4-V3 IP20 ef
55	96	96	130B1248	130B1204	X5-V3 IP20 ef	X5-V3 IP20 ef
75	133	133	130B1249	130B1207	X5-V3 IP20 ef	X5-V3 IP20 ef
90	171	171	130B1250	130B1213	X6-V3 IP20 ef	X6-V3 IP20 if
110	204	204	130B1251	130B1214	X6-V3 IP20 ef	X6-V3 IP20 if
132	251	251	130B1258	130B1215	X7-V3 IP20 if	X7-V3 IP20 if
160	304	304	130B1259	130B1216	X7-V3 IP20 if	X7-V3 IP20 if
–	–	325	130B3152 (3)	130B3136 (3)	X8-V3 IP20 if	X7-V3 IP20 if
200	381	381	130B1260	130B1217	X8-V3 IP20 ef	X7-V3 IP20 if
250	463	480	130B1261	130B1228	X8-V3 IP20 ef	X8-V3 IP20 ef

Drive values		AHF values			
315	590	608	2 x 130B1259	2 x 130B1216	See individual filters
355	647	650	2 x 130B3152	2 x 130B3136	
400	684	685	130B1259 + 130B1260	130B1216 + 130B1217	
450	779	762	2 x 130B1260	2 x 130B1217	
500	857	861	130B1260 + 130B1261	130B1217 + 130B1228	
560	964	960	2 x 130B1261	2 x 130B1228	
630	1090	1140	3 x 130B1260	3 x 130B1217	
710	1227	1240	2 x 130B1260 + 130B1261	2 x 130B1217 + 130B1228	
800	1422	1440	3 x 130B1261	3 x 130B1228	
1000	1675	1720	2 x 130B1260 + 2 x 130B1261	2 x 130B1217 + 2 x 130B1228	

[1] *The power ratings in the selection table are the actual operating power and not necessarily the type code power rating. Changing operating conditions between HO and NO changes the actual operating conditions and the filter selection must reflect actual operating conditions.*

[2] *The fan control system allows extended input voltage range as 200–415 V. The AHFs for 380–415 V/50 Hz mains operation can be operated with 200–240 V mains supply.*

[3] *Filters are used as paralleling for 355 kW drive.*

12.2.11.2 Order Numbers for Harmonic Filters, 380–415 V, 60 Hz

Table 153: Ordering Numbers for Harmonic Filters, 380–415 V, 60 Hz

Drive values		AHF values				
Power rating [kW] (1)	Input current 380-440V [A]	Current rating [A]	Ordering numbers (2)		Enclosure type	
			AHF 005 IP20	AHF 010 IP20	AHF 005 IP20	AHF 010 IP20
0.37	1.2	10	130B2857	130B2262	X1-V3 IP20 if	X1-V3 IP20 if
0.55	1.6					
0.75	2.2					
1.1	2.7					
1.5	3.7					
2.2	5.0					
3.0	6.5					
4.0	9.0					
5.5	11.7	14	130B2858	130B2265	X1-V3 IP20 ef	X1-V3 IP20 ef
7.5	14.4					
11	22	22	130B2859	130B2268	X2-V3 IP20 ef	X2-V3 IP20 if
15	29	29	130B2860	130B2294	X2-V3 IP20 ef	X2-V3 IP20 if
18.5	34	34	130B2861	130B2297	X3-V3 IP20 if	X3-V3 IP20 if

Drive values		AHF values				
22	40	40	130B2862	130B2303	X3-V3 IP20 if	X3-V3 IP20 if
30	55	55	130B2863	130B2445	X3-V3 IP20 if	X3-V3 IP20 if
37	66	66	130B2864	130B2459	X4-V3 IP20 if	X4-V3 IP20 if
45	82	82	130B2865	130B2488	X4-V3 IP20 ef	X4-V3 IP20 ef
55	96	96	130B2866	130B2489	X5-V3 IP20 ef	X5-V3 IP20 ef
75	133	133	130B2867	130B2498	X5-V3 IP20 ef	X5-V3 IP20 ef
90	171	171	130B2868	130B2499	X6-V3 IP20 ef	X6-V3 IP20 if
110	204	204	130B2869	130B2500	X6-V3 IP20 ef	X6-V3 IP20 if
132	251	251	130B2870	130B2700	X7-V3 IP20 if	X7-V3 IP20 if
160	304	304	130B2871	130B2819	X8-V3 IP20 if	X7-V3 IP20 if
–	–	325	130B3156 (3)	130B3154 (3)	X8-V3 IP20 ef	X7-V3 IP20 ef
200	381	381	130B2872	130B2855	X8-V3 IP20 ef	X7-V3 IP20 ef
250	463	480	130B2873	130B2856	X8-V3 IP20 ef	X8-V3 IP20 ef
315	590	608	2 x 130B2871	2 x 130B2819	See individual filters	
355	647	650	2 x 130B3156	2 x 130B3154		
400	684	685	130B2871 + 130B2872	130B2819 + 130B2855		
450	779	762	2 x 130B2872	2 x 130B2855		
500	857	861	130B2872 + 130B2873	130B2855 + 130B2856		
560	964	960	2 x 130B2873	2 x 130B2856		
630	1090	1140	3 x 130B2872	3 x 130B2855		
710	1227	1240	2 x 130B2872 + 130B2873	2 x 130B2855 + 130B2856		
800	1422	1440	3 x 130B2873	3 x 130B2856		
1000	1675	1720	2 x 130B2872 + 2 x 130B2873	2 x 130B2855 + 2 x 130B2856		

[1] *The power ratings in selection table are the actual operating power and not necessarily the type code power rating. Changing operating conditions between HO and NO changes the actual operating conditions and the filter selection must reflect actual operating conditions.*

[2] *The fan control system allows extended input voltage range as 200–415 V. The AHFs for 380–415 V/60 Hz mains operation can be operated with 200–240 V mains supply.*

[3] *Filters are used as paralleling for 355 kW drive.*

12.2.11.3 Order Numbers for Harmonic Filters, 440–480 V, 60 Hz

Table 154: Ordering Numbers for Harmonic Filters, 440–480 V, 60 Hz

Drive values			AHF values					
Power rating		Input current 441-500V [A]	Current rating [A]		Ordering numbers		Enclosure type	
[kW] (1)	[HP] (2)		AHF 005	AHF 010	AHF 005 IP20	AHF 010 IP20	AHF 005 IP20	AHF 010 IP20
0.37	0.50	1.0	10	10	130B1752	130B1482	X1-V3 IP20 if	X1-V3 IP20 if
0.55	0.75	1.4						
0.75	1.0	1.9						
1.1	1.5	2.7						
1.5	2.0	3.1						
2.2	3.0	4.3						
3.0	4.0	5.7						
4.0	5.5	7.4						
5.5	7.5	9.9	14	14	130B1753	130B1483	X1-V3 IP20 ef	X1-V3 IP20 ef
7.5	10	13						
11	15	19	19	19	130B1754	130B1484	X2-V3 IP20 ef	X2-V3 IP20 if
15	20	25	25	25	130B1755	130B1485	X2-V3 IP20 ef	X2-V3 IP20 if
18.5	25	31	31	31	130B1756	130B1486	X3-V3 IP20 if	X3-V3 IP20 if
22	30	36	36	36	130B1757	130B1487	X3-V3 IP20 if	X3-V3 IP20 if
30	40	47	48	48	130B1758	130B1488	X3-V3 IP20 if	X3-V3 IP20 if
37	50	59	60	60	130B1759	130B1491	X4-V3 IP20 if	X4-V3 IP20 if
45	60	73	73	73	130B1760	130B1492	X4-V3 IP20 ef	X4-V3 IP20 ef
55	75	95	95	95	130B1761	130B1493	X5-V3 IP20 ef	X5-V3 IP20 ef
75	100	118	118	118	130B1762	130B1494	X5-V3 IP20 ef	X5-V3 IP20 ef
90	125	154	154	154	130B1763	130B1495	X6-V3 IP20 ef	X6-V3 IP20 if
110	150	183	183	183	130B1764	130B1496	X6-V3 IP20 ef	X6-V3 IP20 if
132	200	231	231	231	130B1765	130B1497	X7-V3 IP20 if	X7-V3 IP20 if
160	250	291	291	291	130B1766	130B1498	X8-V3 IP20 if	X7-V3 IP20 if
200	300	348	355	355	130B1768	130B1499	X8-V3 IP20 ef	X7-V3 IP20 ef
–	–	–	380	380	130B3167 (3)	130B3165 (3)	X8-V3 IP20 ef	X7-V3 IP20 ef
250	350	427	436	436	130B1769	130B1751	X8-V3 IP20 ef	X8-V3 IP20 ef

Drive values			AHF values				
315	450	531	522	522	130B1765 + 130B1766	130B1497 + 130B1498	See individual filters
355	500	580	582	582	2 x 130B1766	2 x 130B1498	
400	550	667	671	671	130B1766 + 130B3167	130B1498 + 130B3165	
450	600	771	710	710	2 x 130B1768	2 x 130B1499	
500	650	759	760	760	2 x 130B3167	2 x 130B3165	
560	750	867	872	872	2 x 130B1769	2 x 130B1751	
630	900	1022	1065	1065	3 x 130B1768	3 x 130B1499	
710	1000	1129	1140	1140	3 x 130B3167	3 x 130B3165	
800	1200	1344	1308	1308	3 x 130B1769	3 x 130B1751	
1000	1350	1490	1582	1582	2 x 130B1768 + 2 x 130B1769	2 x 130B1499 + 2 x 130B1751	

[1] *The power ratings in selection table are the actual operating power and not necessarily the type code power rating. Changing operating conditions between HO and NO changes the actual operating conditions and the filter selection must reflect actual operating conditions.*

[2] *Typical HP shaft output at 460 V.*

[3] *Filters are used as paralleling for 500 kW and 710 kW.*

12.2.11.4 Order Numbers for Harmonic Filters, 600 V, 60 Hz

Table 155: Ordering Numbers for Harmonic Filters, 600 V, 60 Hz

Drive values					AHF values					
Power rating			Input current [A]		Current rating at 600 V		Ordering numbers		Enclosure type	
[kW] (1)	T6 [HP] (2)	T7 [HP] (2)	T6 551–600 V	T7 551–600 V	AHF 005 [A]	AHF 010 [A]	AHF 005 IP20	AHF 010 IP20	AHF 005 IP20	AHF 010 IP20
11	15	10	16	15	15	15	130B5246	130B5212	X3-V3 IP20 if	X3-V3 IP20 if
15	20	15	20	19,5	20	20	130B5247	130B5213	X3-V3 IP20 if	X3-V3 IP20 if
18,5	25	20	24	24	24	24	130B5248	130B5214	X3-V3 IP20 ef	X3-V3 IP20 ef
22	30	25	31	29	29	29	130B5249	130B5215	X4-V3 IP20 ef	X4-V3 IP20 ef
30	40	30	37	36	36	36	130B5250	130B5216	X4-V3 IP20 ef	X4-V3 IP20 ef
37	50	40	47	49	50	50	130B5251	130B5217	X5-V3 IP20 ef	X5-V3 IP20 ef

Drive values					AHF values					
45	60	50	56	59	58	58	130B5252	130B5218	X5-V3 IP20 ef	X5-V3 IP20 ef
55	75	60	75	74	77	77	130B5253	130B5219	X6-V3 IP20 ef	X6-V3 IP20 ef
75	100	75	91	85	87	87	130B5254	130B5220	X6-V3 IP20 ef	X6-V3 IP20 ef
90	125	100	119	106	109	109	130B5255	130B5221	X6-V3 IP20 ef	X6-V3 IP20 ef
110	–	125	–	124	128	128	130B5256	130B5222	X6-V3 IP20 ef	X6-V3 IP20 ef
132	–	150	–	151	155	155	130B5257	130B5223	X7-V3 IP20 ef	X7-V3 IP20 ef
160	–	200	–	189	197	197	130B5258	130B5224	X7-V3 IP20 ef	X7-V3 IP20 ef
200	–	250	–	234	240	240	130B5259	130B5225	X8-V3 IP20 ef	X7-V3 IP20 ef
250	–	300	–	286	296	296	130B5260	130B5226	X8-V3 IP20 ef	X8-V3 IP20 ef
315	–	350	–	339	394	366	2 x 130B5258	130B5227		X8-V3 IP20 ef
355	–	400	–	366	394	366	2 x 130B5258	130B5227		X8-V3 IP20 ef
400	–	400	–	395	394	395	2 x 130B5258	130B5228		X8-V3 IP20 ef
500	–	500	–	482	480	480	2 x 130B5259	2 x 130B5225	See individual filters	
560	–	550	–	549	592	592	2 x 130B5260	2 x 130B5226		
630	–	650	–	613	720	732	3 x 130B5259	2 x 130B5227		
710	–	750	–	711	720	732	3 x 130B5259	2 x 130B5227		
800	–	950	–	828	888	888	3 x 130B5260	3 x 139B5226		
900	–	1050	–	920	960	960	4 x 130B5259	3 x 130B5227		
1000	–	1150	–	1032	1184	1098	4 x 130B5260	3 x 130B5227		

[1] *The power ratings in selection table are the actual operating power and not necessarily the type code power rating. Changing operating conditions between HO and NO changes the actual operating conditions and the filter selection must reflect actual operating conditions.*

[2] *Typical HP shaft output at 575 V.*

12.2.11.5 Order Numbers for Harmonic Filters, 500–690 V, 50 Hz

Table 156: Ordering Numbers for Harmonic Filters, 500–690 V, 50 Hz

Drive values				AHF values					
Power rating [kW] (1)	Input current [A]			Current rating at 690 V		Ordering numbers		Enclosure type	
	T6 525–550 V	T7 525–550 V	T7 690 V	AHF 005 [A]	AHF 010 [A]	AHF 005 IP20	AHF 010 IP20	AHF 005 IP20	AHF 010 IP20
11	17.2	15.0	14.5	15	15	130B5088	130B5280	X3-V3 IP20 if	X3-V3 IP20 if
15	20.9	19.5	19.5	20	20	130B5089	130B5281	X3-V3 IP20 if	X3-V3 IP20 if
18.5	25.4	24	24	24	24	130B5090	130B5282	X3-V3 IP20 ef	X3-V3 IP20 ef
22	32.7	29	29	29	29	130B5092	130B5283	X4-V3 IP20 ef	X4-V3 IP20 ef
30	39	36	36	36	36	130B5125	130B5284	X4-V3 IP20 ef	X4-V3 IP20 ef
37	49	49	48	50	50	130B5144	130B5285	X5-V3 IP20 ef	X5-V3 IP20 ef
45	59	59	58	58	58	130B5168	130B5286	X5-V3 IP20 ef	X5-V3 IP20 ef
55	78.9	77	77	77	77	130B5169	130B5287	X6-V3 IP20 ef	X6-V3 IP20 ef
75	95.3	89	87	87	87	130B5170	130B5288	X6-V3 IP20 ef	X6-V3 IP20 ef
90	124.3	110	109	109	109	130B5172	130B5289	X6-V3 IP20 ef	X6-V3 IP20 ef
110	–	130	128	128	128	130B5195	130B5290	X6-V3 IP20 ef	X6-V3 IP20 ef
132	–	158	155	155	155	130B5196	130B5291	X7-V3 IP20 ef	X7-V3 IP20 ef
160	–	198	197	197	197	130B5197	130B5292	X7-V3 IP20 ef	X7-V3 IP20 ef
200	–	245	240	240	240	130B5198	130B5293	X8-V3 IP20 ef	X7-V3 IP20 ef
250	–	299	296	296	296	130B5199	130B5294	X8-V3 IP20 ef	X8-V3 IP20 ef
315	–	355	352	394	366	2 x 130B5197	130B5295		X8-V3 IP20 ef
355	–	381	366	394	395	2 x 130B5197	130B5296		X8-V3 IP20 ef
400	–	413	400	437	437	130B5197 + 130B5198	130B5292 + 130B5293	See individual filters	
500	–	504	482	536	536	130B5198 + 130B5199	130B5293 + 130B5294		
560	–	574	549	592	592	2 x 130B5199	2 x 130B5294		
630	–	642	613	662	662	130B5199 + 2 x 130B5197	130B5294 + 130B5295		
710	–	743	711	788	732	4 x 130B5197	2 x 130B5295		
800	–	866	828	888	888	3 x 130B5199	3 x 130B5294		
900	–	962	920	986	958	2 x 130B5199 + 2 x 130B5197	2 x 130B5294 + 130B5295		

[1] *The power ratings in selection table are the actual operating power and not necessarily the type code power rating. Changing operating conditions between HO and NO changes the actual operating conditions and the filter selection must reflect actual operating conditions.*

12.2.12 Order Numbers for VLT® Sine-wave Filters MCC 101

Table 157: Ordering Numbers for Sine-wave Filters for 200–500 V Drives

Drive power and current ratings						Filter current rating			Switching frequency	Ordering numbers	
200–240 V		380–400 V		441–500 V		50 Hz	60 Hz	100 Hz		IP00	IP20/23 [(1)]
[kW]	[A]	[kW]	[A]	[kW]	[A]	[A]	[A]	[A]	[kHz]		
–	–	0.37	1.3	0.37	1.1	2.5	2.5	2.0	5.0	130B2404	130B2439
0.25	1.8	0.55	1.8	0.55	1.6						
0.37	2.4	0.75	2.4	0.75	2.1						
–	–	1.1	3.0	1.1	3.0	4.5	4.0	3.5	5.0	130B2406	130B2441
0.55	3.5	1.5	4.1	1.5	3.4						
0.75	4.6	2.2	5.6	2.2	4.8	8.0	7.5	5.5	5.0	130B2408	130B2443
1.1	6.6	3.0	7.2	3.0	6.3						
1.5	7.5	–	–	–	–						
–	–	4.0	10	4.0	8.2	10	9.5	7.5	5.0	130B2409	130B2444
2.2	10.6	5.5	13	5.5	11	17	16	13	5.0	130B2411	130B2446
3.0	12.5	7.5	16	7.5	14.5						
3.7	16.7	–	–	–	–						
5.5	24.2	11	24	11	21	24	23	18	4.0	130B2412	130B2447
7.5	30.8	15	32	15	27	38	36	28.5	4.0	130B2413	130B2448
		18.5	37.5	18.5	34						
11	46.2	22	44	22	40	48	45.5	36	4.0	130B2281	130B2307
15	59.4	30	61	30	52	62	59	46.5	3.0	130B2282	130B2308
18.5	74.8	37	73	37	65	75	71	56	3.0	130B2283	130B2309
22	88	45	90	55	80	115	109	86	3.0	130B3179	130B3181*
30	115	55	106	75	105						
37	143	75	147	90	130	180	170	135	3.0	130B3182	130B3183*
45	170	90	177								

[1] *Ordering numbers marked with * are IP23.*

Table 158: Ordering Numbers for Sine-wave Filters for 525–690 V Drives

Drive Power and Current Ratings			Filter current rating			Switching frequency	Ordering numbers	
525–600 V	690 V	525–550 V	50 Hz	60 Hz	100 Hz		IP00	IP20/23 [(1)]

Drive Power and Current Ratings						Filter current rating			Switching frequency	Ordering numbers	
[kW]	[A]	[kW]	[A]	[kW]	[A]	[A]	[A]	[A]	[kHz]		
0.75	1.7	1.1	1.6	–	–	4.5	4.0	3.0	4.0	130B7335	130B7356
1.1	2.4	1.5	2.2								
1.5	2.7	2.2	3.2								
2.2	3.9	3.0	4.5								
3.0	4.9	4.0	5.5	–	–	10	9.0	7.0	4.0	130B7289	130B7324
4.0	6.1	5.5	7.5								
5.5	9.0	7.5	10								
7.5	11	11	13	7.5	14	13	12	9.0	3.0	130B3195	130B3196
11	18	15	18	11	19	28	26	21	3.0	130B4112	130B4113
15	22	18.5	22	15	23						
18.5	27	22	27	18	28						
22	34	30	34	22	36	45	42	33	3.0	130B4114	130B34115
30	41	37	41	30	48						
37	52	45	52	37	54	76	72	57	3.0	130B4116	130B4117*
45	62	55	62	45	65						
55	83	75	83	55	87	115	109	86	3.0	130B4118	130B4119*
75	100	90	100	75	105						
90	131	–	–	90	137	165	156	124	2.0	130B4121	130B4124*

[1] *Ordering numbers marked with * are IP23.*

12.2.13 Order Numbers for VLT® dU/dt Filters MCC 102

Table 159: Ordering Numbers for dU/dt Filters for 200–500 V Drives

Drive ratings [V]						Filter current rating [V]		Order number		
200–240		380–440		441–500		380@60 Hz, 200–400/440@50 Hz	460/480@60 Hz, 500/525@50 Hz	IP00	IP20	IP54
[kW]	[A]	[kW]	[A]	[kW]	[A]	[A]	[A]			
3.0	12.5	5.5	13	5.5	11	17	15	N/A	130B7367 (1)	N/A
3.7	16	7.5	16	7.5	14.5					
–	–	–	–	–	–					
5.5	24.2	11	24	11	21	44	40	130B2835	130B2836	130B2837
7.5	30.8	15	32	15	27					
–	–	18.5	37.5	18.5	34					
–	–	22	44	22	40					

Drive ratings [V]						Filter current rating [V]		Order number		
11	46.2	30	61	30	52	90	80	130B2838	130B2839	130B2840
15	59.4	37	73	37	65					
18.5	74.8	45	90	55	80					
22	88	–	–	–	–					
–	–	55	106	75	105	106	105	130B2841	130B2842	130B2843
–	–	55	106	75	105					
30	115	75	147	90	130	177	160	130B2844	130B2845	130B2846
37	143	90	177	–	–					
45	170	–	–	–	–					

[1] *Dedicated A3 enclosures supporting footprint mounting and book style mounting. Fixed shielded cable connection to the drive.*

Table 160: Ordering Numbers for dU/dt Filters for 525–690 V Drives

Drive ratings [V]				Filter current rating [V]			Order number		
525–550		551–690		460/480@60 Hz, 500/525@50 Hz	575/600@60 Hz	690@50 Hz	IP00	IP20	IP54
[kW]	[A]	[kW]	[A]	[A]	[A]	[A]			
5.5	9.5	1.1	1.6	15	13	10	N/A	130B7367 (1)	N/A
7.5	11.5	1.5	2.2						
–	–	2.2	3.2						
		3.0	4.5						
		4.0	5.5						
		5.5	7.5						
		7.5	10						
7.5	14	11	13	40	32	27	130B2835	130B2836	130B2837
11	19	15	18						
15	23	18.5	22						
18.5	28	22	27						
30	43	30	34	80	58	54	130B2838	130B2839	130B2840
37	54	37	41						
45	65	45	52						
–	–	–	–						
55	87	55	62	105	94	86	130B2841	130B2842	130B2843
55	87	75	83						

Drive ratings [V]				Filter current rating [V]			Order number		
75	113	90	108	160	131	108	130B2844	130B2845	130B2846
90	137	–	–						
–	–	–	–						

[1] *Dedicated A3 enclosures supporting footprint mounting and book style mounting. Fixed shielded cable connection to the drive.*

12.2.14 Order Numbers for VLT® Common-mode Filters MCC 105

Table 161: Order Numbers and Dimensions for Common-mode Filters

Enclosure size	Order number	Core dimensions (mm [in])					Weight [kg (lbs)]
		W	w	H	h	d	
A and B	130B3257	60 (2.36)	43 (1.7)	40 (1.57)	25 (0.98)	22.3 (0.88)	0.25 (0.55)
C1	130B7679	82.8 (3.25)	57.5 (2.26)	45.5 (1.79)	20.6 (0.81)	33 (0.30)	
C2, C3, C4	130B3258	102 (4.0)	69 (2.71)	61 (2.4)	28 (1.1)	37 (1.46)	1.6 (3.52)
D	130B3259	189 (7.44)	143 (5.63)	126 (4.96)	80 (3.15)	37 (1.46)	2.45 (5.4)

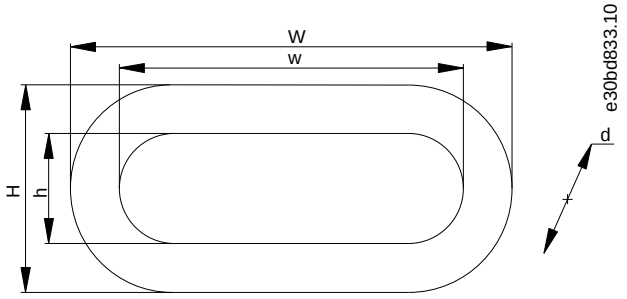

Illustration 155: HF-CM Core, Dimensions

12.2.15 Spare Parts

Visit the VLT® Shop or the configurator for ordering spare parts available for a specific application on VLTshop.danfoss.com.

13 Appendix

13.1 Symbols and Abbreviations

60° AVM	Pulse width modulation
°C	Degrees Celsius
°F	Degrees Fahrenheit
AC	Alternating current
AEO	Automatic energy optimization
AWG	American wire gauge
AMA	Automatic motor adaptation
BDM	Basic drive module
CBM	Condition-based monitoring
CDM	Complete drive module
DC	Direct current
EMC	Electro-magnetic compatibility
ETR	Electronic thermal relay
$f_{M,N}$	Nominal motor frequency
I_{INV}	Rated inverter output current
I_{LIM}	Current limit
$I_{M,N}$	Nominal motor current
$I_{VLT,MAX}$	Maximum output current
$I_{VLT,N}$	Rated output current supplied by the drive
IMC	Integrated motion controller
IP	Ingress protection
LCP	Local control panel
MCT	Motion control tool
n_s	Synchronous motor speed
$P_{M,N}$	Nominal motor power
PDS	Power drive system
PELV	Protective extra low voltage
PCB	Printed circuit board

PM motor	Permanent magnet motor
PWM	Pulse width modulation
RPM	Revolutions per minute
Regen	Regenerative terminals
SFAVM	Stator frequency asynchron vector modulation
T_{LIM}	Torque limit
TAS	Temperature-adaptive switching frequency function
$U_{M,N}$	Nominal motor voltage

Index

+

+10 V DC output ... 114

2

24 V back-up supply ... 223
24 V DC output ... 114

A

Abbreviations ... 253
AC brake ... 69
Acoustic noise in motor ... 31
Ambient conditions
  Specifications ... 110
Analog input ... 112, 161, 161
Analog output ... 113, 161, 161
Approvals ... 15
Approvals and certifications ... 17
ATEX ... 63, 174
Automatic energy optimization (AEO) ... 60
Automatic motor adaptation (AMA)
  Overview ... 62
Automatic switching frequency modulation ... 61

B

Bearing current ... 31
Brake
  Brake resistor overview ... 69
  Control with brake function ... 179
  Dynamic braking overview ... 68
  Overvoltage control (OVC) ... 179
Brake Resistor ... 80
Braking
  Closed-loop control ... 70

C

Cable length, control cables ... 111
Cable specifications ... 111
Cables
  Leakage current ... 180
  Shielded control cables ... 158
  Twisted-pair cables ... 158
Calculations
  Harmonic software ... 205
  Short-circuit ratio ... 202
  THDi ... 201
Capacitor storage ... 122
CDM ... 24
  See Complete Drive Module
CE mark ... 15
Certifications ... 15
Circuit breaker ... 162, 182
Commercial environment ... 193
Common mode filter filter ... 80
Comparators ... 68
Complete Drive Module ... 24
Compliance
  Functional safety ... 42
Conformal coating ... 122
Control
  Closed-loop with mechanical brake ... 70
  Motion control order numbers ... 223
  Terminals ... 62
Control card ... 114, 114, 114, 114
Control card performance ... 115
Control characteristics ... 115
Conventions ... 13
Conveyors ... 46
Cranes ... 46
Cross-section, control cable ... 111
Current
  Distortion ... 201
  Fundamental current ... 201
  Harmonic current ... 201
  Leakage current ... 180
  Minimizing bearing and shaft currents ... 176
  Transient ground ... 182

D

DC
  Brake ... 69
Derating for low air pressure ... 130
Design guide ... 110
Digital input ... 111, 161
Digital output ... 113, 161
Dimensions, enclosure size A ... 117
Dimensions, enclosure size B ... 118

Dimensions, enclosure sizes C and D 119
Directives 15, 18
dU/dt filter 80

E

Earth leakage circuit breaker 182
See Residual current device
Efficiency
Using AMA 62
Efficiency class 32
Electromagnetic interference 61
Electronic thermal overvoltage 62
EMC
Directive 16
Emission requirements 193
EN 60664-1 115
EN 61800-3 110
EN/IEC 61800-5-2 17
EN60664-1 109
Enclosure protection 18
Encoder input 112
Energy efficiency class 110
Environment 110
ErP directive 16
EX-d motor 63
Ex-e motor 63
EX-n motor 63
Export control regulation 18

F

Fans
Temperature-controlled fans 61
Fieldbus 222
Fieldbus options 77
Flux sensorless control structure 216
Fourier series analysis 200
Frequency
Bypass 66
Front cover tightening torque, enclosure size A 118
Front cover tightening torque, enclosure size B 119
Front cover tightening torque, enclosure sizes C and D 120
Functional extensions 222
Fuse 162

G

Galvanic isolation 62
Gases 122
Ground
Installation considerations 147
Leakage current 182
Leakage current hazard 147
Loops 158

H

Harmonic filter 79
Harmonics
Calculation 205
EN standards 202
IEC standards 202

I

IEC 60068-2-43 110
IEC 60364 162
IEC 61800-3 110
IEC 721-3-3 110
IES 24
See International Efficiency for Systems
Immunity requirements 194
Installation
Qualified personnel 14
International Efficiency for Systems 24
IP rating 18
IP21/Nema 1 Kit 82

L

Language packages 221
Leakage current 180
Line reactor 205
Line Reactors 81
Load envelope monitoring 51
Logic rules 68
Low voltage directive 16

M

Mains
Drop-out 65
Fluctuations 61
Maintenance 50, 126
MCB 159 43
Mechanical brake

Using closed-loop control ... 70
Modulation ... 61
Monitoring ... 50
Moroccan conformity mark ... 18
Motion control ... 223
Motor
Full torque ... 65
Leakage current ... 180
Limiting power ... 47
Minimizing bearing and shaft currents ... 176
Missing phase detection ... 53
Themal protection ... 62
Thermal protection ... 174
Motor cable ... 80, 116
Motor insulation, protection of ... 31
Motor output ... 109
Mounting brackets ... 86

N

NEC 2009 ... 162
NEMA protection rating ... 18
Noise in motor cables ... 31

O

Options
Fieldbus ... 77
Functional extensions ... 78
Order numbers for option A ... 222
Order numbers for option B ... 222
Order numbers for option C ... 223
Order numbers for option D ... 223
Ordering
24 V back-up suppy ... 223
Fieldbus options ... 222
Functional extension options ... 222
Motion control and relay card options ... 223
Overload
Electronic thermal overvoltage ... 62
Issues with harmonics ... 200
Overvoltage
Alternative brake function ... 179
Limits ... 54

P

Panel mounting kit for LCP ... 89
Panel through mounting kit ... 81
PDS ... 24
See Power Drive Systems
PELV ... 62
Periodic forming ... 122
PID
Controller ... 65
Point of common coupling ... 201
Power Drive Systems ... 24
Power rating, enclosure size B ... 118
Power ratings, enclosure size A ... 117
Power ratings, enclosure sizes C and D ... 119
Process PID control ... 212
PROFIsafe ... 43, 45
Programmable Controllers ... 78
Protection
Brake function ... 53
Motor thermal ... 62
Overload ... 53, 54
Rating ... 18
Short circuit ... 52
Protection of motor insulation ... 31
Pulse
Automatic switching frequency modulation ... 61
Pulse input ... 112
Purpose of the manual ... 12

Q

Qualified personnel ... 14

R

Radio equipment directive ... 16
Radio frequency interference ... 61
Reduce acoustic noise in motor ... 31
Reduce noise in motor cables ... 31
Reference
Limits ... 209
Relay
Extended relay card ... 223
Terminals ... 62
Relay output ... 114
Remote mounting kits for LCP ... 88
Residential environment ... 193
Residual current device ... 180, 182
Resistor brake ... 69
See Brake resistor

Resonance damping ... 61
Restart ... 65
Rotor ... 54
RS485 serial communication ... 114

S

Safe maximum speed (SMS) function ... 44
Safe stop 1 (SS1) function ... 44
Safe torque off
  Machinery directive compliance ... 16
  Overview ... 43, 68
Safely limited speed (SLS) function ... 44
Safety
  Options ... 42
Safety options ... 42, 43
Sensorless safety ... 43
Serial communication ... 158, 161, 162
Service log
  Alarms ... 49
  Overview ... 49
Shaft voltage ... 31
Shielded control cable ... 158
Short circuit
  Protection ... 52
  Ratio ... 201
  Ratio calculation ... 202
Sine-wave ... 80
Sine-wave filter ... 79
Smart logic control ... 66
Speed PID ... 215
Standards
  EN 60079-7 ... 63
  IEC 60034-30-1 ... 32
  IEC 60364 ... 52
  NEC 2009 ... 52
STO ... 111, 143
Storage ... 122
Supply voltage ... 109, 161, 161
Switching frequency ... 80, 182
Symbols ... 14, 253

T

Thermal protection ... 174
Thermal Protection for Ex-e or Ex-n Motors ... 63
Torque
  Sharing ... 46
Torque characteristics ... 110
Transformer ... 201
TÜV ... 17

U

UL
  Enclosure protection rating ... 18
USB serial communication ... 114
Use of EMC-correct cables ... 147

V

Vibration
  Monitoring ... 50
Voltage level ... 111
VVC+ ... 215

W

Weight, enclosure size A ... 117
Weight, enclosure size B ... 118
Weight, enclosure sizes C and D ... 119
Winding condition monitoring ... 50
Wireless LCP ... 91
Wiring schematic ... 143

VLT Drives Glossary

6

60° AVM 60° asynchronous vector modulation (parameter 14-00 Switching Pattern).

A

Analog reference A signal transmitted to the analog inputs 53 or 54 (voltage or current).

Analog inputs The analog inputs are used for controlling various functions of the drive. There are 2 types of analog inputs: Current input, 0–20 mA, and 4–20 mA Voltage input, -10 V DC to +10 V DC.

Analog outputs The analog outputs can supply a signal of 0–20 mA, 4–20 mA.

Automatic motor adaptation, AMA AMA algorithm determines the electrical parameters for the connected motor at standstill.

Actual position The actual position from an encoder, or a value that the motor control calculates in open loop. The drive uses the actual position as feedback for position PI.

B

Break-away torque

Binary reference A signal transmitted to the serial communication port.

Brake resistor The brake resistor is a module capable of absorbing the brake power generated in regenerative braking. This regenerative brake power increases the DC-link voltage and a brake chopper ensures that the power is transmitted to the brake resistor.

BDM A BDM is a drive module, which consists of a power converter module and a control and regulating device for speed, torque, current, or voltage.

C

Control command Start and stop the connected motor with LCP and digital inputs. Functions are divided into 2 groups. Functions in group 1 have higher priority than functions in group 2. Group 1Reset, coast stop, reset and coast stop, quick stop, DC brake, stop, the [OFF] key.Group 2Start, pulse start, reversing, start reversing, jog, freeze output.

CT characteristics Constant-torque characteristics used for all applications such as conveyor belts, displacement pumps, and cranes.

Commanded position The actual position reference calculated by the profile generator. The drive uses the commanded position as setpoint for position PI.

CDM A CDM is a drive system without the motor and without the measuring sensors, which are mechanically connected to the motor shaft. The drive system consists of, but is not restricted to, the BDM and extensions, such as the feed module and auxiliary equipment.

CBM	Condition Based Monitoring monitors the machine condition and performance when the drive is in service and detects mechanical, motor, or application failures in advance. Corrective actions can be performed before the process or application is impacted.

D

Digital inputs	The digital inputs can be used for controlling various functions of the drive.
Digital outputs	The drive features 2 solid-state outputs that can supply a 24 V DC (maximum 40 mA) signal.
DSP	Digital signal processor.

E

ETR	Electronic thermal relay is a thermal load calculation based on present load and time. Its purpose is to estimate the motor temperature.

F

f_{jog}	Motor frequency when the jog function is activated (via digital terminals).
f_M	Motor frequency.
f_{MAX}	Maximum motor frequency.
f_{MIN}	Minimum motor frequency.
$f_{M,N}$	Rated motor frequency (nameplate data).
FC standard bus	Includes RS485 bus with FC protocol or MC protocol. See parameter 8-30 Protocol.

H

Hiperface®	Hiperface is a registered trademark by Stegmann.

I

$I_{VLT,MAX}$	Maximum output current.
$I_{VLT,N}$	Rated output current supplied by the drive.
I_M	Motor current (actual).
$I_{M,N}$	Rated motor current (nameplate data).
Initializing	If initializing is carried out parameter 14-22 Operation Mode, the drive returns to the default setting.
Intermittent duty cycle	An intermittent duty rating refers to a sequence of duty cycles. Each cycle consists of an on-load and an off-load period. The operation can be either periodic duty or non-periodic duty.
IMC	Integrated Motion Controller (IMC) is a functionality that enables an AC drive to perform high-precision positioning and synchronization operations without the need for additional modules or hardware.

L

LCP The local control panel makes up a complete interface for control and programming of the drive. The control panel is detachable and can be installed up to 3 m (10 ft) from the drive, that is, in a front panel with the installation kit option.

lsb Least significant bit.

M

Motor running Torque generated on output shaft and speed from 0 RPM to maximum speed on motor.

msb Most significant bit.

MCM Short for "mille circular mil", an American measuring unit for cable cross-section. 1 MCM=0.5067 mm2

N

$n_{M,N}$ Nominal motor speed (nameplate data).

n_s Synchronous motor speed.

n_{slip} Motor slip.

NLCP Numerical local control panel interface for control and programming of the drive. The display is numerical and the panel is used to show process values. The NLCP has no storage and copy functions.

O

Online/offline parameters Changes to online parameters are activated immediately after the data value is changed. Press [OK] to activate changes to off-line parameters.

P

$P_{M,N}$ Rated motor power (nameplate data in kW or hp).

Preset reference A defined preset reference to be set from -100% to +100% of the reference range. Selection of 8 preset references via the digital terminals.

Pulse reference A pulse frequency signal transmitted to the digital inputs (terminal 29 or 33).

Process PID The PID control maintains the required speed, pressure, temperature, and so on, by adjusting the output frequency to match the varying load.

PCD Process-control data.

Power cycle Switch off the mains until the display (LCP) is dark, then turn power on again.

Pulse input/incremental encoder An external, digital pulse transmitter used for feeding back information on motor speed. The encoder is used in applications where great accuracy in speed control is required.

Power factor The power factor is the relation between I1 and IRMS. The power factor for 3-phase control: The power factor indicates to which extent the drive impo-

ses a load on the mains supply. The lower the power factor, the higher the IRMS for the same kW performance. In addition, a high-power factor indicates that the different harmonic currents are low. The DC coils in the drive produce a high-power factor, which minimizes the imposed load on the mains supply.

Position error Position error is the difference between the actual position and the commanded position. The position error is the input for the position PI controller.

Position unit The physical unit for position values.

PDS The PDS is a speed control system for an electric motor, including the CDM and motor, but without the equipment which it powers.

R

Ref_{MAX} Determines the relationship between the reference input at 100-% full scale value (typically 10 V, 20 mA) and the resulting reference. The maximum reference value is set in parameter 3-03 Maximum Reference.

Ref_{MIN} Determines the relationship between the reference input at 0-% value (typically 0 V, 0 mA, 4 mA) and the resulting reference. The minimum reference value is set in parameter 3-02 Minimum Reference.

RCD Residual-current device.

S

Start-disable command A stop command belonging to Group 1 control commands, see VLT Drives Glossary > #X003297 > simpletable_ash_3nj_pdb.

Stop command A stop command belonging to Group 1 control commands, see VLT Drives Glossary > #X003297 > simpletable_ash_3nj_pdb.

Set-up Save parameter settings in 4 set-ups. Change between the 4 parameter set-ups and edit 1 set-up, while another set-up is active.

SFAVM Switching pattern called stator flux-oriented asynchronous vector modulation (parameter 14-00 Switching Pattern).

Slip compensation The drive compensates for the motor slip by giving the frequency a supplement that follows the measured motor load keeping the motor speed almost constant.

SLC The SLC (smart logic control) is a sequence of user-defined actions executed when the associated user-defined events are evaluated as true by the SLC. (See parameter group 13-** Smart Logic Control).

STW Status word.

T

$T_{M,N}$ Rated torque (motor).

THD Total harmonic distortion states the total contribution of harmonic.

Thermistor A temperature-dependent resistor placed on the drive or the motor.

Trip
A state entered in fault situations, for example, if the drive is subject to an overtemperature or when the drive is protecting the motor, process, or mechanism. The drive prevents a restart until the cause of the fault has disappeared. To cancel the trip state, restart the drive. Do not use the trip state for personal safety.

Trip lock
The drive enters this state in fault situations to protect itself. The drive requires physical intervention, for example when there is a short circuit on the output. A trip lock can only be canceled by disconnecting mains, removing the cause of the fault, and reconnecting the drive. Restart is prevented until the trip state is canceled by activating reset or, sometimes, by being programmed to reset automatically. Do not use the trip lock state for personal safety.

Target position
The final target position specified by positioning commands. The profile generator uses this position to calculate the speed profile.

U

$U_{VLT,MAX}$
Maximum output voltage.

U_M
Instant motor voltage.

$U_{M,N}$
Rated motor voltage (nameplate data).

V

VT characteristics
Variable torque characteristics used for pumps and fans.

VVC+
If compared with standard voltage/frequency ratio control, Voltage Vector Control (VVC+) improves the dynamics and the stability, both when the speed reference is changed and in relation to the load torque.

H

η_{VLT}
The efficiency of the drive is defined as the ratio between the power output and the power input.

ENGINEERING
TOMORROW

Danfoss can accept no responsibility for possible errors in catalogues, brochures and other printed material. Danfoss reserves the right to alter its products without notice. This also applies to products already on order provided that such alterations can be made without subsequential changes being necessary in specifications already agreed. All trademarks in this material are property of the respective companies. Danfoss and the Danfoss logotype are trademarks of Danfoss A/S. All rights reserved.

Danfoss A/S
Ulsnaes 1
DK-6300 Graasten
vlt-drives.danfoss.com