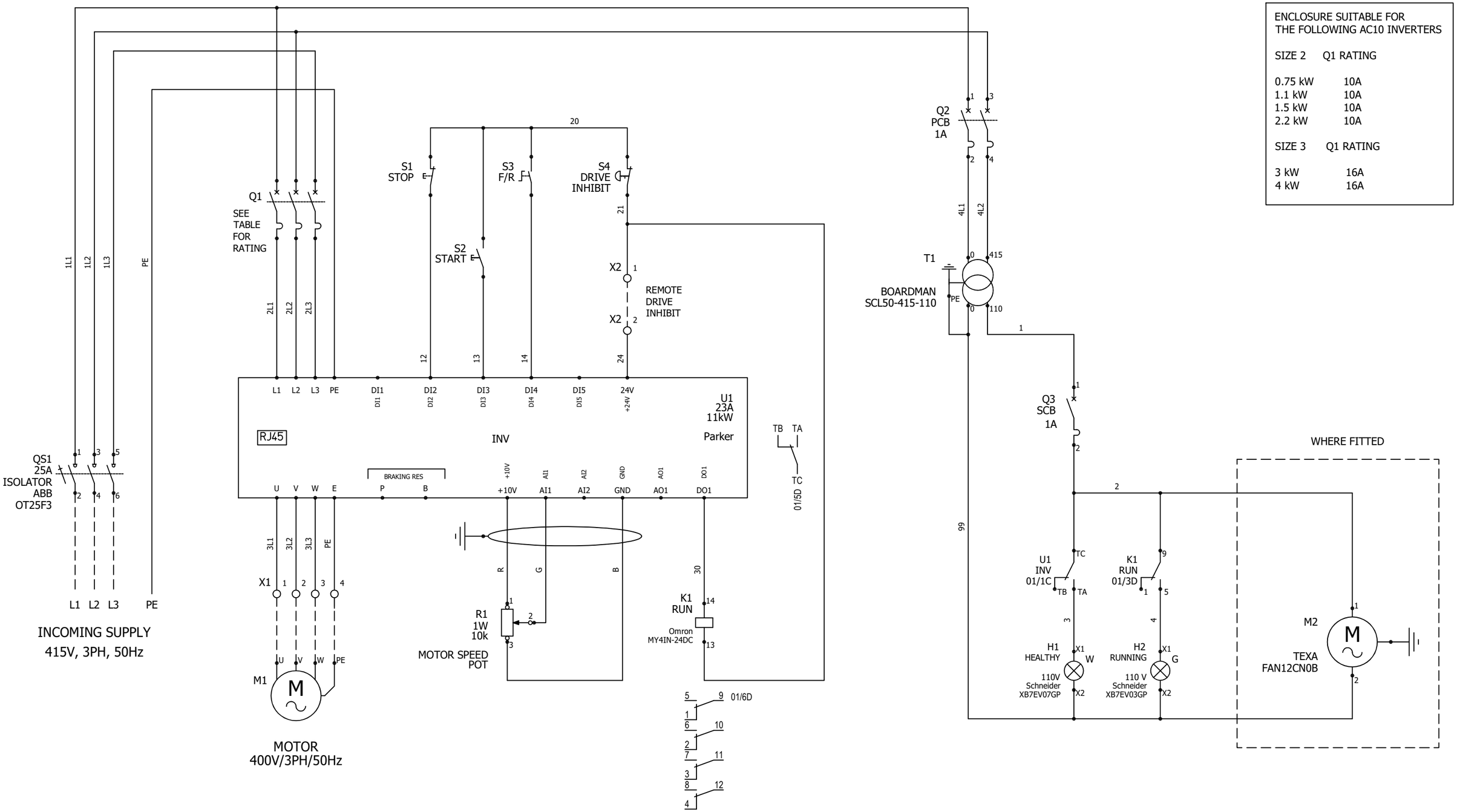

A	06/12/2018	MJW	Draft		REVISION A
REV.	DATE	NAME	CHANGES		SCHEME 01

Schematic Diagram
For Enclosed
Inverter
AC10 Size 2 & 3

Drawing Title 2

IDS-AC10-S2/3

LOCATION: L1

Inverter & Control Circuit

Drawing Created with elecworks version : 2019.0.1.19

FRAME 2 & FRAME 3

0.75kW
1.1kW
1.5kW
2.2kW
3kW
4kW

FRONT VIEW

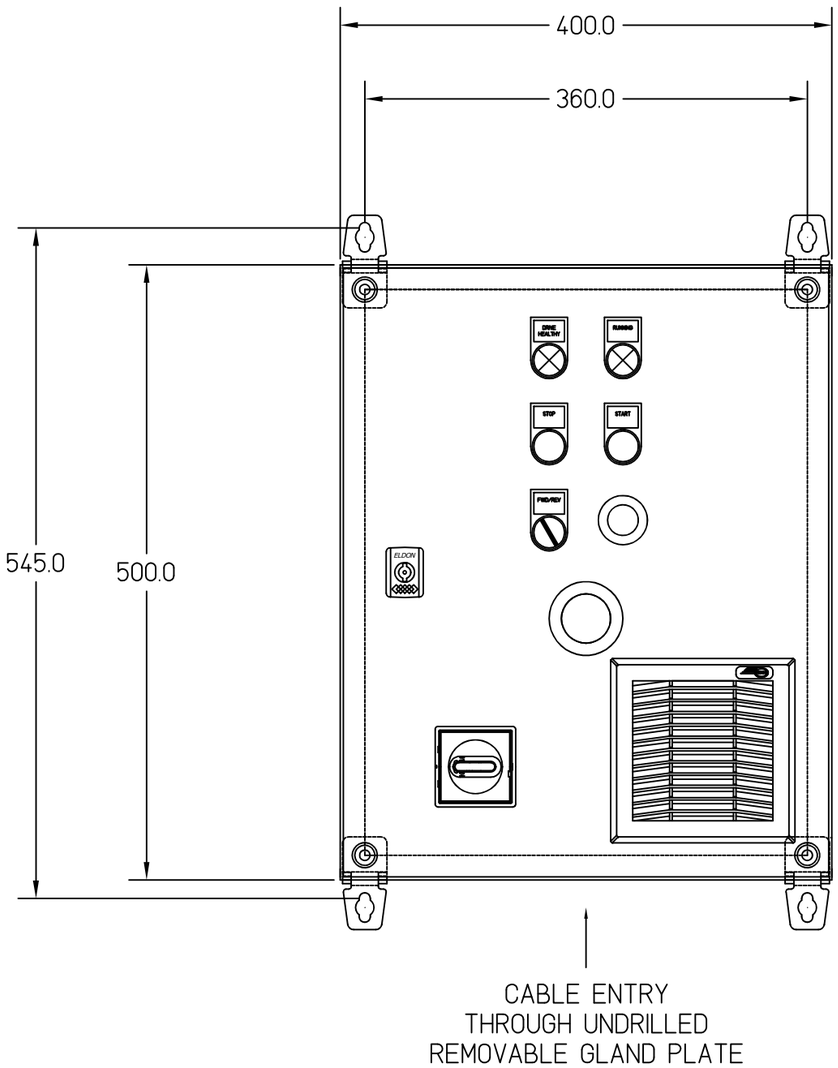

INTERNAL VIEW

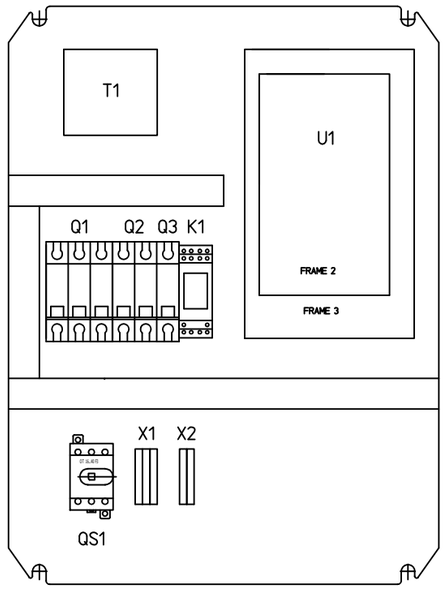

SIDE VIEW

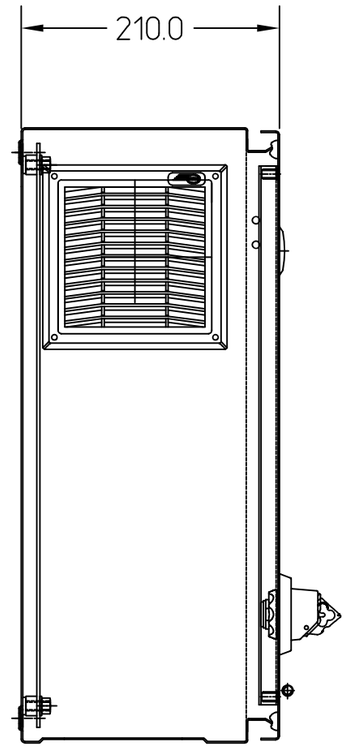

		Schematic Diagram For Enclosed Inverter AC10 Size 2 & 3	A	17/12/2018	MJW
			REV.	DATE	NAME	CHANGES
IDS-AC10-S2/3	LOCATION: L1	Enclosure Layout	Drawing Title 2		

REVISION A

SCHEME 02

Drawing Created with elecworks version : 2019.0.1.19