IA464213 ISSC 01MAY97

PART NUMBER	CURRENT A.C.	CURRENT D.C.	DIM "X"	DIM "Y"	PUBLISHED CENTRES "X"	INDUCTANCE
C0055930	4.5A	5.0A	44	64	44	3.5mH
C0055931	7.5A	10.0A	47	67	48	2.0mH
C0055932	11.0A	15.0A	56	76	56	1.5mH
C0055933	15.0A	20.0A	63	83	64	1.0mH
C0055934						
C0055935						
C0055936						
C0055937						
C0055938						
C0055939						

SEE NOTE 7

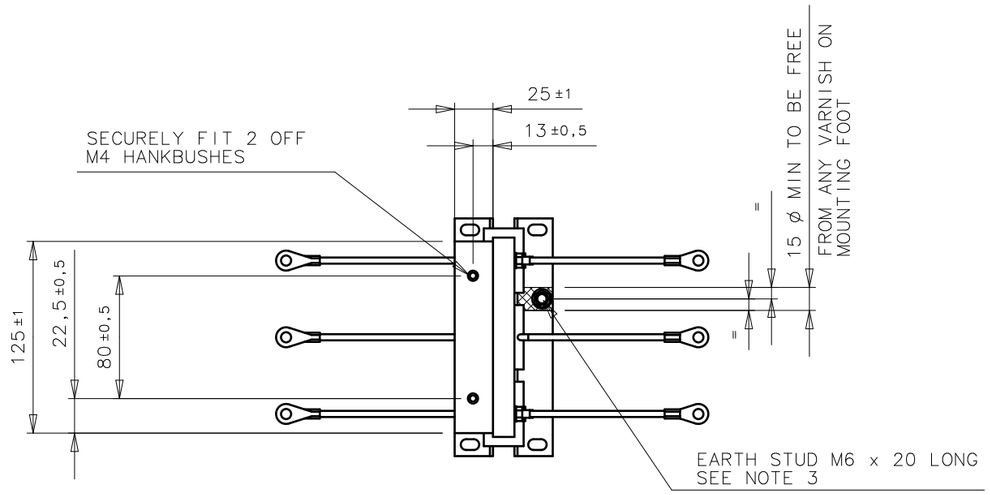

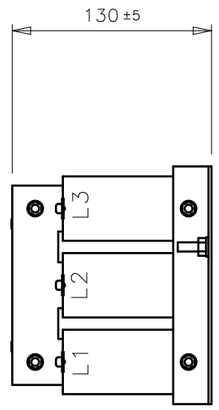

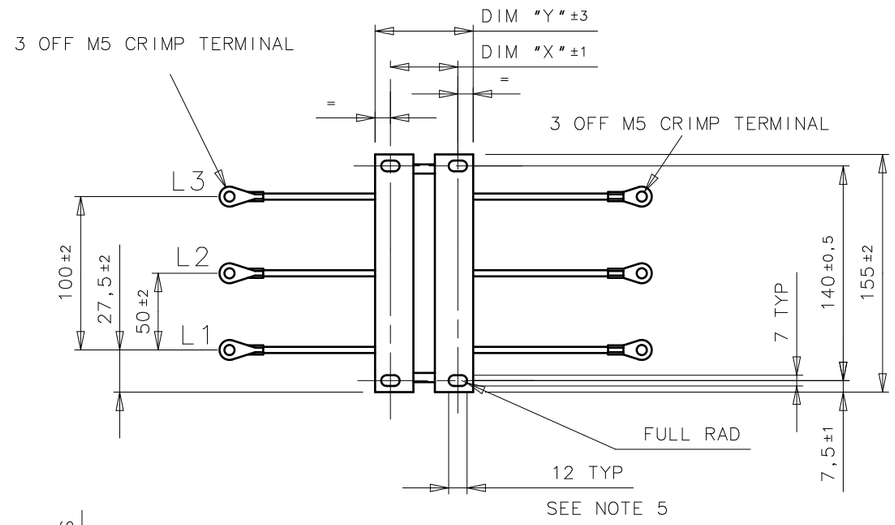

NOTE 1. ALL CRIMP TERMINATION FACES, WIRE ENDS AND EARTH POSITION TO BE FREE FROM ANY VARNISH.
2. FINISHED CHOKES MUST MEET WITH EUROTHERM DRIVES SPEC HL055928 WITH THE FOLLOWING MODIFICATIONS.
   a) WINDINGS MUST BE IMPREGNATED (VACUUM).
   b) RATING LABEL MUST INDICATE A.C. CURRENT, D.C. CURRENT OF ASSOCIATED DRIVE IN PARENTHESIS, INDUCTANCE AND EUROTHERM DRIVES PART NUMBER.
3. EARTH STUD TO BE SELF CLINCHING TYPE, STEEL ZINC PLATED AND TO BE SECURELY FITTED. STUD TO BE FITTED WITH 1 STEEL PLAIN WASHER, 1 LOCK WASHER AND 1 NUT, ALL TO BE ZINC PLATED AND CLEAR PASSIVTED FINISH.
4. TERMINALS AND EARTH TO BE LEGIBLY AND CLEARLY MARKED AS INDICATED.
5. ALTERNATIVE SLOT SIZE CAN BE USED WITH EUROTHERM DRIVES ENGINEERING DEPARTMENTS APPROVAL.
6. ALL THREADED HOLES TO BE FREE FROM ANY VARNISH.
7. THE "PUBLISHED FIXING CENTRES" DO NOT AFFECT THE MANUFACTURE OF THE CHOKES, THESE CENTRES ARE FOR EUROTHERM DRIVES PRODUCT INSTRUCTION MANUALS,

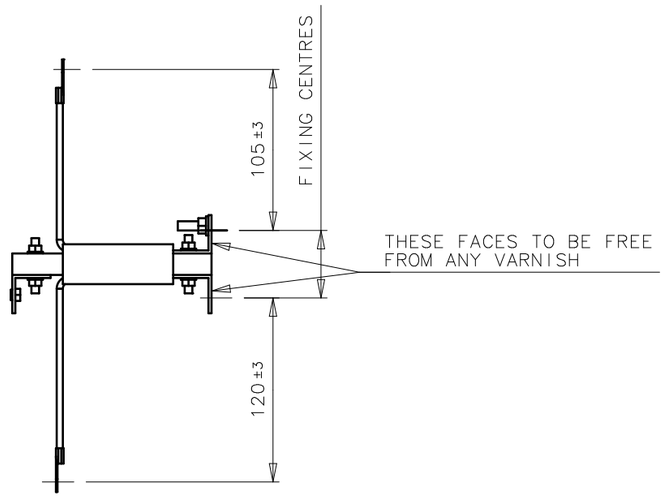

REDRAWN FOR IDEAS

© 2003 EUROTHERM DRIVES LTD./INC.

ISS	DATE	ECO	DRN
6	10DEC03	17950	PAW

EUROTHERM DRIVES

MATERIAL: SEE DRAWING

FINISH: SEE DRAWING

DO NOT SCALE
DIMENSIONS IN MM UNLESS OTHERWISE SPECIFIED

DRG SIZE ISO A3 ANSI B

SCALE 1:4

TOLERANCES: SEE DRAWING

BS308/ANSI Y14.5M 82
BS3939/IEEE Std91 84

ENGINEERED PAW
CHECKED CC
FIRST USED VARIOUS

ELECTRONIC STORAGE DETAILS. I-DEAS PROJECT: std-mec_chk
I-DEAS/INFOFLO DESCRIPTION chk_ac_3ph_4a5_3uh5

TITLE
CHOKE A.C. 3 PHASE
OUTLINE DRAWING

DRAWING NUMBER C0055930 TO 39

SHT 1 OF 1