Σ-Ⅱ Series SGM□H/SGDH

USER'S MANUAL

SGMAH/SGMPH/SGMGH/SGMSH/SGMDH/SGMUH Servomotors
SGDH SERVOPACK

YASKAWA

MANUAL NO. SIEPS80000005C

Copyright © 2003 YASKAWA ELECTRIC CORPORATION

All rights reserved. No part of this publication may be reproduced, stored in a retrieval system, or transmitted, in any form, or by any means, mechanical, electronic, photocopying, recording, or otherwise, without the prior written permission of Yaskawa. No patent liability is assumed with respect to the use of the information contained herein. Moreover, because Yaskawa is constantly striving to improve its high-quality products, the information contained in this manual is subject to change without notice. Every precaution has been taken in the preparation of this manual. Nevertheless, Yaskawa assumes no responsibility for errors or omissions. Neither is any liability assumed for damages resulting from the use of the information contained in this publication.

About this Manual

■ Intended Audience

This manual is intended for the following users.

- Those selecting Σ-II Series servodrives or peripheral devices for Σ-II Series servodrives.
- Those wanting to know about the ratings and characteristics of Σ-II Series servodrives.
- Those designing Σ-II Series servodrive systems.
- Those installing or wiring Σ-II Series servodrives.
- Those performing trial operation or adjustments of Σ-II Series servodrives.
- Those maintaining or inspecting Σ-II Series servodrives.

■ Description of Technical Terms

The terms in this manual are defined as follows:

- Servomotor or motor = Σ-II Series SGMAH, SGMPH, SGMGH, SGMSH, SGMDH, SGMUH servomotor.
- SERVOPACK = Σ-II Series SGDH amplifier.
- Servodrive = A set including a servomotor and servo amplifier.
- Servo System = A servo control system that includes the combination of a servodrive with a host computer and peripheral devices.
- Parameter number = Numbers that the user inputs toward the SERVOPACK.

■ Indication of Reverse Signals

In this manual, the names of reverse signals (ones that are valid when low) are written with a forward slash (/) before the signal name, as shown in the following example:

- $\overline{\text{S-ON}}$ = /S-ON
- $\overline{\text{P-CON}}$ = /P-CON

■ Quick access to your required information

Read the chapters marked with ✓ to get the information required for your purpose.

Chapter	SERVOPACKs, Servomotors, and Peripheral Devices	Ratings and Character-istics	System Design	Panel Configura-tion and Wiring	Trial Operation and Servo Adjustment	Inspection and Maintenance
Chapter 1 Outline	✓					
Chapter 2 Selections	✓					
Chapter 3 Specifications and Dimensional Drawings	✓	✓	✓	✓		
Chapter 4 SERVOPACK Specifications and Dimensional Drawings	✓	✓	✓	✓		
Chapter 5 Specifications and Dimensional Drawings of Cables and Peripheral Devices	✓	✓	✓	✓		
Chapter 6 Wiring			✓	✓	✓	
Chapter 7 Digital Operator/Panel Operator			✓		✓	
Chapter 8 Operation					✓	
Chapter 9 Adjustments						✓
Chapter 10 Inspection, Maintenance, and Troubleshooting						✓
Chapter 11 Appendix	✓		✓		✓	✓

■ Visual Aids

The following aids are used to indicate certain types of information for easier reference.

IMPORTANT

- Indicates important information that should be memorized, including precautions such as alarm displays to avoid damaging the devices.

INFO

- Indicates supplemental information.

◀ EXAMPLE ▶

- Indicates application examples.

TERMS

- Indicates definitions of difficult terms or terms that have not been previously explained in this manual.

Related Manuals

Refer to the following manuals as required.

Manual Name	Manual Number	Contents
Σ-II Series SGM□H/SGDM Digital Operator Operation Manual	TOE-S800-34	Provides detailed information on the operating method of JUSP-OP02A-2 type Digital Operator (option device).
Σ-II Series SERVOPACKs Personal Computer Monitoring Software Operation Manual	SIE-S800-35	Describes the using and the operating methods on software that changes the local personal computer into the monitor equipment for the Σ-II Series servomotor.
Σ-II Series SGDH Fully Closed Interface Unit User's Manual Type: JUSP-FC100	SIE-C718-5	Provides detailed information on the fully closed control of the JUSP-FC100 interface unit.
Σ-II Series SGDH MECHATROLINK Interface Unit User's Manual Type: JUSP-NS100	SIE-C718-4	Provides detailed information on the MECHATROLINK communications.
Σ-II Series SGDH DeviceNet Interface Unit User's Manual Type: JUSP-NS300	SIE-C718-6	Describes the DeviceNet communications.
Σ-II Series Indexer Application Module User's Manual Type: JUSP-NS600	SIE-C718-9	Provides detailed information on the positioning by the communications and the contact points.

Safety Information

The following conventions are used to indicate precautions in this manual. Failure to heed precautions provided in this manual can result in serious or possibly even fatal injury or damage to the products or to related equipment and systems.

⚠ WARNING

Indicates precautions that, if not heeded, could possibly result in loss of life or serious injury.

⚠ CAUTION

Indicates precautions that, if not heeded, could result in relatively serious or minor injury, damage to the product, or faulty operation.

In some situations, the precautions indicated could have serious consequences if not heeded.

PROHIBITED

Indicates prohibited actions that must not be performed. For example, this symbol would be used as follows to indicate that fire is prohibited: .

MANDATORY

Indicates compulsory actions that must be performed. For example, this symbol would be used as follows to indicate that grounding is compulsory: .

The warning symbols for ISO and JIS standards are different, as shown below.

ISO	JIS
⚠	◇!

The ISO symbol is used in this manual.

Both of these symbols appear on warning labels on Yaskawa products. Please abide by these warning labels regardless of which symbol is used.

Notes for Safe Operation

Read this manual thoroughly before checking products on delivery, storage and transportation, installation, wiring, operation and inspection, and disposal of the AC servodrive.

⚠ WARNING

- Never touch any rotating motor parts while the motor is running.
  Failure to observe this warning may result in injury.
- Before starting operation with a machine connected, make sure that an emergency stop can be applied at any time.
  Failure to observe this warning may result in injury.
- Never touch the inside of the SERVOPACKs.
  Failure to observe this warning may result in electric shock.
- Do not touch terminals for five minutes after the power is turned OFF.
  Residual voltage may cause electric shock.
- Do not touch terminals for five minutes after voltage resistance test.
  Residual voltage may cause electric shock.
- Follow the procedures and instructions for trial operation precisely as described in this manual.
  Malfunctions that occur after the servomotor is connected to the equipment not only damage the equipment, but may also cause an accident resulting in death or injury.
- The multiturn limit value must be changed only for special applications.
  Changing it inappropriately or unintentionally can be dangerous.
- If the Multiturn Limit Disagreement alarm (A.CC) occurs, check the setting of parameter Pn205 in the SERVOPACK to be sure that it is correct.
  If Fn013 is executed when an incorrect value is set in Pn205, an incorrect value will be set in the encoder. The alarm will disappear even if an incorrect value is set, but incorrect positions will be detected, resulting in a dangerous situation where the machine will move to unexpected positions.
- Do not remove the front cover, cables, connectors, or optional items while the power is ON.
  Failure to observe this warning may result in electric shock.
- Do not damage, press, exert excessive force or place heavy objects on the cables.
  Failure to observe this warning may result in electric shock, stopping operation of the product, or burning.
- Provide an appropriate stopping device on the machine side to ensure safety. A holding brake for a servomotor with brake is not a stopping device for ensuring safety.
  Failure to observe this warning may result in injury.
- Do not come close to the machine immediately after resetting momentary power loss to avoid an unexpected restart. Take appropriate measures to ensure safety against an unexpected restart.
  Failure to observe this warning may result in injury.
- Connect the ground terminal to electrical codes (ground resistance: 100 Ω or less).
  Improper grounding may result in electric shock or fire.

⚠ WARNING

- Installation, disassembly, or repair must be performed only by authorized personnel.
  Failure to observe this warning may result in electric shock or injury.
- Do not modify the product.
  Failure to observe this warning may result in injury or damage to the product.

■ Checking on Delivery

⚠ CAUTION

- Always use the servomotor and SERVOPACK in one of the specified combinations.
  Failure to observe this caution may result in fire or malfunction.

■ Storage and Transportation

⚠ CAUTION

- Do not store or install the product in the following places.
  - Locations subject to direct sunlight.
  - Locations subject to temperatures outside the range specified in the storage or installation temperature conditions.
  - Locations subject to humidity outside the range specified in the storage or installation humidity conditions.
  - Locations subject to condensation as the result of extreme changes in temperature.
  - Locations subject to corrosive or flammable gases.
  - Locations subject to dust, salts, or iron dust.
  - Locations subject to exposure to water, oil, or chemicals.
  - Locations subject to shock or vibration.

  Failure to observe this caution may result in fire, electric shock, or damage to the product.
- Do not hold the product by the cables or motor shaft while transporting it.
  Failure to observe this caution may result in injury or malfunction.
- Do not place any load exceeding the limit specified on the packing box.
  Failure to observe this caution may result in injury or malfunction.

■ Installation

⚠ CAUTION

- Never use the products in an environment subject to water, corrosive gases, inflammable gases, or combustibles.
  Failure to observe this caution may result in electric shock or fire.
- Do not step on or place a heavy object on the product.
  Failure to observe this caution may result in injury.
- Do not cover the inlet or outlet parts and prevent any foreign objects from entering the product.
  Failure to observe this caution may cause internal elements to deteriorate resulting in malfunction or fire.
- Be sure to install the product in the correct direction.
  Failure to observe this caution may result in malfunction.
- Provide the specified clearances between the SERVOPACK and the control panel or with other devices.
  Failure to observe this caution may result in fire or malfunction.
- Do not apply any strong impact.
  Failure to observe this caution may result in malfunction.

■ Wiring

⚠ CAUTION

- Do not connect a three-phase power supply to the U, V, or W output terminals.
  Failure to observe this caution may result in injury or fire.
- Securely connect the power supply terminals and motor output terminals.
  Failure to observe this caution may result in fire.
- Do not bundle or run power and signal lines together in the same duct. Keep power and signal lines separated by at least 30 cm (11.81 in).
  Failure to observe this caution may result in malfunction.
- Use twisted-pair shielded wires or multi-core twisted pair shielded wires for signal and encoder (PG) feedback lines.
  The maximum length is 3 m (118.11 in) for reference input lines and is 20 m (787.40 in) for PG feedback lines.
- Do not touch the power terminals for five minutes after turning power OFF because high voltage may still remain in the SERVOPACK.
  Make sure the charge indicator is turned OFF first before starting an inspection.
- Avoid frequently turning power ON and OFF. Do not turn power ON or OFF more than once per minute.
  Since the SERVOPACK has a capacitor in the power supply, a high charging current flows for 0.2 seconds when power is turned ON. Frequently turning power ON and OFF causes main power devices such as capacitors and fuses to deteriorate, resulting in unexpected problems.
- Observe the following precautions when wiring main circuit terminal blocks.
  - Remove the terminal block from the SERVOPACK prior to wiring.
  - Insert only one wire per terminal on the terminal block.
  - Make sure that the core wire is not electrically shorted to adjacent core wires.
- Do not connect the SERVOPACK for 100 V and 200 V directly to a voltage of 400 V.
  The SERVOPACK will be destroyed.
- Install the battery at either the host controller or the SERVOPACK of the encoder.
  It is dangerous to install batteries at both simultaneously, because that sets up a loop circuit between the batteries.
- Be sure to wire correctly and securely.
  Failure to observe this caution may result in motor overrun, injury, or malfunction.
- Always use the specified power supply voltage.
  An incorrect voltage may result in burning.
- Take appropriate measures to ensure that the input power supply is supplied within the specified voltage fluctuation range. Be particularly careful in places where the power supply is unstable.
  An incorrect power supply may result in damage to the product.
- Install external breakers or other safety devices against short-circuiting in external wiring.
  Failure to observe this caution may result in fire.

⚠ CAUTION

- Take appropriate and sufficient countermeasures for each when installing systems in the following locations.
  - Locations subject to static electricity or other forms of noise.
  - Locations subject to strong electromagnetic fields and magnetic fields.
  - Locations subject to possible exposure to radioactivity.
  - Locations close to power supplies including power supply lines.

  Failure to observe this caution may result in damage to the product.
- Do not reverse the polarity of the battery when connecting it.

  Failure to observe this caution may damage the battery or cause it to explode.

■ Operation

⚠ CAUTION

- Conduct trial operation on the servomotor alone with the motor shaft disconnected from machine to avoid any unexpected accidents.

  Failure to observe this caution may result in injury.
- Before starting operation with a machine connected, change the settings to match the parameters of the machine.

  Starting operation without matching the proper settings may cause the machine to run out of control or malfunction.
- Forward run prohibited (P-OT) and reverse run prohibited (N-OT) signals are not effective during zero point search mode using parameter Fn003.
- When using the servomotor for a vertical axis, install the safety devices to prevent workpieces to fall off due to occurrence of alarm or overtravel. Set the servomotor so that it will stop in the zero clamp state at occurrence of overtravel.

  Failure to observe this caution may cause workpieces to fall off due to overtravel.
- When not using the normal autotuning, set to the correct moment of inertia ratio.

  Setting to an incorrect moment of inertia ratio may cause vibration.
- Do not touch the SERVOPACK heatsinks, regenerative resistor, or servomotor while power is ON or soon after the power is turned OFF.

  Failure to observe this caution may result in burns due to high temperatures.
- Do not make any extreme adjustments or setting changes of parameters.

  Failure to observe this caution may result in injury due to unstable operation.
- When an alarm occurs, remove the cause, reset the alarm after confirming safety, and then resume operation.

  Failure to observe this caution may result in injury.
- Do not use the servo brake of the servomotor for ordinary braking.

  Failure to observe this caution may result in malfunction.

■ Maintenance and Inspection

⚠ CAUTION

- When replacing the SERVOPACK, transfer the previous SERVOPACK parameters to the new SERVOPACK before resuming operation.
  Failure to observe this caution may result in damage to the product.
- Do not attempt to change wiring while the power is ON.
  Failure to observe this caution may result in electric shock or injury.
- Do not disassemble the servomotor.
  Failure to observe this caution may result in electric shock or injury.

■ Disposal

⚠ CAUTION

- When disposing of the products, treat them as ordinary industrial waste.

■ General Precautions

Note the following to ensure safe application.

- The drawings presented in this manual are sometimes shown without covers or protective guards. Always replace the cover or protective guard as specified first, and then operate the products in accordance with the manual.
- The drawings presented in this manual are typical examples and may not match the product you received.
- This manual is subject to change due to product improvement, specification modification, and manual improvement. When this manual is revised, the manual code is updated and the new manual is published as a next edition.
- If the manual must be ordered due to loss or damage, inform your nearest Yaskawa representative or one of the offices listed on the back of this manual.
- Yaskawa will not take responsibility for the results of unauthorized modifications of this product. Yaskawa shall not be liable for any damages or troubles resulting from unauthorized modification.

CONTENTS

About this Manual - iii
Related Manuals - v
Safety Information - vi
Notes for Safe Operation - vii

1 Outline

1.1 Checking Products - 1-2
1.1.1 Check Items - 1-2
1.1.2 Servomotors - 1-2
1.1.3 SERVOPACKs - 1-3

1.2 Product Part Names - 1-4
1.2.1 Servomotors - 1-4
1.2.2 SERVOPACKs - 1-5

1.3 Examples of Servo System Configurations - - - - - - - - - - - - - - 1-7
1.3.1 Single-phase, 100 V, 200 V and 220 V Main Circuit - - - - - - - - - - - - - - - - 1-7
1.3.2 Three-phase, 200 V Main Circuit - 1-8
1.3.3 Three-phase, 400 V Main Circuit - 1-9

1.4 Applicable Standards - 1-10
1.4.1 North American Safety Standards (UL, CSA) - - - - - - - - - - - - - - - - - - - 1-10
1.4.2 CE Marking - 1-10

2 Selections

2.1 Servomotor Model Designations - 2-2
2.1.1 Model SGMAH (3000 min^{-1}) - 2-2
2.1.2 Model SGMPH (3000 min^{-1}) - 2-4
2.1.3 Model SGMGH (1500 min^{-1}) - 2-6
2.1.4 Model SGMGH (1000 min^{-1}) - 2-8
2.1.5 Model SGMSH (3000 min^{-1}) - 2-10
2.1.6 Model SGMDH (2000 min^{-1}) - 2-12
2.1.7 Model SGMUH (6000 min^{-1}) - 2-13

2.2 Selecting Servomotors - 2-14
2.2.1 Support Tool for the Capacity Selection of the AC Servomotors - - - - 2-14
2.2.2 Servomotor Capacity Selection Examples - 2-14

2.3 SERVOPACK Model Designations - 2-15

2.4 Σ-II Series SERVOPACKs and Applicable Servomotors - - 2-16

2.5 Selecting Cables - 2-17
2.5.1 Cables for SGMAH and SGMPH Servomotors - - - - - - - - - - - - - - - - - 2-17
2.5.2 Cables for SGMGH/SGMSH/SGMDH/SGMUH Servomotors - - - - - - 2-22

2.6 Selecting Peripheral Devices - 2-26
2.6.1 Special Options - 2-26
2.6.2 Molded-case Circuit Breaker and Fuse Capacity - - - - - - - - - - - - - - - 2-29
2.6.3 Noise Filters, Magnetic Contactors, Surge Suppressors and DC Reactors - 2-30
2.6.4 Regenerative Resistors and Brake Power Supply Units - - - - - - - - - - 2-31

3 Specifications and Dimensional Drawings

3.1 Ratings and Specifications of SGMAH (3000 min^{-1}) - - - - - - - 3-4
3.1.1 SGMAH Servomotors Without Gears - 3-4
3.1.2 SGMAH Servomotors With Standard Backlash Gears - - - - - - - - - - - - 3-6
3.1.3 SGMAH Servomotors With Low-backlash Gears - - - - - - - - - - - - - - - - 3-8

3.2 Ratings and Specifications of SGMPH (3000min^{-1}) - - - - - - 3-11
3.2.1 SGMPH Servomotors Without Gears - 3-11
3.2.2 SGMPH Servomotors With Standard Backlash Gears - - - - - - - - - - - 3-13
3.2.3 SGMPH Servomotors With Low-backlash Gears - - - - - - - - - - - - - - - 3-15

3.3 Ratings and Specifications of SGMGH (1500min^{-1}) - - - - - - 3-17
3.3.1 SGMGH Servomotors (1500min^{-1}) Without Gears - - - - - - - - - - - - - - 3-17
3.3.2 SGMGH Servomotors (1500min^{-1}) With Standard Backlash Gears - - 3-21
3.3.3 SGMGH Servomotors (1500min^{-1}) With Low-backlash Gears - - - - - 3-23

3.4 Ratings and Specifications of SGMGH (1000min^{-1}) - - - - - - 3-26
3.4.1 SGMGH Servomotors (1000min^{-1}) Without Gears - - - - - - - - - - - - - 3-26
3.4.2 SGMGH servomotors (1000min^{-1}) With Standard Backlash Gears - 3-29
3.4.3 SGMGH Servomotors (1000 min^{-1}) With Low-backlash Gears - - - - - 3-31

3.5 Ratings and Specifications of SGMSH (3000min^{-1}) - - - - - - 3-33
3.5.1 SGMSH Servomotors (3000min^{-1}) Without Gears - - - - - - - - - - - - - - 3-33
3.5.2 SGMSH Servomotors (3000min^{-1}) With Low-backlash Gears - - - - - 3-36

3.6 Ratings and Specifications of SGMDH (2000min^{-1}) - - - - - - 3-39
3.6.1 SGMDH Servomotors (2000min^{-1}) With Holding Brakes - - - - - - - - - 3-39

3.7 Ratings and Specifications of SGMUH (6000min^{-1}) - - - - - - 3-41
3.7.1 SGMUH Servomotors (6000min^{-1}) Without Holding Brakes - - - - - - - 3-41

3.8 Mechanical Specifications of Servomotors - - - - - - - - - - - - - 3-43
3.8.1 Precautions on Servomotor Installation - 3-43
3.8.2 Mechanical Tolerance - 3-44
3.8.3 Direction of Servomotor Rotation - 3-45
3.8.4 Impact Resistance - 3-45
3.8.5 Vibration Resistance - 3-45
3.8.6 Vibration Class - 3-45

3.9 Terms and Data for Servomotors With Gears - - - - - - - - - - 3-46

3.10 Servomotor Dimensional Drawings - - - - - - - - - - - - - - - - - 3-48

3.11 Dimensional Drawings of SGMAH Servomotors (3000 min^{-1}) - 3-49

3.11.1 SGMAH Servomotors (3000 min^{-1}) Without Gears - - - - - - - - - - - - - 3-49

3.11.2 SGMAH Servomotors (3000 min^{-1}) With Brakes - - - - - - - - - - - - - - - 3-53

3.11.3 SGMAH Servomotors (3000 min^{-1}) With Standard Backlash Gears - 3-57

3.11.4 SGMAH Servomotors (3000 min^{-1}) With Standard Backlash Gears and Brakes - 3-64

3.11.5 SGMAH Servomotors (3000 min^{-1}) With Low-backlash Gears - - - - - 3-71

3.12 Dimensional Drawings of SGMPH Servomotors (3000 min^{-1}) - 3-79

3.12.1 SGMPH Servomotors (3000 min^{-1}) Without Gears and Brake - - - - - 3-79

3.12.2 SGMPH Servomotors (3000 min^{-1}) With Brakes - - - - - - - - - - - - - - 3-81

3.12.3 SGMPH Servomotors (3000 min^{-1}) With Standard Backlash Gears - 3-83

3.12.4 SGMPH Servomotors (3000 min^{-1}) With Standard Backlash Gears and Brakes - 3-86

3.12.5 SGMPH Servomotors (3000 min^{-1}) With Low-backlash Gears - - - - - 3-89

3.13 Dimensional Drawing of Output Shafts With Oil Seals for SGMAH and SGMPH Servomotors - - - - - - - - - - - - - - - - - 3-93

3.13.1 SGMAH Servomotors - 3-93

3.13.2 SGMPH Servomotors - 3-93

3.14 Dimensional Drawings of SGMGH Servomotors (1500 min^{-1}) - 3-94

3.14.1 SGMGH Servomotors (1500 min^{-1}) Without Gears and Brakes - - - - 3-94

3.14.2 SGMGH Servomotors (1500 min^{-1}) 200-V Specifications Without Gears and With Brakes - 3-96

3.14.3 Servomotors SGMGH (1500 min^{-1}) 400-V Specifications Without Gears and With Brakes - 3-99

3.14.4 SGMGH Servomotors (1500min^{-1}) With Standard Backlash Gears and Without Brakes (Foot-mounted Type) - - - - - - - - - - - - - - - - - - 3-102

3.14.5 SGMGH Servomotors (1500min^{-1}) With Standard Backlash Gears and Without Brakes (Flange-mounted Type) - - - - - - - - - - - - - - - - 3-108

3.14.6 SGMGH Servomotors (1500min^{-1}) With Low-backlash Gears and Without Brakes (Flange-mounted Type) - - - - - - - - - - - - - - - - - - - 3-116

3.15 Dimensional Drawings of SGMGH Servomotors (1000 min^{-1}) - 3-120

3.15.1 SGMGH Servomotors (1000 min^{-1}) Without Gears and Brakes - - - 3-120

3.15.2 SGMGH Servomotors (1000 min^{-1}) Without Gears and With Brakes - 3-122

3.15.3 SGMGH Servomotors (1000 min^{-1}) With Standard Backlash Gears and Without Brakes (Foot-mounted Type) - - - - - - - - - - - - - - - - - - 3-125

3.15.4 SGMGH Servomotors (1000 min^{-1}) With Standard Backlash Gears and Without Brakes (Flange-mounted Type) - - - - - - - - - - - - - - - - 3-130

3.15.5 SGMGH Servomotors (1000 min^{-1}) With Low-backlash Gears and Without Brakes (Flange-mounted Type) - - - - - - - - - - - - - - - - - - - 3-137

3.16 Dimensional Drawings of SGMSH Servomotors (3000min^{-1}) - 3-141

3.16.1 SGMSH Servomotors (3000min^{-1}) Without Gears and Without Brakes - 3-141

3.16.2 SGMSH Servomotors (3000 min^{-1}) 200-V Specifications Without Gears With Brakes- 3-143

3.16.3 SGMSH Servomotors (3000 min^{-1}) 400-V Specifications Without Gears With Brakes- 3-145

3.16.4 SGMSH Servomotors (3000 min^{-1}) With Low-backlash Gears and Without Brakes (Flange-mounted Type) - - - - - - - - - - - - - - - - - - - 3-147

3.17 Dimensional Drawings of SGMDH Servomotors (2000min^{-1}) - 3-151

3.17.1 SGMDH Servomotors (2000min^{-1}) Without Gears and With/Without Brakes- 3-151

3.18 Dimensional Drawings of SGMUH Servomotors (6000min^{-1}) - 3-153

3.18.1 SGMUH Servomotors (6000min^{-1}) Without Gears and Without Brakes - 3-153

3.18.2 SGMUH Servomotors (6000min^{-1}) Without Gears and With Brakes - 3-154

3.19 Shaft End Specifications for SGMGH, SGMSH and SGMDH Servomotors - 3-156

4 SERVOPACK Specifications and Dimensional Drawings

4.1 SERVOPACK Ratings and Specifications - - - - - - - - - - - - - - 4-3

4.1.1 Single-phase 100 V - 4-3

4.1.2 Single-phase/Three-phase 200 V - 4-3

4.1.3 Single-phase 220 V (Option) - 4-4

4.1.4 Three-phase 400 V - 4-4

4.1.5 SERVOPACK Ratings and Specifications - 4-5

4.2 SERVOPACK Installation - 4-7

4.3 SERVOPACK Internal Block Diagrams - - - - - - - - - - - - - - - - - 4-9

4.3.1 Single-phase 200 V, 30 W to 400 W, and 100 V, 30 W to 200 W Models - 4-9

4.3.2 Three-phase 200 V, 500 W to 1.5 kW, and Single-phase 220 V, 800 W, 1.5 kW Models - 4-10

4.3.3 Three-phase 200 V, 2.0 kW to 5.0 kW Models - - - - - - - - - - - - - - - - - 4-11

4.3.4 Three-phase 200 V, 6.0 kW to 15 kW Models - - - - - - - - - - - - - - - - - - 4-12

4.3.5 Three-phase 400 V, 500 W to 3.0 kW Models - - - - - - - - - - - - - - - - - - 4-13

4.3.6 Three-phase 400 V, 5.0 kW Model - 4-14

4.3.7 Three-phase 400 V, 6.0 kW, 7.5 kW Models - - - - - - - - - - - - - - - - - - 4-15

4.3.8 Three-phase 400 V, 11.0 kW, 15.0 kW Models - - - - - - - - - - - - - - - - - 4-16

4.4 SERVOPACK's Power Supply Capacities and Power Losses - 4-17

4.5 SERVOPACK Overload Characteristics and Allowable Load Moment of Inertia - 4-19
4.5.1 Overload Characteristics - 4-19
4.5.2 Starting and Stopping Time - 4-20
4.5.3 Load Moment of Inertia - 4-20
4.6 SERVOPACK Dimensional Drawings - - - - - - - - - - - - - - - - - 4-23
4.7 Dimensional Drawings of Base-mounted SERVOPACK Model - 4-24
4.7.1 Single-phase 100 V: 30 W/50 W/100 W (A3BE/A5BE/01BE)
Single-phase 200 V: 30 W/50 W/100 W/200 W
(A3AE/A5AE/01AE/02AE) - 4-24
4.7.2 Single-phase 100 V: 200 W (02BE)
Single-phase 200 V: 400 W (04AE) - 4-25
4.7.3 Three-phase 200 V: 500 W/750 W/1.0 kW (05AE/08AE/10AE)
Single-phase 220 V: 750 W (08AE-S)- 4-26
4.7.4 Three-phase 200 V: 1.5 kW (15AE)
Three-phase 400 V: 500 W/750 W/1.0 kW/1.5 kW
(05DE/08DE/10DE/15DE) - 4-27
4.7.5 Single-phase 220 V: 1.5 kW (15AE-S)
Three-phase 200 V: 2.0 kW/3.0 kW (20AE/30AE)
Three-phase 400 V: 2.0 kW/3.0 kW (20DE/30DE) - - - - - - - - - - - - - - - - 4-28
4.7.6 Three-phase 200 V: 5.0 kW (50AE)
Three-phase 400 V: 5.0 kW (50DE) - 4-29
4.7.7 Three-phase 200 V: 6.0 kW/7.5 kW (60AE/75AE) - - - - - - - - - - - - - - - 4-30
4.7.8 Three-phase 400 V: 6.0 kW/7.5 kW (60DE/75DE) - - - - - - - - - - - - - - - 4-31
4.7.9 Three-phase 200 V: 11.0 kW/15.0 kW (1AAE/1EAE) - - - - - - - - - - - - - 4-32
4.7.10 Three-phase 400 V: 11.0 kW/15.0 kW (1ADE/1EDE) - - - - - - - - - - - - 4-33
4.8 Dimensional Drawings of Rack-mounted SERVOPACK Model - 4-34
4.8.1 Single-phase 100 V: 30 W/50 W/100 W (A3BE-R/A5BE-R/01BE-R)
Single-phase 200 V: 30 W/50 W/100 W/200 W
(A3AE-R/A5AE-R/01AE-R/ 02AE-R) - 4-34
4.8.2 Single-phase 100 V: 200 W (02BE-R)
Single-phase 200 V: 400 W (04AE-R)- 4-35
4.8.3 Single-phase 220 V: 750 W (08AE-S-R)
Three-phase 200 V: 500 W/750 W/1.0 kW
(05AE-R/08AE-R/10AE-R) - 4-36
4.8.4 Three-phase 200 V: 1.5 kW (15AE-R)
Three-phase 400 V: 500 W/750 W/1.0 kW/1.5 kW
(05DE-R/08DE-R/10DE-R/15DE-R) - 4-37
4.8.5 Single-phase 220 V: 1.5 kW (15AE-S-R)- 4-38
4.8.6 Three-phase 200 V: 2.0 kW/3.0 kW (20AE-R/30AE-R)
Three-phase 400 V: 2.0 kW/3.0 kW (20DE-R/30DE-R)- - - - - - - - - - - 4-39
4.8.7 Three-phase 200 V: 5.0 kW (50AE-R)
Three-phase 400 V: 5.0 kW (50DE-R) - 4-40

4.9 Dimensional Drawings of Duct-ventilated SERVOPACK Model - 4-41
4.9.1 Three-phase 200 V: 6.0 kW/7.5 kW (60AE-P/75AE-P)- - - - - - - - - - - 4-41
4.9.2 Three-phase 400 V: 6.0 kW/7.5 kW (60DE-P/75DE-P) - - - - - - - - - - 4-42
4.9.3 Three-phase 200 V: 11.0 kW/15.0 kW (1AAE-P/1EAE-P)- - - - - - - - - 4-43
4.9.4 Three-phase 400 V: 11.0 kW/15.0 kW (1ADE-P/1EDE-P) - - - - - - - - 4-44

5 Specifications and Dimensional Drawings of Cables and Peripheral Devices

5.1 Specifications and Dimensional Drawings of Servomotor Main Circuit Cable - 5-3
5.1.1 Cables for SGMAH and SGMPH Servomotors Without Brakes- - - - - - 5-3
5.1.2 Cables for SGMAH and SGMPH Servomotors With Brakes - - - - - - - - 5-3
5.1.3 Flexible Cables for SGMAH and SGMPH Servomotors Without Brakes - 5-4
5.1.4 Flexible Cables for SGMAH and SGMPH Servomotors With Brakes - - 5-5
5.1.5 Cables for 400 V SGMAH and SGMPH Servomotors Without Brakes - 5-5
5.1.6 Cables for 400 V SGMAH and SGMPH Servomotors With Brakes - - - 5-6

5.2 Servomotor Main Circuit Wire Size and Connectors- - - - - - - 5-7
5.2.1 Wire Size - 5-7
5.2.2 SGMAH and SGMPH Servomotor Connectors for Standard Environments - 5-8
5.2.3 SGMGH, SGMSH, SGMDH, and SGMUH Servomotor Connector Configurations - 5-11
5.2.4 SGMGH Servomotor (1500 min^{-1}) Connectors for Standard Environments - 5-12
5.2.5 SGMGH Servomotor (1000 min^{-1}) Connectors for Standard Environments - 5-15
5.2.6 SGMSH Servomotor (3000 min^{-1}) Connectors for Standard Environments - 5-17
5.2.7 SGMDH Servomotor (2000 min^{-1}) Connectors for Standard Environments - 5-19
5.2.8 SGMUH Servomotor (6000 min^{-1}) Connectors for Standard Environments - 5-19
5.2.9 SGMGH Servomotor (1500 min^{-1}) Connectors Conforming to IP67 and European Safety Standards - 5-22
5.2.10 SGMGH Servomotor (1000 min^{-1}) Connectors Conforming to IP67 and European Safety Standards - 5-27
5.2.11 SGMSH Servomotors (3000 min^{-1}) Connectors Conforming to IP67 and European Safety Standards - 5-30
5.2.12 SGMDH Servomotors (2000 min^{-1}) Connectors Conforming to IP67 and European Safety Standards - 5-34
5.2.13 SGMUH Servomotors (6000 min^{-1}) Connectors Conforming to IP67 and European Safety Standards - 5-35
5.2.14 Connector Dimensional Drawings - 5-38

5.3 SERVOPACK Main Circuit Wire Size - - - - - - - - - - - - - - - - 5-45
5.3.1 Cable Types - - - - 5-45
5.3.2 Single-phase 100 V - - - - 5-46
5.3.3 Single-phase 200 V - - - - 5-46
5.3.4 Three-phase 200 V - - - - 5-46
5.3.5 Three-phase 400 V - - - - 5-47
5.4 Encoder Cables for CN2 Connector - - - - 5-48
5.4.1 Encoder Cable With Connectors For SGMAH and SGMPH Servomotors - - - - 5-48
5.4.2 Encoder Cable for SGMGH, SGMSH, SGMDH, and SGMUH Servomotors - - - - 5-48
5.4.3 Encoder Cable With a SERVOPACK Connector and Encoder Loose Leads for SGMAH and SGMPH Servomotors - - - - 5-49
5.4.4 Encoder Cable with a SERVOPACK Connector and Encoder Loose Leads for SGMGH, SGMSH, SGMDH, and SGMUH Servomotors - - 5-50
5.4.5 Encoder Flexible Cables for SGMAH and SGMPH Servomotors - - - - 5-52
5.4.6 Encoder Flexible Cables for SGMGH, SGMSH, SGMDH, and SGMUH Servomotors - - - - 5-53
5.5 Connectors and Cables for Encoder Signals - - - - 5-55
5.5.1 Connectors and Cables for SGMAH and SGMPH Servomotors - - - - 5-55
5.5.2 Connectors and Cables for SGMGH, SGMSH, SGMDH, and SGMUH Servomotors - - - - 5-57
5.6 Flexible Cables - - - - 5-59
5.7 I/O Signal Cables for CN1 Connector - - - - 5-60
5.7.1 Standard Cables - - - - 5-60
5.7.2 Connector Type and Cable Size - - - - 5-60
5.7.3 Connection Diagram - - - - 5-62
5.8 Peripheral Devices - - - - 5-63
5.8.1 Cables for Connecting Personal Computers - - - - 5-63
5.8.2 Digital Operator - - - - 5-64
5.8.3 Cables for Analog Monitor - - - - 5-65
5.8.4 Connector Terminal Block Converter Unit - - - - 5-66
5.8.5 Brake Power Supply Unit - - - - 5-67
5.8.6 External Regenerative Resistor - - - - 5-69
5.8.7 Regenerative Resistor Unit - - - - 5-71
5.8.8 Absolute Encoder Battery - - - - 5-72
5.8.9 Molded-case Circuit Breaker (MCCB) - - - - 5-73
5.8.10 Noise Filter - - - - 5-75
5.8.11 Magnetic Contactor - - - - 5-80
5.8.12 Surge Suppressor - - - - 5-84
5.8.13 DC Reactor for Harmonic Suppression - - - - 5-86
5.8.14 Variable Resistor for Speed and Torque Setting - - - - 5-88
5.8.15 Encoder Signal Converter Unit - - - - 5-89
5.8.16 MECHATROLINK-I I/F Unit - - - - 5-90
5.8.17 DeviceNet I/F Unit - - - - 5-91
5.8.18 PROFIBUS-DP I/F Unit - - - - 5-92
5.8.19 INDEXER Module - - - - 5-94
5.8.20 Setup Support Tool SigmaIndexer - - - - 5-95
5.8.21 Fully-closed I/F Unit - - - - 5-96

6 Wiring

6.1 Wiring Main Circuit - 6-2
6.1.1 Names and Functions of Main Circuit Terminals - - - - - - - - - - - - - - - - 6-2
6.1.2 Wiring Main Circuit Power Supply Connector (Spring Type) - - - - - - - 6-4
6.1.3 Typical Main Circuit Wiring Examples - 6-5
6.2 Wiring Encoders- 6-8
6.2.1 Connecting an Encoder (CN2) and Output Signals from the SERVOPACK (CN1) - 6-8
6.2.2 Encoder Connector (CN2) Terminal Layout - - - - - - - - - - - - - - - - - - - 6-9
6.3 Examples of I/O Signal Connections - - - - - - - - - - - - - - - - - 6-10
6.3.1 Speed Control Mode - 6-10
6.3.2 Position Control Mode - 6-11
6.3.3 Torque Control Mode - 6-12
6.3.4 I/O Signal Connector (CN1) Terminal Layout - - - - - - - - - - - - - - - - - 6-13
6.3.5 I/O Signal (CN1) Names and Functions - 6-14
6.3.6 Interface Circuit - 6-16
6.4 Others- 6-19
6.4.1 Wiring Precautions- 6-19
6.4.2 Wiring for Noise Control - 6-20
6.4.3 Installation Conditions of EMC Directives - 6-23
6.4.4 Installation Conditions of UL Standards - 6-26
6.4.5 Using More Than One SERVOPACK - 6-27
6.4.6 Extending Encoder Cables - 6-28
6.4.7 Operating Conditions on 400-V Power Supply Voltage - - - - - - - - - - 6-30
6.4.8 DC Reactor for Harmonic Suppression - 6-31
6.5 Connecting Regenerative Resistors - - - - - - - - - - - - - - - - - - 6-33
6.5.1 Regenerative Power and Regenerative Resistance- - - - - - - - - - - - - 6-33
6.5.2 Connecting External Regenerative Resistors - - - - - - - - - - - - - - - - - 6-33

7 Digital Operator/Panel Operator

7.1 Functions on Digital Operator/Panel Operator - - - - - - - - - - - 7-2
7.1.1 Connecting the Digital Operator - 7-2
7.1.2 Key Names and Functions - 7-3
7.1.3 Basic Mode Selection and Operation - 7-4
7.1.4 Status Display - 7-6
7.2 Operation in Utility Function Mode (Fn□□□) - - - - - - - - - - - 7-8
7.2.1 List of Utility Function Modes - 7-8
7.2.2 Alarm Traceback Data Display (Fn000) - 7-9
7.2.3 Zero-point Search Mode (Fn003)- 7-10
7.2.4 Parameter Settings Initialization (Fn005) - - - - - - - - - - - - - - - - - - - 7-11
7.2.5 Alarm Traceback Data Clear (Fn006)- 7-12
7.2.6 Automatic Offset-adjustment of Motor Current Detection Signal (Fn00E) - 7-13
7.2.7 Manual Offset-adjustment of Motor Current Detection Signal (Fn00F) 7-14
7.2.8 Password Setting (Protects Parameters from Being Changed) (Fn010)- 7-15

7.2.9 Motor Models Display (Fn011) - 7-16
7.2.10 Software Version Display (Fn012) - 7-17
7.2.11 Application Module Detection Results Clear (Fn014) - - - - - - - - - - - 7-18

7.3 Operation in Parameter Setting Mode (Pn□□□)- - - - - - - - 7-19
7.3.1 Setting Parameters - 7-19
7.3.2 Input Circuit Signal Allocation - 7-23
7.3.3 Output Circuit Signal Allocation - 7-26

7.4 Operation in Monitor Mode (Un□□□) - - - - - - - - - - - - - - - 7-28
7.4.1 List of Monitor Modes - 7-28

8 Operation

8.1 Trial Operation - 8-4
8.1.1 Trial Operation for Servomotor without Load - 8-6
8.1.2 Trial Operation for Servomotor without Load from Host Reference - - - 8-9
8.1.3 Trial Operation with the Servomotor Connected to the Machine - - - - 8-15
8.1.4 Servomotor with Brakes - 8-16
8.1.5 Position Control by Host Controller - 8-16

8.2 Control Mode Selection- 8-17

8.3 Setting Common Basic Functions - - - - - - - - - - - - - - - - - - - 8-18
8.3.1 Setting the Servo ON Signal - 8-18
8.3.2 Switching the Servomotor Rotation Direction - - - - - - - - - - - - - - - - - - 8-19
8.3.3 Setting the Overtravel Limit Function - 8-20
8.3.4 Setting for Holding Brakes - 8-22
8.3.5 Selecting the Stopping Method After Servo OFF - - - - - - - - - - - - - - - 8-25
8.3.6 Instantaneous Power Loss Settings - 8-26

8.4 Absolute Encoders - 8-27
8.4.1 Interface Circuits - 8-28
8.4.2 Selecting an Absolute Encoder - 8-29
8.4.3 Handling Batteries - 8-29
8.4.4 Replacing Batteries- 8-30
8.4.5 Absolute Encoder Setup (Fn008) - 8-30
8.4.6 Absolute Encoder Reception Sequence - 8-32
8.4.7 Multiturn Limit Setting - 8-36
8.4.8 Multiturn Limit Setting When Mutiturn Limit Disagreement (A.CC) Occurred - 8-37

8.5 Operating Using Speed Control with Analog Reference - - - 8-38
8.5.1 Setting Parameters - 8-38
8.5.2 Setting Input Signals - 8-39
8.5.3 Adjusting Offset - 8-40
8.5.4 Soft Start - 8-43
8.5.5 Speed Reference Filter - 8-43
8.5.6 Using the Zero Clamp Function - 8-43
8.5.7 Encoder Signal Output - 8-45
8.5.8 Speed Coincidence Output - 8-47

8.6 Operating Using Position Control - 8-48
8.6.1 Setting Parameters - 8-48
8.6.2 Setting the Electronic Gear - 8-50
8.6.3 Position Reference - 8-53
8.6.4 Smoothing - 8-57
8.6.5 Positioning Completed Output Signal - 8-58
8.6.6 Positioning Near Signal - 8-59
8.6.7 Reference Pulse Inhibit Function (INHIBIT) - - - - - - - - - - - - - - - - - - - 8-60

8.7 Operating Using Torque Control - 8-61
8.7.1 Setting Parameters - 8-61
8.7.2 Torque Reference Input - 8-61
8.7.3 Adjusting the Reference Offset - 8-62
8.7.4 Limiting Servomotor Speed during Torque Control - - - - - - - - - - - - - - 8-64

8.8 Operating Using Speed Control with an Internally Set Speed - 8-66
8.8.1 Setting Parameters - 8-66
8.8.2 Input Signal Settings - 8-67
8.8.3 Operating Using an Internally Set Speed - 8-67

8.9 Limiting Torque - 8-69
8.9.1 Internal Torque Limit (Limiting Maximum Output Torque) - - - - - - - - - 8-69
8.9.2 External Torque Limit (Output Torque Limiting by Input Signals) - - - - 8-70
8.9.3 Torque Limiting Using an Analog Voltage Reference - - - - - - - - - - - - 8-72
8.9.4 Torque Limiting Using an External Torque Limit and Analog Voltage Reference - 8-73
8.9.5 Checking Output Torque Limiting during Operation - - - - - - - - - - - - - 8-74

8.10 Control Mode Selection - 8-75
8.10.1 Setting Parameters - 8-75
8.10.2 Switching the Control Mode - 8-75

8.11 Other Output Signals - 8-77
8.11.1 Servo Alarm Output (ALM) and Alarm Code Output (ALO1, ALO2, ALO3) - 8-77
8.11.2 Warning Output (/WARN) - 8-78
8.11.3 Running Output Signal (/TGON) - 8-78
8.11.4 Servo Ready (/S-RDY) Output - 8-79

9 Adjustments

9.1 Autotuning - 9-2
9.1.1 Servo Gain Adjustment Methods - 9-2
9.1.2 List of Servo Adjustment Functions - 9-3

9.2 Online Autotuning - 9-5
9.2.1 Online Autotuning - 9-5
9.2.2 Online Autotuning Procedure - 9-6
9.2.3 Selecting the Online Autotuning Execution Method - - - - - - - - - - - - - - 9-7
9.2.4 Machine Rigidity Setting for Online Autotuning - - - - - - - - - - - - - - - - - 9-8
9.2.5 Method for Changing the Machine Rigidity Setting - - - - - - - - - - - - - - 9-9
9.2.6 Saving the Results of Online Autotuning - 9-10
9.2.7 Procedure for Saving the Results of Online Autotuning - - - - - - - - - - 9-11

9.3 Manual Tuning - 9-12
9.3.1 Explanation of Servo Gain - 9-12
9.3.2 Servo Gain Manual Tuning - 9-13
9.3.3 Position Loop Gain - 9-13
9.3.4 Speed Loop Gain - 9-14
9.3.5 Speed Loop Integral Time Constant - 9-14
9.4 Servo Gain Adjustment Functions - 9-15
9.4.1 Feed-forward Reference - 9-15
9.4.2 Torque Feed-forward - 9-16
9.4.3 Speed Feed-forward - 9-17
9.4.4 Proportional Control Operation (Proportional Operation Reference) - - 9-18
9.4.5 Using the Mode Switch (P/PI Switching) - 9-19
9.4.6 Setting the Speed Bias - 9-22
9.4.7 Speed Feedback Filter - 9-22
9.4.8 Speed Feedback Compensation - 9-23
9.4.9 Switching Gain Settings - 9-25
9.4.10 Torque Reference Filter - 9-26
9.5 Analog Monitor - 9-28

10 Inspection, Maintenance, and Troubleshooting

10.1 Troubleshooting - 10-2
10.1.1 Alarm Display Table - 10-2
10.1.2 Warning Display - 10-4
10.1.3 Alarm Display Table when the Application Module is Used - - - - - - - 10-5
10.1.4 Warning Display Table when the Application Module is Used - - - - - 10-6
10.1.5 Alarm Display Table when the Linear Motor is Used - - - - - - - - - - - - 10-6
10.1.6 Troubleshooting of Alarm and Warning - 10-7
10.1.7 Troubleshooting for Malfunction without Alarm Display - - - - - - - - - 10-17
10.2 Inspection and Maintenance - 10-22
10.2.1 Servomotor Inspection - 10-22
10.2.2 SERVOPACK Inspection - 10-22
10.2.3 SERVOPACK's Parts Replacement Schedule - - - - - - - - - - - - - - - 10-23

11 Appendix

11.1 Servomotor Capacity Selection Examples - - - - - - - - - - - - 11-2
11.1.1 Selection Example for Speed Control - 11-2
11.1.2 Selection Example for Position Control - 11-4
11.1.3 Calculating the Required Capacity of Regenerative Resistors - - - - - 11-7
11.2 Connection to Host Controller - 11-16
11.2.1 Example of Connection to MP920 4-axes Analog Module SVA-01 - 11-16
11.2.2 Example of Connection to CP-9200SH Servo Controller Module SVA (SERVOPACK in Speed Control Mode) - - - - - - - - - - - - - - - - 11-17
11.2.3 Example of Connection to MEMOCON GL120/130 Series Motion Module MC20 - 11-18
11.2.4 Example of Connection to MEMOCON GL60/70 Series Positioning Module B2813 (SERVOPACK in Position Control Mode) - - - - - - - 11-19
11.2.5 Example of Connection to OMRON's Motion Control Unit - - - - - - - 11-20

11.2.6 Example of Connection to OMRON's Position Control Unit - - - - - - 11-21
11.2.7 Example of Connection to OMRON's Position Control Unit C500-NC221 (SERVOPACK in Speed Control Mode) - - - - - - - - - 11-22
11.2.8 Example of Connection to OMRON's Position Control Unit C500-NC112 (SERVOPACK in Position Control Mode) - - - - - - - - 11-23
11.2.9 Example of Connection to MITSUBISHI's AD72 Positioning Unit (SERVOPACK in Speed Control Mode) - - - - - - - - - - - - - - - - - - - 11-24
11.2.10 Example of Connection to MITSUBISHI's AD75 Positioning Unit (SERVOPACK in Position Control Mode) - - - - - - - - - - - - - - - - - 11-25

11.3 List of Parameters - 11-26
11.3.1 Utility Functions List - 11-26
11.3.2 List of Parameters - 11-27
11.3.3 Monitor Modes - 11-43

11.4 Parameter Recording Table - 11-44

INDEX

1

Outline

1.1 Checking Products - 1-2
1.1.1 Check Items - 1-2
1.1.2 Servomotors - 1-2
1.1.3 SERVOPACKs - 1-3

1.2 Product Part Names - 1-4
1.2.1 Servomotors - 1-4
1.2.2 SERVOPACKs - 1-5

1.3 Examples of Servo System Configurations - - - - - - - - - - - - - - 1-7
1.3.1 Single-phase, 100 V, 200 V and 220 V Main Circuit - - - - - - - - - - - - - - 1-7
1.3.2 Three-phase, 200 V Main Circuit - 1-8
1.3.3 Three-phase, 400 V Main Circuit - 1-9

1.4 Applicable Standards - 1-10
1.4.1 North American Safety Standards (UL, CSA) - - - - - - - - - - - - - - - - - - 1-10
1.4.2 CE Marking - 1-10

1.1 Checking Products

The following procedure is used to check the AC servodrives of Σ-II Series products on delivery.

1.1.1 Check Items

Check the following items when Σ-II Series products are delivered.

Check Items	Comments
Are the delivered products the ones that were ordered?	Check the model numbers marked on the nameplates on the servomotor and SERVOPACK. (Refer to the descriptions of model numbers in the following section.)
Does the servomotor shaft rotate smoothly?	The servomotor shaft is normal if it can be turned smoothly by hand. Servomotors with brakes, however, cannot be turned manually.
Is there any damage?	Check the overall appearance, and check for damage or scratches that may have occurred during shipping.

If any of the above items are faulty or incorrect, contact your Yaskawa representative or the dealer from whom you purchased the products.

1.1.2 Servomotors

•SGMAH and SGMPH

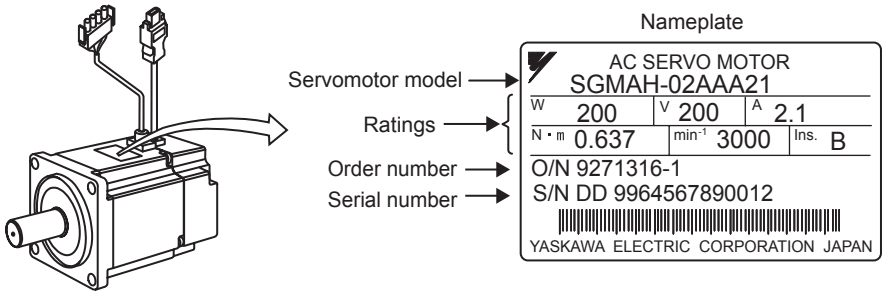

•SGMGH / SGMSH / SGMDH

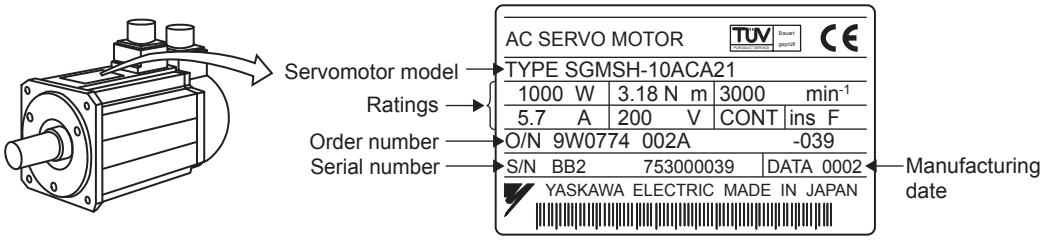

•SGMCS

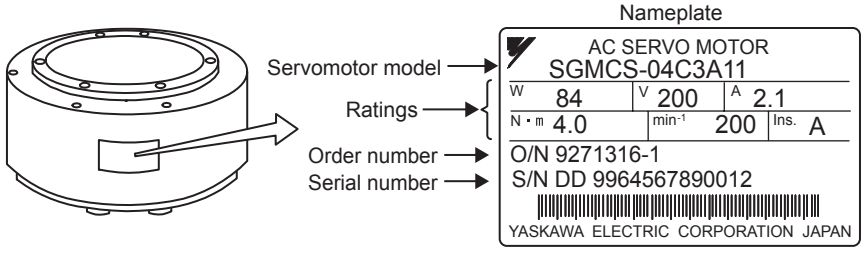

1.1.3 SERVOPACKs

• SGDH for 30 W to 5.0 kW

• SGDH for 6.0 kW to 15.0 kW

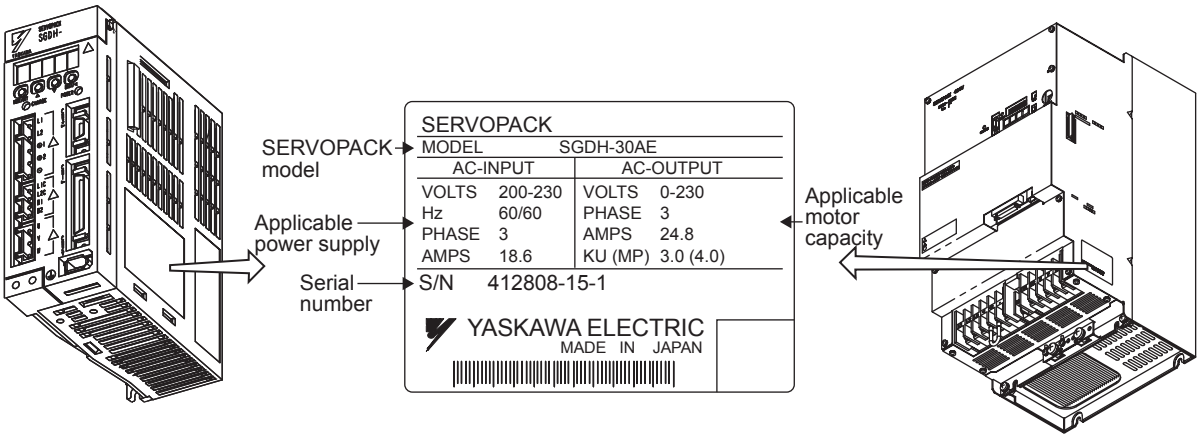

1

1.2 Product Part Names

1.2.1 Servomotors

(1) SGMAH and SGMPH Without Gears and Brakes

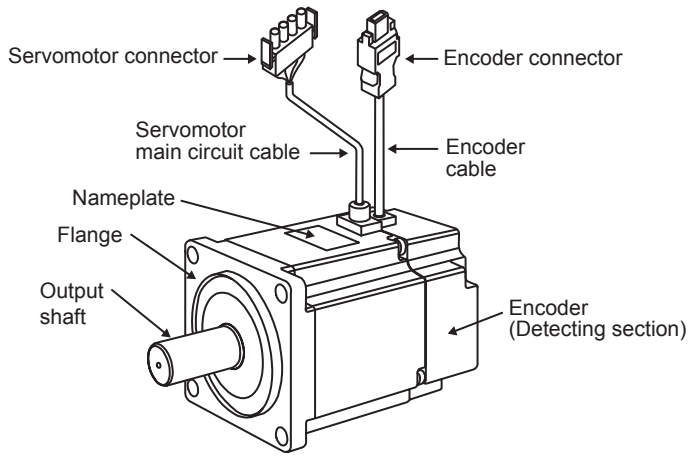

(2) SGMGH/SGMSH/SGMDH/SGMUH Without Gears and Brakes

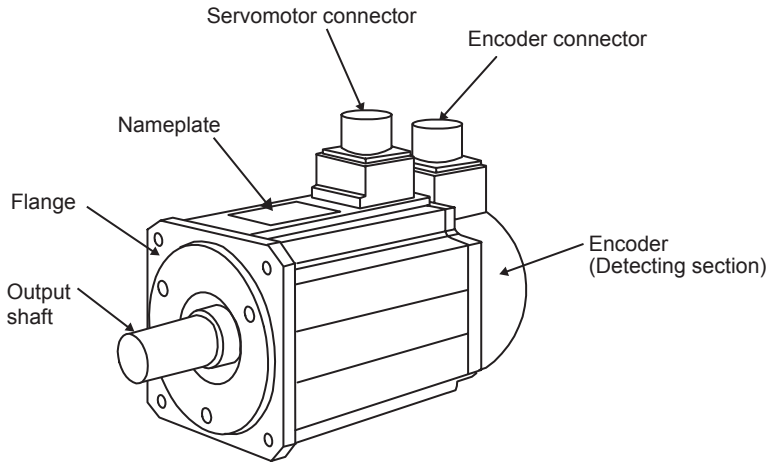

1.2.2 SERVOPACKs

(1) SGDH for 30 W to 5.0 kW

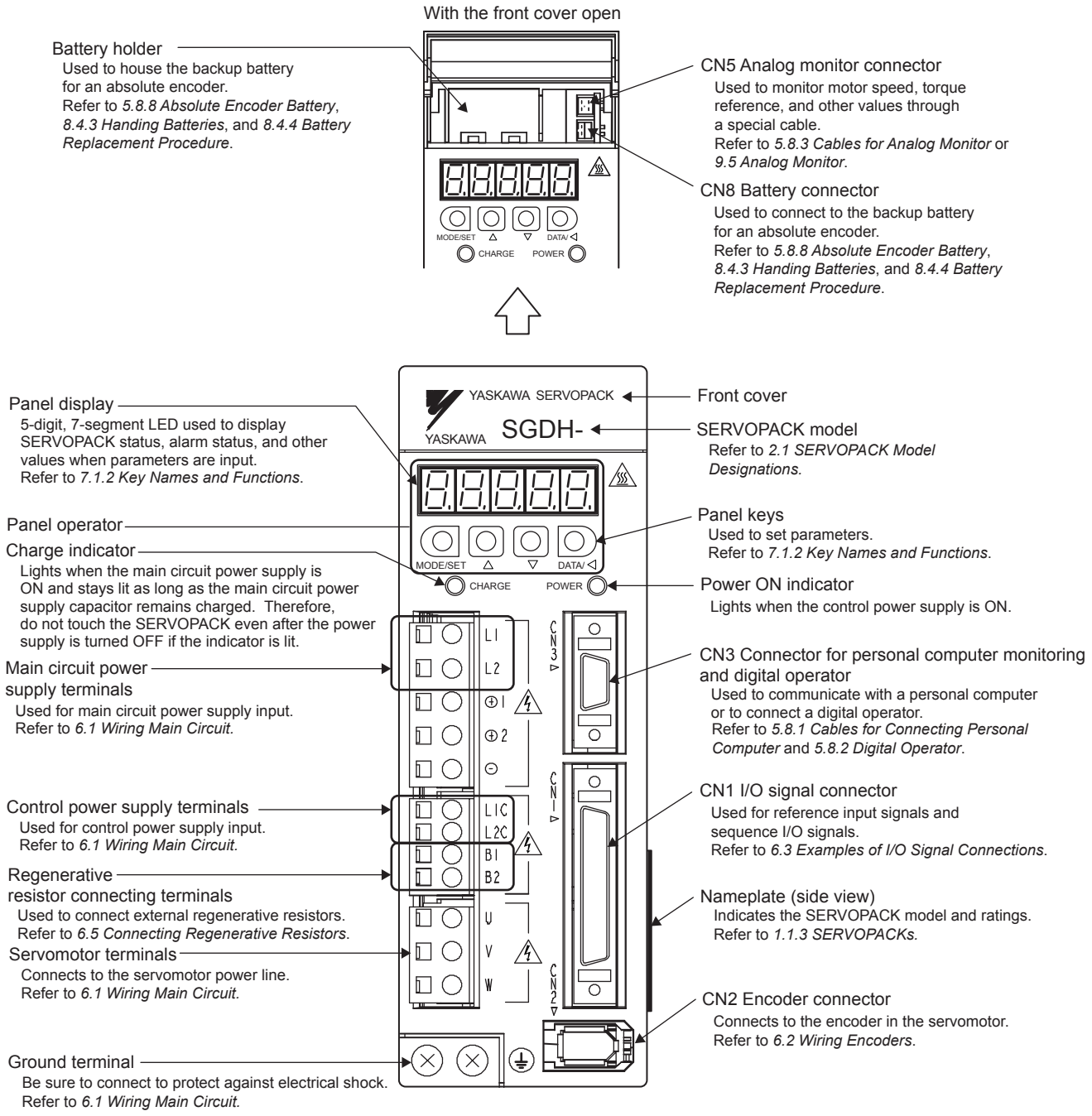

INFO

■ Connecting terminal of DC Reactor

For connecting a reactor, refer to *6.4.8 DC Reactor for Harmonic Suppression*.

(2) SGDH for 6.0 kW to 15.0 kW

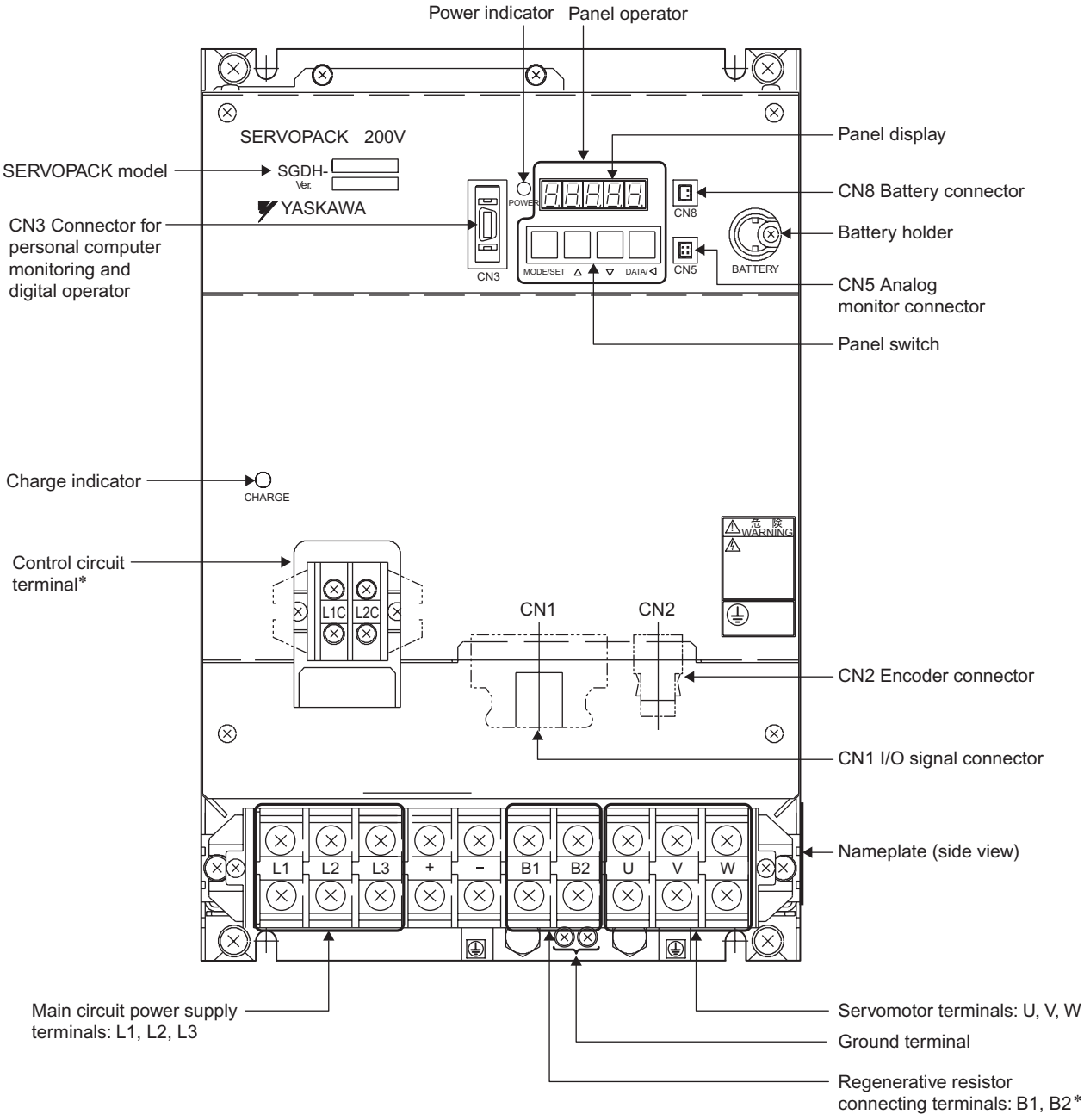

* Control circuit terminal and regenerative resistor connecting terminals differ the position of the terminal block by the SERVOPACK model.
Refer to *Chapter 4 SERVOPACK Specifications and Dimensional Drawings* for details.

SERVOPACK Model	Reference
SGDH-60AE, 75AE	4.7.7, 4.9.1
SGDH-60DE, 75DE	4.7.8, 4.9.2
SGDH-1AAE, 1EAE	4.7.9, 4.9.3
SGDH-1ADE, 1EDE	4.7.10, 4.9.4

1.3 Examples of Servo System Configurations

This section describes examples of basic servo system configuration.

1.3.1 Single-phase, 100 V, 200 V and 220 V Main Circuit

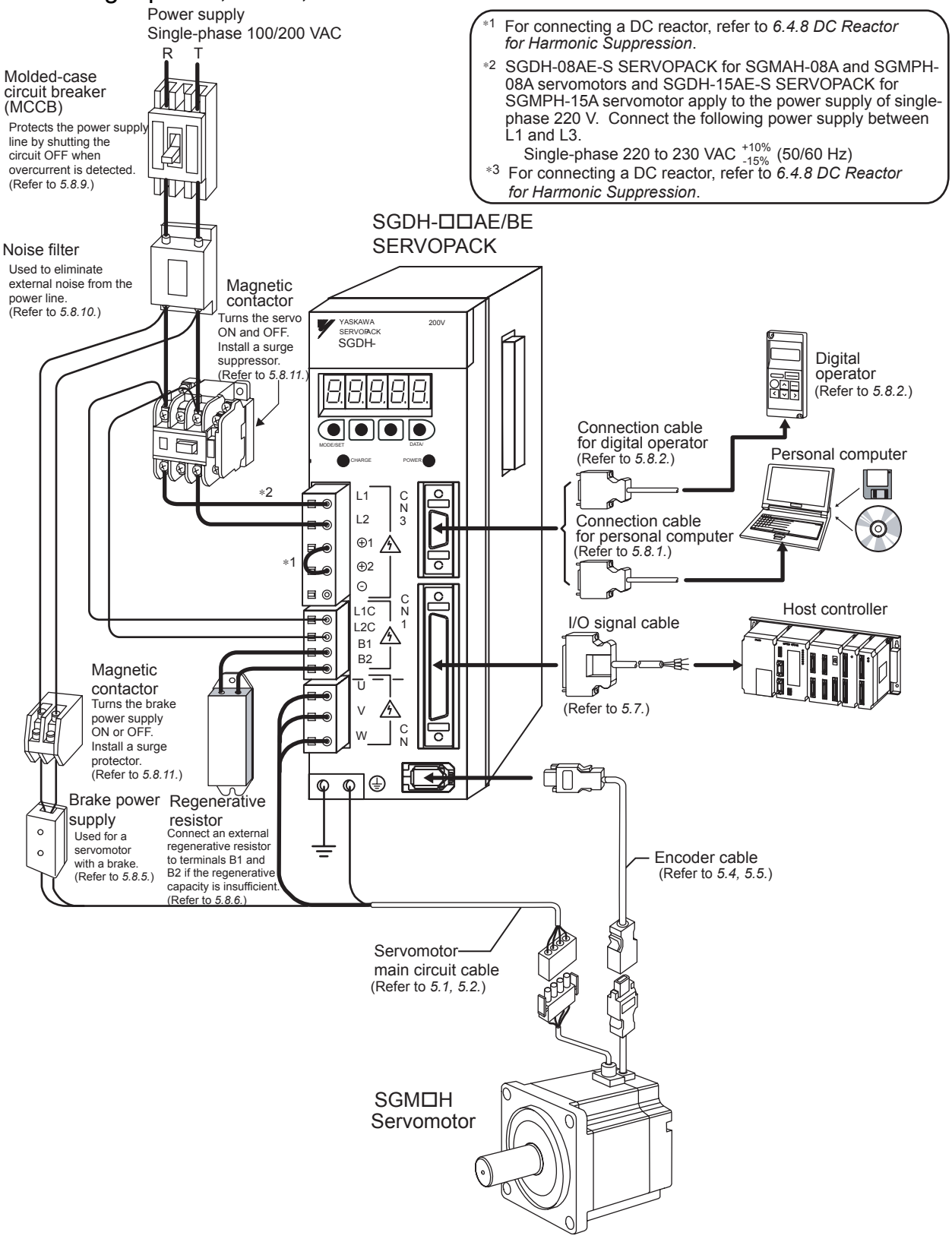

*1 For connecting a DC reactor, refer to *6.4.8 DC Reactor for Harmonic Suppression*.

*2 SGDH-08AE-S SERVOPACK for SGMAH-08A and SGMPH-08A servomotors and SGDH-15AE-S SERVOPACK for SGMPH-15A servomotor apply to the power supply of single-phase 220 V. Connect the following power supply between L1 and L3.
Single-phase 220 to 230 VAC $^{+10\%}_{-15\%}$ (50/60 Hz)

*3 For connecting a DC reactor, refer to *6.4.8 DC Reactor for Harmonic Suppression*.

1.3.2 Three-phase, 200 V Main Circuit

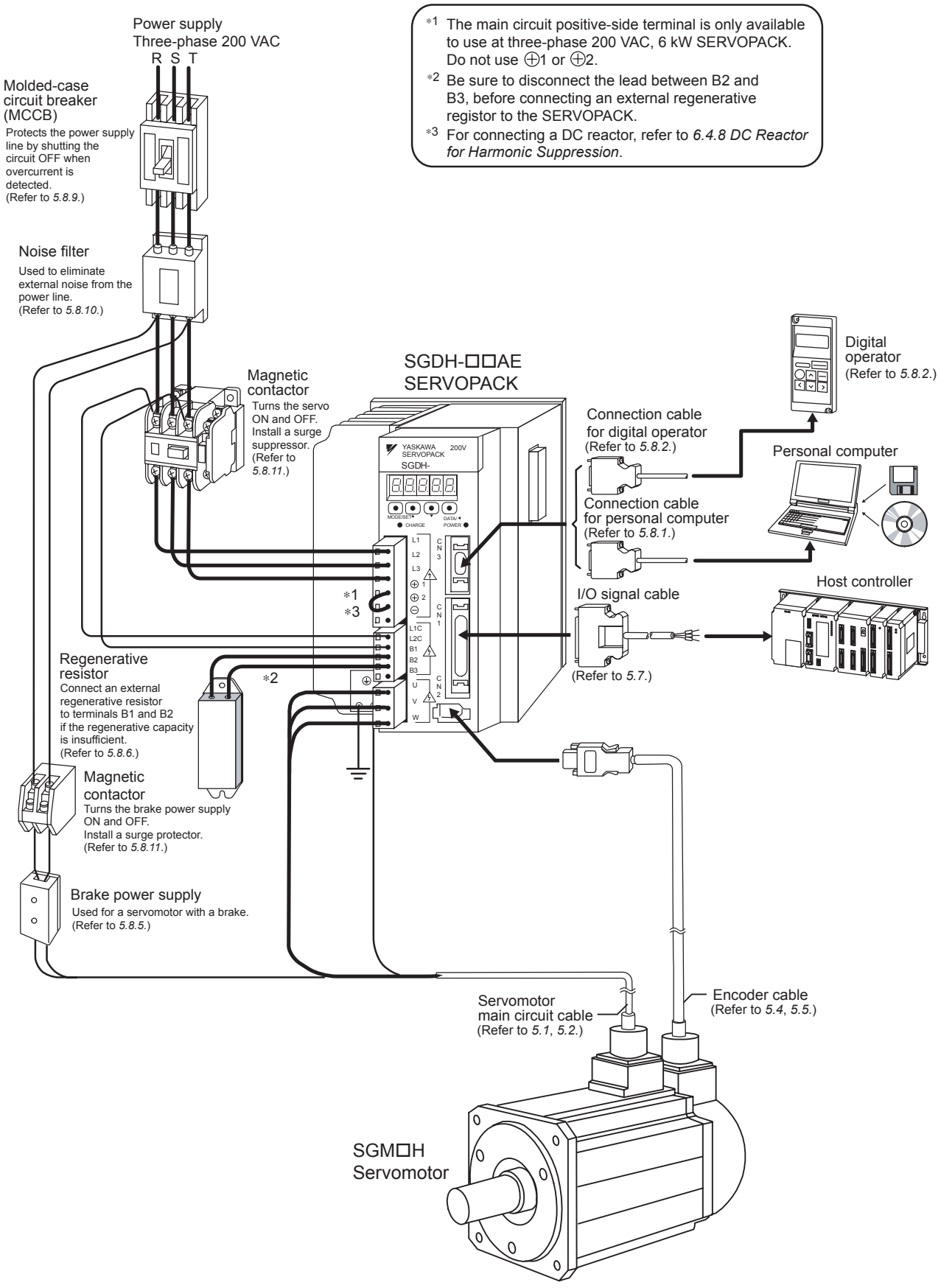

1.3.3 Three-phase, 400 V Main Circuit

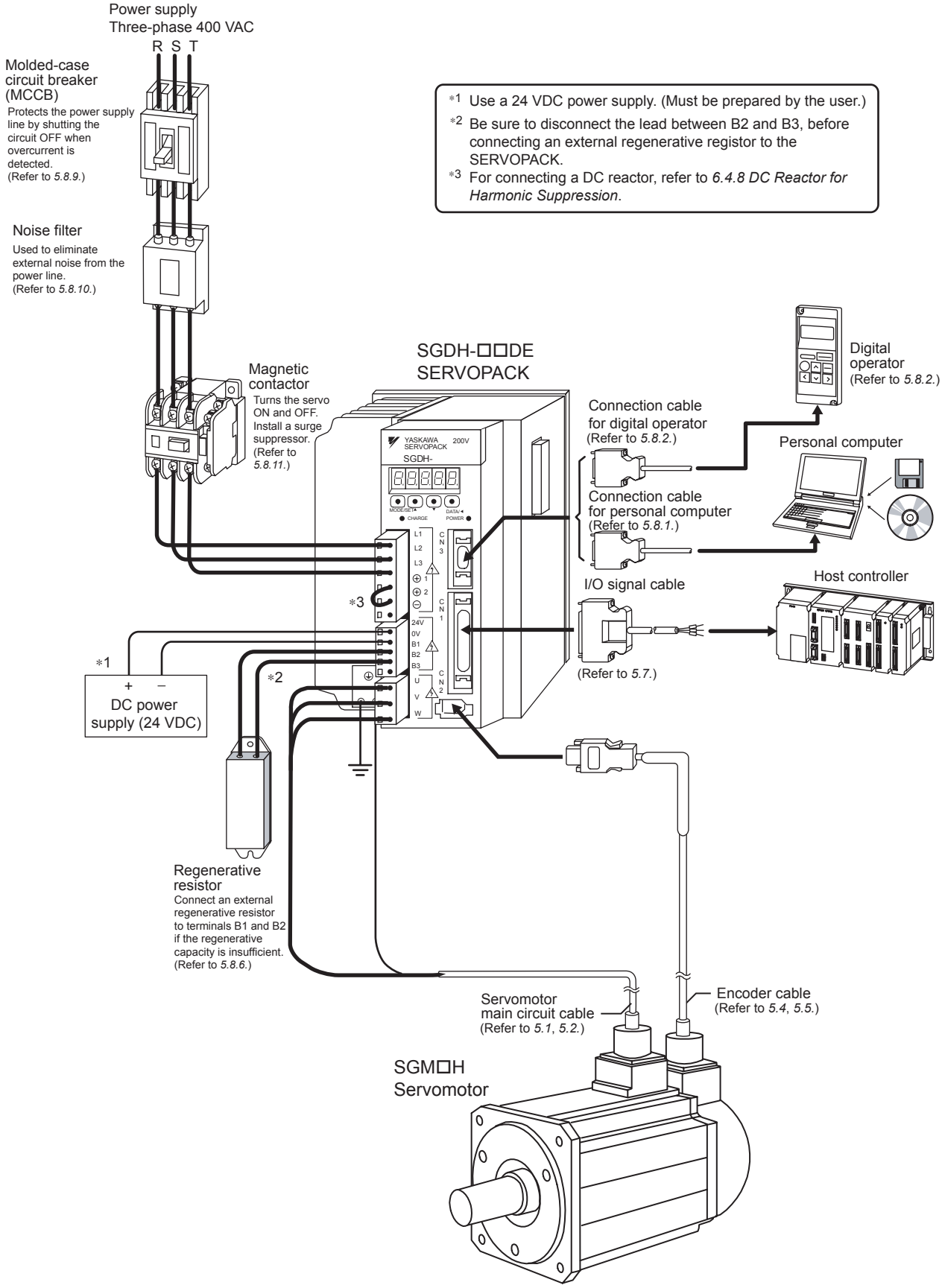

*1 Use a 24 VDC power supply. (Must be prepared by the user.)
*2 Be sure to disconnect the lead between B2 and B3, before connecting an external regenerative registor to the SERVOPACK.
*3 For connecting a DC reactor, refer to *6.4.8 DC Reactor for Harmonic Suppression*.

1.4 Applicable Standards

Σ-II Series servodrives conform to the following overseas standards.

1.4.1 North American Safety Standards (UL, CSA)

Model		UL*1 Standards (UL File No.)	CSA*2 Standards	Certifications
SERVOPACK	• SGDH	UL508C(E147823)	CSA C22.2 No.14	UL
Servomotor	• SGMAH • SGMPH • SGMGH • SGMSH • SGMDH • SGMUH*3	UL1004(E165827)	CSA C22.2 No.100	

* 1. Underwriters Laboratories Inc.
* 2. Canadian Standards Association.
* 3. SGMUH servomotors of 4.0 kW do not conform to these standards.

1.4.2 CE Marking

Model		Low Voltage Directive	EMC Directive		Certifications
			EMI	EMS	
SERVOPACK	• SGDH	EN50178	EN55011 class A group 1	EN50082-2 or EN61000-6-2	TÜV PS*
Servomotor	• SGMAH • SGMPH • SGMGH • SGMSH • SGMDH • SGMUH	IEC60034-1 IEC60034-5 IEC60034-8 IEC60034-9			

* TÜV Product Services GmbH

Note: For installation conditions, refer to *6.4.3 Installation Conditions of EMC Directives.* Because SERVOPACKs and servomotors are built-in type, reconfirmation is required after being installed in the final product.

2

Selections

2.1 Servomotor Model Designations - 2-2
2.1.1 Model SGMAH (3000 min^{-1}) - 2-2
2.1.2 Model SGMPH (3000 min^{-1}) - 2-4
2.1.3 Model SGMGH (1500 min^{-1}) - 2-6
2.1.4 Model SGMGH (1000 min^{-1}) - 2-8
2.1.5 Model SGMSH (3000 min^{-1}) - 2-10
2.1.6 Model SGMDH (2000 min^{-1}) - 2-12
2.1.7 Model SGMUH (6000 min^{-1}) - 2-13

2.2 Selecting Servomotors - 2-14
2.2.1 Support Tool for the Capacity Selection of the AC Servomotors - - - - 2-14
2.2.2 Servomotor Capacity Selection Examples - 2-14

2.3 SERVOPACK Model Designations - 2-15

2.4 Σ-II Series SERVOPACKs and Applicable Servomotors - - - 2-16

2.5 Selecting Cables - 2-17
2.5.1 Cables for SGMAH and SGMPH Servomotors - - - - - - - - - - - - - - - - 2-17
2.5.2 Cables for SGMGH/SGMSH/SGMDH/SGMUH Servomotors - - - - - - 2-22

2.6 Selecting Peripheral Devices - 2-26
2.6.1 Special Options - 2-26
2.6.2 Molded-case Circuit Breaker and Fuse Capacity - - - - - - - - - - - - - - - 2-29
2.6.3 Noise Filters, Magnetic Contactors, Surge Suppressors
and DC Reactors - 2-30
2.6.4 Regenerative Resistors and Brake Power Supply Units - - - - - - - - - - 2-31

2.1 Servomotor Model Designations

This section explains how to check the servomotor model and ratings. The alphanumeric codes after SGM□H indicate the specifications.

2.1.1 Model SGMAH (3000 min^{-1})

(1) Without Gears

	1st + 2nd digits	3rd digits	4th digits	5th digits	6th digits	7th digits
SGMAH –	02	A	A	A	2	1

1st + 2nd digits: Rated Output (kW)		3rd digit: Voltage A:200V,B:100V,D:400V		
Code	Rated Output	A	B	D
A3	0.03	○	○	–
A5	0.05	○	○	–
01	0.1	○	○	–
02	0.2	○	○	–
03	0.3	–	–	○
04	0.4	○	–	–
07	0.65	–	–	○
08	0.75	○	–	–

○: Available

7th digit: Brake and Oil Seal	
Code	Specifications
1	Without options
B	With 90-VDC brake
C	With 24-VDC brake
D	With oil seal and 90-VDC brake
E	With oil seal and 24-VDC brake
S	With oil seal

6th digit: Shaft End		
Code	Specifications	Remarks
2	Straight without key	Standard
4	Straight with key	Option
6	Straight with key and tap	
8	Straight with tap	

4th digit: Serial Encoder		
Code	Specifications	Remarks
1	16-bit absolute encoder *1	Standard
4	16-bit absolute encoder *1 with super capacitor	Option
A	13-bit incremental encoder *2	Standard
B	16-bit incremental encoder *1	Option

5th digit: Design Revision Order	
Code	Specifications
A	Fixed

*1. The number of encoder pulses: 16384 P/Rev.
*2. The number of encoder pulses: 2048 P/Rev.

(2) With Gears

1st + 2nd digits	3rd digit	4th digit	5th digit	6th digit	7th digit	8th digit	9th digit
01	A	A	A	H	1	2	B

SGMAH – 01 A A A H 1 2 B

1st + 2nd digits: Rated Output (kW)		3rd digit: Voltage A:200V,B:100V,D:400V		
Code	Rated Output	A	B	D
A3	0.03	○	○	–
A5	0.05	○	○	–
01	0.1	○	○	–
02	0.2	○	○	–
03	0.3	–	–	○
04	0.4	○	–	–
07	0.65	–	–	○
08	0.75	○	–	–

○: Available

4th digit: Serial Encoder		
Code	Specifications	Remarks
1	16-bit absolute encoder *1	Standard
4	16-bit absolute encoder *1 with super capacitor	Option
A	13-bit incremental encoder *2	Standard
B	16-bit incremental encoder *1	Option

*1 The number of encoder pulses: 16384 P/Rev.
*2 The number of encoder pulses: 2048 P/Rev.

5th digit: Design Revision Order	
Code	Specifications
A	Fixed

6th digit: Gear Type		8th digit: Shaft End Code
Code	Specifications	
G	HDS planetary low-backlash gear	0
H	HDS planetary low-backlash gear	2・6・8
J	Standard backlash gear	2・6

8th digit: (Shaft End Code): 2, 6

6th digit; Gear Type Code	7th digit: Gear Ratio		1st + 2nd + 3rd digits: Code of the Rated Output and Voltage					
	Code	Specifi-cations	A3A	A5A	01A	02A	04A	08A
			A3B	A5B	01B	02B		
J (Stan-dard)	1	1/5	○	○	○	○	○	○
	3	3/31	○	○	○	○	○	○
	7	1/33	○	○	○	○	○	○
	C	1/21	○	○	○	○	○	○

○: Available

9th digit: Brake	
Code	Specifications
1	Without brake
B	With 90-VDC brake
C	With 24-VDC brake

8th digit: Shaft End		6th digit: Gear Type Code		
Code	Specifications	G	H	J
0	No shaft	○	–	–
2	Straight without key	○	○	○
6	Straight with key and tap	○	○	○
8	Straight with tap	○	○	–

○: Available

8th digit: (Shaft End Code): 0

6th digit; Gear Type Code	7th digit: Gear Ratio		1st + 2nd + 3rd digits: Code of the Rated Output and Voltage					
	Code	Specifi-cations	A3A	A5A	01A	02A	04A	08A
			A3B	A5B	01B	02B	–	–
			–	–	–	–	03D	07D
G (Low-back-lash)	1	1/5	○	○	○	○	○	○
	2	1/9	○	○	–	–	–	–
	7	1/33	○	○	○	○	○	○
	B	1/11	–	–	○	○	○	○
	C	1/21	○	○	○	○	○	○

○: Available

8th digit: (Shaft End Code): 2, 6, 8

6th digit; Gear Type Code	7th digit: Gear Ratio		1st + 2nd + 3rd digits: Code of the Rated Output and Voltage					
	Code	Specifi-cations	A3A	A5A	01A	02A	04A	08A
			A3B	A5B	01B	02B	–	–
			–	–	–	–	03D	07D
H (Low-back-lash)	1	1/5	○	○	○	○	○	○
	2	1/9	○	○	–	–	–	–
	7	1/33	○	○	○	○	○	○
	B	1/11	–	–	○	○	○	○
	C	1/21	○	○	○	○	○	○

○: Available

2.1.2 Model SGMPH (3000 min^{-1})

(1) Without Gears

1st + 2nd digits	3rd digit	4th digit	5th digits	6th digit	7th digit
SGMPH – 02	A	A	A	2	1

1st + 2nd digits: Rated Output (kW)		3rd digit: Voltage A:200V,B:100V,D:400V		
Code	Rated Output	A	B	D
01	0.1	○	○	–
02	0.2	○	○	○
04	0.4	○	–	○
08	0.75	○	–	○
15	1.5	○	–	○

○: Available

4th digit: Serial Encoder		
Code	Specifications	Remarks
1	16-bit absolute encoder *1	Standard
4	16-bit absolute encoder *1 with super capacitor	Option
A	13-bit incremental encoder*2	Standard
B	16-bit incremental encoder*1	Option

*1 The number of encoder pulses: 16384 P/Rev.
*2 The number of encoder pulses: 2048 P/Rev.

5th digits: Design Revision Order	
Code	Specifications
A	Fixed
E	IP67 water-proof specifications

6th digit: Shaft End		
Code	Specifications	Remarks
2	Straight without key	Standard
4	Straight with key	Option
6	Straight with key and tap	
8	Straight with tap	

7th digit: Brake and Oil Seal	
Code	Specifications
1	Without options
B	With 90-VDC brake
C	With 24-VDC brake
D	With oil seal and 90-VDC brake
E	With oil seal and 24-VDC brake
S	With oil seal

(2) With Gears

1st + 2nd digits	3rd digits	4th digits	5th digits	6th digits	7th digits	8th digits	9th digits
SGMPH – 01	A	A	A	H	1	2	B

1st + 2nd digit: Rated Output (kW)		3rd digit: Voltage A:200V,B:100V,D:400V		
Code	Rated Output	A	B	D
01	0.1	○	○	–
02	0.2	○	○	○
04	0.4	○	–	–
08	0.75	○	–	○
15	1.5	○	–	○

○: Available

4th digit: Serial Encoder		
Code	Specifications	Remarks
1	16-bit absolute encoder *1	Standard
4	16-bit absolute encoder *1 with super capacitor	Option
A	13-bit incremental encoder*2	Standard
B	16-bit incremental encoder*1	Option

*1 The number of encoder pulses: 16384 P/Rev.
*2 The number of encoder pulses: 2048 P/Rev.

5th digit: Design Revision Order	
Code	Specifications
A	Fixed
E	IP67 water-proof specifications

6th digit: Gear Type		8th digit: Shaft End Code
Code	Specifications	
G	HDS planetary low-backlash gear	0
H	HDS planetary low-backlash gear	2・6・8
J	Standard backlash gear	2・6

(2) Rated Output1.5 kW

① 8th digit (Shaft End Code): 0

6 digit: Gear Type Code	7th digit: Gear Ratio		1st + 2nd + 3rd digits: Code of the Rated Output and Voltage
	Code	Specifications	15A / 15D
G (Low-back-lash)	1	1/5	–
	7	1/33	○
	B	1/11	–
	C	1/21	○

○: Available

② 8th digit (Shaft End Code): 2, 6, 8

6 digit: Gear Type Code	7th digit: Gear Ratio		1st + 2nd + 3rd digits: Code of the Rated Output and Voltage
	Code	Specifications	15A / 15D
H (Low-back-lash)	1	1/5	○
	7	1/33	–
	B	1/11	○
	C	1/21	–

○: Available

9th digit: Brake	
Code	Specifications
1	Without brake
B	With 90-VDC brake
C	With 24-VDC brake

8th digit: Shaft End		6th digit: Gear TypeCode		
Code	Specifications	G	H	J
0	No shaft	○	–	–
2	Straight without key	–	○	○
6	Straight with key and tap	–	○	○
8	Straight with tap	–	○	–

○: Available

(1) Rated Output: 0.1 kW to 0.75 kW

① 8th digit (Shaft End Code): 0

6 digit: Gear Type Code	7th digit: Gear Ratio		1st + 2nd + 3rd digits: Code of the Rated Output and Voltage			
	Code	Specifications	01A / 01B / –	02A / 02B / 02D	04A / – / 04D	08A / – / 08D
G (Low-back-lash)	1	1/5	○	○	○	○
	7	1/33	○	○	○	○
	B	1/11	○	○	○	○
	C	1/21	○	○	○	○

○: Available

②8th digit (Shaft End Code): 2, 6, 8

6 digit: Gear Type Code	7th digit: Gear Ratio		1st + 2nd + 3rd digits: Code of the Rated Output and Voltage			
	Code	Specifications	01A / 01B / –	02A / 02B / 02D	04A / – / 04D	08A / – / 08D
H (Low-back-lash)	1	1/5	○	○	○	○
	7	1/33	○	○	○	○
	B	1/11	○	○	○	○
	C	1/21	○	○	○	○

○: Available

8th digit (Shaft End Code): 2, 6

6 digit: Gear Type Code	7th digit: Gear Ratio		1st + 2nd + 3rd digits: Code of the Rated Output and Voltage				
	Code	Specifications	01A / 01B / –	02A / 02B / 02D	04A / – / 04D	08A / – / 08D	15A / – / 15D
H (Low-back-lash)	1	1/5	○	○	○	○	○
	3	3/31	○	○	○	○	○
	7	1/33	○	○	○	○	○
	C	1/21	○	○	○	○	○

○: Available

2.1.3 Model SGMGH (1500 min^{-1})

(1) Without Gears

1st + 2nd digits	3rd digit	4th digit	5th digit	6th digit	7th digit
SGMGH –13	A	C	A	2	1

1st + 2nd digits: Rated Output (kW)		3rd digit: Voltage A:200V,D:400V	
Code	Rated Output	A	D
05	0.45	○	○
09	0.85	○	○
13	1.3	○	○
20	1.8	○	○
30	2.9	○	○
44	4.4	○	○
55	5.5	○	○
75	7.5	○	○
1A	11.0	○	○
1E	15.0	○	○

○: Available

7th digit: Brake and Oil Seal	
Code	Specifications
1	Without options
B	With 90-VDC brake
C	With 24-VDC brake
D	With oil seal and 90-VDC brake
E	With oil seal and 24-VDC brake
S	With oil seal

6th digit: Shaft End		
Code	Specifications	Remarks
2	Straight without key	Standard
3	Taper 1/10, with parallel key	Option
5	Taper 1/10, with woodruff key	
6	Straight with key and tap	

4th digit: Serial Encoder		
Code	Specifications	Remarks
2	17-bit absolute encoder *	Standard
C	17-bit incremental encoder *	

* The number of encoder pulses: 32768 P/Rev.

5th digit: Design Revision Order	
Code	Specifications
A	Standard
C	For high-performance machine tool (4.4 kW or less)

(2) With Gears

1st + 2nd digits	3rd digits	4th digits	5th digits	6th digits	7th digits	8th digits	9th digits
SGMGH – 20	A	C	A	L	1	4	B

9th digit: Brake	
Code	Specifications
1	Without brake
B	With 90-VDC brake
C	With 24-VDC brake

8th digit: Shaft End		6th digit: Gear Type Code		
Code	Specifications	L	S	T
4	Straight with key	○	–	–
6	Straight with key and tap	–	○	○

○: Available

1st + 2nd digits: Rated Output (kW)		3rd digit: Voltage A:200V,D:400V	
Code	Rated Output	A	D
05	0.45	○	○
09	0.85	○	○
13	1.3	○	○
20	1.8	○	○
30	2.9	○	○
44	4.4	○	○
55	5.5	○	○
75	7.5	○	○
1A	11.0	○	○

○: Available

6th digit: Gear Type	
Code	Specifications
L	IMT planetary low-backlash gear (Flange type)
S	Standard backlash gear (Foot mounting type)
T	Standard backlash gear (Flange type)

5th digit: Design Revision Order	
Code	Specifications
A	Standard
C	For high-performance machine tool

4th digit: Serial Encoder		
Code	Specifications	Remarks
2	17-bit absolute encoder *	Standard
C	17-bit incremental encoder *	

* The number of encoder pulses: 32768 P/Rev.

6th digit: Gear Type Code	7th digit: Gear Ratio		1st + 2nd + 3rd digits: Code of the Rated Output and Voltage											
	Code	Specifications	05A	05D	09A	09D	13A	13D	20A	20D	30A	30D	44A	44D
L (Low-backlash)	1	1/5	○	○	○	○	○	○	○	○	○	○	○	–
	2	1/9	○	○	○	○	○	○	○	○	○	○	○	–
	5	1/20	○	○	○	○	○	○	○	○	○	○	–	–
	7	1/29	○	○	○	○	○	○	○	○	–	–	–	–
	8	1/45	○	○	○	○	○	○	–	–	–	–	–	–

○: Available

6th digit: Gear Type Code	7th digit: Gear Ratio		1st + 2nd + 3rd digits: Code of the Rated Output and Voltage															
	Code	Specifications	05A	05D	09A	09D	13A	13D	20A	20D	30A	30D	44A	44D	55A	55D	75A	75D
S (Stan-dard)	A	1/6	○	○	○	○	○	○	○	○	○	○	○	○	○	○	–	–
	B	1/11	○	○	○	○	○	○	○	○	○	○	○	○	○	○	○	○
	C	1/21	○	○	○	○	○	○	○	○	○	○	○	○	○	○	○	○
	7	1/29	○	○	○	○	○	○	○	○	○	○	○	○	○	○	○	○

○: Available

6th digit: Gear Type Code	7th digit: Gear Ratio		1st + 2nd + 3rd digits: Code of the Rated Output and Voltage															
	Code	Specifications	05A	05D	09A	09D	13A	13D	20A	20D	30A	30D	44A	44D	55A	55D	75A	75D
T (Stan-dard)	A	1/6	○	○	○	○	○	○	○	○	○	○	○	○	○	○	–	–
	B	1/11	○	○	○	○	○	○	○	○	○	○	○	○	○	○	○	○
	C	1/21	○	○	○	○	○	○	○	○	○	○	○	○	○	○	○	○
	7	1/29	○	○	○	○	○	○	○	○	○	○	○	○	○	○	○	○

○: Available

2.1.4 Model SGMGH (1000 min^{-1})

(1) Without Gears

1st + 2nd digits	3rd digits	4th digits	5th digits	6th digits	7th digits
SGMGH – 12	A	C	B	2	1

1st + 2nd digits: Rated Output (kW)		3rd digit: Voltage □ A: 200V
Code	Rated Output	A
03	0.3	○
06	0.6	○
09	0.9	○
12	1.2	○
20	2.0	○
30	3.0	○
40	4.0	○
55	5.5	○

○: Available

7th digit: Brake and Oil Seal	
Code	Specifications
1	Without options
B	With 90-VDC brake
C	With 24-VDC brake
D	With oil seal and 90-VDC brake
E	With oil seal and 24-VDC brake
S	With oil seal

6th digit: Shaft End		
Code	Specifications	Remarks
2	Straight without key	Standard
3	Taper 1/10, with parallel key	Option
5	Taper 1/10, with woodruff key	
6	Straight with key and tap	

4th digit: Serial Encoder		
Code	Specifications	Remarks
2	17-bit absolute encoder*	Standard
C	17-bit incremental encoder*	

* The number of encoder pulses: 32768 P/Rev.

5th digit: Design Revision Order	
Code	Specifications
B	Standard
D	For high-performance machine tool

(2) With Gears

1st + 2nd digits	3rd digits	4th digits	5th digits	6th digits	7th digits	8th digits	9th digits
SGMGH – 20	A	C	B	L	B	4	B

9th digit: Brake	
Code	Specifications
1	Without brake
B	With 90-VDC brake
C	With 24-VDC brake

8th digit: Shaft End		6th digit: Gear Type Code		
Code	Specifications	L	S	T
4	Straight with key	○	–	–
6	Straight with key and tap	–	○	○

○: Available

1st + 2nd digits: Rated Output (kW)		3rd digit: Voltage A:200V
Code	Rated Output	A
03	0.3	○
06	0.6	○
09	0.9	○
12	1.2	○
20	2.0	○
30	3.0	○
40	4.0	○
55	5.5	○

○: Available

6th digit: Gear Type	
Code	Specifications
L	IMT planetary low-backlash gear (Flange type)
S	Standard backlash gear (Foot mounting type)
T	Standard backlash gear (Flange type)

5th digit: Design Revision Order	
Code	Specifications
B	Standard
D	For high-performance machine tool

4th digit: Serial Encoder		
Code	Specifications	Remarks
2	17-bit absolute encoder *	Standard
C	17-bit incremental encoder *	

* The number of encoder pulses: 32768 P/Rev.

6th digit: Gear Type Code	7th digit: Gear Ratio		1st + 2nd + 3rd digits: Code of the Rated Output and Voltage							
	Code	Specifications	03A	06A	09A	12A	20A	30A	40A	55A
L (Low-backlash)	1	1/5	○	○	○	○	○	○	–	–
	2	1/9	○	○	○	○	○	○	–	–
	5	1/20	○	○	○	○	○	–	–	–
	7	1/29	○	○	○	○	–	–	–	–
	8	1/45	○	○	○	○	–	–	–	–

○: Available

6th digit: Gear Type Code	7th digit: Gear Ratio		1st + 2nd + 3rd digits: Code of the Rated Output and Voltage							
	Code	Specifications	03A	06A	09A	12A	20A	30A	40A	55A
S (Standard)	A	1/6	○	○	○	○	○	○	○	–
	B	1/11	○	○	○	○	○	○	○	○
	C	1/21	○	○	○	○	○	○	○	○
	7	1/29	○	○	○	○	○	○	○	○

○: Available

6th digit: Gear Type Code	7th digit: Gear Ratio		1st + 2nd + 3rd digits: Code of the Rated Output and Voltage							
	Code	Specifications	03A	06A	09A	12A	20A	30A	40A	55A
T (Standard)	A	1/6	○	○	○	○	○	○	○	–
	B	1/11	○	○	○	○	○	○	○	○
	C	1/21	○	○	○	○	○	○	○	○
	7	1/29	○	○	○	○	○	○	○	○

○: Available

2.1.5 Model SGMSH (3000 min^{-1})

(1) Without Gears

1st + 2nd digits	3rd digits	4th digits	5th digits	6th digits	7th digits
SGMSH – 10	A	C	A	2	1

1st + 2nd digits: Rated Output (kW)		3rd digit: Voltage A:200V,D:400V	
Code	Rated Output	A	D
10	1.0	○	○
15	1.5	○	○
20	2.0	○	○
30	3.0	○	○
40	4.0	○	○
50	5.0	○	○

○: Available

7th digit: Brake and Oil Seal	
Code	Specifications
1	Without options
B	With 90-VDC brake
C	With 24-VDC brake
D	With oil seal and 90-VDC brake
E	With oil seal and 24-VDC brake
S	With oil seal

6th digit: Shaft End		
Code	Specifications	Remarks
2	Straight without key	Standard
3	Taper 1/10, with parallel key	Option
6	Straight with key and tap	

4th digit: Serial Encoder		
Code	Specifications	Remarks
2	17-bit absolute encoder*	Standard
C	17-bit incremental encoder*	

* The number of encoder pulses: 32768 P/Rev.

5th digit: Design Revision Order	
Code	Specifications
A	Fixed

(2) With Gears

1st + 2nd digits	3rd digit	4th digit	5th digit	6th digit	7th digit	8th digit	9th digit
SGMSH – 10	A	C	A	L	1	4	B

1st + 2nd digits: Rated Output (kW)		3rd digit: Voltage A:200V,D:400V	
Code	Rated Output	A	D
10	1.0	○	○
15	1.5	○	○
20	2.0	○	○
30	3.0	○	○
40	4.0	○	○
50	5.0	○	○

○: Available

4th digit: Serial Encoder		
Code	Specifications	Remarks
2	17-bit absolute encoder *	Standard
C	17-bit incremental encoder *	

* The number of encoder pulses: 32768 P/Rev.

5th digit: Design Revision Order	
Code	Specifications
A	Fixed

6th digit: Gear Type		
Code	Specifications	
L	IMT planetary low-backlash gear (Flange type)	

9th digit: Brake	
Code	Specifications
1	Without brake
B	With 90-VDC brake
C	With 24-VDC brake

8th digit: Shaft End	
Code	Specifications
4	Straight with key

6th digit: Gear Type Code	7th digit: Gear Ratio		1st + 2nd + 3rd digits: Code of the Rated Output and Voltage					
	Code	Specifications	10A	15A	20A	30A	40A	50A
			10D	15D	20D	30D	40D	50D
L (Low-backlash)	1	1/5	○	○	○	○	○	○
	2	1/9	○	○	○	○	○	○
	5	1/20	○	○	○	○	○	○
	7	1/29	○	○	○	○	○	–
	8	1/45	○	○	○	○	–	–

○: Available

2.1.6 Model SGMDH (2000 min^{-1})

- SGMDH servomotors are provided with 90-VDC brakes as standard. (The seventh digit: B)
- Servomotors with backlash gears are not available for the model SGMDH.

1st + 2nd digits	3rd digits	4th digits	5th digits	6th digits	7th digits
SGMDH – 22	A	C	A	2	B

1st + 2nd digits: Rated Output (kW)		3rd digit: Voltage A:200V,D:400V
Code	Rated Output	A
22	2.2	○
32	3.2	○
40	4.0	○

○: Available

4th digit: Serial Encoder		
Code	Specifications	Remarks
2	17-bit absolute encoder *	Standard
C	17-bit incremental encoder *	

* The number of encoder pulses: 32768 P/Rev.

7th digit: Brake and Oil Seal		
Code	Specifications	Remarks
1	Without options	–
B	With 90-VDC brake	Standard
C	With 24-VDC brake	–
D	With oil seal and 90-VDC brake	–
E	With oil seal and 24-VDC brake	–
S	With oil seal	–

6th digit: Shaft End		
Code	Specifications	Remarks
2	Straight without key	Standard
6	Straight with key and tap	Option

5th digit: Design Revision Order	
Code	Specifications
A	Fixed

2.1.7 Model SGMUH (6000 min^{-1})

- Servomotors with backlash gears are not available for the model SGMUH.

1st + 2nd digits	3rd digits	4th digits	5th digits	6th digits	7th digits
SGMUH – 10	D	C	A	2	1

1st + 2nd digits: Rated Output (kW)		3rd digit: Voltage D:400V
Code	Rated Output	D
10	1.0	○
15	1.5	○
30	3.0	○
40	4.0	○

○: Available

4th digit: Serial Encoder		
Code	Specifications	Remarks
C	17-bit incremental encoder *	Standard

* The number of encoder pulses: 32768 P/Rev.

7th digit: Brake and Oil Seal	
Code	Specifications
1	Without options
B	With 90-VDC brake
C	With 24-VDC brake
D	With oil seal and 90-VDC brake
E	With oil seal and 24-VDC brake
S	With oil seal

6th digit: Shaft End		
Code	Specifications	Remarks
2	Straight without key	Standard
3	Taper 1/10, with parallel key	Option
6	Straight with key and tap	

5th digit: Design Revision Order	
Code	Specifications
A	Fixed

2

2.2 Selecting Servomotors

2.2.1 Support Tool for the Capacity Selection of the AC Servomotors

For easy selection of the capacity of the AC servomotors, a CD-ROM is available as a support tool.

- CD-ROM: Programming for the capacity selection on AC servomotor

(a) The display examples of the capacity calculation

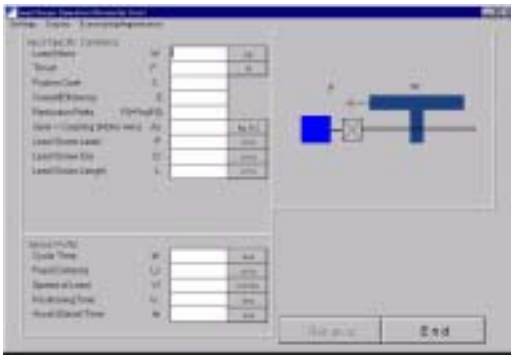

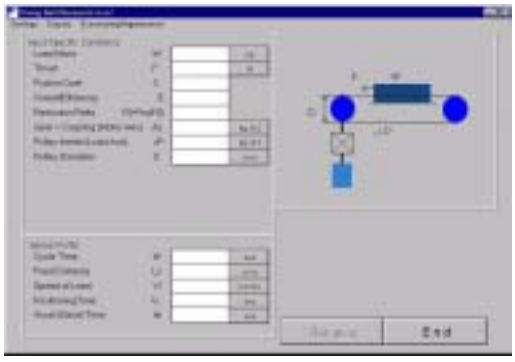

(b) The display example of the regenerative calculation

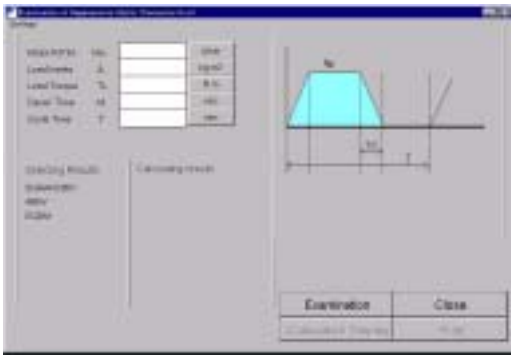

(c) The display example of the moment of inertia calculation

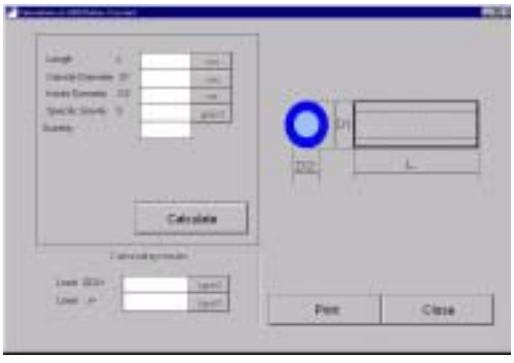

2.2.2 Servomotor Capacity Selection Examples

Refer to *11.1 Servomotor Capacity Selection Examples*.

2.3 SERVOPACK Model Designations

Select the SERVOPACK according to the applied servomotor.

	1st + 2nd digits	3rd digits	4th digits	5th digits
SGDH -	10	A	E	□

1st + 2nd digits: Rated Output of Applicable Servomotor (kW)			
Code	Rated Output	Code	Rated Output
A3	0.03	15	1.5
A5	0.05	20	2.0
01	0.10	30	3.0
02	0.20	50	5.0
04	0.40	60	6.0
05	0.45	75	7.5
08	0.75	1A	11.0
10	1.0	1E	15.0

3rd digit: Power Supply Voltage	
Code	Voltage
A	Single/Three-phase, 200V
B	Single-phase, 100V
D	Three-phase, 400V

4th digit: Model (Fixed)	
Code	Remarks
E	· For torque, speed, and position control · Applicable for various application modules

5th digit: Mounting Method		
Code	Specificatioins	Rated Output of Applicable Servomotor (kW)
–	Base-mounted	0.03 to 15.0
-P	Duct-ventilated	5.5 to 15.0
-R	Rack-mounted	0.03 to 5.0
-S	Base-mounted	Available only for the following servomotors with single-phase 220 to 230 V power supply. SGMAH: 0.75 SGMPH: 0.75 or 1.5
-S-R	Rack-mounted	

2.4 Σ-II Series SERVOPACKs and Applicable Servomotors

Table 2.1 SERVOPACKs and Applicable Servomotors

Σ-II Series SGM□H Servomotor		Σ-II Series SGDH SERVOPACK			
		Single-phase 100 VAC	Single-phase 200 VAC	Three-phase 200 VAC	Three-phase 400 VAC
SGMAH (Super High Power Capacity) 3000min^{-1} 8 models	A3□(30 W)	A3BE	A3AE	–	–
	A5□ (50 W)	A5BE	A5AE		–
	01□ (100 W)	01BE	01AE	–	–
	02□ (200 W)	02BE	02AE	–	–
	03□ (300 W)	–	–	–	05DE
	04□ (400 W)	–	04AE	–	–
	07□ (650 W)	–	–	–	10DE
	08□ (750 W)	–	08AE-S	08AE	–
SGMPH (Flat Type) 3000min^{-1} 5 models	01□ (100 W)	01BE	01AE	–	–
	02□ (200 W)	02BE	02AE	–	05DE
	04□ (400 W)	–	04AE	–	05DE
	08□ (750 W)	–	08AE-S	08AE	10DE
	15□ (1.5 kW)	–	15AE-S	15AE	15DE
SGMGH (High Speed Feed) 1500min^{-1} 10 models	05□ (450 W)	–	–	05AE	05DE
	09□ (850 W)	–	–	10AE	10DE
	13□ (1.3 kW)	–	–	15AE	15DE
	20□ (1.8 kW)	–	–	20AE	20DE
	30□ (2.9 kW)	–	–	30AE	30DE
	44□ (4.4 kW)	–	–	50AE	50DE
	55□ (5.5 kW)	–	–	60AE	60DE
	75□ (7.5 kW)	–	–	75AE	75DE
	1A□ (11.0 kW)	–	–	1AAE	1ADE
	1E□ (15.0 kW)	–	–	1EAE	1EDE
SGMGH (High Speed Feed) 1000min^{-1} 8 models	03□ (300 W)	–	–	05AE	–
	06□ (600 W)	–	–	08AE	–
	09□ (900 W)	–	–	10AE	–
	12□ (1.2 kW)	–	–	15AE	–
	20□ (2.0 kW)	–	–	20AE	–
	30□ (3.0 kW)	–	–	30AE	–
	40□ (4.0 kW)	–	–	50AE	–
	55□ (5.5 kW)	–	–	60AE	–
SGMSH (Super High Power Capacity) 3000min^{-1} 6 models	10□ (1.0 kW)	–	–	10AE	10DE
	15□ (1.5 kW)	–	–	15AE	15DE
	20□ (2.0 kW)	–	–	20AE	20DE
	30□ (3.0 kW)	–	–	30AE	30DE
	40□ (4.0 kW)	–	–	50AE	50DE
	50□ (5.0 kW)	–	–	50AE	50DE
SGMDH (Flat Type) 2000min^{-1} 3 models	22□ (2.2 kW)	–	–	30AE	–
	32□ (3.2 kW)	–	–	50AE	–
	40□ (4.0 kW)	–	–	50AE	–
SGMUH (High Speed Type) 6000min^{-1} 4 models	10□ (1.0 kW)	–	–	–	10DE
	15□ (1.5 kW)	–	–	–	15DE
	30□ (3.0 kW)	–	–	–	30DE
	40□ (4.0 kW)	–	–	–	50DE

Note: 1. □=A: 200 V, B: 100 V, D: 400 V (Be sure to match the voltage ratio on the servomotor and the SERVOPACK.)

2. Servomotors with low-backlash gears are available.

2.5 Selecting Cables

2.5.1 Cables for SGMAH and SGMPH Servomotors

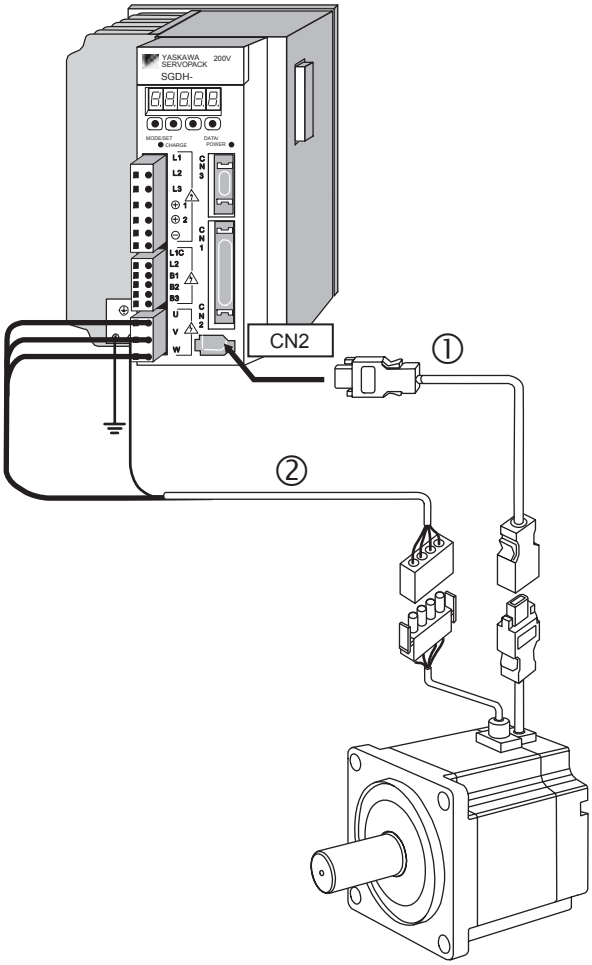

Name		Length	Type	Specifications	Reference
① CN2 Encoder Cable	Cable with connectors at both ends	3 m (9.84 ft)	JZSP-CMP00-03	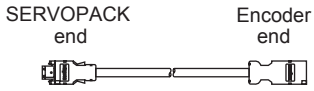	5.4.1
		5 m (16.4 ft)	JZSP-CMP00-05		
		10 m (32.8 ft)	JZSP-CMP00-10		
		15 m (49.2 ft)	JZSP-CMP00-15		
		20 m (65.6 ft)	JZSP-CMP00-20		
	Cable with loose wire at encoder end	3 m (9.84 ft)	JZSP-CMP03-03	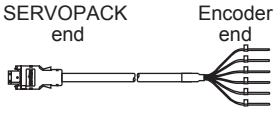	5.4.3
		5 m (16.4 ft)	JZSP-CMP03-05		
		10 m (32.8 ft)	JZSP-CMP03-10		
		15 m (49.2 ft)	JZSP-CMP03-15		
		20 m (65.6 ft)	JZSP-CMP03-20		
	Flexible type cable with connectors at both ends	3 m (9.84 ft)	JZSP-CMP10-03	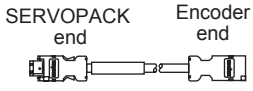	5.4.5
		5 m (16.4 ft)	JZSP-CMP10-05		
		10 m (32.8 ft)	JZSP-CMP10-10		
		15 m (49.2 ft)	JZSP-CMP10-15		
		20 m (65.6 ft)	JZSP-CMP10-20		
	Flexible type cable with loose wire at encoder end	3 m (9.84 ft)	JZSP-CMP13-03	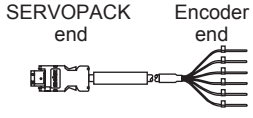	
		5 m (16.4 ft)	JZSP-CMP13-05		
		10 m (32.8 ft)	JZSP-CMP13-10		
		15 m (49.2 ft)	JZSP-CMP13-15		
		20 m (65.6 ft)	JZSP-CMP13-20		

Name		Length	Type	Specifications	Reference
① CN2 Encoder Cable (Cont'd)	SERVOPACK end connector kit		JZSP-CMP9-1	Soldered 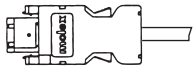	5.5.1
	Encoder end connector kit		JZSP-CMP9-2	Soldered	5.4.3 5.4.5 5.5.1
	Cables	5 m (16.4 ft)	JZSP-CMP09-05	20 m (65.6 ft) max. 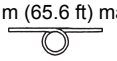	5.5.1
		10 m (32.8 ft)	JZSP-CMP09-10		
		15 m (49.2 ft)	JZSP-CMP09-15		
		20 m (65.6 ft)	JZSP-CMP09-20		
		30 m (98.4 ft)	JZSP-CMP19-30	50 m (164.0 ft) max.	
		40 m (131.2 ft)	JZSP-CMP19-40		
		50 m (164.0 ft)	JZSP-CMP19-50		

2

Name		Servomotor Model	Length	Type	Specifications	Refer-ence
② Servomotor Main Circuit Cables and Connectors	Without brakes	SGMAH SGMPH 100V: 30 to 200 W 200V: 30 to 750 W	3 m (9.84 ft)	JZSP-CMM00-03	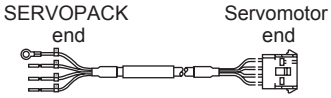	5.1.1
			5 m (16.4 ft)	JZSP-CMM00-05		
			10 m (32.8 ft)	JZSP-CMM00-10		
			15 m (49.2 ft)	JZSP-CMM00-15		
			20 m (65.6 ft)	JZSP-CMM00-20		
		SGMPH-15A 1.5 kW	3 m (9.84 ft)	JZSP-CMM20-03	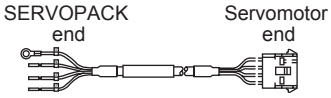	5.1.1
			5 m (16.4 ft)	JZSP-CMM20-05		
			10 m (32.8 ft)	JZSP-CMM20-10		
			15 m (49.2 ft)	JZSP-CMM20-15		
			20 m (65.6 ft)	JZSP-CMM20-20		
		400 V SGMAH 300 W, 650 W 400 V SGMPH 200 W to 1.5 kW	3 m (9.84 ft)	JZSP-CMM40-03	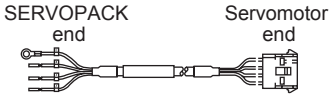	5.1.5
			5 m (16.4 ft)	JZSP-CMM40-05		
			10 m (32.8 ft)	JZSP-CMM40-10		
			15 m (49.2 ft)	JZSP-CMM40-15		
			20 m (65.6 ft)	JZSP-CMM40-20		
		Flexible type SGMAH SGMPH 100V: 30 to 200 W 200V: 30 to 750 W	3 m (9.84 ft)	JZSP-CMM01-03	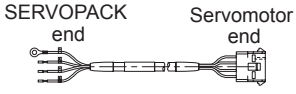	5.1.3
			5 m (16.4 ft)	JZSP-CMM01-05		
			10 m (32.8 ft)	JZSP-CMM01-10		
			15 m (49.2 ft)	JZSP-CMM01-15		
			20 m (65.6 ft)	JZSP-CMM01-20		

Note: When using the cable for the moving section such as robots, use a flexible type cable.
For the safety precautions, see *5.7 I/O Signal Cables for CN1 Connector*.

Name		Servomotor Model	Length	Type	Specifications	Refer-ence
② Servomotor Main Circuit Cables and Connectors (Cont'd)	With brakes	SGMAH SGMPH 100V: 30 to 200 W 200V: 30 to 750 W	3 m (9.84 ft)	JZSP-CMM10-03	SERVOPACK end Servomotor end 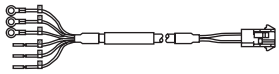	5.1.2
			5 m (16.4 ft)	JZSP-CMM10-05		
			10 m (32.8 ft)	JZSP-CMM10-10		
			15 m (49.2 ft)	JZSP-CMM10-15		
			20 m (65.6 ft)	JZSP-CMM10-20		
		SGMPH-15A 1.5 kW	3 m (9.84 ft)	JZSP-CMM30-03	SERVOPACK end Servomotor end 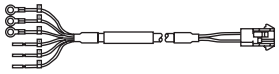	5.1.2
			5 m (16.4 ft)	JZSP-CMM30-05		
			10 m (32.8 ft)	JZSP-CMM30-10		
			15 m (49.2 ft)	JZSP-CMM30-15		
			20 m (65.6 ft)	JZSP-CMM30-20		
		400 V SGMAH 300 W, 650 W 400 V SGMPH 200 W to 1.5 kW	3 m (9.84 ft)	JZSP-CMM50-03	SERVOPACK end Servomotor end 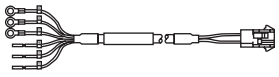	5.1.6
			5 m (16.4 ft)	JZSP-CMM50-05		
			10 m (32.8 ft)	JZSP-CMM50-10		
			15 m (49.2 ft)	JZSP-CMM50-15		
			20 m (65.6 ft)	JZSP-CMM50-20		
		Flexible type SGMAH SGMPH 100 V: 30 to 200 W 200 V: 30 to 750 W	3 m (9.84 ft)	JZSP-CMM11-03	SERVOPACK end Servomotor end 	5.1.4
			5 m (16.4 ft)	JZSP-CMM11-05		
			10 m (32.8 ft)	JZSP-CMM11-10		
			15 m (49.2 ft)	JZSP-CMM11-15		
			20 m (65.6 ft)	JZSP-CMM11-20		

Note: When using the cable for the moving section such as robots, use a flexible type cable. For the safety precautions, see *5.7 I/O Signal Cables for CN1 Connector*.

Name		Servomotor Model	Length	Type	Specifications	Refer-ence
② Servomotor Main Circuit Cables and Connectors (Cont'd)	For standard environment connector kit without brakes	SGMAH 30 W to 750 W SGMPH 100 W to 750 W		JZSP-CMM9-1	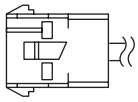	5.2.2
		SGMPH 1.5 kW		JZSP-CMM9-3		
	For standard environment connector kit with brakes	SGMAH 30 W to 750 W SGMPH 100 W to 750 W		JZSP-CMM9-2	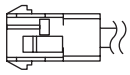	
		SGMPH 1.5 kW		JZSP-CMM9-4		

2.5.2 Cables for SGMGH/SGMSH/SGMDH/SGMUH Servomotors

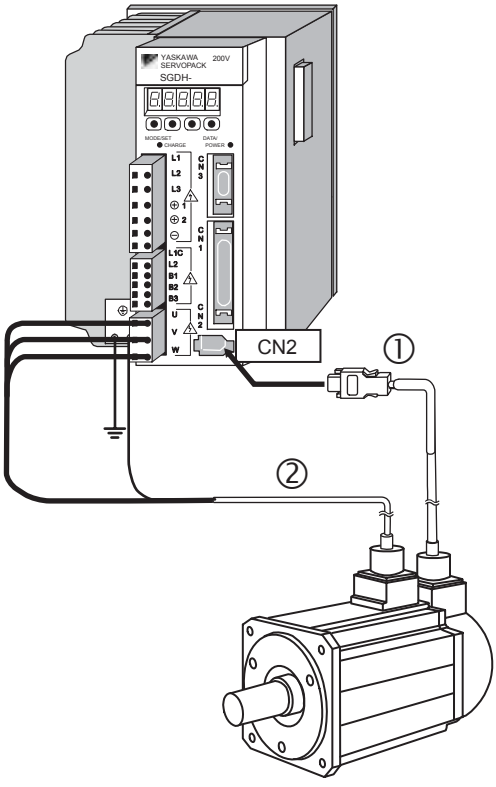

Name		Length	Type	Specifications	Reference
① CN2 Encoder Cables * Applicable for every type and capacity.	Cable with loose wires at encoder end	3 m (9.84 ft)	JZSP-CMP03-03	SERVOPACK end Encoder end 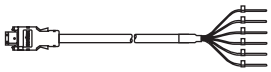	5.4.4
		5 m (16.4 ft)	JZSP-CMP03-05		
		10 m (32.8 ft)	JZSP-CMP03-10		
		15 m (49.2 ft)	JZSP-CMP03-15		
		20 m (65.6 ft)	JZSP-CMP03-20		
	Cable with connectors at both ends	3 m (9.84 ft)	JZSP-CMP01-03	With an straight plug SERVOPACK end Encoder end 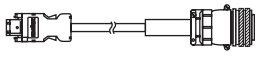	5.4.2
		5 m (16.4 ft)	JZSP-CMP01-05		
		10 m (32.8 ft)	JZSP-CMP01-10		
		15 m (49.2 ft)	JZSP-CMP01-15		
		20 m (65.6 ft)	JZSP-CMP01-20		
		3 m (9.84 ft)	JZSP-CMP02-03	With an L-shaped plug SERVOPACK end Encoder end 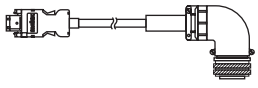	
		5 m (16.4 ft)	JZSP-CMP02-05		
		10 m (32.8 ft)	JZSP-CMP02-10		
		15 m (49.2 ft)	JZSP-CMP02-15		
		20 m (65.6 ft)	JZSP-CMP02-20		
	For standard environment encoder end connector		MS3106B20-29S*	Straight plug	5.4.4 5.5.2
			MS3108B20-29S*	L-shaped plug	
			MS3057-12A*	Cable clamp	

* Contact DDK Electronics, Inc.

Name		Length	Type	Specifications	Reference
① CN2 Encoder Cables (Cont'd) * Applicable for every type and capacity.	For IP67 specification encoder end connector		JA06A-20-29S-J1-EB	Straight plug	5.5.2
			JA08A-20-29S-J1-EB	L-shaped plug	
			JL04-2022CKE (09) Cable diameter: ϕ6.5 to ϕ9.5 mm (ϕ0.26 to ϕ0.37 in)	Cable clamp	
			JL04-2022CKE (12) Cable diameter: ϕ9.5 to ϕ13 mm (ϕ0.37 to ϕ0.51 in)		
			JL04-2022CKE (14) Cable diameter: ϕ12.9 to ϕ15.9 mm (ϕ0.51 to ϕ0.63 in)		
	SERVOPACK end connector kit		JZSP-CMP9-1	Soldered 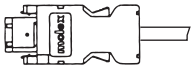	5.5.2
	Cables	5 m (16.4 ft)	JZSP-CMP09-05	20 m (65.6 ft) max.	5.5.2
		10 m (32.8 ft)	JZSP-CMP09-10		
		15 m (49.2 ft)	JZSP-CMP09-15		
		20 m (65.6 ft)	JZSP-CMP09-20		
		30m (98.4 ft)	JZSP-CMP19-30	50 m (164.0 ft) max.	
		40m (131.2 ft)	JZSP-CMP19-40		
		50m (164.0 ft)	JZSP-CMP19-50		

Name		Length	Type	Specifications	Refer-ence
① CN2 Encoder Cables (Cont'd) * Applicable for every type and capacity.	Flexible type cable with connectors at both ends	3m (9.84 ft)	JZSP-CMP11-03	With a straight plug 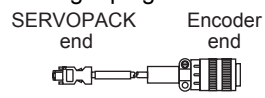	5.4.6
		5 m (16.4 ft)	JZSP-CMP11-05		
		10 m (32.8 ft)	JZSP-CMP11-10		
		15 m (49.2 ft)	JZSP-CMP11-15		
		20 m (65.6 ft)	JZSP-CMP11-20		
		3m (9.84 ft)	JZSP-CMP12-03	With an L-shaped plug 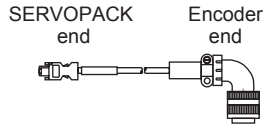	
		5 m (16.4 ft)	JZSP-CMP12-05		
		10 m (32.8 ft)	JZSP-CMP12-10		
		15 m (49.2 ft)	JZSP-CMP12-15		
		20 m (65.6 ft)	JZSP-CMP12-20		
	Flexible type cable with loose wire at encoder end	3m (9.84 ft)	JZSP-CMP13-03	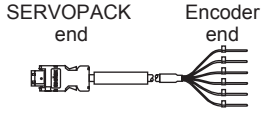	
		5 m (16.4 ft)	JZSP-CMP13-05		
		10 m (32.8 ft)	JZSP-CMP13-10		
		15 m (49.2 ft)	JZSP-CMP13-15		
		20 m (65.6 ft)	JZSP-CMP13-20		
②Servomotor Main Circuit Cables and Connectors	Cables and connectors			Cables with connectors are not available. Refer to *5 Specifications and Dimensional Drawings of Cables and Peripheral Devices*.	–

Note: When using the cable for the moving section such as robots, use a flexible type cable. For the safety precautions, see *5.7 I/O Signal Cables for CN1 Connector*.

2.6 Selecting Peripheral Devices

2.6.1 Special Options

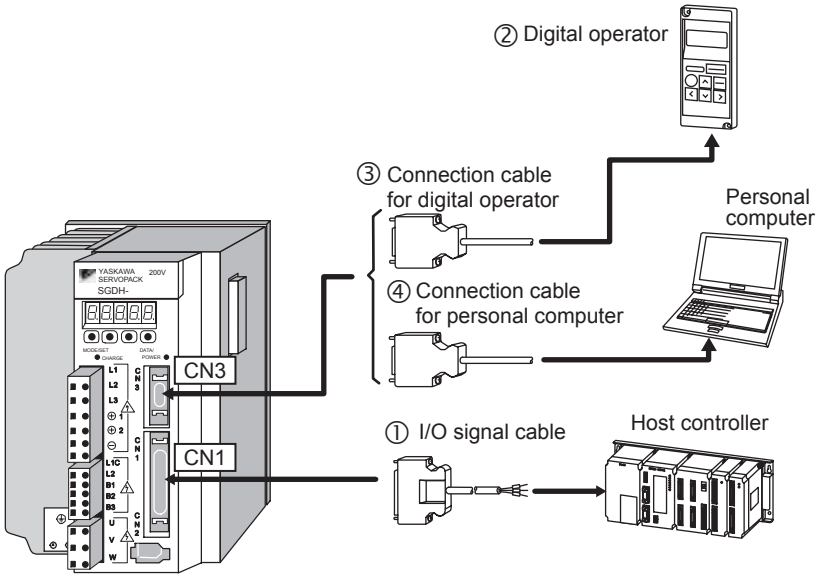

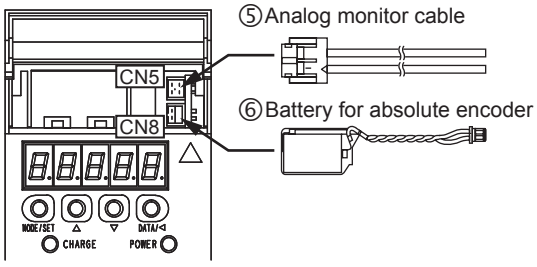

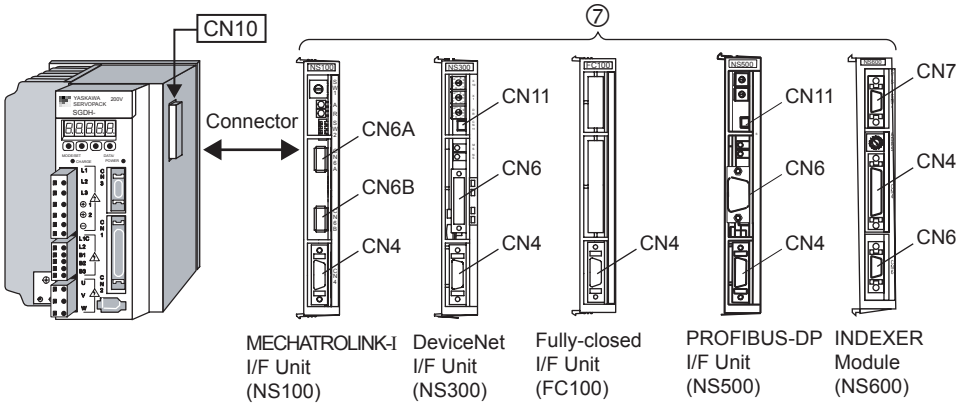

Name		Length	Type	Specifications	Reference
① CN1 I/O Signal Cables	Connector terminal block converter unit		JUSP-TA50P	Terminal block and 0.5 m (1.64 ft) connection cable	5.8.4
	Cable with loose wires at one end	1 m (3.28 ft)	JZSP-CKI01-1	Loose wires at host controller end	5.7.1
		2 m (6.56 ft)	JZSP-CKI01-2		
		3 m (9.84 ft)	JZSP-CKI01-3		
② Digital Operator			JUSP-OP02A-2	With connection cable (1 m (3.28 ft))	5.8.2
③ CN3 Connection Cable for Digital Operator		1m (3.28 ft)	JZSP-CMS00-1	Only required when using Σ series Digital Operator JUSP-OP02A-1. 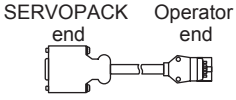	
		1.5m (4.92 ft)	JZSP-CMS00-2		
		2 m (6.56 ft)	JZSP-CMS00-3		
④ CN3 Connection Cable for Personal Computer		2 m (6.56 ft)	JZSP-CMS01	D-Sub 25-pin (For PC98) 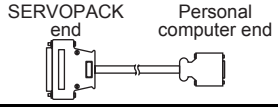	5.8.1
		2 m (6.56 ft)	JZSP-CMS02	D-Sub 9-pin (For DOS/V) 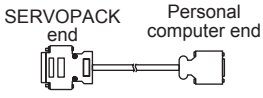	
		2 m (6.56 ft)	JZSP-CMS03	Half-pitch 14-pin (For PC 98) 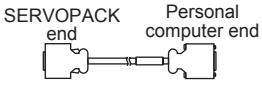	
⑤ CN5 Analog Monitor Cable		1 m (3.28 ft)	JZSP-CA01 or DE9404559	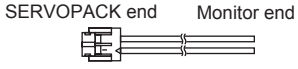	5.8.3

Name	Length	Type	Specifications	Reference
⑥ CN8 Battery for Absolute Encoder		JZSP-BA01	To mount in the SERVOPACK (30 W to 5.0 kW) 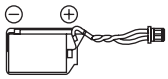	5.8.8
		JZSP-BA01-1	To mount in the SERVOPACK (6.0 kW to 15.0 kW) 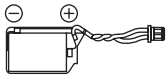	
		ER6VC3	To connect to a host controller (provided by a customer) 3.6 V 2000 mAh, manufactured by Toshiba Battery Co., Ltd. 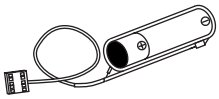	
⑦ Application Module *		MECHATROLINK-I I/F Unit (NS100)	JUSP-NS100	5.8.16
		DeviceNet I/F Unit (NS300)	JUSP-NS300	5.8.17
		Fully-closed I/F Unit (FC100)	JUSP-FC100	5.8.21
		PROFIBUS-DP I/F Unit (NS500)	JUSP-NS500	5.8.18
		INDEXER Module (NS600)	JUSP-NS600	5.8.19

* For details, refer to the manuals of each application module.

2.6.2 Molded-case Circuit Breaker and Fuse Capacity

Main Circuit Power Supply	SERVOPACK Model		Power Supply Capacity per SERVOPACK (kVA)	Current Capacity of the Molded-case Circuit Breaker and the Fuse (A_{rms})*1, *2 (Refer to 5.8.9)		Inrush Current	
	Capacity (kW)	SGDH-		Main Circuit Power Supply	Control Circuit Power Supply	Main Circuit Power Supply	Control Circuit Power Supply
Single-phase 100 V	0.03	A3BE	0.15	4	0.26	32A	30A
	0.05	A5BE	0.25				
	0.10	01BE	0.40				
	0.20	02BE	0.60	6			
Single-phase 200 V	0.03	A3AE	0.20	4	0.13	63A	60A
	0.05	A5AE	0.25				
	0.10	01AE	0.40				
	0.20	02AE	0.75				
	0.40	04AE	1.2	8			
Single-phase 220 V	0.75	08AE-S	2.1	11	0.13*4	130A	66A
	1.50	15AE-S	4.0	19			
Three-phase 200 V	0.45	05AE	1.4	4	0.15*4	118A	60A
	0.75	08AE	1.9	7			
	1.0	10AE	2.3				
	1.5	15AE	3.2	10			
	2.0	20AE	4.3	13		63A	
	3.0	30AE	5.9	17			
	5.0	50AE	7.5	28		67A	
	6.0	60AE	12.5	32	0.27*4	40A	
	7.5	75AE	15.5	41			
	11.0	1AAE	22.7	60	0.3*4	80A	
	15.0	1EAE	30.9	81			
Three-phase 400 V	0.45	05DE	1.1	1.6	0.7*4	10A	(24 VDC) *3
	1.0	10DE	2.3	3.4			
	1.5	15DE	3.2	4.6			
	2.0	20DE	4.9	7.1		20A	
	3.0	30DE	6.7	9.7			
	5.0	50DE	10.3	14.9		78A	
	6.0	60DE	12.4	17.8	1.2*4	20A	
	7.5	75DE	15.4	22.3			
	11.0	1ADE	22.6	32.7	1.3*4	40A	
	15.0	1EDE	30.9	44.6			

* 1. Nominal value at the rated load. The specified derating is required to select an appropriate fuse capacity.
* 2. Cutoff characteristics (25°C): 300% five seconds min. and inrush current of 20ms.
* 3. A preventive circuit for inrush current is not built in the 24 VDC control power supply. The protective circuit must be designed by the customer.
* 4. Make sure the current capacity is accurate. For the SERVOPACK with the cooling fan built-in, an inrush current flows; 200 % of the current capacity in the table above for two seconds, when turning ON the control circuit power supply to start the fan working.

Note: Do not use a fast-acting fuse. Because the SERVOPACK's power supply is a capacitor input type, a fast-acting fuse may blow when the power is turned ON.

IMPORTANT

The SGDH SERVOPACK does not include a protective grounding circuit. Install a ground-fault protector to protect the system against overload and short-circuit or protective grounding combined with the molded-case circuit breaker.

2.6.3 Noise Filters, Magnetic Contactors, Surge Suppressors and DC Reactors

Main Circuit Power Supply	SERVOPACK Model		Recommended Noise Filter (Refer to 5.8.10.)		Magnetic Contactor (Refer to 5.8.11.)	Surge Suppressor (Refer to 5.8.12.)	DC Reactor (Refer to 5.8.13.)
	Capacity (kW)	SGDH-	Type	Specifications			
Single-phase 100 V	0.03	A3BE	FN2070-6/07	Single-phase 250 VAC, 6 A	HI-11J (20 A)	TU-25C120	–
	0.05	A5BE					
	0.10	01BE					X5063
	0.20	02BE	FN2070-10/07	Single-phase 250 VAC, 10 A			X5062
Single-phase 200 V	0.03	A3AE	FN2070-6/07	Single-phase 250 VAC, 6 A		TU-25C240	–
	0.05	A5AE					
	0.10	01AE					X5071
	0.20	02AE					X5070
	0.40	04AE	FN2070-10/07	Single-phase 250 VAC, 10 A			X5069
Single-phase 220 V	0.75	08AE-S	FN2070-16/07	Single-phase 250 VAC, 16 A	HI-15J (35 A)		X5079
	1.50	15AE-S	FN350-30/33	Single-phase 250 VAC, 30 A	HI-20J (35 A)		X5078
Three-phase 200 V	0.45	05AE	FN258L-7/07	Three-phase 480 VAC, 7 A	HI-11J (20 A)		X5061
	0.75	08AE	FN258L-16/07	Three-phase 480 VAC, 16 A	HI-15J (35 A)		
	1.0	10AE					
	1.5	15AE					X5060
	2.0	20AE			HI-20J (35 A)		
	3.0	30AE	FN258L-30/07	Three-phase 480 VAC, 30 A			X5059
	5.0	50AE	FMAC-0934-5010	Three-phase 440 VAC, 50 A	HI-25J (50 A)	TU-65C240	X5068
	6.0	60AE					–
	7.5	75AE	FMAC-0953-6410	Three-phase 440 VAC, 64 A	HI-35J (65 A)		
	11.0	1AAE	FS5559-150-35	Three-phase 480 VAC, 150 A	HI-50J (75 A)		
	15.0	1EAE			HI-65J (100 A)		
Three-phase 400 V	0.45	05DE	FN258L-7/07	Three-phase 480 VAC, 7 A	HI-15JCU (35 A)	Built-in	X5074
	1.0	10DE					X5075
	1.5	15DE					
	2.0	20DE	FN258L-16/07	Three-phase 480 VAC, 16 A	HI-20JCU (35 A)		X5076
	3.0	30DE					
	5.0	50DE	FS5559-35-33	Three-phase 480 VAC, 35 A	HI-25JCU (50 A)		X5077
	6.0	60DE					–
	7.5	75DE			HI-35JCU (65 A)		
	11.0	1ADE	FS5559-80-34	Three-phase 480 VAC, 80 A	HI-50JCU (75 A)		
	15.0	1EDE			HI-65JCU (100 A)		

Note: 1. If some SERVOPACKs are wired at the same time, select the proper magnetic contactors according to the total capacity.
2. The following table shows the manufacturers of each device.

Peripheral Device	Manufacturer
Noise Filter	FN, FS type: Schaffner Electronic FMAC type: Timonta AG
Magnetic Contactor	Yaskawa Controls Co., Ltd.
Surge Suppressor	Yaskawa Controls Co., Ltd.
DC Reactor	Yaskawa Controls Co., Ltd.

2.6.4 Regenerative Resistors and Brake Power Supply Units

Main Circuit Power Supply	SERVOPACK Model		Regenerative Resistor (Refer to 5.8.6, 5.8.7, and 6.5.)			Brake Power Supply Unit (Refer to 5.8.5.)
	Capacity (kW)	SGDH-	Built-in		Externally connected	
			Resistance (Ω)	Capacity (W)		
Single-phase 100 V	0.03	A3BE	–	–	–	24 VDC brake (provided by a customer) *5 90 VDC brake • LPDE-1H01 for 100 VAC input • LPSE-2H01 for 200 VAC input
	0.05	A5BE				
	0.10	01BE				
	0.20	02BE				
Single-phase 200 V	0.03	A3AE				
	0.05	A5AE				
	0.10	01AE				
	0.20	02AE				
	0.40	04AE				
Single-phase 220 V	0.75	08AE-S	50	60		
	1.50	15AE-S	25	140	–	
Three-phase 200 V	0.45	05AE	50	60	–	
	0.75	08AE				
	1.0	10AE				
	1.5	15AE	30	70		
	2.0	20AE	25	140		
	3.0	30AE	12.5	140		
	5.0	50AE	8	280		
	6.0	60AE	(6.25) *1	(880)*1	JUSP-RA04	
	7.5	75AE	(3.13)*2	(1760)*2	JUSP-RA05	
	11.0	1AAE				
	15.0	1EAE				
Three-phase 400 V	0.45	05DE	108	70	–	
	1.0	10DE				
	1.5	15DE				
	2.0	20DE	45	140		
	3.0	30DE				
	5.0	50DE	32	180		
	6.0	60DE	(18)*3	(880)*3	JUSP-RA18	
	7.5	75DE				
	11.0	1ADE	(14.25)*4	(1760)*4	JUSP-RA19	
	15.0	1EDE				

* 1. For the optional JUSP-RA04 Regenerative Resistor Unit.
* 2. For the optional JUSP-RA05 Regenerative Resistor Unit.
* 3. For the optional JUSP-RA18 Regenerative Resistor Unit.
* 4. For the optional JUSP-RA19 Regenerative Resistor Unit.
* 5. Be careful when connecting the power supply for 24 VDC brake to the local power supply. The local power supply cannot apply the overvoltage such as surge to the output side, and the output side may be damaged even if the voltage is applied. Never fail to use the surge suppressor.

Note: 1. If the SERVOPACK cannot process the regenerative power, an external regenerative resistor is required. Refer to *5.8.6 External Regenerative Resistor*, *5.8.7 Regenerative Resistor Unit*, and *6.5 Connecting Regenerative Resistors*.

2. The following table shows the manufacturers of each device.

Peripheral Device	Manufacturer
External Regenerative Resistor	Iwaki Wireless Research Institute
External Regenerative Unit	Yaskawa Electric Corporation
Brake Power Supply Unit	Yaskawa Controls Co., Ltd.

3

Specifications and Dimensional Drawings

3.1 Ratings and Specifications of SGMAH (3000 min^{-1}) - - - - - - - 3-4
3.1.1 SGMAH Servomotors Without Gears - 3-4
3.1.2 SGMAH Servomotors With Standard Backlash Gears - - - - - - - - - - - - 3-6
3.1.3 SGMAH Servomotors With Low-backlash Gears - - - - - - - - - - - - - - - 3-8

3.2 Ratings and Specifications of SGMPH (3000min^{-1}) - - - - - - - 3-11
3.2.1 SGMPH Servomotors Without Gears - 3-11
3.2.2 SGMPH Servomotors With Standard Backlash Gears - - - - - - - - - - - 3-13
3.2.3 SGMPH Servomotors With Low-backlash Gears - - - - - - - - - - - - - - 3-15

3.3 Ratings and Specifications of SGMGH (1500min^{-1}) - - - - - - 3-17
3.3.1 SGMGH Servomotors (1500min^{-1}) Without Gears - - - - - - - - - - - - - 3-17
3.3.2 SGMGH Servomotors (1500min^{-1}) With Standard Backlash Gears - - 3-21
3.3.3 SGMGH Servomotors (1500min^{-1}) With Low-backlash Gears - - - - - 3-23

3.4 Ratings and Specifications of SGMGH (1000min^{-1}) - - - - - - 3-26
3.4.1 SGMGH Servomotors (1000min^{-1}) Without Gears - - - - - - - - - - - - - 3-26
3.4.2 SGMGH Servomotors (1000min^{-1}) With Standard Backlash Gears - - 3-29
3.4.3 SGMGH Servomotors (1000 min^{-1}) With Low-backlash Gears - - - - - 3-31

3.5 Ratings and Specifications of SGMSH (3000min^{-1}) - - - - - - - 3-33
3.5.1 SGMSH Servomotors (3000min^{-1}) Without Gears - - - - - - - - - - - - - - 3-33
3.5.2 SGMSH Servomotors (3000min^{-1}) With Low-backlash Gears - - - - - 3-36

3.6 Ratings and Specifications of SGMDH (2000min^{-1}) - - - - - - 3-39
3.6.1 SGMDH Servomotors (2000min^{-1}) With Holding Brakes - - - - - - - - - 3-39

3.7 Ratings and Specifications of SGMUH (6000min^{-1}) - - - - - - 3-41
3.7.1 SGMUH Servomotors (6000min^{-1}) Without Holding Brakes - - - - - - - 3-41

3.8 Mechanical Specifications of Servomotors - - - - - - - - - - - - - - 3-43
3.8.1 Precautions on Servomotor Installation - 3-43
3.8.2 Mechanical Tolerance - 3-44
3.8.3 Direction of Servomotor Rotation - 3-45
3.8.4 Impact Resistance - 3-45
3.8.5 Vibration Resistance - 3-45
3.8.6 Vibration Class - 3-45

3.9 Terms and Data for Servomotors With Gears - - - - - - - - - - 3-46
3.10 Servomotor Dimensional Drawings - - - - - - - - - - - - - - - - - 3-48
3.11 Dimensional Drawings of SGMAH Servomotors (3000 min^{-1}) - 3-49
3.11.1 SGMAH Servomotors (3000 min^{-1}) Without Gears - - - - - - - - - - - - 3-49
3.11.2 SGMAH Servomotors (3000 min^{-1}) With Brakes - - - - - - - - - - - - - - 3-53
3.11.3 SGMAH Servomotors (3000 min^{-1}) With Standard Backlash Gears - 3-57
3.11.4 SGMAH Servomotors (3000 min^{-1}) With Standard Backlash Gears and Brakes - 3-64
3.11.5 SGMAH Servomotors (3000 min^{-1}) With Low-backlash Gears - - - - - 3-71
3.12 Dimensional Drawings of SGMPH Servomotors (3000 min^{-1}) - 3-79
3.12.1 SGMPH Servomotors (3000 min^{-1}) Without Gears and Brake - - - - - 3-79
3.12.2 SGMPH Servomotors (3000 min^{-1}) With Brakes - - - - - - - - - - - - - - 3-81
3.12.3 SGMPH Servomotors (3000 min^{-1}) With Standard Backlash Gears - 3-83
3.12.4 SGMPH Servomotors (3000 min^{-1}) With Standard Backlash Gears and Brakes - 3-86
3.12.5 SGMPH Servomotors (3000 min^{-1}) With Low-backlash Gears - - - - - 3-89
3.13 Dimensional Drawing of Output Shafts With Oil Seals for SGMAH and SGMPH Servomotors - - - - - - - - - - - - - - - 3-93
3.13.1 SGMAH Servomotors - 3-93
3.13.2 SGMPH Servomotors - 3-93
3.14 Dimensional Drawings of SGMGH Servomotors (1500 min^{-1}) - 3-94
3.14.1 SGMGH Servomotors (1500 min^{-1}) Without Gears and Brakes - - - - 3-94
3.14.2 SGMGH Servomotors (1500 min^{-1}) 200-V Specifications Without Gears and With Brakes - 3-96
3.14.3 Servomotors SGMGH (1500 min^{-1}) 400-V Specifications Without Gears and With Brakes - 3-99
3.14.4 SGMGH Servomotors (1500min^{-1}) With Standard Backlash Gears and Without Brakes (Foot-mounted Type) - - - - - - - - - - - - 3-102
3.14.5 SGMGH Servomotors (1500min^{-1}) With Standard Backlash Gears and Without Brakes (Flange-mounted Type) - - - - - - - - - - - 3-108
3.14.6 SGMGH Servomotors (1500min^{-1}) With Low-backlash Gears and Without Brakes (Flange-mounted Type) - - - - - - - - - - - 3-116
3.15 Dimensional Drawings of SGMGH Servomotors (1000 min^{-1}) - 3-120
3.15.1 SGMGH Servomotors (1000 min^{-1}) Without Gears and Brakes - - - 3-120
3.15.2 SGMGH Servomotors (1000 min^{-1}) Without Gears and With Brakes - 3-122
3.15.3 SGMGH Servomotors (1000 min^{-1}) With Standard Backlash Gears and Without Brakes (Foot-mounted Type) - - - - - - - - - - - - - - - - - - 3-125
3.15.4 SGMGH Servomotors (1000 min^{-1}) With Standard Backlash Gears and Without Brakes (Flange-mounted Type) - - - - - - - - - - - - - - - - 3-130
3.15.5 SGMGH Servomotors (1000 min^{-1}) With Low-backlash Gears and Without Brakes (Flange-mounted Type) - - - - - - - - - - - - - - - - - - 3-137

3.16 Dimensional Drawings of SGMSH Servomotors (3000min^{-1}) - 3-141
3.16.1 SGMSH Servomotors (3000min^{-1}) Without Gears and Without Brakes - 3-141
3.16.2 SGMSH Servomotors (3000 min^{-1}) 200-V Specifications Without Gears With Brakes - 3-143
3.16.3 SGMSH Servomotors (3000 min^{-1}) 400-V Specifications Without Gears With Brakes - 3-145
3.16.4 SGMSH Servomotors (3000 min^{-1}) With Low-backlash Gears and Without Brakes (Flange-mounted Type) - 3-147
3.17 Dimensional Drawings of SGMDH Servomotors (2000min^{-1}) - 3-151
3.17.1 SGMDH Servomotors (2000min^{-1}) Without Gears and With/Without Brakes - 3-151
3.18 Dimensional Drawings of SGMUH Servomotors (6000min^{-1}) - 3-153
3.18.1 SGMUH Servomotors (6000min^{-1}) Without Gears and Without Brakes - 3-153
3.18.2 SGMUH Servomotors (6000min^{-1}) Without Gears and With Brakes - 3-154
3.19 Shaft End Specifications for SGMGH, SGMSH and SGMDH Servomotors - 3-156

3.1 Ratings and Specifications of SGMAH (3000 min^{-1})

3.1.1 SGMAH Servomotors Without Gears

(1) Ratings and Specifications

- Time Rating: Continuous
- Vibration Class: 15 µm or below
- Insulation Resistance: 500 VDC, 10 M Ω min.
- Ambient Temperature: 0 to 40°C (32 to 104°F)
- Excitation: Permanent magnet
- Mounting: Flange method
- Thermal Class: B
- Withstand Voltage:
  100 V, 200 V Servomotors: 1500 VAC for one minute
  400 V Servomotors: 1800 VAC for one minute
- Enclosure: Totally enclosed, self-cooled, IP55 (except for shaft opening)
- Ambient Humidity: 20% to 80% (no condensation)
- Drive Method: Direct drive

Voltage		100 V				200 V						400 V	
Servomotor Model SGMAH-		A3B	A5B	01B	02B	A3A	A5A	01A	02A	04A	08A	03D	07D
Rated Output *1	kW	0.03	0.05	0.1	0.2	0.03	0.05	0.1	0.2	0.4	0.75	0.3	0.65
Rated Torque *1,*2	N·m	0.0955	0.159	0.318	0.637	0.0955	0.159	0.318	0.637	1.27	2.39	0.955	2.07
	oz·in *3	13.5	22.5	45.0	90.2	13.5	22.5	45.0	90.2	180	338	135	293
Instantaneous Peak Torque *1	N·m	0.286	0.477	0.955	1.91	0.286	0.477	0.955	1.91	3.82	7.16	3.82	7.16
	oz·in *3	40.5	67.5	135	270	40.5	67.5	135	270	541	1014	541	1014
Rated Current *1	A (rms)	0.66	0.95	2.4	3.0	0.44	0.64	0.91	2.1	2.8	4.4	1.3	2.2
Instantaneous Max. Current *1	A (rms)	2.0	2.9	7.2	9.0	1.3	2.0	2.8	6.5	8.5	13.4	5.1	7.7
Rated Speed *1	min^{-1}	3000											
Max. Speed *1	min^{-1}	5000											
Torque Constant	N·m/A (rms)	0.157	0.182	0.146	0.234	0.238	0.268	0.378	0.327	0.498	0.590	0.837	1.02
	oz·in/A (rms) *3	22.2	25.8	20.7	33.1	33.7	38.0	53.5	46.3	70.5	83.6	119	144
Rotor Moment of Inertia J	$x10^{-4}$ $kg·m^2$	0.0166	0.0220	0.0364	0.106	0.0166	0.0220	0.0364	0.106	0.173	0.672	0.173	0.672
	$x10^{-3}$ $oz·in·s^2$ *3	0.235	0.312	0.515	1.50	0.235	0.312	0.515	1.50	2.45	9.52	2.45	9.52
Rated Power Rate *1	kW/s	5.49	11.5	27.8	38.2	5.49	11.5	27.8	38.2	93.7	84.8	52.9	63.8
Rated Angular Acceleration *1	rad/s^2	57500	72300	87400	60100	57500	72300	87400	60100	73600	35500	55300	30800

* 1. These items and torque-motor speed characteristics quoted in combination with an SGDH SERVO-PACK are at an armature winding temperature of 100°C (212°F). Other values quoted at 20°C (68°F). All values are typical.
* 2. Rated torques are continuous allowable torque values at 40°C (104°F) with an 250 × 250 × 6 (mm) [10 × 10 × 0.24 (in.)] aluminum plate (heat sink) attached.
* 3. These values are reference values.

(2) Holding Brake Moment of Inertia

The moment of inertia of the servomotor with holding brake is expressed using the following equation.

(The moment of inertia of the servomotor with holding brake) = (rotor moment of inertia) + (brake moment of inertia)

Servomotor Model SGMAH-		A3A A3B	A5A A5B	01A 01B	02A 02B	04A 03D	08A 07D
Holding Brake Moment of Inertia J	$\times 10^{-4}$ kg•m^2	0.0085			0.058		0.14
	$\times 10^{-3}$ oz•in•s^2	0.120			0.821		1.98

* These values are reference values.

(3) Derating Rate for Servomotor With Oil Seal

For a motor with oil seal, use the following derating rate because of the higher friction torque.

Servomotor Model SGMAH-		A3A A3B	A5A A5B	01A 01B	02A 02B	04A 03D	08A 07D
Derating Rate	(%)	70	80	90		95	

(4) Torque-motor Speed Characteristics

(a) 100-V Class

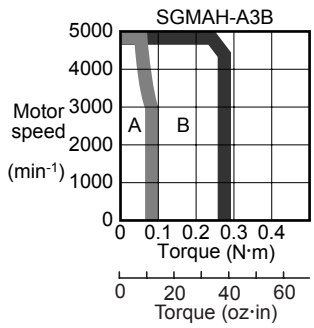

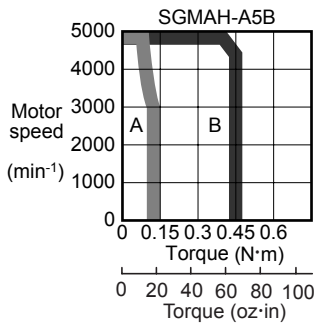

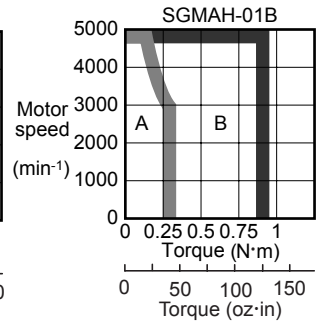

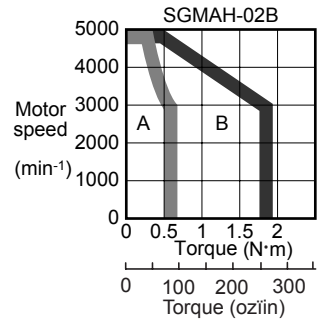

(b) 200-V Class

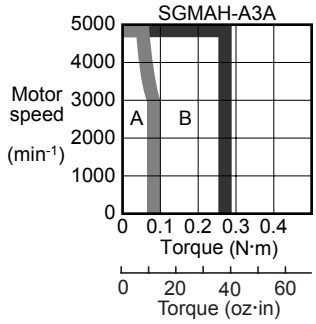

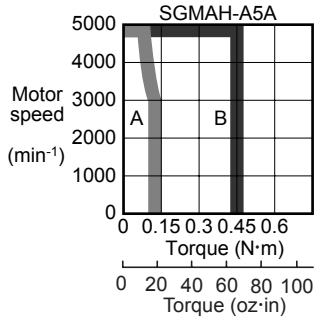

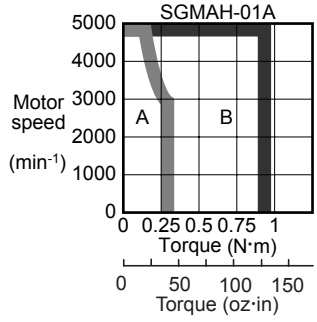

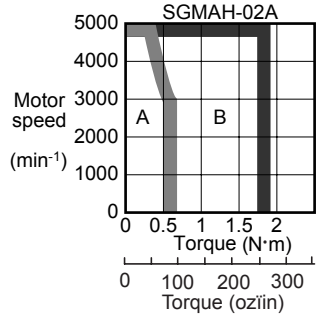

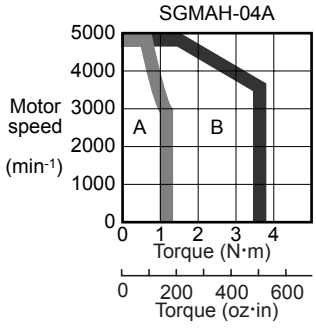

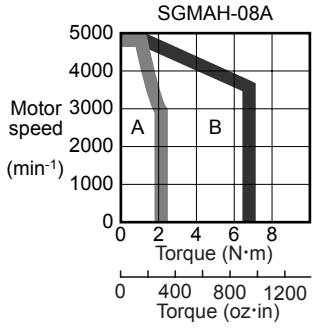

(c) 400-V Class

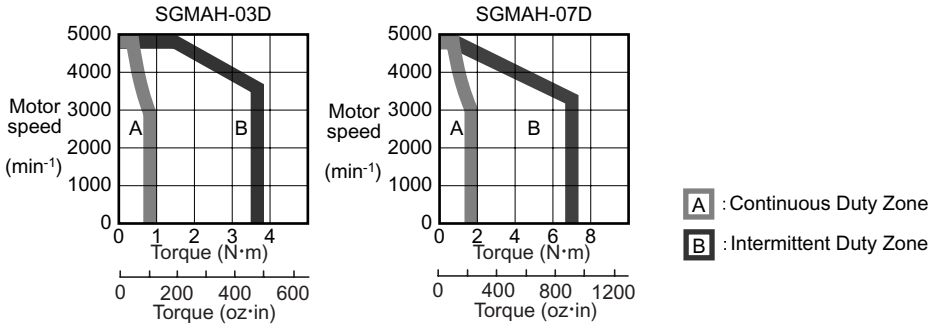

(5) Holding Brake Electrical Specifications

Holding Brake Rated Voltage	Servomotor Model	Servomotor Capacity W	Holding Brake Specifications			
			Capacity W	Holding Torque N·m (oz·in)	Coil Resistance Ω(at 20°C (68 °F))	Rated Current A (at 20°C (68 °F))
90 VDC	SGMAH-A3	30	6	0.0955 (13.5)	1350	0.067
	SGMAH-A5	50	6	0.159 (22.5)	1350	0.067
	SGMAH-01	100	6	0.318 (45.0)	1350	0.067
	SGMAH-02	200	7.4	0.637 (90.2)	1095	0.082
	SGMAH-03	300	7.4	0.955 (135)	1095	0.082
	SGMAH-04	400	7.4	1.27 (180)	1095	0.082
	SGMAH-07	650	9	2.07 (293)	900	0.1
	SGMAH-08	750	9	2.39 (338)	900	0.1
24 VDC	SGMAH-A3	30	6	0.0955 (13.5)	96	0.25
	SGMAH-A5	50	6	0.159 (22.5)	96	0.25
	SGMAH-01	100	6	0.318 (45.0)	96	0.25
	SGMAH-02	200	6.9	0.637 (90.2)	83.5	0.29
	SGMAH-03	300	6.9	0.955 (135)	83.5	0.29
	SGMAH-04	400	6.9	1.27 (180)	83.5	0.29
	SGMAH-07	650	7.7	2.07 (293)	75.2	0.32
	SGMAH-08	750	7.7	2.39 (338)	75.2	0.32

Note: The holding brake is only used to hold the load and cannot be used to stop the servomotor.

3.1.2 SGMAH Servomotors With Standard Backlash Gears

- Time Rating: Continuous
- Thermal Class: B
- Vibration Class: 15 µm or below
- Withstand Voltage:
  100 V, 200 V Servomotors: 1500 VAC for one minute
  400V Servomotors: 1800 VAC for one minute
- Insulation Resistance: 500 VDC, 10 MΩ min.
- Enclosure: Totally enclosed, self-cooled, IP55 (except for shaft opening)
- Ambient Temperature: 0 to 40°C (32 to 104°F)
- Ambient Humidity: 20% to 80% (no condensation)
- Excitation: Permanent magnet
- Drive Method: Direct drive
- Mounting: Flange method
- Backlash: 15 to 20 min max.
- Gear Mechanism: Planetary gear mechanism
- Gear Rotation Direction: Same direction as servomotor

Servomotor Model SGMAH-	Servomotor			Gear Output					Moment of Inertia J ×10^{-4} kg·m^2 (x 10^{-3} oz·in·s^2)	
	Out-put W	Rated Speed min^{-1}	Rated Torque N·m (oz·in)	Gear Ratio	Rated Torque/ Effi-ciency*2 N·m/% (oz·in/%)	Instanta-neous Peak Torque N·m (oz·in)	Rated Speed min^{-1}	Max. Speed *1 min^{-1}	Motor + Gears	Gears
A3□□AJ1□	30	3000	0.095 (13.45)	1/5	0.238/50 (33.7/50)	1.16 (164)	600	800	0.044 (0.623)	0.028 (0.397)
A3□□AJ3□				3/31	0.687/70 (97.3/70)	2.37 (336)	290	387	0.033 (0.467)	0.016 (0.227)
A3□□AJC□				1/21	1.60/80 (227/80)	5.48 (776)	143	190	0.023 (0.326)	0.007 (0.0991)
A3□□AJ7□				1/33	2.51/80 (355/80)	8.61 (1219)	91	121	0.021 (0.297)	0.005 (0.0708)
A5□□AJ1□	50		0.159 (22.5)	1/5	0.557/70 (78.9/70)	1.92 (272)	600	800	0.050 (0.708)	0.028 (0.397)
A5□□AJ3□				3/31	1.15/70 (163/70)	3.95 (559)	290	387	0.040 (0.566)	0.018 (0.255)
A5□□AJC□				1/21	2.67/80 (378/80)	9.07 (1284)	143	190	0.036 (0.510)	0.014 (0.198)
A5□□AJ7□				1/33	4.20/80 (595/80)	14.3 (2025)	91	121	0.032 (0.453)	0.010 (0.142)
01□□AJ1□	100		0.318 (45.0)	1/5	1.27/80 (180/80)	4.32 (612)	600	800	0.099 (1.40)	0.063 (0.892)
01□□AJ3□				3/31	2.63/80 (372/80)	8.88 (1257)	290	387	0.054 (0.765)	0.018 (0.255)
01□□AJC□				1/21	5.34/80 (756/80)	18.1 (2563)	143	190	0.071 (1.00)	0.035 (0.496)
01□□AJ7□				1/33	8.40/80 (1189/80)	28.4 (4021)	91	121	0.057 (0.807)	0.021 (0.297)
02□□AJ1□	200		0.637 (90.2)	1/5	2.55/80 (361/80)	8.60 (1218)	600	800	0.299 (4.23)	0.193 (2.73)
02□□AJ3□				3/31	5.27/80 (746/80)	17.8 (2520)	290	387	0.196 (2.78)	0.090 (1.27)
02□□AJC□				1/21	10.7/80 (1515/80)	36.1 (5112)	143	190	0.211 (2.99)	0.105 (1.49)
02□□AJ7□				1/33	16.8/80 (2379/80)	56.7 (8029)	91	121	0.181 (2.56)	0.075 (1.06)
03D□AJ1□	300		0.955 (135.2)	1/5	3.82/80 (541/80)	17.2 (2436)	600	800	0.366 (5.18)	0.193 (2.73)
03D□AJ3□				3/31	7.89/80 (1117/80)	35.5 (5027)	290	387	0.353 (5.00)	0.180 (2.55)
03D□AJC□				1/21	16.0/80 (2266/80)	72.2 (10224)	143	190	0.403 (5.71)	0.230 (3.26)
03D□AJ7□				1/33	25.2/80 (3569/80)	113.0 (16001)	91	121	0.338 (4.79)	0.165 (2.34)

Servomotor Model SGMAH-	Servomotor			Gear Output					Moment of Inertia J $\times 10^{-4}$ kg·m^2 (x 10^{-3} oz·in·s^2)	
	Output W	Rated Speed min^{-1}	Rated Torque N·m (oz·in)	Gear Ratio	Rated Torque/ Efficiency*2 N·m/% (oz·in/%)	Instantaneous Peak Torque N·m (oz·in)	Rated Speed min^{-1}	Max. Speed *1 min^{-1}	Motor + Gears	Gears
04A□AJ1□	400	3000	1.27 (179.8)	1/5	5.08/80 (719/80)	17.2 (2436)	600	800	0.366 (5.18)	0.193 (2.73)
04A□AJ3□				3/31	10.5/80 (1487/80)	35.5 (5027)	290	387	0.353 (5.00)	0.180 (2.55)
04A□AJC□				1/21	21.3/80 (3016/80)	72.2 (10224)	143	190	0.403 (5.71)	0.230 (3.26)
04A□AJ7□				1/33	33.5/80 (4744/80)	113.0 (16001)	91	121	0.338 (4.79)	0.165 (2.34)
07D□AJ1□	650		2.07 (293.1)	1/5	8.28/80 (1173)	32.0 (4531)	600	800	1.12 (15.86)	0.450 (6.37)
07D□AJ3□				3/31	17.1/80 (2422)	66.6 (9431)	290	387	1.10 (15.58)	0.425 (6.02)
07D□AJC□				1/21	34.8/80 (4928)	134 (18974)	143	190	1.15 (16.29)	0.475 (6.73)
07D□AJ7□				1/33	54.6/80 (7732)	212 (30019)	91	121	0.972 (12.76)	0.300 (4.25)
08A□AJ1□	750		2.39 (338)	1/5	9.56/80 (1354/80)	32 (4531)	600	800	1.12 (15.9)	0.450 (6.37)
08A□AJ3□				3/31	19.8/80 (2804/80)	66.6 (9431)	290	387	1.10 (15.6)	0.425 (6.02)
08A□AJC□				1/21	40.2/80 (5692/80)	134 (18974)	143	190	1.15 (15.3)	0.475 (6.73)
08A□AJ7□				1/33	63.1/80 (8935/80)	213 (30019)	91	121	0.972 (13.8)	0.300 (4.25)

* 1. Maximum motor speed is up to 4000 min^{-1} at the shaft.
* 2. Gear output torque is expressed using the following equation.

$$\text{(Gear output torque)} = \text{(servomotor output torque)} \times \left(\frac{1}{\text{gear ratio}}\right) \times \text{(efficiency)}$$

3.1.3 SGMAH Servomotors With Low-backlash Gears

- Time Rating: Continuous
- Thermal Class: B
- Vibration Class: 15 µm or below
- Withstand Voltage:
  100V, 200V Servomotors: 1500 VAC for one minute
  400V Servomotors: 1800 VAC for one minute
- Insulation Resistance: 500 VDC, 10 MΩ min.
- Enclosure: Totally enclosed, self-cooled, IP55 (except for shaft opening)
- Ambient Temperature: 0 to 40°C (32 to 104°F)
- Ambient Humidity: 20% to 80% (no condensation)
- Excitation: Permanent magnet
- Drive Method: Direct drive
- Mounting: Flange method
- Backlash: 3 min max.
- Gear Mechanism: Planetary gear mechanism
- Gear Rotation Direction: Same direction as servomotor

Servomotor Model SGMAH-	Servomotor			Gear Output					Moment of Inertia J $\times 10^{-4}$ kg·m^2 (x 10^{-3} oz·in·s^2)	
	Out-put W	Rated Speed min^{-1}	Rated Torque N·m (oz·in)	Gear Ratio	Rated Torque/Effi-ciency*2 N·m/% (oz·in/%)	Instanta-neous Peak Torque N·m (oz·in)	Rated Speed min^{-1}	Max. Speed *1 min^{-1}	Motor + Gears	Gears
A3□□AH1□	30	3000	0.159 (22.5)	1/5	0.238/50 (33.7/50)	1.16 (164.3)	600	800	0.053 (0.751)	0.036 (0.510)
A3□□AH2□				1/9	0.599/70 (84.8/70)	2.35 (333)	333	444	0.029 (0.411)	0.013 (0.184)
A3□□AHC□				1/21	1.60/80 (227/80)	5.48 (776)	143	190	0.025 (0.354)	0.008 (0.113)
A3□□AH7□				1/33	2.51/80 (355/80)	8.61 (1219)	91	121	0.023 (0.326)	0.006 (0.0850)
A5□□AH1□	50		0.159 (22.5)	1/5	0.557/70 (78.9/70)	1.92 (272)	600	800	0.058 (0.821)	0.036 (0.510)
A5□□AH2□				1/9	1.00/70 (142/70)	3.89 (551)	333	444	0.055 (0.779)	0.033 (0.467)
A5□□AHC□				1/21	2.67/80 (378/80)	9.12 (1292)	143	190	0.040 (0.566)	0.018 (0.255)
A5□□AH7□				1/33	4.20/80 (595/80)	14.3 (2025)	91	121	0.035 (0.496)	0.013 (0.184)
01□□AH1□	100		0.318 (45.0)	1/5	1.27/80 (180/80)	4.34 (615)	600	800	0.114 (1.61)	0.078 (1.10)
01□□AHB□				1/11	2.80/80 (396/80)	9.55 (1352)	273	363	0.084 (1.19)	0.048 (0.680)
01□□AHC□				1/21	5.34/80 (756/80)	18.2 (2577)	143	190	0.079 (1.12)	0.043 (0.609)
01□□AH7□				1/33	8.40/80 (1189/80)	28.7 *3 (4064)	91	121	0.069 (0.977)	0.033 (0.467)
02□□AH1□	200		0.637 (90.2)	1/5	2.55/80 (361/80)	8.4 (1190)	600	800	0.441 (6.25)	0.335 (4.74)
02□□AHB□				1/11	5.96/85 (844/85)	19.3 (2733)	273	363	0.191 (2.70)	0.085 (1.20)
02□□AHC□				1/21	11.4/85 (1614/85)	37.3 (5282)	143	190	0.216 (3.06)	0.110 (1.56)
02□□AH7□				1/33	17.9/85 (2535/85)	58.6*3 (8298)	91	121	0.171 (2.42)	0.065 (0.920)
03D□AH1□	300		0.955 (135.2)	1/5	4.06/85 (575/85)	17.2 (2436)	600	800	0.508 (7.19)	0.335 (4.74)
03D□AHB□				1/11	8.93/85 (1265/85)	35 *3 (4956)	273	363	0.368 (5.21)	0.195 (2.76)
03D□AHC□				1/21	17.0/85 (2407/85)	72.2 (10224)	143	190	0.368 (5.21)	0.195 (2.76)
03D□AH7□				1/33	25.2/80 (3569/80)	93*3 (13169)	91	121	0.346 (4.90)	0.173 (2.45)

Servomotor Model SGMAH-	Servomotor			Gear Output					Moment of Inertia J $\times 10^{-4}$ kg·m^2 (x 10^{-3} oz·in·s^2)	
	Output W	Rated Speed min^{-1}	Rated Torque N·m (oz·in)	Gear Ratio	Rated Torque/Efficiency*2 N·m/% (oz·in/%)	Instantaneous Peak Torque N·m (oz·in)	Rated Speed min^{-1}	Max. Speed *1 min^{-1}	Motor + Gears	Gears
04A□AH1□	400	3000	1.27 (179.8)	1/5	5.4/85 (765/85)	17.6 (2492)	600	800	0.508 (7.19)	0.335 (4.74)
04A□AHB□				1/11	11.9/85 (1685/85)	39.1 (5537)	273	363	0.368 (5.21)	0.195 (2.76)
04A□AHC□				1/21	22.7/85 (3215/85)	72.2 (10224)	143	190	0.368 (5.21)	0.195 (2.76)
04A□AH7□				1/33	33.5/80 (4744/80)	115*3 (16285)	91	121	0.346 (4.90)	0.173 (2.45)
07D□AH1□	650		2.07 (293.1)	1/5	8.80/85 (1246/85)	32 (4532)	600	800	1.25 (17.7)	0.583 (8.26)
07D□AHB□				1/11	19.3/85 (2733/85)	56 (7930)	273	363	1.20 (17.0)	0.528 (7.48)
07D□AHC□				1/21	36.9/85 (5225/85)	134 (18974)	143	190	1.26 (17.8)	0.593 (8.40)
07D□AH7□				1/33	58.1/85 (8228/85)	156 (22090)	91	121	0.935 (13.2)	0.263 (3.72)
08A□AH1□	750		2.39 (338)	1/5	10.2/85 (1444/85)	33.3 (4716)	600	800	1.25 (17.7)	0.583 (8.26)
08A□AHB□				1/11	22.3/85 (3158/85)	71*3 (10054)	273	363	1.20 (17.0)	0.528 (7.48)
08A□AHC□				1/21	42.7/85 (6047/85)	140 (19826)	143	190	1.26 (17.8)	0.593 (8.40)
08A□AH7□				1/33	67/85 (9488/85)	206*3 (29172)	91	121	0.935 (13.2)	0.263 (3.72)

* 1. Maximum motor speed is up to 4000 min^{-1} at the shaft.
* 2. Gear output torque is expressed using the following equation.

$$\text{(Gear output torque)} = \text{(servomotor output torque)} \times \left(\frac{1}{\text{gear ratio}}\right) \times \text{(efficiency)}$$

* 3. The instantaneous peak torque values indicated with *3 are limited by the gear, so use the following servomotor instantaneous peak torque. In this case, set torque limit parameters Pn402 and 403 for the SERVOPACK at 250%.

3.2 Ratings and Specifications of SGMPH (3000min^{-1})

3.2.1 SGMPH Servomotors Without Gears

(1) Ratings and Specifications

- Time Rating: Continuous
- Thermal Class: B
- Vibration Class: 15 µm or below
- Withstand Voltage:
  100 V, 200 V Servomotors: 1500 VAC for one minute
  400 V Servomotors: 1800 VAC for one minute
- Insulation Resistance: 500 VDC, 10 MΩ min.
- Enclosure: Totally enclosed, self-cooled, IP55 (except for shaft opening)
- Ambient Temperature: 0 to 40°C (32 to 104°F)
- Ambient Humidity: 20% to 80% (no condensation)
- Excitation: Permanent magnet
- Drive Method: Direct drive
- Mounting: Flange method

Voltage		100 V		200 V					400 V			
Servomotor Model SGMPH-		01B	02B	01A	02A	04A	08A	15A	02D	04D	08D	15D
Rated Output *1	kW	0.1	0.2	0.1	0.2	0.4	0.75	1.5	0.2	0.4	0.75	1.5
Rated Torque *1,*2	N·m	0.318	0.637	0.318	0.637	1.27	2.39	4.77	0.637	1.27	2.39	4.77
	oz·in *3	45.0	90.2	45.1	90.2	180	338	675	90.2	180	338	675
Instantaneous Peak Torque *1	N·m	0.955	1.91	0.955	1.91	3.82	7.16	14.3	1.91	3.82	7.16	14.3
	oz·in *3	135	270	135	270	541	1014	2025	270	541	1014	2025
Rated Current *1	A (rms)	2.2	2.7	0.89	2.0	2.6	4.1	7.5	1.4	1.4	2.6	4.5
Instantaneous Max. Current *1	A (rms)	7.1	8.4	2.8	6.0	8.0	13.9	23.0	4.6	4.4	7.8	13.7
Rated Speed *1	min^{-1}	3000										
Max. Speed *1	min^{-1}	5000										
Torque Constant	N·m/A (rms)	0.160	0.258	0.392	0.349	0.535	0.641	0.687	0.481	0.963	0.994	1.14
	oz·in /A (rms) *3	22.7	36.5	55.5	49.4	75.8	90.8	97.3	68.1	136	141	161
Rotor Moment of Inertia J	x10^{-4} kg·m^2	0.0491	0.193	0.0491	0.193	0.331	2.10	4.02	0.193	0.331	2.10	4.02
	x10^{-3} oz·in·s^2 *3	0.695	2.73	0.695	2.73	4.69	29.7	56.9	2.73	4.69	29.7	56.9
Rated Power Rate *1	kW/s	20.6	21.0	20.6	21.0	49.0	27.1	56.7	21.0	49.0	27.1	56.7
Rated Angular Acceleration *1	rad/s^2	64800	33000	64800	33000	38500	11400	11900	33000	38500	11400	11900

* 1. These items and torque-motor speed characteristics quoted in combination with an SGDH SERVOPACK are at an armature winding temperature of 100°C (212°F). Other values quoted at 20°C (66.2°F). All values are typical.
* 2. Rated torques are continuous allowable torque values at 40°C (104°F) with an aluminum plate (heat sink) attached.
  Heat sink dimensions:
  SGMPH-01, 02, and 04: 250 × 250 × 6 (mm), [10 × 10 × 0.24 (in)]
  SGMPH-08, and 15: 300 × 300 × 12 (mm), [12 × 12 × 0.5 (in)]
* 3. These values are reference values.

(2) Holding Brake Moment of Inertia

The moment of inertia of the servomotor with holding brake is expressed using the following equation.

(The moment of inertia of the servomotor with holding brake) =
(rotor moment of inertia) + (brake moment inertia)

Servomotor Model SGMPH-		01A 01B	02A 02B 02D	04A 04D	08A 08D	15A 15D
Holding Brake Moment of Inertia J	$\times 10^{-4}$ kg·m^2	0.029	0.109		0.875	
	$\times 10^{-3}$ oz·in·s^2*	0.411	1.544		12.39	

* These values are reference values.

(3) Derating Rate for Servomotor With Oil Seal

For a motor with oil seal, use the following derating rate because of the higher friction torque.

Servomotor Model SGMPH-		01A 01B	02A 02B 02D	04A 04D	08A 08D	15A 15D
Derating Rate	(%)	90		95		

(4) Torque-motor Speed Characteristics

(a) 100-V Class

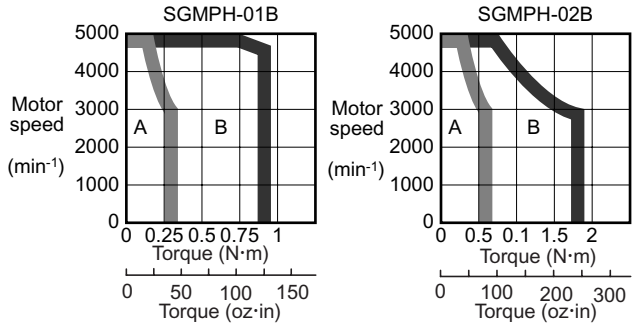

(b) 200-V / 400-V Class

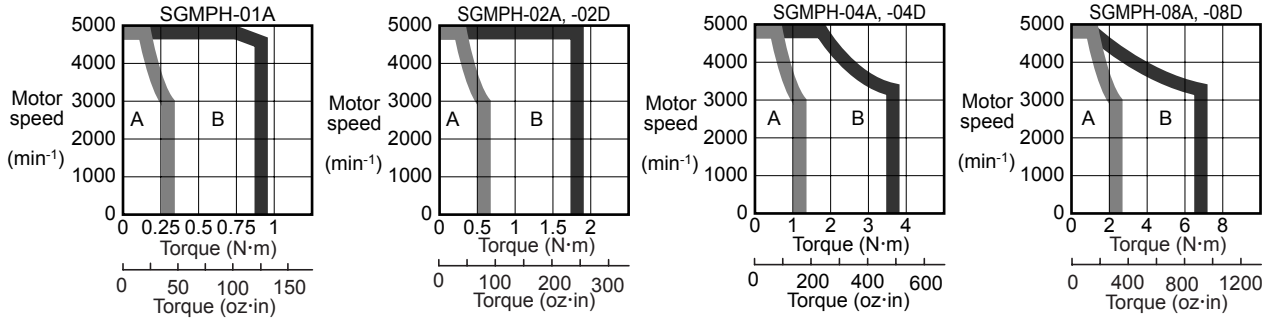

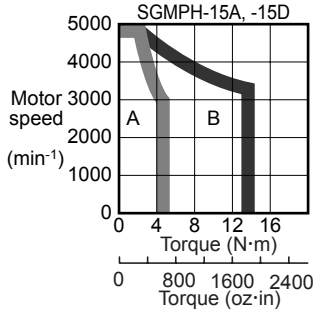

A : Continuous Duty Zone B : Intermittent Duty Zone

(5) Holding Brake Electrical Specifications

Holding Brake Rated Voltage	Servomotor Model	Servomotor Capacity W	Holding Brake Specifications			
			Capacity W	Holding Torque N·m (oz·in)	Coil Resistance Ω (at 20 °C)	Rated Current A (at 20 °C)
90 VDC	SGMPH-01	100	8.1	0.318 (45.0)	1000	0.09
	SGMPH-02	200	7.6	0.637 (90.2)	1062	0.085
	SGMPH-04	400	7.2	1.27 (180)	1125	0.08
	SGMPH-08	750	7.5	2.39 (338)	1083	0.083
	SGMPH-15	1500	10	4.77 (675)	832	0.108
24 VDC	SGMPH-01	100	8.1	0.318 (45.0)	71	0.34
	SGMPH-02	200	7.6	0.637 (90.2)	75.8	0.32
	SGMPH-04	400	7.6	1.27 (180)	75.8	0.32
	SGMPH-08	750	7.5	2.39 (338)	76.8	0.31
	SGMPH-15	1500	10	4.77 (675)	57.6	0.42

Note: The holding brake is only used to hold the load and cannot be used to stop the servomotor.

3.2.2 SGMPH Servomotors With Standard Backlash Gears

- Time Rating: Continuous
- Thermal Class: B
- Vibration Class: 15 μm or below
- Withstand Voltage:
  100V, 200V Servomotors: 1500 VAC for one minute
  400V Servomotors: 1800 VAC for one minute
- Insulation Resistance: 500 VDC, 10 MΩ min.
- Enclosure: Totally enclosed, self-cooled, IP55 (except for shaft opening)
- Ambient Temperature: 0 to 40°C (32 to 104°F)
- Ambient Humidity: 20% to 80% (no condensation)
- Excitation: Permanent magnet
- Drive Method: Direct drive
- Mounting: Flange method
- Backlash: 15 min max.
- Gear Mechanism: Planetary gear mechanism
- Gear Rotation Direction: Same direction as servomotor

Servomotor Model SGMPH-	Servomotor			Gear Output					Moment of Inertia J $\times 10^{-4}$ kg·m^2 (x 10^{-3} oz·in·s^2)	
	Out-put W	Rated Speed min^{-1}	Rated Torque N·m (oz·in)	Gear Ratio	Rated Torque/ Effi-ciency*2 N·m/% (oz·in/%)	Instanta-neous Peak Torque N·m (oz·in)	Rated Speed min^{-1}	Max. Speed *1 min^{-1}	Motor + Gears	Gears
01□□□J1□	100	3000	0.318 (45.0)	1/5	1.27/80 (180/80)	4.32 (612)	600	800	0.112 (15.9)	0.063 (0.892)
01□□□J3□				3/31	2.63/80 (372/80)	8.88 (1257)	290	387	0.067 (9.49)	0.018 (0.255)
01□□□JC□				1/21	5.34/80 (756/80)	18.1 (2563)	143	190	0.084 (11.9)	0.035 (0.496)
01□□□J7□				1/33	8.40/80 (1189/80)	28.4 (4021)	91	121	0.070 (9.91)	0.021 (0.297)
02□□□J1□	200		0.637 (90.2)	1/5	2.55/80 (361/80)	8.6 (1218)	600	800	0.386 (54.7)	0.193 (2.73)
02□□□J3□				3/31	5.27/80 (746/80)	17.8 (2520)	290	387	0.283 (40.1)	0.090 (1.27)
02□□□JC□				1/21	10.7/80 (1515/80)	36.1 (5112)	143	190	0.298 (42.2)	0.105 (1.49)
02□□□J7□				1/33	16.8/80 (2379/80)	56.7 (8029)	91	121	0.268 (37.9)	0.075 (1.06)
04□□□J1□	400		1.27 (179.8)	1/5	5.08/80 (719/80)	17.2 (2436)	600	800	0.524 (74.2)	0.193 (2.73)
04□□□J3□				3/31	10.5/80 (1487/80)	35.5 (5027)	290	387	0.511 (72.4)	0.180 (2.55)
04□□□JC□				1/21	21.3/80 (3016/80)	72.2 (10224)	143	190	0.561 (79.4)	0.230 (3.26)
04□□□J7□				1/33	33.5/80 (4744/80)	113 (16001)	91	121	0.496 (70.2)	0.165 (2.34)
08□□□J1□	750		2.39 (338)	1/5	9.56/80 (1354/80)	32 (4531)	600	800	2.55 (361)	0.450 (6.37)
08□□□J3□				3/31	19.8/80 (2804/80)	66.6 (9431)	290	387	2.53 (358)	0.425 (6.02)
08□□□JC□				1/21	40.2/80 (5692/80)	134 (18974)	143	190	2.58 (365)	0.475 (6.73)
08□□□J7□				1/33	63.1/80 (8935/80)	213 (30161)	91	121	2.40 (340)	0.300 (4.25)
15□□□J1□	1500		4.77 (675)	1/5	19.1/80 (2705/80)	64.4 (9119)	600	800	4.97 (704)	0.950 (13.5)
15□□□J3□				1/11	42.5/80 (6019/80)	144 (20107)	269	359	5.27 (746)	1.250 (17.7)
15□□□JC□				1/21	80.1/80 (11342/80)	270 (38232)	143	190	5.33 (755)	1.300 (18.4)
15□□□J7□				1/33	126/80 (17842/80)	425 (60180)	91	121	4.82 (683)	0.800 (11.3)

* 1. Maximum motor speed is up to 4000 min^{-1} at the shaft.
* 2. Gear output torque is expressed using the following equation.

* 3. (Gear output torque) = (servomotor output torque) × $\left(\frac{1}{\text{gear ratio}}\right)$ × (efficiency)

3.2.3 SGMPH Servomotors With Low-backlash Gears

- Time Rating: Continuous
- Vibration Class: 15 µm or below
- Insulation Resistance: 500 VDC, 10 MΩ min.
- Ambient Temperature: 0 to 40°C (32 to 104°F)
- Excitation: Permanent magnet
- Mounting: Flange method
- Gear Mechanism: Planetary gear mechanism
- Thermal Class: B
- Withstand Voltage:
  100V, 200V Servomotors: 1500 VAC for one minute
  400V Servomotors: 1800 VAC for one minute
- Enclosure: Totally enclosed, self-cooled, IP55 (except for shaft opening)
- Ambient Humidity: 20% to 80% (no condensation)
- Drive Method: Direct drive
- Backlash: 3 min max.
- Gear Rotation Direction: Same direction as servomotor

Servomotor Model SGMPH-	Servomotor			Gear Output					Moment of Inertia J ×10^{-4} kg·m^2 (×10^{-3} oz·in·s^2)	
	Output W	Rated Speed min^{-1}	Rated Torque N·m (oz·in)	Gear Ratio	Rated Torque/Efficiency*2 N·m/% (oz·in/%)	Instantaneous Peak Torque N·m (oz·in)	Rated Speed min^{-1}	Max. Speed *1 min^{-1}	Motor + Gears	Gears
01□□□H1□	100	3000	0.318 (45.0)	1/5	1.27/80 (180/80)	4.34 (612)	600	800	0.142 (2.01)	0.093 (1.32)
01□□□HB□				1/11	2.80/80 (396/80)	9.55 (1352)	273	363	0.097 (1.37)	0.048 (0.68)
01□□□HC□				1/21	5.34/80 (756/80)	18.2 (2577)	143	190	0.092 (1.303)	0.043 (0.61)
01□□□H7□				1/33	8.40/80 (1189/80)	28.7*3 (4064)	91	121	0.082 (1.16)	0.033 (0.47)
02□□□H1□	200		0.637 (90.2)	1/5	2.55/80 (361/80)	8.4 (1190)	600	800	0.553 (7.83)	0.360 (5.10)
02□□□HB□				1/11	5.96/85 (844)	19.3 (2733)	273	363	0.281 (3.98)	0.088 (1.25)
02□□□HC□				1/21	11.4/85 (1614/85)	37.3 (5282)	143	190	0.303 (4.29)	0.110 (1.56)
02□□□H7□				1/33	17.9/85 (2535/85)	58.6*3 (8298)	91	121	0.258 (3.65)	0.065 (0.920)
04□□□H1□	400		1.27 (179.8)	1/5	5.4/85 (765/85)	17.6 (2492)	600	800	0.691 (9.79)	0.360 (5.10)
04□□□HB□				1/11	11.9/85 (1685/85)	39.1*3 (5537)	273	363	0.526 (7.45)	0.195 (2.76)
04□□□HC□				1/21	22.7/85 (3215/85)	72.2 (10224)	143	190	0.526 (7.45)	0.195 (2.76)
04□□□H7□				1/33	33.5/80 (4744/80)	115*3 (16285)	91	121	0.504 (7.13)	0.172 (2.44)

Servomotor Model SGMPH-	Servomotor			Gear Output					Moment of Inertia J $\times 10^{-4}$ kg·m^2 ($\times 10^{-3}$ oz·in·s^2)	
	Output W	Rated Speed min^{-1}	Rated Torque N·m (oz·in)	Gear Ratio	Rated Torque/Efficiency*2 N·m/% (oz·in/%)	Instantaneous Peak Torque N·m (oz·in)	Rated Speed min^{-1}	Max. Speed *1 min^{-1}	Motor + Gears	Gears
08□□□H1□	750	3000	2.39 (338)	1/5	10.2/85 (1444/85)	33.3 (4716)	600	800	2.87 (40.6)	0.765 (10.8)
08□□□HB□				1/11	22.3/85 (3158/85)	71*3 (10054)	273	363	2.62 (37.1)	0.523 (7.41)
08□□□HC□				1/21	42.7/85 (6047/85)	140 (19826)	143	190	2.76 (39.1)	0.663 (9.39)
08□□□H7□				1/33	67/85 (9488/85)	206*3 (29172)	91	121	2.56 (36.3)	0.455 (6.44)
15□□□H1□	1500		4.77 (675)	1/5	20.3/85 (2875/85)	33.3 (4716)	600	800	5.56 (78.7)	1.54 (21.8)
15□□□HB□				1/11	44.6/85 (6316/85)	71 (10054)	273	363	6.11 (86.5)	2.09 (29.6)
15□□□GC□				1/21	80.1/80 (11342/80)	270 (38232)	143	190	6.00 (85.0)	1.98 (28.0)
15□□□G7□				1/33	126/80 (17842/80)	353 *3 (49985)	91	121	5.14 (72.8)	1.12 (15.8)

* 1. Maximum motor speed is up to 4000 min^{-1} at the shaft.
* 2. Gear output torque is expressed using the following equation.

$$\text{(Gear output torque)} = \text{(servomotor output torque)} \times \left(\frac{1}{\text{gear ratio}}\right) \times \text{(efficiency)}$$

* 3. The instantaneous peak torque values indicated with *3 are limited by the gear, so use the following servomotor instantaneous peak torque. In this case, set torque limit parameters Pn402 and 403 for the SERVOPACK at 250%.

3.3 Ratings and Specifications of SGMGH (1500min^{-1})

3.3.1 SGMGH Servomotors (1500min^{-1}) Without Gears

(1) Ratings and Specifications

- Time Rating: Continuous
- Vibration Class: 15 µm or below
- Insulation Resistance: 500 VDC, 10 MΩ min.
- Ambient Temperature: 0 to 40°C (32 to 104°F)
- Excitation: Permanent magnet
- Mounting: Flange method
- Thermal Class: F
- Withstand Voltage:
  200 V Servomotors: 1500 VAC for one minute
  400 V Servomotors: 1800 VAC for one minute
- Enclosure: Totally enclosed, IP67 self-cooled (except for shaft opening)
- Ambient Humidity: 20% to 80% (no condensation)
- Drive Method: Direct drive

(a) 200-V Class

Voltage		200 V									
Servomotor Model SGMGH-		05A□A	09A□A	13A□A	20A□A	30A□A	44A□A	55A□A	75A□A	1AA□A	1EA□A
Rated Output *1	kW	0.45	0.85	1.3	1.8	2.9	4.4	5.5	7.5	11	15
Rated Torque *1	N·m	2.84	5.39	8.34	11.5	18.6	28.4	35.0	48.0	70.0	95.4
	lb·in *2	25	48	74	102	165	252	310	425	620	844
Instantaneous Peak Torque *1	N·m	8.92	13.8	23.3	28.7	45.1	71.1	87.6	119	175	224
	lb·in *2	79	122	207	254	404	630	775	1050	1549	1982
Rated Current *1	A (rms)	3.8	7.1	10.7	16.7	23.8	32.8	42.1	54.7	58.6	78.0
Instantaneous Max. Current *1	A (rms)	11	17	28	42	56	84	110	130	140	170
Rated Speed *1	min^{-1}	1500									
Max. Speed *1	min^{-1}	3000								2000	
Torque Constant	N·m/A (rms)	0.82	0.83	0.84	0.73	0.83	0.91	0.88	0.93	1.25	1.32
	lb·in/A (rms) *2	7.26	7.35	7.43	6.46	7.35	8.05	7.79	8.23	11.1	11.7
Rotor Moment of Inertia J*2	×10^{-4} kg·m^2	7.24	13.9	20.5	31.7	46.0	67.5	89.0	125	281	315
		(9.34)	(16.0)	(22.6)	(40.2)	(54.5)	(76.0)	(97.5)	(134)	(300)	(353)
	x10^{-3} lb·in·s^2	6.41	12.3	18.2	28.1	40.7	59.8	78.8	111	249	279
		(8.28)	(14.2)	(20.1)	(35.6)	(48.2)	(67.3)	(86.3)	(119)	(266)	(312)
Rated Power Rate *1	kW/s	11.2	20.9	33.8	41.5	75.3	120	137	184	174	289
Rated Angular Acceleration *1	rad/s^2	3930	3880	4060	3620	4050	4210	3930	3850	2490	3030

Note: Refer to the next page for the notes.

(b) 400-V Class

Voltage		400 V									
Servomotor Model SGMGH-		05D□A	09D□A	13D□A	20D□A	30D□A	44D□A	55D□A	75D□A	1AD□A	1ED□A
Rated Output *1	kW	0.45	0.85	1.3	1.8	2.9	4.4	5.5	7.5	11	15
Rated Torque *1	N·m	2.84	5.39	8.34	11.5	18.6	28.4	35.0	48.0	70.0	95.4
	lb·in *2	25	48	74	102	165	252	310	425	620	844
Instantaneous Peak Torque *1	N·m	8.92	13.8	23.3	28.7	45.1	71.1	90.7	123	175	221
	lb·in *2	79	122	207	254	400	630	803	1089	1549	1956
Rated Current *1	A (rms)	1.9	3.5	5.4	8.4	11.9	16.5	20.8	25.4	28.1	37.2
Instantaneous Max. Current *1	A (rms)	5.5	8.5	14	20	28	40.5	55	65	70	85
Rated Speed *1	min^{-1}	1500									
Max. Speed *1	min^{-1}	3000								2000	
Torque Constant	N·m/A (rms)	1.64	1.65	1.68	1.46	1.66	1.82	1.74	2.0	2.56	2.64
	lb·in/A (rms) *2	14.5	14.6	14.9	12.9	14.7	16.1	15.4	17.7	22.7	23.4
Rotor Moment of Inertia J*2	$\times 10^{-4}$ kg·m^2	7.24	13.9	20.5	31.7	46.0	67.5	89.0	125	281	315
		(9.34)	(16.0)	(22.6)	(40.2)	(54.5)	(76.0)	(97.5)	(134)	(300)	(353)
	x10^{-3} lb·in·s^2	6.42	12.3	18.2	28.1	40.7	59.8	78.8	111	249	279
		(8.28)	(14.2)	(20.1)	(35.6)	(48.2)	(67.3)	(86.3)	(119)	(266)	(312)
Rated Power Rate *1	kW/s	11.2	20.9	33.8	41.5	75.3	120	137	184	174	289
Rated Angular Acceleration *1	rad/s^2	3930	3880	4060	3620	4050	4210	3930	3850	2490	3030

* 1. These items and torque-motor speed characteristics quoted in combination with an SGDM/SGDH SERVOPACK are at an armature winding temperature of 20°C (68°F).
* 2. The values in the parentheses are those for motors with holding brakes.

Note: These characteristics are values with the following iron plate (heat sink) attached for cooling.
SGMGH-05, 09, and 13: 400 × 400 × 20 (mm) [15.75 × 15.75 × 0.79 (in)]
SGMGH-20, 30, 44, 55, and 75: 550 × 550 × 30 (mm) [21.65 × 21.65 × 1.18 (in)]
SGMGH-1A and 1E: 650 × 650 × 35 (mm) [25.59 × 25.59 × 1.38 (in)]

(2) Holding Brake Moment of Inertia

The moment of inertia of the servomotor with holding brake is expressed using the following equation.
(The moment of inertia of the servomotor with holding brake) =
(rotor moment of inertia) + (brake moment of inertia)

Servomotor Model SGMGH-		05A□A 05D□A	09A□A 09D□A	13A□A 13D□A	20A□A 20D□A	30A□A 30D□A	44A□A 44D□A	55A□A 55D□A	75A□A 75D□A
Holding Brake Moment of Inertia J	×10^{-4} kg·m^2	2.10			8.50				
	×10^{-3} lb·in·s^2*	1.86			7.53				

Servomotor Model SGMGH-		1AA□A 1AD□A	1EA□A 1ED□A
Holding Brake Moment of Inertia J	×10^{-4} kg·m^2	18.8	37.5
	×10^{-3} lb·in·s^2*	16.7	33.2

* These values are reference values.

(3) Torque-motor Speed Characteristics

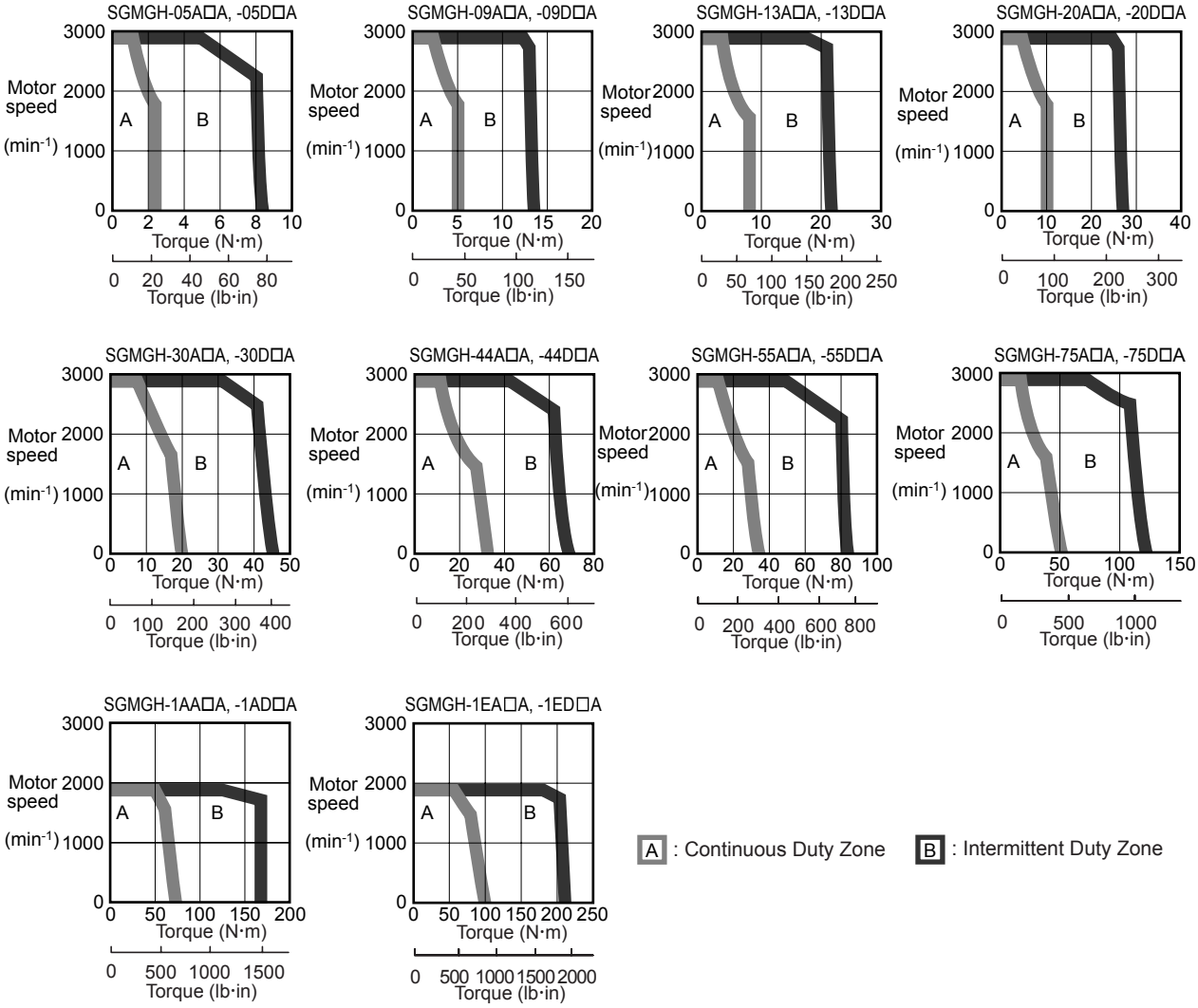

(4) Holding Brake Electrical Specifications

Holding Brake Rated Voltage	Servomotor Model	Servomotor Capacity W	Holding Brake Specifications			
			Capacity W	Holding Torque N·m (lb·in)	Coil Resistance Ω (at 20 °C (68 °F))	Rated Current A (at 20 °C (68 °F))
90 VDC	SGMGH-05	450	10.1	4.41 (39.0)	804	0.11
	SGMGH-09	850	10.1	12.7 (112)	804	0.11
	SGMGH-13	1300	10.1	12.7 (112)	804	0.11
	SGMGH-20	1800	18.5	43.1 (381)	438	0.21
	SGMGH-30	2900	18.5	43.1 (381)	438	0.21
	SGMGH-44	4400	18.5	43.1 (381)	438	0.21
	SGMGH-55	5500	23.5	72.6 (643)	327	0.28
	SGMGH-75	7500	23.5	72.6 (643)	327	0.28
	SGMGH-1A	11000	32.0	84.3 (746)	253	0.36
	SGMGH-1E	15000	35.0	114.6 (1014)	231	0.39
24 VDC	SGMGH-05	450	9.85	4.41 (39.0)	58.7	0.41
	SGMGH-09	850	9.85	12.7 (112)	58.7	0.41
	SGMGH-13	1300	9.85	12.7 (112)	58.7	0.41
	SGMGH-20	1800	18.5	43.1 (381)	31.1	0.77
	SGMGH-30	2900	18.5	43.1 (381)	31.1	0.77
	SGMGH-44	4400	18.5	43.1 (381)	31.1	0.77
	SGMGH-55	5500	23.5	72.6 (643)	24.5	0.98
	SGMGH-75	7500	23.5	72.6 (643)	24.5	0.98
	SGMGH-1A	11000	32.0	84.3 (746)	18.0	1.33
	SGMGH-1E	15000	35.0	114.6 (1014)	16.4	1.46

Note: The holding brake is only used to hold the load and cannot be used to stop the servomotor.

3.3.2 SGMGH Servomotors (1500min^{-1}) With Standard Backlash Gears

- Time Rating: Continuous
- Vibration Class: 15 µm or below
- Insulation Resistance: 500 VDC, 10 MΩ min.
- Ambient Temperature: 0 to 40°C (32 to 104°F)
- Excitation: Permanent magnet
- Mounting: Foot and flange-mounted
  Type 4095 to 4115: Omni-directional mounting
  Type 4130 to 4190: Horizontal mounting to shaft
- Gear Mechanism: Planetary gear mechanism
- Thermal Class: F
- Withstand Voltage:
  200 V Servomotors: 1500 VAC for one minute
  400 V Servomotors: 1800 VAC for one minute
- Enclosure: Totally enclosed, IP44 self-cooled (or the equivalent)
- Ambient Humidity: 20% to 80% (no condensation)
- Drive Method: Direct drive
- Backlash: Roughly 0.6 to 2° at the gear output shaft
- Gear Rotation Direction: Reverse direction of servomotor
- Gear Lubricating Method:
  Type 4095 to 4115: Grease
  Type 4130 to 4190: Oil *

* For oil lubrication, the motor should be mounted horizontal to the shaft. Contact your Yaskawa representative about lubrication for angle mounting.

3

Servomotor Model SGMGH-	Servomotor			Gear Output					Moment of Inertia J ×10^{-4} kg·m^2 (×10^{-3}lb·in·s^2)	
	Output W	Rated Speed min^{-1}	Rated Torque N·m (lb·in)	Gear Ratio	Rated Torque/ Efficiency N·m/% (lb·in/%)	Instantaneous Peak Torque/ Effective N·m/% (lb·in/%)	Rated Speed min^{-1}	Max. Speed min^{-1}	Motor + Gears	Gears
05A□A□A6	0.45	1500	2.84 (25)	1/6	13.6/80 (120/80)	42.8/80 (379/80)	250	500	9.20 (8.14)	1.96 (1.73)
05D□A□A6										
05A□A□B6				1/11	25.0/80 (221/80)	78.5/80 (695/80)	136	272	8.84 (7.82)	1.6 (1.42)
05D□A□B6										
05A□A□C6				1/21	44.8/70 (398/70)	140/75 (1239/75)	71	142	8.39 (7.43)	1.15 (1.02)
05D□A□C6										
05A□A□76				1/29	66.0/80 (584/80)	207/80 (1832/80)	51	103	8.41 (7.44)	1.17 (1.04)
05D□A□76										
09A□A□A6	0.85		5.39 (48)	1/6	25.9/80 (229/80)	66.3/80 (587/80)	250	500	15.7 (13.9)	1.8 (1.59)
09D□A□A6										
09A□A□B6				1/11	47.4/80 (420/80)	122/80 (1080/80)	136	272	15.3 (13.5)	1.4 (1.24)
09D□A□B6										
09A□A□C6				1/21	79.3/70 (702/70)	203/70 (1797/70)	71	142	15.9 (14.1)	2.0 (1.77)
09D□A□C6										
09A□A□76				1/29	125/75 (1106/75)	321/80 (2841/80)	51	103	16.1 (14.3)	2.2 (1.95)
09D□A□76										

3.3.2 SGMGH Servomotors (1500min^{-1}) With Standard Backlash Gears

Servomotor Model SGMGH-	Servomotor			Gear Output					Moment of Inertia J $\times10^{-4}$ kg·m^2 ($\times10^{-3}$lb·in·s^2)	
	Out-put W	Rated Speed min^{-1}	Rated Torque N·m (lb·in)	Gear Ratio	Rated Torque/ Efficiency N·m/% (lb·in/%)	Instanta-neous Peak Torque/ Effective N·m/% (lb·in/%)	Rated Speed min^{-1}	Max. Speed min^{-1}	Motor + Gears	Gears
13A□A□A6	1.3	1500	8.34 (74)	1/6	40.0/80 (354/80)	112/80 (991/80)	250	500	22.3 (19.7)	1.8 (1.59)
13D□A□A6										
13A□A□B6				1/11	68.7/80 (608/80)	192/75 (1699/75)	136	272	23.4 (20.7)	2.9 (2.57)
13D□A□B6										
13A□A□C6				1/21	140/75 (1239/75)	392/80 (3470/80)	71	142	22.5 (19.9)	2.0 (1.77)
13D□A□C6										
13A□A□76				1/29	193/80 (1708/80)	541/80 (4788/80)	51	103	21.4 (18.9)	0.9 (0.797)
13D□A□76										
20A□A□A6	1.8		11.5 (102)	1/6	55.1/80 (488/80)	138/80 (1221/80)	250	500	38.0 (33.6)	6.3 (5.58)
20D□A□A6										
20A□A□B6				1/11	101/80 (894/80)	253/80 (2239/80)	136	272	36.5 (32.3)	4.8 (4.25)
20D□A□B6										
20A□A□C6				1/21	193/75 (1708/75)	482/80 (4266/80)	71	142	37.6 (33.3)	5.9 (5.22)
20D□A□C6										
20A□A□76				1/29	266/80 (2354/80)	666/80 (5895/80)	51	103	37.3 (33.0)	5.6 (4.96)
20D□A□76										
30A□A□A6	2.9		18.6 (165)	1/6	89.4/80 (791/80)	217/80 (1921/80)	250	500	52.3 (46.3)	6.3 (5.58)
30D□A□A6										
30A□A□B6				1/11	164/80 (1452/80)	397/80 (3514/80)	136	272	50.8 (45.0)	4.8 (4.25)
30D□A□B6										
30A□A□C6				1/21	313/80 (2770/80)	758/80 (6709/80)	71	142	51.9 (45.9)	5.9 (5.22)
30D□A□C6										
30A□A□76				1/29	432/75 (3824/75)	1049/80 (9285/80)	51	103	91.9 (81.3)	45.9 (40.6)
30D□A□76										
44A□A□A6	4.4		28.4 (252)	1/6	136/80 (1024/80)	341/80 (3018/80)	250	500	79.5 (70.4)	12.0 (10.6)
44A□A□B6				1/11	250/80 (2213/80)	625/80 (5532/80)	136	272	75.2 (66.6)	7.7 (6.82)
44A□A□C6				1/21	477/80 (4222/80)	1196/80 (10586/80)	71	142	115 (102)	47.5 (42.0)
44A□A□76				1/29	660/80 (5842/80)	1646/80 (14569/80)	51	103	131 (116)	63.5 (56.2)
55A□A□A6	5.5		35.0 (310)	1/6	168/80 (1487/80)	420/80 (3717/80)	250	500	103 (91.2)	14.0 (12.4)
55A□A□B6				1/11	308/80 (2726/80)	771/80 (6824/80)	136	272	98.8 (87.4)	9.8 (8.67)
55A□A□C6				1/21	588/80 (5204/80)	1470/80 (13011/80)	71	142	168 (149)	79.0 (69.9)
55A□A□76				1/29	811/80 (7178/80)	2029/80 (17959/80)	51	103	166 (147)	77.0 (68.2)

Servomotor Model SGMGH-	Servomotor			Gear Output					Moment of Inertia J $\times10^{-4}$ kg·m^2 ($\times10^{-3}$lb·in·s^2)	
	Out-put W	Rated Speed min^{-1}	Rated Torque N·m (lb·in)	Gear Ratio	Rated Torque/ Efficiency N·m/% (lb·in/%)	Instanta-neous Peak Torque/ Effective N·m/% (lb·in/%)	Rated Speed min^{-1}	Max. Speed min^{-1}	Motor + Gears	Gears
75A□A□B6	7.5	1500	48.0 (425)	1/11	422/80 (3735/80)	1039/80 (9196/80)	136	272	190 (168)	65.0 (57.5)
75A□A□C6				1/21	807/80 (7143/80)	1989/80 (17605/80)	71	142	204 (181)	79.0 (69.9)
75A□A□76				1/29	1117/80 (9887/80)	2754/80 (24376/80)	51	103	216 (191)	91.0 (80.5)
1AA□A□B6	11		70	1/11	615/80 (5443/80)	1548/80 (13700/80)	136	182	370 (327)	90.0 (79.7)
1AA□A□C6				1/21	1176/80 (10408/80)	2950/80 (26110/80)	71	95	376 (333)	95.0 (84.1)
1AA□A□76				1/29	1627/80 (14400/80)	4067/80 (35996/80)	51	69	519 (459)	238.0 (211)

Note: 1. For the shaft center allowable radial load, refer to the servomotor dimensional drawing.
2. Output torque and motor speed produce the following trends in efficiency. Values in the table are at the rated motor speed.
3. 15-kW servomotors do not equipped with gears.

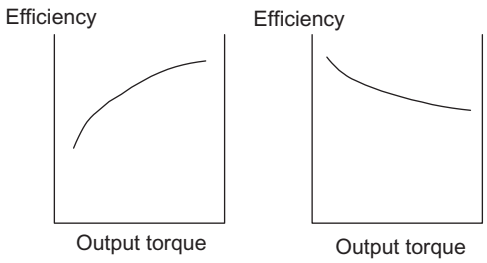

3.3.3 SGMGH Servomotors (1500min^{-1}) With Low-backlash Gears

- Time Rating: Continuous
- Vibration Class: 15 µm or below
- Insulation Resistance: 500 VDC, 10 MΩ min.
- Ambient Temperature: 0 to 40°C (32 to 104°F)
- Excitation: Permanent magnet
- Mounting: Flange-mounted (Omni-directional mounting)
- Gear Lubricating Method: Grease
- Gear Mechanism: Planetary gear mechanism
- Thermal Class: F
- Withstand Voltage:
  200 V Servomotors: 1500 VAC for one minute
  400 V Servomotors: 1800 VAC for one minute
- Enclosure: Totally enclosed, IP44 self-cooled (or the equivalent)
- Ambient Humidity: 20% to 80% (no condensation)
- Drive Method: Direct drive
- Backlash: 0.05° (3 min) at the gear output shaft
- Gear Rotation Direction: Same direction as servomotor

3.3.3 SGMGH Servomotors (1500min^{-1}) With Low-backlash Gears

Servomotor Model SGMGH-	Servomotor			Gear Output					Moment of Inertia J ×10^{-4} kg·m^2 (×10^{-3} lb·in·s^2)	
	Output W	Rated Speed min^{-1}	Rated Torque N·m (lb·in)	Gear Ratio	Rated Torque/ Efficiency *2 N·m/% (lb·in/%)	Instantaneous Peak Torque/ Effective N·m/% (lb·in/%)	Rated Speed min^{-1}	Max. Speed *1 min^{-1}	Motor + Gears	Gears
05A□AL14	0.45	1500	2.84 (25)	1/5	11.4/80 (101/80)	35.7/80 (316/80)	300	600	8.50 (7.52)	1.26 (1.12)
05D□AL14										
05A□AL24				1/9	20.4/80 (181/80)	64.2/80 (568/80)	167	334	8.18 (7.24)	0.94 (0.832)
05D□AL24										
05A□AL54				1/20	45.4/80 (402/80)	143/80 (1266/80)	75	150	11.9 (10.5)	4.66 (4.12)
05D□AL54										
05A□AL74				1/29	65.9/80 (583/80)	207/80 (1832/80)	51	102	10.0 (8.85)	2.76 (2.44)
05D□AL74										
05A□AL84				1/45	102/80 (903/80)	321/80 (2841/80)	33	66	9.05 (8.01)	1.81 (1.60)
05D□AL84										
09A□AL14	0.85		5.39 (48)	1/5	21.6/80 (191/80)	55.2/80 (489/80)	300	600	15.2 (13.5)	1.30 (1.15)
09D□AL14										
09A□AL24				1/9	38.8/80 (343/80)	74.5/60 (659/60)	167	334	14.8 (13.1)	0.90 (0.797)
09D□AL24										
09A□AL54				1/20	86.2/80 (763/80)	221/80 (1956/80)	75	150	18.6 (16.5)	4.70 (4.16)
09D□AL54										
09A□AL74				1/29	125/80 (1106/80)	320/80 (2832/80)	51	102	16.7 (14.8)	2.80 (2.48)
09D□AL74										
09A□AL84				1/45	194/80 (1717/80)	497/80 (4399/80)	33	66	18.4 (16.3)	4.50 (3.98)
09D□AL84										
13A□AL14	1.3		8.34 (74)	1/5	33.4/80 (296/80)	93.2/80 (825/80)	300	600	27.7 (24.5)	7.20 (6.37)
13D□AL14										
13A□AL24				1/9	60.0/80 (531/80)	168/80 (1487/80)	167	334	25.3 (22.4)	4.80 (4.25)
13D□AL24										
13A□AL54				1/20	133/80 (1177/80)	373/80 (3301/80)	75	150	27.4 (24.3)	6.90 (6.11)
13D□AL54										
13A□AL74				1/29	193/80 (1708/80)	541/80 (4788/80)	51	102	30.9 (27.3)	10.4 (9.21)
13D□AL74										
13A□AL84				1/45	300/80 (2655/80)	839/80 (7426/80)	33	66	27.2 (24.1)	6.70 (5.93)
13D□AL84										
20A□AL14	1.8		11.5 (102)	1/5	46.0/80 (407/80)	115/80 (1018/80)	300	600	41.9 (37.1)	10.2 (9.03)
20D□AL14										
20A□AL24				1/9	82.8/80 (733/80)	207/80 (1832/80)	167	334	39.5 (35.0)	7.80 (6.90)
20D□AL24										
20A□AL54				1/20	184/80 (1629/80)	459/80 (4063/80)	75	150	51.9 (45.9)	20.2 (17.9)
20D□AL54										
20A□AL74				1/29	267/80 (2363/80)	666/80 (5895/80)	51	102	45.1 (39.9)	13.4 (11.9)
20D□AL74										

Servomotor Model SGMGH-	Servomotor			Gear Output					Moment of Inertia J $\times10^{-4}$ kg·m^2 ($\times10^{-3}$ lb·in·s^2)	
	Out-put W	Rated Speed min^{-1}	Rated Torque N·m (lb·in)	Gear Ratio	Rated Torque/ Efficiency *2 N·m/% (lb·in/%)	Instanta-neous Peak Torque/ Effective N·m/% (lb·in/%)	Rated Speed min^{-1}	Max. Speed *1 min^{-1}	Motor + Gears	Gears
30A□AL14	2.9	1500	18.6 (165)	1/5	74.4/80 (659/80)	182/80 (1611/80)	300	600	66.4 (58.8)	20.4 (18.1)
30D□AL14										
30A□AL24				1/9	134/80 (1186/80)	328/80 (2903/80)	167	334	58.5 (51.8)	12.5 (11.1)
30D□AL24										
30A□AL54				1/20	298/80 (2638/80)	730/80 (6461/80)	75	150	66.2 (58.6)	20.2 (17.9)
30D□AL54										
44A□AL14	4.4		28.4 (251)	1/5	114/80 (1009/80)	284/80 (2514/80)	300	600	87.9 (77.8)	20.4 (18.1)
44A□AL24				1/9	204/80 (1806/80)	512/80 (4532/80)	167	334	80.0 (70.8)	12.5 (11.1)

Note: For the shaft center allowable radial load, refer to the servomotor dimensional drawing.

* 1. The maximum input motor speed of the gears is 4000 min^{-1}.

* 2. Output torque and motor speed produce the following trends in efficiency. Values in the table are at the rated motor speed.

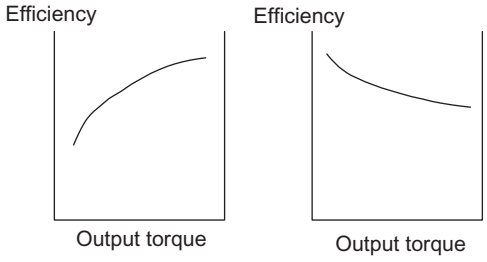

3

3.4 Ratings and Specifications of SGMGH (1000min^{-1})

3.4.1 SGMGH Servomotors (1000min^{-1}) Without Gears

(1) Ratings and Specifications

- Time Rating: Continuous
- Vibration Class: 15 µm or below
- Insulation Resistance: 500 VDC, 10 MΩ min.
- Ambient Temperature: 0 to 40°C (32 to 104°F)
- Excitation: Permanent magnet
- Mounting: Flange method
- Thermal Class: F
- Withstand Voltage: 1500 VAC for one minute
- Enclosure: Totally enclosed, IP67 self-cooled (except for shaft opening)
- Ambient Humidity: 20% to 80% (no condensation)
- Drive Method: Direct drive

Voltage		200 V							
Servomotor Model SGMGH-		03A□B	06A□B	09A□B	12A□B	20A□B	30A□B	40A□B	55A□B
Rated Output *1	kW	0.3	0.6	0.9	1.2	2.0	3.0	4.0	5.5
Rated Torque *1	N·m	2.84	5.68	8.62	11.5	19.1	28.4	38.2	52.6
	lb·in *2	25	50	76	102	169	252	338	466
Instantaneous Peak Torque *1	N·m	7.17	14.1	19.3	28.0	44.0	63.7	107	136.9
	lb·in *2	63	125	171	248	390	564	947	1212
Rated Current *1	A (rms)	3.0	5.7	7.6	11.6	18.5	24.8	30	43.2
Instantaneous Max. Current *1	A (rms)	7.3	13.9	16.6	28	42	56	84	110
Rated Speed *1	min^{-1}	1000							
Max. Speed *1	min^{-1}	2000							
Torque Constant	N·m/A (rms)	1.03	1.06	1.21	1.03	1.07	1.19	1.34	1.26
	lb·in/A (rms) *2	9.12	9.38	10.7	9.12	9.47	10.5	11.9	11.2
Rotor Moment of Inertia J*2	x10^{-4} kg·m^2	7.24	13.9	20.5	31.7	46.0	67.5	89.0	125
		(9.34)	(16.0)	(22.6)	(40.2)	(54.5)	(76.0)	(97.5)	(134)
	x10^{-3} lb·in·s^2 *2	6.41	12.3	18.2	28.1	40.7	59.8	78.8	111
		(8.28)	(14.2)	(20.1)	(35.6)	(48.2)	(67.3)	(86.3)	(119)
Rated Power Rate *1	kW/s^2	11.2	23.2	36.3	41.5	79.4	120	164	221
Rated Angular Acceleration *1	rad/s^2	3930	4080	4210	3620	4150	4210	4290	4200

* 1. These items and torque-motor speed characteristics quoted in combination with an SGDM/SGDH SERVOPACK are at an armature winding temperature of 20°C (68°F).
* 2. The values in the parentheses are those for motors with holding brakes.

Note: These characteristics are values with the following iron plate (heat sinks) attached for cooling.
SGMGH-03, 06, and 09: 400 × 400 × 20 (mm) [15.75 × 15.75 × 0.79 (in)]
SGMGH-12, 20, 30, 40 and 55: 550 × 550 × 30 (mm) [21.65 × 21.65 × 1.18 (in)]

(2) Holding Brake Moment of Inertia

The moment of inertia of the servomotor with holding brake is expressed using the following equation.

(The moment of inertia of the servomotor with holding brake) =
(rotor moment of inertia) + (brake moment of inertia)

Servomotor Model SGMGH-		03A□B	06A□B	09A□B	12A□B	20A□B	30A□B	40A□B	55A□B
Holding Brake Moment of Inertia J	×10^{-4} kg·m^2	2.10			8.50				
	×10^{-3} lb·in·s^2*	1.86			7.52				

* These values are reference values.

(3) Torque-motor Speed Characteristics

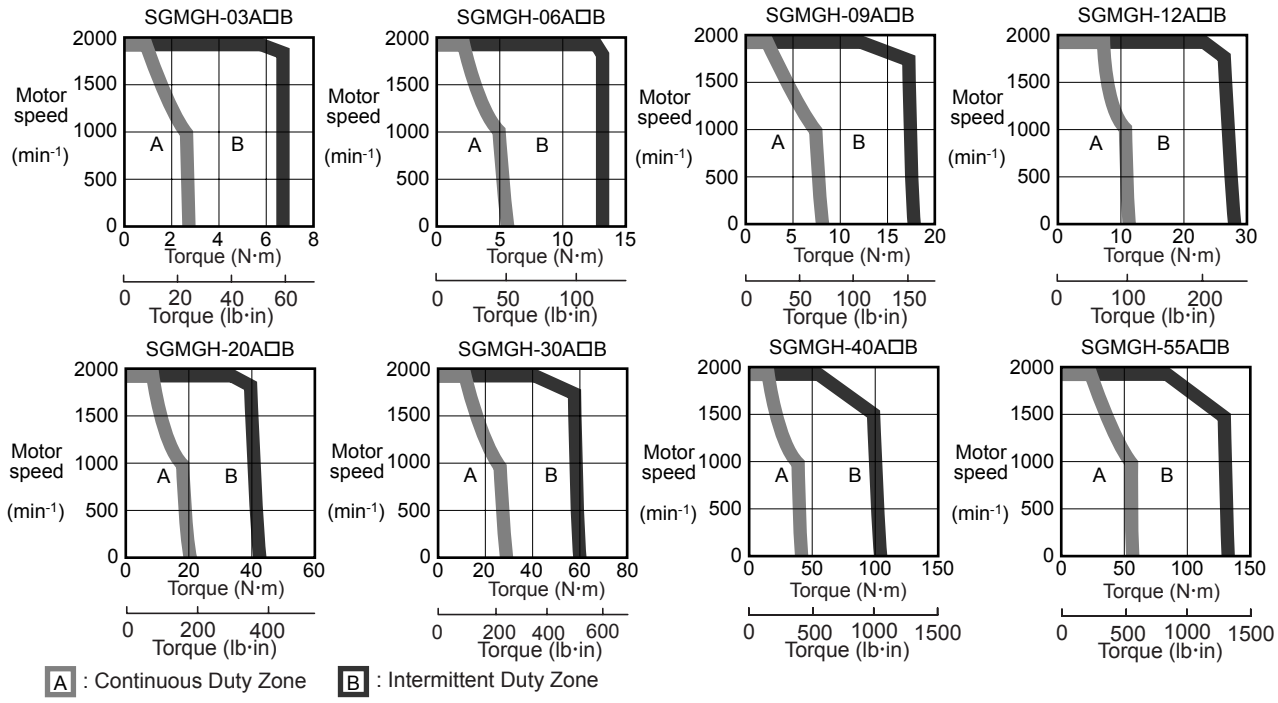

(4) Holding Brake Electrical Specifications

Holding Brake Rated Voltage	Servomotor Model	Servomotor Capacity W	Holding Brake Specifications			
			Capacity W	Holding Torque N·m (lb·in)	Coil Resistance Ω (at 20 °C (68 °F))	Rated Current A (at 20 °C (68 °F))
90 VDC	SGMGH-03	300	10.1	4.41 (39.0)	804	0.11
	SGMGH-06	600	10.1	12.7 (112)	804	0.11
	SGMGH-09	900	10.1	12.7 (112)	804	0.11
	SGMGH-12	1200	18.5	43.1 (381)	438	0.21
	SGMGH-20	2000	18.5	43.1 (381)	438	0.21
	SGMGH-30	3000	18.5	43.1 (381)	438	0.21
	SGMGH-40	4000	23.5	72.6 (643)	327	0.28
	SGMGH-55	5500	23.5	72.6 (643)	327	0.28
24 VDC	SGMGH-03	300	9.85	4.41 (39.0)	58.7	0.41
	SGMGH-06	600	9.85	12.7 (112)	58.7	0.41
	SGMGH-09	900	9.85	12.7 (112)	58.7	0.41
	SGMGH-12	1200	18.5	43.1 (381)	31.1	0.77
	SGMGH-20	2000	18.5	43.1 (381)	31.1	0.77
	SGMGH-30	3000	18.5	43.1 (381)	31.1	0.77
	SGMGH-40	4000	23.5	72.6 (643)	22.8	1.05
	SGMGH-55	5500	23.5	72.6 (643)	22.8	1.05

Note: The holding brake is only used to hold the load and cannot be used to stop the servomotor.

3.4.2 SGMGH Servomotors (1000min^{-1}) With Standard Backlash Gears

- Time Rating: Continuous
- Vibration Class: 15 μm or below
- Insulation Resistance: 500 VDC, 10 MΩ min.
- Ambient Temperature: 0 to 40°C (32 to 104°F)
- Mounting: Foot and flange-mounted
  Type 4095 to 4115: Omni-directional mounting
  Type 4130 to 4190: Horizontal mounting to shaft
- Gear Lubricating Method:
  Type 4095 to 4115: Grease
  Type 4130 to 4190: Oil*
- Excitation: Permanent magnet
- Thermal Class: F
- Withstand Voltage: 1500 VAC for one minute
- Enclosure: Totally enclosed, IP44 self-cooled (or the equivalent)
- Ambient Humidity: 20% to 80% (no condensation)
- Drive Method: Direct drive
- Backlash: Roughly 0.6 to 2° at gear output shaft
- Gear Rotation Direction: Reverse direction of servomotor
- Gear Mechanism: Planetary gear mechanism

* For oil lubrication, the motor should be mounted horizontal to the shaft. Contact your Yaskawa representative about lubrication for angle mounting.

3

Servomotor Model SGMGH-	Servomotor			Gear Output					Moment of Inertia J $\times10^{-4}$ kg·m^2 ($\times10^{-3}$ lb·in·s^2)	
	Output W	Rated Speed min^{-1}	Rated Torque N·m (lb·in)	Gear Ratio	Rated Torque/ Efficiency N·m/% (lb·in/%)	Instantaneous Peak Torque/ Effective N·m/% (lb·in/%)	Rated Speed min^{-1}	Max. Speed min^{-1}	Motor + Gears	Gears
03A□B□A6	0.3	1000	2.84 (25)	1/6	13.6/80 (120/80)	34.4/80 (304/80)	166	333	9.20 (8.14)	1.96 (1.73)
03A□B□B6				1/11	25.0/80 (221/80)	63.1/80 (558/80)	90	181	8.84 (7.82)	1.6 (1.42)
03A□B□C6				1/21	41.8/70 (370/70)	106/70 (938/70)	47	95	8.39 (7.43)	1.15 (1.02)
03A□B□76				1/29	65.9/80 (583/80)	167/80 (1478/80)	34	68	8.41 (7.44)	1.17 (1.59)
06A□B□A6	0.6		5.68 (50)	1/6	27.2/80 (241/80)	67.7/80 (599/80)	166	333	15.7 (13.9)	1.8 (1.59)
06A□B□B6				1/11	50.0/80 (443/80)	125/80 (1106/80)	90	181	15.3 (13.5)	1.4 (1.24)
06A□B□C6				1/21	83.5/70 (739/70)	208/70 (1841/70)	47	95	15.9 (14.1)	2.0 (1.77)
06A□B□76				1/29	123/75 (1089/75)	307/75 (2717/75)	34	68	16.1 (14.3)	2.2 (1.95)
09A□B□A6	0.9		8.62 (76)	1/6	41.4/80 (366/80)	92.7/80 (820/80)	166	333	22.3 (19.7)	1.8 (1.59)
09A□B□B6				1/11	75.9/80 (672/80)	170/80 (1505/80)	90	181	21.9 (19.4)	1.4 (1.24)
09A□B□C6				1/21	136/75 (1204/75)	304/75 (2691/75)	47	95	22.5 (19.9)	2.0 (1.77)
09A□B□76				1/29	200/80 (1770/80)	448/80 (3965/80)	34	68	22.8 (20.2)	2.3 (2.04)

3.4.2 SGMGH Servomotors (1000min^{-1}) With Standard Backlash Gears

Servomotor Model SGMGH-	Servomotor			Gear Output					Moment of Inertia J $\times10^{-4}$ kg·m^2 ($\times10^{-3}$ lb·in·s^2)	
	Out-put W	Rated Speed min^{-1}	Rated Torque N·m (lb·in)	Gear Ratio	Rated Torque/ Efficiency N·m/% (lb·in/%)	Instanta-neous Peak Torque/ Effective N·m/% (lb·in/%)	Rated Speed min^{-1}	Max. Speed min^{-1}	Motor + Gears	Gears
12A□B□A6	1.2	1000	11.5 (102)	1/6	55.0/80 (487/80)	126/80 (1115/80)	166	333	38.0 (33.6)	6.3 (5.58)
12A□B□B6				1/11	101/80 (894/80)	247/80 (2186/80)	90	181	36.5 (32.3)	4.8 (4.25)
12A□B□C6				1/21	180/75 (1593/75)	441/75 (3903/75)	47	95	37.6 (33.3)	5.9 (5.22)
12A□B□76				1/29	266/80 (2354/80)	651/80 (5762/80)	34	68	37.3 (33.0)	5.6 (4.96)
20A□B□A6	2.0		19.1 (169)	1/6	91.7/80 (812/80)	212/80 (1876/80)	166	333	52.3 (46.3)	6.3 (5.58)
20A□B□B6				1/11	169/80 (1496/80)	387/80 (3425/80)	90	181	50.8 (45.0)	4.8 (4.25)
20A□B□C6				1/21	321/80 (2841/80)	739/80 (6541/80)	47	95	51.9 (45.9)	5.9 (5.22)
20A□B□76				1/29	416/75 (3682/75)	958/75 (8479/75)	34	68	91.9 (81.3)	45.9 (40.6)
30A□B□A6	3.0		28.4 (251)	1/6	136/80 (1204/80)	306/80 (2708/80)	166	333	79.5 (70.4)	12.0 (10.6)
30A□B□B6				1/11	250/80 (2213/80)	561/80 (4965/80)	90	181	75.2 (66.6)	7.7 (6.82)
30A□B□C6				1/21	477/80 (4222/80)	1068/80 (9453/80)	47	95	115 (102)	47.5 (42.0)
30A□B□76				1/29	660/80 (5842/80)	1480/80 (13099/80)	34	68	131 (116)	63.5 (56.2)
40A□B□A6	4.0		38.2 (338)	1/6	183/80 (1620/80)	453/70 (4010/70)	166	333	103 (91.2)	14.0 (12.4)
40A□B□B6				1/11	336/80 (2974/80)	830/70 (7346/70)	90	181	98.8 (87.4)	9.8 (8.67)
40A□B□C6				1/21	641/80 (5673/80)	1588/70 (14055/70)	47	95	168 (149)	79.0 (69.9)
40A□B□76				1/29	886/80 (7842/80)	2185/70 (19339/70)	34	68	166 (147)	77.0 (68.2)
55A□B□B6	5.5		52.6 (466)	1/11	462/80 (4089/80)	1205/80 (10665/80)	90	181	190 (168)	65.0 (57.5)
55A□B□C6				1/21	883/80 (7815/80)	2300/80 (20357/80)	47	95	204 (181)	79.0 (69.9)
55A□B□76				1/29	1220/80 (10798/80)	3176/80 (28111/80)	34	68	216 (191)	91.0 (80.5)

Note: Output torque and motor speed produce the following trends in efficiency. Values in the table are at the rated motor speed.

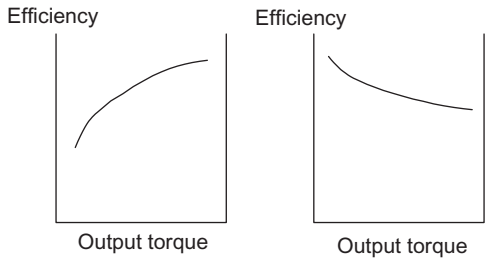

3.4.3 SGMGH Servomotors (1000 min^{-1}) With Low-backlash Gears

- Time Rating: Continuous
- Vibration Class: 15 µm or below
- Insulation Resistance: 500 VDC, 10 MΩ min.
- Ambient Temperature: 0 to 40°C (32 to 104°F)
- Excitation: Permanent magnet
- Mounting: Flange method (can be mounted in any direction)
- Gear Mechanism: Planetary gear mechanism
- Thermal Class: F
- Withstand Voltage: 1500 VAC for one minute
- Enclosure: Totally enclosed, IP44 self-cooled (or the equivalent)
- Ambient Humidity: 20% to 80% (no condensation)
- Drive Method: Direct drive
- Gear Lubricating Method: Grease
- Backlash: 0.05° (3 min) at the gear output shaft
- Gear Rotation Direction: Same direction as servomotor

Servomotor Model SGMGH-	Servomotor			Gear Output					Moment of Inertia J $\times10^{-4}$ kg·m^2 ($\times10^{-3}$ lb·in·s^2)	
	Output W	Rated Speed min^{-1}	Rated Torque N·m (lb·in)	Gear Ratio	Rated Torque/ Efficiency N·m/% (lb·in/%)	Instantaneous Peak Torque/ Effective N·m/% (lb·in/%)	Rated Speed min^{-1}	Max. Speed min^{-1}	Motor + Gears	Gears
03A□BL14	0.3	1000	2.84 (25)	1/5	11.4/80 (101/80)	28.7/80 (254/80)	200	400	8.50 (7.52)	1.26 (1.12)
03A□BL24				1/9	20.4/80 (181/80)	51.6/80 (457/80)	111	222	8.18 (7.24)	0.96 (0.85)
03A□BL54				1/20	45.4/80 (402/80)	115/80 (1018/80)	50	100	8.64 (7.65)	1.40 (1.24)
03A□BL74				1/29	65.9/80 (583/80)	166/80 (1469/80)	34	68	10.0 (8.85)	2.76 (2.44)
03A□BL84				1/45	102/80 (903/80)	258/80 (2284/80)	22	44	9.05 (8.01)	1.81 (1.60)
06A□BL14	0.6		5.68 (50)	1/5	22.7/80 (201/80)	56.4/80 (499/80)	200	400	15.2 (13.5)	1.30 (1.15)
06A□BL24				1/9	40.9/80 (362/80)	82.5/80 (730/80)	111	222	14.8 (13.1)	0.90 (0.797)
06A□BL54				1/20	90.9/80 (805/80)	226/80 (2000/80)	50	100	18.6 (16.5)	4.70 (4.16)
06A□BL74				1/29	132/80 (1168/80)	327/80 (2894/80)	34	68	16.7 (14.8)	2.80 (2.48)
06A□BL84				1/45	204/80 (1806/80)	508/80 (4496/80)	22	44	18.4 (16.3)	4.50 (3.98)

3.4.3 SGMGH Servomotors (1000 min^{-1}) With Low-backlash Gears

Servomotor Model SGMGH-	Servomotor			Gear Output					Moment of Inertia J $\times10^{-4}$ kg·m^2 ($\times10^{-3}$ lb·in·s^2)	
	Out-put W	Rated Speed min^{-1}	Rated Torque N·m (lb·in)	Gear Ratio	Rated Torque/ Efficiency N·m/% (lb·in/%)	Instanta-neous Peak Torque/ Effective N·m/% (lb·in/%)	Rated Speed min^{-1}	Max. Speed min^{-1}	Motor + Gears	Gears
09A□BL14	0.9	1000	8.62 (76)	1/5	34.5/80 (305/80)	77.2/80 (683/80)	200	400	23.9 (21.2)	3.40 (3.01)
09A□BL24				1/9	62.1/80 (550/80)	139/80 (1230/80)	111	222	25.3 (22.4)	4.80 (4.25)
09A□BL54				1/20	138/80 (1221/80)	309/80 (2735/80)	50	100	27.4 (24.3)	6.90 (6.11)
09A□BL74				1/29	200/80 (1770/80)	448/80 (3965/80)	34	68	30.9 (27.3)	10.4 (9.21)
09A□BL84				1/45	310/80 (2744/80)	695/80 (6151/80)	22	44	27.2 (24.1)	6.70 (5.93)
12A□BL14	1.2		11.5 (102)	1/5	46/80 (407/80)	112/80 (991/80)	200	400	41.9 (37.1)	10.2 (9.03)
12A□BL24				1/9	82.8/80 (733/80)	202/80 (1788/80)	111	222	39.5 (35.0)	7.80 (6.90)
12A□BL54				1/20	184/80 (1629/80)	448/80 (3965/80)	50	100	51.9 (45.9)	20.2 (17.9)
12A□BL74				1/29	267/80 (2363/80)	650/80 (5753/80)	34	68	45.1 (39.9)	13.4 (11.9)
12A□BL84				1/45	414/80 (3664/80)	1008/80 (8922/80)	22	44	41.4 (36.6)	9.70 (8.59)
20A□BL14	2.0		19.1 (169)	1/5	76.4/80 (676/80)	176/80 (1558/80)	200	400	56.2 (49.7)	10.2 (9.03)
20A□BL24				1/9	138/80 (1221/80)	317/80 (2806/80)	111	222	53.8 (47.6)	7.80 (6.90)
20A□BL54				1/20	306/80 (2708/80)	704/80 (6231/80)	50	100	66.2 (58.6)	20.2 (17.9)
30A□BL14	3.0		28.4 (251)	1/5	114/80 (1009/80)	255/80 (2257/80)	200	400	87.9 (77.8)	20.4 (18.1)
30A□BL24				1/9	204/80 (1806/80)	459/80 (4063/80)	111	222	80.0 (70.8)	12.5 (11.1)

Note: Output torque and motor speed produce the following trends in efficiency. Values in the table are at the rated motor speed.

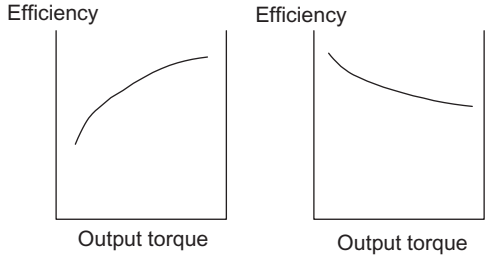

3.5 Ratings and Specifications of SGMSH (3000min^{-1})

3.5.1 SGMSH Servomotors (3000min^{-1}) Without Gears

(1) Ratings and Specifications

- Time Rating: Continuous
- Vibration Class: 15 µm or below
- Insulation Resistance: 500 VDC, 10 MΩ min.
- Ambient Temperature: 0 to 40°C (32 to 104°F)
- Excitation: Permanent magnet
- Mounting: Flange method
- Thermal Class: F
- Withstand Voltage:
  200 V Servomotors: 1500 VAC for one minute
  400 V Servomotors: 1800 VAC for one minute
- Enclosure: Totally enclosed, IP67 self-cooled (except for shaft opening)
- Ambient Humidity: 20% to 80% (no condensation)
- Drive Method: Direct drive

(a) 200-V Class

Voltage		200 V					
Servomotor Model SGMSH-		10A□A	15A□A	20A□A	30A□A	40A□A	50A□A
Rated Output *1	kW	1.0	1.5	2.0	3.0	4.0	5.0
Rated Torque *1	N·m	3.18	4.9	6.36	9.8	12.6	15.8
	lb·in *3	28.2	43	56.4	87	112	140
Instantaneous Peak Torque *1	N·m	9.54	14.7	19.1	29.4	37.8	47.6
	lb·in *3	84.4	130	169	260	336	422
Rated Current *1	A (rms)	5.7	9.7	12.7	18.8	25.4	28.6
Instantaneous Max. Current *1	A (rms)	17	28	42	56	77	84
Rated Speed *1	min^{-1}	3000					
Max. Speed *1	min^{-1}	5000					
Torque Constant	N·m/A (rms)	0.636	0.561	0.544	0.573	0.53	0.60
	lb·in/A (rms) *3	5.63	4.97	4.81	5.07	4.69	5.31
Rotor Moment of Inertia J *2	x10^{-4} kg·m^2	1.74	2.47	3.19	7.00	9.60	12.3
		(2.07)	(2.80)	(3.52)	(9.10)	(11.7)	(14.4)
	x10^{-3} lb·in·s^2 *3	1.54	2.19	2.82	6.20	8.50	10.9
		(1.83)	(2.48)	(3.11)	(8.06)	(10.4)	(12.8)
Rated Power Rate *1	kW/s	57.9	97.2	127	137	166	202
Rated Angular Acceleration *1	rad/s^2	18250	19840	19970	14000	13160	12780

Note: Refer to the next page for the notes.

(b) 400-V Class

Voltage		400 V					
Servomotor Model SGMSH-		10D□A	15D□A	20D□A	30D□A	40D□A	50D□A
Rated Output *1	kW	1.0	1.5	2.0	3.0	4.0	5.0
Rated Torque *1	N·m	3.18	4.9	6.36	9.8	12.6	15.8
	lb·in *3	28.2	43	56.4	87	112	140
Instantaneous Peak Torque *1	N·m	9.54	14.7	19.1	29.4	37.8	47.6
	lb·in *3	84.4	130	169	260	336	422
Rated Current *1	A (rms)	2.8	4.7	6.2	8.9	12.5	13.8
Instantaneous Max. Current *1	A (rms)	8.5	14	19.5	28	38	42
Rated Speed *1	min^{-1}	3000					
Max. Speed *1	min^{-1}	5000					
Torque Constant	N·m/A (rms)	1.27	1.15	1.12	1.19	1.07	1.24
	lb·in/A (rms) *3	11.2	10.2	9.9	10.5	9.5	11.0
Rotor Moment of Inertia J *2	x10^{-4} kg·m^2	1.74	2.47	3.19	7.0	9.60	12.3
		(2.07)	(2.80)	(3.52)	(9.10)	(11.7)	(14.4)
	x10^{-3} lb·in·s^2 *3	1.54	2.19	2.83	6.20	8.50	10.9
		(1.83)	(2.48)	(3.11)	(8.06)	(10.4)	(12.8)
Rated Power Rate *1	kW/s	57.9	97.2	127	137	166	202
Rated Angular Acceleration *1	rad/s^2	18250	19840	19970	14000	13160	12780

* 1. These items and torque-motor speed characteristics quoted in combination with an SGDM/SGDH SERVOPACK are at an armature winding temperature of 20°C (68°F).
* 2. The values in the parentheses are those for motors with holding brakes.
* 3. These values are reference values.

Note: These characteristics are values with the following aluminum plates (heat sinks) attached for cooling.
SGMSH-10, 15, and 20: 300 × 300 × 12 (mm) [11.81 × 11.81 × 0.47 (in)]
SGMSH-30, 40, and 50: 400 × 400 × 20 (mm) [15.75 × 15.75 × 0.79 (in)]

(2) Holding Brake Moment of Inertia

The moment of inertia of the servomotor with holding brake is expressed using the following equation.

(The moment of inertia of the servomotor with holding brake) = (rotor moment of inertia) + (brake moment of inertia)

Servomotor SGMSH-		10A□A 10D□A	15A□A 15D□A	20A□A 20D□A	30A□A 30D□A	40A□A 40D□A	50A□A 50D□A
Brake Moment of Inertia	kg·m^2 ×10^{-4}	0.325			2.10		
	lb·in·s^{2}x10^{-3} *	0.288			1.86		

* These values are reference values.

(3) Torque-motor Speed Characteristics

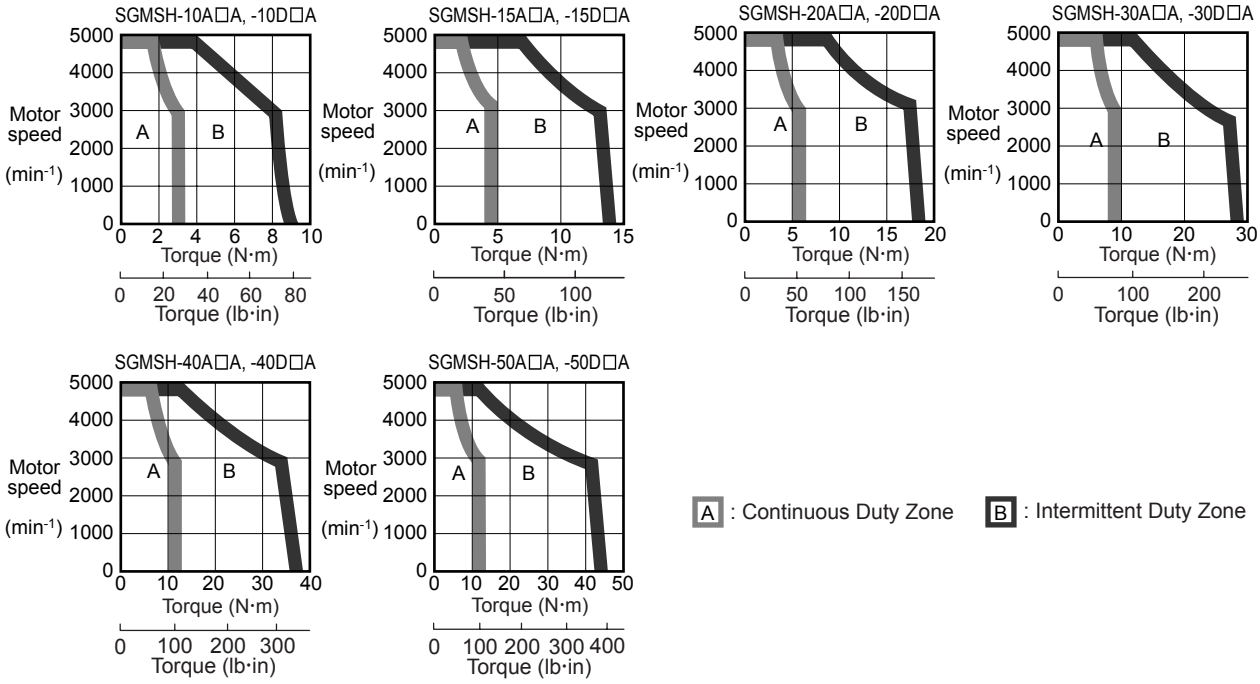

(4) Holding Brake Electrical Specifications

Holding Brake Rated Voltage	Servomotor Model	Servomotor Capacity W	Holding Brake Specifications			
			Capacity W	Holding Torque N·m (lb·in)	Coil Resistance Ω (at 20 °C (68 °F))	Rated Current A (at 20 °C (68 °F))
90 VDC	SGMSH-10	1000	7.0	7.84 (69.4)	1150	0.08
	SGMSH-15	1500	7.0	7.84 (69.4)	1150	0.08
	SGMSH-20	2000	7.0	7.84 (69.4)	1150	0.08
	SGMSH-30	3000	10.1	20.0 (177)	804	0.11
	SGMSH-40	4000	10.1	20.0 (177)	804	0.11
	SGMSH-50	5000	10.1	20.0 (177)	804	0.11

Holding Brake Rated Voltage	Servomotor Model	Servomotor Capacity W	Holding Brake Specifications			
			Capacity W	Holding Torque N·m (lb·in)	Coil Resistance Ω (at 20 °C (68 °F))	Rated Current A (at 20 °C (68 °F))
24 VDC	SGMSH-10	1000	7.0	7.84 (69.4)	82.3	0.29
	SGMSH-15	1500	7.0	7.84 (69.4)	82.3	0.29
	SGMSH-20	2000	7.0	7.84 (69.4)	82.3	0.29
	SGMSH-30	3000	9.85	20.0 (177)	58.7	0.41
	SGMSH-40	4000	9.85	20.0 (177)	58.7	0.41
	SGMSH-50	5000	9.85	20.0 (177)	58.7	0.41

Note: The holding brake is only used to hold the load and cannot be used to stop the servomotor.

3.5.2 SGMSH Servomotors (3000min^{-1}) With Low-backlash Gears

- Time Rating: Continuous
- Vibration Class: 15 µm or below
- Insulation Resistance: 500 VDC, 10 MΩ min.
- Ambient Temperature: 0 to 40°C (32 to 104°F)
- Excitation: Permanent magnet
- Mounting: Flange method (can be mounted in any direction)
- Gear Lubricating Method: Grease
- Gear Mechanism: Planetary gear mechanism
- Thermal Class: F
- Withstand Voltage: 1500 VAC for one minute
- Enclosure: Totally enclosed, IP44 self-cooled (or the equivalent)
- Ambient Humidity: 20% to 80% (no condensation)
- Drive Method: Direct drive
- Backlash: 0.05° (3 min) at the gear output shaft
- Gear Rotation Direction: Same direction as servomotor
- Max. Input Motor Speed for Gears: 4000 min^{-1}

Servomotor Model SGMSH-	Servomotor			Gear Output					Moment of Inertia J ×10^{-4} kg·m^2 (×10^{-3}lb·in·s^2)	
	Output W	Rated Speed min^{-1}	Rated Torque N·m (lb·in)	Gear Ratio	Rated Torque/Efficiency *2 N·m/% (lb·in/%)	Instantaneous Peak Torque/ Effective N·m/% (lb·in/%)	Rated Speed min^{-1}	Max. Speed *1 min^{-1}	Motor + Gears	Gears
10A□AL14	1.0	3000	3.18 (28.2)	1/5	12.7/80 (112/80)	38.2/80 (338/80)	600	800	5.18 (4.58)	3.44 (3.04)
10D□AL14										
10A□AL24				1/9	22.9/80 (203/80)	68.7/80 (608/80)	333	444	4.85 (4.29)	3.11 (2.75)
10D□AL24										
10A□AL54				1/20	50.9/80 (451/80)	153/80 (1354/80)	150	200	8.53 (7.55)	6.79 (6.01)
10D□AL54										
10A□AL74				1/29	73.8/80 (653/80)	221/80 (1956/80)	103	138	6.62 (5.86)	4.88 (4.32)
10D□AL74										
10A□AL84				1/45	115/80 (1018/80)	343/80 (3036/80)	66	89	5.66 (5.01)	3.92 (3.47)
10D□AL84										

Servomotor Model SGMSH-	Servomotor			Gear Output					Moment of Inertia J ×10^{-4} kg·m^2 (×10^{-3}lb·in·s^2)	
	Out-put W	Rated Speed min^{-1}	Rated Torque N·m (lb·in)	Gear Ratio	Rated Torque/Effi-ciency *2 N·m/% (lb·in/%)	Instanta-neous Peak Torque/ Effective N·m/% (lb·in/%)	Rated Speed min^{-1}	Max. Speed *1 min^{-1}	Motor + Gears	Gears
15A□AL14	1.5	3000	4.9 (43)	1/5	19.6/80 (173/80)	58.8/80 (520/80)	600	800	5.91 (5.23)	3.44 (3.04)
15D□AL14										
15A□AL24				1/9	35.3/80 (312/80)	106/80 (938/80)	333	444	7.24 (6.41)	4.77 (4.22)
15D□AL24										
15A□AL54				1/20	78.4/80 (694/80)	235/80 (2080/80)	150	200	9.26 (8.20)	6.79 (6.01)
15D□AL54										
15A□AL74				1/29	114/80 (1009/80)	341/80 (3018/80)	103	138	7.35 (6.51)	4.88 (4.32)
15D□AL74										
15A□AL84				1/45	176/80 (1558/80)	529/80 (4682/80)	66	89	9.05 (8.01)	6.58 (5.82)
15D□AL84										
20A□AL14	2.0		6.36 (56.4)	1/5	25.6/80 (227/80)	76.4/80 (676/80)	600	800	6.63 (5.87)	3.44 (3.04)
20D□AL14										
20A□AL24				1/9	46/80 (407/80)	138/80 (1221/80)	333	444	7.96 (7.05)	4.77 (4.22)
20D□AL24										
20A□AL54				1/20	102/80 (903/80)	306/80 (2708/80)	150	200	9.98 (8.83)	6.79 (6.01)
20D□AL54										
20A□AL74				1/29	148/80 (1310/80)	443/80 (3921/80)	103	138	13.5 (11.9)	10.3 (9.12)
20D□AL74										
20A□AL84				1/45	230/80 (2036/80)	688/80 (6089/80)	66	89	9.77 (8.65)	6.58 (5.82)
20D□AL84										
30A□AL14	3.0		9.8 (87)	1/5	39.2/80 (347/80)	118/80 (1044/80)	600	800	17.2 (15.2)	10.2 (9.03)
30D□AL14										
30A□AL24				1/9	70.5/80 (624/80)	212/80 (1876/80)	333	444	14.8 (13.1)	7.80 (6.90)
30D□AL24										
30A□AL54				1/20	157/80 (1390/80)	470/80 (4160/80)	150	200	27.2 (24.1)	20.2 (17.9)
30D□AL54										
30A□AL74				1/29	227/80 (2009/80)	682/80 (6036/80)	103	138	20.4 (18.1)	13.4 (11.9)
30D□AL74										
30A□AL84				1/45	353/80 (3124/80)	1058/80 (9364/80)	66	89	16.7 (14.8)	9.70 (8.59)
30D□AL84										
40A□AL14	4.0		12.6 (112)	1/5	50.4/80 (446/80)	151/80 (1337/80)	600	800	19.8 (17.5)	10.2 (9.03)
40A□AL24				1/9	90.7/80 (803/80)	272/80 (2407/80)	333	444	22.1 (19.6)	12.5 (11.1)
40A□AL54				1/20	202/80 (1788/80)	605/80 (5355/80)	150	200	29.8 (26.4)	20.2 (17.9)
40A□AL74				1/29	292/80 (2584/80)	877/80 (7762/80)	103	138	23.0 (20.4)	13.4 (11.9)

3.5.2 SGMSH Servomotors (3000min^{-1}) With Low-backlash Gears

Servomotor Model SGMSH-	Servomotor			Gear Output					Moment of Inertia J $\times10^{-4}$ kg·m^2 ($\times10^{-3}$lb·in·s^2)	
	Output W	Rated Speed min^{-1}	Rated Torque N·m (lb·in)	Gear Ratio	Rated Torque/Efficiency *2 N·m/% (lb·in/%)	Instantaneous Peak Torque/ Effective N·m/% (lb·in/%)	Rated Speed min^{-1}	Max. Speed *1 min^{-1}	Motor + Gears	Gears
50A□AL14	5.0	3000	15.8 (140)	1/5	63.2/80 (559/80)	190/80 (1682/80)	600	800	32.7 (28.9)	20.4 (18.1)
50A□AL24				1/9	114/80 (1009/80)	343/80 (3036/80)	333	444	24.8 (22.0)	12.5 (11.1)
50A□AL54				1/20	253/80 (2239/80)	762/80 (6744/80)	150	200	32.5 (28.8)	20.2 (17.9)

Note: For the shaft center allowable radial load, refer to the servomotor dimensional drawing.

* 1. The maximum input motor speed of the gears is 4000 min^{-1}.

* 2. Output torque and motor speed produce the following trends in efficiency. Values in the table are at the rated motor speed.

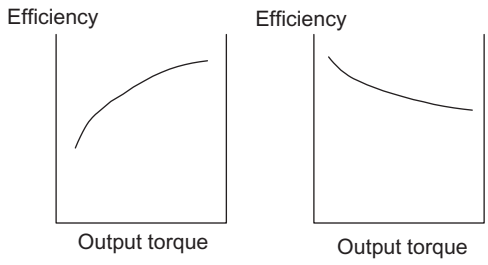

3.6 Ratings and Specifications of SGMDH (2000min^{-1})

3.6.1 SGMDH Servomotors (2000min^{-1}) With Holding Brakes

(1) Ratings and Specifications

- Time Rating: Continuous
- Vibration Class: 15 µm or below
- Insulation Resistance: 500 VDC, 10 MΩ min.
- Ambient Temperature: 0 to 40°C (32 to 104°F)
- Excitation: Permanent magnet
- Mounting: Flange method
- Thermal Class: F
- Withstand Voltage: 1500 VAC for one minute
- Enclosure: Totally enclosed, IP67 self-cooled (except for the shaft opening)
- Ambient Humidity: 20% to 80% (no condensation)
- Drive Method: Direct drive
- Holding Brake: 90 VDC, static friction torque 29.4 N·m

Voltage		200 V		
Servomotor Model SGMDH-		22A□A□B	32A□A□B	40A□A□B
Rated Output *1	kW	2.2	3.2	4.0
Rated Torque *1	N·m	10.5	15.3	19.1
	lb·in *2	92.9	135	169
Instantaneous Peak Torque *1	N·m	36.7	53.5	66.9
	lb·in *2	325	474	592
Rated Current *1	A (rms)	15.7	20.9	23.2
Instantaneous Max. Current *1	A (rms)	54	73	77
Rated Speed *1	min^{-1}	2000		
Max. Speed *1	min^{-1}	3000		
Torque Constant	N·m/A (rms)	0.72	0.78	0.92
	lb·in/A (rms) *2	6.4	6.9	8.1
Rotor Moment of Inertia J (Including Holding Brake Moment of Inertia)	x10^{-4} kg·m^2	56.6	74.2	91.8
	x10^{-3} lb·in·s^2 *2	50.1	65.7	81.3
Rated Power Rate *1	kW/s	19.5	31.5	39.7
Rated Angular Acceleration *1	rad/s^2	1850	2060	2080

* 1. These items and torque-motor speed characteristics quoted in combination with an SGDM/SGDH SERVOPACK are at an armature winding temperature of 20°C (68°F).
* 2. These values reference values.

Note: These characteristics are values with the following iron plates (heat sinks) attached for cooling.
650 × 650 × 35 (mm) [25.59 × 25.59 × 1.38 (in)]

(2) Torque-motor Speed Characteristics

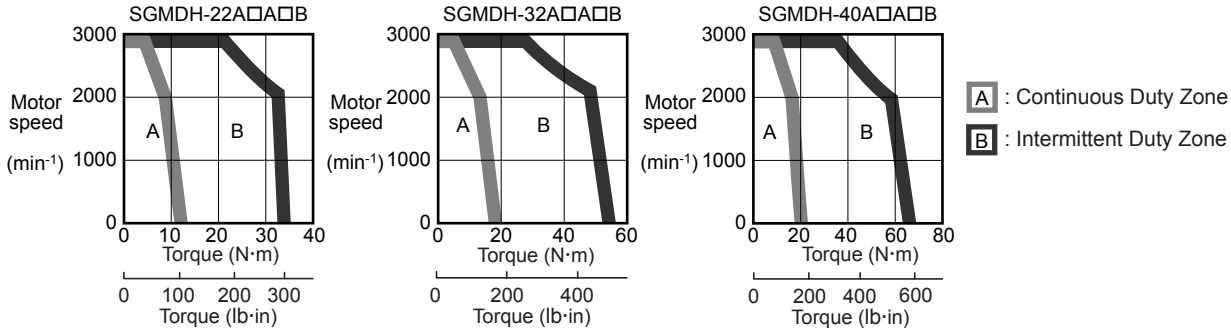

(3) Holding Brake Electrical Specifications

Holding Brake Rated Voltage	Servomotor Model	Servomotor Capacity W	Holding Brake Specifications			
			Capacity W	Holding Torque N·m (lb·in)	Coil Resistance Ω (at 20 °C (68 °F))	Rated Current A (at 20 °C (68 °F))
90VDC	SGMDH-22	2200	16.0	29.4 (260)	505	0.18
	SGMDH-32	3200	16.0	29.4 (260)	505	0.18
	SGMDH-40	4000	16.0	29.4 (260)	505	0.18
24VDC	SGMDH-22	2200	16.0	29.4 (260)	36.0	0.67
	SGMDH-32	3200	16.0	29.4 (260)	36.0	0.67
	SGMDH-40	4000	16.0	29.4 (260)	36.0	0.67

Note: The holding brake is only used to hold the load and cannot be used to stop the servomotor.

3.7 Ratings and Specifications of SGMUH (6000min^{-1})

3.7.1 SGMUH Servomotors (6000min^{-1}) Without Holding Brakes

(1) Ratings and Specifications

- Time Rating: Continuous
- Vibration Class: 15 µm or below
- Insulation Resistance: 500 VDC, 10 MΩ min.
- Ambient Temperature: 0 to 40°C (32 to 104°F)
- Excitation: Permanent magnet
- Mounting: Flange method
- Thermal Class: F
- Withstand Voltage: 1800 VAC for one minute
- Enclosure: Totally enclosed, IP67 self-cooled (except for the shaft opening)
- Ambient Humidity: 20% to 80% (no condensation)
- Drive Method: Direct drive

Voltage		400 V			
Servomotor Model SGMUH-		10D□A	15D□A	30D□A	40D□A
Rated Output *1	kW	1.0	1.5	3.0	4.0
Rated Torque *1	N·m	1.59	2.45	4.9	6.3
	lb·in *2	14.1	21.7	43.5	55.8
Instantaneous Peak Torque *1	N·m	6.5	11	21.5	29
	lb·in *2	57.6	97.5	190	257
Rated Current *1	A (rms)	2.7	4.1	8.1	9.6
Instantaneous Max. Current *1	A (rms)	8.5	14	28	38.5
Rated Speed *1	min^{-1}	6000			
Max. Speed *1	min^{-1}	6000			
Torque Constant	N·m/A (rms)	0.81	0.83	0.81	0.80
	lb·in/A (rms) *2	7.2	7.4	7.2	7.1
Rotor Moment of Inertia J *3	$\times10^{-4}$ kg·m^2	1.74	2.47	7.0	9.6
		(2.07)	(2.80)	(9.1)	(11.7)
	x10^{-3} lb·in·s^2 *2	1.54	2.19	6.2	8.5
		(1.83)	(2.48)	(8.06)	(10.4)
Rated Power Rate *1	kW/s	14.5	24.3	34.3	41.3
Rated Angular Acceleration *1	rad/s^2	9130	9910	7000	6550

* 1. These items and torque-motor speed characteristics quoted in combination with SGDH SERVOPACK are at an armature winding temperature of 20°C (68°F).
* 2. These values are reference values.
* 3. The values in the parentheses are those for motors with holding brakes.

Note: These characteristics are values with the following aluminum plates (heat sinks) attached for cooling.
SGMUH-10 and 15: 300 × 300 × 12 (mm) [11.81 × 11.81 × 0.47 (in)]
SGMUH-30 and 40: 400 × 400 × 20 (mm) [15.75 × 15.75 × 0.79 (in)]

(2) Holding Brake Moment of Inertia

The moment of inertia of the servomotor with holding brake is expressed using the following equation.

(The moment of inertia of the servomotor with holding brake) = (rotor moment of inertia) + (brake moment of inertia)

Servomotor SGMUH-		10D□A	15D□A	30D□A	40D□A
Brake Moment of Inertia	kg·m^2 ×10^{-4}	0.25		2.10	
	lb·in·s^{2}x10^{-3} *	0.221		1.86	

* These values are reference values.

(3) Torque-motor Speed Characteristics

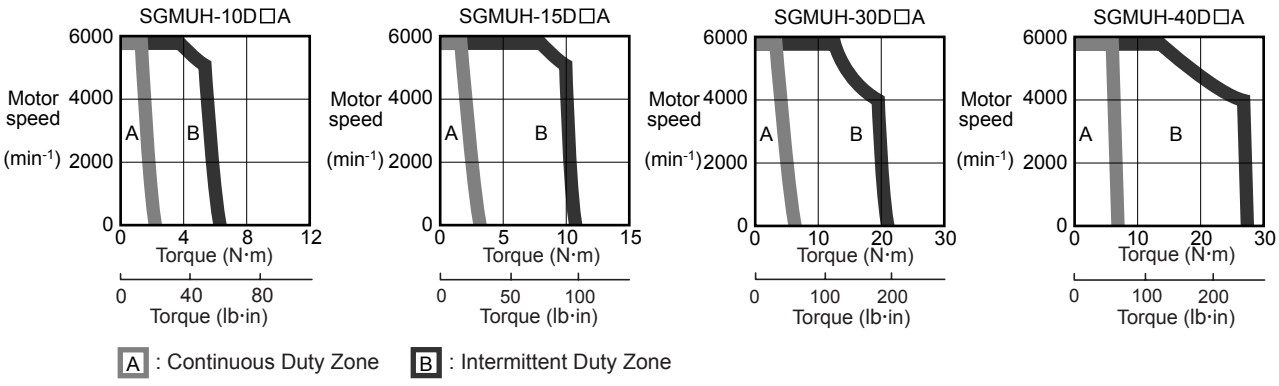

(4) Holding Brake Electrical Specifications

Holding Brake Rated Voltage	Servomotor Model	Servomotor Capacity W	Holding Brake Specifications			
			Capacity W	Holding Torque N·m (lb·in)	Coil Resistance Ω (at 20 °C (68 °F))	Rated Current A (at 20 °C (68 °F))
24 VDC	SGMSH-10	1000	7.0	4.3 (38.1)	82	0.29
	SGMSH-15	1500	7.0	4.3 (38.1)	82	0.29
	SGMSH-30	3000	9.85	10.0 (88.5)	59	0.41
	SGMSH-40	4000	9.85	10.0 (88.5)	59	0.41

3.8 Mechanical Specifications of Servomotors

3.8.1 Precautions on Servomotor Installation

Servomotors can be installed either horizontally or vertically.

The service life of the servomotor will be shortened or unexpected problems will occur if the servomotor is installed incorrectly or in an inappropriate location. Always observe the following installation instructions.

⚠ CAUTION

- Do not connect the servomotor directly to a commercial power line. This will damage the servomotor.
  The servomotor cannot operate without the proper SERVOPACK.

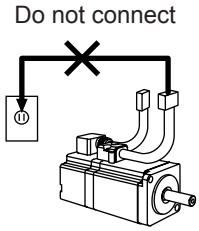

Storage Temperature and Humidity	Store the servomotor within the following temperature range if it is stored with the power cable disconnected. Ambient temperature during storage: -20 to 60°C (-4 to 140°F) Ambient humidity during storage: 80%RH or less (with no condensation)
Installation Site	Servomotors are designed for indoor use. Install the servomotor in environments that satisfy the following conditions. • Free of corrosive or explosive gases. • Well-ventilated and free of dust and moisture. • Ambient temperature of 0 to 40°C (32 to 104° F) • Relative humidity of 20 to 80% with no condensation. • Facilitates inspection and cleaning
Alignment	Alignment Accuracy Measure this distance at four different positions on the circumference. The difference between the maximum and minimum measurements must be 0.03 mm (0.0012 in) or less. (Turn together with coupling.) 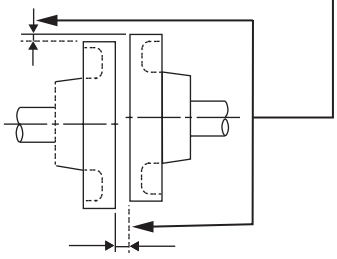 Align the shaft of the servomotor with the shaft of the equipment, and then couple the shafts. Install the servomotor so that alignment accuracy falls within the range described on the left. Vibration may occur and damage the bearings and encoders if the shafts are not correctly aligned.
Orientation	Servomotors can be installed either horizontally or vertically.

Handling Oil and Water	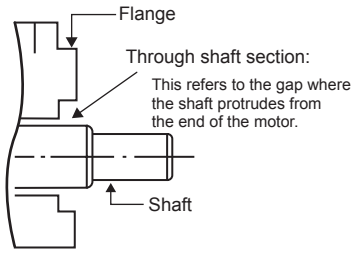	If the servomotor is used in a location that is subject to water drops, make sure of the servomotor protective specifications (except for through shaft section). If the servomotor is used in a location that is subject to water or oil mist, use a servomotor with an oil seal to seal the through shaft section. Precautions on Using Servomotor With Oil Seal • The oil surface must be under the oil seal lip. • Use an oil seal in favorably lubricated condition. • When using a servomotor with its shaft pointed upward, be sure that oil will not stay in the oil seal lips.
Cable Stress	Make sure there are no bends or tension on the power lines. Especially be careful to wire signal line cables so that they are not subject to stress because the core wires are very thin at only 0.2 to 0.3 mm (0.0079 to 0.012 in).	
Connectors	Observe the following precautions: • Make sure there is no foreign matters such as dust and metal chips in the connector before connecting. • When the connectors are connected to the motor, be sure to connect the end of servomotor main circuit cables before connecting the encoder cable's end. If the encoder cable's end is connected first, the encoder may be damaged because of the voltage differences between FGs. • Make sure of the pin arrangement. • Do not apply shock to resin connectors. Otherwise, they may be damaged. • When handling a servomotor with its cables connected, hold the servomotor or the connectors. Otherwise, the cables will be damaged. • When bending cables are used, wiring must be performed so that excessive stress will not be applied to the connector section. Failure to observe this caution may damage the connector.	

IMPORTANT

1. Before starting installation, thoroughly remove the anticorrosive paint that coats the end of the motor shaft.

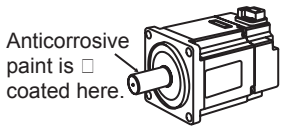

2. Vibration from improper alignment of shafts will damage the bearings.
3. Do not allow direct impact to be applied to the shafts when installing the coupling as the encoder mounted on the opposite end of the shaft may be damaged.

3.8.2 Mechanical Tolerance

The following table shows tolerances for the servomotor's output shaft and installation area. For more details on tolerances, refer to the dimensional drawing of the individual servomotor.

	Tolerance T. I. R. (Total Indicator Reading)	Reference Diagram
A	Perpendicularity between the flange face and output shaft: 0.04	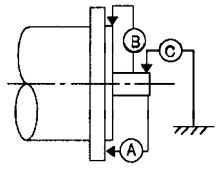
B	Mating concentricity of the flange O.D.: 0.04	
C	Run-out at the end of the shaft: 0.02	

3.8.3 Direction of Servomotor Rotation

Positive rotation of the servomotor is counterclockwise when viewed from the load. (Same as for servomotors with gears.)

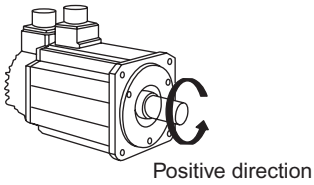

3.8.4 Impact Resistance

Mount the servomotor with the axis horizontal. The servomotor will withstand the following vertical impacts:

- Impact acceleration: 490 m/s^2
- Impact occurrences: 2

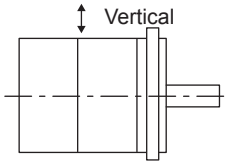

3.8.5 Vibration Resistance

Mount the servomotor with the axis horizontal. The servomotor will withstand the following vibration acceleration in three directions: Vertical, side to side, and front to back.

Servomotor Model	Vibration Acceleration at Flange
SGMAH, SGMPH	49 m/s^2
SGMSH, SGMGH, SGMDH, SGMUH	24.5 m/s^2

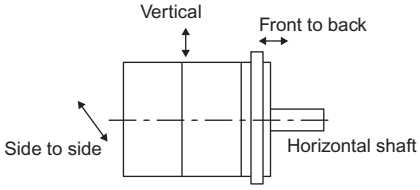

Impact applied to the servomotor

3.8.6 Vibration Class

The vibration class [1]for the servomotors at rated motor speed is 15 μm or below.

TERMS

[1] Vibration Class

A vibration class of 15 μm or below indicates a total vibration amplitude of 15 μm maximum on the servomotor during rated rotation.

3.9 Terms and Data for Servomotors With Gears

(1) Terms for Servomotors With Standard Backlash Gears and Low-backlash Gears

Terminology for Servomotors with Gears

Item	Measurement Method/Definition	Typical Value	
		Standard Backlash Gears	Low-back-lash Gears
Rated Input Motor Speed (min^{-1})	–	3000	3000
Max. Allowable Input Motor Speed (min^{-1})	–	4000	4000
Rated Torque (N·m)	The rated output torque of the motor is the gear input torque. The rated torque is this value multiplied by the inverse of the gear ratio and efficiency.	–	–
Lost Motion (arc-min)*	Angular difference in the screw with a ±5% rated torque load. (Maximum value at any four positions during output.)	20 max.	3 max.
Torsion Rigidity (arc-min)*	Highest torsion angle value on one side with a ± rated torque load	27 max.	10 max.
Angular Transmis-sion Error Accuracy (arc-min)	Difference in absolute accuracy for one rotation under load and no-load conditions during output.	15 max.	6 max.

* See the following graph for lost motion and torsion rigidity.

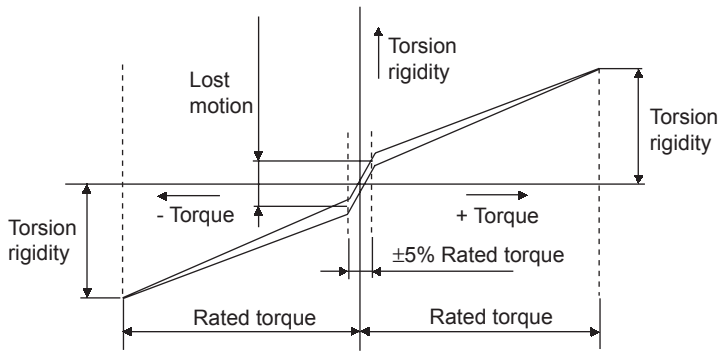

(2) Noise Data

The following noise data for a servomotor with a gear is for reference only and may slightly vary with the capacity and gear ratio of the servomotor.

Measurement Conditions:
- Scale A: 50 cm (19.7 in)
- Ground Noise: 28 dB

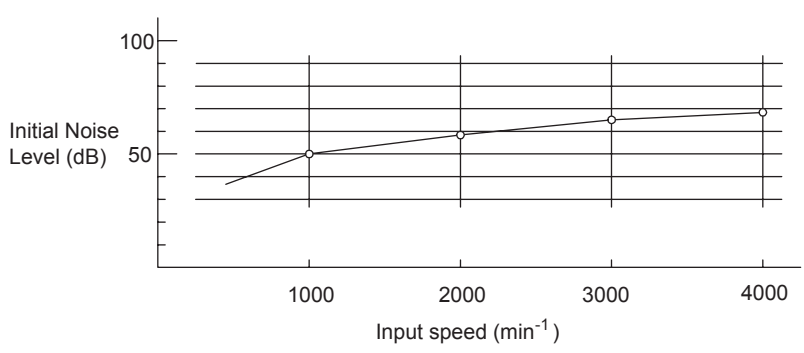

(3) Efficiency

The output torque and motor speed produce the following trends in efficiency. The values in the tables, Ratings and Specifications of SGM□H Servomotors with Gears, are at the rated motor torque and rated motor speed (3000 min^{-1}).

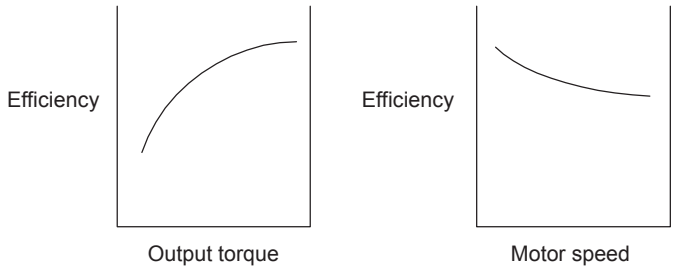

3.10 Servomotor Dimensional Drawings

Dimensional drawings for the SGM□H servomotors are broadly grouped using the following categories: With or without gears or brakes.

Series	Motor Capacity	Groups of Servomotor Dimensional Drawings	Reference
SGMAH (3000 min^{-1})	100 VAC: 0.03 / 0.05 / 0.1 / 0.2 kW 200 VAC: 0.03 / 0.05 / 0.1 / 0.2 / 0.4 / 0.75 kW 400 VAC: 0.3 / 0.65 kW	Without gears and brakes	3.11.1
		With brakes	3.11.2
		With standard backlash gears	3.11.3
		With standard backlash gears and brakes	3.11.4
		With low-backlash gears	3.11.5
SGMPH (3000 min^{-1})	100 VAC 0.1 / 0.2kW 200 VAC 0.1 / 0.2 / 0.4 / 0.75 / 1.5 kW 400 VAC: 0.2 / 0.4 / 0.75 / 1.5 kW	Without gears and brakes	3.12.1
		With brakes	3.12.2
		With standard backlash gears	3.12.3
		With standard backlash gears and brakes	3.12.4
		With low-backlash gears	3.12.5
SGMGH (1500 min^{-1})	200 VAC: 0.45 / 0.85 / 1.3 / 1.8 / 2.9 / 4.4 / 5.5 / 7.5 / 11.0 / 15.0 kW 400 VAC: 0.45 / 0.85 / 1.3 / 1.8 / 2.9 / 4.4 / 5.5 / 7.5 / 11.0 / 15.0 kW	Without gears and brakes	3.14.1
		200-V specifications with brakes	3.14.2
		400-V specifications with brakes	3.14.3
		Foot-mounted type with standard backlash gears	3.14.4
		Flange-type with standard backlash gears	3.14.5
		Flange-type with low-backlash gears	3.14.6
SGMGH (1000 min^{-1})	200 VAC: 0.3 / 0.6 / 0.9 / 1.2 / 2.0 / 3.0 / 4.0 / 5.5 kW	Without gears and brakes	3.15.1
		With brakes	3.15.2
		Foot-mounted type with standard backlash gears	3.15.3
		Flange-type with standard backlash gears	3.15.4
		Flange-type with low-backlash gears	3.15.5
SGMSH (3000 min^{-1})	200 VAC: 1.0 / 1.5 / 2.0 / 3.0 / 4.0 / 5.0 kW 400 VAC: 1.0 / 1.5 / 2.0 / 3.0 / 4.0 / 5.0 kW	Without gears and brakes	3.16.1
		200-V specifications with brakes	3.16.2
		400-V specifications with brakes	3.16.3
		Flange-type with low-backlash gears	3.16.4
SGMDH (2000 min^{-1})	200 VAC: 2.2 / 3.2 / 4.0 kW	Without gears and brakes	3.17.1
		With brakes	3.17.1
SGMUH (6000 min^{-1})	400 VAC: 1.0 / 1.5 / 3.0 / 4.0 kW	Without gears and brakes	3.18.1
		With brakes	3.18.2

Note: Servomotors SGMDH (2000min^{-1}) and SGMUH (6000 min^{-1}) do not have any models provided with gears.

3.11 Dimensional Drawings of SGMAH Servomotors (3000 min^{-1})

3.11.1 SGMAH Servomotors (3000 min^{-1}) Without Gears

(1) 30 W, 50 W, 100 W

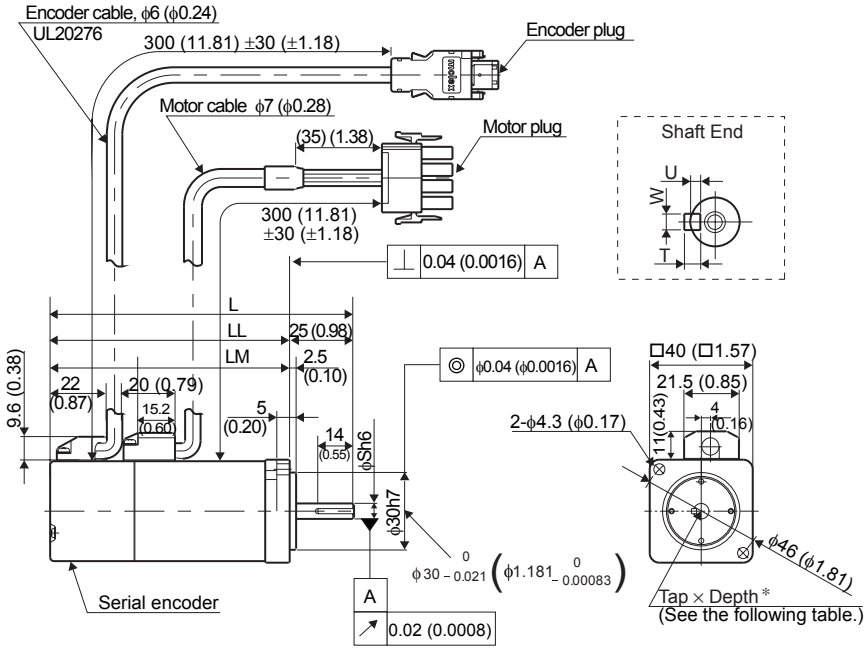

Units: mm (in)

Model SGMAH-	L	LL	LM	Tap × Depth*	U	W	T	Approx. Mass kg (lb)	Allowable Radial Load N (lbf)	Allowable Thrust Load N (lbf)
A3□□A21	94.5 (3.72)	69.5 (2.74)	36.5 (1.44)	No tap	No key			0.3 (0.66)	68 (15)	54 (12)
A3□□A41					1.2 (0.047)	2 (0.079)	2 (0.079)			
A3□□A61				M2.5 × 5L						
A5□□A21	102.0 (4.02)	77.0 (3.03)	44.0 (1.73)	No tap	No key			0.4 (0.88)		
A5□□A41					1.2 (0.047)	2 (0.079)	2 (0.079)			
A5□□A61				M2.5 × 5L						
01□□A21	119.5 (4.70)	94.5 (3.72)	61.5 (2.42)	No tap	No key			0.5 (1.1)	78 (18)	
01□□A41					1.8 (0.071)	3 (0.12)	3 (0.12)			
01□□A61				M3 × 6L						

INFO

1. The dimensions for L and LL of a servomotor incorporating an encoder with super-capacitor (model: SGMAH-□□□4) are as shown below.
   SGMAH-A3, A5, and 01: L-dimension +12 mm (0.47 in), LL-dimension +12 mm (0.47 in)
2. The working point of the SGMAH servomotor radial load is at the position of minus 5 mm from the shaft end.

- Dimensional Tolerances

Units: mm (in)

Model SGMAH-	Shaft-end Dimensions
	S
A3□□A21	$6^{0}_{-0.008}\left(0.236^{0}_{-0.0003}\right)$
A3□□A41	
A3□□A61	
A5□□A21	$6^{0}_{-0.008}\left(0.236^{0}_{-0.0003}\right)$
A5□□A41	
A5□□A61	
01□□A21	$8^{0}_{-0.009}\left(0.315^{0}_{-0.0004}\right)$
01□□A41	
01□□A61	

(2) 200 W, 400 W, 750 W

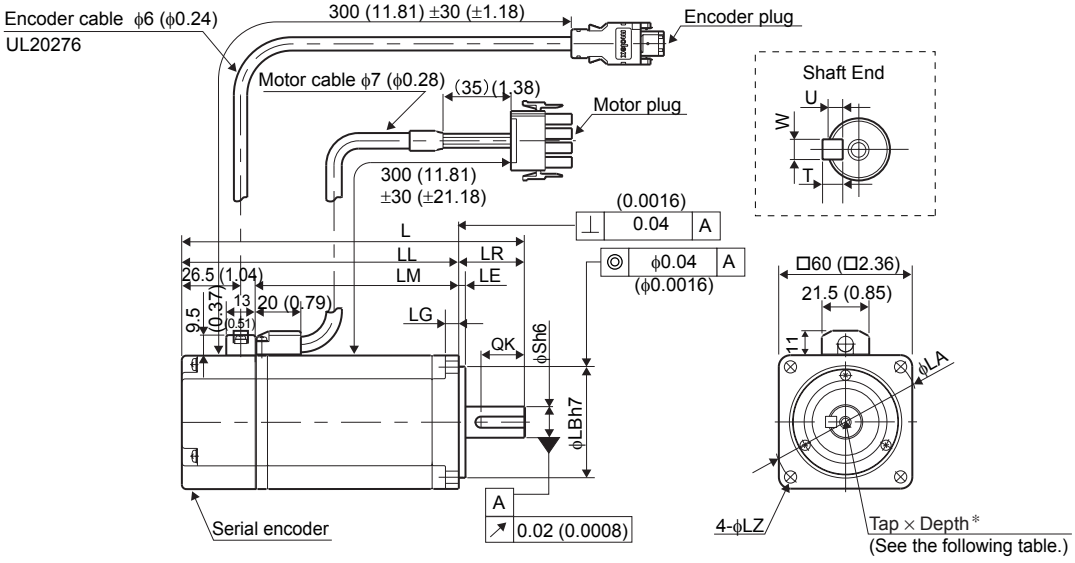

Units: mm (in)

Model SGMAH-	L	LL	LM	LR	LE	LG	LA	LC	LZ
02□□A21	126.5 (4.98)	96.5 (3.80)	63 (2.48)	30 (1.18)	3 (0.12)	6 (0.24)	70 (2.76)	60	5.5 (0.22)
02□□A41									
02□□A61									
04A□A21	154.5 (6.08)	124.5 (4.90)	91 (3.58)	30 (1.18)	3 (0.12)	6 (0.24)	70 (2.76)		5.5 (0.22)
04A□A41									
04A□A61									
08A□A21	185 (7.28)	145 (5.71)	111.5 (4.39)	40 (1.57)	3 (0.12)	8 (0.31)	90 (3.54)	80	7 (0.28)
08A□A41									
08A□A61									

Units: mm (in)

Model SGMAH-	Tap× Depth*	QK	U	W	T	Approx. Mass kg (lb)	Allowable Radial Load N (lbf)	Allowable Thrust Load N (lbf)
02□□A21	No tap	No key				1.1 (2.4)	245 (55)	74 (17)
02□□A41		20 (0.79)	3 (0.12)	5 (0.20)	5 (0.20)			
02□□A61	M5×8L							
04A□A21	No tap	No key				1.7 (3.7)		
04A□A41		20 (0.79)	20 (0.79)	5 (0.20)	5 (0.20)			
04A□A61	M5×8L							
08A□A21	No tap	No key				3.4 (7.50)	392 (88)	147 (33)
08A□A41		30 (1.18)	3 (0.12)	5 (0.20)	5 (0.20)			
08A□A61	M5×8L							

INFO

1. The dimensions for L and LL of a servomotor incorporating an encoder with super-capacitor (model: SGMAH-□□□4) are as shown below.
   SGMAH-02 and 04: L-dimension + 8.2 mm (0.32 in), LL-dimension +8.2 mm (0.32 in).
   SGMAH-08: L-dimension + 0 mm, LL-dimension +0 mm.
2. The working point of the SGMAH servomotor radial load is at the position of minus 5 mm from the shaft end.

3

- Dimensional Tolerances

Units: mm (in)

Model SGMAH-	Shaft-end Dimensions S	Flange Face Dimensions LB
02□□A21	$14^{0}_{-0.011}\left(0.5512^{0}_{-0.00043}\right)$	$50^{0}_{-0.025}\left(1.9685^{0}_{-0.00098}\right)$
02□□A41		
02□□A61		
04A□A21	$14^{0}_{-0.011}\left(0.5512^{0}_{-0.00043}\right)$	$50^{0}_{-0.025}\left(1.9685^{0}_{-0.00098}\right)$
04A□A41		
04A□A61		
08A□A21	$16^{0}_{-0.011}\left(0.6299^{0}_{-0.00043}\right)$	$70^{0}_{-0.030}\left(2.756^{0}_{-0.00012}\right)$
08A□A41		
08A□A61		

(3) 300 W, 650 W

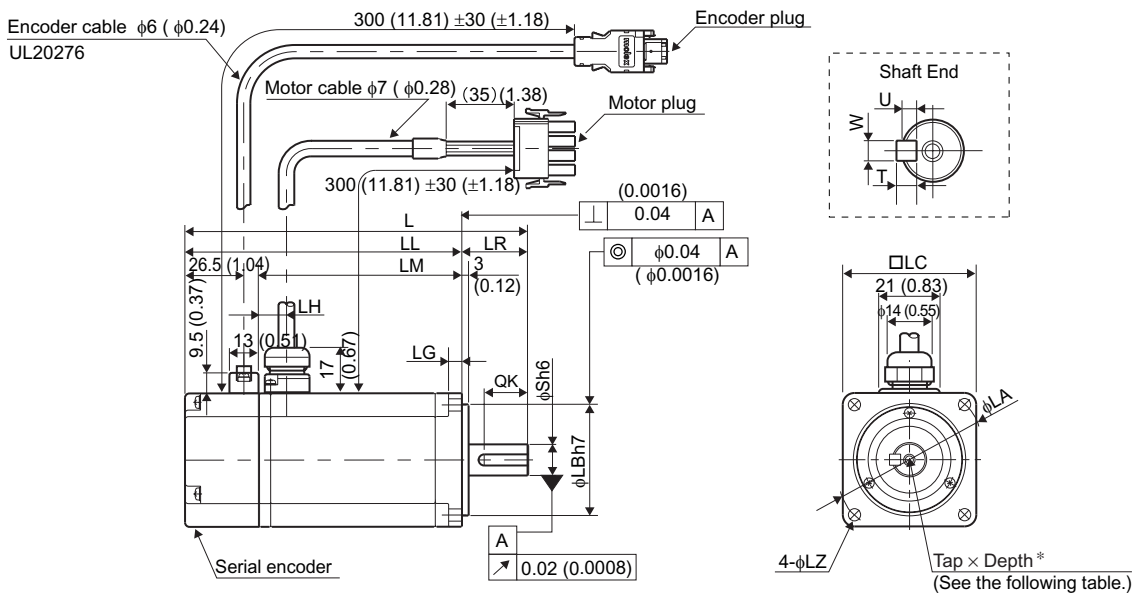

Units: mm (in)

Model SGMAH-	L	LL	LM	LR	LG	LC	LA	LZ	LH
03D□A21	154.5 (6.08)	124.5 (4.90)	91 (3.58)	30 (1.18)	6 (0.24)	60 (2.36)	70 (2.76)	5.5 (0.22)	7 (0.28)
03D□A41									
03D□A61									
07D□A21	185 (7.28)	145 (5.71)	111.5 (4.39)	40 (1.57)	8 (0.31)	80 (3.15)	90 (3.54)	7 (0.28)	8 (0.31)
07D□A41									
07D□A61									

Units: mm (in)

Model SGMAH-	Tap× Depth*	QK	U	W	T	Approx. Mass kg (lb)	Allowable Radial Load N (lbf)	Allowable Thrust Load N (lbf)
03D□A21	No tap	No key				1.7 (3.75)	245 (55)	74 (17)
03D□A41		20 (0.79)	3 (0.12)	5 (0.20)	5 (0.20)			
03D□A61	M5×8L							
07D□A21	No tap	No key				3.4 (7.50)	392 (88)	147 (33)
07D□A41		30 (1.18)	3 (0.12)	5 (0.20)	5 (0.20)			
07D□A61	M5×8L							

1. The dimensions for L and LL of a servomotor incorporating an encoder with super-capacitor (model: SGMAH-□□□4) are as shown below.
   SGMAH-03: L-dimension + 8.2 mm (0.32 in), LL-dimension +8.2 mm (0.32 in).
   SGMAH-07: L-dimension + 0 mm, LL-dimension +0 mm.
2. The working point of the SGMAH servomotor radial load is at the position of minus 5 mm from the shaft end.

- Dimensional Tolerances

Units: mm (in)

Model SGMAH-	Shaft-end Dimensions	Flange Face Dimensions
	S	LB
03D□A21	$14^{0}_{-0.011}\left(0.5512^{0}_{-0.00043}\right)$	$50^{0}_{-0.025}\left(1.9685^{0}_{-0.00098}\right)$
03D□A41		
03D□A61		
07D□A21	$16^{0}_{-0.011}\left(0.6299^{0}_{-0.00043}\right)$	$70^{0}_{-0.030}\left(2.756^{0}_{-0.00012}\right)$
07D□A41		
07D□A61		

3.11.2 SGMAH Servomotors (3000 min^{-1}) With Brakes

(1) 30 W, 50 W, 100 W

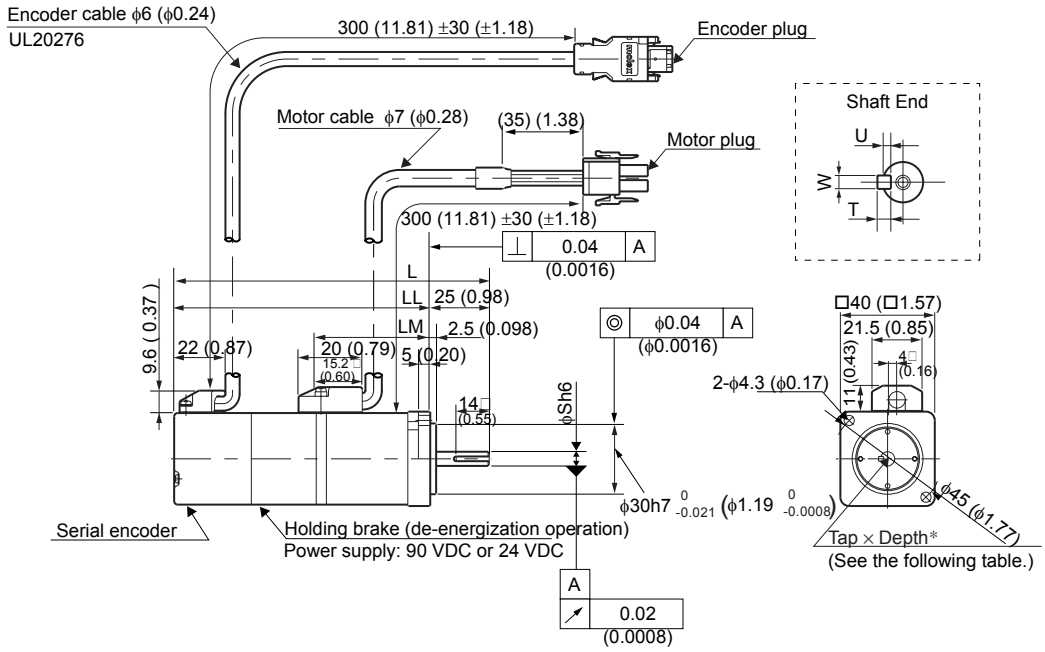

Units: mm (in)

Model SGMAH-	L	LL	LM	Tap×Depth *	U	W	T	Approx. Mass kg (lb)	Allowable Radial Load N (lbf)	Allowable Thrust Load N (lbf)
A3□□A2□	126.0 (4.96)	101.0 (3.98)	36.5 (1.44)	No tap	No key			0.6 (1.32)	68 (15)	54 (12)
A3□□A4□					1.2 (0.047)	2 (0.079)	2 (0.079)			
A3□□A6□				M2.5×5L						
A5□□A2□	133.5 (5.26)	108.5 (4.27)	44.0 (1.73)	No tap	No key			0.7 (1.54)		
A5□□A4□					1.2 (0.047)	2 (0.079)	2 (0.079)			
A5□□A6□				M2.5×5L						
01□□A2□	160.0 (6.30)	135.0 (5.31)	61.5 (2.42)	No tap	No key			0.8 (1.76)	78 (18)	
01□□A4□					1.8 (0.071)	3 (0.12)	3 (0.12)			
01□□A6□				M3×6L						

INFO

1. The dimensions for L and LL of a servomotor incorporating an encoder with super-capacitor (model: SGMAH-□□□4) are as shown below.
   SGMAH-A3, A5, and 01: L-dimension +12 mm (0.47 in), LL-dimension +12 mm (0.17 in).
2. The working point of the SGMAH servomotor radial load is at the position of minus 5 mm from the shaft end.

- Dimensional Tolerances

Units: mm (in)

Model SGMAH-	Shaft-end Dimensions mm (in)
	S
A3□□A2□	$6^{0}_{-0.008}\left(0.236^{0}_{-0.0003}\right)$
A3□□A4□	
A3□□A6□	
A5□□A2□	$6^{0}_{-0.008}\left(0.235^{0}_{-0.0003}\right)$
A5□□A4□	
A5□□A6□	
01□□A2□	$8^{0}_{-0.009}\left(0.315^{0}_{-0.0004}\right)$
01□□A4□	
01□□A6□	

(2) 200 W, 400 W, 750 W

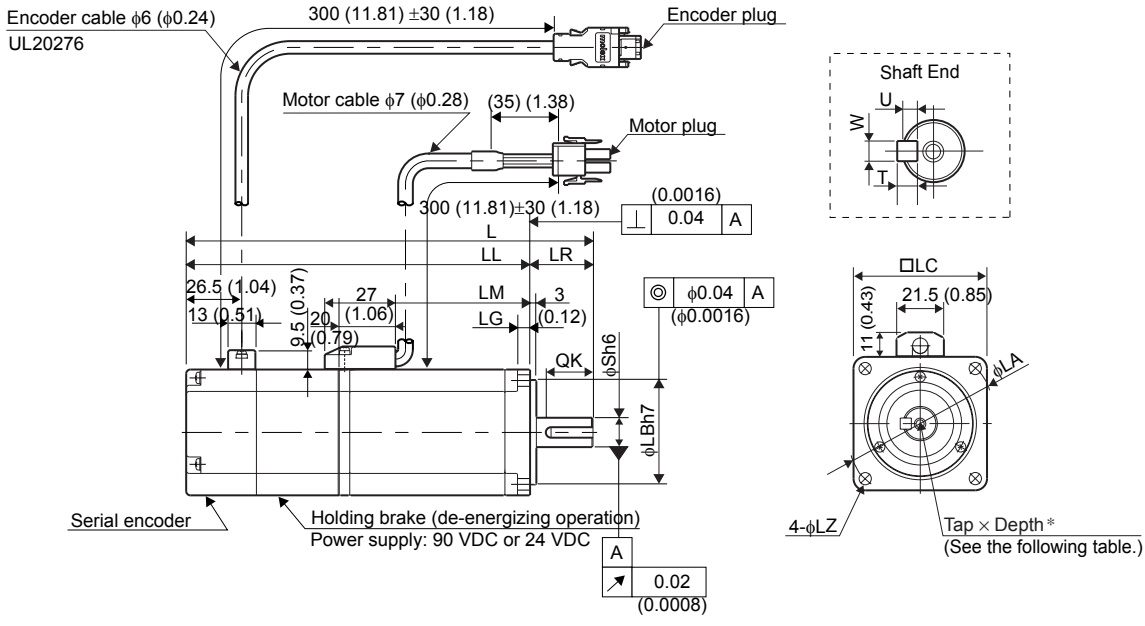

Units: mm (in)

Model SGMAH-	L	LL	LM	LR	LG	LC	LA	LZ
02□□A2□	166 (6.54)	136 (5.35)	62.5 (2.46)	30 (1.18)	6 (0.24)	60 (2.36)	70 (2.76)	5.5 (0.22)
02□□A4□								
02□□A6□								
04A□A2□	194 (7.64)	164 (6.46)	90.5 (3.56)	30 (1.18)	6 (0.24)	60 (2.36)	70 (2.76)	5.5 (0.22)
04A□A4□								
04A□A6□								
08A□A2□	229.5 (9.04)	189.5 (7.46)	111 (4.37)	40 (1.57)	8 (0.31)	80 (3.15)	90 (3.54)	7 (0.28)
08A□A4□								
08A□A6□								

Units: mm (in)

Model SGMAH-	Tap× Depth*	QK	U	W	T	Approx. Mass kg (lb)	Allowable Radial Load N (lbf)	Allowable Thrust Load N (lbf)
02□□A2□	No tap	No key				1.6 (3.53)	245 (55)	74 (17)
02□□A4□		20 (0.79)	3 (0.12)	5 (0.20)	5 (0.20)			
02□□A6□	M5×8L							
04A□A2□	No tap	No key				2.2 (4.85)		
04A□A4□		20 (0.79)	3 (0.12)	5 (0.20)	5 (0.20)			
04A□A6□	M5×8L							
08A□A2□	No tap	No key				4.3 (9.48)	392 (88)	147 (33)
08A□A4□		30 (1.18)	3 (0.12)	5 (0.20)	5 (0.20)			
08A□A6□	M5×8L							

INFO

1. The dimensions for L and LL of a servomotor incorporating an encoder with super-capacitor (model: SGMAH-□□□4) are as shown below.
   SGMAH-02 and 04: L-dimension +8.2 mm (0.32 in), LL-dimension +8.2 mm (0.32 in)
   SGMAH-08: L-dimension + 0 mm, LL-dimension +0 mm
2. The working point of the SGMAH servomotor radial load is at the position of minus 5 mm from the shaft end.

- Dimensional Tolerances

Units: mm (in)

Model SGMAH-	Shaft-end Dimensions	Flange Face Dimensions
	S	LB
02□□A2□	$14^{0}_{-0.011}\left(0.5512^{0}_{-0.00043}\right)$	$50^{0}_{-0.025}\left(1.9685^{0}_{-0.00098}\right)$
02□□A4□		
02□□A6□		
04A□A2□	$14^{0}_{-0.011}\left(0.5512^{0}_{-0.00043}\right)$	$50^{0}_{-0.025}\left(1.9685^{0}_{-0.00098}\right)$
04A□A4□		
04A□A6□		
08A□A2□	$16^{0}_{-0.001}\left(0.6299^{0}_{-0.00043}\right)$	$70^{0}_{-0.030}\left(2.756^{0}_{-0.00012}\right)$
08A□A4□		
08A□A6□		

(3) 300 W, 650 W

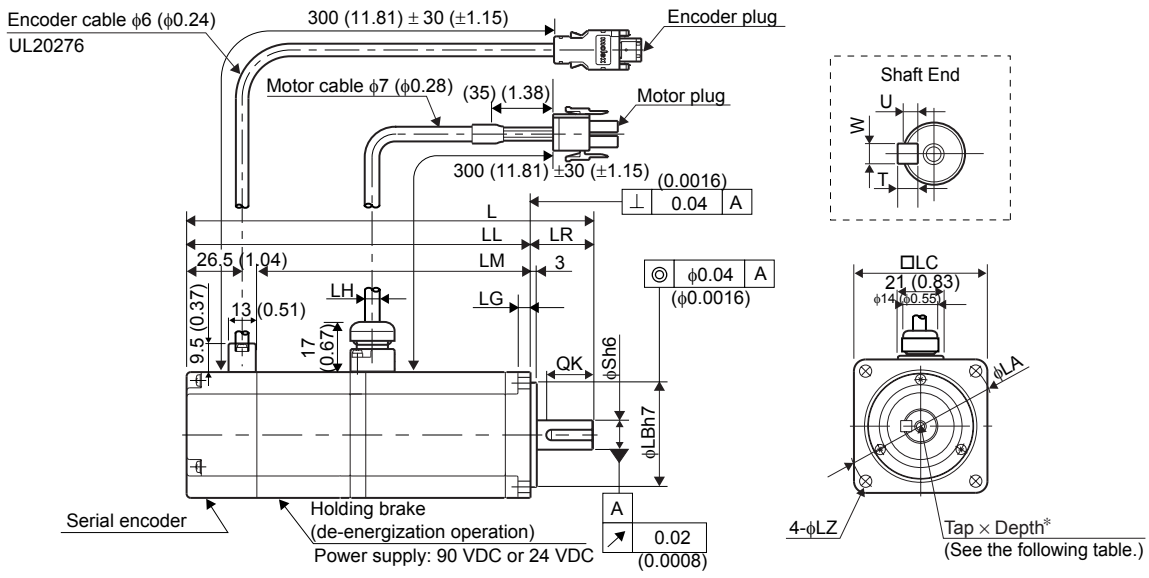

Units: mm (in)

Units: mm (in)

Model SGMAH-	L	LL	LM	LR	LG	LC	LA	LZ	LH
03D□A2□	194 (7.64)	164 (6.46)	90.5 (3.56)	30 (1.18)	6 (0.24)	60 (2.36)	70 (2.76)	5.5 (0.22)	7 (0.28)
03D□A4□									
03D□A6□									
07D□A2□	229.5 (9.04)	189.5 (7.46)	111 (4.37)	40 (1.57)	8 (0.31)	80 (3.15)	90 (3.54)	7 (0.28)	8 (0.31
07D□A4□									
07D□A6□									

Units: mm (in)

Model SGMAH-	Tap×Depth*	QK	U	W	T	Approx. Mass kg (lb)	Allowable Radial Load N (lbf)	Allowable Thrust Load N (lbf)
03D□A2□	No tap	No key				2.2 (4.85)	245 (55)	74 (17)
03D□A4□		20 (0.79)	3 (0.12)	5 (0.20)	5 (0.20)			
03D□A6□	M5×8L							
07D□A2□	No tap	No key				4.3 (9.48)	392 (88)	147 (33)
07D□A4□		30 (1.18)	3 (0.12)	5 (0.20)	5 (0.20)			
07D□A6□	M5×8L							

INFO

1. The dimensions for L and LL of a servomotor incorporating an encoder with super-capacitor (model: SGMAH-□□□4) are as shown below.
   SGMAH-03: L-dimension + 8.2 mm (0.32 in), LL-dimension +8.2 mm (0.32 in)
   SGMAH-07: L-dimension + 0 mm, LL-dimension +0 mm
2. The working point of the SGMAH servomotor radial load is at the position of minus 5 mm from the shaft end.

- Dimensional Tolerances

Units: mm (in)

Model SGMAH-	Shaft-end Dimensions	Flange Face Dimensions
	S	LB
03D□A2□	$14^{0}_{-0.011}\left(0.5512^{0}_{-0.00043}\right)$	$50^{0}_{-0.025}\left(1.9685^{0}_{-0.00098}\right)$
03D□A4□		
03D□A6□		
07D□A2□	$16^{0}_{-0.011}\left(0.6299^{0}_{-0.00043}\right)$	$70^{0}_{-0.030}\left(2.756^{0}_{-0.00012}\right)$
07D□A4□		
07D□A6□		

3.11.3 SGMAH Servomotors (3000 min^{-1}) With Standard Backlash Gears

(1) 30 W, 50 W, 100 W

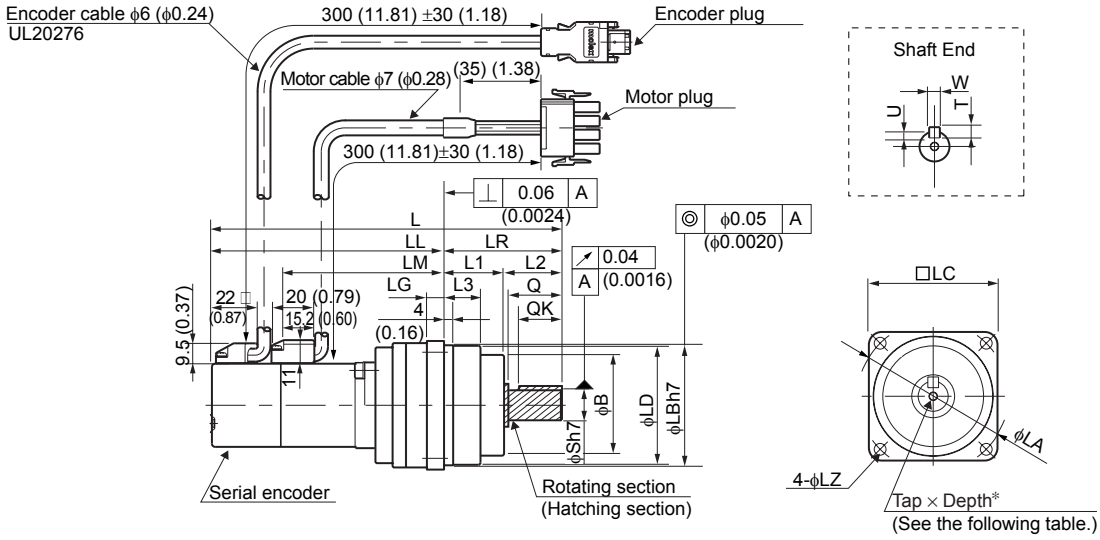

Units: mm (in)

Model SGMAH-	Gear Ratio	L	LL	LM	LR	LG	B	LD	LB	L1	L2	L3	Q	QK	S
A3□□AJ1□1	1/5	156.5 (6.16)	101.5 (4.00)	68.5 (2.70)	55 (2.17)	8 (0.31)	47 (1.85)	55.5 (2.19)	56 (2.20)	28 (1.10)	27 (1.06)	17 (0.67)	25 (0.98)	20 (0.79)	14 (0.55)
A3□□AJ3□1	3/31	156.5 (6.16)	101.5 (4.00)	68.5 (2.70)	55 (2.17)	8 (0.31)	47 (1.85)	55.5 (2.19)	56 (2.20)	28 (1.10)	27 (1.06)	17 (0.67)	25 (0.98)	20 (0.79)	14 (0.55)
A3□□AJC□1	1/21	171.5 (6.75)	116.5 (4.59)	83.5 (3.29)	55 (2.17)	8 (0.31)	47 (1.85)	55.5 (2.19)	56 (2.20)	28 (1.10)	27 (1.06)	17 (0.67)	25 (0.98)	20 (0.79)	14 (0.55)
A3□□AJ7□1	1/33	171.5 (6.75)	116.5 (4.59)	83.5 (3.29)	55 (2.17)	8 (0.31)	47 (1.85)	55.5 (2.19)	56 (2.20)	28 (1.10)	27 (1.06)	17 (0.67)	25 (0.98)	20 (0.79)	14 (0.55)
A5□□AJ1□1	1/5	164 (6.46)	109 (4.29)	76.0 (2.99)	55 (2.17)	8 (0.31)	47 (1.85)	55.5 (2.19)	56 (2.20)	28 (1.10)	27 (1.06)	17 (0.67)	25 (0.98)	20 (0.79)	14 (0.55)
A5□□AJ3□1	3/31	174 (6.85)	114 (4.49)	77.0 (3.03)	60 (2.36)	9 (0.35)	57 (2.24)	63 (2.48)	65 (2.56)	30 (1.18)	30 (1.18)	14.5 (0.57)	28 (1.10)	25 (0.98)	16 (0.63)
A5□□AJC□1	1/21	191 (7.52)	131 (5.16)	94.0 (3.70)	60 (2.36)	9 (0.35)	57 (2.24)	63 (2.48)	65 (2.56)	30 (1.18)	30 (1.18)	14.5 (0.57)	28 (1.10)	25 (0.98)	16 (0.63)
A5□□AJ7□1	1/33	191 (7.52)	131 (5.16)	94.0 (3.70)	60 (2.36)	9 (0.35)	57 (2.24)	63 (2.48)	65 (2.56)	30 (1.18)	30 (1.18)	14.5 (0.57)	28 (1.10)	25 (0.98)	16 (0.63)

3.11.3 SGMAH Servomotors (3000 min^{-1}) With Standard Backlash Gears

Units: mm (in)

Model SGMAH-	Gear Ratio	L	LL	LM	LR	LG	B	LD	LB	L1	L2	L3	Q	QK	S
01□□AJ1□1	1/5	191.5 (7.54)	131.5 (5.18)	98.5 (3.88)	60 (2.36)	9 (0.35)	57 (2.24)	63 (2.48)	65 (2.56)	30 (1.18)	30 (1.18)	14.5 (0.57)	28 (1.10)	25 (0.98)	16 (0.63)
01□□AJ3□1	3/31	191.5 (7.54)	131.5 (5.18)	98.5 (3.88)	60 (2.36)	9 (0.35)	57 (2.24)	63 (2.48)	65 (2.56)	30 (1.18)	30 (1.18)	14.5 (0.57)	28 (1.10)	25 (0.98)	16 (0.63)
01□□AJC□1	1/21	227 (8.94)	153 (6.02)	120 (4.72)	74 (2.91)	10 (0.39)	69 (2.72)	83 (3.27)	85 (3.35)	36 (1.42)	38 (1.50)	19.5 (0.77)	36 (1.42)	32 (1.26)	20 (0.79)
01□□AJ7□1	1/33	227 (8.94)	153 (6.02)	120 (4.72)	74 (2.91)	10 (0.39)	69 (2.72)	83 (3.27)	85 (3.35)	36 (1.42)	38 (1.50)	19.5 (0.77)	36 (1.42)	32 (1.26)	20 (0.79)

Model SGMAH-	Gear Ratio	Tap×Depth *	LC	LA	LZ	U	W	T	Approx. Mass kg (lb)	Allowable Radial Load N (lbf)	Allowable Thrust Load N (lbf)
A3□□AJ1□1	1/5	M4×8L	60 (2.36)	70 (2.76)	5.5 (0.22)	3 (0.12)	5 (0.20)	5 (0.20)	0.9 (2.0)	145 (33)	125 (28)
A3□□AJ3□1	3/31	M4×8L	60 (2.36)	70 (2.76)	5.5 (0.22)	3 (0.12)	5 (0.20)	5 (0.20)	0.9 (2.0)		
A3□□AJC□1	1/21	M4×8L	60 (2.36)	70 (2.76)	5.5 (0.22)	3 (0.12)	5 (0.20)	5 (0.20)	1.0 (2.2)	185 (42)	
A3□□AJ7□1	1/33	M4×8L	60 (2.36)	70 (2.76)	5.5 (0.22)	3 (0.12)	5 (0.20)	5 (0.20)	1.0 (2.2)		
A5□□AJ1□1	1/5	M4×8L	60 (2.36)	70 (2.76)	5.5 (0.22)	3 (0.12)	5 (0.20)	5 (0.20)	1.0 (2.2)	145 (33)	
A5□□AJ3□1	3/31	M4×8L	70 (2.76)	80 (3.15)	6.6 (0.26)	3 (0.12)	5 (0.20)	5 (0.20)	1.2 (2.7)	215 (49)	145 (33)
A5□□AJC□1	1/21	M4×8L	70 (2.76)	80 (3.15)	6.6 (0.26)	3 (0.12)	5 (0.20)	5 (0.20)	1.3 (2.9)	230 (52)	
A5□□AJ7□1	1/33	M4×8L	70 (2.76)	80 (3.15)	6.6 (0.26)	3 (0.12)	5 (0.20)	5 (0.20)	1.3 (2.9)	245 (56)	
01□□AJ1□1	1/5	M4×8L	70 (2.76)	80 (3.15)	6.6 (0.26)	3 (0.12)	5 (0.20)	5 (0.20)	1.3 (2.9)	175 (40)	
01□□AJ3□1	3/31	M4×8L	70 (2.76)	80 (3.15)	6.6 (0.26)	3 (0.12)	5 (0.20)	5 (0.20)	1.3 (2.9)	215 (49)	
01□□AJC□1	1/21	M5×10L	90 (3.54)	105 (4.13)	9 (0.35)	3.5 (0.14)	6 (0.24)	6 (0.24)	2.4 (5.3)	455 (103)	235 (53)
01□□AJ7□1	1/33	M5×10L	90 (3.54)	105 (4.13)	9 (0.35)	3.5 (0.14)	6 (0.24)	6 (0.24)	2.4 (5.3)	480 (109)	

INFO

1. The dimensions for L and LL of a servomotor incorporating an encoder with super-capacitor (model: SGMAH-□□□4) are as shown below.
   SGMAH-A3, A5, and 01: L-dimension +12 mm (0.47 in), LL-dimension +12 mm (0.47 in)
2. The working point of the SGMAH servomotor radial load is at the position of minus 5 mm from the shaft end.

- Dimensional Tolerances

Units: mm (in)

Model SGMAH-	Flange Face Dimensions	Shaft-end Dimensions
	LB	S
A3□□AJ1□1	$56^{0}_{-0.030}\left(2.20^{0}_{-0.0012}\right)$	$14^{0}_{-0.018}\left(0.55^{0}_{-0.0007}\right)$
A3□□AJ3□1	$56^{0}_{-0.030}\left(2.20^{0}_{-0.0012}\right)$	$14^{0}_{-0.018}\left(0.55^{0}_{-0.0007}\right)$
A3□□AJC□1	$56^{0}_{-0.030}\left(2.20^{0}_{-0.0012}\right)$	$14^{0}_{-0.018}\left(0.55^{0}_{-0.0007}\right)$
A3□□AJ7□1	$56^{0}_{-0.030}\left(2.20^{0}_{-0.0012}\right)$	$14^{0}_{-0.018}\left(0.55^{0}_{-0.0007}\right)$
A5□□AJ1□1	$56^{0}_{-0.030}\left(2.20^{0}_{-0.0012}\right)$	$14^{0}_{-0.018}\left(0.55^{0}_{-0.0007}\right)$
A5□□AJ3□1	$65^{0}_{-0.030}\left(2.56^{0}_{-0.0012}\right)$	$16^{0}_{-0.018}\left(0.63^{0}_{-0.0007}\right)$
A5□□AJC□1	$65^{0}_{-0.030}\left(2.56^{0}_{-0.0012}\right)$	$16^{0}_{-0.018}\left(0.63^{0}_{-0.0007}\right)$
A5□□AJ7□1	$65^{0}_{-0.030}\left(2.56^{0}_{-0.0012}\right)$	$16^{0}_{-0.018}\left(0.63^{0}_{-0.0007}\right)$
01□□AJ1□1	$65^{0}_{-0.030}\left(2.56^{0}_{-0.0012}\right)$	$16^{0}_{-0.018}\left(0.63^{0}_{-0.0007}\right)$
01□□AJ3□1	$65^{0}_{-0.030}\left(2.56^{0}_{-0.0012}\right)$	$16^{0}_{-0.018}\left(0.63^{0}_{-0.0007}\right)$
01□□AJC□1	$85^{0}_{-0.035}\left(3.35^{0}_{-0.0014}\right)$	$20^{0}_{-0.021}\left(0.79^{0}_{-0.0008}\right)$
01□□AJ7□1	$85^{0}_{-0.035}\left(3.35^{0}_{-0.0014}\right)$	$20^{0}_{-0.021}\left(0.79^{0}_{-0.0008}\right)$

3.11.3 SGMAH Servomotors (3000 min^{-1}) With Standard Backlash Gears

(2) 200 W, 400 W, 750 W

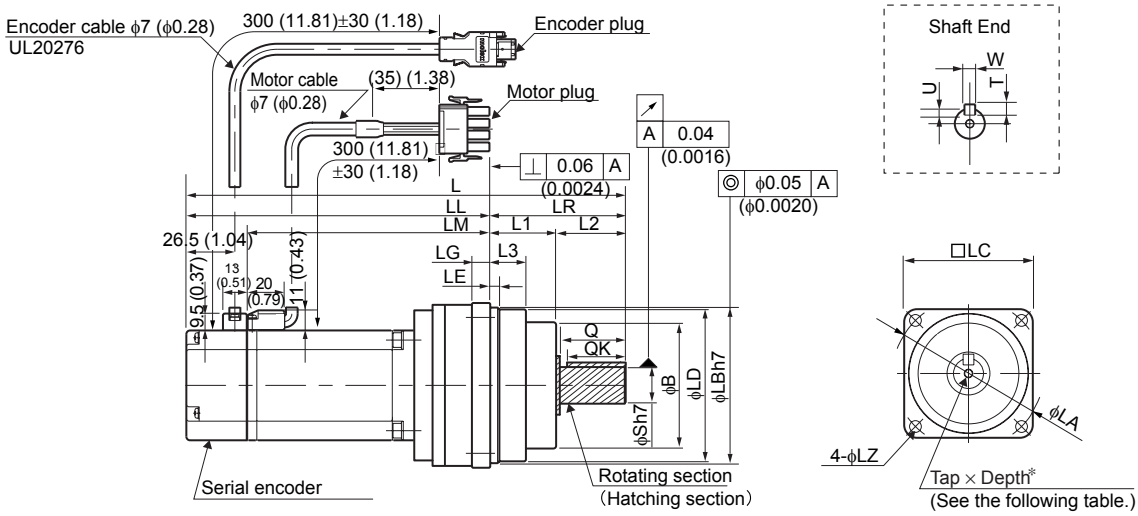

Units: mm (in)

Model SGMAH-	Gear Ratio	L	LL	LM	LR	LE	LG	B	LD	LB	L1	L2	L3	Q	QK	S
02□□AJ1□1	1/5	212 (8.35)	138 (5.43)	104.5 (4.11)	74 (2.91)	4 (0.16)	10 (0.39)	69 (2.72)	83 (3.27)	85 (3.35)	36 (1.42)	38 (1.50)	19.5 (0.77)	36 (1.42)	32 (1.26)	20 (0.79)
02□□AJ3□1	3/31	212 (8.35)	138 (5.43)	104.5 (4.11)	74 (2.91)	4 (0.16)	10 (0.39)	69 (2.72)	83 (3.27)	85 (3.35)	36 (1.42)	38 (1.50)	19.5 (0.77)	36 (1.42)	32 (1.26)	20 (0.79)
02□□AJC□1	1/21	249.5 (9.82)	165.5 (6.52)	131.5 (5.18)	84 (3.31)	4 (0.16)	12 (0.47)	82 (3.23)	98 (3.86)	100 (3.94)	40 (1.57)	40 (1.57)	23 (0.91)	42 (1.65)	36 (1.42)	25 (0.98)
02□□AJ7□1	1/33	249.5 (9.82)	165.5 (6.52)	131.5 (5.18)	84 (3.31)	4 (0.16)	12 (0.47)	82 (3.23)	98 (3.86)	100 (3.94)	40 (1.57)	40 (1.57)	23 (0.91)	42 (1.65)	36 (1.42)	25 (0.98)
04□□AJ1□1	1/5	240 (9.45)	166 (6.54)	133 (5.24)	74 (2.91)	4 (0.16)	10 (0.39)	69 (2.72)	83 (3.27)	85 (3.35)	36 (1.42)	38 (1.50)	19.5 (0.77)	36 (1.42)	32 (1.26)	20 (0.79)
04□□AJ3□1	3/31	256.5 (10.10)	172.5 (6.79)	139 (5.47)	84 (3.31)	4 (0.16)	12 (0.47)	82 (3.23)	98 (3.86)	100 (3.94)	40 (1.57)	44 (1.73)	23 (0.91)	42 (1.65)	36 (1.42)	25 (0.98)
04□□AJC□1	1/21	305.5 (12.03)	200.5 (7.89)	167 (6.57)	105 (4.13)	5 (0.20)	13 (0.51)	93 (3.66)	112 (4.41)	115 (4.53)	45 (1.77)	60 (2.36)	26.5 (1.04)	58 (2.28)	50 (1.97)	32 (1.26)
04□□AJ7□1	1/33	305.5 (12.03)	200.5 (7.89)	167 (6.57)	105 (4.13)	5 (0.20)	13 (0.51)	93 (3.66)	112 (4.41)	115 (4.53)	45 (1.77)	60 (2.36)	26.5 (1.04)	58 (2.28)	50 (1.97)	32 (1.26)
08□□AJ1□1	1/5	277 (10.91)	193 (7.60)	159.5 (6.28)	84 (3.31)	4 (0.16)	12 (0.47)	82 (3.23)	98 (3.86)	100 (3.94)	40 (1.57)	44 (1.73)	23 (0.91)	42 (1.65)	36 (1.42)	25 (0.98)
08□□AJ3□1	3/31	301 (11.85)	196 (7.72)	162.5 (6.40)	105 (4.13)	5 (0.20)	13 (0.51)	93 (3.66)	112 (4.41)	115 (4.53)	45 (1.77)	60 (2.36)	26.5 (1.04)	58 (2.28)	50 (1.97)	32 (1.26)
08□□AJC□1	1/21	330 (12.99)	223 (8.78)	189.5 (7.46)	107 (4.21)	10 (0.39)	15 (0.59)	107 (4.21)	134 (5.28)	140 (5.51)	44 (1.73)	63 (2.48)	42 (1.65)	60 (2.36)	45 (1.77)	40 (1.57)
08□□AJ7□1	1/33	330 (12.99)	223 (8.78)	189.5 (7.46)	107 (4.21)	10 (0.39)	15 (0.59)	107 (4.21)	134 (5.28)	140 (5.51)	44 (1.73)	63 (2.48)	42 (1.65)	60 (2.36)	45 (1.77)	40 (1.57)

Model SGMAH-	Gear Ratio	LC	LA	LZ	Tap×Depth *	U	W	T	Approx. Mass kg (lb)	Allowable Radial Load N (lbf)	Allowable Thrust Load N (lbf)
02□□AJ1□1	1/5	90 (3.54)	105 (4.13)	9 (0.35)	M5×10L	3.5 (0.14)	6 (0.24)	6 (0.24)	2.8 (6.2)	275 (62)	235 (53)
02□□AJ3□1	3/31	90 (3.54)	105 (4.13)	9 (0.35)	M5×10L	3.5 (0.14)	6 (0.24)	6 (0.24)	2.8 (6.2)	360 (82)	
02□□AJC□1	1/21	105 (4.13)	120 (4.72)	9 (0.35)	M6×12L	4 (0.16)	8 (0.31)	7 (0.28)	4.2 (9.3)	585 (133)	290 (66)
02□□AJ7□1	1/33	105 (4.13)	120 (4.72)	9 (0.35)	M6×12L	4 (0.16)	8 (0.31)	7 (0.28)	4.2 (9.3)	635 (144)	
04□□AJ1□1	1/5	90 (3.54)	105 (4.13)	9 (0.35)	M5×10L	3.5 (0.14)	6 (0.24)	6 (0.24)	3.4 (7.5)	275 (62)	235 (53)
04□□AJ3□1	3/31	105 (4.13)	120 (4.72)	9 (0.35)	M6×12L	4 (0.16)	8 (0.31)	7 (0.28)	4.3 (9.5)	460 (104)	290 (66)
04□□AJC□1	1/21	120 (4.72)	135 (5.31)	11 (0.43)	M8×16L	5 (0.20)	10 (0.39)	8 (0.31)	6.4 (14.1)	655 (149)	310 (70)
04□□AJ7□1	1/33	120 (4.72)	135 (5.31)	11 (0.43)	M8×16L	5 (0.20)	10 (0.39)	8 (0.31)	6.4 (14.1)	755 (171)	
08□□AJ1□1	1/5	105 (4.13)	120 (4.72)	9 (0.35)	M6×12L	4 (0.16)	8 (0.31)	7 (0.28)	6.0 (13.2)	355 (80)	290 (66)
08□□AJ3□1	3/31	120 (4.72)	135 (5.31)	11 (0.43)	M8×16L	5 (0.20)	10 (0.39)	8 (0.31)	7.5 (16.5)	525 (119)	310 (70)
08□□AJC□1	1/21	145 (5.71)	165 (6.50)	14 (0.55)	M10×20L	5 (0.20)	12 (0.47)	8 (0.31)	12.4 (27.3)	1070 (243)	490 (111)
08□□AJ7□1	1/33	145 (5.71)	165 (6.50)	14 (0.55)	M10×20L	5 (0.20)	12 (0.47)	8 (0.31)	12.4 (27.3)	1205 (273)	

INFO

1. The dimensions for L and LL of a servomotor incorporating an encoder with super-capacitor (model: SGMAH-□□□4) are as shown below.
   SGMAH-02 and 04: L-dimension + 8.2 mm (0.32 in), LL-dimension +8.2 mm (0.32 in)
   SGMAH-08: L-dimension + 0 mm, LL-dimension +0 mm
2. The working point of the SGMAH servomotor radial load is at the position of minus 5 mm from the shaft end.

- Dimensional Tolerances

Units: mm (in)

Model SGMAH-	Flange Face Dimensions	Shaft-end Dimensions
	LB	S
02□□AJ1□1	$85^{0}_{-0.035}\left(3.35^{0}_{-0.0014}\right)$	$20^{0}_{-0.021}\left(0.79^{0}_{-0.0008}\right)$
02□□AJ3□1	$85^{0}_{-0.035}\left(3.35^{0}_{-0.0014}\right)$	$20^{0}_{-0.021}\left(0.79^{0}_{-0.0008}\right)$
02□□AJC□1	$100^{0}_{-0.035}\left(3.94^{0}_{-0.0014}\right)$	$25^{0}_{-0.021}\left(0.98^{0}_{-0.0008}\right)$
02□□AJ7□1	$100^{0}_{-0.035}\left(3.94^{0}_{-0.0014}\right)$	$25^{0}_{-0.021}\left(0.98^{0}_{-0.0008}\right)$
04□□AJ1□1	$85^{0}_{-0.035}\left(3.35^{0}_{-0.0014}\right)$	$20^{0}_{-0.021}\left(0.79^{0}_{-0.0008}\right)$

3.11.3 SGMAH Servomotors (3000 min^{-1}) With Standard Backlash Gears

Units: mm (in)

Model SGMAH-	Flange Face Dimensions	Shaft-end Dimensions
	LB	S
04□□AJ3□1	$100^{0}_{-0.035}\left(3.94^{0}_{-0.0014}\right)$	$25^{0}_{-0.021}\left(0.98^{0}_{-0.0008}\right)$
04□□AJC□1	$115^{0}_{-0.035}\left(4.53^{0}_{-0.0014}\right)$	$32^{0}_{-0.025}\left(1.26^{0}_{-0.0010}\right)$
04□□AJ7□1	$115^{0}_{-0.035}\left(4.53^{0}_{-0.0014}\right)$	$32^{0}_{-0.025}\left(1.26^{0}_{-0.0010}\right)$
08□□AJ1□1	$100^{0}_{-0.035}\left(3.94^{0}_{-0.0014}\right)$	$25^{0}_{-0.021}\left(0.98^{0}_{-0.0008}\right)$
08□□AJ3□1	$115^{0}_{-0.035}\left(4.53^{0}_{-0.0014}\right)$	$32^{0}_{-0.025}\left(1.26^{0}_{-0.0010}\right)$
08□□AJC□1	$140^{0}_{-0.040}\left(5.51^{0}_{-0.0016}\right)$	$40^{0}_{-0.025}\left(1.57^{0}_{-0.0010}\right)$
08□□AJ7□1	$140^{0}_{-0.040}\left(5.51^{0}_{-0.0016}\right)$	$40^{0}_{-0.025}\left(1.57^{0}_{-0.0010}\right)$

(3) 300 W, 650 W

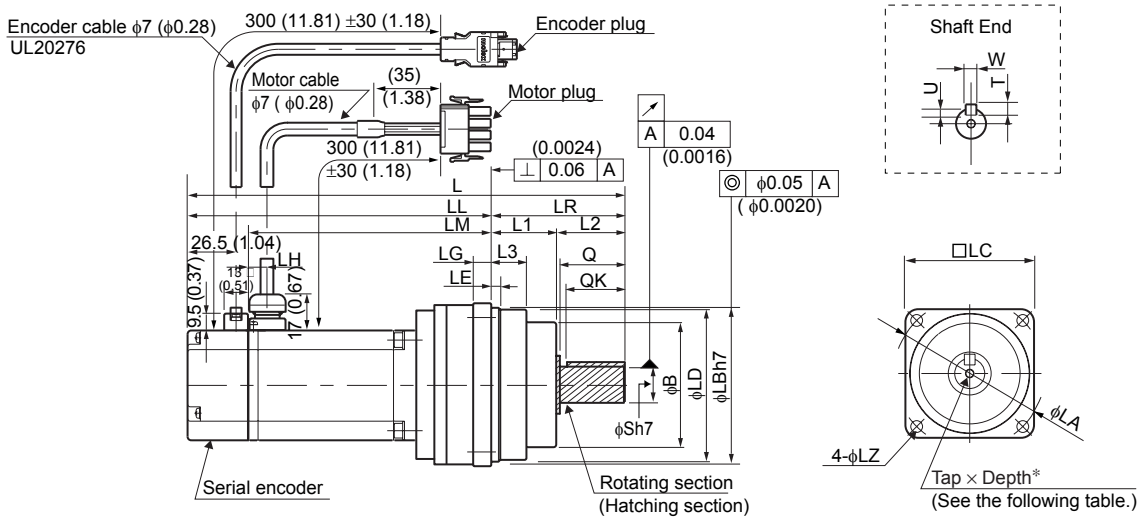

Units: mm (in)

Model SGMAH-	Gear Ratio	L	LL	LM	LR	LE	LG	B	LD	LB	L1	L2	L3	Q	QK	S
03D□AJ1□1	1/5	240 (9.45)	166 (6.54)	133 (5.24)	74 (2.91)	4 (0.16)	10 (0.39)	69 (2.72)	83 (3.27)	85 (3.35)	36 (1.42)	38 (1.50)	19.5 (0.77)	36 (1.42)	32 (1.26)	20 (0.79)
03D□AJ3□1	3/31	256.5 (10.10)	172.5 (6.79)	139 (5.47)	84 (3.31)	4 (0.16)	12 (0.47)	82 (3.23)	98 (3.86)	100 (3.94)	40 (1.57)	44 (1.73)	23 (0.91)	42 (1.65)	36 (1.42)	25 (0.98)
03D□AJC□1	1/21	305.5 (12.03)	200.5 (7.89)	167 (6.57)	105 (4.13)	5 (0.20)	13 (0.51)	93 (3.66)	112 (4.41)	115 (4.53)	45 (1.77)	60 (2.36)	26.5 (1.04)	58 (2.28)	50 (1.97)	32 (1.26)
03D□AJ7□1	1/33	305.5 (12.03)	200.5 (7.89)	167 (6.57)	105 (4.13)	5 (0.20)	13 (0.51)	93 (3.66)	112 (4.41)	115 (4.53)	45 (1.77)	60 (2.36)	26.5 (1.04)	58 (2.28)	50 (1.97)	32 (1.26)
07D□AJ1□1	1/5	277 (10.91)	193 (7.60)	159.5 (6.28)	84 (3.31)	4 (0.16)	12 (0.47)	82 (3.23)	98 (3.86)	100 (3.94)	40 (1.57)	44 (1.73)	23 (0.91)	42 (1.65)	36 (1.42)	25 (0.98)
07D□AJ3□1	3/31	301 (11.85)	196 (7.72)	162.5 (6.40)	105 (4.13)	5 (0.20)	13 (0.51)	93 (3.66)	112 (4.41)	115 (4.53)	45 (1.77)	60 (2.36)	26.5 (1.04)	58 (2.28)	50 (1.97)	32 (1.26)
07D□AJC□1	1/21	330 (12.99)	223 (8.78)	189.5 (7.46)	107 (4.21)	10 (0.39)	15 (0.59)	107 (4.21)	134 (5.28)	140 (5.51)	44 (1.73)	63 (2.48)	42 (1.65)	60 (2.36)	45 (1.77)	40 (1.57)
07D□AJ7□1	1/33	330 (12.99)	223 (8.78)	189.5 (7.46)	107 (4.21)	10 (0.39)	15 (0.59)	107 (4.21)	134 (5.28)	140 (5.51)	44 (1.73)	63 (2.48)	42 (1.65)	60 (2.36)	45 (1.77)	40 (1.57)

Units: mm (in)

Model SGMAH-	Gear Ratio	LC	LA	LZ	LH	Tap×Depth*	U	W	T	Approx. Mass kg (lb)	Allowable Radial Load N (lbf)	Allowable Thrust Load N (lbf)
03D□AJ1□1	1/5	90 (3.54)	105 (4.13)	9 (0.35)	7	M5×10L	3.5 (0.14)	6 (0.24)	6 (0.24)	3.4 (7.5)	275 (62)	235 (53)
03D□AJ3□1	3/31	105 (4.13)	120 (4.72)	9 (0.35)		M6×12L	4 (0.16)	8 (0.31)	7 (0.28)	4.3 (9.5)	460 (104)	290 (66)
03D□AJC□1	1/21	120 (4.72)	135 (5.31)	11 (0.43)		M8×16L	5 (0.20)	10 (0.39)	8 (0.31)	6.4 (14.1)	655 (149)	310 (70)
03D□AJ7□1	1/33	120 (4.72)	135 (5.31)	11 (0.43)		M8×16L	5 (0.20)	10 (0.39)	8 (0.31)	6.4 (14.1)	755 (171)	
07D□AJ1□1	1/5	105 (4.13)	120 (4.72)	9 (0.35)	8	M6×12L	4 (0.16)	8 (0.31)	7 (0.28)	6.0 (13.2)	355 (80)	290 (66)
07D□AJ3□1	3/31	120 (4.72)	135 (5.31)	11 (0.43)		M8×16L	5 (0.20)	10 (0.39)	8 (0.31)	7.5 (16.5)	525 (119)	310 (70)
07D□AJC□1	1/21	145 (5.71)	165 (6.50)	14 (0.55)		M10×20L	5 (0.20)	12 (0.47)	8 (0.31)	12.4 (27.3)	1070 (243)	490 (111)
07D□AJ7□1	1/33	145 (5.71)	165 (6.50)	14 (0.55)		M10×20L	5 (0.20)	12 (0.47)	8 (0.31)	12.4 (27.3)	1205 (273)	

INFO

1. The dimensions for L and LL of a servomotor incorporating an encoder with super-capacitor (model: SGMAH-□□□4) are as shown below.
   SGMAH-03: L-dimension + 8.2 mm (0.32 in), LL-dimension +8.2 mm (0.32 in)
   SGMAH-07: L-dimension + 0 mm, LL-dimension +0 mm
2. The working point of the SGMAH servomotor radial load is at the position of minus 5 mm from the shaft end.

- Dimensional Tolerances

Units: mm (in)

Model SGMAH-	Flange Face Dimensions	Shaft-end Dimensions
	LB	S
03D□AJ1□1	$85^{0}_{-0.035}\left(3.35^{0}_{-0.0014}\right)$	$20^{0}_{-0.021}\left(0.79^{0}_{-0.0008}\right)$
03D□AJ3□1	$100^{0}_{-0.035}\left(3.94^{0}_{-0.0014}\right)$	$25^{0}_{-0.021}\left(0.98^{0}_{-0.0008}\right)$
03D□AJC□1	$115^{0}_{-0.035}\left(4.53^{0}_{-0.0014}\right)$	$32^{0}_{-0.025}\left(1.26^{0}_{-0.0010}\right)$
03D□AJ7□1	$115^{0}_{-0.035}\left(4.53^{0}_{-0.0014}\right)$	$32^{0}_{-0.025}\left(1.26^{0}_{-0.0010}\right)$
07D□AJ1□1	$100^{0}_{-0.035}\left(3.94^{0}_{-0.0014}\right)$	$25^{0}_{-0.021}\left(0.98^{0}_{-0.0008}\right)$
07D□AJ3□1	$115^{0}_{-0.035}\left(4.53^{0}_{-0.0014}\right)$	$32^{0}_{-0.025}\left(1.26^{0}_{-0.0010}\right)$
07D□AJC□1	$140^{0}_{-0.040}\left(5.51^{0}_{-0.0016}\right)$	$40^{0}_{-0.025}\left(1.57^{0}_{-0.0010}\right)$
07D□AJ7□1	$140^{0}_{-0.040}\left(5.51^{0}_{-0.0016}\right)$	$40^{0}_{-0.025}\left(1.57^{0}_{-0.0010}\right)$

3.11.4 SGMAH Servomotors (3000 min^{-1}) With Standard Backlash Gears and Brakes

(1) 30 W, 50 W, 100 W

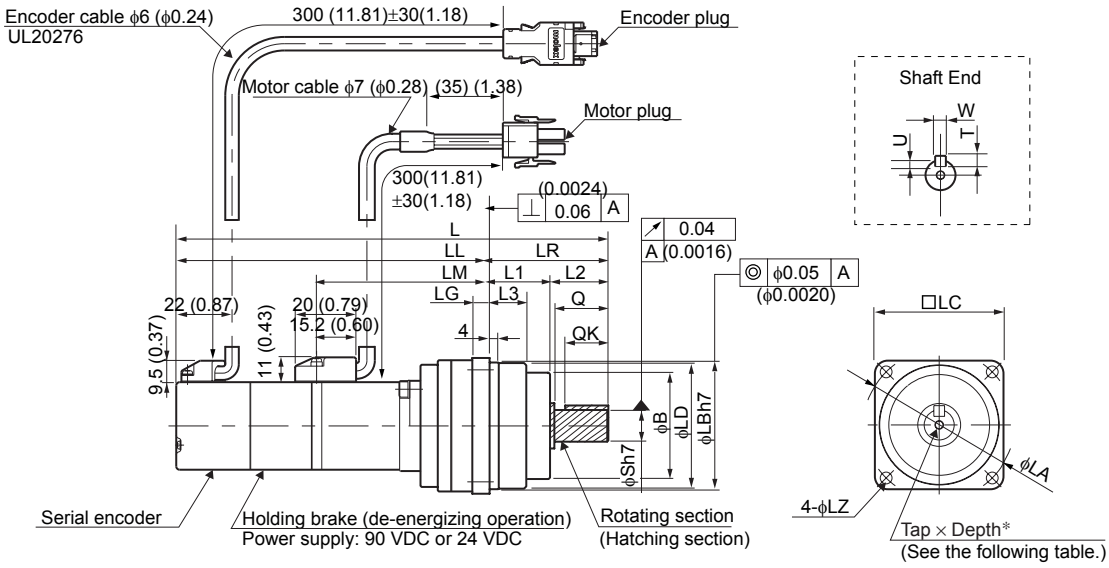

Units: mm (in)

Model SGMAH-	Gear Ratio	L	LL	LM	LR	LG	B	LD	LB	L1	L2	L3	Q	QK	S
A3□□AJ1□□	1/5	188.5 (7.42)	133.5 (5.26)	68.5 (2.70)	55 (2.17)	8 (0.31)	47 (1.85)	55.5 (2.19)	56 (2.20)	28 (1.10)	27 (1.06)	17 (0.67)	25 (0.98)	20 (0.79)	14 (0.55)
A3□□AJ3□□	3/31	188.5 (7.42)	133.5 (5.26)	68.5 (2.70)	55 (2.17)	8 (0.31)	47 (1.85)	55.5 (2.19)	56 (2.20)	28 (1.10)	27 (1.06)	17 (0.67)	25 (0.98)	20 (0.79)	14 (0.55)
A3□□AJC□□	1/21	203.5 (8.01)	148.5 (5.85)	83.5 (3.29)	55 (2.17)	8 (0.31)	47 (1.85)	55.5 (2.19)	56 (2.20)	28 (1.10)	27 (1.06)	17 (0.67)	25 (0.98)	20 (0.79)	14 (0.55)
A3□□AJ7□□	1/33	203.5 (8.01)	148.5 (5.85)	83.5 (3.29)	55 (2.17)	8 (0.31)	47 (1.85)	55.5 (2.19)	56 (2.20)	28 (1.10)	27 (1.06)	17 (0.67)	25 (0.98)	20 (0.79)	14 (0.55)
A5□□AJ1□□	1/5	196 (7.72)	141 (5.55)	76.0 (2.99)	55 (2.17)	8 (0.31)	47 (1.85)	55.5 (2.19)	56 (2.20)	28 (1.10)	27 (1.06)	17 (0.67)	25 (0.98)	20 (0.79)	14 (0.55)
A5□□AJ3□□	3/31	206 (8.11)	146 (5.75)	77.0 (3.03)	60 (2.36)	9 (0.35)	57 (2.24)	63 (2.48)	65 (2.56)	30 (1.18)	30 (1.18)	14.5 (0.57)	28 (1.10)	25 (0.98)	16 (0.63)
A5□□AJC□□	1/21	223 (8.78)	163 (6.42)	94.0 (3.70)	60 (2.36)	9 (0.35)	57 (2.24)	63 (2.48)	65 (2.56)	30 (1.18)	30 (1.18)	14.5 (0.57)	28 (1.10)	25 (0.98)	16 (0.63)
A5□□AJ7□□	1/33	223 (8.78)	163 (6.42)	94.0 (3.70)	60 (2.36)	9 (0.35)	57 (2.24)	63 (2.48)	65 (2.56)	30 (1.18)	30 (1.18)	14.5 (0.57)	28 (1.10)	25 (0.98)	16 (0.63)
01□□AJ1□□	1/5	232 (9.13)	172 (6.77)	98.5 (3.88)	60 (2.36)	9 (0.35)	25 (0.98)	63 (2.48)	65 (2.56)	30 (1.18)	30 (1.18)	14.5 (0.57)	28 (1.10)	25 (0.98)	16 (0.63)
01□□AJ3□□	3/31	232 (9.13)	172 (6.77)	98.5 (3.88)	60 (2.36)	9 (0.35)	25 (0.98)	63 (2.48)	65 (2.56)	30 (1.18)	30 (1.18)	14.5 (0.57)	28 (1.10)	25 (0.98)	16 (0.63)
01□□AJC□□	1/21	268 (10.6)	194 (7.64)	120 (4.72)	74 (2.91)	10 (0.39)	69 (2.72)	83 (3.27)	85 (3.35)	36 (1.42)	38 (1.50)	19.5 (0.77)	36 (1.42)	32 (1.26)	20 (0.79)
01□□AJ7□□	1/33	268 (10.6)	194 (7.64)	120 (4.72)	74 (2.91)	10 (0.39)	69 (2.72)	83 (3.27)	85 (3.35)	36 (1.42)	38 (1.50)	19.5 (0.77)	36 (1.42)	32 (1.26)	20 (0.79)

Model SGMAH-	Gear Ratio	LC	LA	LZ	Tap×Depth	U	W	T	Approx. Mass kg (lb)	Allowable Radial Load N (lbf)	Allowable Thrust Load N (lbf)
A3□□AJ1□□	1/5	60 (2.36)	70 (2.76)	5.5 (0.22)	M4×8L	3 (0.12)	5 (0.20)	5 (0.20)	1.2 (2.7)	145 (33)	125 (28)
A3□□AJ3□□	3/31	60 (2.36)	70 (2.76)	5.5 (0.22)	M4×8L	3 (0.12)	5 (0.20)	5 (0.20)	1.2 (2.7)		
A3□□AJC□□	1/21	60 (2.36)	70 (2.76)	5.5 (0.22)	M4×8L	3 (0.12)	5 (0.20)	5 (0.20)	1.3 (2.9)	185 (42)	
A3□□AJ7□□	1/33	60 (2.36)	70 (2.76)	5.5 (0.22)	M4×8L	3 (0.12)	5 (0.20)	5 (0.20)	1.3 (2.9)		
A5□□AJ1□□	1/5	60 (2.36)	70 (2.76)	5.5 (0.22)	M4×8L	3 (0.12)	5 (0.20)	5 (0.20)	1.3 (2.9)	145 (33)	
A5□□AJ3□□	3/31	70 (2.76)	80 (3.15)	6.6 (0.26)	M4×8L	3 (0.12)	5 (0.20)	5 (0.20)	1.5 (3.3)	215 (49)	145 (33)
A5□□AJC□□	1/21	70 (2.76)	80 (3.15)	6.6 (0.26)	M4×8L	3 (0.12)	5 (0.20)	5 (0.20)	1.6 (3.5)	230 (52)	
A5□□AJ7□□	1/33	70 (2.76)	80 (3.15)	6.6 (0.26)	M4×8L	3 (0.12)	5 (0.20)	5 (0.20)	1.6 (3.5)	245 (56)	
01□□AJ1□□	1/5	70 (2.76)	80 (3.15)	6.6 (0.26)	M4×8L	3 (0.12)	5 (0.20)	5 (0.20)	1.6 (3.5)	175 (40)	
01□□AJ3□□	3/31	70 (2.76)	80 (3.15)	6.6 (0.26)	M4×8L	3 (0.12)	5 (0.20)	5 (0.20)	1.6 (3.5)	215 (49)	
01□□AJC□□	1/21	90 (3.54)	105 (4.13)	9 (0.35)	M5×10L	3.5 (0.14)	6 (0.24)	6 (0.24)	2.7 (6.0)	455 (103)	235 (53)
01□□AJ7□□	1/33	90 (3.54)	105 (4.13)	9 (0.35)	M5×10L	3.5 (0.14)	6 (0.24)	6 (0.24)	2.7 (6.0)	480 (109)	

INFO

1. The dimensions for L and LL of a servomotor incorporating an encoder with super-capacitor (model: SGMAH-□□□4) are as shown below.
   SGMAH-03, A5, and 01: L-dimension +12 mm (0.47 in), LL-dimension +12 mm (0.47 in)
2. The working point of the SGMAH servomotor radial load is at the position of minus 5 mm from the shaft end.

- Dimensional Tolerances

Units: mm (in)

Model SGMAH-	Flange Face Dimensions	Shaft-end Dimensions
	LB	S
A3□□AJ1□□	$56^{0}_{-0.030}\left(2.20^{0}_{-0.0012}\right)$	$14^{0}_{-0.018}\left(0.55^{0}_{-0.0007}\right)$
A3□□AJ3□□	$56^{0}_{-0.030}\left(2.20^{0}_{-0.0012}\right)$	$14^{0}_{-0.018}\left(0.55^{0}_{-0.0007}\right)$
A3□□AJC□□	$56^{0}_{-0.030}\left(2.20^{0}_{-0.0012}\right)$	$14^{0}_{-0.018}\left(0.55^{0}_{-0.0007}\right)$
A3□□AJ7□□	$56^{0}_{-0.030}\left(2.20^{0}_{-0.0012}\right)$	$14^{0}_{-0.018}\left(0.55^{0}_{-0.0007}\right)$
A5□□AJ1□□	$56^{0}_{-0.030}\left(2.20^{0}_{-0.0012}\right)$	$14^{0}_{-0.018}\left(0.55^{0}_{-0.0007}\right)$
A5□□AJ3□□	$65^{0}_{-0.030}\left(2.56^{0}_{-0.0012}\right)$	$16^{0}_{-0.018}\left(0.63^{0}_{-0.0007}\right)$

3.11.4 SGMAH Servomotors (3000 min^{-1}) With Standard Backlash Gears and Brakes

Units: mm (in)

Model SGMAH-	Flange Face Dimensions	Shaft-end Dimensions
	LB	S
A5□□AJC□□	$65^{0}_{-0.030}\left(2.56^{0}_{-0.0012}\right)$	$16^{0}_{-0.018}\left(0.63^{0}_{-0.0007}\right)$
A5□□AJ7□□	$65^{0}_{-0.030}\left(2.56^{0}_{-0.0012}\right)$	$16^{0}_{-0.018}\left(0.63^{0}_{-0.0007}\right)$
01□□AJ1□□	$65^{0}_{-0.030}\left(2.56^{0}_{-0.0012}\right)$	$16^{0}_{-0.018}\left(0.63^{0}_{-0.0007}\right)$
01□□AJ3□□	$65^{0}_{-0.030}\left(2.56^{0}_{-0.0012}\right)$	$16^{0}_{-0.018}\left(0.63^{0}_{-0.0007}\right)$
01□□AJC□□	$85^{0}_{-0.035}\left(3.35^{0}_{-0.0014}\right)$	$20^{0}_{-0.021}\left(0.79^{0}_{-0.0008}\right)$
01□□AJ7□□	$85^{0}_{-0.035}\left(3.35^{0}_{-0.0014}\right)$	$20^{0}_{-0.021}\left(0.79^{0}_{-0.0008}\right)$

(2) 200 W, 400 W, 750 W

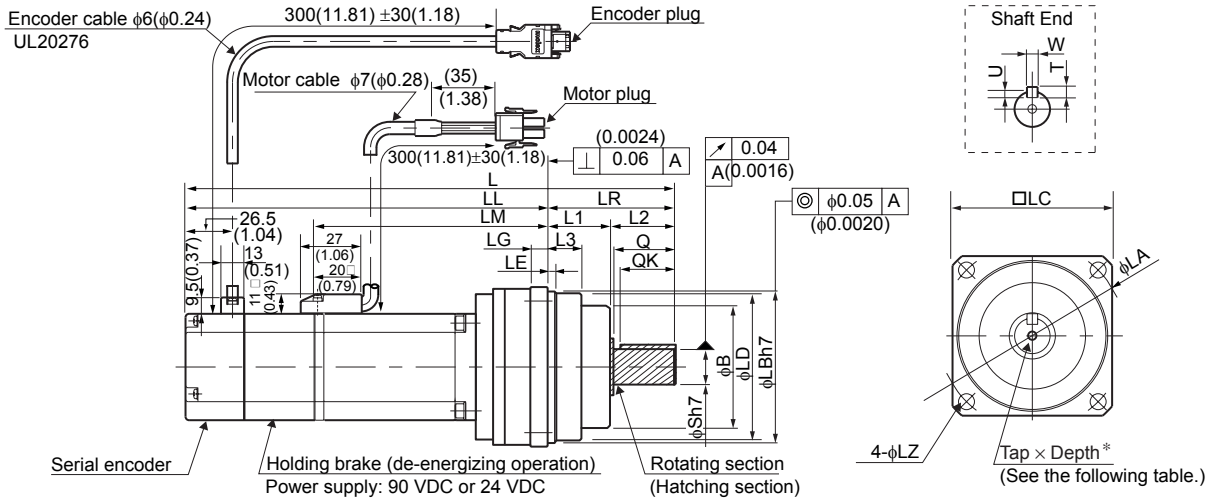

Units: mm (in)

Model SGMAH-	Gear Ratio	L	LL	LM	LR	LE	LG	B	LD	LB	L1	L2	L3	Q	QK	S
02□□AJ1□□	1/5	251.5 (9.90	177.5 (6.99)	104.5 (4.11)	74 (2.91)	4 (0.16)	10 (0.39)	69 (2.72)	83 (3.27)	85 (3.35)	36 (1.42)	38 (1.50)	19.5 (0.77)	36 (1.42)	32 (1.26)	20 (0.79)
02□□AJ3□□	3/31	251.5 (9.90	177.5 (6.99)	104.5 (4.11)	74 (2.91)	4 (0.16)	10 (0.39)	69 (2.72)	83 (3.27)	85 (3.35)	36 (1.42)	36 (1.42)	19.5 (0.77)	36 (1.42)	32 (1.26)	20 (0.79)
02□□AJC□□	1/21	289 (11.38)	205 (8.07)	132 (5.20)	84 (3.31)	4 (0.16)	12 (0.47)	82 (3.23)	98 (3.86)	100 (3.94)	40 (1.57)	42 (1.65)	19.5 (0.77)	42 (1.65)	36 (1.42)	25 (0.98)
02□□AJ7□□	1/33	289 (11.38)	205 (8.07)	132 (5.20)	84 (3.31)	4 (0.16)	12 (0.47)	82 (3.23)	98 (3.86)	100 (3.94)	40 (1.57)	42 (1.65)	19.5 (0.77)	42 (1.65)	36 (1.42)	25 (0.98)
04□□AJ1□□	1/5	297.5 (11.71)	223.5 (8.80)	150.5 (5.93	74 (2.91)	4 (0.16)	10 (0.39)	69 (2.72)	83 (3.27)	85 (3.35)	36 (1.42)	38 (1.50	19.5 (0.77)	36 (1.42)	32 (1.26)	20 (0.79)
04□□AJ3□□	3/31	296 (11.65)	212 (8.35)	139 (5.47)	84 (3.31)	4 (0.16)	12 (0.47)	82 (3.23)	98 (3.86)	100 (3.94)	40 (1.57)	44 (1.73)	23 (0.91	42 (1.65)	36 (1.42)	25 (0.98)
04□□AJC□□	1/21	345 (13.58)	240 (9.45)	167 (6.57)	105 (4.13)	5 (0.20)	13 (0.51)	93 (3.66)	112 (4.41)	115 (4.53)	45 (1.77)	60 (2.36)	26.5 (1.04)	58 (2.28)	50 (1.97)	32 (1.26)
04□□AJ7□□	1/33	345 (13.58)	240 (9.45)	167 (6.57)	105 (4.13)	5 (0.20)	13 (0.51)	93 (3.66)	112 (4.41)	115 (4.53)	45 (1.77)	80 (3.15)	26.5 (1.04)	58 (2.28)	50 (1.97)	32 (1.26)
08□□AJ1□□	1/5	321.5 (12.66)	237.5 (9.35)	158.5 (6.24)	84 (3.31)	4 (0.16)	12 (0.47)	82 (3.23)	98 (3.86)	100 (3.94)	40 (1.57)	44 (1.73)	23 (0.91	42 (1.65)	36 (1.42)	25 (0.98)
08□□AJ3□□	3/31	345.5 (13.60)	240.5 (9.47)	162.5 (6.40)	105 (4.13)	5 (0.20)	13 (0.51)	93 (3.66)	112 (4.41)	115 (4.53)	45 (1.77)	60 (2.36)	26.5 (1.04)	58 (2.28)	50 (1.97)	32 (1.26)
08□□AJC□□	1/21	374.5 (14.74)	267.5 (10.53)	189.5 (7.46)	107 (4.21)	10 (0.39)	15 (0.59)	134 (5.28)	134 (5.28)	140 (5.51)	44 (1.73)	63 (2.48)	42 (1.65)	60 (2.36)	45 (1.77)	40 (1.57)

Units: mm (in)

Model SGMAH-	Gear Ratio	L	LL	LM	LR	LE	LG	B	LD	LB	L1	L2	L3	Q	QK	S
08□□AJ7□□	1/33	374.5 (14.74)	267.5 (10.53)	189.5 (7.46)	107 (4.21)	10 (0.39)	15 (0.59)	134 (5.28)	134 (5.28)	140 (5.51)	44 (1.73)	63 (2.48)	42 (1.65)	60 (2.36)	45 (1.77)	40 (1.57)

Units: mm (in)

Model SGMAH-	Gear Ratio	LC	LA	LZ	Tap×Depth *	U	W	T	Approx. Mass kg (lb)	Allowable Radial Load N (lbf)	Allowable Thrust Load N (lbf)
02□□AJ1□□	1/5	90 (3.54)	105 (4.13)	9 (0.35)	M5×10L	3.5 (0.14)	6 (0.24)	6 (0.24)	3.3 (7.3)	275 (62)	235 (53)
02□□AJ3□□	3/31	90 (3.54)	105 (4.13)	9 (0.35)	M5×10L	3.5 (0.14)	6 (0.24)	6 (0.24)	3.3 (7.3)	360 (82)	
02□□AJC□□	1/21	105 (4.13)	120 (4.72)	9 (0.35)	M6×12L	4 (0.16)	8 (0.31)	7 (0.28)	4.7 (10.4)	585 (132)	290 (66)
02□□AJ7□□	1/33	105 (4.13)	120 (4.72)	9 (0.35)	M6×12L	4 (0.16)	8 (0.31)	7 (0.28)	4.7 (10.4)	635 (133)	
04□□AJ1□□	1/5	90 (3.54)	105 (4.13)	9 (0.35)	M5×10L	3.5 (0.14)	6 (0.24)	6 (0.24)	3.9 (8.6)	275 (62)	235 (53)
04□□AJ3□□	3/31	105 (4.13)	120 (4.72)	9 (0.35)	M6×12L	4 (0.16)	8 (0.31)	7 (0.28)	4.8 (10.6)	460 (104)	290 (66)
04□□AJC□□	1/21	120 (4.72)	135 (5.31)	11 (0.43)	M8×16L	5 (0.20)	10 (0.39)	8 (0.31)	6.9 (15.2)	655 (149)	310 (70)
04□□AJ7□□	1/33	120 (4.72)	135 (5.31)	11 (0.43)	M8×16L	5 (0.20)	10 (0.39)	8 (0.31)	6.9 (15.2)	755 (171)	
08□□AJ1□□	1/5	105 (4.13)	120 (4.72)	9 (0.35)	M6×12L	4 (0.16)	8 (0.31)	7 (0.28)	6.9 (15.2)	355 (80)	290 (66)
08□□AJ3□□	3/31	120 (4.72)	135 (5.31)	11 (0.43)	M8×16L	5 (0.20)	10 (0.39)	8 (0.31)	8.4 (18.5)	525 (119)	310 (70)
08□□AJC□□	1/21	145 (5.71)	165 (6.50)	14 (0.55)	M10×20L	5 (0.20)	12 (0.47)	8 (0.31)	13.3 (29.3)	1070 (243)	490 (111)
08□□AJ7□□	1/33	145 (5.71)	165 (6.50)	14 (0.55)	M10×20L	5 (0.20)	12 (0.47)	8 (0.31)	13.3 (29.3)	1205 (273)	

INFO

1. The dimensions for L and LL of a servomotor incorporating an encoder with super-capacitor (model: SGMAH-□□□4) are as shown below.
   SGMAH-02 and 04: L-dimension + 8.2 mm (0.32 in), LL-dimension +8.2 mm (0.32 in)
   SGMAH-08: L-dimension + 0 mm, LL-dimension +0 mm
2. The working point of the SGMAH servomotor radial load is at the position of minus 5 mm from the shaft end.

• Dimensional Tolerances

Units: mm (in)

Model SGMAH-	Flange Face Dimensions	Shaft-end Dimensions
	LB	S
02□□AJ1□□	$85^{0}_{-0.035}\left(3.35^{0}_{-0.0014}\right)$	$20^{0}_{-0.021}\left(0.79^{0}_{-0.0008}\right)$
02□□AJ3□□	$85^{0}_{-0.035}\left(3.35^{0}_{-0.0014}\right)$	$20^{0}_{-0.021}\left(0.79^{0}_{-0.0008}\right)$
02□□AJC□□	$100^{0}_{-0.035}\left(3.94^{0}_{-0.0014}\right)$	$25^{0}_{-0.021}\left(0.98^{0}_{-0.0008}\right)$
02□□AJ7□□	$100^{0}_{-0.035}\left(3.94^{0}_{-0.0014}\right)$	$25^{0}_{-0.021}\left(0.98^{0}_{-0.0008}\right)$
04□□AJ1□□	$85^{0}_{-0.035}\left(3.35^{0}_{-0.0014}\right)$	$20^{0}_{-0.021}\left(0.79^{0}_{-0.0008}\right)$
04□□AJ3□□	$100^{0}_{-0.035}\left(3.94^{0}_{-0.0014}\right)$	$25^{0}_{-0.021}\left(0.98^{0}_{-0.0008}\right)$
04□□AJC□□	$115^{0}_{-0.035}\left(4.53^{0}_{-0.0014}\right)$	$32^{0}_{-0.025}\left(1.26^{0}_{-0.0010}\right)$
04□□AJ7□□	$115^{0}_{-0.035}\left(4.53^{0}_{-0.0014}\right)$	$32^{0}_{-0.025}\left(1.26^{0}_{-0.0010}\right)$
08□□AJ1□□	$100^{0}_{-0.035}\left(3.94^{0}_{-0.0014}\right)$	$25^{0}_{-0.021}\left(0.98^{0}_{-0.0008}\right)$
08□□AJ3□□	$115^{0}_{-0.035}\left(4.53^{0}_{-0.0014}\right)$	$32^{0}_{-0.025}\left(1.26^{0}_{-0.0010}\right)$
08□□AJC□□	$140^{0}_{-0.040}\left(5.51^{0}_{-0.0016}\right)$	$40^{0}_{-0.025}\left(1.57^{0}_{-0.0010}\right)$
08□□AJ7□□	$140^{0}_{-0.040}\left(5.51^{0}_{-0.0016}\right)$	$40^{0}_{-0.025}\left(1.57^{0}_{-0.0010}\right)$

(3) 300 W, 650 W

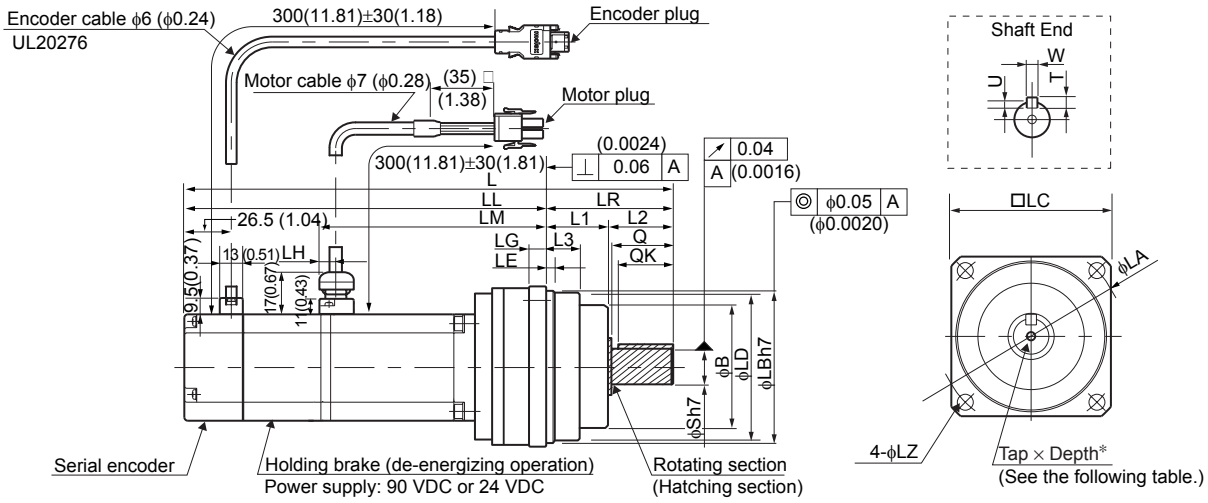

Units: mm (in)

Model SGMAH-	Gear Ratio	L	LL	LM	LR	LE	LG	B	LD	LB	L1	L2	L3	Q	QK	S
03D□AJ1□□	1/5	297.5 (11.71)	223.5 (8.80)	150.5 (5.93	74 (2.91)	4 (0.16)	10 (0.39)	69 (2.72)	83 (3.27)	85 (3.35)	36 (1.42)	38 (1.50	19.5 (0.77)	36 (1.42)	32 (1.26)	20 (0.79)
03D□AJ3□□	3/31	296 (11.65)	212 (8.35)	139 (5.47)	84 (3.31)	4 (0.16)	12 (0.47)	82 (3.23)	98 (3.86)	100 (3.94)	40 (1.57)	44 (1.73)	23 (0.91	42 (1.65)	36 (1.42)	25 (0.98)
03D□AJC□□	1/21	345 (13.58)	240 (9.45)	167 (6.57)	105 (4.13)	5 (0.20)	13 (0.51)	93 (3.66)	112 (4.41)	115 (4.53)	45 (1.77)	60 (2.36)	26.5 (1.04)	58 (2.28)	50 (1.97)	32 (1.26)
03D□AJ7□□	1/33	345 (13.58)	240 (9.45)	167 (6.57)	105 (4.13)	5 (0.20)	13 (0.51)	93 (3.66)	112 (4.41)	115 (4.53)	45 (1.77)	80 (3.15)	26.5 (1.04)	58 (2.28)	50 (1.97)	32 (1.26)
07D□AJ1□□	1/5	321.5 (12.66)	237.5 (9.35)	158.5 (6.24)	84 (3.31)	4 (0.16)	12 (0.47)	82 (3.23)	98 (3.86)	100 (3.94)	40 (1.57)	44 (1.73)	23 (0.91	42 (1.65)	36 (1.42)	25 (0.98)
07D□AJ3□□	3/31	345.5 (13.60)	240.5 (9.47)	162.5 (6.40)	105 (4.13)	5 (0.20)	13 (0.51)	93 (3.66)	112 (4.41)	115 (4.53)	45 (1.77)	60 (2.36)	26.5 (1.04)	58 (2.28)	50 (1.97)	32 (1.26)
07D□AJC□□	1/21	374.5 (14.74)	267.5 (10.53)	189.5 (7.46)	107 (4.21)	10 (0.39)	15 (0.59)	134 (5.28)	134 (5.28)	140 (5.51)	44 (1.73)	63 (2.48)	42 (1.65)	60 (2.36)	45 (1.77)	40 (1.57)
07D□AJ7□□	1/33	374.5 (14.74)	267.5 (10.53)	189.5 (7.46)	107 (4.21)	10 (0.39)	15 (0.59)	134 (5.28)	134 (5.28)	140 (5.51)	44 (1.73)	63 (2.48)	42 (1.65)	60 (2.36)	45 (1.77)	40 (1.57)

Units: mm (in)

Model SGMAH-	Gear Ratio	LC	LA	LZ	LH	Tap×Depth *	U	W	T	Approx. Mass kg (lb)	Allowable Radial Load N (lbf)	Allowable Thrust Load N (lbf)
03D□AJ1□□	1/5	90 (3.54)	105 (4.13)	9 (0.35)	7 (0.28)	M5×10L	3.5 (0.14)	6 (0.24)	6 (0.24)	3.9 (8.60)	275 (62)	235 (53)
03D□AJ3□□	3/31	105 (4.13)	120 (4.72)	9 (0.35)		M6×12L	4 (0.16)	8 (0.31)	7 (0.28)	4.8 (10.6)	460 (104)	290 (66)
03D□AJC□□	1/21	120 (4.72)	135 (5.31)	11 (0.43)		M8×16L	5 (0.20)	10 (0.39)	8 (0.31)	6.9 (15.2)	655 (149)	310 (710)
03D□AJ7□□	1/33	120 (4.72)	135 (5.31)	11 (0.43)		M8×16L	5 (0.20)	10 (0.39)	8 (0.31)	6.9 (15.2)	755 (171)	

3.11.4 SGMAH Servomotors (3000 min^{-1}) With Standard Backlash Gears and Brakes

Units: mm (in)

Model SGMAH-	Gear Ratio	LC	LA	LZ	LH	Tap×Depth *	U	W	T	Approx. Mass kg (lb)	Allowable Radial Load N (lbf)	Allowable Thrust Load N (lbf)
07D□AJ1□□	1/5	105 (4.13)	120 (4.72)	9 (0.35)	8 (0.31)	M6×12L	4 (0.16)	8 (0.31)	7 (0.28)	6.9 (15.2)	355 (80)	290 (66)
07D□AJ3□□	3/31	120 (4.72)	135 (5.31)	11 (0.43)		M8×16L	5 (0.20)	10 (0.39)	8 (0.31)	8.4 (18.5)	525 (119)	310 (70)
07D□AJC□□	1/21	145 (5.71)	165 (6.50)	14 (0.55)		M10×20L	5 (0.20)	12 (0.47)	8 (0.31)	13.3 (29.3)	1070 (243)	490 (111)
07D□AJ7□□	1/33	145 (5.71)	165 (6.50)	14 (0.55)		M10×20L	5 (0.20)	12 (0.47)	8 (0.31)	13.3 (29.3)	1205 (273)	

INFO

1. The dimensions for L and LL of a servomotor incorporating an encoder with super-capacitor (model: SGMAH-□□□4) are as shown below.
   SGMAH-03: L-dimension + 8.2 mm (0.32 in), LL-dimension +8.2 mm (0.32 in)
   SGMAH-07: L-dimension + 0 mm, LL-dimension +0 mm
2. The working point of the SGMAH servomotor radial load is at the position of minus 5 mm from the shaft end.

- Dimensional Tolerances

Units: mm (in)

Model SGMAH-	Flange Face Dimensions	Shaft-end Dimensions
	LB	S
03D□AJ1□□	$85^{0}_{-0.035}\left(3.35^{0}_{-0.0014}\right)$	$20^{0}_{-0.021}\left(0.79^{0}_{-0.0008}\right)$
03D□AJ3□□	$100^{0}_{-0.035}\left(3.94^{0}_{-0.0014}\right)$	$25^{0}_{-0.021}\left(0.98^{0}_{-0.0008}\right)$
03D□AJC□□	$115^{0}_{-0.035}\left(4.53^{0}_{-0.0014}\right)$	$32^{0}_{-0.025}\left(1.26^{0}_{-0.0010}\right)$
03D□AJ7□□	$115^{0}_{-0.035}\left(4.53^{0}_{-0.0014}\right)$	$32^{0}_{-0.025}\left(1.26^{0}_{-0.0010}\right)$
07D□AJ1□□	$100^{0}_{-0.035}\left(3.94^{0}_{-0.0014}\right)$	$25^{0}_{-0.021}\left(0.98^{0}_{-0.0008}\right)$
07D□AJ3□□	$115^{0}_{-0.035}\left(4.53^{0}_{-0.0014}\right)$	$32^{0}_{-0.025}\left(1.26^{0}_{-0.0010}\right)$
07D□AJC□□	$140^{0}_{-0.040}\left(5.51^{0}_{-0.0016}\right)$	$40^{0}_{-0.025}\left(1.57^{0}_{-0.0010}\right)$
07D□AJ7□□	$140^{0}_{-0.040}\left(5.51^{0}_{-0.0016}\right)$	$40^{0}_{-0.025}\left(1.57^{0}_{-0.0010}\right)$

3.11.5 SGMAH Servomotors (3000 min^{-1}) With Low-backlash Gears

(1) 30 W, 50 W, 100 W

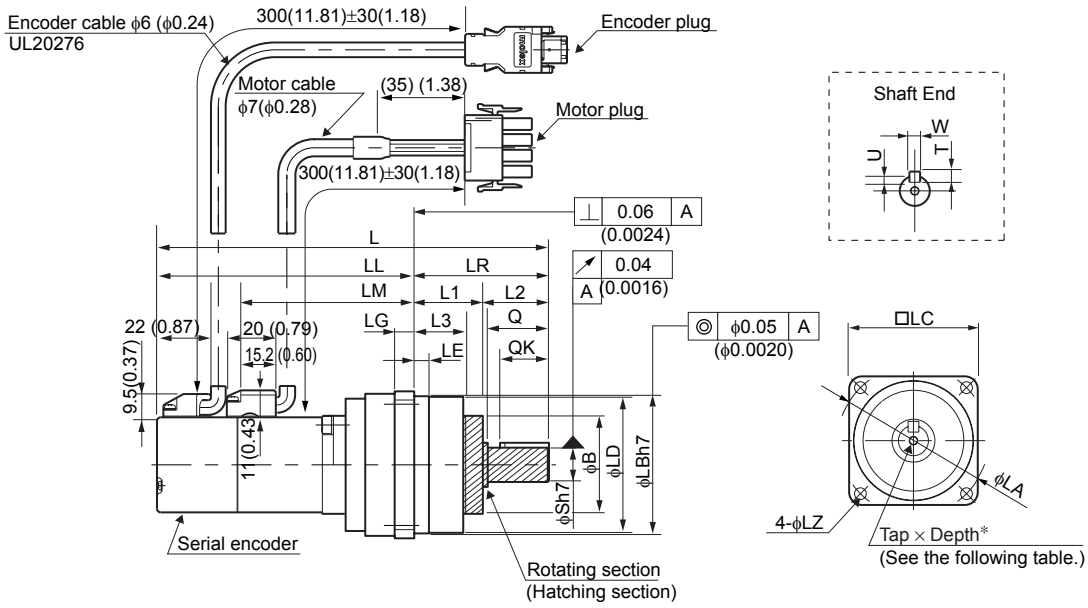

Units: mm (in)

Model SGMAH-	Gear Ratio	L	LL	LM	LR	LE	LG	B	LD	LB	L1	L2	L3	Q	QK	S
A3□□AH1□1	1/5	152.5 (6.00)	97.5 (3.84)	64.5 (2.54)	55 (2.17)	6 (0.24)	8 (0.31)	40 (1.57)	55.5 (2.19)	56 (2.20)	28 (1.10)	27 (1.06)	20 (0.79)	25 (0.98)	20 (0.79)	14 (0.55)
A3□□AH2□1	1/9	152.5 (6.00)	97.5 (3.84)	64.5 (2.54)	55 (2.17)	6 (0.24)	8 (0.31)	40 (1.57)	55.5 (2.19)	56 (2.20)	28 (1.10)	27 (1.06)	20 (0.79)	25 (0.98)	20 (0.79)	14 (0.55)
A3□□AHC□1	1/21	167.5 (6.59)	112.5 (4.43)	79.5 (3.13)	55 (2.17)	6 (0.24)	8 (0.31)	40 (1.57)	55.5 (2.19)	56 (2.20)	28 (1.10)	27 (1.06)	20 (0.79)	25 (0.98)	20 (0.79)	14 (0.55)
A3□□AH7□1	1/33	167.5 (6.59)	112.5 (4.43)	79.5 (3.13)	55 (2.17)	6 (0.24)	8 (0.31)	40 (1.57)	55.5 (2.19)	56 (2.20)	28 (1.10)	27 (1.06)	20 (0.79)	25 (0.98)	20 (0.79)	14 (0.55)
A5□□AH1□1	1/5	160 (6.30)	105 (4.13)	72.0 (2.83)	55 (2.17)	6 (0.24)	8 (0.31)	40 (1.57)	55.5 (2.19)	56 (2.20)	28 (1.10)	27 (1.06)	20 (0.79)	25 (0.98)	20 (0.79)	14 (0.55)
A5□□AH2□1	1/9	166 (6.54)	106 (4.17)	73.0 (2.87)	60 (2.36)	8 (0.31)	9 (0.35)	50 (1.97)	64.5 (2.54)	65 (2.56)	30 (1.18)	30 (1.18)	22 (0.87)	28 (1.10)	25 (0.98)	16 (0.63)
A5□□AHC□1	1/21	183 (7.20)	123 (4.84)	90.0 (3.54)	60 (2.36)	8 (0.31)	9 (0.35)	40 (1.57)	64.5 (2.54)	65 (2.56)	30 (1.18)	30 (1.18)	21 (0.83)	28 (1.10)	25 (0.98)	16 (0.63)
A5□□AH7□1	1/33	183 (7.20)	123 (4.84)	90.0 (3.54)	60 (2.36)	8 (0.31)	9 (0.35)	40 (1.57)	64.5 (2.54)	65 (2.56)	30 (1.18)	30 (1.18)	21 (0.83)	28 (1.10)	25 (0.98)	16 (0.63)
01□□AH1□1	1/5	183.5 (7.22)	123.5 (4.86)	90.5 (3.56)	60 (2.36)	8 (0.31)	9 (0.35)	40 (1.57)	64.5 (2.54)	65 (2.56)	30 (1.18)	30 (1.18)	21 (0.83)	28 (1.10)	25 (0.98)	16 (0.63)
01□□AHB□1	1/11	200.5 (7.89)	140.5 (5.53)	107.5 (4.23)	60 (2.36)	8 (0.31)	9 (0.35)	40 (1.57)	64.5 (2.54)	65 (2.56)	30 (1.18)	30 (1.18)	21 (0.83)	28 (1.10)	25 (0.98)	16 (0.63)
01□□AHC□1	1/21	223.5 (8.80)	149.5 (5.89)	116.5 (4.59)	74 (2.91)	7.5 (0.30)	10 (0.39)	59 (2.32)	84 (3.31)	85 (3.35)	36 (1.42)	38 (1.50)	26 (1.02)	36 (1.42)	32 (1.26)	20 (0.79)
01□□AH7□1	1/33	223.5 (8.80)	149.5 (5.89)	116.5 (4.59)	74 (2.91)	7.5 (0.30)	10 (0.39)	59 (2.32)	84 (3.31)	85 (3.35)	36 (1.42)	38 (1.50)	26 (1.02)	36 (1.42)	32 (1.26)	20 (0.79)

3.11.5 SGMAH Servomotors (3000 min^{-1}) With Low-backlash Gears

Units: mm (in)

Model SGMAH-	Gear Ratio	LC	LA	LZ	Tap×Depth *	U	W	T	Approx. Mass kg (lb)	Allowable Radial Load N (lbf)	Allowable Thrust Load N (lbf)
A3□□AH1□1	1/5	60 (2.36)	70 (2.76)	5.5 (0.22)	M4×8L	3 (0.12)	5 (0.20)	5 (0.20)	1.0 (2.2)	137 (31)	127 (29)
A3□□AH2□1	1/9	60 (2.36)	70 (2.76)	5.5 (0.22)	M4×8L	3 (0.12)	5 (0.20)	5 (0.20)	1.0 (2.2)	176 (40)	
A3□□AHC□1	1/21	60 (2.36)	70 (2.76)	5.5 (0.22)	M4×8L	3 (0.12)	5 (0.20)	5 (0.20)	1.0 (2.2)		
A3□□AH7□1	1/33	60 (2.36)	70 (2.76)	5.5 (0.22)	M4×8L	3 (0.12)	5 (0.20)	5 (0.20)	1.0 (2.2)		
A5□□AH1□1	1/5	60 (2.36)	70 (2.76)	5.5 (0.22)	M4×8L	3 (0.12)	5 (0.20)	5 (0.20)	1.1 (2.4)	137 (31)	
A5□□AH2□1	1/9	70 (2.76)	80 (3.15)	6.6 (0.26)	M4×8L	3 (0.12)	5 (0.20)	5 (0.20)	1.4 (3.1)	206 (47)	147 (33)
A5□□AHC□1	1/21	70 (2.76)	80 (3.15)	6.6 (0.26)	M4×8L	3 (0.12)	5 (0.20)	5 (0.20)	1.3 (2.9)	235 (53)	
A5□□AH7□1	1/33	70 (2.76)	80 (3.15)	6.6 (0.26)	M4×8L	3 (0.12)	5 (0.20)	5 (0.20)	1.3 (2.9)		
01□□AH1□1	1/5	70 (2.76)	80 (3.15)	6.6 (0.26)	M4×8L	3 (0.12)	5 (0.20)	5 (0.20)	1.2 (2.7)	167 (38)	
01□□AHB□1	1/11	70 (2.76)	80 (3.15)	6.6 (0.26)	M4×8L	3 (0.12)	5 (0.20)	5 (0.20)	1.4 (3.1)	216 (49)	
01□□AHC□1	1/21	90 (3.54)	105 (4.13)	9 (0.35)	M5×10L	3.5 (0.14)	6 (0.24)	6 (0.24)	2.7 (6.0)	392 (89)	235 (53)
01□□AH7□1	1/33	90 (3.54)	105 (4.13)	9 (0.35)	M5×10L	3.5 (0.14)	6 (0.24)	6 (0.24)	2.7 (6.0)	431 (98)	

INFO

1. The dimensions for L and LL of a servomotor incorporating an encoder with super-capacitor (model: SGMAH-□□□4) are as shown below.
   SGMAH-03, A5, and 01: L-dimension +12 mm (0.47 in), LL-dimension +12 mm (0.47 in)
2. The working point of the SGMAH servomotor radial load is at the position of minus 5 mm from the shaft end.

- Dimensional Tolerances

Units: mm (in)

Model SGMAH-	Flange Face Dimensions	Shaft-end Dimensions
	LB	S
A3□□AH1□1	$56^{0}_{-0.030}\left(2.20^{0}_{-0.0012}\right)$	$14^{0}_{-0.018}\left(0.55^{0}_{-0.00071}\right)$
A3□□AH2□1	$56^{0}_{-0.030}\left(2.20^{0}_{-0.0012}\right)$	$14^{0}_{-0.018}\left(0.55^{0}_{-0.00071}\right)$
A3□□AHC□1	$56^{0}_{-0.030}\left(2.20^{0}_{-0.0012}\right)$	$14^{0}_{-0.018}\left(0.55^{0}_{-0.00071}\right)$
A3□□AH7□1	$56^{0}_{-0.030}\left(2.20^{0}_{-0.0012}\right)$	$14^{0}_{-0.018}\left(0.55^{0}_{-0.00071}\right)$
A5□□AH1□1	$56^{0}_{-0.030}\left(2.20^{0}_{-0.0012}\right)$	$14^{0}_{-0.018}\left(0.55^{0}_{-0.00071}\right)$
A5□□AH2□1	$65^{0}_{-0.030}\left(2.56^{0}_{-0.0012}\right)$	$16^{0}_{-0.018}\left(0.63^{0}_{-0.00071}\right)$
A5□□AHC□1	$65^{0}_{-0.030}\left(2.56^{0}_{-0.0012}\right)$	$16^{0}_{-0.018}\left(0.63^{0}_{-0.00071}\right)$
A5□□AH7□1	$65^{0}_{-0.030}\left(2.56^{0}_{-0.0012}\right)$	$16^{0}_{-0.018}\left(0.63^{0}_{-0.00071}\right)$
01□□AH1□1	$65^{0}_{-0.030}\left(2.56^{0}_{-0.0012}\right)$	$16^{0}_{-0.018}\left(0.63^{0}_{-0.00071}\right)$
01□□AHB□1	$65^{0}_{-0.030}\left(2.56^{0}_{-0.0012}\right)$	$16^{0}_{-0.018}\left(0.63^{0}_{-0.00071}\right)$
A3□□AHC□1	$85^{0}_{-0.035}\left(3.35^{0}_{-0.0014}\right)$	$20^{0}_{-0.021}\left(0.79^{0}_{-0.00083}\right)$
A3□□AH7□1	$85^{0}_{-0.035}\left(3.35^{0}_{-0.0014}\right)$	$20^{0}_{-0.021}\left(0.79^{0}_{-0.00083}\right)$

3.11.5 SGMAH Servomotors (3000 min^{-1}) With Low-backlash Gears

(2) 200 W, 400 W, 750 W

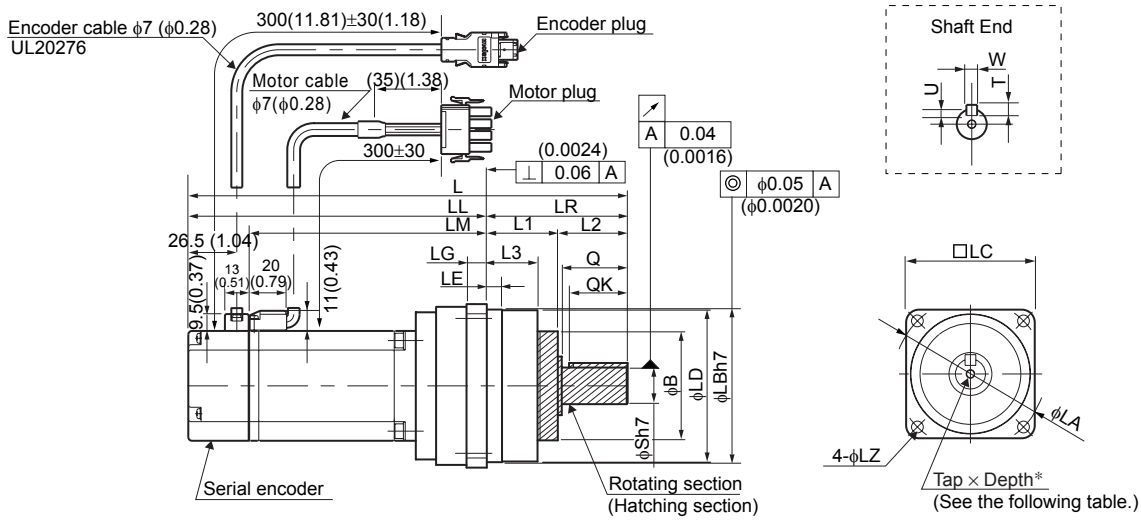

Units: mm (in)

Model SGMAH-	Gear Ratio	L	LL	LM	LR	LE	LG	B	LD	LB	L1	L2	L3	Q	QK	S
02□□AH1□1	1/5	208.5 (8.21)	134.5 (5.30)	101 (3.98)	74 (2.91)	7.5 (0.30)	10 (0.39)	59 (2.32)	84 (3.31)	85 (3.35)	36 (1.42)	38 (1.50)	26 (1.02)	36 (1.42)	32 (1.26)	20 (0.79)
02□□AHB□1	1/11	225.5 (8.88)	151.5 (5.97)	118 (4.65)	74 (2.91)	7.5 (0.30)	10 (0.39)	59 (2.32)	84 (3.31)	85 (3.35)	36 (1.42)	38 (1.50)	26 (1.02)	36 (1.42)	32 (1.26)	20 (0.79)
02□□AHC□1	1/21	243.5 (9.59)	159.5 (6.28)	126 (4.96)	84 (3.31)	12 (0.47)	12 (0.47)	59 (2.32)	96 (3.78)	100 (3.94)	40 (1.57)	44 (1.73)	29 (1.14)	42 (1.65)	36 (1.42)	25 (0.98)
02□□AH7□1	1/33	243.5 (9.59)	159.5 (6.28)	126 (4.96)	84 (3.31)	12 (0.47)	12 (0.47)	59 (2.32)	96 (3.78)	100 (3.94)	40 (1.57)	44 (1.73)	29 (1.14)	42 (1.65)	36 (1.42)	25 (0.98)
04□□AH1□1	1/5	236.5(9 .31)	162.5(6.40)	129 (5.08)	74 (2.91)	7.5 (0.30)	10 (0.39)	59 (2.32)	84 (3.31)	85 (3.35)	36 (1.42)	38 (1.50)	26 (1.02)	36 (1.42)	32 (1.26)	20 (0.79)
04□□AHB□1	1/11	271.5(1 0.69)	187.5(7.38)	154 (6.06)	84 (3.31)	12 (0.47)	12 (0.47)	59 (2.32)	96 (3.78)	100 (3.94)	40 (1.57)	44 (1.73)	29 (1.14)	42 (1.65)	36 (1.42)	25 (0.98)
04□□AHC□1	1/21	300.5 (11.83)	195.5 (7.70)	162 (6.38)	105 (4.13)	14 (0.55)	13 (0.51)	59 (2.32)	112 (4.41)	115 (4.53)	45 (1.77)	60 (2.36)	33 (1.30)	58 (2.28)	50 (1.97)	32 (1.26)
04□□AH7□1	1/33	300.5 (11.83)	195.5 (7.70)	162 (6.38)	105 (4.13)	12.5 (0.49)	13 (0.51)	84 (3.31)	114 (4.49)	115 (4.53)	45 (1.77)	60 (2.36)	33 (1.30)	58 (2.28)	50 (1.97)	32 (1.26)
08□□AH1□1	1/5	271 (10.67)	187 (7.36)	153.5 (6.04)	84 (3.31)	12 (0.47)	12 (0.47)	59 (2.32)	96 (3.78)	100 (3.94)	40 (1.57)	44 (1.73)	29 (1.14)	42 (1.65)	36 (1.42)	25 (0.98)
08□□AHB□1	1/11	321 (12.64)	216 (8.50)	182.5 (7.19)	105 (4.13)	14 (0.55)	13 (0.51)	59 (2.32)	112 (4.41)	115 (4.53)	45 (1.77)	60 (2.36)	33 (1.30)	58 (2.28)	50 (1.97)	32 (1.26)
08□□AHC□1	1/21	365 (14.37)	223 (8.78)	189.5 (7.46)	142 (5.59)	10 (0.39)	15 (0.59)	84 (3.31)	134 (5.28)	140 (5.51)	57 (2.24)	85 (3.35)	40 (1.57)	82 (3.23)	70 (2.76)	40 (1.57)
08□□AH7□1	1/33	365 (14.37)	223 (8.78)	189.5 (7.46)	142 (5.59)	10 (0.39)	15 (0.59)	84 (3.31)	134 (5.28)	140 (5.51)	57 (2.24)	85 (3.35)	40 (1.57)	82 (3.23)	70 (2.76)	40 (1.57)

Units: mm (in)

Model SGMAH-	Gear Ratio	LC	LA	LZ	Tap×Depth *	U	W	T	Approx. Mass kg (lb)	Allowable Radial Load N (lbf)	Allowable Thrust Load N (lbf)
02□□AH1□1	1/5	90 (3.54)	105 (4.13)	9 (0.35)	M5×10L	3.5 (0.14)	6 (0.24)	6 (0.24)	3.0 (6.6)	245 (56)	235 (53)
02□□AHB□1	1/11	90 (3.54)	105 (4.13)	9 (0.35)	M5×10L	3.5 (0.14)	6 (0.24)	6 (0.24)	3.5 (7.7)	323 (73)	
02□□AHC□1	1/21	105 (4.13)	120 (4.72)	9 (0.35)	M6×12L	4 (0.16)	8 (0.31)	7 (0.28)	3.7 (8.2)	549 (124)	294 (67)
02□□AH7□1	1/33	105 (4.13)	120 (4.72)	9 (0.35)	M6×12L	4 (0.16)	8 (0.31)	7 (0.28)	3.8 (8.4)	608 (138)	
04□□AH1□1	1/5	90 (3.54)	105 (4.13)	9 (0.35)	M5×10L	3.5 (0.14)	6 (0.24)	6 (0.24)	3.6 (7.9)	245 (56)	235 (53)
04□□AHB□1	1/11	105 (4.13)	120 (4.72)	9 (0.35)	M6×12L	4 (0.16)	8 (0.31)	7 (0.28)	4.3 (9.5)	441 (100)	294 (67)
04□□AHC□1	1/21	120 (4.72)	135 (5.31)	11 (0.43)	M8×16L	5 (0.20)	10 (0.39)	8 (0.31)	4.7 (10.4)	568 (129)	314 (71)
04□□AH7□1	1/33	120 (4.72)	135 (5.31)	11 (0.43)	M8×16L	5 (0.20)	10 (0.39)	8 (0.31)	7.1 (15.7)	657 (149)	
08□□AH1□1	1/5	105 (4.13)	120 (4.72)	9 (0.35)	M6×12L	4 (0.16)	8 (0.31)	7 (0.28)	5.8 (12.8)	343 (78)	294 (67)
08□□AHB□1	1/11	120 (4.72)	135 (5.31)	11 (0.43)	M8×16L	5 (0.20)	10 (0.39)	8 (0.31)	6.6 (14.6)	451 (102)	314 (71)
08□□AHC□1	1/21	145 (5.71)	165 (6.50)	14 (0.55)	M10×20L	5 (0.20)	12 (0.47)	8 (0.31)	9.9 (21.8)	813 (184)	490 (111)
08□□AH7□1	1/33	145 (5.71)	165 (6.50)	14 (0.55)	M10×20L	5 (0.20)	12 (0.47)	8 (0.31)	9.9 (21.8)	921 (209)	

INFO

1. The dimensions for L and LL of a servomotor incorporating an encoder with super-capacitor (model: SGMAH□□□4) are as shown below.
   SGMAH-02 and 04: L-dimension + 8.2 mm (0.32 in), LL-dimension +8.2 mm (0.32 in)
   SGMAH-08: L-dimension + 0 mm, LL-dimension +0 mm
2. The working point of the SGMAH servomotor radial load is at the position of minus 5 mm from the shaft end.

- Dimensional Tolerances

Units: mm (in)

Model SGMAH-	Flange Face Dimensions	Shaft-end Dimensions
	LB	S
02□□AH1□1	$85^{0}_{-0.035}\left(3.35^{0}_{-0.0014}\right)$	$20^{0}_{-0.021}\left(0.79^{0}_{-0.0008}\right)$
02□□AHB□1	$85^{0}_{-0.035}\left(3.35^{0}_{-0.0014}\right)$	$20^{0}_{-0.021}\left(0.79^{0}_{-0.0008}\right)$
02□□AHC□1	$100^{0}_{-0.035}\left(3.94^{0}_{-0.0014}\right)$	$25^{0}_{-0.021}\left(0.98^{0}_{-0.0008}\right)$
02□□AH7□1	$100^{0}_{-0.035}\left(3.94^{0}_{-0.0014}\right)$	$25^{0}_{-0.021}\left(0.98^{0}_{-0.0008}\right)$
04□□AH1□1	$85^{0}_{-0.035}\left(3.35^{0}_{-0.0014}\right)$	$20^{0}_{-0.021}\left(0.79^{0}_{-0.0008}\right)$
04□□AHB□1	$100^{0}_{-0.035}\left(3.94^{0}_{-0.0014}\right)$	$25^{0}_{-0.021}\left(0.98^{0}_{-0.0008}\right)$
04□□AHC□1	$115^{0}_{-0.035}\left(4.53^{0}_{-0.0014}\right)$	$32^{0}_{-0.025}\left(1.26^{0}_{-0.0010}\right)$
04□□AH7□1	$115^{0}_{-0.035}\left(4.53^{0}_{-0.0014}\right)$	$32^{0}_{-0.025}\left(1.26^{0}_{-0.0010}\right)$
08□□AH1□1	$100^{0}_{-0.035}\left(3.94^{0}_{-0.0014}\right)$	$25^{0}_{-0.021}\left(0.98^{0}_{-0.0008}\right)$
08□□AHB□1	$115^{0}_{-0.035}\left(4.53^{0}_{-0.0014}\right)$	$32^{0}_{-0.025}\left(1.26^{0}_{-0.0010}\right)$
08□□AHC□1	$140^{0}_{-0.040}\left(5.51^{0}_{-0.0016}\right)$	$40^{0}_{-0.025}\left(1.57^{0}_{-0.0010}\right)$
08□□AH7□1	$140^{0}_{-0.040}\left(5.51^{0}_{-0.0016}\right)$	$40^{0}_{-0.025}\left(1.57^{0}_{-0.0010}\right)$

(3) 300 W, 650 W

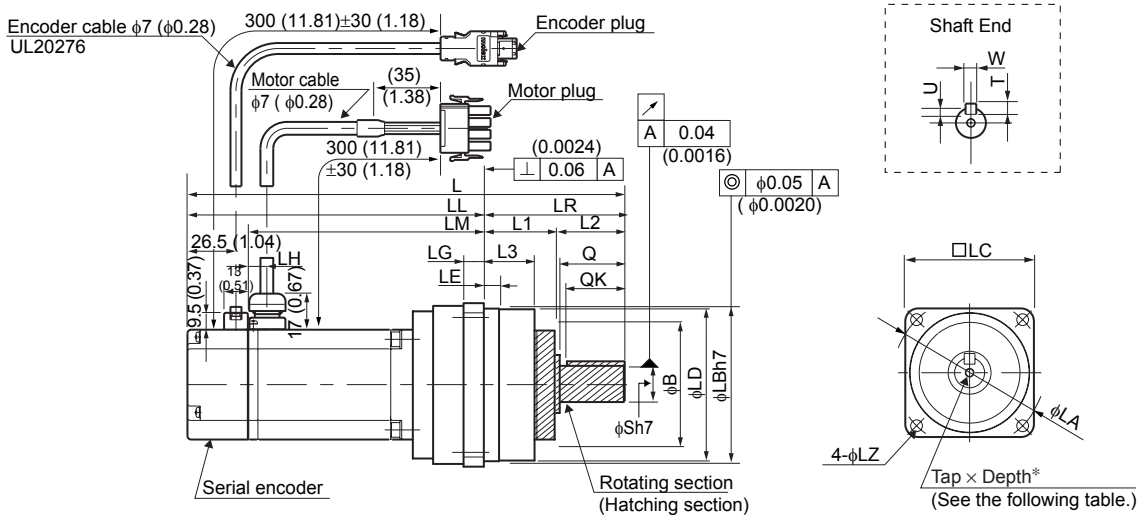

Units: mm (in)

Model SGMAH-	Gear Ratio	L	LL	LM	LR	LE	LG	B	LD	LB	L1	L2	L3	Q	QK	S
03D□AH1□1	1/5	236.5 (9.31)	162.5 (6.40)	129 (5.08)	74 (2.91)	7.5 (0.30)	10 (0.39)	59 (2.32)	84 (3.31)	85 (3.35)	36 (1.42)	38 (1.50)	26 (1.02)	36 (1.42)	32 (1.26)	20 (0.79)
03D□AHB□1	1/11	271.5 (10.69)	187.5 (7.38)	154 (6.06)	84 (3.31)	12 (0.47)	12 (0.47)	59 (2.32)	96 (3.78)	100 (3.94)	40 (1.57)	44 (1.73)	29 (1.14)	42 (1.65)	36 (1.42)	25 (0.98)
03D□AHC□1	1/21	300.5 (11.83)	195.5 (7.70)	162 (6.38)	105 (4.13)	14 (0.55)	13 (0.51)	59 (2.32)	112 (4.41)	115 (4.53)	45 (1.77)	60 (2.36)	33 (1.30)	58 (2.28)	50 (1.97)	32 (1.26)
03D□AH7□1	1/33	300.5 (11.83)	195.5 (7.70)	162 (6.38)	105 (4.13)	12.5 (0.49)	13 (0.51)	84 (3.31)	114 (4.49)	115 (4.53)	45 (1.77)	60 (2.36)	33 (1.30)	58 (2.28)	50 (1.97)	32 (1.26)
07D□AH1□1	1/5	271 (10.67)	187 (7.36)	153.5 (6.04)	84 (3.31)	12 (0.47)	12 (0.47)	59 (2.32)	96 (3.78)	100 (3.94)	40 (1.57)	44 (1.73)	29 (1.14)	42 (1.65)	36 (1.42)	25 (0.98)
07D□AHB□1	1/11	321 (12.64)	216 (8.50)	182.5 (7.19)	105 (4.13)	14 (0.55)	13 (0.51)	59 (2.32)	112 (4.41)	115 (4.53)	45 (1.77)	60 (2.36)	33 (1.30)	58 (2.28)	50 (1.97)	32 (1.26)
07D□AHC□1	1/21	365 (14.37)	223 (8.78)	189.5 (7.46)	142 (5.59)	10 (0.39)	15 (0.59)	84 (3.31)	134 (5.28)	140 (5.51)	57 (2.24)	85 (3.35)	40 (1.57)	82 (3.23)	70 (2.76)	40 (1.57)
07D□AH7□1	1/33	365 (14.37)	223 (8.78)	189.5 (7.46)	142 (5.59)	10 (0.39)	15 (0.59)	84 (3.31)	134 (5.28)	140 (5.51)	57 (2.24)	85 (3.35)	40 (1.57)	82 (3.23)	70 (2.76)	40 (1.57)

INFO

1. The dimensions for L and LL of a servomotor incorporating an encoder with super-capacitor (model: SGMAH-□□□4) are as shown below.
   SGMAH-03: L-dimension + 8.2 mm (0.32 in), LL-dimension +8.2 mm (0.32 in)
   SGMAH-07: L-dimension + 0 mm, LL-dimension +0 mm
2. The working point of the SGMAH servomotor radial load is at the position of minus 5 mm from the shaft end.

3.11.5 SGMAH Servomotors (3000 min^{-1}) With Low-backlash Gears

Units: mm (in)

Model SGMAH-	Gear Ratio	LC	LA	LZ	LH	Tap×Depth *	U	W	T	Approx. Mass kg (lb)	Allowable Radial Load N (lbf)	Allowable Thrust Load N (lbf)
03D□AH1□1	1/5	90 (3.54)	105 (4.13)	9 (0.35)	7 (0.28)	M5×10L	3.5 (0.14)	6 (0.24)	6 (0.24)	3.6 (7.9)	245 (56)	235 (53)
03D□AHB□1	1/11	105 (4.13)	120 (4.72)	9 (0.35)		M6×12L	4 (0.16)	8 (0.31)	7 (0.28)	4.3 (9.5)	441 (100)	294 (67)
03D□AHC□1	1/21	120 (4.72)	135 (5.31)	11 (0.43)		M8×16L	5 (0.20)	10 (0.39)	8 (0.31)	4.7 (10.4)	568 (129)	314 (71)
03D□AH7□1	1/33	120 (4.72)	135 (5.31)	11 (0.43)		M8×16L	5 (0.20)	10 (0.39)	8 (0.31)	7.1 (15.7)	657 (149)	
07D□AH1□1	1/5	105 (4.13)	120 (4.72)	9 (0.35)	8 (0.31)	M6×12L	4 (0.16)	8 (0.31)	7 (0.28)	5.8 (12.8)	343 (78)	294 (67)
07D□AHB□1	1/11	120 (4.72)	135 (5.31)	11 (0.43)		M8×16L	5 (0.20)	10 (0.39)	8 (0.31)	6.6 (14.6)	451 (102)	314 (71)
07D□AHC□1	1/21	145 (5.71)	165 (6.50)	14 (0.55)		M10×20L	5 (0.20)	12 (0.47)	8 (0.31)	9.9 (21.8)	813 (184)	490 (111)
07D□AH7□1	1/33	145 (5.71)	165 (6.50)	14 (0.55)		M10×20L	5 (0.20)	12 (0.47)	8 (0.31)	9.9 (21.8)	921 (209)	

- Dimensional Tolerances

Units: mm (in)

Model SGMAH-	Flange Face Dimensions	Shaft-end Dimensions
	LB	S
03D□AH1□1	$85^{0}_{-0.035}\left(3.35^{0}_{-0.0014}\right)$	$20^{0}_{-0.021}\left(0.79^{0}_{-0.0008}\right)$
03D□AHB□1	$100^{0}_{-0.035}\left(3.94^{0}_{-0.0014}\right)$	$25^{0}_{-0.021}\left(0.98^{0}_{-0.0008}\right)$
03D□AHC□1	$115^{0}_{-0.035}\left(4.53^{0}_{-0.0014}\right)$	$32^{0}_{-0.025}\left(1.26^{0}_{-0.0010}\right)$
03D□AH7□1	$115^{0}_{-0.035}\left(4.53^{0}_{-0.0014}\right)$	$32^{0}_{-0.025}\left(1.26^{0}_{-0.0010}\right)$
07D□AH1□1	$100^{0}_{-0.035}\left(3.94^{0}_{-0.0014}\right)$	$25^{0}_{-0.021}\left(0.98^{0}_{-0.0008}\right)$
07D□AHB□1	$115^{0}_{-0.035}\left(4.53^{0}_{-0.0014}\right)$	$32^{0}_{-0.025}\left(1.26^{0}_{-0.0010}\right)$
07D□AHC□1	$140^{0}_{-0.040}\left(5.51^{0}_{-0.0016}\right)$	$40^{0}_{-0.025}\left(1.57^{0}_{-0.0010}\right)$
07D□AH7□1	$140^{0}_{-0.040}\left(5.51^{0}_{-0.0016}\right)$	$40^{0}_{-0.025}\left(1.57^{0}_{-0.0010}\right)$

3.12 Dimensional Drawings of SGMPH Servomotors (3000 min^{-1})

3.12.1 SGMPH Servomotors (3000 min^{-1}) Without Gears and Brake

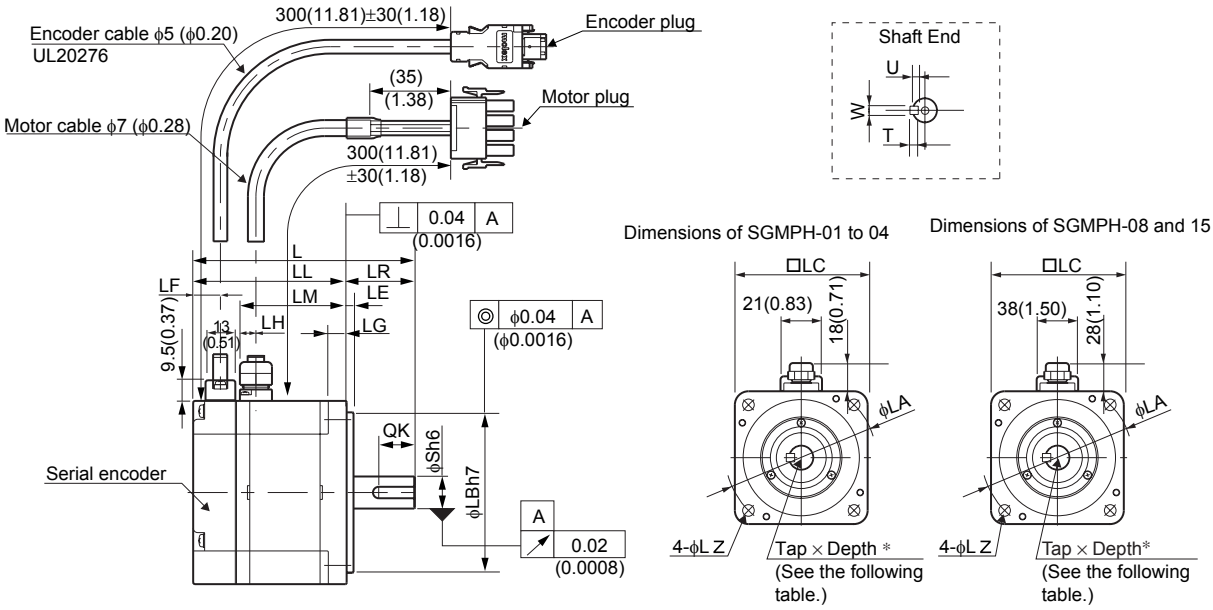

Units: mm (in)

Model SGMPH-	L	LL	LM	LR	LE	LG	LF	S	LB	LH	Tap×Depth *
01□□□21	87 (3.43)	62 (2.44)	42.5 (1.67)	25 (0.98)	3 (0.12)	6 (0.24)	12.5 (0.49)	8 (0.31)	50 (1.97)	10.55 (0.42)	No tap
01□□□41											
01□□□61											M3×6L
02□□□21	97 (3.82)	67 (2.64)	48.1 (1.89)	30 (1.18)	3 (0.12)	8 (0.31)	11.9 (0.47)	14 (0.55)	70 (2.76)	8.25 (0.32)	No tap
02□□□41											
02□□□61											M5×8L
04□□□21	117 (4.61)	87 (3.43)	68.1 (2.68)	30 (1.18)	3 (0.12)	8 (0.31)	11.9 (0.47)	14 (0.55)	70 (2.76)	8.25 (0.32)	No tap
04□□□41											
04□□□61											M5×8L
08□□□21	126.5 (4.98)	86.5 (3.41)	66.7 (2.63)	40 (1.57)	3.5 (0.14)	10 (0.39)	12.8 (0.50)	16 (0.63)	110 (4.33)	10.5 (0.41)	No tap
08□□□41											
08□□□61											M5×8L
15□□□21	154.5 (6.08)	114.5 (4.51)	94.7 (3.73)	40 (1.57)	3.5 (0.14)	10 (0.39)	12.8 (0.50)	19 (0.75)	110 (4.33)	10.5 (0.41)	No tap
15□□□41											
15□□□61											M6×10L

INFO

1. The dimensions for L and LL of a servomotor incorporating an encoder with super-capacitor (model: SGMPH-□□□4) are as shown below.
   SGMPH-01, 02, and 04: L-dimension + 6.4 mm (0.25 in), LL-dimension +6.4 mm (0.25 in)
   SGMPH-08 and 15: L-dimension + 6.0 mm (0.24 in), LL-dimension +6.0 mm (0.24 in)
2. The working point of the SGMPH servomotor radial load is at the position of minus 5 mm from the shaft end.

3.12.1 SGMPH Servomotors (3000 min^{-1}) Without Gears and Brake

Units: mm (in)

Model SGMPH-	LC	LA	LZ	QK	U	W	T	Approx. Mass kg (lb)	Allowable Radial Load N (lbf)	Allowable Thrust Load N (lbf)
01□□□21	60 (2.36)	70 (2.76)	5.5 (0.22)	No key				0.7 (1.5)	78 (18)	49 (11)
01□□□41				14 (0.55)	1.8 (0.071)	3 (0.12)	3 (0.12)			
01□□□61										
02□□□21	80 (3.15)	90 (3.54)	7 (0.28)	No key				1.4 (3.1)	245 (55)	68 (15)
02□□□41				16 (0.63)	3 (0.12)	5 (0.20)	5 (0.20)			
02□□□61										
04□□□21	80 (3.15)	90 (3.54)	7 (0.28)	No key				2.1 (4.6)		
04□□□41				16 (0.63)	3 (0.12)	5 (0.20)	5 (0.20)			
04□□□61										
08□□□21	120 (4.72)	145 (5.71)	10 (0.39)	No key				4.2 (9.3)	392 (88)	147 (33)
08□□□41				22 (0.87)	3 (0.12)	5 (0.20)	5 (0.20)			
08□□□61										
15□□□21	120 (4.72)	145 (5.71)	10 (0.39)	No key				6.6 (14.6)	490 (110)	
15□□□41				22 (0.87)	3.5 (0.14)	6 (0.24)	6 (0.24)			
15□□□61										

- Dimensional Tolerances

Units: mm (in)

Model SGMPH-	Shaft-end Dimensions	Flange Face Dimensions
	S	LB
01□□□21	$8^{0}_{-0.009}\left(0.315^{-0.0001}_{-0.0003}\right)$	$50^{0}_{-0.025}\left(1.97^{-0.0015}_{-0.0025}\right)$
01□□□41		
01□□□61		
02□□□21	$14^{0}_{-0.011}\left(0.551^{+0.0001}_{-0.0002}\right)$	$70^{0}_{-0.030}\left(2.756^{-0.0001}_{-0.0013}\right)$
02□□□41		
02□□□61		
04□□□21	$14^{0}_{-0.011}\left(0.551^{+0.0001}_{-0.0002}\right)$	$70^{0}_{-0.030}\left(2.756^{-0.0001}_{-0.0013}\right)$
04□□□41		
04□□□61		
08□□□21	$16^{0}_{-0.011}\left(0.63^{-0.0001}_{-0.0005}\right)$	$110^{0}_{-0.035}\left(4.33^{+0.0007}_{-0.0007}\right)$
08□□□41		
08□□□61		
15□□□21	$19^{0}_{-0.013}\left(0.75^{-0.0020}_{-0.0024}\right)$	$110^{0}_{-0.035}\left(4.33^{+0.0007}_{-0.0007}\right)$
15□□□41		
15□□□61		

3.12.2 SGMPH Servomotors (3000 min^{-1}) With Brakes

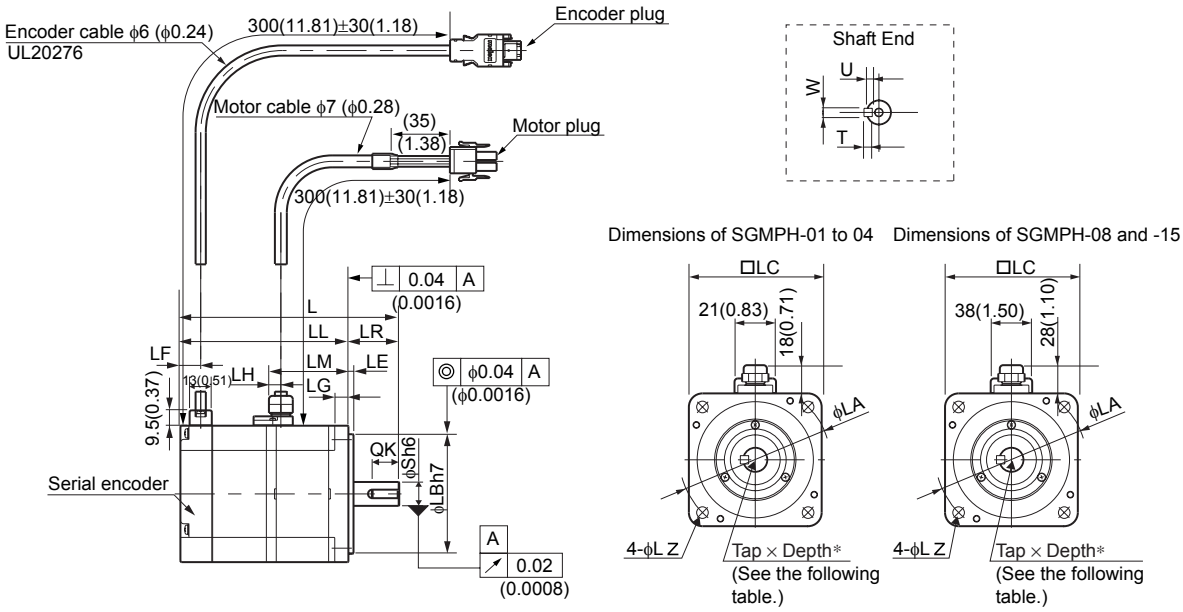

Units: mm (in)

Model SGMPH-	L	LL	LM	LR	LE	LG	LF	S	LB	LH	Tap× Depth*
01□□□2□	116 (4.57)	91 (3.58)	42.5 (1.67)	25 (0.98)	3 (0.12)	6 (0.24)	12.5 (0.49)	8 (0.31)	50 (1.97)	10.55 (0.42)	No tap
01□□□4□											
01□□□6□											M3×6L
02□□□2□	128.5 (5.06)	98.5 (3.88)	48.1 (1.89)	30 (1.18)	3 (0.12)	8 (0.31)	11.9 (0.47)	14 (0.55)	70 (2.76)	8.25 (0.32)	No tap
02□□□4□											
02□□□6□											M5×8L
04□□□2□	148.5 (5.85)	118.5 (4.67)	68.1 (2.68)	30 (1.18)	3 (0.12)	8 (0.31)	11.9 (0.47)	14 (0.55)	70 (2.76)	8.25 (0.32)	No tap
04□□□4□											
04□□□6□											M5×8L
08□□□2□	160 (6.30)	120 (4.72)	66.7 (2.63)	40 (1.57)	3.5 (0.14)	10 (0.39)	12.8 (0.50)	16 (0.63)	110 (4.33)	10.5 (0.41)	No tap
08□□□4□											
08□□□6□											M5×8L
15□□□2□	188 (7.40)	148 (5.83)	94.7 (3.73)	40 (1.57)	3.5 (0.14)	10 (0.39)	12.8 (0.50)	19 (0.75)	110 (4.33)	10.5 (0.41)	No tap
15□□□4□											
15□□□6□											M6×10L

INFO

1. The dimensions for L and LL of a servomotor incorporating an encoder with super-capacitor (model: SGMPH-□□□4) are as shown below.
   SGMPH-01, 02, and 04: L-dimension + 6.4 mm (0.25 in), LL-dimension +6.4 mm (0.25 in)
   SGMPH-08 and 15: L-dimension + 6.0 mm (0.24 in), LL-dimension +6.0 mm (0.24 in)
2. The working point of the SGMPH servomotor radial load is at the position of minus 5 mm from the shaft end.

3.12.2 SGMPH Servomotors (3000 min^{-1}) With Brakes

Units: mm (in)

Model SGMPH-	LC	LA	LZ	QK	U	W	T	Approx. Mass kg (lb)	Allowable Radial Load N (lbf)	Allowable Thrust Load N (lbf)
01□□□2□	60 (2.36)	70 (2.76)	5.5 (0.22)	No key				0.9 (2.0)	78 (18)	49 (11)
01□□□4□				14 (0.55)	1.8 (0.071)	3 (0.12)	3 (0.12)			
01□□□6□										
02□□□2□	80 (3.15)	90 (3.54)	7 (0.28)	No key				1.9 (4.2)	245 (55)	68 (15)
02□□□4□				16 (0.63)	3 (0.12)	5 (0.20)	5 (0.20)			
02□□□6□										
04□□□2□	80 (3.15)	90 (3.54)	7 (0.28)	No key				2.6 (5.7)		
04□□□4□				16 (0.63)	3 (0.12)	5 (0.20)	5 (0.20)			
04□□□6□										
08□□□2□	120 (4.72)	145 (5.71)	10 (0.39)	No key				5.7 (12.6)	392 (88)	147 (33)
08□□□4□				22 (0.87)	3 (0.12)	5 (0.20)	5 (0.20)			
08□□□6□										
15□□□2□	120 (4.72)	145 (5.71)	10 (0.39)	No key				8.1 (17.8)	490 (110)	
15□□□4□				22 (0.87)	3.5 (0.14)	6 (0.24)	6 (0.24)			
15□□□6□										

- Dimensional Tolerances

Units: mm (in)

Model SGMPH-	Shaft-end Dimensions	Flange Face Dimensions
	S	LB
01□□□2□	$8^{0}_{-0.009}\left(0.315^{-0.0001}_{-0.0003}\right)$	$50^{0}_{-0.025}\left(1.97^{-0.0015}_{-0.0025}\right)$
01□□□4□		
01□□□6□		
02□□□2□	$14^{0}_{-0.011}\left(0.551^{+0.0001}_{-0.0002}\right)$	$70^{0}_{-0.030}\left(2.756^{-0.0001}_{-0.0013}\right)$
02□□□4□		
02□□□6□		
04□□□2□	$14^{0}_{-0.011}\left(0.551^{+0.0001}_{-0.0002}\right)$	$70^{0}_{-0.030}\left(2.756^{-0.0001}_{-0.0013}\right)$
04□□□4□		
04□□□6□		
08□□□2□	$16^{0}_{-0.011}\left(0.63^{-0.0001}_{-0.0005}\right)$	$110^{0}_{-0.035}\left(4.33^{+0.0007}_{-0.0007}\right)$
08□□□4□		
08□□□6□		
15□□□2□	$19^{0}_{-0.013}\left(0.75^{-0.0020}_{-0.0024}\right)$	$110^{0}_{-0.035}\left(4.33^{+0.0007}_{-0.0007}\right)$
15□□□4□		
15□□□6□		

3.12.3 SGMPH Servomotors (3000 min^{-1}) With Standard Backlash Gears

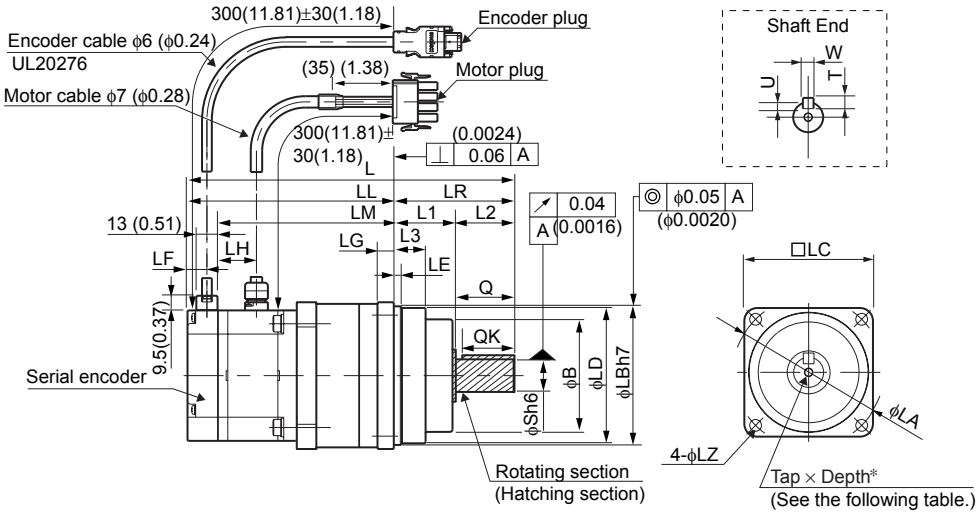

Units: mm (in)

Model SGMPH-	Gear Ratio	L	LL	LM	LR	LE	LG	B	LD	LB	L1	L2	L3	Q	QK	S
01□□AJ1□1	1/5	177 (6.97)	117 (4.61)	97.5 (3.84)	60 (2.36)	4 (0.16)	9 (0.35)	57 (2.24)	63 (2.48)	65 (2.56)	30 (1.18)	30 (1.18)	14.5 (0.57)	28 (1.10)	25 (0.98)	16 (0.63)
01□□AJ3□1	3/31	177 (6.97)	117 (4.61)	97.5 (3.84)	60 (2.36)	4 (0.16)	9 (0.35)	57 (2.24)	63 (2.48)	65 (2.56)	30 (1.18)	30 (1.18)	14.5 (0.57)	28 (1.10)	25 (0.98)	16 (0.63)
01□□AJC□1	1/21	196 (7.72)	122 (4.80)	102 (4.02)	74 (2.91)	4 (0.16)	10 (0.39)	69 (2.72)	83 (3.27)	85 (3.35)	36 (1.42)	38 (1.50)	19.5 (0.77)	36 (1.42)	32 (1.26)	20 (0.79)
01□□AJ7□1	1/33	196 (7.72)	122 (4.80)	102 (4.02)	74 (2.91)	4 (0.16)	10 (0.39)	69 (2.72)	83 (3.27)	85 (3.35)	36 (1.42)	38 (1.50)	19.5 (0.77)	36 (1.42)	32 (1.26)	20 (0.79)
02□□AJ1□1	1/5	200.5 (7.89)	126.5 (4.98)	107.6 (4.24)	74 (2.91)	4 (0.16)	10 (0.39)	69 (2.72)	83 (3.27)	85 (3.35)	36 (1.42)	38 (1.50)	19.5 (0.77)	36 (1.42)	32 (1.26)	20 (0.79)
02□□AJ3□1	3/31	200.5 (7.89)	126.5 (4.98)	107.6 (4.24)	74 (2.91)	4 (0.16)	10 (0.39)	69 (2.72)	83 (3.27)	85 (3.35)	36 (1.42)	38 (1.50)	19.5 (0.77)	36 (1.42)	32 (1.26)	20 (0.79)
02□□AJC□1	1/21	221 (8.70)	137 (5.39)	118.1 (4.65)	84 (3.31)	4 (0.16)	12 (0.47)	82 (3.23)	98 (3.86)	100 (3.94)	40 (1.57)	44 (1.73)	23 (0.91)	42 (1.65)	36 (1.42)	25 (0.98)
02□□AJ7□1	1/33	221 (8.70)	137 (5.39)	118.1 (4.65)	84 (3.31)	4 (0.16)	12 (0.47)	82 (3.23)	98 (3.86)	100 (3.94)	40 (1.57)	44 (1.73)	23 (0.91)	42 (1.65)	36 (1.42)	25 (0.98)
04□□AJ1□1	1/5	220.5 (8.68)	146.5 (5.77)	127.6 (5.02)	74 (2.91)	4 (0.16)	10 (0.39)	69 (2.72	83 (3.27)	85 (3.35)	36 (1.42)	38 (1.50)	19.5 (0.77)	36 (1.42)	32 (1.26)	20 (0.79)
04□□AJ3□1	3/31	241 (9.49)	157 (6.18)	138.1 (5.44)	84 (3.31)	4 (0.16)	12 (0.47)	82 (3.23)	98 (3.86)	100 (3.94)	40 (1.57)	44 (1.73)	23 (0.91)	42 (1.65)	36 (1.42)	25 (0.98)
04□□AJC□1	1/21	269 (10.59)	164 (6.46)	145.1 (5.71)	105 (4.13)	5 (0.20)	13 (0.51)	93 (3.66)	112 (4.41)	115 (4.53)	45 (1.77)	60 (2.36)	26.5 (1.04)	58 (2.28)	50 (1.97)	32 (1.26)
04□□AJ7□1	1/33	269 (10.59)	164 (6.46)	145.1 (5.71)	105 (4.13)	5 (0.20)	13 (0.51)	93 (3.66)	112 (4.41)	115 (4.53)	45 (1.77)	60 (2.36)	26.5 (1.04)	58 (2.28)	50 (1.97)	32 (1.26)
08□□AJ1□1	1/5	240.5 (9.47)	156.5 (6.16)	136.7 (5.38)	84 (3.31)	4 (0.16)	12 (0.47)	82 (3.23)	98 (3.86)	100 (3.94)	40 (1.57)	44 (1.73)	23 (0.91)	42 (1.65)	36 (1.42)	25 (0.98)
08□□AJ3□1	3/31	268.5 (10.57)	163.5 (6.44)	143.7 (5.66)	105 (4.13)	5 (0.20)	13 (0.51)	93 (3.66)	112 (4.41)	115 (4.53)	45 (1.77)	60 (2.36)	26.5 (1.04)	58 (2.28)	50 (1.97)	32 (1.26)
08□□AJC□1	1/21	281.5 (11.08)	174.5 (6.87)	154.7 (6.09)	107 (4.21)	10 (0.39)	15 (0.59)	107 (4.21)	134 (5.28)	140 (5.51)	44 (1.73)	63 (2.48)	42 (1.65)	60 (2.36)	45 (1.77)	40 (1.57)
08□□AJ7□1	1/33	281.5 (11.08)	174.5 (6.87)	154.7 (6.09)	107 (4.21)	10 (0.39)	15 (0.59)	107 (4.21)	134 (5.28)	140 (5.51)	44 (1.73)	63 (2.48)	42 (1.65)	60 (2.36)	45 (1.77)	40 (1.57)
15□□AJ1□1	1/5	296.5 (11.67)	191.5 (7.54)	171.7 (6.76)	105 (4.13)	5 (0.20)	13 (0.51)	93 (3.66)	112 (4.41)	115 (4.53)	45 (1.77)	60 (2.36)	26.5 (1.04)	58 (2.28)	50 (1.97)	32 (1.26)
15□□AJ3□1	1/11	309.5 (12.19)	202.5 (7.97)	182.7 (7.19)	107 (4.21)	10 (0.39)	15 (0.59)	107 (4.21)	134 (5.28)	140 (5.51)	44 (1.73)	63 (2.48)	42 (1.65)	60 (2.36)	45 (1.77)	40 (1.57)
15□□AJC□1	1/21	325.5 (12.81)	208.5 (8.21)	188.7 (7.43)	117 (4.61)	16 (0.63)	16 (0.63)	135 (5.31)	163 (6.42)	165 (6.50)	53 (2.09)	64 (2.52)	51 (2.01)	60 (2.36)	45 (1.77)	45 (1.77)
15□□AJ7□1	1/33	325.5 (12.81)	208.5 (8.21)	188.7 (7.43)	117 (4.61)	16 (0.63)	16 (0.63)	135 (5.31)	163 (6.42)	165 (6.50)	53 (2.09)	64 (2.52)	51 (2.01)	60 (2.36)	45 (1.77)	45 (1.77)

3.12.3 SGMPH Servomotors (3000 min^{-1}) With Standard Backlash Gears

INFO

1. The dimensions for L and LL of a servomotor incorporating an encoder with super-capacitor (model: SGMPH-□□□4) are as shown below.
   SGMPH-01, 02, and 04: L-dimension + 6.4 mm (0.25 in), LL-dimension +6.4 mm (0.25 in)
   SGMPH-08 and 15: L-dimension + 6.0 mm (0.24 in), LL-dimension +6.0 mm (0.24 in)
2. The working point of the SGMPH servomotor radial load is at the position of minus 5 mm from the shaft end.

Units: mm (in)

Model SGMPH-	Gear Ratio	LC	LA	LF	LZ	LH	Tap×Depth	U	W	T	Approx. Mass kg (lb)	Allowable Radial Load N (lbf)	Allowable Thrust Load N (lbf)
01□□AJ1□1	1/5	70	80	12.5	6.6	10.55	M4 × 8L	3	5	5	1.6 (3.5)	175 (39)	145 (33)
01□□AJ3□1	3/31	70	80	12.5	6.6	10.55	M4 × 8L	3	5	5	1.6 (3.5)	215 (48)	
01□□AJC□1	1/21	90	105	12.5	9	10.55	M5 × 10L	3.5	6	6	2.6 (5.7)	455 (102)	235 (53)
01□□AJ7□1	1/33	90	105	12.5	9	10.55	M5 × 10L	3.5	6	6	2.6 (5.7)	480 (108)	
02□□AJ1□1	1/5	90	105	11.9	9	8.25	M5 × 10L	3.5	6	6	3.4 (7.5)	275 (62)	235 (53)
02□□AJ3□1	3/31	90	105	11.9	9	8.25	M5 × 10L	3.5	6	6	3.4 (7.5)	360 (81)	
02□□AJC□1	1/21	105	120	11.9	9	8.25	M6 × 12L	4	8	7	4.7 (10.4)	585 (132)	290 (65)
02□□AJ7□1	1/33	105	120	11.9	9	8.25	M6 × 12L	4	8	7	4.7 (10.4)	635 (143)	
04□□AJ1□1	1/5	90	105	11.9	9	8.25	M5 × 10L	3.5	6	6	4.1 (9.0)	275 (62)	235 (53)
04□□AJ3□1	3/31	105	120	11.9	9	8.25	M6 × 12L	4	8	7	5.1 (11.2)	460 (104)	290 (65)
04□□AJC□1	1/21	120	135	11.9	11	8.25	M8 × 16L	5	10	8	6.9 (15.2)	655 (147)	310 (70)
04□□AJ7□1	1/33	120	135	11.9	11	8.25	M8 × 16L	5	10	8	6.9 (15.2)	755 (170)	
08□□AJ1□1	1/5	105	120	12.8	9	10.5	M6 × 12L	4	8	7	7.5 (16.5)	355 (80)	290 (65)
08□□AJ3□1	3/31	120	135	12.8	11	10.5	M8 × 16L	5	10	8	9.0 (19.8)	525 (118)	310 (70)
08□□AJC□1	1/21	145	165	12.8	14	10.5	M10 × 20L	5	12	8	14.2 (31.3)	1070 (241)	490 (110)
08□□AJ7□1	1/33	145	165	12.8	14	10.5	M10 × 20L	5	12	8	14.2 (31.3)	1205 (271)	
15□□AJ1□1	1/5	120	135	12.8	11	10.5	M8 × 16L	5	10	8	11.4 (25.1)	400 (90)	310 (70)
15□□AJ3□1	1/11	145	165	12.8	14	10.5	M10 × 20L	5	12	8	16.6 (36.6)	860 (194)	490 (110)
15□□AJC□1	1/21	170	190	12.8	14	10.5	M10 × 20L	5.5	14	9	21.6 (47.6)	1690 (380)	880 (198)
15□□AJ7□1	1/33	170	190	12.8	14	10.5	M10 × 20L	5.5	14	9	21.6 (47.6)		

- Dimensional Tolerances

Units: mm (in)

Model SGMPH-	Flange Face Dimensions	Shaft-end Dimensions
	LB	S
01□□AJ1□1	$65^{0}_{-0.030}\left(2.56^{0}_{-0.0012}\right)$	$16^{0}_{-0.018}\left(0.63^{0}_{-0.0004}\right)$
01□□AJ3□1	$65^{0}_{-0.030}\left(2.56^{0}_{-0.0012}\right)$	$16^{0}_{-0.018}\left(0.63^{0}_{-0.0004}\right)$
01□□AJC□1	$85^{0}_{-0.035}\left(3.35^{0}_{-0.0014}\right)$	$20^{0}_{-0.021}\left(0.79^{0}_{-0.0005}\right)$
01□□AJ7□1	$85^{0}_{-0.035}\left(3.35^{0}_{-0.0014}\right)$	$20^{0}_{-0.021}\left(0.79^{0}_{-0.0005}\right)$
02□□AJ1□1	$85^{0}_{-0.035}\left(3.35^{0}_{-0.0014}\right)$	$20^{0}_{-0.021}\left(0.79^{0}_{-0.0005}\right)$
02□□AJ3□1	$85^{0}_{-0.035}\left(3.35^{0}_{-0.0014}\right)$	$20^{0}_{-0.021}\left(0.79^{0}_{-0.0005}\right)$
02□□AJC□1	$100^{0}_{-0.035}\left(3.94^{0}_{-0.0014}\right)$	$25^{0}_{-0.021}\left(0.98^{0}_{-0.0005}\right)$
02□□AJ7□1	$100^{0}_{-0.035}\left(3.94^{0}_{-0.0014}\right)$	$25^{0}_{-0.021}\left(0.98^{0}_{-0.0005}\right)$
04□□AJ1□1	$85^{0}_{-0.035}\left(3.35^{0}_{-0.0014}\right)$	$20^{0}_{-0.021}\left(0.79^{0}_{-0.0005}\right)$
04□□AJ3□1	$100^{0}_{-0.035}\left(3.94^{0}_{-0.0014}\right)$	$25^{0}_{-0.021}\left(0.98^{0}_{-0.0005}\right)$
04□□AJC□1	$115^{0}_{-0.035}\left(4.53^{0}_{-0.0014}\right)$	$32^{0}_{-0.025}\left(1.26^{0}_{-0.0006}\right)$
04□□AJ7□1	$115^{0}_{-0.035}\left(4.53^{0}_{-0.0014}\right)$	$32^{0}_{-0.025}\left(1.26^{0}_{-0.0006}\right)$
08□□AJ1□1	$100^{0}_{-0.035}\left(3.94^{0}_{-0.0014}\right)$	$25^{0}_{-0.021}\left(0.98^{0}_{-0.0005}\right)$
08□□AJ3□1	$115^{0}_{-0.035}\left(4.53^{0}_{-0.0014}\right)$	$32^{0}_{-0.025}\left(1.26^{0}_{-0.0006}\right)$
08□□AJC□1	$140^{0}_{-0.040}\left(5.51^{0}_{-0.0016}\right)$	$40^{0}_{-0.025}\left(1.57^{0}_{-0.0006}\right)$
08□□AJ7□1	$140^{0}_{-0.040}\left(5.51^{0}_{-0.0016}\right)$	$40^{0}_{-0.025}\left(1.57^{0}_{-0.0006}\right)$
15□□AJ1□1	$115^{0}_{-0.035}\left(4.53^{0}_{-0.0014}\right)$	$32^{0}_{-0.025}\left(1.26^{0}_{-0.0006}\right)$
15□□AJ3□1	$140^{0}_{-0.040}\left(5.51^{0}_{-0.0016}\right)$	$40^{0}_{-0.025}\left(1.57^{0}_{-0.0006}\right)$
15□□AJC□1	$165^{0}_{-0.040}\left(6.50^{0}_{-0.0016}\right)$	$45^{0}_{-0.025}\left(1.77^{0}_{-0.0006}\right)$
15□□AJ7□1	$165^{0}_{-0.040}\left(6.50^{0}_{-0.0016}\right)$	$45^{0}_{-0.025}\left(1.77^{0}_{-0.0006}\right)$

3.12.4 SGMPH Servomotors (3000 min^{-1}) With Standard Backlash Gears and Brakes

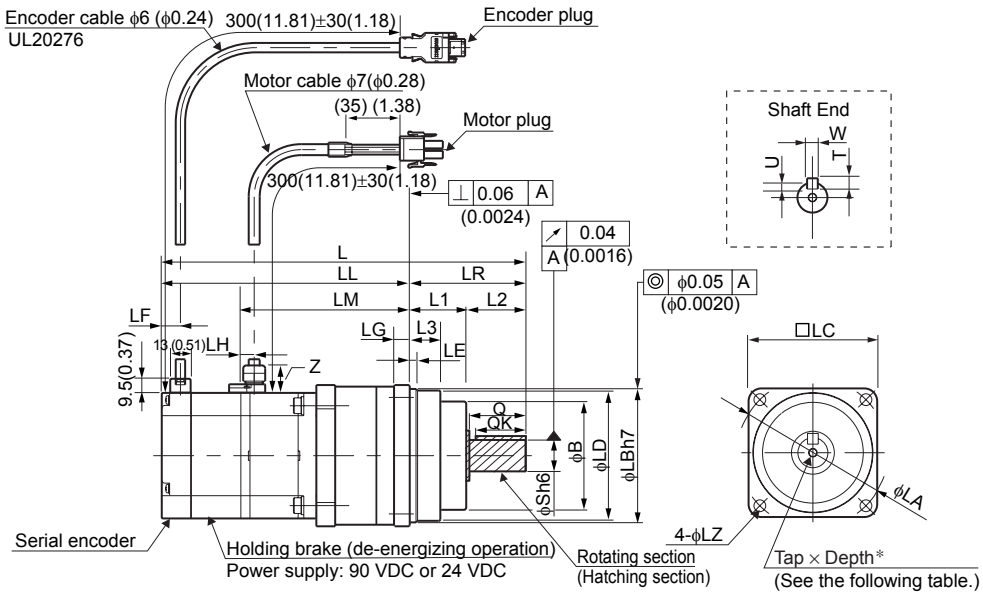

Units: mm (in)

Model SGMPH-	Gear Ratio	L	LL	LM	LR	LE	LG	B	LD	LB	L1	L2	L3	Q	QK	S	Z
01□□AJ1□□	1/5	206 (8.11)	146 (5.75)	92.5 (3.64)	60 (2.36)	4 (0.16)	9 (0.35)	57 (2.24)	63 (2.48)	65 (2.56)	30 (1.18)	30 (1.18)	14.5 (0.57)	28 (1.10)	25 (0.98)	16 (0.63)	18 (0.71)
01□□AJ3□□	3/31	206 (8.11)	146 (5.75)	92.5 (3.64)	60 (2.36)	4 (0.16)	9 (0.35)	57 (2.24)	63 (2.48)	65 (2.56)	30 (1.18)	30 (1.18)	14.5 (0.57)	28 (1.10)	25 (0.98)	16 (0.63)	
01□□AJC□□	1/21	224.5 (8.84)	150.5 (5.93)	102 (4.02)	74 (2.91)	4 (0.16)	10 (0.39)	69 (2.72)	83 (3.27)	85 (3.35)	36 (1.42)	38 (1.50)	19.5 (0.77)	36 (1.42)	32 (1.26)	20 (0.79)	
01□□AJ7□□	1/33	224.5 (8.84)	150.5 (5.93)	102 (4.02)	74 (2.91)	4 (0.16)	10 (0.39)	69 (2.72)	83 (3.27)	85 (3.35)	36 (1.42)	38 (1.50)	19.5 (0.77)	36 (1.42)	32 (1.26)	20 (0.79)	
02□□AJ1□□	1/5	232 (9.13)	158 (6.22)	107.6 (4.24)	74 (2.91)	4 (0.16)	10 (0.39)	69 (2.72)	83 (3.27)	85 (3.35)	36 (1.42)	38 (1.50)	19.5 (0.77)	36 (1.42)	32 (1.26)	20 (0.79)	
02□□AJ3□□	3/31	232 (9.13)	158 (6.22)	107.6 (4.24)	74 (2.91)	4 (0.16)	10 (0.39)	69 (2.72)	83 (3.27)	85 (3.35)	36 (1.42)	38 (1.50)	19.5 (0.77)	36 (1.42)	32 (1.26)	20 (0.79)	
02□□AJC□□	1/21	252.5 (9.94)	168.5 (6.63)	118.1 (4.65)	84 (3.31)	4 (0.16)	12 (0.47)	82 (3.23)	98 (3.86)	100 (3.94)	40 (1.57)	44 (1.73)	23 (0.91)	42 (1.65)	36 (1.42)	25 (0.98)	
02□□AJ7□□	1/33	252.5 (9.94)	168.5 (6.63)	118.1 (4.65)	84 (3.31)	4 (0.16)	12 (0.47)	82 (3.23)	98 (3.86)	100 (3.94)	40 (1.57)	44 (1.73)	23 (0.91)	42 (1.65)	36 (1.42)	25 (0.98)	
04□□AJ1□□	1/5	252 (9.92)	178 (7.01)	127.6 (5.02)	74 (2.91)	4 (0.16)	10 (0.39)	69 (2.72)	83 (3.27)	85 (3.35)	36 (1.42)	38 (1.50)	19.5 (0.77)	36 (1.42)	32 (1.26)	20 (0.79)	
04□□AJ3□□	3/31	272.5 (10.73)	188.5 (7.42)	138.1 (5.44)	84 (3.31)	4 (0.16)	12 (0.47)	82 (3.23)	98 (3.86)	100 (3.94)	40 (1.57)	44 (1.73)	23 (0.91)	42 (1.65)	36 (1.42)	25 (0.98)	
04□□AJC□□	1/21	300.5 (11.83)	195.5 (7.70)	245.1 (9.65)	105 (4.13)	5 (0.20)	13 (0.51)	93 (3.66)	112 (4.41)	115 (4.53)	45 (1.77)	60 (2.36)	26.5 (1.04)	58 (2.28)	50 (1.97)	32 (1.26)	
04□□AJ7□□	1/33	300.5 (11.83)	195.5 (7.70)	245.1 (9.65)	105 (4.13)	5 (0.20)	13 (0.51)	93 (3.66)	112 (4.41)	115 (4.53)	45 (1.77)	60 (2.36)	26.5 (1.04)	58 (2.28)	50 (1.97)	32 (1.26)	

Units: mm (in)

Model SGMPH-	Gear Ratio	L	LL	LM	LR	LE	LG	B	LD	LB	L1	L2	L3	Q	QK	S	Z
08□□AJ1□□	1/5	274 (10.79)	190 (7.48)	136.7 (5.38)	84 (3.31)	4 (0.16)	12 (0.47)	82 (3.23)	98 (3.86)	100 (3.94)	40 (1.57)	44 (1.73)	23 (0.91)	42 (1.65)	36 (1.42)	25 (0.98)	28 (1.10)
08□□AJ3□□	3/31	302 (11.89)	197 (7.76)	143.7 (5.66)	105 (4.13)	5 (0.20)	13 (0.51)	93 (3.66)	112 (4.41)	115 (4.53)	45 (1.77)	60 (2.36)	26.5 (1.04)	58 (2.28)	50 (1.97)	32 (1.26)	
08□□AJC□□	1/21	315 (12.40)	208 (8.19)	154.7 (6.09)	107 (4.21)	10 (0.39)	15 (0.59)	107 (4.21)	134 (5.28)	140 (5.51)	44 (1.73)	63 (2.48)	42 (1.65)	60 (2.36)	45 (1.77)	40 (1.57)	
08□□AJ7□□	1/33	315 (12.40)	208 (8.19)	154.7 (6.09)	107 (4.21)	10 (0.39)	15 (0.59)	107 (4.21)	134 (5.28)	140 (5.51)	44 (1.73)	63 (2.48)	42 (1.65)	60 (2.36)	45 (1.77)	40 (1.57)	
15□□AJ1□□	1/5	330 (12.99)	225 (8.86)	171.7 (6.76)	105 (4.13)	5 (0.20)	13 (0.51)	93 (3.66)	112 (4.41)	115 (4.53)	45 (1.77)	60 (2.36)	26.5 (1.04)	58 (2.28)	50 (1.97)	32 (1.26)	
15□□AJ3□□	1/11	343 (13.50)	236 (9.29)	182.7 (7.19)	107 (4.21)	10 (0.39)	15 (0.59)	107 (4.21)	134 (5.28)	140 (5.51)	44 (1.73)	63 (2.48)	42 (1.65)	60 (2.36)	45 (1.77)	40 (1.57)	
15□□AJC□□	1/21	359 (14.13)	242 (9.53)	188.7 (7.43)	117 (4.61)	17 (0.67)	16 (0.63)	135 (5.31)	163 (6.42)	165 (6.50)	53 (2.09)	64 (2.52)	51 (2.01)	60 (2.36)	45 (1.77)	45 (1.77)	
15□□AJ7□□	1/33	359 (14.13)	242 (9.53)	188.7 (7.43)	117 (4.61)	17 (0.67)	16 (0.63)	135 (5.31)	163 (6.42)	165 (6.50)	53 (2.09)	64 (2.52)	51 (2.01)	60 (2.36)	45 (1.77)	45 (1.77)	

INFO

1. The dimensions for L and LL of a servomotor incorporating an encoder with super-capacitor (model: SGMPH-□□□4) are as shown below.
   SGMPH-01, 02, and 04: L-dimension + 6.4 mm (0.25 in), LL-dimension +6.4 mm (0.25 in)
   SGMPH-08 and 15: L-dimension + 6.0 mm (0.24 in), LL-dimension +6.0 mm (0.24 in)
2. The working point of the SGMPH servomotor radial load is at the position of minus 5 mm from the shaft end.

Units: mm (in)

Model SGMPH-	Gear Ratio	LC	LA	LF	LZ	LH	Tap×Depth*	U	W	T	Approx. Mass kg (lb)	Allowable Radial Load N (lbf)	Allowable Thrust Load N (lbf)
01□□AJ1□□	1/5	70 (2.76)	80 (3.15)	12.5 (0.49)	6.6 (0.26)	10.55 (0.42)	M4 × 8L	3 (0.12)	5 (0.20)	5 (0.20)	1.8 (4.0)	175 (40)	145 (33)
01□□AJ3□□	3/31	70 (2.76)	80 (3.15)	12.5 (0.49)	6.6 (0.26)	10.55 (0.42)	M4 × 8L	3 (0.12)	5 (0.20)	5 (0.20)	1.8 (4.0)	215 (49)	
01□□AJC□□	1/21	90 (3.54)	105 (4.13)	12.5 (0.49)	9 (0.35)	10.55 (0.42)	M5 × 10L	3.5 (0.14)	6 (0.24)	6 (0.24)	2.8 (6.2)	455 (103)	235 (53)
01□□AJ7□□	1/33	90 (3.54)	105 (4.13)	12.5 (0.49)	9 (0.35)	10.55 (0.42)	M5 × 10L	3.5 (0.14)	6 (0.24)	6 (0.24)	2.8 (6.2)	480 (109)	
02□□AJ1□□	1/5	90 (3.54)	105 (4.13)	11.9 (0.47)	9 (0.35)	8.25 (0.32)	M5 × 10L	3.5 (0.14)	6 (0.24)	6 (0.24)	3.9 (8.6)	275 (62)	
02□□AJ3□□	3/31	90 (3.54)	105 (4.13)	11.9 (0.47)	9 (0.35)	8.25 (0.32)	M5 × 10L	3.5 (0.14)	6 (0.24)	6 (0.24)	3.9 (8.6)	360 (82)	
02□□AJC□□	1/21	105 (4.13)	120 (4.72)	11.9 (0.47)	9 (0.35)	8.25 (0.32)	M6 × 12L	4 (0.16)	8 (0.31)	7 (0.28)	5.2 (11.5)	585 (133)	290 (66)
02□□AJ7□□	1/33	105 (4.13)	120 (4.72)	11.9 (0.47)	9 (0.35)	8.25 (0.32)	M6 × 12L	4 (0.16)	8 (0.31)	7 (0.28)	5.2 (11.5)	635 (144)	
04□□AJ1□□	1/5	90 (3.54)	105 (4.13)	11.9 (0.47)	9 (0.35)	8.25 (0.32)	M5 × 10L	3.5 (0.14)	6 (0.24)	6 (0.24)	4.6 (10.1)	275 (62)	235 (53)
04□□AJ3□□	3/31	105 (4.13)	120 (4.72)	11.9 (0.47)	9 (0.35)	8.25 (0.32)	M6 × 12L	4 (0.16)	8 (0.31)	7 (0.28)	5.6 (12.3)	460 (104)	290 (66)
04□□AJC□□	1/21	120 (4.72)	120 (4.72)	11.9 (0.47)	11 (0.43)	8.25 (0.32)	M8 × 16L	5 (0.20)	10 (0.39)	8 (0.31)	7.4 (16.3)	655 (149)	310 (70)
04□□AJ7□□	1/33	120 (4.72)	105 (4.13)	11.9 (0.47)	11 (0.43)	8.25 (0.32)	M8 × 16L	5 (0.20)	10 (0.39)	8 (0.31)	7.4 (16.3)	755 (171)	

3.12.4 SGMPH Servomotors (3000 min^{-1}) With Standard Backlash Gears and Brakes

Units: mm (in)

Model SGMPH-	Gear Ratio	LC	LA	LF	LZ	LH	Tap×Depth*	U	W	T	Approx. Mass kg (lb)	Allowable Radial Load N (lbf)	Allowable Thrust Load N (lbf)
08□□AJ1□□	1/5	105 (4.13)	120 (4.72)	12.8 (0.50)	9 (0.35)	10.5 (0.41)	M6 × 12L	4 (0.16)	8 (0.31)	7 (0.28)	9.0 (19.8)	355 (80)	290 (70)
08□□AJ3□□	3/31	120 (4.72)	135 (5.31)	12.8 (0.50)	11 (0.43)	10.5 (0.41)	M8 × 16L	5 (0.20)	10 (0.39)	8 (0.31)	10.5 (23.1)	525 (119)	310 (111)
08□□AJC□□	1/21	145 (5.71)	135 (5.31)	12.8 (0.50)	14 (0.55)	10.5 (0.41)	M10 × 20L	5 (0.20)	12 (0.47)	8 (0.31)	15.7 (34.6)	1070 (243)	490 (70)
08□□AJ7□□	1/33	145 (5.71)	120 (4.72)	12.8 (0.50)	14 (0.55)	10.5 (0.41)	M10 × 20L	5 (0.20)	12 (0.47)	8 (0.31)	15.7 (34.6)	1205 (273)	
15□□AJ1□□	1/5	120 (4.72)	135 (5.31)	12.8 (0.50)	11 (0.43)	10.5 (0.41)	M8 × 16L	5 (0.20)	10 (0.39)	8 (0.31)	12.9 (28.4)	400 (91)	310 (111)
15□□AJ3□□	1/11	145 (5.71)	165 (6.50)	12.8 (0.50)	14 (0.55)	10.5 (0.41)	M10 × 20L	5 (0.20)	12 (0.47)	8 (0.31)	18.1 (39.9)	860 (195)	490 (70)
15□□AJC□□	1/21	170 (6.69)	190 (7.48)	12.8 (0.50)	14 (0.55)	10.5 (0.41)	M10 × 20L	5.5 (0.22)	14 (0.55)	9 (0.35)	23.1 (50.9)	1690 (383)	880 (200)
15□□AJ7□□	1/33	170 (6.69)	190 (7.48)	12.8 (0.50)	14 (0.55)	10.5 (0.41)	M10 × 20L	5.5 (0.22)	14 (0.55)	9 (0.35)	23.1 (50.9)		

- Dimensional Tolerances

Units: mm (in)

Model SGMPH-	Flange Face Dimensions	Shaft-end Dimensions
	LB	S
01□□AJ1□□	$65^{0}_{-0.030}\left(2.56^{0}_{-0.0012}\right)$	$16^{0}_{-0.018}\left(0.63^{0}_{-0.0004}\right)$
01□□AJ3□□	$65^{0}_{-0.030}\left(2.56^{0}_{-0.0012}\right)$	$16^{0}_{-0.018}\left(0.63^{0}_{-0.0004}\right)$
01□□AJC□□	$85^{0}_{-0.035}\left(3.35^{0}_{-0.0014}\right)$	$20^{0}_{-0.021}\left(0.79^{0}_{-0.0005}\right)$
01□□AJ7□□	$85^{0}_{-0.035}\left(3.35^{0}_{-0.0014}\right)$	$20^{0}_{-0.021}\left(0.79^{0}_{-0.0005}\right)$
02□□AJ1□□	$85^{0}_{-0.035}\left(3.35^{0}_{-0.0014}\right)$	$20^{0}_{-0.021}\left(0.79^{0}_{-0.0005}\right)$
02□□AJ3□□	$85^{0}_{-0.035}\left(3.35^{0}_{-0.0014}\right)$	$20^{0}_{-0.021}\left(0.79^{0}_{-0.0005}\right)$
02□□AJC□□	$100^{0}_{-0.035}\left(3.94^{0}_{-0.0014}\right)$	$25^{0}_{-0.021}\left(0.98^{0}_{-0.0005}\right)$
02□□AJ7□□	$100^{0}_{-0.035}\left(3.94^{0}_{-0.0014}\right)$	$25^{0}_{-0.021}\left(0.98^{0}_{-0.0005}\right)$
04□□AJ1□□	$85^{0}_{-0.035}\left(3.35^{0}_{-0.0014}\right)$	$20^{0}_{-0.021}\left(0.79^{0}_{-0.0005}\right)$
04□□AJ3□□	$100^{0}_{-0.035}\left(3.94^{0}_{-0.0014}\right)$	$25^{0}_{-0.021}\left(0.98^{0}_{-0.0005}\right)$
04□□AJC□□	$115^{0}_{-0.035}\left(4.53^{0}_{-0.0014}\right)$	$32^{0}_{-0.025}\left(1.26^{0}_{-0.0006}\right)$
04□□AJ7□□	$115^{0}_{-0.035}\left(4.53^{0}_{-0.0014}\right)$	$32^{0}_{-0.025}\left(1.26^{0}_{-0.0006}\right)$
08□□AJ1□□	$100^{0}_{-0.035}\left(3.94^{0}_{-0.0014}\right)$	$25^{0}_{-0.021}\left(0.98^{0}_{-0.0005}\right)$
08□□AJ3□□	$115^{0}_{-0.035}\left(4.53^{0}_{-0.0014}\right)$	$32^{0}_{-0.025}\left(1.26^{0}_{-0.0006}\right)$

Units: mm (in)

Model SGMPH-	Flange Face Dimensions	Shaft-end Dimensions
	LB	S
08□□AJC□□	$140^{0}_{-0.040}\left(5.51^{0}_{-0.0016}\right)$	$40^{0}_{-0.025}\left(1.57^{0}_{-0.0006}\right)$
08□□AJ7□□	$140^{0}_{-0.040}\left(5.51^{0}_{-0.0016}\right)$	$40^{0}_{-0.025}\left(1.57^{0}_{-0.0006}\right)$
15□□AJ1□□	$115^{0}_{-0.035}\left(4.53^{0}_{-0.0014}\right)$	$32^{0}_{-0.025}\left(1.26^{0}_{-0.0006}\right)$
15□□AJ3□□	$140^{0}_{-0.040}\left(5.51^{0}_{-0.0016}\right)$	$40^{0}_{-0.025}\left(1.57^{0}_{-0.0006}\right)$
15□□AJC□□	$165^{0}_{-0.040}\left(6.50^{0}_{-0.0016}\right)$	$45^{0}_{-0.025}\left(1.77^{0}_{-0.0006}\right)$
15□□AJ7□□	$165^{0}_{-0.040}\left(6.50^{0}_{-0.0016}\right)$	$45^{0}_{-0.025}\left(1.77^{0}_{-0.0006}\right)$

3.12.5 SGMPH Servomotors (3000 min^{-1}) With Low-backlash Gears

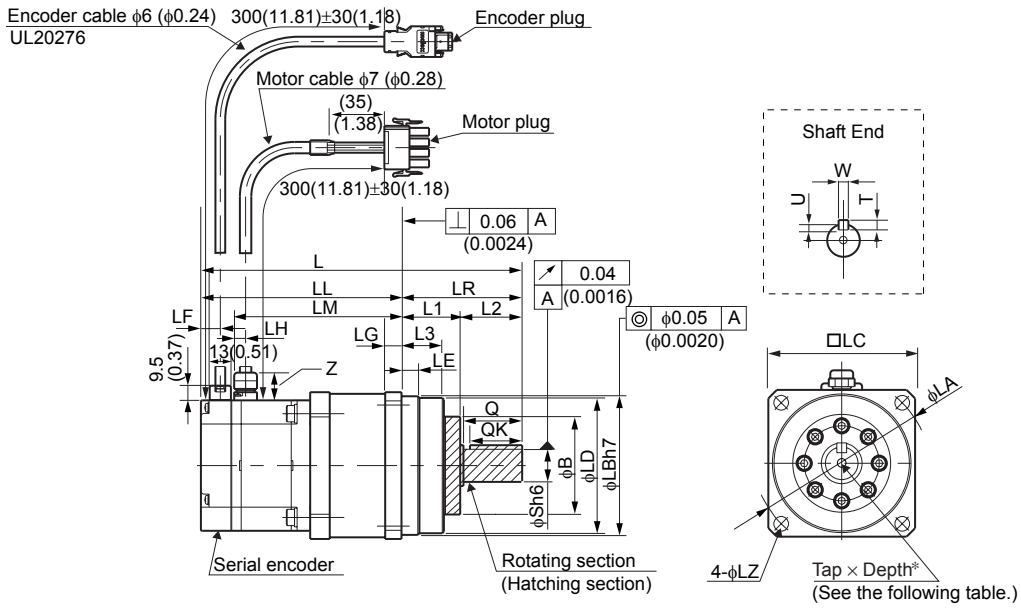

Units: mm (in)

Model SGMPH-	Gear Ratio	L	LL	LM	LR	LE	LG	B	LD	LB	L1	L2	L3	Q	QK	S	Z
01□□AH1□1	1/5	168 (6.61)	108 (4.25)	88.5 (3.48)	60 (2.36)	8 (0.31)	9 (0.35)	40 (1.57)	64.5 (2.54)	65 (2.56)	30 (1.18)	30 (1.18)	21 (0.83)	28 (1.10)	25 (0.98)	16 (0.63)	18 (0.71)
01□□AHB□1	1/11	168 (6.61)	108 (4.25)	88.5 (3.48)	60 (2.36)	8 (0.31)	9 (0.35)	40 (1.57)	64.5 (2.54)	65 (2.56)	30 (1.18)	30 (1.18)	21 (0.83)	28 (1.10)	25 (0.98)	16 (0.63)	
01□□AHC□1	1/21	191 (7.52)	117 (4.61)	97.5 (3.84)	74 (2.91)	7.5 (0.30)	10 (0.39)	59 (2.32)	84 (3.31)	85 (3.35)	36 (1.42)	38 (1.50)	26 (1.02)	36 (1.42)	32 (1.26)	20 (0.79)	
01□□AH7□1	1/33	191 (7.52)	117 (4.61)	97.5 (3.84)	74 (2.91)	7.5 (0.30)	10 (0.39)	59 (2.32)	84 (3.31)	85 (3.35)	36 (1.42)	38 (1.50)	26 (1.02)	36 (1.42)	32 (1.26)	20 (0.79)	
02□□AH1□1	1/5	197 (7.76)	123 (4.84)	104.1 (4.10)	74 (2.91)	7.5 (0.30)	10 (0.39)	59 (2.32)	84 (3.31)	85 (3.35)	36 (1.42)	38 (1.50)	26 (1.02)	36 (1.42)	32 (1.26)	20 (0.79)	
02□□AHB□1	1/11	197 (7.76)	123 (4.84)	104.1 (4.10)	74 (2.91)	7.5 (0.30)	10 (0.39)	59 (2.32)	84 (3.31)	85 (3.35)	36 (1.42)	38 (1.50)	26 (1.02)	36 (1.42)	32 (1.26)	20 (0.79)	
02□□AHC□1	1/21	215 (8.46)	131 (5.16)	112.1 (4.41)	84 (3.31)	12 (0.47)	12 (0.47)	59 (2.32)	96 (3.78)	100 (3.94)	40 (1.57)	44 (1.73)	29 (1.14)	42 (1.65)	36 (1.42)	25 (0.98)	
02□□AH7□1	1/33	215 (8.46)	131 (5.16)	112.1 (4.41)	84 (3.31)	12 (0.47)	12 (0.47)	59 (2.32)	96 (3.78)	100 (3.94)	40 (1.57)	44 (1.73)	29 (1.14)	42 (1.65)	36 (1.42)	25 (0.98)	
04□□AH1□1	1/5	217 (8.54)	143 (5.63)	124.1 (4.89)	74 (2.91)	7.5 (0.30)	10 (0.39)	59 (2.32)	84 (3.31)	85 (3.35)	36 (1.42)	38 (1.50)	26 (1.02)	36 (1.42)	32 (1.26)	20 (0.79)	

3.12.5 SGMPH Servomotors (3000 min^{-1}) With Low-backlash Gears

Units: mm (in)

Model SGMPH-	Gear Ratio	L	LL	LM	LR	LE	LG	B	LD	LB	L1	L2	L3	Q	QK	S	Z
04□□AHB□1	1/11	235 (9.25)	151 (5.94)	132.1 (5.20)	84 (3.31)	12 (0.47)	12 (0.47)	59 (2.32)	96 (3.78)	100 (3.94)	40 (1.57)	44 (1.73)	29 (1.14)	42 (1.65)	36 (1.42)	25 (0.98)	18 (0.71)
04□□AHC□1	1/21	263 (10.35)	158 (6.22)	139.1 (5.48)	105 (4.13)	14 (0.55)	13 (0.51)	59 (2.32)	112 (4.41)	115 (4.53)	45 (1.77)	60 (2.36)	33 (1.30)	58 (2.28)	50 (1.97)	32 (1.26)	
04□□AH7□1	1/33	264 (10.39)	159 (6.26)	140.1 (5.52)	105 (4.13)	12.5 (0.49)	13 (0.51)	84 (3.31)	114 (4.49)	115 (4.53)	45 (1.77)	60 (2.36)	33 (1.30)	58 (2.28)	50 (1.97)	32 (1.26)	
08□□AH1□1	1/5	234.5 (9.23)	150.5 (5.93)	130.7 (5.15)	84 (3.31)	12 (0.47)	12 (0.47)	59 (2.32)	96 (3.78)	100 (3.94)	40 (1.57)	44 (1.73)	29 (1.14)	42 (1.65)	36 (1.42)	25 (0.98)	28 (1.10)
08□□AHB□1	1/11	263.5 (10.37)	158.5 (6.24)	138.7 (5.46)	105 (4.13)	14 (0.55)	13 (0.51)	59 (2.32)	112 (4.41)	115 (4.53)	45 (1.77)	60 (2.36)	33 (1.30)	58 (2.28)	50 (1.97)	32 (1.26)	
08□□AHC□1	1/21	316.5 (12.46)	174.5 (6.87)	154.7 (6.09)	142 (5.59)	10 (0.39)	15 (0.59)	84 (3.31)	134 (5.28)	140 (5.51)	57 (2.24)	85 (3.35)	40 (1.57)	82 (3.23)	70 (2.76)	40 (1.57)	
08□□AH7□1	1/33	316.5 (12.46)	174.5 (6.87)	154.7 (6.09)	142 (5.59)	10 (0.39)	15 (0.59)	84 (3.31)	134 (5.28)	140 (5.51)	57 (2.24)	85 (3.35)	40 (1.57)	82 (3.23)	70 (2.76)	40 (1.57)	
15□□AH1□1	1/5	328.5 (12.93)	186.5 (7.34)	166.7 (6.56)	142 (5.59)	12.5 (0.49)	13 (0.51)	84 (3.31)	114 (4.49)	115 (4.53)	45 (1.77)	60 (2.36)	33 (1.30)	58 (2.28)	50 (1.97)	32 (1.26)	
15□□AHB□1	1/11	344.5 (13.56)	202.5 (7.97)	182.7 (7.19)	142 (5.59)	10 (0.39)	15 (0.59)	84 (3.31)	134 (5.28)	140 (5.51)	57 (2.24)	85 (3.35)	40 (1.57)	82 (3.23)	70 (2.76)	40 (1.57)	
15□□AGC□1	1/21	364.5 (14.35)	208.5 (8.21)	188.7 (7.43)	156 (6.14)	16 (0.63)	16 (0.63)	135 (5.31)	163 (6.42)	165 (6.50)	70 (2.76)	86 (3.39)	51 (2.01)	82 (3.23)	70 (2.76)	45 (1.77)	
15□□AG7□1	1/33	364.5 (14.35)	208.5 (8.21)	188.7 (7.43)	156 (6.14)	16 (0.63)	16 (0.63)	135 (5.31)	163 (6.42)	165 (6.50)	70 (2.76)	86 (3.39)	51 (2.01)	82 (3.23)	70 (2.76)	45 (1.77)	

INFO

1. The dimensions for L and LL of a servomotor incorporating an encoder with super-capacitor (model: SGMPH-□□□4) are as shown below.
   SGMPH-01, 02, and 04: L-dimension + 6.4 mm (0.25 in), LL-dimension +6.4 mm (0.25 in)
   SGMPH-08 and 15: L-dimension + 6.0 mm (0.24 in), LL-dimension +6.0 mm (0.24 in)
2. The working point of the SGMPH servomotor radial load is at the position of minus 5 mm from the shaft end.

Units: mm (in)

Model SGMPH-	Gear Ratio	LC	LA	LZ	LF	LH	Tap×Depth*	U	W	T	Approx. Mass kg (lb)	Allowable Radial Load N (lbf)	Allowable Thrust Load N (lbf)
01□□AH1□1	1/5	70 (2.76)	80 (3.15)	6.6 (0.26)	12.5 (0.49)	10.5 (0.41)	M4 × 8L	3 (0.12)	5 (0.20)	5 (0.20)	1.5 (3.3)	167 (38)	147 (33)
01□□AHB□1	1/11	70 (2.76)	80 (3.15)	6.6 (0.26)	12.5 (0.49)	10.5 (0.41)	M4 × 8L	3 (0.12)	5 (0.20)	5 (0.20)	1.5 (3.3)	216 (49)	
01□□AHC□1	1/21	90 (3.54)	105 (4.13)	9 (0.35)	12.5 (0.49)	10.5 (0.41)	M5 × 10L	3.5 (0.14)	6 (0.24)	6 (0.24)	3.0 (6.6)	392 (89)	235 (53)
01□□AH7□1	1/33	90 (3.54)	105 (4.13)	9 (0.35)	12.5 (0.49)	10.5 (0.41)	M5 × 10L	3.5 (0.14)	6 (0.24)	6 (0.24)	3.0 (6.6)	431 (98)	
02□□AH1□1	1/5	90 (3.54)	105 (4.13)	9 (0.35)	11.9 (0.47)	8.5 (0.33)	M5 × 10L	3.5 (0.14)	6 (0.24)	6 (0.24)	3.5 (7.7)	245 (56)	
02□□AHB□1	1/11	90 (3.54)	105 (4.13)	9 (0.35)	11.9 (0.47)	8.5 (0.33)	M5 × 10L	3.5 (0.14)	6 (0.24)	6 (0.24)	3.8 (8.4)	323 (73)	
02□□AHC□1	1/21	105 (4.13)	120 (4.72)	9 (0.35)	11.9 (0.47)	8.5 (0.33)	M6 × 12L	4 (0.16)	8 (0.31)	7 (0.28)	4.1 (9.0)	549 (124)	294 (67)
02□□AH7□1	1/33	105 (4.13)	120 (4.72)	9 (0.35)	11.9 (0.47)	8.5 (0.33)	M6 × 12L	4 (0.16)	8 (0.31)	7 (0.28)	4.1 (9.0)	608 (138)	
04□□AH1□1	1/5	90 (3.54)	105 (4.13)	9 (0.35)	11.9 (0.47)	8.5 (0.33)	M5 × 10L	3.5 (0.14)	6 (0.24)	6 (0.24)	4.2 (9.3)	245 (56)	235 (53)
04□□AHB□1	1/11	105 (4.13)	120 (4.72)	9 (0.35)	11.9 (0.47)	8.5 (0.33)	M6 × 12L	4 (0.16)	8 (0.31)	7 (0.28)	4.8 (10.6)	441 (100)	294 (67)

Units: mm (in)

Model SGMPH-	Gear Ratio	LC	LA	LZ	LF	LH	Tap×Depth*	U	W	T	Approx. Mass kg (lb)	Allowable Radial Load N (lbf)	Allowable Thrust Load N (lbf)
04□□AHC□1	1/21	120 (4.72)	135 (5.31)	11 (0.43)	11.9 (0.47)	8.5 (0.33)	M8 × 16L	5 (0.20)	10 (0.39)	8 (0.31)	5.2 (11.5)	568 (129)	314 (71)
04□□AH7□1	1/33	120 (4.72)	135 (5.31)	11 (0.43)	11.9 (0.47)	8.5 (0.33)	M8 × 16L	5 (0.20)	10 (0.39)	8 (0.31)	7.7 (16.6)	657 (149)	
08□□AH1□1	1/5	105 (4.13)	120 (4.72)	9 (0.35)	12.8 (0.50)	10.5 (0.41)	M6 × 12L	4 (0.16)	8 (0.31)	7 (0.28)	6.9 (15.2)	343 (78)	294 (67)
08□□AHB□1	1/11	120 (4.72)	135 (5.31)	11 (0.43)	12.8 (0.50)	10.5 (0.41)	M8 × 16L	5 (0.20)	10 (0.39)	8 (0.31)	8.0 (17.6)	451 (102)	314 (71)
08□□AHC□1	1/21	145 (5.71)	165 (6.50)	14 (0.55)	12.8 (0.50)	10.5 (0.41)	M10 × 20L	5 (0.20)	12 (0.47)	8 (0.31)	11.0 (24.3)	813 (184)	490 (111)
08□□AH7□1	1/33	145 (5.71)	165 (6.50)	14 (0.55)	12.8 (0.50)	10.5 (0.41)	M10 × 20L	5 (0.20)	12 (0.47)	8 (0.31)	11.0 (24.3)	921 (209)	
15□□AH1□1	1/5	120 (4.72)	135 (5.31)	11 (0.43)	12.8 (0.50)	10.5 (0.41)	M8 × 16L	5 (0.20)	10 (0.39)	8 (0.31)	9.2 (20.3)	353 (80)	314 (71)
15□□AHB□1	1/11	145 (5.71)	165 (6.50)	14 (0.55)	12.8 (0.50)	10.5 (0.41)	M10 × 20L	5 (0.20)	12 (0.47)	8 (0.31)	11.3 (24.9)	647 (147)	490 (111)
15□□AGC□1	1/21	170 (6.69)	190 (7.48)	14 (0.55)	12.8 (0.50)	10.5 (0.41)	M10 × 20L	5.5 (0.22)	14 (0.55)	9 (0.35)	23.6 (52.0)	1247 (283)	882 (200)
15□□AG7□1	1/33	170 (6.69)	190 (7.48)	14 (0.55)	12.8 (0.50)	10.5 (0.41)	M10 × 20L	5.5 (0.22)	14 (0.55)	9 (0.35)	23.6 (52.0)		

- Dimensional Tolerances

Units: mm (in)

Model SGMPH-	Flange Face Dimensions	Shaft-end Dimensions
	LB	S
01□□AH1□1	$65^{0}_{-0.030}\left(2.56^{0}_{-0.0012}\right)$	$16^{0}_{-0.018}\left(0.63^{0}_{-0.0004}\right)$
01□□AHB□1	$65^{0}_{-0.030}\left(2.56^{0}_{-0.0012}\right)$	$16^{0}_{-0.018}\left(0.63^{0}_{-0.0004}\right)$
01□□AHC□1	$85^{0}_{-0.035}\left(3.35^{0}_{-0.0014}\right)$	$20^{0}_{-0.021}\left(0.79^{0}_{-0.0005}\right)$
01□□AH7□1	$85^{0}_{-0.035}\left(3.35^{0}_{-0.0014}\right)$	$20^{0}_{-0.021}\left(0.79^{0}_{-0.0005}\right)$
02□□AH1□1	$85^{0}_{-0.035}\left(3.35^{0}_{-0.0014}\right)$	$20^{0}_{-0.021}\left(0.79^{0}_{-0.0005}\right)$
02□□AHB□1	$85^{0}_{-0.035}\left(3.35^{0}_{-0.0014}\right)$	$20^{0}_{-0.021}\left(0.79^{0}_{-0.0005}\right)$
02□□AHC□1	$100^{0}_{-0.035}\left(3.94^{0}_{-0.0014}\right)$	$25^{0}_{-0.021}\left(0.98^{0}_{-0.0005}\right)$
02□□AH7□1	$100^{0}_{-0.035}\left(3.94^{0}_{-0.0014}\right)$	$25^{0}_{-0.021}\left(0.98^{0}_{-0.0005}\right)$
04□□AH1□1	$85^{0}_{-0.035}\left(3.35^{0}_{-0.0014}\right)$	$20^{0}_{-0.021}\left(0.79^{0}_{-0.0005}\right)$
04□□AHB□1	$100^{0}_{-0.035}\left(3.94^{0}_{-0.0014}\right)$	$25^{0}_{-0.021}\left(0.98^{0}_{-0.0005}\right)$
04□□AHC□1	$115^{0}_{-0.035}\left(4.53^{0}_{-0.0014}\right)$	$32^{0}_{-0.025}\left(1.26^{0}_{-0.0006}\right)$
04□□AH7□1	$115^{0}_{-0.035}\left(4.53^{0}_{-0.0014}\right)$	$32^{0}_{-0.025}\left(1.26^{0}_{-0.0006}\right)$

3.12.5 SGMPH Servomotors (3000 min^{-1}) With Low-backlash Gears

Units: mm (in)

Model SGMPH-	Flange Face Dimensions	Shaft-end Dimensions
	LB	S
08□□AH1□1	$100^{0}_{-0.035}\left(3.94^{0}_{-0.0014}\right)$	$25^{0}_{-0.021}\left(0.98^{0}_{-0.0005}\right)$
08□□AHB□1	$115^{0}_{-0.035}\left(4.53^{0}_{-0.0014}\right)$	$32^{0}_{-0.025}\left(1.26^{0}_{-0.0006}\right)$
08□□AHC□1	$140^{0}_{-0.040}\left(5.51^{0}_{-0.0016}\right)$	$40^{0}_{-0.025}\left(1.57^{0}_{-0.0006}\right)$
08□□AH7□1	$140^{0}_{-0.040}\left(5.51^{0}_{-0.0016}\right)$	$40^{0}_{-0.025}\left(1.57^{0}_{-0.0006}\right)$
15□□AH1□1	$115^{0}_{-0.035}\left(4.53^{0}_{-0.0014}\right)$	$32^{0}_{-0.025}\left(1.26^{0}_{-0.0006}\right)$
15□□AHB□1	$140^{0}_{-0.040}\left(5.51^{0}_{-0.0016}\right)$	$40^{0}_{-0.025}\left(1.57^{0}_{-0.0006}\right)$
15□□AGC□1	$165^{0}_{-0.040}\left(6.50^{0}_{-0.0016}\right)$	$45^{0}_{-0.025}\left(1.77^{0}_{-0.0006}\right)$
15□□AG7□1	$165^{0}_{-0.040}\left(6.50^{0}_{-0.0016}\right)$	$45^{0}_{-0.025}\left(1.77^{0}_{-0.0006}\right)$

3.13 Dimensional Drawing of Output Shafts With Oil Seals for SGMAH and SGMPH Servomotors

For the SGMAH and SGMPH servomotors with oil seals, the external dimensions of output shafts differ as shown below.

3.13.1 SGMAH Servomotors

Model		SGMAH-A3, A5, 01	SGMAH-02, 03, 04	SGMAH-07, 08
Capacity		30 W, 50 W, 100 W	200 to 400 W	650 W, 750 W
Dimensions of Output Shaft mm (in)	LO	7.5 (0.30)	10 (0.39)	11 (0.43)
	DO	ϕ28 (ϕ1.10)	ϕ48 (ϕ1.89)	ϕ66 (ϕ2.60)
	QK	14 (0.55)	14 (0.55)	25 (0.98)
	LB	$\phi30^{0}_{-0.021}$ ($\phi1.181^{0}_{-0.00083}$)	$\phi50^{0}_{-0.025}$ ($\phi1.9685^{0}_{-0.00098}$)	$\phi70^{0}_{-0.030}$ ($\phi2.756^{0}_{-0.00012}$)
Dimensional Drawing		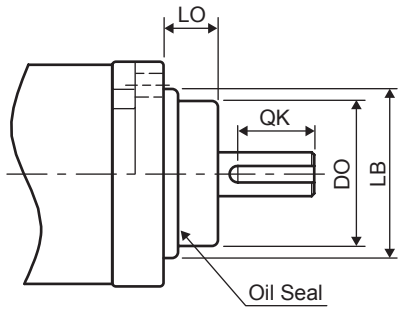		

3.13.2 SGMPH Servomotors

Model		SGMPH-01	SGMPH-02, 04	SGMPH-08	SGMPH-15
Capacity		100 W	200 W, 400 W	750 W	1500 W
Dimensions of Output Shaft mm (in)	LO	7 (0.28)	10 (0.39)	10.5 (0.41)	10.5 (0.41)
	DO	ϕ39 (ϕ1.54)	ϕ49 (ϕ1.93)	ϕ77 (ϕ3.03)	ϕ77 (ϕ3.03)
	QK	14 (0.55)	16 (0.63)	22 (0.87)	22 (0.87)
	LB	$\phi50^{0}_{-0.025}$ ($\phi1.97^{-0.0015}_{-0.0025}$)	$\phi70^{0}_{-0.030}$ ($\phi2.756^{-0.0001}_{-0.0013}$)	$\phi110^{0}_{-0.035}$ ($\phi4.33^{+0.0007}_{-0.0007}$)	$\phi110^{0}_{-0.035}$ ($\phi4.33^{+0.0007}_{-0.0007}$)
Dimensional Drawing		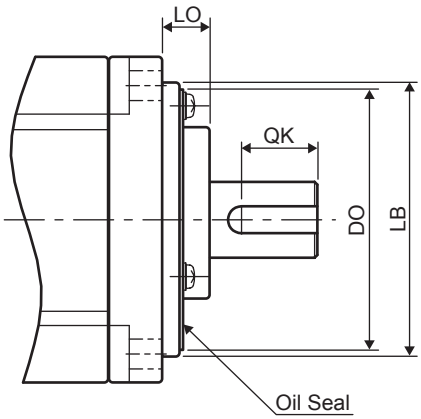			

3.14 Dimensional Drawings of SGMGH Servomotors (1500 min^{-1})

3.14.1 SGMGH Servomotors (1500 min^{-1}) Without Gears and Brakes

Models with oil seals are of the same configuration.

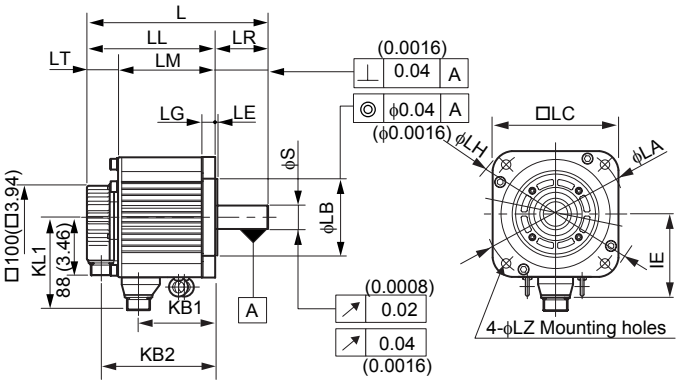

For 55□□A to 1E□□A only

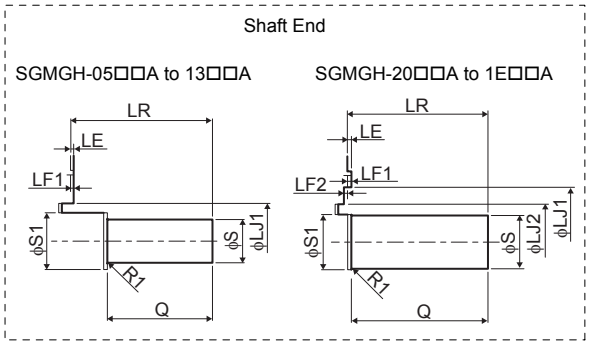

Note: For the specifications of the other shaft ends, refer to *3.19 Shaft End Specifications for SGMGH, SGMSH and SGMDH Servomotors*.

Units: mm (in)

Model SGMGH-	L	LL	LM	LR	LT	KB1	KB2	IE	KL1	Shaft-end Dimensions S	Shaft-end Dimensions S1	Shaft-end Dimensions Q	Approx. Mass kg (lb)	Allowable Radial Load N (lbf)	Allowable Thrust Load N (lbf)
05A□A21 05D□A21	196 (7.72)	138 (5.43)	92 (3.62)	58 (2.28)	46 (1.81)	65 (2.56)	117 (4.61)	–	109 (4.29)	$19^{0}_{-0.013}$ ($0.75^{0}_{-0.0005}$)	30 (1.18)	40 (1.57)	5.5 (12.1)	490 (110)	98 (22)
09A□A21 09D□A21	219 (8.62)	161 (6.34)	115 (4.53)	58 (2.28)	46 (1.81)	88 (3.46)	140 (5.51)	–	109 (4.29)	$19^{0}_{-0.013}$ ($0.75^{0}_{-0.0005}$)	30 (1.18)	40 (1.57)	7.6 (16.8)	490 (110)	98 (22)
13A□A21 13D□A21	243 (9.57)	185 (7.28)	139 (5.47)	58 (2.28)	46 (1.81)	112 (4.41)	164 (6.46)	–	109 (4.29)	$22^{0}_{-0.013}$ ($0.87^{0}_{-0.0005}$)	30 (1.18)	40 (1.57)	9.6 (21.2)	686 (154)	343 (77)
20A□A21 20D□A21	245 (9.65)	166 (6.54)	119 (4.69)	79 (3.11)	47 (1.85)	89 (3.50)	144 (5.67)	–	140 (5.51)	$35^{+0.01}_{0}$ ($1.38^{+0.0004}_{0}$)	45 (1.77)	76 (2.99)	14 (30.9)	1176 (265)	490 (110)
30A□A21 30D□A21	271 (10.7)	192 (7.56)	145 (5.71)	79 (3.11)	47 (1.85)	115 (4.53)	170 (6.69)	–	140 (5.51)	$35^{+0.01}_{0}$ ($1.38^{+0.0004}_{0}$)	45 (1.77)	76 (2.99)	18 (39.7)	1470 (331)	490 (110)
44A□A21 44D□A21	305 (12.0)	226 (8.90)	179 (7.05)	79 (3.11)	47 (1.85)	149 (5.87)	204 (8.03)	–	140 (5.51)	$35^{+0.01}_{0}$ ($1.38^{+0.0004}_{0}$)	45 (1.77)	76 (2.99)	23 (50.7)	1470 (331)	490 (110)
55A□A21 55D□A21	373 (14.7)	260 (10.2)	213 (8.39)	113 (4.45)	47 (1.85)	174 (6.85)	238 (9.37)	123 (4.84)	150 (5.91)	$42^{0}_{-0.016}$ ($1.65^{0}_{-0.0006}$)	45 (1.77)	110 (4.33)	30 (66.1)	1764 (397)	588 (132)
75A□A21 75D□A21	447 (17.6)	334 (13.1)	287 (11.3)	113 (4.45)	47 (1.85)	248 (9.76)	312 (12.3)	123 (4.84)	150 (5.91)	$42^{0}_{-0.016}$ ($1.65^{0}_{-0.0006}$)	45 (1.77)	110 (4.33)	40 (88.2)	1764 (397)	588 (132)

Units: mm (in)

Model SGMGH-	L	LL	LM	LR	LT	KB1	KB2	IE	KL1	Shaft-end Dimensions			Approx. Mass kg (lb)	Allowable Radial Load N (lbf)	Allowable Thrust Load N (lbf)
										S	S1	Q			
1AA□A21 1AD□A21	454 (17.9)	338 (13.3)	291 (11.5)	116 (4.57)	47 (1.85)	251 (9.88)	316 (12.4)	142 (5.59)	168 (6.61)	$42^{0}_{-0.016}$ $\left(1.65^{0}_{-0.0006}\right)$	45 (1.77)	110 (4.33)	57.5 (126)	1764 (397)	588 (132)
1EA□A21 1ED□A21	573 (22.6)	457 (18.0)	409 (16.1)	116 (4.57)	48 (1.89)	343 (13.5)	435 (17.1)	150 (5.91)	168 (6.61)	$55^{+0.030}_{+0.011}$ $\left(2.17^{+0.001}_{+0.0004}\right)$	65 (2.56)	110 (4.33)	86 (189)	4998 (1125)	2156 (485)

Units: mm (in)

Model SGMGH-	Flange Face Dimensions										
	LA	LB	LC	LE	LF1	LF2	LG	LH	LJ1	LJ2	LZ
05A□A21 05D□A21	145 (5.71)	$110^{0}_{-0.035}$ $\left(4.33^{0}_{-0.0014}\right)$	130 (5.12)	6 (0.24)	6 (0.24)	–	12 (0.47)	165 (6.50)	45 (1.77)	–	9 (0.35)
09A□A21 09D□A21	145 (5.71)	$110^{0}_{-0.035}$ $\left(4.33^{0}_{-0.0014}\right)$	130 (5.12)	6 (0.24)	6 (0.24)	–	12 (0.47)	165 (6.50)	45 (1.77)	–	9 (0.35)
13A□A21 13D□A21	145 (5.71)	$110^{0}_{-0.035}$ $\left(4.33^{0}_{-0.0014}\right)$	130 (5.12)	6 (0.24)	6 (0.24)	–	12 (0.47)	165 (6.50)	45 (1.77)	–	9 (0.35)
20A□A21 20D□A21	200 (7.87)	$114.3^{0}_{-0.025}$ $\left(4.50^{0}_{-0.0010}\right)$	180 (7.09)	3.2 (0.13)	3 (0.12)	0.5 (0.02)	18 (0.71)	230 (9.06)	76 (2.99)	62 (2.44)	13.5 (0.53)
30A□A21 30D□A21	200 (7.87)	$114.3^{0}_{-0.025}$ $\left(4.50^{0}_{-0.0010}\right)$	180 (7.09)	3.2 (0.13)	3 (0.12)	0.5 (0.02)	18 (0.71)	230 (9.06)	76 (2.99)	62 (2.44)	13.5 (0.53)
44A□A21 44D□A21	200 (7.87)	$114.3^{0}_{-0.025}$ $\left(4.50^{0}_{-0.0010}\right)$	180 (7.09)	3.2 (0.13)	3 (0.12)	0.5 (0.02)	18 (0.71)	230 (9.06)	76 (2.99)	62 (2.44)	13.5 (0.53)
55A□A21 55D□A21	200 (7.87)	$114.3^{0}_{-0.025}$ $\left(4.50^{0}_{-0.0010}\right)$	180 (7.09)	3.2 (0.13)	3 (0.12)	0.5 (0.02)	18 (0.71)	230 (9.06)	76 (2.99)	62 (2.44)	13.5 (0.53)
75A□A21 75D□A21	200 (7.87)	$114.3^{0}_{-0.025}$ $\left(4.50^{0}_{-0.0010}\right)$	180 (7.09)	3.2 (0.13)	3 (0.12)	0.5 (0.02)	18 (0.71)	230 (9.06)	76 (2.99)	62 (2.44)	13.5 (0.53)
1AA□A21 1AD□A21	235 (9.25)	$200^{0}_{-0.046}$ $\left(7.87^{0}_{-0.0018}\right)$	220 (8.66)	4 (0.16)	4 (0.16)	–	18 (0.71)	270 (10.6)	62 (2.44)	–	13.5 (0.53)
1EA□A21 1ED□A21	235 (9.25)	$200^{0}_{-0.046}$ $\left(7.87^{0}_{-0.0018}\right)$	220 (8.66)	4 (0.16)	4 (0.16)	–	20 (0.79)	270 (10.6)	85 (3.35)	–	13.5 (0.53)

• Cable Specifications for Detector Connectors (17-bit Encoder)

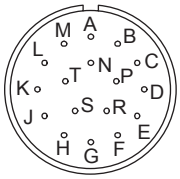

Receptacle: MS3102A20-29P
Applicable plug (purchased by the customer)
Plug: MS3108B20-29S
Cable clamp: MS3057-12A

With an Absolute Encoder

A	–	K	–
B	–	L	–
C	DATA+	M	–
D	DATA-	N	–
E	–	P	–
F	–	R	–
G	0V	S	BATT-
H	+5VDC	T	BATT+
J	FG (Frame ground)	–	–

With an Incremental Encoder

A	–	K	–
B	–	L	–
C	DATA+	M	–
D	DATA-	N	–
E	–	P	–
F	–	R	–
G	0V	S	–
H	+5VDC	T	–
J	FG (Frame ground)	–	–

• Cable Specifications for Servomotor Connectors

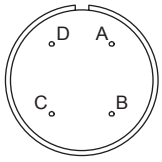

A	Phase U
B	Phase V
C	Phase W
D	FG (Frame ground)

3.14.2 SGMGH Servomotors (1500 min^{-1}) 200-V Specifications Without Gears and With Brakes

(1) 500 W to 4.4 kW

Models with oil seals are of the same configuration.

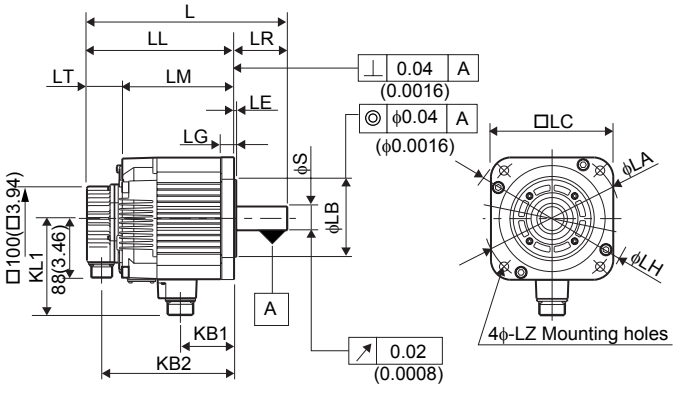

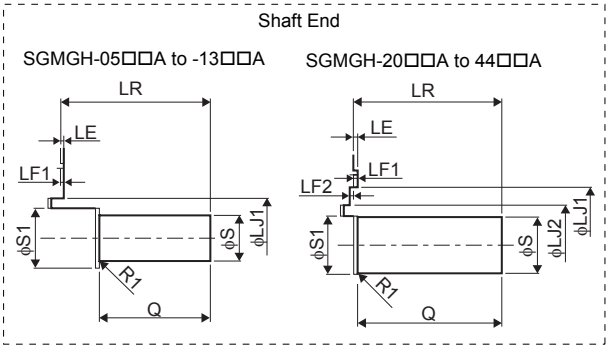

Note: For the specifications of the other shaft ends, refer to *3.19 Shaft End Specifications for SGMGH, SGMSH and SGMDH Servomotors*.

• Cable Specifications for Servomotor Connectors

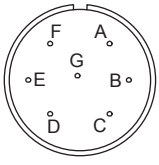

A	Phase U	E	Brake terminal
B	Phase V	F	Brake terminal
C	Phase W	G	–
D	FG (Frame ground)	–	–

Units: mm (in)

Model SGMGH-	L	LL	LM	LR	LT	KB 1	KB 2	KL1	Shaft-end Dimensions			Approx. Mass kg (lb)	Allowable Radial Load N (lbf)	Allowable Thrust Load N (lbf)
									S	S1	Q			
05A□A2□	234 (9.21)	176 (6.93)	130 (5.12)	58 (2.28)	46 (1.81)	56 (2.20)	154 (6.06)	120 (4.72)	$19^{0}_{-0.013}$ $\left(0.75^{0}_{-0.0005}\right)$	30 (1.18)	40 (1.57)	7.5 (16.5)	490 (110)	98 (22)
09A□A2□	257 (10.1)	199 (7.83)	152 (5.98)	58 (2.28)	47 (1.85)	79 (3.11)	177 (6.97)	120 (4.72)	$19^{0}_{-0.013}$ $\left(0.75^{0}_{-0.0005}\right)$	30 (1.18)	40 (1.57)	9.6 (21.2)	490 (110)	98 (22)
13A□A2□	281 (11.1)	223 (8.78)	176 (6.93)	58 (2.28)	47 (1.85)	103 (4.06)	201 (7.91)	120 (4.72)	$22^{0}_{-0.013}$ $\left(0.87^{0}_{-0.0005}\right)$	30 (1.18)	40 (1.57)	12 (26.5)	686 (154)	343 (77)
20A□A2□	296 (11.7)	217 (8.54)	170 (6.69)	79 (3.11)	47 (1.85)	79 (3.11)	195 (7.68)	146 (5.75)	$35^{+0.01}_{0}$ $\left(1.38^{+0.0004}_{0}\right)$	45 (1.77)	76 (2.99)	19 (41.9)	1176 (265)	490 (110)
30A□A2□	322 (12.7)	243 (9.57)	196 (7.72)	79 (3.11)	47 (1.85)	105 (4.13)	221 (8.70)	146 (5.75)	$35^{+0.01}_{0}$ $\left(1.38^{+0.0004}_{0}\right)$	45 (1.77)	76 (2.99)	23.5 (51.8)	1470 (331)	490 (110)
44A□A2□	356 (14.0)	277 (10.9)	230 (9.06)	79 (3.11)	47 (1.85)	139 (5.47)	255 (10.0)	146 (5.75)	$35^{+0.01}_{0}$ $\left(1.38^{+0.0004}_{0}\right)$	45 (1.77)	76 (2.99)	28.5 (62.8)	1470 (331)	490 (110)

Units: mm (in)

Model SGMGH-	Flange Face Dimensions										
	LA	LB	LC	LE	LF1	LF2	LG	LH	LJ1	LJ2	LZ
05A□A2□	145 (5.71)	$110^{0}_{-0.035}$ $\left(4.33^{0}_{-0.0014}\right)$	130 (5.12)	6 (0.24)	6 (0.24)	–	12 (0.47)	165 (6.50)	45 (1.77)	–	9 (0.35)
09A□A2□	145 (5.71)	$110^{0}_{-0.035}$ $\left(4.33^{0}_{-0.0014}\right)$	130 (5.12)	6 (0.24)	6 (0.24)	–	12 (0.47)	165 (6.50)	45 (1.77)	–	9 (0.35)
13A□A2□	145 (5.71)	$110^{0}_{-0.035}$ $\left(4.33^{0}_{-0.0014}\right)$	130 (5.12)	6 (0.24)	6 (0.24)	–	12 (0.47)	165 (6.50)	45 (1.77)	–	9 (0.35)
20A□A2□	200 (7.87)	$114.3^{0}_{-0.025}$ $\left(4.50^{0}_{-0.0010}\right)$	180 (7.09)	3.2 (0.13)	3 (0.12)	0.5 (0.02)	18 (0.71)	230 (9.06)	76 (2.99)	62 (2.44)	13.5 (0.53)
30A□A2□	200 (7.87)	$114.3^{0}_{-0.025}$ $\left(4.50^{0}_{-0.0010}\right)$	180 (7.09)	3.2 (0.13)	3 (0.12)	0.5 (0.02)	18 (0.71)	230 (9.06)	76 (2.99)	62 (2.44)	13.5 (0.53)
44A□A2□	200 (7.87)	$114.3^{0}_{-0.025}$ $\left(4.50^{0}_{-0.0010}\right)$	180 (7.09)	3.2 (0.13)	3 (0.12)	0.5 (0.02)	18 (0.71)	230 (9.06)	76 (2.99)	62 (2.44)	13.5 (0.53)

(2) 5.5kW to 15kW

Models with oil seals are of the same configuration.

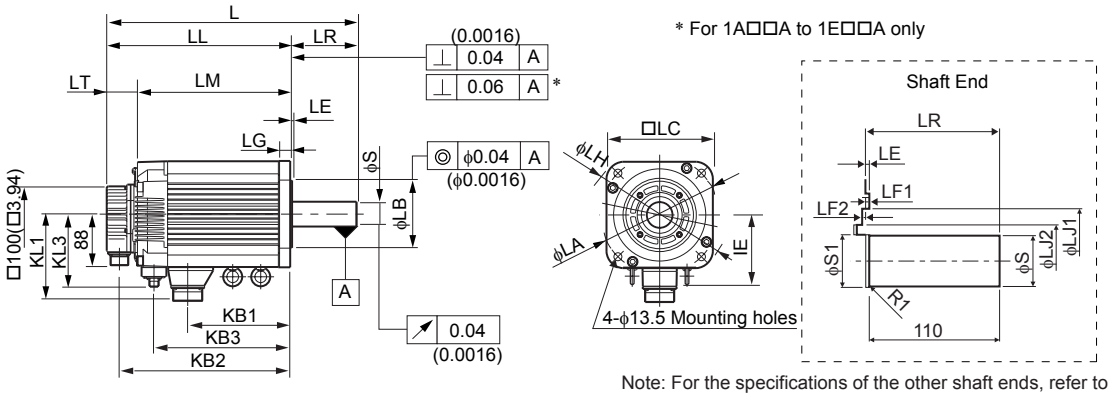

Note: For the specifications of the other shaft ends, refer to *3.19 Shaft End Specifications for SGMGH, SGMSH and SGMDH Servomotors*.

- Cable Specifications for Servomotor Connectors

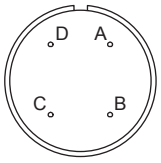

A	Phase U
B	Phase V
C	Phase W
D	FG (Frame ground)

- Cable Specifications for Brake Connectors

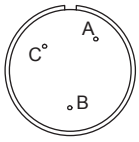

A	Brake terminal
B	Brake terminal
C	–

Units: mm (in)

Model SGMGH-	L	LL	LM	LR	LT	KB1	KB2	KB3	IE	KL1	KL3	Shaft-end Dimensions S	Shaft-end Dimensions S1	Approx. Mass kg (lb)
55A□A2□	424 (16.7)	311 (12.2)	263 (10.4)	113 (4.45)	48 (1.89)	174 (6.85)	289 (11.4)	231 (9.09)	123 (4.84)	150 (5.91)	123 (4.84)	$42^{0}_{-0.016}$ $\left(1.65^{0}_{-0.0006}\right)$	45 (1.77)	35 (77.2)
75A□A2□	498 (19.6)	385 (15.2)	337 (13.3)	113 (4.45)	48 (1.89)	248 (9.76)	363 (14.3)	305 (12.0)	123 (4.84)	150 (5.91)	123 (4.84)	$42^{0}_{-0.016}$ $\left(1.65^{0}_{-0.0006}\right)$	45 (1.77)	45.5 (100)
1AA□A2□	499 (19.6)	383 (15.1)	340 (13.4)	116 (4.57)	43 (1.69)	258 (10.2)	362 (14.3)	315 (12.4)	142 (5.59)	168 (6.61)	142 (5.59)	$42^{0}_{-0.016}$ $\left(1.65^{0}_{-0.0006}\right)$	45 (1.77)	65 (143)
1EA□A2□	635 (25.0)	519 (20.4)	471 (18.5)	116 (4.57)	48 (1.89)	343 (13.5)	497 (19.6)	415 (16.3)	150 (5.91)	168 (6.61)	142 (5.59)	$55^{+0.030}_{+0.011}$ $\left(2.17^{+0.0012}_{+0.0004}\right)$	65 (2.56)	100 (220)

Units: mm (in)

Model SGMGH-	Flange Face Dimensions LA	LB	LC	LE	LF1	LF2	LG	LH	LJ1	LJ2	Allowable Radial Load N (lbf)	Allowable Thrust Load N (lbf)
55A□A2□	200 (7.87)	$114.3^{0}_{-0.025}$ $\left(4.50^{0}_{-0.0010}\right)$	180 (7.09)	3.2 (0.13)	3 (0.12)	0.5 (0.02)	18 (0.71)	230 (9.06)	76 (2.99)	62 (2.44)	1764 (397)	588 (132)

Units: mm (in)

Model SGMGH-	Flange Face Dimensions										Allowable Radial Load N (lbf)	Allowable Thrust Load N (lbf)
	LA	LB	LC	LE	LF1	LF2	LG	LH	LJ1	LJ2		
75A□A2□	200 (7.87)	$114.3^{0}_{-0.025}$ ($4.50^{0}_{-0.0010}$)	180 (7.09)	3.2 (0.13)	3 (0.12)	0.5 (0.02)	18 (0.71)	230 (9.06)	76 (2.99)	62 (2.44	1764 (397)	588 (132)
1AA□A2□	235 (9.25)	$200^{0}_{-0.046}$ ($7.87^{0}_{-0.0018}$)	220 (8.66)	4 (0.16)	4 (0.16)	–	18 (0.71)	270 (10.6)	62 (2.44)	62 (2.44)	1764 (397)	588 (132)
1EA□A2□	235 (9.25)	$200^{0}_{-0.046}$ ($7.87^{0}_{-0.0018}$)	220 (8.66)	4 (0.16)	4 (0.16)	–	20 (0.79)	270 (10.6)	85 (3.35)	–	4998 (1125)	2156 (485)

3.14.3 Servomotors SGMGH (1500 min^{-1}) 400-V Specifications Without Gears and With Brakes

- 500W to 15kW

Model with oil seals are of the same configuration.

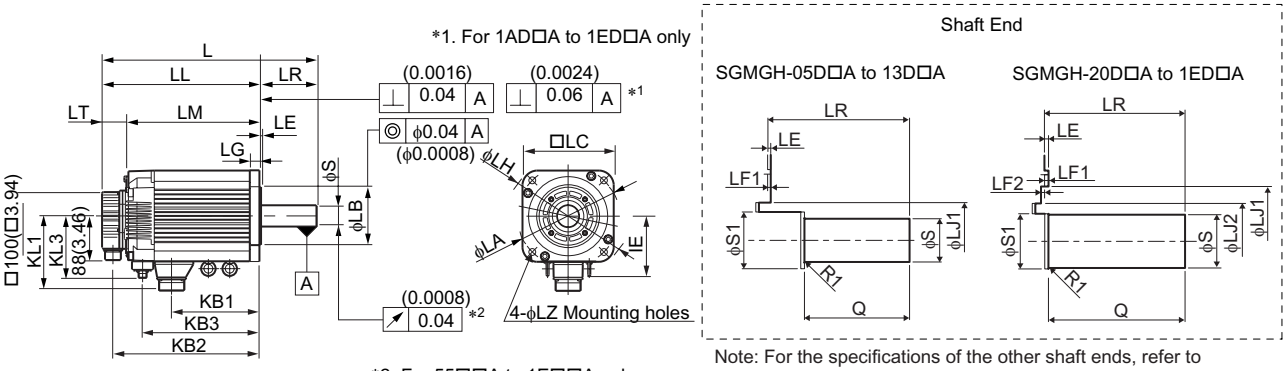

Note: For the specifications of the other shaft ends, refer to *3.19 Shaft End Specifications for SGMGH, SGMSH and SGMDH Servomotors.*

Units: mm (in)

Model SGMGH-	L	LL	LM	LR	LT	KB1	KB2	KB3	IE	KL1	KL3	Shaft-end Dimensions			Approx. Mass kg (lb)
												S	S1	Q	
05D□A2□	234 (9.21)	176 (6.93)	130 (5.12)	58 (2.28)	46 (1.81)	65 (2.56)	154 (6.06)	109 (4.29)	–	109 (4.29)	98 (3.86)	$19^{0}_{-0.013}$ ($0.75^{0}_{-0.0005}$)	30 (1.18)	40 (1.57)	7.5 (16.5)
09D□A2□	257 (10.1)	199 (7.83)	153 (6.02)	58 (2.28)	46 (1.81)	88 (3.46)	177 (6.97)	132 (5.20)	–	109 (4.29)	98 (3.86)	$19^{0}_{-0.013}$ ($0.75^{0}_{-0.0005}$)	30 (1.18)	40 (1.57)	9.6 (21.2)
13D□A2□	281 (11.1)	223 (8.78)	177 (6.97)	58 (2.28)	46 (1.81)	112 (4.41)	201 (7.91)	156 (6.14)	–	109 (4.29)	98 (3.86)	$22^{0}_{-0.013}$ ($0.87^{0}_{-0.0005}$)	30 (1.18)	40 (1.57)	12 (26.5)
20D□A2□	296 (11.7)	217 (8.54)	169 (6.95)	79 (3.11)	48 (1.89)	89 (3.50)	195 (7.68)	137 (5.39)	–	140 (5.51)	123 (4.84)	$35^{+0.01}_{0}$ ($1.38^{+0.0004}_{0}$)	45 (1.77)	76 (2.99)	19 (41.9)

3.14.3 Servomotors SGMGH (1500 min^{-1}) 400-V Specifications Without Gears and With Brakes

Units: mm (in)

Model SGMGH-	L	LL	LM	LR	LT	KB1	KB2	KB3	IE	KL1	KL3	Shaft-end Dimensions			Approx. Mass kg (lb)
												S	S1	Q	
30D□A2□	322 (12.7)	243 (9.57)	195 (7.68)	79 (3.11)	48 (1.89)	115 (4.53)	221 (8.70)	163 (6.42)	–	140 (5.51)	123 (4.84)	$35^{+0.01}_{0}$ $\left(1.38^{+0.0004}_{0}\right)$	45 (1.77)	76 (2.99)	23.5 (51.8)
44D□A2□	356 (14.0)	277 (10.9)	229 (9.02)	79 (3.11)	48 (1.89)	149 (5.87)	255 (10.0)	197 (7.76)	–	140 (5.51)	123 (4.84)	$35^{+0.01}_{0}$ $\left(1.38^{+0.0004}_{0}\right)$	45 (1.77)	76 (2.99)	28.5 (62.8)
55D□A2□	424 (16.7)	311 (12.2)	263 (10.4)	113 (4.45)	48 (1.89)	174 (6.85)	289 (11.4)	231 (9.09)	123 (4.84)	150 (5.91)	123 (4.84)	$42^{0}_{-0.016}$ $\left(1.65^{0}_{-0.0006}\right)$	45 (1.77)	110 (4.33)	35 (77.2)
75D□A2□	498 (19.6)	385 (15.2)	337 (13.3)	113 (4.45)	48 (1.89)	248 (9.76)	363 (14.3)	305 (12.0)	123 (4.84)	150 (5.91)	123 (4.84)	$42^{0}_{-0.016}$ $\left(1.65^{0}_{-0.0006}\right)$	45 (1.77)	110 (4.33)	45.5 (100)
1AD□A2□	499 (19.6)	383 (15.1)	340 (13.4)	116 (4.57)	43 (1.69)	258 (10.2)	362 (14.3)	315 (12.4)	142 (5.59)	168 (6.61)	142 (5.59)	$42^{0}_{-0.016}$ $\left(1.65^{0}_{-0.0006}\right)$	45 (1.77)	110 (4.33)	65 (143)
1ED□A2□	635 (25.0)	519 (20.4)	471 (18.5)	116 (4.57)	48 (1.89)	343 (13.5)	497 (19.6)	415 (16.3)	150 (5.91)	168 (6.61)	142 (5.59)	$55^{+0.030}_{+0.011}$ $\left(2.17^{+0.0012}_{+0.0004}\right)$	65 (2.56)	110 (4.33)	100 (221)

Units: mm (in)

Model SGMGH-	Flange Face Dimensions											Allowable Radial Load N (lbf)	Allowable Thrust Load N (lbf)
	LA	LB	LC	LE	LF1	LF2	LG	LH	LJ1	LJ2	LZ		
05D□A2□	145 (5.71)	$110^{0}_{-0.035}$ $\left(4.33^{0}_{-0.0014}\right)$	130 (5.12)	6 (0.24)	6 (0.24)	–	12 (0.47)	165 (6.50)	45 (1.77)	–	9 (0.35)	490 (110)	98 (22)
09D□A2□	145 (5.71)	$110^{0}_{-0.035}$ $\left(4.33^{0}_{-0.0014}\right)$	130 (5.12)	6 (0.24)	6 (0.24)	–	12 (0.47)	165 (6.50)	45 (1.77)	–	9 (0.35)	490 (110)	98 (22)
13D□A2□	145 (5.71)	$110^{0}_{-0.035}$ $\left(4.33^{0}_{-0.0014}\right)$	130 (5.12)	6 (0.24)	6 (0.24)	–	12 (0.47)	165 (6.50)	45 (1.77)	–	9 (0.35)	686 (154)	343 (77)
20D□A2□	200 (7.87)	$114.3^{0}_{-0.025}$ $\left(4.50^{0}_{-0.0010}\right)$	180 (7.09)	3.2 (0.13)	3 (0.12)	0.5 (0.02)	18 (0.71)	230 (9.06)	76 (2.99)	62 (2.44)	13.5 (0.53)	1176 (264)	490 (110)
30D□A2□	200 (7.87)	$114.3^{0}_{-0.025}$ $\left(4.50^{0}_{-0.0010}\right)$	180 (7.09)	3.2 (0.13)	3 (0.12)	0.5 (0.02)	18 (0.71)	230 (9.06)	76 (2.99)	62 (2.44)	13.5 (0.53)	1470 (331)	490 (110)
44D□A2□	200 (7.87)	$114.3^{0}_{-0.025}$ $\left(4.50^{0}_{-0.0010}\right)$	180 (7.09)	3.2 (0.13)	3 (0.12)	0.5 (0.02)	18 (0.71)	230 (9.06)	76 (2.99)	62 (2.44)	13.5 (0.53)	1470 (331)	490 (110)
55D□A2□	200 (7.87)	$114.3^{0}_{-0.025}$ $\left(4.50^{0}_{-0.0010}\right)$	180 (7.09)	3.2 (0.13)	3 (0.12)	0.5 (0.02)	18 (0.71)	230 (9.06)	76 (2.99)	62 (2.44)	13.5 (0.53)	1764 (397)	588 (132)

Units: mm (in)

Model SGMGH-	Flange Face Dimensions											Allowable Radial Load N (lbf)	Allowable Thrust Load N (lbf)
	LA	LB	LC	LE	LF1	LF2	LG	LH	LJ1	LJ2	LZ		
75D□A2□	200 (7.87)	$114.3^{0}_{-0.025}$ ($4.50^{0}_{-0.0010}$)	180 (7.09)	3.2 (0.13)	3 (0.12)	0.5 (0.02)	18 (0.71)	230 (9.06)	76 (2.99)	62 (2.44)	13.5 (0.53)	1764 (397)	588 (132)
1AD□A2□	235 (9.25)	$200^{0}_{-0.046}$ ($7.87^{0}_{-0.0018}$)	220 (8.66)	4 (0.16)	4 (0.16)	–	18 (0.71)	270 (10.6)	62 (2.44)	–	13.5 (0.53)	1764 (397)	588 (132)
1ED□A2□	235 (9.25)	$200^{0}_{-0.046}$ ($7.87^{0}_{-0.0018}$)	220 (8.66)	4 (0.16)	4 (0.16)	–	20 (0.79)	270 (10.6)	85 (3.35)	–	13.5 (0.53)	4998 (1125)	2156 (485)

• Cable Specifications for Detector Connectors (17-bit Encoder)

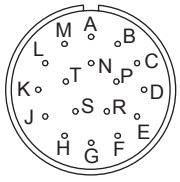

Receptacle: MS3102A20-29P
Applicable plug (purchased by the customer)
Plug: MS3108B20-29S
Cable clamp: MS3057-12A

With an Absolute Encoder

A	–	K	–
B	–	L	–
C	DATA+	M	–
D	DATA-	N	–
E	–	P	–
F	–	R	–
G	0V	S	BATT-
H	+5VDC	T	BATT+
J	FG (Frame ground)	-	–

With an Incremental Encoder

A	–	K	–
B	–	L	–
C	DATA+	M	–
D	DATA-	N	–
E	–	P	–
F	–	R	–
G	0V	S	–
H	+5VDC	T	–
J	FG (Frame ground)	-	–

• Cable Specifications for Servomotor Connectors

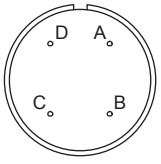

A	Phase U
B	Phase V
C	Phase W
D	FG (Frame ground)

• Cable Specifications for Brake Connectors

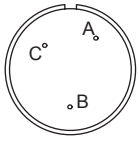

A	Brake terminal
B	Brake terminal
C	–

3.14.4 SGMGH Servomotors (1500min^{-1}) With Standard Backlash Gears and Without Brakes (Foot-mounted Type)

(1) Grease Lubricating Type

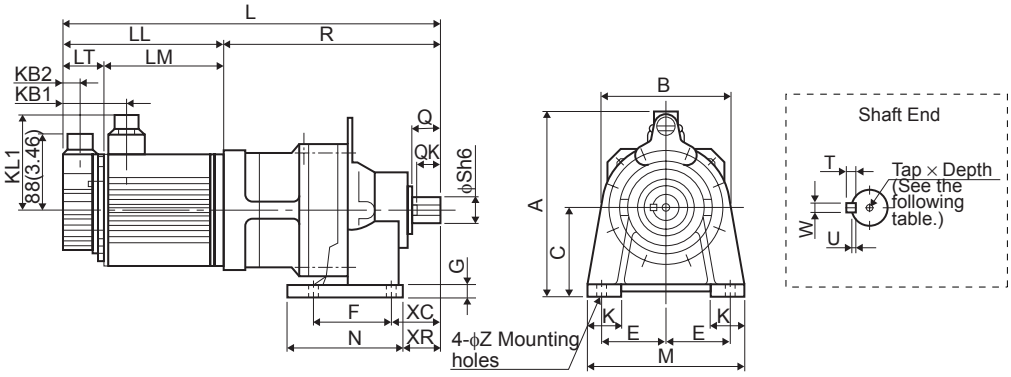

Units: mm (in)

Model SGMGH-	Gear Model	Gear Ratio	L	LL	LM	LT	KB1	KB2	KL1	R	A	B	C*	Shaft Center Allowable Radial Load N (lbf)
05A□ASA6 05D□ASA6	CNHX-4095	1/6	380 (15.0)	138 (5.43)	92 (3.62)	46 (1.81)	73 (2.87)	21 (0.83)	109 (4.29)	242 (9.53)	209 (8.23)	152 (5.98)	100 (3.94)	2050 (461)
05A□ASB6 05D□ASB6	CNHX-4095	1/11	380 (15.0)	138 (5.43)	92 (3.62)	46 (1.81)	73 (2.87)	21 (0.83)	109 (4.29)	242 (9.53)	209 (8.23)	152 (5.98)	100 (3.94)	2520 (567)
05A□ASC6 05D□ASC6	CNHX-4105	1/21	394 (15.5)	138 (5.43)	92 (3.62)	46 (1.81)	73 (2.87)	21 (0.83)	109 (4.29)	256 (10.08)	209 (8.23)	152 (5.98)	100 (3.94)	4940 (1111)
05A□AS76 05D□AS76	CNHX-4105	1/29	394 (15.5)	138 (5.43)	92 (3.62)	46 (1.81)	73 (2.87)	21 (0.83)	109 (4.29)	256 (10.1)	209 (8.23)	152 (5.98)	100 (3.94)	5360 (1206)
09A□ASA6 09D□ASA6	CNHX-4105	1/6	417 (16.4)	161 (6.34)	115 (4.53)	46 (1.81)	73 (2.87)	21 (0.83)	109 (4.29)	256 (10.1)	209 (8.23)	152 (5.98)	100 (3.94)	3240 (729)
09A□ASB6 09D□ASB6	CNHX-4105	1/11	417 (16.4)	161 (6.34)	115 (4.53)	46 (1.81)	73 (2.87)	21 (0.83)	109 (4.29)	256 (10.1)	209 (8.23)	152 (5.98)	100 (3.94)	3840 (864)
09A□ASC6 09D□ASC6	CNHX-4115	1/21	449 (17.7)	161 (6.34)	115 (4.53)	46 (1.81)	73 (2.87)	21 (0.83)	109 (4.29)	288 (11.3)	257 (10.1)	204 (8.03)	120 (4.72)	6190 (1393)
09A□AS76 09D□AS76	CNHX-4115	1/29	449 (17.7)	161 (6.34)	115 (4.53)	46 (1.81)	73 (2.87)	21 (0.83)	109 (4.29)	288 (11.3)	257 (10.1)	204 (8.03)	120 (4.72)	6870 (1546)
13A□ASA6 13D□ASA6	CNHX-4105	1/6	441 (17.4)	185 (7.28)	139 (5.47)	46 (1.81)	73 (2.87)	21 (0.83)	109 (4.29)	256 (10.1)	209 (8.23)	152 (5.98)	100 (3.94)	3240 (729)
13A□ASB6 13D□ASB6	CNHX-4115	1/11	473 (18.6)	185 (7.28)	139 (5.47)	46 (1.81)	73 (2.87)	21 (0.83)	109 (4.29)	288 (11.3)	257 (10.1)	204 (8.03)	120 (4.72)	4970 (1118)
13A□ASC6 13D□ASC6	CNHX-4115	1/21	473 (18.6)	185 (7.28)	139 (5.47)	46 (1.81)	73 (2.87)	21 (0.83)	109 (4.29)	288 (11.3)	257 (10.1)	204 (8.03)	120 (4.72)	6190 (1393)
20A□ASA6 20D□ASA6	CNHX-4115	1/6	477 (18.8)	166 (6.54)	119 (4.69)	47 (1.85)	77 (3.03)	22 (0.87)	140 (5.51)	311 (12.2)	260 (10.2)	204 (8.03)	120 (4.72)	4050 (911)
20A□ASB6 20D□ASB6	CNHX-4115	1/11	477 (18.8)	166 (6.54)	119 (4.69)	47 (1.85)	77 (3.03)	22 (0.87)	140 (5.51)	311 (12.2)	260 (10.2)	204 (8.03)	120 (4.72)	4970 (1118)
30A□ASA6 30D□ASA6	CNHX-4115	1/6	503 (19.8)	192 (7.56)	145 (5.71)	47 (1.85)	77 (3.03)	22 (0.87)	140 (5.51)	311 (12.2)	260 (10.2)	204 (8.03)	120 (4.72)	4050 (911)

Units: mm (in)

Model SGMGH-	Gear Model	Gear Ratio	L	LL	LM	LT	KB1	KB2	KL1	R	A	B	C*	Shaft Center Allowable Radial Load N (lbf)
30A□ASB6 30D□ASB6	CNHX-4115	1/11	503 (19.8)	192 (7.56)	145 (5.71)	47 (1.85)	77 (3.03)	22 (0.87)	140 (5.51)	311 (12.2)	260 (10.2)	204 (8.03)	120 (4.72)	4970 (1118)

* The tolerances for all models are $^{0}_{-0.5}$.

Model SGMGH-	Gear Ratio	Foot-mounted Dimensions mm (in)									Shaft-end Dimensions mm (in)							Approx. Mass kg (lb)
		E	F	G	K	M	N	XR	XC	Z	Q	QK	S	T	U	W	Tap × Depth	
05A□ASA6 05D□ASA6	1/6	75 (2.95)	90 (3.54)	12 (0.47)	40 (1.57)	180 (7.09)	130 (5.12)	45 (1.77)	60 (2.36)	11 (0.43)	35 (1.38)	32 (1.26)	28 (1.10)	7 (0.28)	4 (0.16)	8 (0.31)	M8 × 19	20.5 (45.2)
05A□ASB6 05D□ASB6	1/11	75 (2.95)	90 (3.54)	12 (0.47)	40 (1.57)	180 (7.09)	130 (5.12)	45 (1.77)	60 (2.36)	11 (0.43)	35 (1.38)	32 (1.26)	28 (110)	7 (0.28)	4 (0.16)	8 (0.31)	M8 × 19	20.5 (45.2)
05A□ASC6 05D□ASC6	1/21	75 (2.95)	90 (3.54)	12 (0.47)	40 (1.57)	180 (7.09)	135 (5.31)	45 (1.77)	60 (2.36)	11 (0.43)	35 (1.38)	32 (1.26)	28 (1.10)	7 (0.28)	4 (0.16)	8 (0.31)	M8 × 19	22.5 (49.6)
05A□AS76 05D□AS76	1/29	75 (2.95)	90 (3.54)	12 (0.47)	40 (1.57)	180 (7.09)	135 (5.31)	45 (1.77)	60 (2.36)	11 (0.43)	35 (1.38)	32 (1.26)	28 (1.10)	7 (0.28)	4 (0.16)	8 (0.31)	M8 ×19	22.5 (49.6)
09A□ASA6 09D□ASA6	1/6	75 (2.95)	90 (3.54)	12 (0.47)	40 (1.57)	180 (7.09)	135 (5.31)	45 (1.77)	60 (2.36)	11 (0.43)	35 (1.38)	32 (1.26)	28 (1.10)	7 (0.28)	4 (0.16)	8 (0.31)	M8 × 19	24.6 (54.2)
09A□ASB6 09D□ASB6	1/11	75 (2.95)	90 (3.54)	12 (0.47)	40 (1.57)	180 (7.09)	135 (5.31)	45 (1.77)	60 (2.36)	11 (0.43)	35 (1.38)	32 (1.26)	28 (1.10)	7 (0.28)	4 (0.16)	8 (0.31)	M8 × 19	24.6 (54.2)
09A□ASC6 09D□ASC6	1/21	95 (3.74)	115 (4.53)	15 (0.59)	55 (2.17)	230 (9.06)	155 (6.10)	62 (2.44)	82 (3.23)	14 (0.55)	55 (2.17)	50 (1.97)	38 (1.50)	8 (0.31)	5 (0.20)	10 (0.39)	M10×22	34.6 (76.3)
09A□AS76 09D□AS76	1/29	95 (3.74)	115 (4.53)	15 (0.59)	55 (2.17)	230 (9.06)	155 (6.10)	62 (2.44)	82 (3.23)	14 (0.55)	55 (2.17)	50 (1.97)	38 (1.50)	8 (0.31)	5 (0.20)	10 (0.39)	M10×22	34.6 (76.3)
13A□ASA6 13D□ASA6	1/6	75 (2.95)	90 (3.54)	12 (0.47)	40 (1.57)	180 (7.09)	135 (5.31)	45 (1.77)	60 (2.36)	11 (0.43)	35 (1.38)	32 (1.26)	28 (1.10)	7 (0.28)	4 (0.16)	8 (0.31)	M8 × 19	26.6 (58.6)
13A□ASB6 13D□ASB6	1/11	95 (3.74)	115 (4.53)	15 (0.59)	55 (2.17)	230 (9.06)	155 (6.10)	62 (2.44)	82 (3.23)	14 (0.55)	55 (2.17)	50 (1.97)	38 (1.50)	8 (0.31)	5 (0.20)	10 (0.39)	M10×22	36.6 (80.7)
13A□ASC6 13D□ASC6	1/21	95 (3.74)	115 (4.53)	15 (0.59)	55 (2.17)	230 (9.06)	155 (6.10)	62 (2.44)	82 (3.23)	14 (0.55)	55 (2.17)	50 (1.97)	38 (1.50)	8 (0.31)	5 (0.20)	10 (0.39)	M10×22	36.6 (80.7)
20A□ASA6 20D□ASA6	1/6	95 (3.74)	115 (4.53)	15 (0.59)	55 (2.17)	230 (9.06)	155 (6.10)	62 (2.44)	82 (3.23)	14 (0.55)	55 (2.17)	50 (1.97)	38 (1.50)	8 (0.31)	5 (0.20)	10 (0.39)	M10×22	43 (94.8)
20A□ASB6 20D□ASB6	1/11	95 (3.74)	115 (4.53)	15 (0.59)	55 (2.17)	230 (9.06)	155 (6.10)	62 (2.44)	82 (3.23)	14 (0.55)	55 (2.17)	50 (1.97)	38 (1.50)	8 (0.31)	5 (0.20)	10 (0.39)	M10×22	43 (94.8)
30A□ASA6 30D□ASA6	1/6	95 (3.74)	115 (4.53)	15 (0.59)	55 (2.17)	230 (9.06)	155 (6.10)	62 (2.44)	82 (3.23)	14 (0.55)	55 (2.17)	50 (1.97)	38 (1.50)	8 (0.31)	5 (0.20)	10 (0.39)	M10×22	47 (104)
30A□ASB6 30D□ASB6	1/11	95 (3.74)	115 (4.53)	15 (0.59)	55 (2.17)	230 (9.06)	155 (6.10)	62 (2.44)	82 (3.23)	14 (0.55)	55 (2.17)	50 (1.97)	38 (1.50)	8 (0.31)	5 (0.20)	10 (0.39)	M10×22	47 (104)

- Dimensional Tolerances

Units: mm (in)

Model SGMGH-	Shaft-end Dimensions S
05A□ASA6	$28^{0}_{-0.013}\left(1.10^{0}_{-0.0005}\right)$
05D□ASA6	
05A□ASB6	$28^{0}_{-0.013}\left(1.10^{0}_{-0.0005}\right)$
05D□ASB6	
05A□ASC6	$28^{0}_{-0.013}\left(1.10^{0}_{-0.0005}\right)$
05D□ASC6	
05A□AS76	$28^{0}_{-0.013}\left(1.10^{0}_{-0.0005}\right)$
05D□AS76	
09A□ASA6	$28^{0}_{-0.013}\left(1.10^{0}_{-0.0005}\right)$
09D□ASA6	
09A□ASB6	$28^{0}_{-0.013}\left(1.10^{0}_{-0.0005}\right)$
09D□ASB6	
09A□ASC6	$38^{0}_{-0.016}\left(1.50^{0}_{-0.0006}\right)$
09D□ASC6	
09A□AS76	$38^{0}_{-0.016}\left(1.50^{0}_{-0.0006}\right)$
09D□AS76	
13A□ASA6	$28^{0}_{-0.013}\left(1.10^{0}_{-0.0005}\right)$
13D□ASA6	
13A□ASB6	$38^{0}_{-0.016}\left(1.50^{0}_{-0.0006}\right)$
13D□ASB6	
13A□ASC6	$38^{0}_{-0.016}\left(1.50^{0}_{-0.0006}\right)$
13D□ASC6	
20A□ASA6	$38^{0}_{-0.016}\left(1.50^{0}_{-0.0006}\right)$
20D□ASA6	
20A□ASB6	$38^{0}_{-0.016}\left(1.50^{0}_{-0.0006}\right)$
20D□ASB6	
30A□ASA6	$38^{0}_{-0.016}\left(1.50^{0}_{-0.0006}\right)$
30D□ASA6	
30A□ASB6	$38^{0}_{-0.016}\left(1.50^{0}_{-0.0006}\right)$
30D□ASB6	

INFO

■ Lubrication

- Grease lubricating type (frame numbers: 4095 to 4115)
  Since grease has been filled prior to shipment, the servomotors can be used without replenishing grease.

(2) Oil Lubricating Type

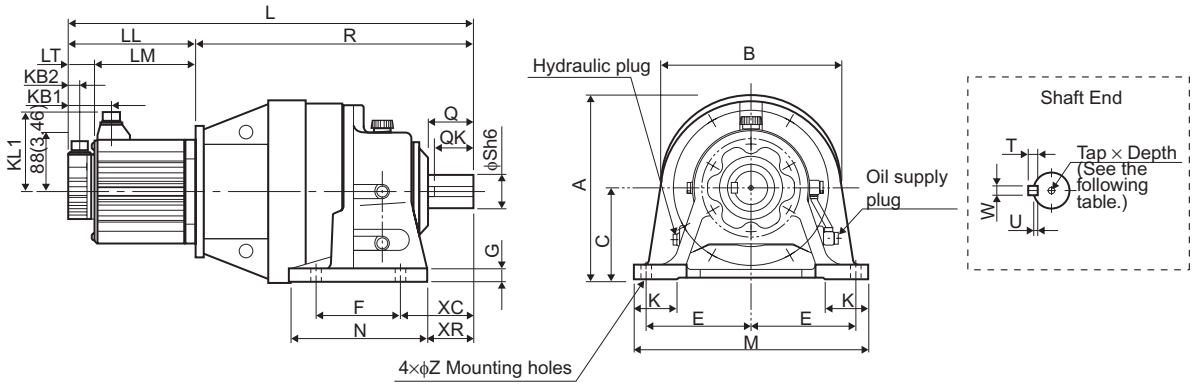

Units: mm (in)

Model SGMGH-	Gear Model	Gear Ratio	L	LL	LM	LT	KB1	KB2	KL1	R	A	B	C*	Shaft Center Allowable Radial Load N (lbf)
13A□AS76 13D□AS76	CHHX-4135	1/29	532 (20.9)	185 (7.28)	139 (5.47)	46 (1.81)	73 (2.87)	21 (0.83)	109 (4.29)	347 (13.7)	300 (11.8)	246 (9.69)	150 (5.91)	9900 (2228)
20A□ASC6 20D□ASC6	CHHX-4130	1/21	536 (21.1)	166 (6.54)	119 (4.69)	47 (1.85)	77 (3.03)	22 (0.87)	140 (5.51)	370 (14.6)	300 (11.8)	246 (9.69)	150 (5.91)	8940 (2012)
20A□AS76 20D□AS76	CHHX-4135	1/29	536 (21.1)	166 (6.54)	119 (4.69)	47 (1.85)	77 (3.03)	22 (0.87)	140 (5.51)	370 (14.6)	300 (11.8)	246 (9.69)	150 (5.91)	9900 (2228)
30A□ASC6 30D□ASC6	CHHX-4145	1/21	582 (22.9)	192 (7.56)	145 (5.71)	47 (1.85)	77 (3.03)	22 (0.87)	140 (5.51)	390 (15.4)	300 (11.8)	246 (9.69)	150 (5.91)	11590 (2608)
30A□AS76 30D□AS76	CHHJ-4160	1/29	687 (27.0)	192 (7.56)	145 (5.71)	47 (1.85)	77 (3.03)	22 (0.87)	140 (5.51)	495 (19.5)	319 (12.6)	318 (12.5)	160 (6.30)	16290 (3665)
44A□ASA6	CHHX-4130	1/6	596 (23.5)	226 (8.90)	179 (7.05)	47 (1.85)	77 (3.03)	22 (0.87)	140 (5.51)	370 (14.6)	300 (11.8)	246 (9.69)	150 (5.91)	5870 (1321)
44A□ASB6	CHHX-4135	1/11	596 (23.5)	226 (8.90)	179 (7.05)	47 (1.85)	77 (3.03)	22 (0.87)	140 (5.51)	370 (14.6)	300 (11.8)	246 (9.69)	150 (5.91)	7190 (1618)
44A□ASC6	CHHJ-4160	1/21	721 (28.4)	226 (8.90)	179 (7.05)	47 (1.85)	77 (3.03)	22 (0.87)	140 (5.51)	495 (19.5)	319 (12.6)	318 (12.5)	160 (6.30)	14640 (3294)
44A□AS76	CHHJ-4170	1/29	785 (30.9)	226 (8.90)	179 (7.05)	47 (1.85)	77 (3.03)	22 (0.87)	140 (5.51)	559 (22.0)	382 (15.0)	363 (14.3)	200 (7.87)	19020 (4280)
55A□ASA6	CHHX-4135	1/6	664 (26.1)	260 (10.2)	213 (8.39)	47 (1.85)	86 (3.39)	22 (0.87)	150 (5.91)	404 (15.9)	300 (11.8)	246 (9.69)	150 (5.91)	5870 (1321)
55A□ASB6	CHHX-4145	1/11	684 (26.9)	260 (10.2)	213 (8.39)	47 (1.85)	86 (3.39)	22 (0.87)	150 (5.91)	424 (16.7)	300 (11.8)	246 (9.69)	150 (5.91)	9500 (2138)
55A□ASC6	CHHJ-4170	1/21	853 (33.6)	260 (10.2)	213 (8.39)	47 (1.85)	86 (3.39)	22 (0.87)	150 (5.91)	593 (23.3)	382 (15.0)	363 (14.3)	200 (7.87)	17180 (3866)
55A□AS76	CHHJ-4175	1/29	853 (33.6)	260 (10.2)	213 (8.39)	47 (1.85)	86 (3.39)	22 (0.87)	150 (5.91)	593 (23.3)	382 (15.0)	363 (14.3)	200 (7.87)	19020 (4280)
75A□ASB6	CHHJ-4160	1/11	863 (34.0)	334 (13.1)	287 (11.3)	47 (1.85)	86 (3.39)	22 (0.87)	150 (5.91)	529 (20.8)	319 (12.6)	318 (12.6)	160 (6.30)	11740 (2642)
75A□ASC6	CHHJ-4175	1/21	927 (36.5)	334 (13.1)	287 (11.3)	47 (1.85)	86 (3.39)	22 (0.87)	150 (5.91)	593 (23.3)	382 (15.0)	363 (14.3)	200 (7.87)	17180 (3866)
75A□AS76	CHHJ-4180	1/29	977 (38.5)	334 (13.1)	287 (11.3)	47 (1.85)	86 (3.39)	22 (0.87)	150 (5.91)	643 (25.3)	417 (16.4)	392 (15.4)	220 (8.66)	25600 (5760)

3.14.4 SGMGH Servomotors (1500min^{-1}) With Standard Backlash Gears and Without Brakes (Foot-mounted Type)

Units: mm (in)

Model SGMGH-	Gear Model	Gear Ratio	L	LL	LM	LT	KB1	KB2	KL1	R	A	B	C*	Shaft Center Allowable Radial Load N (lbf)
1AA□ASB6	CHHJ-4170	1/11	934 (36.8)	338 (13.3)	291 (11.5)	47 (1.85)	87 (3.43)	21 (0.83)	168 (6.61)	596 (23.5)	382 (15.0)	363 (14.3)	200 (7.87)	13800 (3105)
1AA□ASC6	CHHJ-4185	1/21	984 (38.7)	338 (13.3)	291 (11.5)	47 (1.85)	87 (3.43)	21 (0.83)	168 (6.61)	646 (25.4)	417 (16.4)	393 (15.5)	220 (8.66)	23010 (5177)
1AA□AS76	CHHJ-4190	1/29	1077 (42.4)	338 (13.3)	291 (11.5)	47 (1.85)	87 (3.43)	21 (0.83)	168 (6.61)	739 (29.1)	477 (18.8)	454 (17.9)	250 (9.84)	35810 (8057)

* The tolerances for all models are $^{0}_{-0.5}$.

Units: mm (in)

Model SGMGH-	Gear Ratio	Foot-mounted Dimensions mm (in)									Shaft-end Dimensions mm (in)							Approx. Mass kg (lb)
		E	F	G	K	M	N	XR	XC	Z	Q	QK	S	T	U	W	Tap × Depth	
13A□AS76 13D□AS76	1/29	145 (5.71)	145 (5.71)	22 (0.87)	65 (2.56)	330 (13.0)	195 (7.68)	75 (2.95)	100 (3.94)	18 (0.71)	70 (2.76)	56 (2.20)	50 (1.97)	9 (0.35)	5.5 (0.22)	14 (0.55)	M10 × 18	57.6 (127)
20A□ASC6 20D□ASC6	1/21	145 (5.71)	145 (5.71)	22 (0.87)	65 (2.56)	330 (13.0)	195 (7.68)	75 (2.95)	100 (3.94)	18 (0.71)	70 (2.76)	56 (2.20)	50 (1.97)	9 (0.35)	5.5 (0.22)	14 (0.55)	M10 × 18	67 (148)
20A□AS76 20D□AS76	1/29	145 (5.71)	145 (5.71)	22 (0.87)	65 (2.56)	330 (13.0)	195 (7.68)	75 (2.95)	100 (3.94)	18 (0.71)	70 (2.76)	56 (2.20)	50 (1.97)	9 (0.35)	5.5 (0.22)	14 (0.55)	M10 × 18	67 (148)
30A□ASC6 30D□ASC6	1/21	145 (5.71)	145 (5.71)	22 (0.87)	65 (2.56)	330 (13.0)	195 (7.68)	95 (3.74)	120 (4.72)	18 (0.71)	90 (3.54)	80 (3.15)	50 (1.97)	9 (0.35)	5.5 (0.22)	14 (0.55)	M10 × 18	72 (159)
30A□AS76 30D□AS76	1/29	185 (7.28)	150 (5.91)	25 (0.98)	75 (2.95)	410 (16.1)	238 (9.37)	95 (3.74)	139 (5.47)	18 (0.71)	90 (3.54)	80 (3.15)	60 (2.36)	11 (0.43)	7 (0.28)	18 (0.71)	M10 × 18	126 (278)
44A□ASA6	1/6	145 (5.71)	145 (5.71)	22 (0.87)	65 (2.56)	330 (13.0)	195 (7.68)	75 (2.95)	100 (3.94)	18 (0.71)	70 (2.76)	56 (2.20)	50 (1.97)	9 (0.35)	5.5 (0.22)	14 (0.55)	M10 × 18	76 (168)
44A□ASB6	1/11	145 (5.71)	145 (5.71)	22 (0.87)	65 (2.56)	330 (13.0)	195 (7.68)	75 (2.95)	100 (3.94)	18 (0.71)	70 (2.76)	56 (2.20)	50 (1.97)	9 (0.35)	5.5 (0.22)	14 (0.55)	M10 × 18	76 (168)
44A□ASC6	1/21	185 (7.28)	150 (5.91)	25 (0.98)	75 (2.95)	410 (16.1)	238 (9.37)	95 (3.74)	139 (5.47)	18 (0.71)	90 (3.54)	80 (3.15)	60 (2.36)	11 (0.43)	7 (0.28)	18 (0.71)	M10 × 18	131 (289)
44A□AS76	1/29	190 (7.48)	275 (10.8)	30 (1.18)	80 (3.15)	430 (16.9)	335 (13.2)	95 (3.74)	125 (4.92)	22 (0.87)	90 (3.54)	80 (3.15)	70 (2.76)	12 (0.47)	7.5 (0.30)	20 (0.79)	M12 × 24	176 (388)
55A□ASA6	1/6	145 (5.71)	145 (5.71)	22 (0.87)	65 (2.56)	330 (13.0)	195 (7.68)	75 (2.95)	100 (3.94)	18 (0.71)	70 (2.76)	56 (2.20)	50 (1.97)	9 (0.35)	5.5 (0.22)	14 (0.55)	M10 × 18	88 (194)
55A□ASB6	1/11	145 (5.71)	145 (5.71)	22 (0.87)	65 (2.56)	330 (13.0)	195 (7.68)	95 (3.74)	120 (4.72)	18 (0.71)	90 (3.54)	80 (3.15)	50 (1.97)	9 (0.35)	5.5 (0.22)	14 (0.55)	M10 × 18	89 (196)
55A□ASC6	1/21	190 (7.48)	275 (10.8)	30 (1.18)	80 (3.15)	430 (16.9)	335 (13.2)	95 (3.74)	125 (4.92)	22 (0.87)	90 (3.54)	80 (3.15)	70 (2.76)	12 (0.47)	7.5 (0.30)	20 (0.79)	M12 × 24	191 (421)
55A□AS76	1/29	190 (7.48)	275 (10.8)	30 (1.18)	80 (3.15)	430 (16.9)	335 (13.2)	95 (3.74)	125 (4.92)	22 (0.87)	90 (3.54)	80 (3.15)	70 (2.76)	12 (0.47)	7.5 (0.30)	20 (0.79)	M12 × 24	191 (421)
75A□ASB6	1/11	185 (7.28)	150 (5.91)	25 (0.98)	75 (2.95)	410 (16.1)	238 (9.37)	95 (3.74)	139 (5.47)	18 (0.71)	90 (3.54)	80 (3.15)	60 (2.36)	11 (0.43)	7 (0.28)	18 (0.71)	M10 × 18	155 (342)
75A□ASC6	1/21	190 (7.48)	275 (10.8)	30 (1.18)	80 (3.15)	430 (16.9)	335 (13.2)	95 (3.74)	125 (4.92)	22 (0.87)	90 (3.54)	80 (3.15)	70 (2.76)	12 (0.47)	7.5 (0.30)	20 (0.79)	M12 × 24	201 (443)
75A□AS76	1/29	210 (8.27)	320 (12.6)	30 (1.18)	85 (3.35)	470 (18.5)	380 (15.0)	115 (4.53)	145 (5.71)	22 (0.87)	110 (4.33)	100 (3.94)	80 (3.15)	14 (0.55)	9 (0.35)	22 (0.87)	M12 × 24	245 (540)

Units: mm (in)

Model SGMGH-	Gear Ratio	Foot-mounted Dimensions mm (in)									Shaft-end Dimensions mm (in)							Approx. Mass kg (lb)
		E	F	G	K	M	N	XR	XC	Z	Q	QK	S	T	U	W	Tap × Depth	
1AA□ASB6	1/11	190 (7.48)	275 (10.8)	30 (1.18)	80 (3.15)	430 (16.9)	335 (13.2)	95 (3.74)	125 (4.92)	22 (0.87)	90 (3.54)	80 (3.15)	70 (2.76)	12 (0.47)	7.5 (0.30)	20 (0.79)	M12 × 24	230.5 (508)
1AA□ASC6	1/21	210 (8.27)	320 (12.6)	30 (1.18)	85 (3.35)	470 (18.5)	380 (15.0)	115 (4.53)	145 (5.71)	22 (0.87)	110 (4.33)	100 (3.94)	80 (3.15)	14 (0.55)	9 (0.35)	22 (0.87)	M12 × 24	276.5 (610)
1AA□AS76	1/29	240 (9.45)	380 (15.0)	35 (1.38)	90 (3.54)	530 (20.9)	440 (17.3)	140 (5.51)	170 (6.69)	26 (1.02)	135 (5.31)	125 (4.92)	95 (3.74)	14 (0.55)	9 (0.35)	25 (0.98)	M20 × 34	357.5 (788)

- Dimensional Tolerances

Units: mm (in)

Model SGMGH-	Shaft-end Dimensions S
13A□AS76	$50^{0}_{-0.016}\left(1.97^{0}_{-0.0006}\right)$
13D□AS76	
20A□ASC6	$50^{0}_{-0.016}\left(1.97^{0}_{-0.0006}\right)$
20D□ASC6	
20A□AS76	$50^{0}_{-0.016}\left(1.97^{0}_{-0.0006}\right)$
20D□AS76	
30A□ASC6	$50^{0}_{-0.016}\left(1.97^{0}_{-0.0006}\right)$
30D□ASC6	
30A□AS76	$60^{0}_{-0.019}\left(2.36^{0}_{-0.0007}\right)$
30D□AS76	
44A□ASA6	$50^{0}_{-0.016}\left(1.97^{0}_{-0.0006}\right)$
44A□ASB6	$50^{0}_{-0.016}\left(1.97^{0}_{-0.0006}\right)$
44A□ASC6	$60^{0}_{-0.019}\left(2.36^{0}_{-0.0007}\right)$
44A□AS76	$70^{0}_{-0.019}\left(2.76^{0}_{-0.0007}\right)$
55A□ASA6	$50^{0}_{-0.016}\left(1.97^{0}_{-0.0006}\right)$
55A□ASB6	$50^{0}_{-0.016}\left(1.97^{0}_{-0.0006}\right)$
55A□ASC6	$70^{0}_{-0.019}\left(2.76^{0}_{-0.0007}\right)$
55A□AS76	$70^{0}_{-0.019}\left(2.76^{0}_{-0.0007}\right)$
75A□ASB6	$60^{0}_{-0.019}\left(2.36^{0}_{-0.0007}\right)$
75A□ASC6	$70^{0}_{-0.019}\left(2.76^{0}_{-0.0007}\right)$
75A□AS76	$80^{0}_{-0.019}\left(3.15^{0}_{-0.0007}\right)$
1AA□ASB6	$70^{0}_{-0.019}\left(2.76^{0}_{-0.0007}\right)$
1AA□ASC6	$80^{0}_{-0.019}\left(3.15^{0}_{-0.0007}\right)$
1AA□AS76	$95^{0}_{-0.022}\left(3.74^{0}_{-0.009}\right)$

INFO

■ Lubrication

- Oil lubricating type (frame numbers: 4130 to 4190)

  Servomotors of this type have been shipped with oil removed. Be sure to supply oil until the red line at the upper side of the oil gauge.

  Lubrication oil recommended is industrial-use extreme-pressure gear oil of SP-system, JIS K 2219 industrial-use gear oil or equivalent. Refer to the following table.

Ambient Temperature	Manufacturer		
	COSMO Oil Co., Ltd.	Nippon Oil Co., Ltd.	Tonen General Sekiyu K. K.
0 to 35 °C (32 to 95 °F)	COSMO Gear SE 100, 150	BON-NOCK M 100, 150	GENERAL SP Gear Roll 100, 150

The following shows approximate oil amount to be supplied.

Units: liter

Frame No.	4130 4135	4145	4155	4160 4165	4170 4175	4180 4185	4190
Horizontal type	0.7	0.7	0.7	1.4	1.9	2.5	4.0

3.14.5 SGMGH Servomotors (1500min^{-1}) With Standard Backlash Gears and Without Brakes (Flange-mounted Type)

(1) Grease Lubricating Type

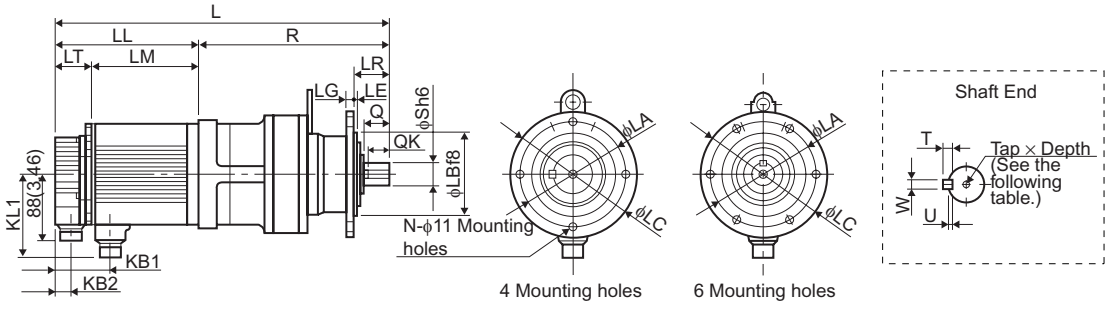

Units: mm (in)

Model SGMGH-	Gear Model	Gear Ratio	L	LL	LM	LT	KB1	KB2	KL1	R	Shaft Center Allowable Radial Load N (lbf)
05A□ATA6 05D□ATA6	CNVX-4095	1/6	380 (15.0)	138 (5.43)	92 (3.62)	46 (1.81)	73 (2.87)	21 (0.83)	109 (4.29)	242 (9.53)	2050 (461)
05A□ATB6 05D□ATB6	CNVX-4095	1/11	380 (15.0)	138 (5.43)	92 (3.62)	46 (1.81)	73 (2.87)	21 (0.83)	109 (4.29)	242 (9.53)	2520 (567)
05A□ATC6 05D□ATC6	CNVX-4105	1/21	394 (15.5)	138 (5.43)	92 (3.62)	46 (1.81)	73 (2.87)	21 (0.83)	109 (4.29)	256 (10.1)	4940 (1112)
05A□AT76 05D□AT76	CNVX-4105	1/29	394 (15.5)	138 (5.43)	92 (3.62)	46 (1.81)	73 (2.87)	21 (0.83)	109 (4.29)	256 (10.1)	5360 (1206)
09A□ATA6 09D□ATA6	CNVX-4105	1/6	417 (16.4)	161 (6.34)	115 (4.53)	46 (1.81)	73 (2.87)	21 (0.83)	109 (4.29)	256 (10.1)	3240 (729)

Units: mm (in)

Model SGMGH-	Gear Model	Gear Ratio	L	LL	LM	LT	KB1	KB2	KL1	R	Shaft Center Allowable Radial Load N (lbf)
09A□ATB6 09D□ATB6	CNVX-4105	1/11	417 (16.4)	161 (6.34)	115 (4.53)	46 (1.81)	73 (2.87)	21 (0.83)	109 (4.29)	256 (10.1)	3840 (864)
09A□ATC6 09D□ATC6	CNVX-4115	1/21	449 (17.7)	161 (6.34)	115 (4.53)	46 (1.81)	73 (2.87)	21 (0.83)	109 (4.29)	288 (11.3)	6190 (1393)
09A□AT76 09D□AT76	CNVX-4115	1/29	449 (17.7)	161 (6.34)	115 (4.53)	46 (1.81)	73 (2.87)	21 (0.83)	109 (4.29)	288 (11.3)	6870 (1546)
13A□ATA6 13D□ATA6	CNVX-4105	1/6	441 (17.4)	185 (7.28)	139 (5.47)	46 (1.81)	73 (2.87)	21 (0.83)	109 (4.29)	256 (10.1)	3240 (729)
13A□ATB6 13D□ATB6	CNVX-4115	1/11	473 (18.6)	185 (7.28)	139 (5.47)	46 (1.81)	73 (2.87)	21 (0.83)	109 (4.29)	288 (11.3)	4970 (1119)
13A□ATC6 13D□ATC6	CNVX-4115	1/21	473 (18.6)	185 (7.28)	139 (5.47)	46 (1.81)	73 (2.87)	21 (0.83)	109 (4.29)	288 (11.3)	6190 (1393)
20A□ATA6 20D□ATA6	CNVX-4115	1/6	477 (18.8)	166 (6.54)	119 (4.69)	47 (1.85)	77 (3.03)	22 (0.87)	140 (5.51)	311 (12.2)	4050 (911)
20A□ATB6 20D□ATB6	CNVX-4115	1/11	477 (18.8)	166 (6.54)	119 (4.69)	47 (1.85)	77 (3.03)	22 (0.87)	140 (5.51)	311 (12.2)	4970 (1119)
30A□ATA6 30D□ATA6	CNVX-4115	1/6	503 (19.8)	192 (7.56)	145 (5.71)	47 (1.85)	77 (3.03)	22 (0.87)	140 (5.51)	311 (12.2)	4050 (911)
30A□ATB6 30D□ATB6	CNVX-4115	1/11	503 (19.8)	192 (7.56)	145 (5.71)	47 (1.85)	77 (3.03)	22 (0.87)	140 (5.51)	311 (12.2)	4970 (1119)

Model SGMGH-	Gear Ratio	Flange Face Dimensions mm (in)										Shaft-end Dimensions mm (in)				Approx. Mass kg (lb)
		LA	LB	LC	LE	LG	LR	N	Q	QK	S	T	U	W	Tap × Depth	
05A□ATA6 05D□ATA6	1/6	134 (5.28)	110 (4.33)	160 (6.30)	3 (0.12)	9 (0.35)	48 (1.89)	4 (0.16)	35 (1.38)	32 (1.26)	28 (1.10)	7 (0.28)	4 (0.16)	8 (0.31)	M8 × 19	18.5 (40.8)
05A□ATB6 05D□ATB6	1/11	134 (5.28)	110 (4.33)	160 (6.30)	3 (0.12)	9 (0.35)	48 (1.89)	4 (0.16)	35 (1.38)	32 (1.26)	28 (1.10)	7 (0.28)	4 (0.16)	8 (0.31)	M8 × 19	18.5 (40.8)
05A□ATC6 05D□ATC6	1/21	134 (5.28)	110 (4.33)	160 (6.30)	3 (0.12)	9 (0.35)	48 (1.89)	4 (0.16)	35 (1.38)	32 (1.26)	28 (1.10)	7 (0.28)	4 (0.16)	8 (0.31)	M8 × 19	20.5 (45.2)
05A□AT76 05D□AT76	1/29	134 (5.28)	110 (4.33)	160 (6.30)	3 (0.12)	9 (0.35)	48 (1.89)	4 (0.16)	35 (1.38)	32 (1.26)	28 (1.10)	7 (0.28)	4 (0.16)	8 (0.31)	M8 × 19	20.5 (45.2)
09A□ATA6 09D□ATA6	1/6	134 (5.28)	110 (4.33)	160 (6.30)	3 (0.12)	9 (0.35)	48 (1.89)	4 (0.16)	35 (1.38)	32 (1.26)	28 (1.10)	7 (0.28)	4 (0.16)	8 (0.31)	M8 × 19	22.6 (49.8)
09A□ATB6 09D□ATB6	1/11	134 (5.28)	110 (4.33)	160 (6.30)	3 (0.12)	9 (0.35)	48 (1.89)	4 (0.16)	35 (1.38)	32 (1.26)	28 (1.10)	7 (0.28)	4 (0.16)	8 (0.31)	M8 × 19	22.6 (49.8)
09A□ATC6 09D□ATC6	1/21	180 (7.09)	140 (5.51)	210 (8.27)	4 (0.16)	13 (0.51)	69 (2.72)	6 (0.24)	55 (2.17)	50 (1.97)	38 (1.50)	8 (0.31)	5 (0.20)	10 (0.39)	M10 × 22	33.6 (74.1)
09A□AT76 09D□AT76	1/29	180 (7.09)	140 (5.51)	210 (8.27)	4 (0.16)	13 (0.51)	69 (2.72)	6 (0.24)	55 (2.17)	50 (1.97)	38 (1.50)	8 (0.31)	5 (0.20)	10 (0.39)	M10 × 22	33.6 (74.1)
13A□ATA6 13D□ATA6	1/6	134 (5.28)	110 (4.33)	160 (6.30)	3 (0.12)	9 (0.35)	48 (1.89)	4 (0.16)	35 (1.38)	32 (1.26)	28 (1.10)	7 (0.28)	4 (0.16)	8 (0.31)	M8 × 19	24.6 (54.2)
13A□ATB6 13D□ATB6	1/11	180 (7.09)	140 (5.51)	210 (8.27)	4 (0.16)	13 (0.51)	69 (2.72)	6 (0.24)	55 (2.17)	50 (1.97)	38 (1.50)	8 (0.31)	5 (0.20)	10 (0.39)	M10 × 22	35.6 (78.5)

3.14.5 SGMGH Servomotors (1500min^{-1}) With Standard Backlash Gears and Without Brakes (Flange-mounted Type)

Model SGMGH-	Gear Ratio	Flange Face Dimensions mm (in)										Shaft-end Dimensions mm (in)				Approx. Mass kg (lb)
		LA	LB	LC	LE	LG	LR	N	Q	QK	S	T	U	W	Tap × Depth	
13A□ATC6 13D□ATC6	1/21	180 (7.09)	140 (5.51)	210 (8.27)	4 (0.16)	13 (0.51)	69 (2.72)	6 (0.24)	55 (2.17)	50 (1.97)	38 (1.50)	8 (0.31)	5 (0.20)	10 (0.39)	M10 × 22	35.6 (78.5)
20A□ATA6 20D□ATA6	1/6	180 (7.09)	140 (5.51)	210 (8.27)	4 (0.16)	13 (0.51)	69 (2.72)	6 (0.24)	55 (2.17)	50 (1.97)	38 (1.50)	8 (0.31)	5 (0.20)	10 (0.39)	M10 × 22	42 (92.6)
20A□ATB6 20D□ATB6	1/11	180 (7.09)	140 (5.51)	210 (8.27)	4 (0.16)	13 (0.51)	69 (2.72)	6 (0.24)	55 (2.17)	50 (1.97)	38 (1.50)	8 (0.31)	5 (0.20)	10 (0.39)	M10 × 22	42 (92.6)
30A□ATA6 30D□ATA6	1/6	180 (7.09)	140 (5.51)	210 (8.27)	4 (0.16)	13 (0.51)	69 (2.72)	6 (0.24)	55 (2.17)	50 (1.97)	38 (1.50)	8 (0.31)	5 (0.20)	10 (0.39)	M10 × 22	46 (101)
30A□ATB6 30D□ATB6	1/11	180 (7.09)	140 (5.51)	210 (8.27)	4 (0.16)	13 (0.51)	69 (2.72)	6 (0.24)	55 (2.17)	50 (1.97)	38 (1.50)	8 (0.31)	5 (0.20)	10 (0.39)	M10 × 22	46 (101)

- Dimensional Tolerances

Units: mm (in)

Model SGMGH-	Flange Face Dimensions	Shaft-end Dimensions
	LB	S
05A□ATA6 05D□ATA6	$110^{-0.036}_{-0.090}\left(4.33^{-0.0014}_{-0.0035}\right)$	$28^{0}_{-0.013}\left(1.10^{0}_{-0.0005}\right)$
05A□ATB6 05D□ATB6	$110^{-0.036}_{-0.090}\left(4.33^{-0.0014}_{-0.0035}\right)$	$28^{0}_{-0.013}\left(1.10^{0}_{-0.0005}\right)$
05A□ATC6 05D□ATC6	$110^{-0.036}_{-0.090}\left(4.33^{-0.0014}_{-0.0035}\right)$	$28^{0}_{-0.013}\left(1.10^{0}_{-0.0005}\right)$
05A□AT76 05D□AT76	$110^{-0.036}_{-0.090}\left(4.33^{-0.0014}_{-0.0035}\right)$	$28^{0}_{-0.013}\left(1.10^{0}_{-0.0005}\right)$
09A□ATA6 09D□ATA6	$110^{-0.036}_{-0.090}\left(4.33^{-0.0014}_{-0.0035}\right)$	$28^{0}_{-0.013}\left(1.10^{0}_{-0.0005}\right)$
09A□ATB6 09D□ATB6	$110^{-0.036}_{-0.090}\left(4.33^{-0.0014}_{-0.0035}\right)$	$28^{0}_{-0.013}\left(1.10^{0}_{-0.0005}\right)$
09A□ATC6 09D□ATC6	$140^{-0.043}_{-0.106}\left(5.51^{-0.0017}_{-0.0042}\right)$	$38^{0}_{-0.016}\left(1.50^{0}_{-0.0006}\right)$
09A□AT76 09D□AT76	$140^{-0.043}_{-0.106}\left(5.51^{-0.0017}_{-0.0042}\right)$	$38^{0}_{-0.016}\left(1.50^{0}_{-0.0006}\right)$
13A□ATA6 13D□ATA6	$110^{-0.036}_{-0.090}\left(4.33^{-0.0014}_{-0.0035}\right)$	$28^{0}_{-0.013}\left(1.10^{0}_{-0.0005}\right)$
13A□ATB6 13D□ATB6	$140^{-0.043}_{-0.106}\left(5.51^{-0.0017}_{-0.0042}\right)$	$38^{0}_{-0.016}\left(1.50^{0}_{-0.0006}\right)$
13A□ATC6 13D□ATC6	$140^{-0.043}_{-0.106}\left(5.51^{-0.0017}_{-0.0042}\right)$	$38^{0}_{-0.016}\left(1.50^{0}_{-0.0006}\right)$
20A□ATA6 20D□ATA6	$140^{-0.043}_{-0.106}\left(5.51^{-0.0017}_{-0.0042}\right)$	$38^{0}_{-0.016}\left(1.50^{0}_{-0.0006}\right)$
20A□ATB6 20D□ATB6	$140^{-0.043}_{-0.106}\left(5.51^{-0.0017}_{-0.0042}\right)$	$38^{0}_{-0.016}\left(1.50^{0}_{-0.0006}\right)$
30A□ATA6 30D□ATA6	$140^{-0.043}_{-0.106}\left(5.51^{-0.0017}_{-0.0042}\right)$	$38^{0}_{-0.016}\left(1.50^{0}_{-0.0006}\right)$

Units: mm (in)

Model SGMGH-	Flange Face Dimensions	Shaft-end Dimensions
	LB	S
30A□ATB6	$140^{-0.043}_{-0.106}\left(5.51^{-0.0017}_{-0.0042}\right)$	$38^{0}_{-0.016}\left(1.50^{0}_{-0.0006}\right)$
30D□ATB6		

INFO

■ Lubrication

- Grease lubricating type (frame numbers: 4095 to 4115)
  Since grease has been filled prior to shipment, the servomotors can be used without replenishing grease.

(2) Small Oil Lubricating Type

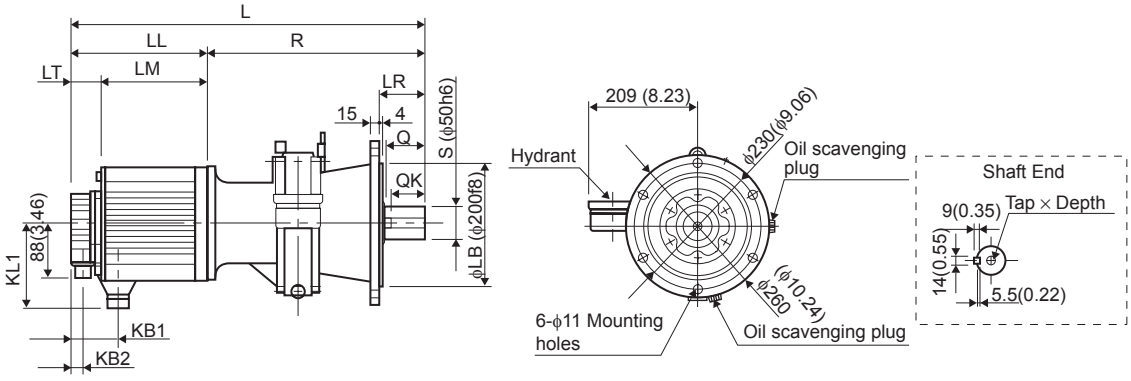

Units: mm (in)

Model SGMGH-	Gear Model	Gear Ratio	L	LL	LM	LT	KB1	KB2	KL1	R	Shaft Center Allowable Radial Load N (lbf)
13A□AT76	CHVX-4135	1/29	532 (20.9)	185 (7.28)	139 (5.47)	46 (1.81)	73 (2.87)	21 (0.83)	109 (4.29)	347 (13.7)	9900 (2228)
13D□AT76											
20A□ATC6	CHVX-4130	1/21	536 (21.1)	166 (6.54)	119 (4.69)	47 (1.85)	77 (3.03)	22 (0.87)	140 (5.51)	370 (14.6)	8940 (2012)
20D□ATC6											
20A□AT76	CHVX-4135	1/29	536 (21.1)	166 (6.54)	119 (4.69)	47 (1.85)	77 (3.03)	22 (0.87)	140 (5.51)	370 (14.6)	9900 (2228)
20D□AT76											
30A□ATC6	CHVX-4145	1/21	582 (22.9)	192 (7.56)	145 (5.71)	47 (1.85)	77 (3.03)	22 (0.87)	140 (5.51)	390 (15.4)	11590 (2608)
30D□ATC6											
44A□ATA6	CHVX-4130	1/6	596 (23.5)	226 (8.90)	179 (7.05)	47 (1.85)	77 (3.03)	22 (0.87)	140 (5.51)	370 (14.6)	5870 (1321)
44A□ATB6	CHVX-4135	1/11	596 (23.5)	226 (8.90)	179 (7.05)	47 (1.85)	77 (3.03)	22 (0.87)	140 (5.51)	370 (14.6)	7190 (1618)
55A□ATA6	CHVX-4135	1/6	664 (26.1)	260 (10.2)	213 (8.39)	47 (1.85)	86 (3.39)	22 (0.87)	150 (5.91)	404 (15.9)	5870 (1321)
55A□ATB6	CHVX-4145	1/11	684 (26.9)	260 (10.2)	213 (8.39)	47 (1.85)	86 (3.39)	22 (0.87)	150 (5.91)	424 (16.7)	9500 (2138)

3.14.5 SGMGH Servomotors (1500min^{-1}) With Standard Backlash Gears and Without Brakes (Flange-mounted Type)

Model SGMGH-	Gear Ratio	Flange Face Dimensions mm (in)	Shaft-end Dimensions mm (in)			Approx. Mass kg (lb)
		LR	Q	QK	Tap×Depth	
13A□AT76 13D□AT76	1/29	76 (2.99)	70 (2.76)	56 (2.20)	M10 × 18	56.6 (125)
20A□ATC6 20D□ATC6	1/21	76 (2.99)	70 (2.76)	56 (2.20)	M10 × 18	66 (146)
20A□AT76 20D□AT76	1/29	76 (2.99)	70 (2.76)	56 (2.20)	M10 × 18	66 (146)
30A□ATC6 30D□ATC6	1/21	96 (3.78)	90 (3.54)	80 (3.15)	M10 × 18	71 (157)
44A□ATA6	1/6	76 (2.99)	70 (2.76)	56 (2.20)	M10 × 18	75 (165)
44A□ATB6	1/11	76 (2.99)	70 (2.76)	56 (2.20)	M10 × 18	75 (165)
55A□ATA6	1/6	76 (2.99)	70 (2.76)	56 (2.2)	M10 × 18	87 (192)
55A□ATB6	1/11	96 (3.78)	90 (3.54)	80 (3.15)	M10 × 18	88 (194)

- Dimensional Tolerances

Units: mm (in)

Model SGMGH-	Flange Face Dimensions	Shaft-end Dimensions
	LB	S
13A□AT76 13D□AT76	$200^{-0.050}_{-0.122}\left(7.87^{-0.0020}_{-0.0048}\right)$	$50^{0}_{-0.016}\left(1.97^{0}_{-0.0006}\right)$
20A□ATC6 20D□ATC6	$200^{-0.050}_{-0.122}\left(7.87^{-0.0020}_{-0.0048}\right)$	$50^{0}_{-0.016}\left(1.97^{0}_{-0.0006}\right)$
20A□AT76 20D□AT76	$200^{-0.050}_{-0.122}\left(7.87^{-0.0020}_{-0.0048}\right)$	$50^{0}_{-0.016}\left(1.97^{0}_{-0.0006}\right)$
30A□ATC6 30D□ATC6	$200^{-0.050}_{-0.122}\left(7.87^{-0.0020}_{-0.0048}\right)$	$50^{0}_{-0.016}\left(1.97^{0}_{-0.0006}\right)$
44A□ATA6	$200^{-0.050}_{-0.137}\left(7.87^{-0.0020}_{-0.0054}\right)$	$50^{0}_{-0.016}\left(1.97^{0}_{-0.0006}\right)$
44A□ATB6	$200^{-0.050}_{-0.122}\left(7.87^{-0.0020}_{-0.0048}\right)$	$50^{0}_{-0.016}\left(1.97^{0}_{-0.0006}\right)$
55A□ATA6	$200^{-0.050}_{-0.122}\left(7.87^{-0.0020}_{-0.0048}\right)$	$50^{0}_{-0.016}\left(1.97^{0}_{-0.0006}\right)$
55A□ATB6	$200^{-0.050}_{-0.122}\left(7.87^{-0.0020}_{-0.0048}\right)$	$50^{0}_{-0.016}\left(1.97^{0}_{-0.0006}\right)$

INFO

■ Lubrication

- Oil lubricating type (frame numbers: 4130 to 4190)

  Servomotors of this type have been shipped with oil removed. Be sure to supply oil until the red line at the upper side of the oil gauge.

  Lubrication oil recommended is industrial-use extreme-pressure gear oil of SP-system, JIS K 2219 industrial-use gear oil or equivalent. Refer to the following table.

Ambient Temperature	Manufacturer		
	COSMO Oil Co., Ltd.	Nippon Oil Co., Ltd.	Tonen General Sekiyu K. K.
0 to 35 °C (32 to 95 °F)	COSMO Gear SE 100, 150	BON-NOCK M 100, 150	GENERAL SP Gear Roll 100, 150

The following shows approximate oil amount to be supplied.

Units: liter

Frame No.	4130 4135	4145	4155	4160 4165	4170 4175	4180 4185	4190
Horizontal type	0.7	0.7	0.7	1.4	1.9	2.5	4.0

3

(3) Large Oil Lubricating Type

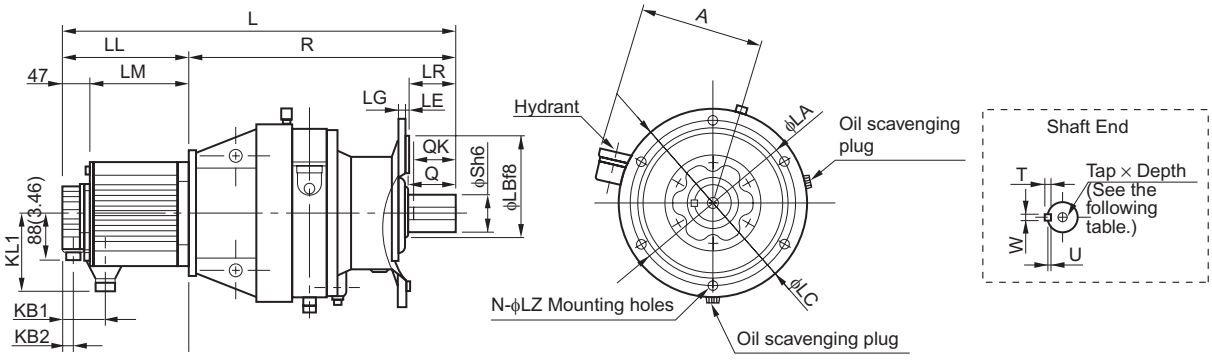

Units: mm (in)

Model SGMGH-	Gear Model	Gear Ratio	L	LL	LM	KB1	KB2	KL1	R	A	Shaft Center Allowable Radial Load N (lbf)
30A□AT76 30D□AT76	CHVJ-4160	1/29	687 (27.1)	192 (7.56)	145 (5.71)	77 (3.03)	22 (0.87)	140 (5.51)	495 (19.5)	228 (8.98)	16290 (3665)
44A□ATC6	CHVJ-4160	1/21	721 (28.4)	226 (8.90)	179 (7.05)	77 (3.03)	22 (0.87)	140 (5.51)	495 (19.5)	228 (8.98)	14640 (3294)
44A□AT76	CHVJ-4170	1/29	785 (30.9)	226 (8.90)	179 (7.05)	77 (3.03)	22 (0.87)	140 (5.51)	559 (22.0)	243 (9.57)	19020 (4280)
55A□ATC6	CHVJ-4170	1/21	853 (33.6)	260 (10.2)	213 (8.39)	86 (3.39)	22 (0.87)	150 (5.91)	593 (23.3)	243 (9.57)	17180 (3866)
55A□AT76	CHVJ-4175	1/29	853 (33.6)	260 (10.2)	213 (8.39)	86 (3.39)	22 (0.87)	150 (5.91)	593 (23.3)	243 (9.57)	19020 (4280)
75A□ATB6	CHVJ-4160	1/11	863 (34.0)	334 (13.1)	287 (11.3)	86 (3.39)	22 (0.87)	150 (5.91)	529 (20.8)	228 (8.98)	11740 (2642)

3.14.5 SGMGH Servomotors (1500min^{-1}) With Standard Backlash Gears and Without Brakes (Flange-mounted Type)

Units: mm (in)

Model SGMGH-	Gear Model	Gear Ratio	L	LL	LM	KB1	KB2	KL1	R	A	Shaft Center Allowable Radial Load N (lbf)
75A□ATC6	CHVJ-4175	1/21	927 (36.5)	334 (13.1)	287 (11.3)	86 (3.39)	22 (0.87)	150 (5.91)	593 (23.3)	243 (9.57)	17180 (3866)
75A□AT76	CHVJ-4180	1/29	977 (38.5)	334 (13.1)	287 (11.3)	86 (3.39)	22 (0.87)	150 (5.91)	643 (25.3)	258 (10.2)	25600 (5760)
1AA□ATB6	CHVJ-4170	1/11	934 (36.8)	338 (13.3)	291 (11.5)	87 (3.43)	21 (0.83)	168 (6.61)	596 (23.5)	243 (9.57)	13800 (3105)
1AA□ATC6	CHVJ-4185	1/21	984 (38.7)	338 (13.3)	291 (11.5)	87 (3.43)	21 (0.83)	168 (6.61)	646 (25.4)	258 (10.2)	23010 (5177)
1AA□AT76	CHVJ-4190	1/29	1077 (42.4)	338 (13.3)	291 (11.5)	87 (3.43)	21 (0.83)	168 (6.61)	739 (29.1)	285 (11.2)	35810 (8057)

Model SGMGH-	Gear Ratio	Flange Face Dimensions mm (in)								Shaft-end Dimensions mm (in)							Approx. Mass kg (lb)
		LA	LB	LC	LE	LG	LR	N	LZ	Q	QK	S	T	U	W	Tap × Depth	
30A□AT76 30D□AT76	1/29	310 (12.2)	270 (10.6)	340 (13.4)	4 (0.16)	20 (0.79)	89 (3.50)	6 (0.24)	11 (0.43)	90 (3.54)	80 (3.15)	60 (2.36)	11 (0.43)	7 (0.28)	18 (0.71)	M10 × 18	121 (267)
44A□ATC6	1/21	310 (12.2)	270 (10.6)	340 (13.4)	4 (0.16)	20 (0.79)	89 (3.50)	6 (0.24)	11 (0.43)	90 (3.54)	80 (3.15)	60 (2.36)	11 (0.43)	7 (0.28)	18 (0.71)	M10 × 18	126 (278)
44A□AT76	1/29	360 (14.2)	316 (12.4)	400 (15.7)	5 (0.20)	22 (0.87)	94 (3.70)	8 (0.31)	14 (0.55)	90 (3.54)	80 (3.15)	70 (2.76)	12 (0.47)	7.5 (0.30)	20 (0.79)	M12 × 24	176 (388)
55A□ATC6	1/21	360 (14.2)	316 (12.4)	400 (15.7)	5 (0.20)	22 (0.87)	94 (3.70)	8 (0.31)	14 (0.55)	90 (3.54)	80 (3.15)	70 (2.76)	12 (0.47)	7.5 (0.30)	20 (0.79)	M12 × 24	191 (421)
55A□AT76	1/29	360 (14.2)	316 (12.4)	400 (15.7)	5 (0.20)	22 (0.87)	94 (3.70)	8 (0.31)	14 (0.55)	90 (3.54)	80 (3.15)	70 (2.76)	12 (0.47)	7.5 (0.30)	20 (0.79)	M12 × 24	191 (421)
75A□ATB6	1/11	310 (12.2)	270 (10.6)	340 (13.4)	4 (0.16)	20 (0.79)	89 (3.50)	6 (0.24)	11 (0.43)	90 (3.54)	80 (3.15)	60 (2.36)	11 (0.43)	7 (0.28)	18 (0.71)	M10 × 18	150 (331)
75A□ATC6	1/21	360 (14.2)	316 (12.4)	400 (15.7)	5 (0.20)	22 (0.87)	94 (3.70)	8 (0.31)	14 (0.55)	90 (3.54)	80 (3.15)	70 (2.76)	12 (0.47)	7.5 (0.3)	20 (0.79)	M12 × 24	201 (443)
75A□AT76	1/29	390 (15.4)	345 (13.6)	430 (16.9)	5 (0.20)	22 (0.87)	110 (4.33)	8 (0.31)	18 (0.71)	110 (4.33)	100 (3.94)	80 (3.15)	14 (0.55)	9 (0.35)	22 (0.87)	M12 × 24	232 (511)
1AA□ATB6	1/11	360 (14.2)	316 (12.4)	400 (15.7)	5 (0.20)	22 (0.87)	94 (3.70)	8 (0.31)	14 (0.55)	90 (3.54)	80 (3.15)	70 (2.76)	12 (0.47)	7.5 (0.30)	20 (0.79)	M12 × 24	230.5 (508)
1AA□ATC 6	1/21	390 (15.4)	345 (13.6)	430 (16.9)	5 (0.20)	22 (0.87)	110 (4.33)	8 (0.31)	18 (0.71)	110 (4.33)	100 (3.94)	80 (3.15)	14 (0.55)	9 (0.35)	22 (0.87)	M12 × 24	263.5 (580.9)
1AA□AT76	1/29	450 (17.7)	400 (15.7)	490 (19.3)	6 (0.24)	30 (1.18)	145 (5.71)	12 (0.47)	18 (0.71)	135 (5.31)	125 (4.92)	95 (3.74)	14 (0.55)	9 (0.35)	25 (0.98)	M20 × 34	342.5 (755)

- Dimensional Tolerances

Units: mm (in)

Model SGMGH-	Flange Face Dimensions	Shaft-end Dimensions
	LB	S
30A□AT76 30D□AT76	$270^{-0.056}_{-0.137}\left(10.6^{-0.0022}_{-0.0054}\right)$	$60^{0}_{-0.019}\left(2.36^{0}_{-0.0007}\right)$
44A□ATC6	$270^{-0.056}_{-0.137}\left(10.6^{-0.0022}_{-0.0054}\right)$	$60^{0}_{-0.019}\left(2.36^{0}_{-0.0007}\right)$
44A□AT76	$316^{-0.062}_{-0.151}\left(12.4^{-0.0024}_{-0.0059}\right)$	$70^{0}_{-0.019}\left(2.76^{0}_{-0.0007}\right)$
55A□ATC6	$316^{-0.062}_{-0.151}\left(12.4^{-0.0024}_{-0.0059}\right)$	$70^{0}_{-0.019}\left(2.76^{0}_{-0.0007}\right)$
55A□AT76	$316^{-0.062}_{-0.151}\left(12.4^{-0.0024}_{-0.0059}\right)$	$70^{0}_{-0.019}\left(2.76^{0}_{-0.0007}\right)$
75A□ATB6	$270^{-0.056}_{-0.137}\left(10.6^{-0.0020}_{-0.0054}\right)$	$60^{0}_{-0.019}\left(2.36^{0}_{-0.0007}\right)$
75A□ATC6	$316^{-0.062}_{-0.151}\left(12.4^{-0.0024}_{-0.0059}\right)$	$70^{0}_{-0.019}\left(2.76^{0}_{-0.0007}\right)$
75A□AT76	$345^{-0.062}_{-0.151}\left(13.6^{-0.0024}_{-0.0059}\right)$	$80^{0}_{-0.019}\left(3.15^{0}_{-0.0007}\right)$
1AA□ATB6	$316^{-0.062}_{-0.151}\left(12.4^{-0.0024}_{-0.0059}\right)$	$70^{0}_{-0.019}\left(2.76^{0}_{-0.0007}\right)$
1AA□ATC6	$345^{-0.062}_{-0.151}\left(13.6^{-0.0024}_{-0.0059}\right)$	$80^{0}_{-0.019}\left(3.15^{0}_{-0.0007}\right)$
1AA□AT76	$400^{-0.062}_{-0.151}\left(15.7^{-0.0024}_{-0.0059}\right)$	$95^{0}_{-0.022}\left(3.74^{0}_{-0.0009}\right)$

INFO

■ Lubrication

- Oil lubricating type (frame numbers: 4130 to 4190)

  Servomotors of this type have been shipped with oil removed. Be sure to supply oil until the red line at the upper side of the oil gauge.

  Lubrication oil recommended is industrial-use extreme-pressure gear oil of SP-system, JIS K 2219 industrial-use gear oil or equivalent. Refer to the following table.

Ambient Temperature	Manufacturer		
	COSMO Oil Co., Ltd.	Nippon Oil Co., Ltd.	Tonen General Sekiyu K. K.
0 to 35 °C (32 to 95 °F)	COSMO Gear SE 100, 150	BON-NOCK M 100, 150	GENERAL SP Gear Roll 100, 150

The following shows approximate oil amount to be supplied.

Units: liter

Frame No.	4130 4135	4145	4155	4160 4165	4170 4175	4180 4185	4190
Horizontal type	0.7	0.7	0.7	1.4	1.9	2.5	4.0

3.14.6 SGMGH Servomotors (1500min^{-1}) With Low-backlash Gears and Without Brakes (Flange-mounted Type)

(1) Grease Lubricating Type for Small

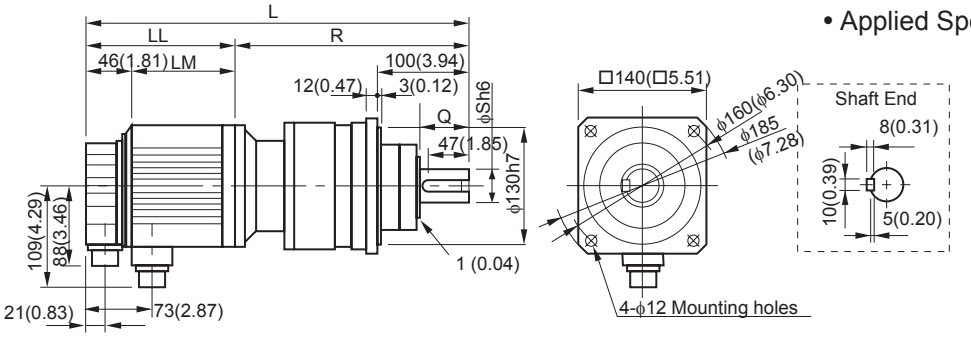

• Applied Specifications of Shaft-end Tap

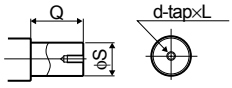

Frame No.	Dia.S	Length Q	d × L mm
ANFJ-L20	35 (1.38)	55 (2.17)	M8 × 16
ANFJ-L30	50 (1.97)	75 (2.95)	M10 × 20
ANFJ-L40	60 (2.36)	90 (3.54)	M12 × 24

• Detailed Dimensions of IMT Gears

ANFJ-L20

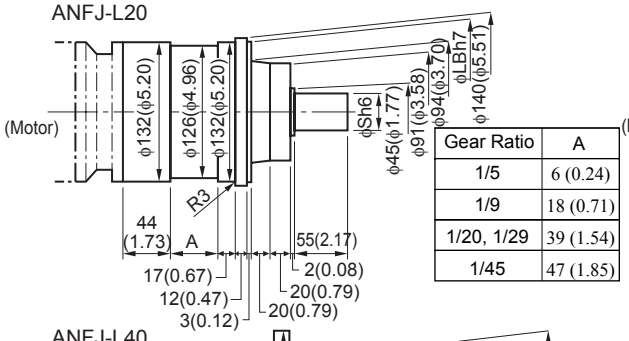

Gear Ratio	A
1/5	6 (0.24)
1/9	18 (0.71)
1/20, 1/29	39 (1.54)
1/45	47 (1.85)

ANFJ-L30

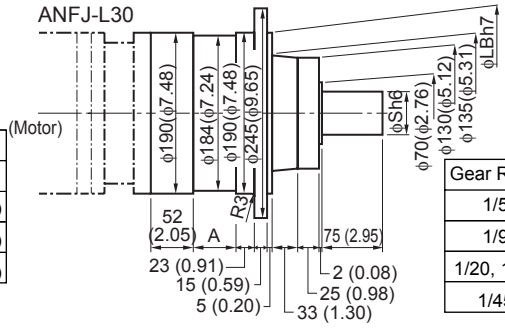

Gear Ratio	A
1/5	11 (0.43)
1/9	38 (1.50)
1/20, 1/29	46 (1.81)
1/45	52 (2.05)

ANFJ-L40

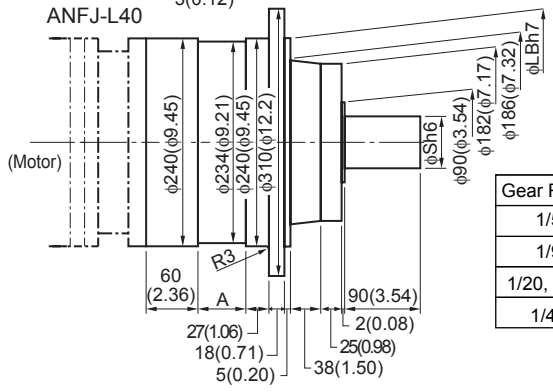

Gear Ratio	A
1/5	16 (0.63)
1/9	48 (1.89)
1/20, 1/29	55 (2.17)
1/45	58 (2.28)

• Dimensional Tolerances

Units: mm (in)

IMT Gear	Flange Face Dimensions	Shaft-end Dimensions
	LB	S
ANFJ-L20	$130^{0}_{-0.040}\left(5.12^{0}_{-0.0016}\right)$	$35^{0}_{-0.016}\left(1.38^{0}_{-0.0006}\right)$
ANFJ-L30	$190^{0}_{-0.046}\left(7.48^{0}_{-0.0018}\right)$	$50^{0}_{-0.016}\left(1.97^{0}_{-0.0006}\right)$
ANFJ-L40	$240^{0}_{-0.046}\left(9.45^{0}_{-0.0018}\right)$	$60^{0}_{-0.019}\left(2.36^{0}_{-0.0007}\right)$

Units: mm (in)

Model SGMGH-	Gear Model	Gear Ratio	L	LL	LM	R	Shaft Center Allowable Radial Load N (lbf)	Approx. Mass kg (lb)
05A□AL14	ANFJ-L20	1/5	394 (15.5)	138 (5.43)	92 (3.62)	256 (10.1)	833 (187)	14 (30.9)
05D□AL14								
05A□AL24		1/9	406 (16.0)	138 (5.43)	92 (3.62)	268 (10.6)	980 (221)	14 (30.9)
05D□AL24								
09A□AL14		1/5	417 (16.4)	161 (6.34)	115 (4.53)	256 (10.1)	833 (187)	16 (35.3)
09D□AL14								
09A□AL24		1/9	429 (16.9)	161 (6.34)	115 (4.53)	268 (10.6)	980 (221)	16 (35.3)
09D□AL24								

INFO

■ Lubrication

- Since grease has been filled prior to shipment, the servomotors can be used without replenishing grease.

3

(2) Large Grease Lubricating Type

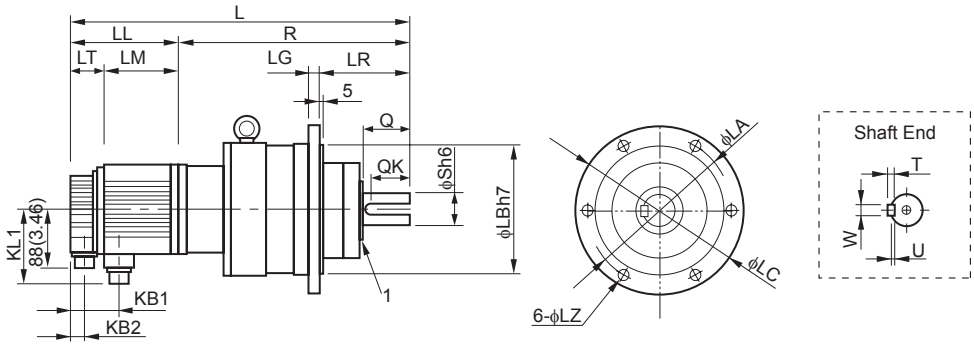

Units: mm (in)

Model SGMGH-	Gear Model	Gear Ratio	L	LB	LL	LM	LR	LT	KB1	KB2	KL1	R	Shaft Center Allowable Radial Load N (lbf)
05A□AL54	ANFJ-L30	1/20	491 (19.3)	190 (7.48)	138 (5.43)	92 (3.62)	140 (5.51)	46 (1.81)	73 (2.87)	21 (0.83)	109 (4.29)	353 (13.9)	2650 (596)
05D□AL54													
05A□AL74		1/29	491 (19.3)	190 (7.48)	138 (5.43)	92 (3.62)	140 (5.51)	46 (1.81)	73 (2.87)	21 (0.83)	109 (4.29)	353 (13.9)	2940 (662)
05D□AL74													
05A□AL84		1/45	501 (19.7)	190 (7.48)	138 (5.43)	92 (3.62)	140 (5.51)	46 (1.81)	73 (2.87)	21 (0.83)	109 (4.29)	363 (14.3)	3430 (772)
05D□AL84													
09A□AL54		1/20	514 (20.2)	190 (7.48)	161 (6.34)	115 (4.53)	140 (5.51)	46 (1.81)	73 (2.87)	21 (0.83)	109 (4.29)	353 (13.9)	2650 (596)
09D□AL54													
09A□AL74		1/29	514 (20.2)	190 (7.48)	161 (6.34)	115 (4.53)	140 (5.51)	46 (1.81)	73 (2.87)	21 (0.83)	109 (4.29)	353 (13.9)	2940 (662)
09D□AL74													
09A□AL84	ANFJ-L40	1/45	565 (22.2)	240 (9.45)	161 (6.34)	115 (4.53)	160 (6.30)	46 (1.81)	73 (2.87)	21 (0.83)	109 (4.29)	404 (15.9)	8040 (1809)
09D□AL84													

3.14.6 SGMGH Servomotors (1500min^{-1}) With Low-backlash Gears and Without Brakes (Flange-mounted Type)

Units: mm (in)

Model SGMGH-	Gear Model	Gear Ratio	L	LB	LL	LM	LR	LT	KB1	KB2	KL1	R	Shaft Center Allowable Radial Load N (lbf)
13A□AL14	ANFJ-L30	1/5	507 (20.0)	190 (7.48)	185 (7.28)	139 (5.47)	140 (5.51)	46 (1.81)	73 (2.87)	21 (0.83)	109 (4.29)	322 (12.7)	1670 (376)
13D□AL14													
13A□AL24		1/9	534 (21.0)	190 (7.48)	185 (7.28)	139 (5.47)	140 (5.51)	46 (1.81)	73 (2.87)	21 (0.83)	109 (4.29)	349 (13.7)	1960 (441)
13D□AL24													
13A□AL54		1/20	538 (21.2)	190 (7.48)	185 (7.28)	139 (5.47)	140 (5.51)	46 (1.81)	73 (2.87)	21 (0.83)	109 (4.29)	353 (13.9)	2650 (596)
13D□AL54													
13A□AL74	ANFJ-L40	1/29	579 (22.8)	240 (9.45)	185 (7.28)	139 (5.47)	160 (6.30)	46 (1.81)	73 (2.87)	21 (0.83)	109 (4.29)	394 (15.5)	6860 (1544)
13D□AL74													
13A□AL84		1/45	589 (23.2)	240 (9.45)	185 (7.28)	139 (5.47)	160 (6.30)	46 (1.81)	73 (2.87)	21 (0.83)	109 (4.29)	404 (15.9)	8040 (1809)
13D□AL84													
20A□AL14	ANFJ-L30	1/5	509 (20.0)	190 (7.48)	166 (6.54)	119 (4.69)	140 (5.51)	47 (1.85)	77 (3.03)	22 (0.87)	140 (5.51)	343 (13.5)	1670 (376)
20D□AL14													
20A□AL24		1/9	536 (21.1)	190 (7.48)	166 (6.54)	119 (4.69)	140 (5.51)	47 (1.85)	77 (3.03)	22 (0.87)	140 (5.51)	370 (14.6)	1960 (441)
20D□AL24													
20A□AL54	ANFJ-L40	1/20	581 (22.9)	240 (9.45)	166 (6.54)	119 (4.69)	160 (6.30)	47 (1.85)	77 (3.03)	22 (0.87)	140 (5.51)	415 (16.3)	6080 (1368)
20D□AL54													
20A□AL74		1/29	581 (22.9)	240 (9.45)	166 (6.54)	119 (4.69)	160 (6.30)	47 (1.85)	77 (3.03)	22 (0.87)	140 (5.51)	415 (16.3)	6860 (1544)
20D□AL74													
30A□AL14		1/5	575 (22.6)	240 (9.45)	192 (7.56)	145 (5.71)	160 (6.30)	47 (1.85)	77 (3.03)	22 (0.87)	140 (5.51)	383 (15.1)	3820 (860)
30D□AL14													
30A□AL24		1/9	607 (23.9)	240 (9.45)	192 (7.56)	145 (5.71)	160 (6.30)	47 (1.85)	77 (3.03)	22 (0.87)	140 (5.51)	415 (16.3)	4700 (1058)
30D□AL24													
30A□AL54		1/20	607 (23.9)	240 (9.45)	192 (7.56)	145 (5.71)	160 (6.30)	47 (1.85)	77 (3.03)	22 (0.87)	140 (5.51)	415 (16.3)	6080 (1368)
30D□AL54													
44A□AL14		1/5	609 (24.0)	240 (9.45)	226 (8.90)	179 (7.05)	160 (6.30)	47 (1.85)	77 (3.03)	22 (0.87)	140 (5.51)	383 (15.1)	3820 (860)
44A□AL24		1/9	641 (25.2)	240 (9.45)	226 (8.90)	179 (7.05)	160 (6.30)	47 (1.85)	77 (3.03)	22 (0.87)	140 (5.51)	415 (16.3)	4700 (1058)

Model SGMGH-	Gear Ratio	Flange Face Dimensions mm (in)					Shaft-end Dimensions mm (in)						Approx. Mass kg (lb)
		LA	LB	LC	LG	LZ	Q	QK	S	T	U	W	
05A□AL54	1/20	220 (8.66)	190 (7.48)	245 (9.65)	15 (0.59)	12 (0.47)	75 (2.95)	65 (2.56)	50 (1.97)	9 (0.35)	5.5 (0.22)	14 (0.55)	31 (68.3)
05D□AL54													
05A□AL74	1/29	220 (8.66)	190 (7.48)	245 (9.65)	15 (0.59)	12 (0.47)	75 (2.95)	65 (2.56)	50 (1.97)	9 (0.35)	5.5 (0.22)	14 (0.55)	31 (68.3)
05D□AL74													
05A□AL84	1/45	220 (8.66)	190 (7.48)	245 (9.65)	15 (0.59)	12 (0.47)	75 (2.95)	65 (2.56)	50 (1.97)	9 (0.35)	5.5 (0.22)	14 (0.55)	31 (68.3)
05D□AL84													
09A□AL54	1/20	220 (8.66)	190 (7.48)	245 (9.65)	15 (0.59)	12 (0.47)	75 (2.95)	65 (2.56)	50 (1.97)	9 (0.35)	5.5 (0.22)	14 (0.55)	33 (72.8)
09D□AL54													
09A□AL74	1/29	220 (8.66)	190 (7.48)	245 (9.65)	15 (0.59)	12 (0.47)	75 (2.95)	65 (2.56)	50 (1.97)	9 (0.35)	5.5 (0.22)	14 (0.55)	33 (72.8)
09D□AL74													
09A□AL84	1/45	280 (11.0)	240 (9.45)	310 (12.2)	18 (0.71)	14 (0.55)	90 (3.54)	78 (3.07)	60 (2.36)	11 (0.43)	7 (0.28)	18 (0.71)	53 (117)
09D□AL84													

Model SGMGH-	Gear Ratio	Flange Face Dimensions mm (in)					Shaft-end Dimensions mm (in)						Approx. Mass kg (lb)
		LA	LB	LC	LG	LZ	Q	QK	S	T	U	W	
13A□AL14 13D□AL14	1/5	220 (8.66)	190 (7.48)	245 (9.65)	15 (0.59)	12 (0.47)	75 (2.95)	65 (2.56)	50 (1.97)	9 (0.35)	5.5 (0.22)	14 (0.55)	28 (61.7)
13A□AL24 13D□AL24	1/9	220 (8.66)	190 (7.48)	245 (9.65)	15 (0.59)	12 (0.47)	75 (2.95)	65 (2.56)	50 (1.97)	9 (0.35)	5.5 (0.22)	14 (0.55)	35 (77.2)
13A□AL54 13D□AL54	1/20	220 (8.66)	190 (7.48)	245 (9.65)	15 (0.59)	12 (0.47)	75 (2.95)	65 (2.56)	50 (1.97)	9 (0.35)	5.5 (0.22)	14 (0.55)	35 (77.2)
13A□AL74 13D□AL74	1/29	280 (11.0)	240 (9.45)	310 (12.2)	18 (0.71)	14 (0.55)	90 (3.54)	78 (3.07)	60 (2.36)	11 (0.43)	7 (0.28)	18 (0.71)	55 (121)
13A□AL84 13D□AL84	1/45	280 (11.0)	240 (9.45)	310 (12.2)	18 (0.71)	14 (0.55)	90 (3.54)	78 (3.07)	60 (2.36)	11 (0.43)	7 (0.28)	18 (0.71)	55 (121)
20A□AL14 20D□AL14	1/5	220 (8.66)	190 (7.48)	245 (9.65)	15 (0.59)	12 (0.47)	75 (2.95)	65 (2.56)	50 (1.97)	9 (0.35)	5.5 (0.22)	14 (0.55)	32 (70.5)
20A□AL24 20D□AL24	1/9	220 (8.66)	190 (7.48)	245 (9.65)	15 (0.59)	12 (0.47)	75 (2.95)	65 (2.56)	50 (1.97)	9 (0.35)	5.5 (0.22)	14 (0.55)	39 (86.0)
20A□AL54 20D□AL54	1/20	280 (11.0)	240 (9.45)	310 (12.2)	18 (0.71)	14 (0.55)	90 (3.54)	78 (3.07)	60 (2.36)	11 (0.43)	7 (0.28)	18 (0.71)	39 (86.0)
20A□AL74 20D□AL74	1/29	280 (11.0)	240 (9.45)	310 (12.2)	18 (0.71)	14 (0.55)	90 (3.54)	78 (3.07)	60 (2.36)	11 (0.43)	7 (0.28)	18 (0.71)	39 (86.0)
30A□AL14 30D□AL14	1/5	280 (11.0)	240 (9.45)	310 (12.2)	18 (0.71)	14 (0.55)	90 (3.54)	78 (3.07)	60 (2.36)	11 (0.43)	7 (0.28)	18 (0.71)	53 (117)
30A□AL24 30D□AL24	1/9	280 (11.0)	240 (9.45)	310 (12.2)	18 (0.71)	14 (0.55)	90 (3.54)	78 (3.07)	60 (2.36)	11 (0.43)	7 (0.28)	18 (0.71)	63 (139)
30A□AL54 30D□AL54	1/20	280 (11.0)	240 (9.45)	310 (12.2)	18 (0.71)	14 (0.55)	90 (3.54)	78 (3.07)	60 (2.36)	11 (0.43)	7 (0.28)	18 (0.71)	63 (139)
44A□AL14	1/5	280 (11.0)	240 (9.45)	310 (12.2)	18 (0.71)	14 (0.55)	90 (3.54)	78 (3.07)	60 (2.36)	11 (0.43)	7 (0.28)	18 (0.71)	58 (128)
44A□AL24	1/9	280 (11.0)	240 (9.45)	310 (12.2)	18 (0.71)	14 (0.55)	90 (3.54)	78 (3.07)	60 (2.36)	11 (0.43)	7 (0.28)	18 (0.71)	68 (150)

INFO

■ Lubrication

- Since grease has been filled prior to shipment, the servomotors can be used without replenishing grease.

3

3.15 Dimensional Drawings of SGMGH Servomotors (1000 min^{-1})

3.15.1 SGMGH Servomotors (1000 min^{-1}) Without Gears and Brakes

Models with oil seals are of the same configuration.

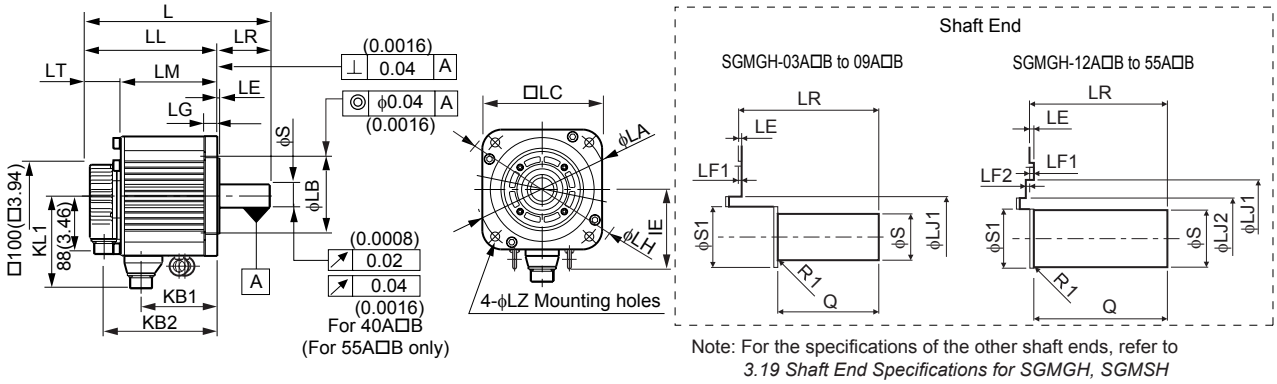

Note: For the specifications of the other shaft ends, refer to *3.19 Shaft End Specifications for SGMGH, SGMSH and SGMDH Servomotors*.

Units: mm (in)

Model SGMGH-	L	LL	LM	LR	LT	KB1	KB2	IE	KL1	Shaft-end Dimensions			Approx. Mass kg (lb)
										S	S1	Q	
03A□B21	196 (7.72)	138 (5.43)	92 (3.62)	58 (2.28)	46 (1.81)	65 (2.56)	117 (4.61)	–	109 (4.29)	$19^{0}_{-0.013}$ $\left(0.75^{0}_{-0.0005}\right)$	30 (1.18)	40 (1.57)	5.5 (12.1)
06A□B21	219 (8.62)	161 (6.34)	115 (4.53)	58 (2.28)	46 (1.81)	88 (3.46)	140 (5.51)	–	109 (4.29)	$19^{0}_{-0.013}$ $\left(0.75^{0}_{-0.0005}\right)$	30 (1.18)	40 (1.57)	7.6 (16.8)
09A□B21	243 (9.57)	185 (7.28)	139 (5.47)	58 (2.28)	46 (1.81)	112 (4.41)	164 (6.46)	–	109 (4.29)	$22^{0}_{-0.013}$ $\left(0.87^{0}_{-0.0005}\right)$	30 (1.18)	40 (1.57)	9.6 (21.2)
12A□B21	245 (9.65)	166 (6.54)	119 (4.69)	79 (3.11)	47 (1.85)	89 (3.50)	145 (5.71)	–	140 (5.51)	$35^{+0.01}_{0}$ $\left(1.38^{+0.0004}_{0}\right)$	45 (1.77)	76 (2.99)	14 (30.9)
20A□B21	271 (10.7)	192 (7.56)	145 (5.71)	79 (3.11)	47 (1.85)	115 (4.53)	170 (6.69)	–	140 (5.51)	$35^{+0.01}_{0}$ $\left(1.38^{+0.0004}_{0}\right)$	45 (1.77)	76 (2.99)	18 (39.7)
30A□B21	305 (12.0)	226 (8.90)	179 (7.05)	79 (3.11)	47 (1.85)	149 (5.87)	204 (8.03)	–	140 (5.51)	$35^{+0.01}_{0}$ $\left(1.38^{+0.0004}_{0}\right)$	45 (1.77)	76 (2.99)	23 (50.7)
40A□B21	373 (14.7)	260 (10.2)	213 (8.39)	113 (4.45)	47 (1.85)	174 (6.85)	238 (9.37)	123 (4.84)	150 (5.91)	$42^{0}_{-0.016}$ $\left(1.65^{0}_{-0.0006}\right)$	45 (1.77)	110 (4.33)	30 (66.1)
55A□B21	447 (17.6)	334 (13.1)	287 (11.3)	113 (4.45)	47 (1.85)	248 (9.76)	312 (12.3)	123 (4.84)	150 (5.91)	$42^{0}_{-0.016}$ $\left(1.65^{0}_{-0.0006}\right)$	45 (1.77)	110 (4.33)	40 (88.2)

Model SGMGH-	Flange Face Dimensions mm (in)											Allowable Radial Load N (lbf)	Allowable Thrust Load N (lbf)
	LA	LB	LC	LE	LF1	LF2	LG	LH	LJ1	LJ2	LZ		
03A□B21	145 (5.71)	$110^{0}_{-0.035}$ ($4.33^{0}_{-0.0014}$)	130 (5.12)	6 (0.24)	6 (0.24)	–	12 (0.47)	165 (6.50)	45 (1.77)	–	9 (0.35)	490 (110)	98 (22)
06A□B21	145 (5.71)	$110^{0}_{-0.035}$ ($4.33^{0}_{-0.0014}$)	130 (5.12)	6 (0.24)	6 (0.24)	–	12 (0.47)	165 (6.50)	45 (1.77)	–	9 (0.35)	490 (110)	98 (22)
09A□B21	145 (5.71)	$110^{0}_{-0.035}$ ($4.33^{0}_{-0.0014}$)	130 (5.12)	6 (0.24)	6 (0.24)	–	12 (0.47)	165 (6.50)	45 (1.77)	–	9 (0.35)	686 (154)	343 (77)
12A□B21	200 (7.87)	$114.3^{0}_{-0.025}$ ($4.50^{0}_{-0.0010}$)	180 (7.09)	3.2 (0.13)	3 (0.12)	0.5 (0.02)	18 (0.71)	230 (9.06)	76 (2.99)	62 (2.44)	13.5 (0.53)	1176 (265)	490 (110)
20A□B21	200 (7.87)	$114.3^{0}_{-0.025}$ ($4.50^{0}_{-0.0010}$)	180 (7.09)	3.2 (0.13)	3 (0.12)	0.5 (0.02)	18 (0.71)	230 (9.06)	76 (2.99)	62 (2.44)	13.5 (0.53)	1470 (331)	490 (110)
30A□B21	200 (7.87)	$114.3^{0}_{-0.025}$ ($4.50^{0}_{-0.0010}$)	180 (7.09)	3.2 (0.13)	3 (0.12)	0.5 (0.02)	18 (0.71)	230 (9.06)	76 (2.99)	62 (2.44)	13.5 (0.53)	1470 (331)	490 (110)
40A□B21	200 (7.87)	$114.3^{0}_{-0.025}$ ($4.50^{0}_{-0.0010}$)	180 (7.09)	3.2 (0.13)	3 (0.12)	0.5 (0.02)	18 (0.71)	230 (9.06)	76 (2.99)	62 (2.44)	13.5 (0.53)	1764 (397)	588 (132)
55A□B21	200 (7.87)	$114.3^{0}_{-0.025}$ ($4.50^{0}_{-0.0010}$)	180 (7.09)	3.2 (0.13)	3 (0.12)	0.5 (0.02)	18 (0.71)	230 (9.06)	76 (2.99)	62 (2.44)	13.5 (0.53)	1764 (397)	588 (132)

- Cable Specifications for Detector Connectors (17-bit Encoder)

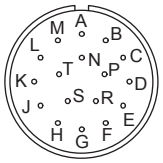

Receptacle: MS3102A20-29P
Applicable plug (Purchased by the customer)
Plug: MS3108B20-29S
Cable clamp: MS3057-12A

With an Absolute Encoder

A	–	K	–
B	–	L	–
C	DATA+	M	–
D	DATA-	N	–
E	–	P	–
F	–	R	–
G	0V	S	BATT-
H	+5VDC	T	BATT+
J	FG (Frame ground)	–	–

With an Incremental Encoder

A	–	K	–
B	–	L	–
C	DATA+	M	–
D	DATA-	N	–
E	–	P	–
F	–	R	–
G	0V	S	–
H	+5VDC	T	–
J	FG (Frame ground)	–	–

- Cable Specifications for Servomotor Connectors

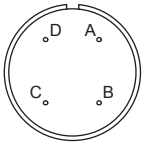

A	Phase U
B	Phase V
C	Phase W
D	FG (Frame ground)

3

3.15.2 SGMGH Servomotors (1000 min^{-1}) Without Gears and With Brakes

(1) 300W to 3.0kW

Models with oil seals are of the same configuration.

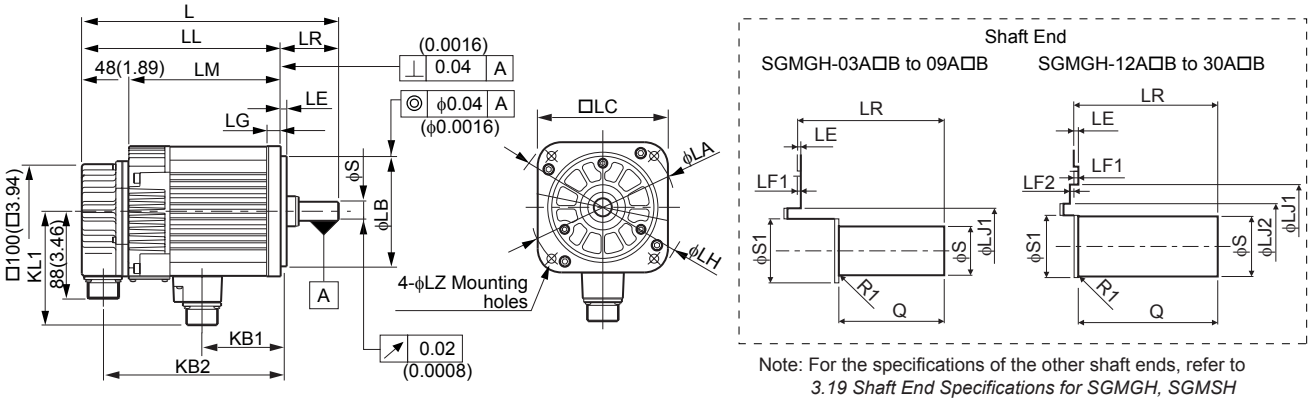

Note: For the specifications of the other shaft ends, refer to *3.19 Shaft End Specifications for SGMGH, SGMSH and SGMDH Servomotors*.

Units: mm (in)

Model SGMGH-	L	LL	LM	LR	KB1	KB2	KL1	Shaft-end Dimensions			Approx. Mass kg (lb)
								S	S1	Q	
03A□B2□	234 (9.21)	176 (6.93)	130 (5.12)	58 (2.28)	56 (2.20)	154 (6.06)	120 (4.72)	$19^{0}_{-0.013}$ $\left(0.75^{0}_{-0.0005}\right)$	30 (1.18)	40 (1.57)	7.5 (16.5)
06A□B2□	257 (10.1)	199 (7.83)	153 (6.02)	58 (2.28)	79 (3.11)	177 (6.97)	120 (4.72)	$19^{0}_{-0.013}$ $\left(0.75^{0}_{-0.0005}\right)$	30 (1.18)	40 (1.57)	9.6 (21.2)
09A□B2□	281 (11.1)	223 (8.78)	177 (6.97)	58 (2.28)	103 (4.06)	201 (7.91)	120 (4.72)	$22^{0}_{-0.013}$ $\left(0.87^{0}_{-0.0005}\right)$	30 (1.18)	40 (1.57)	12 (26.5)
12A□B2□	296 (11.7)	217 (8.54)	169 (6.65)	79 (3.11)	79 (3.11)	195 (7.68)	146 (5.75)	$35^{+0.01}_{0}$ $\left(1.38^{+0.0004}_{0}\right)$	45 (1.77)	76 (2.99)	19 (41.9)
20A□B2□	322 (12.7)	243 (9.57)	195 (7.68)	79 (3.11)	105 (4.13)	221 (8.70)	146 (5.75)	$35^{+0.01}_{0}$ $\left(1.38^{+0.0004}_{0}\right)$	45 (1.77)	76 (2.99)	23.5 (51.8)
30A□B2□	356 (14.0)	277 (10.9)	229 (9.02)	79 (3.11)	139 (5.47)	255 (10.0)	146 (5.75)	$35^{+0.01}_{0}$ $\left(1.38^{+0.0004}_{0}\right)$	45 (1.77)	76 (2.99)	28.5 (62.8)

Model SGMGH-	Flange Face Dimensions mm (in)											Allowable Radial Load N (lbf)	Allowable Thrust Load N (lbf)
	LA	LB	LC	LE	LF1	LF2	LG	LH	LJ1	LJ2	LZ		
03A□B2□	145 (5.71)	$110^{0}_{-0.035}$ $\left(4.33^{0}_{-0.0014}\right)$	130 (5.12)	6 (0.24)	6 (0.24)	-	12 (0.47)	165 (6.50)	45 (1.77)	-	9 (0.35)	490 (110)	98 (22)

Model SGMGH-	Flange Face Dimensions mm (in)											Allowable Radial Load N (lbf)	Allowable Thrust Load N (lbf)
	LA	LB	LC	LE	LF1	LF2	LG	LH	LJ1	LJ2	LZ		
06A□B2□	145 (5.71)	$110^{0}_{-0.035}$ ($4.33^{0}_{-0.0014}$)	130 (5.12)	6 (0.24)	6 (0.24)	-	12 (0.47)	165 (6.50)	45 (1.77)	-	9 (0.35)	490 (110)	98 (22)
09A□B2□	145 (5.71)	$110^{0}_{-0.035}$ ($4.33^{0}_{-0.0014}$)	130 (5.12)	6 (0.24)	6 (0.24)	-	12 (0.47)	165 (6.50)	45 (1.77)	-	9 (0.35)	686 (154)	343 (77)
12A□B2□	200 (7.87)	$114.3^{0}_{-0.025}$ ($4.50^{0}_{-0.0010}$)	180 (7.09)	3.2 (0.13)	3 (0.12)	0.5 (0.02)	18 (0.71)	230 (9.06)	76 (2.99)	62 (2.44)	13.5 (0.53)	1176 (265)	490 (110)
20A□B2□	200 (7.87)	$114.3^{0}_{-0.025}$ ($4.50^{0}_{-0.0010}$)	180 (7.09)	3.2 (0.13)	3 (0.12)	0.5 (0.02)	18 (0.71)	230 (9.06)	76 (2.99)	62 (2.44)	13.5 (0.53)	1470 (331)	490 (110)
30A□B2□	200 (7.87)	$114.3^{0}_{-0.025}$ ($4.50^{0}_{-0.0010}$)	180 (7.09)	3.2 (0.13)	3 (0.12)	0.5 (0.02)	18 (0.71)	230 (9.06)	76 (2.99)	62 (2.44)	13.5 (0.53)	1470 (331)	490 (110)

3

- Cable Specifications for Detector Connectors (17-bit Encoder)

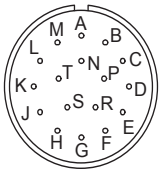

Receptacle: MS3102A20-29P
Applicable plug (Purchased by the customer)
Plug: MS3108B20-29S
Cable clamp: MS3057-12A

With an Absolute Encoder

A	–	K	–
B	–	L	–
C	DATA+	M	–
D	DATA-	N	–
E	–	P	–
F	–	R	–
G	0V	S	BATT-
H	+5VDC	T	BATT+
J	FG (Frame ground)	–	–

- Cable Specifications for Servomotor Connectors

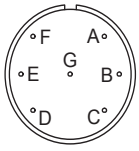

A	Phase U	E	Brake terminal
B	Phase V	F	Brake terminal
C	Phase W	G	–
D	FG (Frame ground)	–	–

With an Incremental Encoder

A	–	K	–
B	–	L	–
C	DATA+	M	–
D	DATA-	N	–
E	–	P	–
F	–	R	–
G	0V	S	–
H	+5VDC	T	–
J	FG (Frame ground)	–	–

(2) 4.0 kW to 5.5 kW

Models with oil seals are of the same configuration.

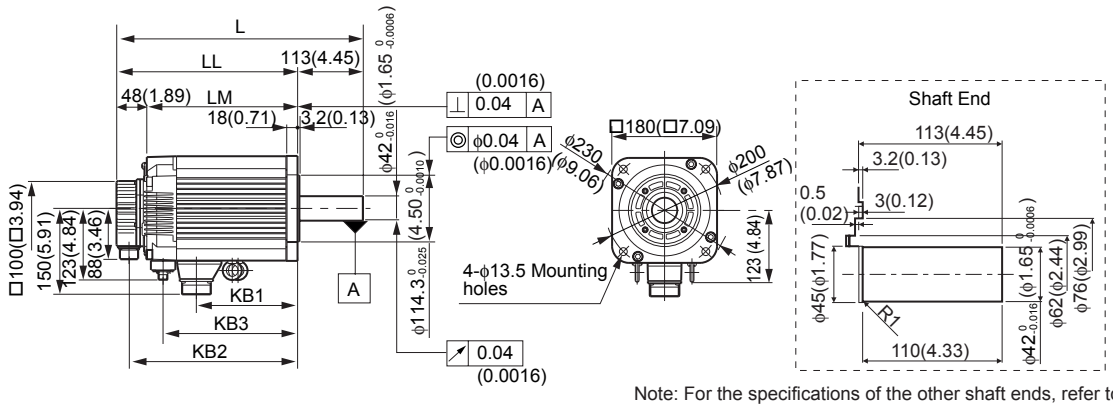

Note: For the specifications of the other shaft ends, refer to *3.19 Shaft End Specifications for SGMGH, SGMSH and SGMDH Servomotors*.

Units: mm (in)

Model SGMGH-	L	LL	LM	KB1	KB2	KB3	Approx. Mass kg (lb)	Allowable Radial Load N (lbf)	Allowable Thrust Load N (lbf)
40A□B2□	424 (16.7)	311 (12.2)	263 (10.4)	174 (6.85)	289 (11.4)	231 (9.09)	35 (77.2)	1764 (397)	588 (132)
55A□B2□	498 (19.6)	385 (15.2)	337 (13.3)	248 (9.76)	363 (14.3)	305 (12.0)	45.5 (100)		

• Cable Specifications for Detector Connectors (17-bit Encoder)

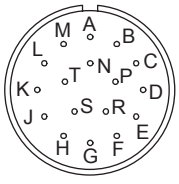

Receptacle: MS3102A20-29P
Applicable plug (Purchased by the customer)
Plug: MS3108B20-29S
Cable clamp: MS3057-12A

With an Absolute Encoder

A	–	K	–
B	–	L	–
C	DATA+	M	–
D	DATA-	N	–
E	–	P	–
F	–	R	–
G	0V	S	BATT-
H	+5VDC	T	BATT+
J	FG (Frame ground)	–	–

With an Incremental Encoder

A	–	K	–
B	–	L	–
C	DATA+	M	–
D	DATA-	N	–
E	–	P	–
F	–	R	–
G	0V	S	–
H	+5VDC	T	–
J	FG (Frame ground)	–	–

• Cable Specifications for Servomotor Connectors

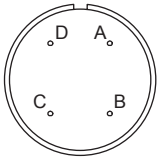

A	Phase U
B	Phase V
C	Phase W
D	FG (Frame ground)

• Cable Specifications for Brake Connectors

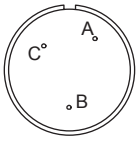

A	Brake terminal
B	Brake terminal
C	–

3.15.3 SGMGH Servomotors (1000 min^{-1}) With Standard Backlash Gears and Without Brakes (Foot-mounted Type)

(1) Grease Lubricating Type

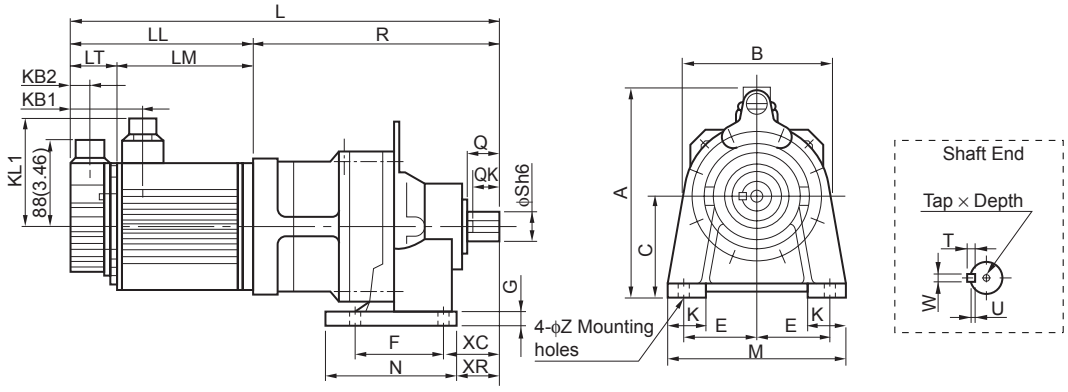

Units: mm (in)

Model SGMGH-	Gear Model	Gear Ratio	L	LL	LM	LT	KB1	KB2	KL1	R	A	B	C*	Shaft Center Allowable Radial Load N (lbf)
03A□BSA6	CNHX-4095	1/6	380 (15.0)	138 (5.43)	92 (3.62)	46 (1.81)	73 (2.87)	21 (0.83)	109 (4.29)	242 (9.53)	209 (8.23)	152 (5.98)	100 (3.94)	2360 (531)
03A□BSB6	CNHX-4095	1/11	380 (15.0)	138 (5.43)	92 (3.62)	46 (1.81)	73 (2.87)	21 (0.83)	109 (4.29)	242 (9.53)	209 (8.23)	152 (5.98)	100 (3.94)	2890 (650)
03A□BSC6	CNHX-4105	1/21	394 (15.5)	138 (5.43)	92 (3.62)	46 (1.81)	73 (2.87)	21 (0.83)	109 (4.29)	256 (10.1)	209 (8.23)	152 (5.98)	100 (3.94)	5390 (1213)
03A□BS76	CNHX-4105	1/29	394 (15.5)	138 (5.43)	92 (3.62)	46 (1.81)	73 (2.87)	21 (0.83)	109 (4.29)	256 (10.1)	209 (8.23)	152 (5.98)	100 (3.94)	5390 (1213)
06A□BSA6	CNHX-4105	1/6	417 (16.4)	161 (6.34)	115 (4.53)	46 (1.81)	73 (2.87)	21 (0.83)	109 (4.29)	256 (10.1)	209 (8.23)	152 (5.98)	100 (3.94)	3720 (837)
06A□BSB6	CNHX-4105	1/11	417 (16.4)	161 (6.34)	115 (4.53)	46 (1.81)	73 (2.87)	21 (0.83)	109 (4.29)	256 (10.1)	209 (8.23)	152 (5.98)	100 (3.94)	4550 (1024)
06A□BSC6	CNHX-4115	1/21	449 (17.7)	161 (6.34)	115 (4.53)	46 (1.81)	73 (2.87)	21 (0.83)	109 (4.29)	288 (11.3)	257 (10.1)	204 (8.03)	120 (4.72)	7070 (1591)
06A□BS76	CNHX-4115	1/29	449 (17.7)	161 (6.34)	115 (4.53)	46 (1.81)	73 (2.87)	21 (0.83)	109 (4.29)	288 (11.3)	257 (10.1)	204 (8.03)	120 (4.72)	7860 (1769)
09A□BSA6	CNHX-4105	1/6	441 (17.4)	185 (7.28)	139 (5.47)	46 (1.81)	73 (2.87)	21 (0.83)	109 (4.29)	256 (10.1)	209 (8.23)	152 (5.98)	100 (3.94)	3720 (837)
09A□BSB6	CNHX-4105	1/11	441 (17.4)	185 (7.28)	139 (5.47)	46 (1.81)	73 (2.87)	21 (0.83)	109 (4.29)	256 (10.1)	209 (8.23)	152 (5.98)	100 (3.94)	4550 (1024)
09A□BSC6	CNHX-4115	1/21	473 (18.6)	185 (7.28)	139 (5.47)	46 (1.81)	73 (2.87)	21 (0.83)	109 (4.29)	288 (11.3)	257 (10.1)	204 (8.03)	120 (4.72)	7070 (1591)
09A□BS76	CNHX-4115	1/29	473 (18.6)	185 (7.28)	139 (5.47)	46 (1.81)	73 (2.87)	21 (0.83)	109 (4.29)	288 (11.3)	257 (10.1)	204 (8.03)	120 (4.72)	7860 (1769)
12A□BSA6	CNHX-4115	1/6	477 (18.8)	166 (6.54)	119 (4.69)	47 (1.85)	77 (3.03)	22 (0.87)	140 (5.51)	311 (12.2)	260 (10.2)	204 (8.03)	120 (4.72)	4660 (1049)
12A□BSB6	CNHX-4115	1/11	477 (18.8)	166 (6.54)	119 (4.69)	47 (1.85)	77 (3.03)	22 (0.87)	140 (5.51)	311 (12.2)	260 (10.2)	204 (8.03)	120 (4.72)	5700 (1283)
20A□BSA6	CNHX-4115	1/6	503 (19.8)	192 (7.56)	145 (5.71)	47 (1.85)	77 (3.03)	22 (0.87)	140 (5.51)	311 (12.2)	260 (10.2)	204 (8.03)	120 (4.72)	4660 (1049)

3.15.3 SGMGH Servomotors (1000 min^{-1}) With Standard Backlash Gears and Without Brakes (Foot-mounted Type)

Units: mm (in)

Model SGMGH-	Gear Model	Gear Ratio	L	LL	LM	LT	KB1	KB2	KL1	R	A	B	C*	Shaft Center Allowable Radial Load N (lbf)
20A□BSB6	CNHX-4115	1/11	503 (19.8)	192 (7.56)	145 (5.71)	47 (1.85)	77 (3.03)	22 (0.87)	140 (5.51)	311 (12.2)	260 (10.2)	204 (8.03)	120 (4.72)	5700 (1283)

* The tolerances for all models are $^{0}_{-0.5}$.

Model SGMGH-	Gear Ratio	Foot-mounted Dimensions mm (in)									Shaft-end Dimensions mm (in)							Approx. Mass kg (lb)
		E	F	G	K	M	N	XR	XC	Z	Q	QK	S	T	U	W	Tap × Depth	
03A□BSA6	1/6	75 (2.95)	90 (3.54)	12 (0.47)	40 (1.57)	180 (7.09)	130 (5.12)	45 (1.77)	60 (2.36)	11 (0.43)	35 (1.38)	32 (1.26)	28 (1.10)	7 (0.28)	4 (0.16)	8 (0.31)	M8×19	20.5 (45.2)
03A□BSB6	1/11	75 (2.95)	90 (3.54)	12 (0.47)	40 (1.57)	180 (7.09)	130 (5.12)	45 (1.77)	60 (2.36)	11 (0.43)	35 (1.38)	32 (1.26)	28 (1.10)	7 (0.28)	4 (0.16)	8 (0.31)	M8×19	20.5 (45.2)
03A□BSC6	1/21	75 (2.95)	90 (3.54)	12 (0.47)	40 (1.57)	180 (7.09)	135 (5.31)	45 (1.77)	60 (2.36)	11 (0.43)	35 (1.38)	32 (1.26)	28 (1.10)	7 (0.28)	4 (0.16)	8 (0.31)	M8×19	22.5 (49.6)
03A□BS76	1/29	75 (2.95)	90 (3.54)	12 (0.47)	40 (1.57)	180 (7.09)	135 (5.31)	45 (1.77)	60 (2.36)	11 (0.43)	35 (1.38)	32 (1.26)	28 (1.10)	7 (0.28)	4 (0.16)	8 (0.31)	M8×19	22.5 (49.6)
06A□BSA6	1/6	75 (2.95)	90 (3.54)	12 (0.47)	40 (1.57)	180 (7.09)	135 (5.31)	45 (1.77)	60 (2.36)	11 (0.43)	35 (1.38)	32 (1.26)	28 (1.10)	7 (0.28)	4 (0.16)	8 (0.31)	M8×19	24.6 (54.2)
06A□BSB6	1/11	75 (2.95)	90 (3.54)	12 (0.47)	40 (1.57)	180 (7.09)	135 (5.31)	45 (1.77)	60 (2.36)	11 (0.43)	35 (1.38)	32 (1.26)	28 (1.10)	7 (0.28)	4 (0.16)	8 (0.31)	M8×19	24.6 (54.2)
06A□BSC6	1/21	95 (3.74)	115 (4.53)	15 (0.59)	55 (2.17)	230 (9.06)	155 (6.10)	62 (2.44)	82 (3.23)	14 (0.55)	55 (2.17)	50 (1.97)	38 (1.50)	8 (0.31)	5 (0.20)	10 (0.39)	M10×22	34.6 (76.3)
06A□BS76	1/29	95 (3.74)	115 (4.53)	15 (0.59)	55 (2.17)	230 (9.06)	155 (6.10)	62 (2.44)	82 (3.23)	14 (0.55)	55 (2.17)	50 (1.97)	38 (1.50)	8 (0.31)	5 (0.20)	10 (0.39)	M10×22	34.6 (76.3)
09A□BSA6	1/6	75 (2.95)	90 (3.54)	12 (0.47)	40 (1.57)	180 (7.09)	135 (5.31)	45 (1.77)	60 (2.36)	11 (0.43)	35 (1.38)	32 (1.26)	28 (1.10)	7 (0.28)	4 (0.16)	8 (0.31)	M8×19	26.6 (58.6)
09A□BSB6	1/11	75 (2.95)	90 (3.54)	12 (0.47)	40 (1.57)	180 (7.09)	135 (5.31)	45 (1.77)	60 (2.36)	11 (0.43)	35 (1.38)	32 (1.26)	28 (1.10)	7 (0.28)	4 (0.16)	8 (0.31)	M8×19	26.6 (58.6)
09A□BSC6	1/21	95 (3.74)	115 (4.53)	15 (0.59)	55 (2.17)	230 (9.06)	155 (6.10)	62 (2.44)	82 (3.23)	14 (0.55)	55 (2.17)	50 (1.97)	38 (1.50)	8 (0.31)	5 (0.20)	10 (0.39)	M10×22	36.6 (80.7)
09A□BS76	1/29	95 (3.74)	115 (4.53)	15 (0.59)	55 (2.17)	230 (9.06)	155 (6.10)	62 (2.44)	82 (3.23)	14 (0.55)	55 (2.17)	50 (1.97)	38 (1.50)	8 (0.31)	5 (0.20)	10 (0.39)	M10×22	36.6 (80.7)
12A□BSA6	1/6	95 (3.74)	115 (4.53)	15 (0.59)	55 (2.17)	230 (9.06)	155 (6.10)	62 (2.44)	82 (3.23)	14 (0.55)	55 (2.17)	50 (1.97)	38 (1.50)	8 (0.31)	5 (0.20)	10 (0.39)	M10×22	43 (94.8)
12A□BSB6	1/11	95 (3.74)	115 (4.53)	15 (0.59)	55 (2.17)	230 (9.06)	155 (6.10)	62 (2.44)	82 (3.23)	14 (0.55)	55 (2.17)	50 (1.97)	38 (1.50)	8 (0.31)	5 (0.20)	10 (0.39)	M10×22	43 (94.8)
20A□BSA6	1/6	95 (3.74)	115 (4.53)	15 (0.59)	55 (2.17)	230 (9.06)	155 (6.10)	62 (2.44)	82 (3.23)	14 (0.55)	55 (2.17)	50 (1.97)	38 (1.50)	8 (0.31)	5 (0.20)	10 (0.39)	M10×22	47 (104)
20A□BSB6	1/11	95 (3.74)	115 (4.53)	15 (0.59)	55 (2.17)	230 (9.06)	155 (6.10)	62 (2.44)	82 (3.23)	14 (0.55)	55 (2.17)	50 (1.97)	38 (1.50)	8 (0.31)	5 (0.20)	10 (0.39)	M10×22	47 (104)

- Dimensional Tolerances

Units: mm (in)

Model SGMGH-	Shaft-end Dimensions
	S
03A□BSA6	$28^{0}_{-0.013}\left(1.10^{0}_{-0.0005}\right)$
03A□BSB6	$28^{0}_{-0.013}\left(1.10^{0}_{-0.0005}\right)$
03A□BSC6	$28^{0}_{-0.013}\left(1.10^{0}_{-0.0005}\right)$
03A□BS76	$28^{0}_{-0.013}\left(1.10^{0}_{-0.0005}\right)$
06A□BSA6	$28^{0}_{-0.013}\left(1.10^{0}_{-0.0005}\right)$
06A□BSB6	$28^{0}_{-0.013}\left(1.10^{0}_{-0.0005}\right)$
06A□BSC6	$38^{0}_{-0.016}\left(1.50^{0}_{-0.0006}\right)$
06A□BS76	$38^{0}_{-0.016}\left(1.50^{0}_{-0.0006}\right)$
09A□BSA6	$28^{0}_{-0.013}\left(1.10^{0}_{-0.0005}\right)$
09A□BSB6	$28^{0}_{-0.013}\left(1.10^{0}_{-0.0005}\right)$
09A□BSC6	$38^{0}_{-0.016}\left(1.50^{0}_{-0.0006}\right)$
09A□BS76	$38^{0}_{-0.016}\left(1.50^{0}_{-0.0006}\right)$
12A□BSA6	$38^{0}_{-0.016}\left(1.50^{0}_{-0.0006}\right)$
12A□BSB6	$38^{0}_{-0.016}\left(1.50^{0}_{-0.0006}\right)$
20A□BSA6	$38^{0}_{-0.016}\left(1.50^{0}_{-0.0006}\right)$
20A□BSB6	$38^{0}_{-0.016}\left(1.50^{0}_{-0.0006}\right)$

INFO

■ Lubrication

- Since grease has been filled prior to shipment, the servomotors can be used without replenishing grease.

(2) Oil Lubricating Type

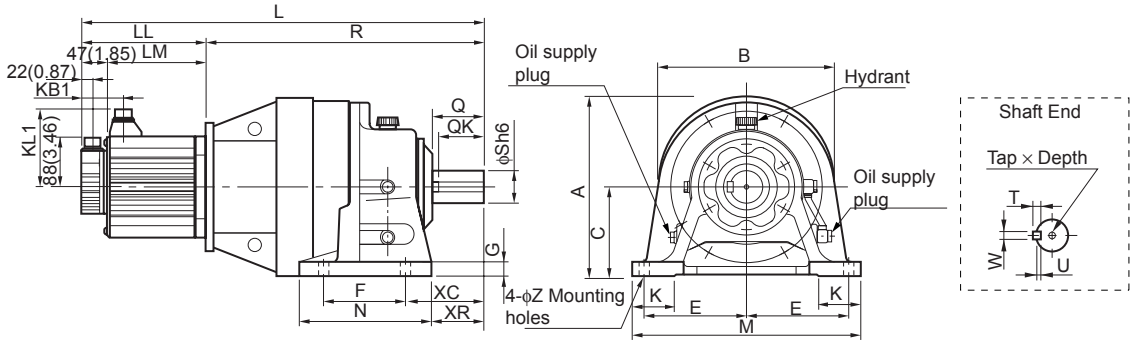

3.15.3 SGMGH Servomotors (1000 min^{-1}) With Standard Backlash Gears and Without Brakes (Foot-mounted Type)

Units: mm (in)

Model SGMGH-	Gear Model	Gear Ratio	L	LL	LM	KB1	KL1	R	A	B	C	Shaft Center Allowable Radial Load N (lbf)
12A□BSC6	CHHX-4130	1/21	536 (21.1)	166 (6.54)	119 (4.69)	77 (3.03)	140 (5.51)	370 (14.6)	300 (11.8)	246 (9.69)	150 (5.91)	10180 (2291)
12A□BS76	CHHX-4135	1/29	536 (21.1)	166 (6.54)	119 (4.69)	77 (3.03)	140 (5.51)	370 (14.6)	300 (11.8)	246 (9.69)	150 (5.91)	11320 (2547)
20A□BSC6	CHHX-4145	1/21	582 (22.9)	192 (7.56)	145 (5.71)	77 (3.03)	140 (5.51)	390 (15.4)	300 (11.8)	246 (9.69)	150 (5.91)	13040 (2934)
20A□BS76	CHHJ-4160	1/29	687 (27.0)	192 (7.56)	145 (5.71)	77 (3.03)	140 (5.51)	495 (19.5)	319 (12.6)	318 (12.5)	160 (6.30)	18520 (4167)
30A□BSA6	CHHX-4130	1/6	596 (23.5)	226 (8.90)	179 (7.05)	77 (3.03)	140 (5.51)	370 (14.6)	300 (11.8)	246 (9.69)	150 (5.91)	6740 (1517)
30A□BSB6	CHHX-4135	1/11	596 (23.5)	226 (8.90)	179 (7.05)	77 (3.03)	140 (5.51)	370 (14.6)	300 (11.8)	246 (9.69)	150 (5.91)	8240 (1854)
30A□BSC6	CHHJ-4160	1/21	721 (28.4)	226 (8.90)	179 (7.05)	77 (3.03)	140 (5.51)	495 (19.5)	319 (12.6)	318 (12.5)	160 (6.30)	16740 (3767)
30A□BS76	CHHJ-4170	1/29	785 (30.9)	226 (8.90)	179 (7.05)	77 (3.03)	140 (5.51)	559 (22.0)	382 (15.0)	363 (14.3)	200 (7.87)	21770 (4898)
40A□BSA6	CHHX-4135	1/6	664 (26.1)	260 (10.2)	213 (8.39)	86 (3.39)	150 (5.91)	404 (15.9)	300 (11.8)	246 (9.69)	150 (5.91)	6740 (1517)
40A□BSB6	CHHX-4145	1/11	684 (26.9)	260 (10.2)	213 (8.39)	86 (3.39)	150 (5.91)	424 (16.7)	300 (11.8)	246 (9.69)	150 (5.91)	10740 (2417)
40A□BSC6	CHHJ-4170	1/21	853 (33.6)	260 (10.2)	213 (8.39)	86 (3.39)	150 (5.91)	593 (23.3)	382 (15.0)	363 (14.3)	200 (7.87)	19560 (4401)
40A□BS76	CHHJ-4175	1/29	853 (33.6)	260 (10.2)	213 (8.39)	86 (3.39)	150 (5.91)	593 (23.3)	382 (15.0)	363 (14.3)	200 (7.87)	21790 (4903)
55A□BSB6	CHHJ-4160	1/11	863 (34.0)	334 (13.1)	287 (11.3)	86 (3.39)	150 (5.91)	529 (20.8)	319 (12.6)	318 (12.5)	160 (6.30)	13470 (3031)
55A□BSC6	CHHJ-4175	1/21	927 (36.5)	334 (13.1)	287 (11.3)	86 (3.39)	150 (5.91)	593 (23.3)	382 (15.0)	363 (14.3)	200 (7.87)	19560 (4401)
55A□BS76	CHHJ-4185	1/29	977 (38.5)	334 (13.1)	287 (11.3)	86 (3.39)	150 (5.91)	643 (25.3)	417 (16.4)	393 (15.5)	220 (8.66)	29200 (6570)

Model SGMGH-	Gear Ratio	Dimensions with Feet mm (in)									Shaft-end Dimensions mm (in)							Approx. Mass kg (lb)
		E	F	G	K	M	N	XR	XC	Z	Q	QK	S	T	U	W	Tap × Depth	
12A□BSC6	1/21	145 (5.71)	145 (5.71)	22 (0.87)	65 (2.56)	330 (13.0)	195 (7.68)	75 (2.95)	100 (3.94)	18 (0.71)	70 (2.76)	56 (2.20)	50 (1.97)	9 (0.35)	5.5 (0.22)	14 (0.55)	M10 × 18	67 (148)
12A□BS76	1/29	145 (5.71)	145 (5.71)	22 (0.87)	65 (2.56)	330 (13.0)	195 (7.68)	75 (2.95)	100 (3.94)	18 (0.71)	70 (2.76)	56 (2.20)	50 (1.97)	9 (0.35)	5.5 (0.22)	14 (0.55)	M10 × 18	67 (148)
20A□BSC6	1/21	145 (5.71)	145 (5.71)	22 (0.87)	65 (2.56)	330 (13.0)	195 (7.68)	95 (3.74)	120 (4.72)	18 (0.71)	90 (3.54)	80 (3.15)	50 (1.97)	9 (0.35)	5.5 (0.22)	14 (0.55)	M10 × 18	72 (159)
20A□BS76	1/29	185 (7.28)	150 (5.91)	25 (0.98)	75 (2.95)	410 (16.1)	238 (9.37)	95 (3.74)	139 (5.47)	18 (0.71)	90 (3.54)	80 (3.15)	60 (2.36)	11 (0.43)	7 (0.28)	18 (0.71)	M10 × 18	126 (278)
30A□BSA6	1/6	145 (5.71)	145 (5.71)	22 (0.87)	65 (2.56)	330 (13.0)	195 (7.68)	75 (2.95)	100 (3.94)	18 (0.71)	70 (2.76)	56 (2.20)	50 (1.97)	9 (0.35)	5.5 (0.22)	14 (0.55)	M10 × 18	76 (168)
30A□BSB6	1/11	145 (5.71)	145 (5.71)	22 (0.87)	65 (2.56)	330 (13.0)	195 (7.68)	75 (2.95)	100 (3.94)	18 (0.71)	70 (2.76)	56 (2.20)	50 (1.97)	9 (0.35)	5.5 (0.22)	14 (0.55)	M10 × 18	76 (168)

Model SGMGH-	Gear Ratio	Dimensions with Feet mm (in)									Shaft-end Dimensions mm (in)							Approx. Mass kg (lb)
		E	F	G	K	M	N	XR	XC	Z	Q	QK	S	T	U	W	Tap × Depth	
30A□BSC6	1/21	185 (7.28)	150 (5.91)	25 (0.98)	75 (2.95)	410 (16.1)	238 (9.37)	95 (3.74)	139 (5.47)	18 (0.71)	90 (3.54)	80 (3.15)	60 (2.36)	11 (0.43)	7 (0.28)	18 (0.71)	M10 × 18	131 (289)
30A□BS76	1/29	190 (7.48)	275 (10.8)	30 (1.18)	80 (3.15)	430 (16.9)	335 (13.2)	95 (3.74)	125 (4.92)	22 (0.87)	90 (3.54)	80 (3.15)	70 (2.76)	12 (0.47)	7.5 (0.30)	20 (0.79)	M12 × 24	176 (388)
40A□BSA6	1/6	145 (5.71)	145 (5.71)	22 (0.87)	65 (2.56)	330 (13.0)	195 (7.68)	75 (2.95)	100 (3.94)	18 (0.71)	70 (2.76)	56 (2.20)	50 (1.97)	9 (0.35)	5.5 (0.22)	14 (0.55)	M10 × 18	88 (194)
40A□BSB6	1/11	145 (5.71)	145 (5.71)	22 (0.87)	65 (2.56)	330 (13.0)	195 (7.68)	95 (3.74)	120 (4.72)	18 (0.71)	90 (3.54)	80 (3.15)	50 (1.97)	9 (0.35)	5.5 (0.22)	14 (0.55)	M10 × 18	89 (196)
40A□BSC6	1/21	190 (7.48)	275 (10.8)	30 (1.18)	80 (3.15)	430 (16.9)	335 (13.2)	95 (3.74)	125 (4.92)	22 (0.87)	90 (3.54)	80 (3.15)	70 (2.76)	12 (0.47)	7.5 (0.30)	20 (0.79)	M12 × 24	191 (421)
40A□BS76	1/29	190 (7.48)	275 (10.8)	30 (1.18)	80 (3.15)	430 (16.9)	335 (13.2)	95 (3.74)	125 (4.92)	22 (0.87)	90 (3.54)	80 (3.15)	70 (2.76)	12 (0.47)	7.5 (0.30)	20 (0.79)	M12 × 24	191 (421)
55A□BSB6	1/11	185 (7.28)	150 (5.91)	25 (0.98)	75 (2.95)	410 (16.1)	238 (9.37)	95 (3.74)	139 (5.47)	18 (0.71)	90 (3.54)	80 (3.15)	60 (2.36)	11 (0.43)	7 (0.28)	18 (0.71)	M10 × 18	155 (342)
55A□BSC6	1/21	190 (7.48)	275 (10.8)	30 (1.18)	80 (3.15)	430 (16.9)	335 (13.2)	95 (3.74)	125 (4.92)	22 (0.87)	90 (3.54)	80 (3.15)	70 (2.76)	12 (0.47)	7.5 (0.30)	20 (0.79)	M12 × 24	201 (443)
55A□BS76	1/29	210 (8.27)	320 (12.6)	30 (1.18)	85 (3.35)	470 (18.5)	380 (15.0)	115 (4.53)	145 (5.71)	22 (0.87)	110 (4.33)	100 (3.94)	80 (3.15)	14 (0.55)	9 (0.35)	22 (0.87)	M12 × 24	245 (540)

3

- Dimensional Tolerances

Units: mm (in)

Model SGMGH-	Shaft-end Dimensions
	S
12A□BSC6	$50^{0}_{-0.016}\left(1.97^{0}_{-0.0006}\right)$
12A□BS76	$50^{0}_{-0.016}\left(1.97^{0}_{-0.0006}\right)$
20A□BSC6	$50^{0}_{-0.016}\left(1.97^{0}_{-0.0006}\right)$
20A□BS76	$60^{0}_{-0.019}\left(2.36^{0}_{-0.0007}\right)$
30A□BSA6	$50^{0}_{-0.016}\left(1.97^{0}_{-0.0006}\right)$
30A□BSB6	$50^{0}_{-0.016}\left(1.97^{0}_{-0.0006}\right)$
30A□BSC6	$60^{0}_{-0.019}\left(2.36^{0}_{-0.0007}\right)$
30A□BS76	$70^{0}_{-0.019}\left(2.76^{0}_{-0.0007}\right)$
40A□BSA6	$50^{0}_{-0.016}\left(1.97^{0}_{-0.0006}\right)$
40A□BSB6	$50^{0}_{-0.016}\left(1.97^{0}_{-0.0006}\right)$
40A□BSC6	$70^{0}_{-0.019}\left(2.76^{0}_{-0.0007}\right)$
40A□BS76	$70^{0}_{-0.019}\left(2.76^{0}_{-0.0007}\right)$
55A□BSB6	$60^{0}_{-0.019}\left(2.36^{0}_{-0.0007}\right)$
55A□BSC6	$70^{0}_{-0.019}\left(2.76^{0}_{-0.0007}\right)$

Units: mm (in)

Model SGMGH-	Shaft-end Dimensions
	S
55A□BS76	$80^{0}_{-0.019}\left(3.15^{0}_{-0.0007}\right)$

INFO

■ Lubrication

- Oil lubricating type (frame numbers: 4130 to 4190)

  Servomotors of this type have been shipped with oil removed. Be sure to supply oil until the red line at the upper side of the oil gauge.

  Lubrication oil recommended is industrial-use extreme-pressure gear oil of SP-system, JIS K 2219 industrial-use gear oil or equivalent. Refer to the following table.

Ambient Temperature	Manufacturer		
	COSMO Oil Co., Ltd.	Nippon Oil Co., Ltd.	Tonen General Sekiyu K. K.
0 to 35 °C (32 to 95 °F)	COSMO Gear SE 100, 150	BON-NOCK M 100, 150	GENERAL SP Gear Roll 100, 150

The following shows approximate oil amount to be supplied.

Units: liter

Frame No.	4130 4135	4145	4155	4160 4165	4170 4175	4180 4185	4190
Horizontal type	0.7	0.7	0.7	1.4	1.9	2.5	4.0

3.15.4 SGMGH Servomotors (1000 min^{-1}) With Standard Backlash Gears and Without Brakes (Flange-mounted Type)

(1) Grease Lubricating Type

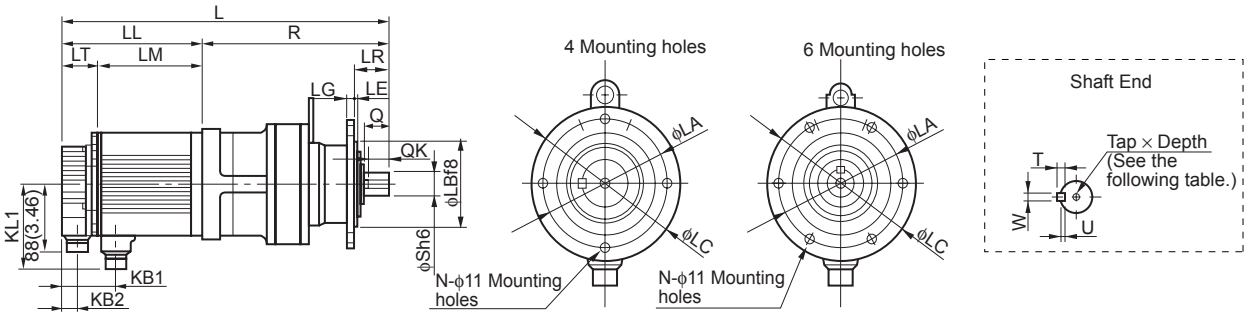

Units: mm (in)

Model SGMGH-	Gear Model	Gear Ratio	L	LL	LM	LT	KB1	KB2	KL1	R	Shaft Center Allowable Radial Load N (lbf)
03A□BTA6	CNVX-4095	1/6	380 (15.0)	138 (5.43)	92 (3.62)	46 (1.81)	73 (2.87)	21 (0.83)	109 (4.29)	242 (9.53)	2360 (531)
03A□BTB6	CNVX-4095	1/11	380 (15.0)	138 (5.43)	92 (3.62)	46 (1.81)	73 (2.87)	21 (0.83)	109 (4.29)	242 (9.53)	2890 (650)

Units: mm (in)

Model SGMGH-	Gear Model	Gear Ratio	L	LL	LM	LT	KB1	KB2	KL1	R	Shaft Center Allowable Radial Load N (lbf)
03A□BTC6	CNVX-4105	1/21	394 (15.5)	138 (5.43)	92 (3.62)	46 (1.81)	73 (2.87)	21 (0.83)	109 (4.29)	256 (10.1)	5390 (1213)
03A□BT76	CNVX-4105	1/29	394 (15.5)	138 (5.43)	92 (3.62)	46 (1.81)	73 (2.87)	21 (0.83)	109 (4.29)	256 (10.1)	5390 (1213)
06A□BTA6	CNVX-4105	1/6	417 (16.4)	161 (6.34)	115 (4.53)	46 (1.81)	73 (2.87)	21 (0.83)	109 (4.29)	256 (10.1)	3720 (837)
06A□BTB6	CNVX-4105	1/11	417 (16.4)	161 (6.34)	115 (4.53)	46 (1.81)	73 (2.87)	21 (0.83)	109 (4.29)	256 (10.1)	4550 (1024)
06A□BTC6	CNVX-4115	1/21	449 (17.7)	161 (6.34)	115 (4.53)	46 (1.81)	73 (2.87)	21 (0.83)	109 (4.29)	288 (11.3)	7070 (1591)
06A□BT76	CNVX-4115	1/29	449 (17.7)	161 (6.34)	115 (4.53)	46 (1.81)	73 (2.87)	21 (0.83)	109 (4.29)	288 (11.3)	7860 (1769)
09A□BTA6	CNVX-4105	1/6	441 (17.4)	185 (7.28)	139 (5.47)	46 (1.81)	73 (2.87)	21 (0.83)	109 (4.29)	256 (10.1)	3720 (837)
09A□BTB6	CNVX-4105	1/11	441 (17.4)	185 (7.28)	139 (5.47)	46 (1.81)	73 (2.87)	21 (0.83)	109 (4.29)	256 (10.1)	4550 (1024)
09A□BTC6	CNVX-4115	1/21	473 (18.6)	185 (7.28)	139 (5.47)	46 (1.81)	73 (2.87)	21 (0.83)	109 (4.29)	288 (11.3)	7070 (1591)
09A□BT76	CNVX-4115	1/29	473 (18.6)	185 (7.28)	139 (5.47)	46 (1.81)	73 (2.87)	21 (0.83)	109 (4.29)	288 (11.3)	7860 (1769)
12A□BTA6	CNVX-4115	1/6	477 (18.8)	166 (6.54)	119 (4.69)	47 (1.85)	77 (3.03)	22 (0.87)	140 (5.51)	311 (12.2)	4660 (1049)
12A□BTB6	CNVX-4115	1/11	477 (18.8)	166 (6.54)	119 (4.69)	47 (1.85)	77 (3.03)	22 (0.87)	140 (5.51)	311 (12.2)	5700 (1283)
20A□BTA6	CNVX-4115	1/6	503 (19.8)	192 (7.56)	145 (5.71)	47 (1.85)	77 (3.03)	22 (0.87)	140 (5.51)	311 (12.2)	4660 (1049)
20A□BTB6	CNVX-4115	1/11	503 (19.8)	192 (7.56)	145 (5.71)	47 (1.85)	77 (3.03)	22 (0.87)	140 (5.51)	311 (12.2)	5700 (1283)

Model SGMGH-	Flange Face Dimensions mm (in)							Shaft-end Dimensions mm (in)							Approx. Mass kg (lb)
	LA	LB	LC	LE	LG	LR	N	Q	QK	S	T	U	W	Tap × Depth	
03A□BTA6	134 (5.28)	110 (4.33)	160 (6.30)	3 (0.12)	9 (0.35)	48 (1.89)	4 (0.16)	35 (1.38)	32 (1.26)	28 (1.10)	7 (0.28)	4 (0.16)	8 (0.31)	M8 × 19	18.5 (40.8)
03A□BTB6	134 (5.28)	110 (4.33)	160 (6.30)	3 (0.12)	9 (0.35)	48 (1.89)	4 (0.16)	35 (1.38)	32 (1.26)	28 (1.10)	7 (0.28)	4 (0.16)	8 (0.31)	M8 × 19	18.5 (40.8)
03A□BTC6	134 (5.28)	110 (4.33)	160 (6.30)	3 (0.12)	9 (0.35)	48 (1.89)	4 (0.16)	35 (1.38)	32 (1.26)	28 (1.10)	7 (0.28)	4 (0.16)	8 (0.31)	M8 × 19	20.5 (45.2)
03A□BT76	134 (5.28)	110 (4.33)	160 (6.30)	3 (0.12)	9 (0.35)	48 (1.89)	4 (0.16)	35 (1.38)	32 (1.26)	28 (1.10)	7 (0.28)	4 (0.16)	8 (0.31)	M8 × 19	20.5 (45.2)
06A□BTA6	134 (5.28)	110 (4.33)	160 (6.30)	3 (0.12)	9 (0.35)	48 (1.89)	4 (0.16)	35 (1.38)	32 (1.26)	28 (1.10)	7 (0.28)	4 (0.16)	8 (0.31)	M8 × 19	22.6 (49.8)
06A□BTB6	134 (5.28)	110 (4.33)	160 (6.30)	3 (0.12)	9 (0.35)	48 (1.89)	4 (0.16)	35 (1.38)	32 (1.26)	28 (1.10)	7 (0.28)	4 (0.16)	8 (0.31)	M8 × 19	22.6 (49.8)
06A□BTC6	180 (7.09)	140 (5.51)	210 (8.27)	4 (0.16)	13 (0.51)	69 (2.72)	6 (0.24)	55 (2.17)	50 (1.97)	38 (1.50)	8 (0.31)	5 (0.20)	10 (0.39)	M10 × 22	33.6 (74.1)

3.15.4 SGMGH Servomotors (1000 min^{-1}) With Standard Backlash Gears and Without Brakes (Flange-mounted Type)

Model SGMGH-	Flange Face Dimensions mm (in)							Shaft-end Dimensions mm (in)							Approx. Mass kg (lb)
	LA	LB	LC	LE	LG	LR	N	Q	QK	S	T	U	W	Tap × Depth	
06A□BT76	180 (7.09)	140 (5.51)	210 (8.27)	4 (0.16)	13 (0.51)	69 (2.72)	6 (0.24)	55 (2.17)	50 (1.97)	38 (1.50)	8 (0.31)	5 (0.20)	10 (0.39)	M10 × 22	33.6 (74.1)
09A□BTA6	134 (5.28)	110 (4.33)	160 (6.30)	3 (0.12)	9 (0.35)	48 (1.89)	4 (0.16)	35 (1.38)	32 (1.26)	28 (1.10)	7 (0.28)	4 (0.16)	8 (0.31)	M8 × 19	24.6 (54.2)
09A□BTB6	134 (5.28)	110 (4.33)	160 (6.30)	3 (0.12)	9 (0.35)	48 (1.89)	4 (0.16)	35 (1.38)	32 (1.26)	28 (1.10)	7 (0.28)	4 (0.16)	8 (0.31)	M8 × 19	24.6 (54.2)
09A□BTC6	180 (7.09)	140 (5.51)	210 (8.27)	4 (0.16)	13 (0.51)	69 (2.72)	6 (0.24)	55 (2.17)	50 (1.97)	38 (1.50)	8 (0.31)	5 (0.20)	10 (0.39)	M10 × 22	35.6 (78.5)
09A□BT76	180 (7.09)	140 (5.51)	210 (8.27)	4 (0.16)	13 (0.51)	69 (2.72)	6 (0.24)	55 (2.17)	50 (1.97)	38 (1.50)	8 (0.31)	5 (0.20)	10 (0.39)	M10 × 22	35.6 (78.5)
12A□BTA6	180 (7.09)	140 (5.51)	210 (8.27)	4 (0.16)	13 (0.51)	69 (2.72)	6 (0.24)	55 (2.17)	50 (1.97)	38 (1.50)	8 (0.31)	5 (0.20)	10 (0.39)	M10 × 22	42 (92.6)
12A□BTB6	180 (7.09)	140 (5.51)	210 (8.27)	4 (0.16)	13 (0.51)	69 (2.72)	6 (0.24)	55 (2.17)	50 (1.97)	38 (1.50)	8 (0.31)	5 (0.20)	10 (0.39)	M10 × 22	42 (92.6)
20A□BTA6	180 (7.09)	140 (5.51)	210 (8.27)	4 (0.16)	13 (0.51)	69 (2.72)	6 (0.24)	55 (2.17)	50 (1.97)	38 (1.50)	8 (0.31)	5 (0.20)	10 (0.39)	M10 × 22	46 (101)
20A□BTB6	180 (7.09)	140 (5.51)	210 (8.27)	4 (0.16)	13 (0.51)	69 (2.72)	6 (0.24)	55 (2.17)	50 (1.97)	38 (1.50)	8 (0.31)	5 (0.20)	10 (0.39)	M10 × 22	46 (101)

- Dimensional Tolerances

Units: mm (in)

Model SGMGH-	Flange Face Dimensions	Shaft-end Dimensions
	LB	S
03A□BTA6	$110^{-0.036}_{-0.090}\left(4.33^{-0.0014}_{-0.0035}\right)$	$28^{0}_{-0.013}\left(1.10^{0}_{-0.0005}\right)$
03A□BTB6	$110^{-0.036}_{-0.090}\left(4.33^{-0.0014}_{-0.0035}\right)$	$28^{0}_{-0.013}\left(1.10^{0}_{-0.0005}\right)$
03A□BTC6	$110^{-0.036}_{-0.090}\left(4.33^{-0.0014}_{-0.0035}\right)$	$28^{0}_{-0.013}\left(1.10^{0}_{-0.0005}\right)$
03A□BT76	$110^{-0.036}_{-0.090}\left(4.33^{-0.0014}_{-0.0035}\right)$	$28^{0}_{-0.013}\left(1.10^{0}_{-0.0005}\right)$
06A□BTA6	$110^{-0.036}_{-0.090}\left(4.33^{-0.0014}_{-0.0035}\right)$	$28^{0}_{-0.013}\left(1.10^{0}_{-0.0005}\right)$
06A□BTB6	$110^{-0.036}_{-0.090}\left(4.33^{-0.0014}_{-0.0035}\right)$	$28^{0}_{-0.013}\left(1.10^{0}_{-0.0005}\right)$
06A□BTC6	$140^{-0.043}_{-0.106}\left(5.51^{-0.0017}_{-0.0042}\right)$	$38^{0}_{-0.016}\left(1.50^{0}_{-0.0006}\right)$
06A□BT76	$140^{-0.043}_{-0.106}\left(5.51^{-0.0017}_{-0.0042}\right)$	$38^{0}_{-0.016}\left(1.50^{0}_{-0.0006}\right)$
09A□BTA6	$110^{-0.036}_{-0.090}\left(4.33^{-0.0014}_{-0.0035}\right)$	$28^{0}_{-0.013}\left(1.10^{0}_{-0.0005}\right)$
09A□BTB6	$110^{-0.036}_{-0.090}\left(4.33^{-0.0014}_{-0.0035}\right)$	$28^{0}_{-0.013}\left(1.10^{0}_{-0.0005}\right)$
09A□BTC6	$140^{-0.043}_{-0.106}\left(5.51^{-0.0017}_{-0.0042}\right)$	$38^{0}_{-0.016}\left(1.50^{0}_{-0.0006}\right)$
09A□BT76	$140^{-0.043}_{-0.106}\left(5.51^{-0.0017}_{-0.0042}\right)$	$38^{0}_{-0.016}\left(1.50^{0}_{-0.0006}\right)$
12A□BTA6	$140^{-0.043}_{-0.106}\left(5.51^{-0.0017}_{-0.0042}\right)$	$38^{0}_{-0.016}\left(1.50^{0}_{-0.0006}\right)$
12A□BTB6	$140^{-0.043}_{-0.106}\left(5.51^{-0.0017}_{-0.0042}\right)$	$38^{0}_{-0.016}\left(1.50^{0}_{-0.0006}\right)$

Units: mm (in)

Model SGMGH-	Flange Face Dimensions	Shaft-end Dimensions
	LB	S
20A□BTA6	$140^{-0.043}_{-0.106}\left(5.51^{-0.0017}_{-0.0042}\right)$	$38^{0}_{-0.016}\left(1.50^{0}_{-0.0006}\right)$
20A□BTB6	$140^{-0.043}_{-0.106}\left(5.51^{-0.0017}_{-0.0042}\right)$	$38^{0}_{-0.016}\left(1.50^{0}_{-0.0006}\right)$

INFO

■ Lubrication

- Grease lubricating type (frame numbers: 4095 to 4115)
  Since grease has been filled prior to shipment, the servomotors can be used without replenishing grease.

(2) Small Oil Lubricating Type

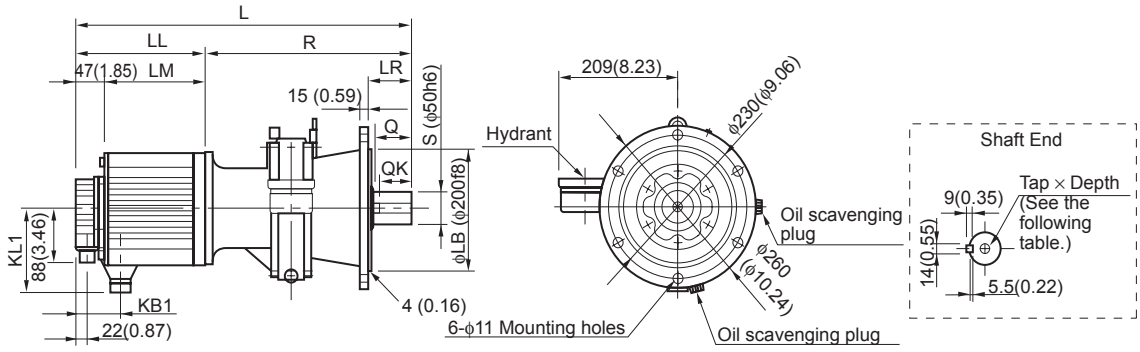

Units: mm (in)

Model SGMGH-	Gear Model	Gear Ratio	L	LL	LM	KB1	KL1	R	Shaft Center Allowable Radial Load N	Flange Face Dimensions	Shaft-end Dimensions			Approx. Mass kg (lb)
										LR	Q	QK	Tap × Depth	
12A□BTC6	CHVX-4130	1/21	536 (21.1)	166 (6.54)	119 (4.69)	77 (3.03)	140 (5.51)	370 (14.6)	10180 (2291)	76 (2.99)	70 (2.76)	56 (2.20)	M10×18	66 (146)
12A□BT76	CHVX-4135	1/29	536 (21.1)	166 (6.54)	119 (4.69)	77 (3.03)	140 (5.51)	370 (14.6)	11320 (2547)	76 (2.99)	70 (2.76)	56 (2.20)	M10×18	66 (146)
20A□BTC6	CNVX-4145	1/21	582 (22.9)	192 (7.56)	145 (5.71)	77 (3.03)	140 (5.51)	390 (15.4)	13040 (2934)	96 (3.78)	90 (3.54)	80 (3.15)	M10×18	71 (157)
30A□BTA6	CHVX-4130	1/6	596 (23.5)	226 (8.90)	179 (7.05)	77 (3.03)	140 (5.51)	370 (14.6)	6740 (1517)	76 (2.99)	70 (2.76)	56 (2.20)	M10×18	75 (165)
30A□BTB6	CHVX-4135	1/11	596 (23.5)	226 (8.90)	179 (7.05)	77 (3.03)	140 (5.51)	370 (14.6)	8240 (1854)	76 (2.99)	70 (2.76)	56 (2.20)	M10×18	75 (165)
40A□BTA6	CHVX-4135	1/6	664 (26.1)	260 (10.2)	213 (8.39)	86 (3.39)	150 (5.91)	404 (15.9)	6740 (1517)	76 (2.99)	70 (2.76)	56 (2.20)	M10×18	87 (192)
40A□BTB6	CHVX-4145	1/11	684 (26.9)	260 (10.2)	213 (8.39)	86 (3.39)	150 (5.91)	424 (16.7)	10740 (2417)	96 (3.78)	90 (3.54)	80 (3.15)	M10×18	88 (194)

- Dimensional Tolerances

Units: mm (in)

Model SGMGH-	Flange Face Dimensions	Shaft-end Dimensions
	LB	S
12A□BTC6	$200^{-0.050}_{-0.122}\left(7.87^{-0.0020}_{-0.0048}\right)$	$50^{0}_{-0.016}\left(1.97^{0}_{-0.0006}\right)$
12A□BT76	$200^{-0.050}_{-0.122}\left(7.87^{-0.0020}_{-0.0048}\right)$	$50^{0}_{-0.016}\left(1.97^{0}_{-0.0006}\right)$
20A□BTC6	$200^{-0.050}_{-0.122}\left(7.87^{-0.0020}_{-0.0048}\right)$	$50^{0}_{-0.016}\left(1.97^{0}_{-0.0006}\right)$
30A□BTA6	$200^{-0.050}_{-0.122}\left(7.87^{-0.0020}_{-0.0048}\right)$	$50^{0}_{-0.016}\left(1.97^{0}_{-0.0006}\right)$
30A□BTB6	$200^{-0.050}_{-0.122}\left(7.87^{-0.0020}_{-0.0048}\right)$	$50^{0}_{-0.016}\left(1.97^{0}_{-0.0006}\right)$
40A□BTA6	$200^{-0.050}_{-0.122}\left(7.87^{-0.0020}_{-0.0048}\right)$	$50^{0}_{-0.016}\left(1.97^{0}_{-0.0006}\right)$
40A□BTB6	$200^{-0.050}_{-0.122}\left(7.87^{-0.0020}_{-0.0048}\right)$	$50^{0}_{-0.016}\left(1.97^{0}_{-0.0006}\right)$

INFO

■ Lubrication

- Oil lubricating type (frame numbers: 4130 to 4190)

  Servomotors of this type have been shipped with oil removed. Be sure to supply oil until the red line at the upper side of the oil gauge.

  Lubrication oil recommended is industrial-use extreme-pressure gear oil of SP-system, JIS K 2219 industrial-use gear oil or equivalent. Refer to the following table.

Ambient Temperature	Manufacturer		
	COSMO Oil Co., Ltd.	Nippon Oil Co., Ltd.	Tonen General Sekiyu K. K.
0 to 35 °C (32 to 95 °F)	COSMO Gear SE 100, 150	BON-NOCK M 100, 150	GENERAL SP Gear Roll 100, 150

The following shows approximate oil amount to be supplied.

Units: liter

Frame No.	4130 4135	4145	4155	4160 4165	4170 4175	4180 4185	4190
Horizontal type	0.7	0.7	0.7	1.4	1.9	2.5	4.0

(3) Large Oil Lubricating Type

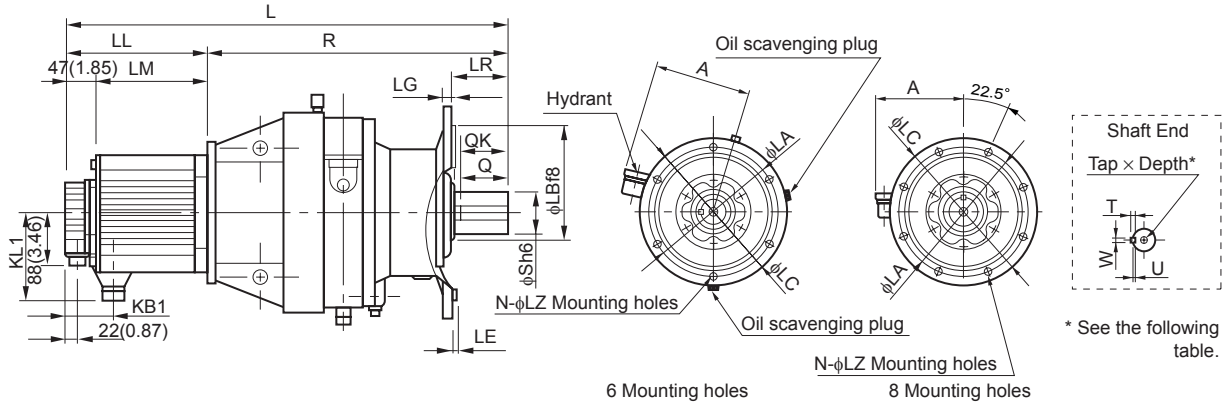

Units: mm (in)

Model SGMGH-	Gear Model	Gear Ratio	L	LL	LM	KB1	KL1	R	A	Shaft Center Allowable Radial Load N (lbf)
20A□BT76	CHVJ-4160	1/29	687 (27.0)	192 (7.56)	145 (5.71)	77 (3.03)	140 (5.51)	495 (19.5)	228 (8.98)	18520 (4167)
30A□BTC6	CHVJ-4160	1/21	721 (28.4)	226 (8.90)	179 (7.05)	77 (3.03)	140 (5.51)	495 (19.5)	228 (8.98)	16740 (3767)
30A□BT76	CHVJ-4170	1/29	785 (30.9)	226 (8.90)	179 (7.05)	77 (3.03)	140 (5.51)	559 (22.0)	243 (9.57)	21770 (4898)
40A□BTC6	CHVJ-4170	1/21	853 (33.6)	260 (10.2)	213 (8.39)	86 (3.39)	150 (5.91)	593 (23.3)	243 (9.57)	19560 (4401)
40A□BT76	CHVJ-4175	1/29	853 (33.6)	260 (10.2)	213 (8.39)	86 (3.39)	150 (5.91)	593 (23.3)	243 (9.57)	21790 (4891)
55A□BTB6	CHVJ-4160	1/11	863 (34.0)	334 (13.1)	287 (11.3)	86 (3.39)	150 (5.91)	529 (20.8)	228 (8.98)	13470 (3031)
55A□BTC6	CHVJ-4175	1/21	927 (36.5)	334 (13.1)	287 (11.3)	86 (3.39)	150 (5.91)	593 (23.3)	243 (9.57)	19560 (4401)
55A□BT76	CHVJ-4185	1/29	977 (38.5)	334 (13.1)	287 (11.3)	86 (3.39)	150 (5.91)	643 (25.3)	258 (10.2)	29200 (6570)

Model SGMGH-	Gear Ratio	Flange Face Dimensions mm (in)								Shaft-end Dimensions mm (in)							Approx. Mass kg (lb)
		LA	LB	LC	LE	LG	LR	N	LZ	Q	QK	S	T	U	W	Tap × Depth	
20A□BT76	1/29	310 (12.2)	270 (10.6)	340 (13.4)	4 (0.16)	20 (0.79)	89 (3.50)	6 (0.24)	11 (0.43)	90 (3.54)	80 (3.15)	60 (2.36)	11 (0.43)	7 (0.28)	18 (0.71)	M10×18	121 (267)
30A□BTC6	1/21	310 (12.2)	270 (10.6)	340 (13.4)	4 (0.16)	20 (0.79)	89 (3.50)	6 (0.24)	11 (0.43)	90 (3.54)	80 (3.15)	60 (2.36)	11 (0.43)	7 (0.28)	18 (0.71)	M10×18	126 (278)
30A□BT76	1/29	360 (14.2)	316 (12.4)	400 (15.7)	5 (0.20)	22 (0.87)	94 (3.70)	8 (0.31)	14 (0.55)	90 (3.54)	80 (3.15)	70 (2.76)	12 (0.47)	7.5 (0.30)	20 (0.79)	M12×24	176 (388)
40A□BTC6	1/21	360 (14.2)	316 (12.4)	400 (15.7)	5 (0.20)	22 (0.87)	94 (3.70)	8 (0.31)	14 (0.55)	90 (3.54)	80 (3.15)	70 (2.76)	12 (0.47)	7.5 (0.30)	20 (0.79)	M12×24	191 (421)
40A□BT76	1/29	360 (14.2)	316 (12.4)	400 (15.7)	5 (0.20)	22 (0.87)	94 (3.70)	8 (0.31)	14 (0.55)	90 (3.54)	80 (3.15)	70 (2.76)	12 (0.47)	7.5 (0.30)	20 (0.79)	M12×24	191 (421)
55A□BTB6	1/11	310 (12.2)	270 (10.6)	340 (13.4)	4 (0.16)	20 (0.79)	89 (3.50)	6 (0.24)	11 (0.43)	90 (3.54)	80 (3.15)	60 (2.36)	11 (0.43)	7 (0.28)	18 (0.71)	M10×18	150 (331)
55A□BTC6	1/21	360 (14.2)	316 (12.4)	400 (15.7)	5 (0.20)	22 (0.87)	94 (3.70)	8 (0.31)	14 (0.55)	90 (3.54)	80 (3.15)	70 (2.76)	12 (0.47)	7.5 (0.30)	20 (0.79)	M12×24	201 (443)
55A□BT76	1/29	390 (15.4)	345 (13.6)	430 (16.9)	5 (0.20)	22 (0.87)	110 (4.33)	8 (0.31)	18 (0.71)	110 (4.33)	100 (3.94)	80 (3.15)	14 (0.55)	9 (0.35)	22 (0.87)	M12×24	232 (511)

• Dimensional Tolerances

Units: mm (in)

Model SGMGH-	Flange Face Dimensions	Shaft-end Dimensions
	LB	S
20A□BT76	$270^{-0.056}_{-0.137}\left(10.6^{-0.0022}_{-0.0054}\right)$	$60^{0}_{-0.019}\left(2.36^{0}_{-0.0007}\right)$
30A□BTC6	$270^{-0.056}_{-0.137}\left(10.6^{-0.0022}_{-0.0054}\right)$	$60^{0}_{-0.019}\left(2.36^{0}_{-0.0007}\right)$
30A□BT76	$316^{-0.062}_{-0.151}\left(12.4^{-0.0024}_{-0.0059}\right)$	$70^{0}_{-0.019}\left(2.76^{0}_{-0.0007}\right)$
40A□BTC6	$316^{-0.062}_{-0.151}\left(12.4^{-0.0024}_{-0.0059}\right)$	$70^{0}_{-0.019}\left(2.76^{0}_{-0.0007}\right)$
40A□BT76	$316^{-0.062}_{-0.151}\left(12.4^{-0.0024}_{-0.0059}\right)$	$70^{0}_{-0.019}\left(2.76^{0}_{-0.0007}\right)$
55A□BTB6	$270^{-0.056}_{-0.137}\left(10.6^{-0.0022}_{-0.0054}\right)$	$60^{0}_{-0.019}\left(2.36^{0}_{-0.0007}\right)$
55A□BTC6	$316^{-0.062}_{-0.151}\left(12.4^{-0.0024}_{-0.0059}\right)$	$70^{0}_{-0.019}\left(2.76^{0}_{-0.0007}\right)$
55A□BT76	$345^{-0.062}_{-0.151}\left(13.6^{-0.0024}_{-0.0059}\right)$	$80^{0}_{-0.019}\left(3.15^{0}_{-0.0007}\right)$

INFO

■ Lubrication

• Oil lubricating type (frame numbers: 4130 to 4190)

Servomotors of this type have been shipped with oil removed. Be sure to supply oil until the red line at the upper side of the oil gauge.

Lubrication oil recommended is industrial-use extreme-pressure gear oil of SP-system, JIS K 2219 industrial-use gear oil or equivalent. Refer to the following table.

Ambient Temperature	Manufacturer		
	COSMO Oil Co., Ltd.	Nippon Oil Co., Ltd.	Tonen General Sekiyu K. K.
0 to 35 °C (32 to 95 °F)	COSMO Gear SE 100, 150	BON-NOCK M 100, 150	GENERAL SP Gear Roll 100, 150

The following shows approximate oil amount to be supplied.

Units: liter

Frame No.	4130 4135	4145	4155	4160 4165	4170 4175	4180 4185	4190
Horizontal type	0.7	0.7	0.7	1.4	1.9	2.5	4.0

3.15.5 SGMGH Servomotors (1000 min^{-1}) With Low-backlash Gears and Without Brakes (Flange-mounted Type)

(1) Small Grease Lubricating Type

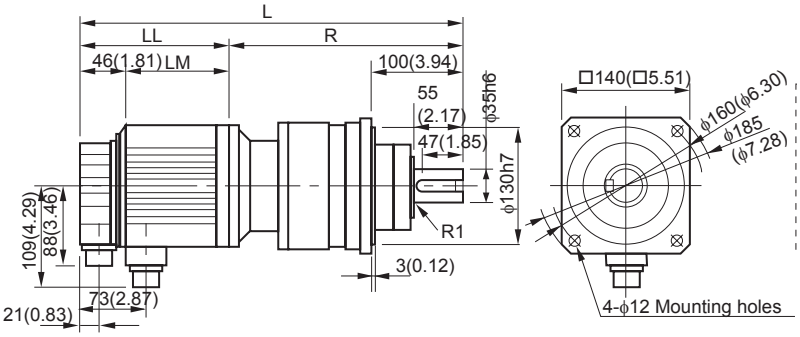

• Applied Specifications for Shaft-end Tap

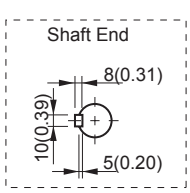

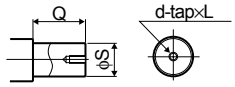

Frame No.	Dia.S	Length Q	d × L mm
ANFJ-L20	35 (1.38)	55 (2.17)	M8 × 16
ANFJ-L30	50 (1.97)	75 (2.95)	M10 × 20
ANFJ-L40	60 (2.36)	90 (3.54)	M12 × 24

• Detailed Dimensions of IMT Gears

ANFJ-L20

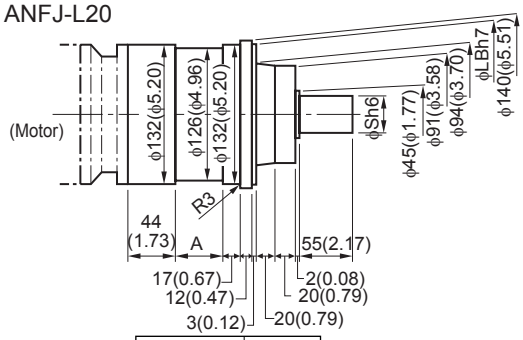

Gear Ratio	A
1/5	6 (0.24)
1/9	18 (0.71)
1/20, 1/29	39 (1.54)
1/45	47 (1.85)

ANFJ-L30

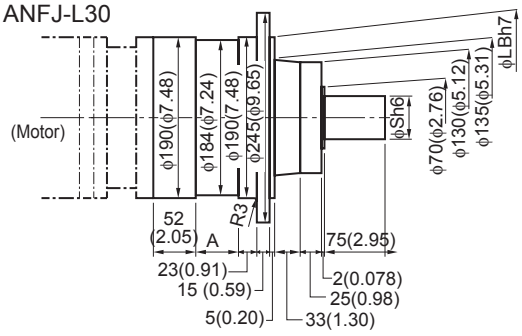

Gear Ratio	A
1/5	11 (0.43)
1/9	38 (1.50)
1/20, 1/29	46 (1.81)
1/45	52 (2.05)

ANFJ-L40

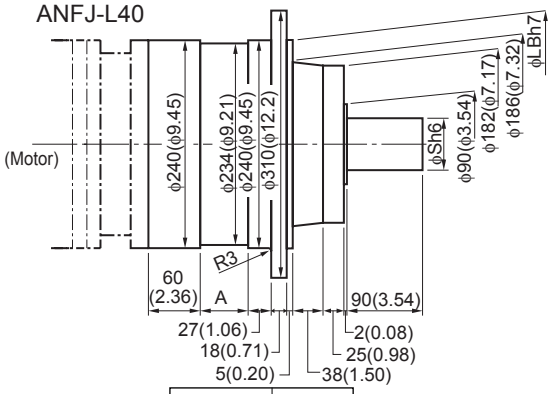

Gear Ratio	A
1/5	16 (0.63)
1/9	48 (1.89)
1/20, 1/29	55 (2.17)
1/45	58 (2.28)

3.15.5 SGMGH Servomotors (1000 min^{-1}) With Low-backlash Gears and Without Brakes (Flange-mounted Type)

- Dimensional Tolerances

Units: mm (in)

IMT Gear	Flange Face Dimensions	Shaft-end Dimensions
	LB	S
ANFJ-L20	$130^{0}_{-0.040}\left(5.12^{0}_{-0.0016}\right)$	$35^{0}_{-0.016}\left(1.38^{0}_{-0.0006}\right)$
ANFJ-L30	$190^{0}_{-0.046}\left(7.48^{0}_{-0.0018}\right)$	$50^{0}_{-0.016}\left(1.97^{0}_{-0.0006}\right)$
ANFJ-L40	$240^{0}_{-0.046}\left(9.45^{0}_{-0.0018}\right)$	$60^{0}_{-0.019}\left(2.36^{0}_{-0.0007}\right)$

Units: mm (in)

Model SGMGH-	Gear Type	Gear Ratio	L	LL	LM	R	Approx. Mass kg (lb)	Shaft Center Allowable Radial Load N (lbf)
03A□BL14	ANFJ-L20	1/5	394 (15.5)	138 (5.43)	92 (3.62)	256 (10.1)	14 (30.9)	833 (187)
03A□BL24		1/9	406 (16.0)	138 (5.43)	92 (3.62)	268 (10.6)	14 (30.9)	980 (221)
03A□BL54		1/20	425 (16.7)	138 (5.43)	92 (3.62)	287 (11.3)	16 (35.3)	1270 (286)
06A□BL14		1/5	417 (16.4)	161 (6.34)	115 (4.53)	256 (10.1)	16 (35.3)	833 (187)
06A□BL24		1/9	429 (16.9)	161 (6.34)	115 (4.53)	268 (10.6)	16 (35.3)	980 (221)
09A□BL14		1/5	441 (17.4)	185 (7.28)	139 (5.47)	256 (10.1)	18 (39.7)	833 (187)

INFO

■ Lubrication

- Since grease has been filled prior to shipment, the servomotors can be used without replenishing grease.

(2) Large Grease Lubricating Type

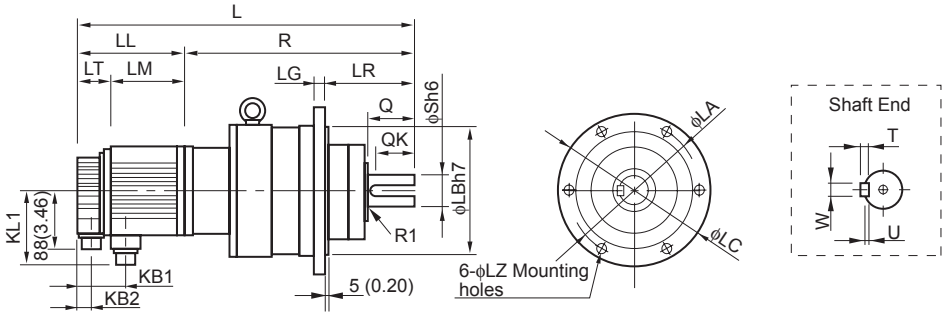

- Applied Specifications of Shaft-end Tap

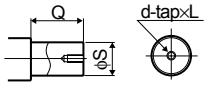

Frame No.	Dia.S	Length Q	d × L mm
ANFJ-L20	35	55	M8 × 16
ANFJ-L30	50	75	M10 × 20
ANFJ-L40	60	90	M12 × 24

Units: mm (in)

Model SGMGH-	Gear Model	Gear Ratio	L	LL	LM	LR	LT	KB1	KB2	KL1	R	Shaft Center Allowable Radial Load N (lbf)
03A□BL74	ANFJ-L30	1/29	491 (19.3)	138 (5.43)	92 (3.62)	140 (5.51)	46 (1.81)	73 (2.87)	21 (0.83)	109 (4.29)	353 (13.9)	2940 (662)
03A□BL84		1/45	501 (19.7)	138 (5.43)	92 (3.62)	140 (5.51)	46 (1.81)	73 (2.87)	21 (0.83)	109 (4.29)	363 (14.3)	3430 (772)
06A□BL54		1/20	514 (20.2)	161 (6.34)	115 (4.53)	140 (5.51)	46 (1.81)	73 (2.87)	21 (0.83)	109 (4.29)	353 (13.9)	2650 (596)
06A□BL74		1/29	514 (20.2)	161 (6.34)	115 (4.53)	140 (5.51)	46 (1.81)	73 (2.87)	21 (0.83)	109 (4.29)	353 (13.9)	2940 (662)
06A□BL84	ANFJ-L40	1/45	565 (22.2)	161 (6.34)	115 (4.53)	160 (6.30)	46 (1.81)	73 (2.87)	21 (0.83)	109 (4.29)	404 (15.9)	8040 (1809)
09A□BL24	ANFJ-L30	1/9	534 (21.0)	185 (7.28)	139 (5.47)	140 (5.51)	46 (1.81)	73 (2.87)	21 (0.83)	109 (4.29)	349 (13.7)	1960 (441)
09A□BL54		1/20	538 (21.2)	185 (7.28)	139 (5.47)	140 (5.51)	46 (1.81)	73 (2.87)	21 (0.83)	109 (4.29)	353 (13.9)	2650 (596)
09A□BL74	ANFJ-L40	1/29	579 (22.8)	185 (7.28)	139 (5.47)	160 (6.30)	46 (1.81)	73 (2.87)	21 (0.83)	109 (4.29)	394 (15.5)	6860 (1544)
09A□BL84		1/45	589 (23.2)	185 (7.28)	139 (5.47)	160 (6.30)	46 (1.81)	73 (2.87)	21 (0.83)	109 (4.29)	404 (15.9)	8040 (1809)
12A□BL14	ANFJ-L30	1/5	509 (20.0)	166 (6.54)	119 (4.69)	140 (5.51)	47 (1.85)	77 (3.03)	22 (0.87)	140 (5.51)	343 (13.5)	1670 (376)
12A□BL24		1/9	536 (21.1)	166 (6.54)	119 (4.69)	140 (5.51)	47 (1.85)	77 (3.03)	22 (0.87)	140 (5.51)	370 (14.6)	1960 (441)
12A□BL54	ANFJ-L40	1/20	581 (22.9)	166 (6.54)	119 (4.69)	160 (6.30)	47 (1.85)	77 (3.03)	22 (0.87)	140 (5.51)	415 (16.3)	6080 (1368)
12A□BL74		1/29	581 (22.9)	166 (6.54)	119 (4.69)	160 (6.30)	47 (1.85)	77 (3.03)	22 (0.87)	140 (5.51)	415 (16.3)	6860 (1544)
12A□BL84		1/45	591 (23.3)	166 (6.54)	119 (4.69)	160 (6.30)	47 (1.85)	77 (3.03)	22 (0.87)	140 (5.51)	425 (16.7)	8040 (1809)
20A□BL14	ANFJ-L30	1/5	535 (21.1)	192 (7.56)	145 (5.71)	140 (5.51)	47 (1.85)	77 (3.03)	22 (0.87)	140 (5.51)	343 (13.5)	1670 (376)
20A□BL24		1/9	562 (22.1)	192 (7.56)	145 (5.71)	140 (5.51)	47 (1.85)	77 (3.03)	22 (0.87)	140 (5.51)	370 (14.6)	1960 (441)
20A□BL54	ANFJ-L40	1/20	607 (23.9)	192 (7.56)	145 (5.71)	160 (6.30)	47 (1.85)	77 (3.03)	22 (0.87)	140 (5.51)	415 (16.3)	6080 (1368)
30A□BL14		1/5	609 (24.0)	226 (8.90)	179 (7.05)	160 (6.30)	47 (1.85)	77 (3.03)	22 (0.87)	140 (5.51)	383 (15.1)	3820 (860)
30A□BL24		1/9	641 (25.2)	226 (8.90)	179 (7.05)	160 (6.30)	47 (1.85)	77 (3.03)	22 (0.87)	140 (5.51)	415 (16.3)	4700 (1058)

Model SGMGH-	Gear Ratio	Flange Face Dimensions mm (in)					Shaft-end Dimensions mm (in)						Approx. Mass kg (lb)
		LA	LB	LC	LG	LZ	Q	QK	S	T	U	W	
03A□BL74	1/29	220 (8.66)	190 (7.48)	245 (9.65)	15 (0.59)	12 (0.47)	75 (2.95)	65 (2.56)	50 (1.97)	9 (0.35)	5.5 (0.22)	14 (0.55)	31 (68.3)
03A□BL84	1/45	220 (8.66)	190 (7.48)	245 (9.65)	15 (0.59)	12 (0.47)	75 (2.95)	65 (2.56)	50 (1.97)	9 (0.35)	5.5 (0.22)	14 (0.55)	31 (68.3)

3.15.5 SGMGH Servomotors (1000 min^{-1}) With Low-backlash Gears and Without Brakes (Flange-mounted Type)

Model SGMGH-	Gear Ratio	Flange Face Dimensions mm (in)					Shaft-end Dimensions mm (in)						Approx. Mass kg (lb)
		LA	LB	LC	LG	LZ	Q	QK	S	T	U	W	
06A□BL54	1/20	220 (8.66)	190 (7.48)	245 (9.65)	15 (0.59)	12 (0.47)	75 (2.95)	65 (2.56)	50 (1.97)	9 (0.35)	5.5 (0.22)	14 (0.55)	33 (72.8)
06A□BL74	1/29	220 (8.66)	190 (7.48)	245 (9.65)	15 (0.59)	12 (0.47)	75 (2.95)	65 (2.56)	50 (1.97)	9 (0.35)	5.5 (0.22)	14 (0.55)	33 (72.8)
06A□BL84	1/45	280 (11.0)	240 (9.45)	310 (12.2)	18 (0.71)	14 (0.55)	90 (3.54)	78 (3.07)	60 (2.36)	11 (0.43)	7 (0.28)	18 (0.71)	53 (117)
09A□BL24	1/9	220 (8.66)	190 (7.48)	245 (9.65)	15 (0.59)	12 (0.47)	75 (2.95)	65 (2.56)	50 (1.97)	9 (0.35)	5.5 (0.22)	14 (0.55)	35 (77.2)
09A□BL54	1/20	220 (8.66)	190 (7.48)	245 (9.65)	15 (0.59)	12 (0.47)	75 (2.95)	65 (2.56)	50 (1.97)	9 (0.35)	5.5 (0.22)	14 (0.55)	35 (77.2)
09A□BL74	1/29	280 (11.0)	240 (9.45)	310 (12.2)	18 (0.71)	14 (0.55)	90 (3.54)	78 (3.07)	60 (2.36)	11 (0.43)	7 (0.28)	18 (0.71)	55 (121)
09A□BL84	1/45	280 (11.0)	240 (9.45)	310 (12.2)	18 (0.71)	14 (0.55)	90 (3.54)	78 (3.07)	60 (2.36)	11 (0.43)	7 (0.28)	18 (0.71)	55 (121)
12A□BL14	1/5	220 (8.66)	190 (7.48)	245 (9.65)	15 (0.59)	12 (0.47)	75 (2.95)	65 (2.56)	50 (1.97)	9 (0.35)	5.5 (0.22)	14 (0.55)	32 (70.5)
12A□BL24	1/9	220 (8.66)	190 (7.48)	245 (9.65)	15 (0.59)	12 (0.47)	75 (2.95)	65 (2.56)	50 (1.97)	9 (0.35)	5.5 (0.22)	14 (0.55)	39 (86.0)
12A□BL54	1/20	280 (11.0)	240 (9.45)	310 (12.2)	18 (0.71)	14 (0.55)	90 (3.54)	78 (3.07)	60 (2.36)	11 (0.43)	7 (0.28)	18 (0.71)	59 (130)
12A□BL74	1/29	280 (11.0)	240 (9.45)	310 (12.2)	18 (0.71)	14 (0.55)	90 (3.54)	78 (3.07)	60 (2.36)	11 (0.43)	7 (0.28)	18 (0.71)	59 (130)
12A□BL84	1/45	280 (11.0)	240 (9.45)	310 (12.2)	18 (0.71)	14 (0.55)	90 (3.54)	78 (3.07)	60 (2.36)	11 (0.43)	7 (0.28)	18 (0.71)	59 (130)
20A□BL14	1/5	220 (8.66)	190 (7.48)	245 (9.65)	15 (0.59)	12 (0.47)	75 (2.95)	65 (2.56)	50 (1.97)	9 (0.35)	5.5 (0.22)	14 (0.55)	36 (79.4)
20A□BL24	1/9	220 (8.66)	190 (7.48)	245 (9.65)	15 (0.59)	12 (0.47)	75 (2.95)	65 (2.56)	50 (1.97)	9 (0.35)	5.5 (0.22)	14 (0.55)	43 (94.8)
20A□BL54	1/20	280 (11.0)	240 (9.45)	310 (12.2)	18 (0.71)	14 (0.55)	90 (3.54)	78 (3.07)	60 (2.36)	11 (0.43)	7 (0.28)	18 (0.71)	63 (139)
30A□BL14	1/5	280 (11.0)	240 (9.45)	310 (12.2)	18 (0.71)	14 (0.55)	90 (3.54)	78 (3.07)	60 (2.36)	11 (0.43)	7 (0.28)	18 (0.71)	58 (128)
30A□BL24	1/9	280 (11.0)	240 (9.45)	310 (12.2)	18 (0.71)	14 (0.55)	90 (3.54)	78 (3.07)	60 (2.36)	11 (0.43)	7 (0.28)	18 (0.71)	68 (150)

INFO

■ Lubrication

- Since grease has been filled prior to shipment, the servomotors can be used without replenishing grease.

3.16 Dimensional Drawings of SGMSH Servomotors (3000min^{-1})

3.16.1 SGMSH Servomotors (3000min^{-1}) Without Gears and Without Brakes

Models with oil seals are of the same configuration.

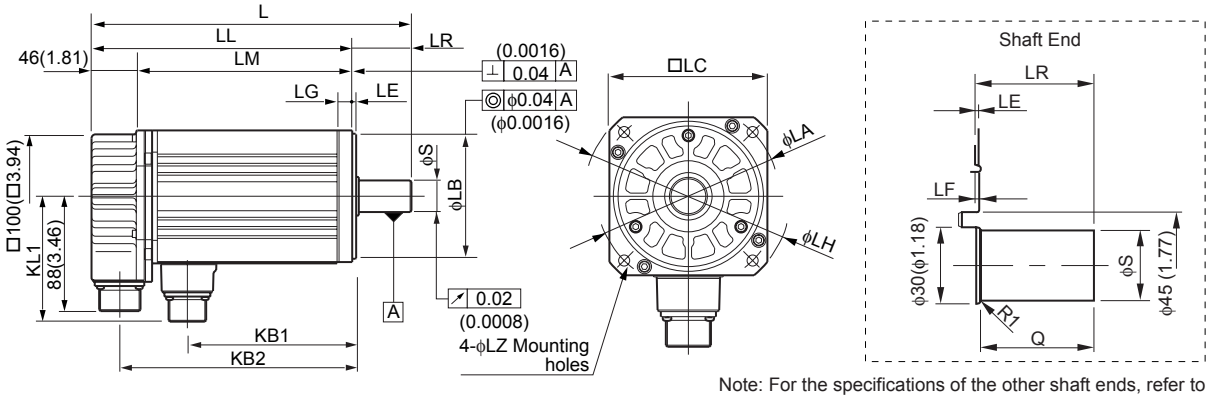

Note: For the specifications of the other shaft ends, refer to *3.19 Shaft End Specifications for SGMGH, SGMSH and SGMDH Servomotors.*

Units: mm (in)

Models SGMSH-	L	LL	LM	LR	KB1	KB2	KL1	Shaft-end Dimensions S	Shaft-end Dimensions Q	Approx. Mass kg (lb)
10A□A21	194 (7.64)	149 (5.87)	103 (4.06)	45 (1.77)	76 (2.99)	128 (5.04)	96 (3.78)	$24^{0}_{-0.013}$ $\left(0.94^{0}_{-0.0005}\right)$	40 (1.57)	4.6 (10.1)
10D□A21										
15A□A21	220 (8.66)	175 (6.89)	129 (5.08)	45 (1.77)	102 (4.02)	154 (6.06)	96 (3.78)	$24^{0}_{-0.013}$ $\left(0.94^{0}_{-0.0005}\right)$	40 (1.57)	5.8 (12.8)
15D□A21										
20A□A21	243 (9.57)	198 (7.80)	152 (5.98)	45 (1.77)	125 (4.92)	177 (6.97)	96 (3.78)	$24^{0}_{-0.013}$ $\left(0.94^{0}_{-0.0005}\right)$	40 (1.57)	7.0 (15.4)
20D□A21										
30A□A21	262 (10.3)	199 (7.83)	153 (6.02)	63 (2.48)	124 (4.88)	178 (7.01)	114 (4.49)	$28^{0}_{-0.013}$ $\left(1.10^{0}_{-0.0005}\right)$	55 (2.17)	11 (24.3)
30D□A21										
40A□A21	299 (11.8)	236 (9.29)	190 (7.48)	63 (2.48)	161 (6.34)	215 (8.46)	114 (4.49)	$28^{0}_{-0.013}$ $\left(1.10^{0}_{-0.0005}\right)$	55 (2.17)	14 (30.9)
40D□A21										
50A□A21	339 (13.3)	276 (10.9)	230 (9.06)	63 (2.48)	201 (7.91)	255 (10.0)	114 (4.49)	$28^{0}_{-0.013}$ $\left(1.10^{0}_{-0.0005}\right)$	55 (2.17)	17 (37.5)
50D□A21										

3.16.1 SGMSH Servomotors (3000min^{-1}) Without Gears and Without Brakes

Model SGMSH-	Flange Face Dimensions mm (in)								Allowable Radial Load N (lbf)	Allowable Thrust Load N (lbf)
	LA	LB	LC	LE	LF	LG	LH	LZ		
10A□A21	115 (4.53)	$95^{0}_{-0.035}$ $\left(3.74^{0}_{-0.0014}\right)$	100 (3.94)	3 (0.12)	3 (0.12)	10 (0.39)	130 (5.12)	7 (0.28)	686 (154)	196 (44)
10D□A21										
15A□A21	115 (4.53)	$95^{0}_{-0.035}$ $\left(3.74^{0}_{-0.0014}\right)$	100 (3.94)	3 (0.12)	3 (0.12)	10 (0.39)	130 (5.12)	7 (0.28)	686 (154)	196 (44)
15D□A21										
20A□A21	115 (4.53)	$95^{0}_{-0.035}$ $\left(3.74^{0}_{-0.0014}\right)$	100 (3.94)	3 (0.12)	3 (0.12)	10 (0.39)	130 (5.12)	7 (0.28)	686 (154)	196 (44)
20D□A21										
30A□A21	145 (5.71)	$110^{0}_{-0.035}$ $\left(4.33^{0}_{-0.0014}\right)$	130 (5.12)	6 (0.24)	6 (0.24)	12 (0.47)	165 (6.50)	9 (0.35)	980 (221)	392 (88)
30D□A21										
40A□A21	145 (5.71)	$110^{0}_{-0.035}$ $\left(4.33^{0}_{-0.0014}\right)$	130 (5.12)	6 (0.24)	6 (0.24)	12 (0.47)	165 (6.50)	9 (0.35)	1176 (265)	392 (88)
40D□A21										
50A□A21	145 (5.71)	$110^{0}_{-0.035}$ $\left(4.33^{0}_{-0.0014}\right)$	130 (5.12)	6 (0.24)	6 (0.24)	12 (0.47)	165 (6.50)	9 (0.28)	1176 (265)	392 (88)
50D□A21										

- Cable Specifications for Detector Connectors (17-bit Encoder)

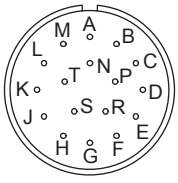

Receptacle: MS3102A20-29P
Applicable plug (Purchased by the customer)
Plug: MS3108B20-29S
Cale clamp: MS3057-12A

With an Absolute Encoder

A	–	K	–
B	–	L	–
C	DATA+	M	–
D	DATA-	N	–
E	–	P	–
F	–	R	–
G	0V	S	BATT-
H	+5VDC	T	BATT+
J	FG(Frame ground)	–	–

With an Incremental Encoder

A	–	K	–
B	–	L	–
C	DATA+	M	–
D	DATA-	N	–
E	–	P	–
F	–	R	–
G	0V	S	–
H	+5VDC	T	–
J	FG(Frame ground)	–	–

- Cable Specifications for Servomotor Connectors

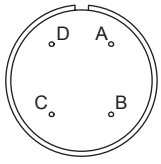

A	Phase U
B	Phase V
C	Phase W
D	FG (Frame ground)

3.16.2 SGMSH Servomotors (3000 min^{-1}) 200-V Specifications Without Gears With Brakes

Models with oil seals are of the same configuration.

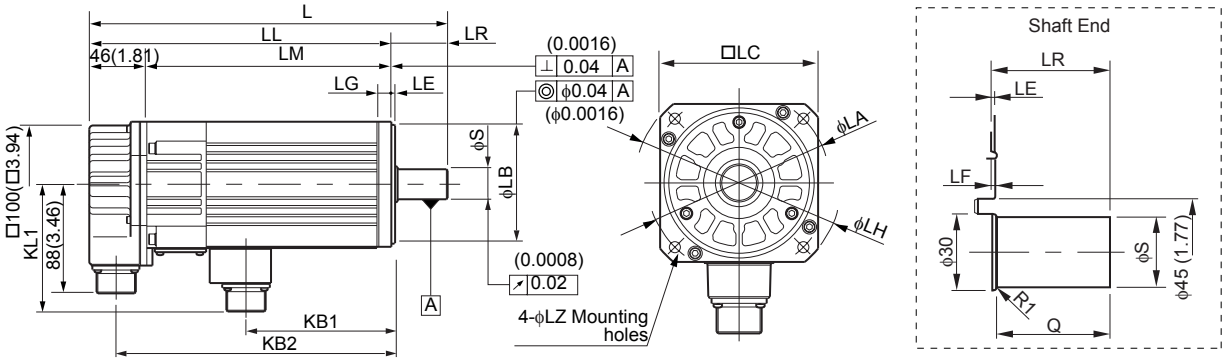

Note: For the specifications of the other shaft ends, refer to *3.19 Shaft End Specifications for SGMGH, SGMSH and SGMDH Servomotors*.

3

Units: mm (in)

Model SGMSH-	L	LL	LM	LR	KB1	KB2	KL1	Shaft-end Dimensions S	Shaft-end Dimensions Q	Approx. Mass kg (lb)
10A□A2B	238 (9.37)	193 (7.60)	147 (5.79)	45 (1.77)	67 (2.64)	171 (6.73)	102 (4.02)	$24^{0}_{-0.013}$ $\left(0.94^{0}_{-0.0005}\right)$	40 (1.57)	6.0 (13.2)
15A□A2B	264 (10.4)	219 (8.62)	173 (6.81)	45 (1.77)	93 (3.66)	197 (7.76)	102 (4.02)	$24^{0}_{-0.013}$ $\left(0.94^{0}_{-0.0005}\right)$	40 (1.57)	7.5 (16.5)
20A□A2B	287 (11.3)	242 (9.53)	196 (7.72)	45 (1.77)	116 (4.57)	220 (8.66)	102 (4.02)	$24^{0}_{-0.013}$ $\left(0.94^{0}_{-0.0005}\right)$	40 (1.57)	8.5 (18.7)
30A□A2B	300 (11.8)	237 (9.33)	191 (7.52)	63 (2.48)	114 (4.49)	216 (8.50)	119 (4.69)	$28^{0}_{-0.013}$ $\left(1.10^{0}_{-0.0005}\right)$	55 (2.17)	14 (30.9)
40A□A2B	337 (13.3)	274 (10.8)	228 (8.98)	63 (2.48)	151 (5.94)	253 (9.96)	119 (4.69)	$28^{0}_{-0.013}$ $\left(1.10^{0}_{-0.0005}\right)$	55 (2.17)	17 (37.5)
50A□A2B	377 (14.8)	314 (12.4)	268 (10.6)	63 (2.48)	191 (7.52)	293 (11.5)	119 (4.69)	$28^{0}_{-0.013}$ $\left(1.10^{0}_{-0.0005}\right)$	55 (2.17)	20 (44.1)

3.16.2 SGMSH Servomotors (3000 min^{-1}) 200-V Specifications Without Gears With Brakes

Units: mm (in)

Model SGMSH-	Flange Face Dimensions mm (in)								Allowable Radial Load N (lbf)	Allowable Thrust Load N (lbf)
	LA	LB	LC	LE	LF	LG	LH	LZ		
10A□A2B	115 (4.53)	$95^{0}_{-0.035}$ $\left(3.74^{0}_{-0.0014}\right)$	100 (3.94)	3 (0.12)	3 (0.12)	10 (0.39)	130 (5.12)	7 (0.28)	686 (154)	196 (44)
15A□A2B	115 (4.53)	$95^{0}_{-0.035}$ $\left(3.74^{0}_{-0.0014}\right)$	100 (3.94)	3 (0.12)	3 (0.12)	10 (0.39)	130 (5.12)	7 (0.28)	686 (154)	196 (44)
20A□A2B	115 (4.53)	$95^{0}_{-0.035}$ $\left(3.74^{0}_{-0.0014}\right)$	100 (3.94)	3 (0.12)	3 (0.12)	10 (0.39)	130 (5.12)	7 (0.28)	686 (154)	196 (44)
30A□A2B	145 (5.71)	$110^{0}_{-0.035}$ $\left(4.33^{0}_{-0.0014}\right)$	130 (5.12)	6 (0.24)	6 (0.24)	12 (0.47)	165 (6.50)	9 (0.35)	980 (221)	392 (88)
40A□A2B	145 (5.71)	$110^{0}_{-0.035}$ $\left(4.33^{0}_{-0.0014}\right)$	130 (5.12)	6 (0.24)	6 (0.24)	12 (0.47)	165 (6.50)	9 (0.35)	1176 (265)	392 (88)
50A□A2B	145 (5.71)	$110^{0}_{-0.035}$ $\left(4.33^{0}_{-0.0014}\right)$	130 (5.12)	6 (0.24)	6 (0.24)	12 (0.47)	165 (6.50)	9 (0.35)	1176 (265)	392 (88)

- Cable Specifications for Detector Connectors (17-bit Encoder)

Receptacle: MS3102A20-29P
Applicable plug (Purchased by the customer)
Plug: MS3108B20-29S
Cale clamp: MS3057-12A

With an Absolute Encoder

A	–	K	–
B	–	L	–
C	DATA+	M	–
D	DATA-	N	–
E	–	P	–
F	–	R	–
G	0V	S	BATT-
H	+5VDC	T	BATT+
J	FG (Frame ground)	–	–

- Cable Specifications for Servomotor Connectors

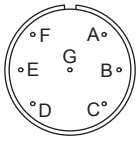

A	Phase U	E	Brake terminal
B	Phase V	F	Brake terminal
C	Phase W	G	–
D	FG (Frame ground)	–	–

With an Incremental Encoder

A	–	K	–
B	–	L	–
C	DATA+	M	–
D	DATA-	N	–
E	–	P	–
F	–	R	–
G	0V	S	–
H	+5VDC	T	–
J	FG(Frame ground)	–	–

3.16.3 SGMSH Servomotors (3000 min^{-1}) 400-V Specifications Without Gears With Brakes

Models with oil seals are of the same configuration.

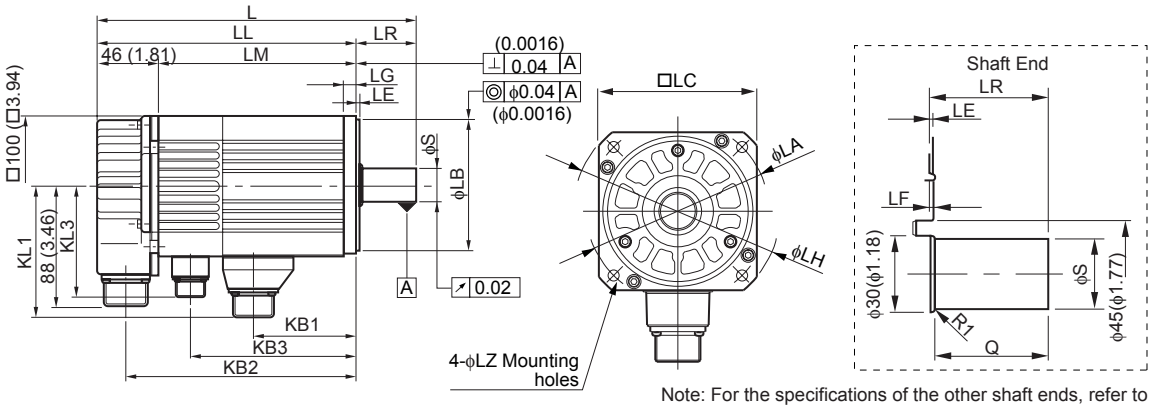

Note: For the specifications of the other shaft ends, refer to *3.19 Shaft End Specifications for SGMGH, SGMSH and SGMDH Servomotors*.

3

Units: mm (in)

Model SGMSH-	L	LL	LM	LR	KB1	KB2	KB3	KL1	KL3	Shaft-end Dimensions		Approx. Mass kg (lb)
										S	Q	
10D□A2□	238 (9.37)	193 (7.60)	147 (5.79)	45 (1.77)	76 (2.99)	171 (6.73)	120 (4.72)	96 (3.78)	85 (3.35)	$24^{0}_{-0.013}$ $\left(0.94^{0}_{-0.0005}\right)$	40 (1.57)	6.0 (13.2)
15D□A2□	264 (10.4)	219 (8.62)	173 (6.81)	45 (1.77)	102 (4.02)	197 (7.76)	146 (5.75)	96 (3.78)	85 (3.35)	$24^{0}_{-0.013}$ $\left(0.94^{0}_{-0.0005}\right)$	40 (1.57)	7.5 (16.5)
20D□A2□	287 (11.3)	242 (9.53)	196 (7.72)	45 (1.77)	125 (4.92)	220 (8.66)	169 (6.65)	96 (3.78)	85 (3.35)	$24^{0}_{-0.013}$ $\left(0.94^{0}_{-0.0005}\right)$	40 (1.57)	8.5 (18.7)
30D□A2□	300 (11.8)	237 (9.33)	191 (7.52)	63 (2.48)	124 (4.88)	216 (8.50)	170 (6.69)	114 (4.49)	98 (3.86)	$28^{0}_{-0.013}$ $\left(1.10^{0}_{-0.0005}\right)$	55 (2.17)	14 (30.9)
40D□A2□	337 (13.3)	274 (10.8)	228 (8.98)	63 (2.48)	161 (6.34)	253 (9.96)	207 (8.15)	114 (4.49)	98 (3.86)	$28^{0}_{-0.013}$ $\left(1.10^{0}_{-0.0005}\right)$	55 (2.17)	17 (37.5)
50D□A2□	377 (14.8)	314 (12.4)	268 (10.6)	63 (2.48)	201 (7.91)	293 (11.5)	247 (9.72)	114 (4.49)	98 (3.86)	$28^{0}_{-0.013}$ $\left(1.10^{0}_{-0.0005}\right)$	55 (2.17)	20 (44.1)

3.16.3 SGMSH Servomotors (3000 min^{-1}) 400-V Specifications Without Gears With Brakes

Model SGMSH-	Flange Face Dimensions mm (in)								Allowable Radial Load N (lbf)	Allowable Thrust Load N (lbf)
	LA	LB	LC	LE	LF	LG	LH	LZ		
10D□A2□	115 (4.53)	$95^{0}_{-0.035}$ $\left(3.74^{0}_{-0.0014}\right)$	100 (3.94)	3 (0.12)	3 (0.12)	10 (0.39)	130 (5.12)	7 (0.28)	686 (154)	196 (44)
15D□A2□	115 (4.53)	$95^{0}_{-0.035}$ $\left(3.74^{0}_{-0.0014}\right)$	100 (3.94)	3 (0.12)	3 (0.12)	10 (0.39)	130 (5.12)	7 (0.28)	686 (154)	196 (44)
20D□A2□	115 (4.53)	$95^{0}_{-0.035}$ $\left(3.74^{0}_{-0.0014}\right)$	100 (3.94)	3 (0.12)	3 (0.12)	10 (0.39)	130 (5.12)	7 (0.28)	686 (154)	196 (44)
30D□A2□	145 (5.71)	$110^{0}_{-0.035}$ $\left(4.33^{0}_{-0.0014}\right)$	130 (5.12)	6 (0.24)	6 (0.24)	12 (0.47)	165 (6.50)	9 (0.35)	980 (221)	392 (88)
40D□A2□	145 (5.71)	$110^{0}_{-0.035}$ $\left(4.33^{0}_{-0.0014}\right)$	130 (5.12)	6 (0.24)	6 (0.24)	12 (0.47)	165 (6.50)	9 (0.35)	1176 (265)	392 (88)
50D□A2□	145 (5.71)	$110^{0}_{-0.035}$ $\left(4.33^{0}_{-0.0014}\right)$	130 (5.12)	6 (0.24)	6 (0.24)	12 (0.47)	165 (6.50)	9 (0.35)	1176 (265)	392 (88)

- Cable Specifications for Detector Connectors (17-bit Encoder)

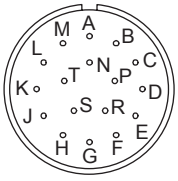

Receptacle: MS3102A20-29P
Applicable plug (Purchased by the customer)
Plug: MS3108B20-29S
Cale clamp: MS3057-12A

With an Absolute Encoder

A	–	K	–
B	–	L	–
C	DATA+	M	–
D	DATA-	N	–
E	–	P	–
F	–	R	–
G	0V	S	BATT-
H	+5VDC	T	BATT+
J	FG(Frame ground)	–	–

With an Incremental Encoder

A	–	K	–
B	–	L	–
C	DATA+	M	–
D	DATA-	N	–
E	–	P	–
F	–	R	–
G	0V	S	–
H	+5VDC	T	–
J	FG(Frame ground)	–	–

- Cable Specifications for Servomotor Connectors

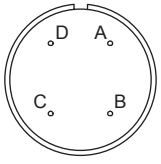

A	Phase U
B	Phase V
C	Phase W
D	FG (Frame ground)

- Cable Specifications for Brake Connectors

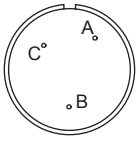

A	Brake terminal
B	Brake terminal
C	–

3.16.4 SGMSH Servomotors (3000 min^{-1}) With Low-backlash Gears and Without Brakes (Flange-mounted Type)

(1) Small Grease Lubricating Type

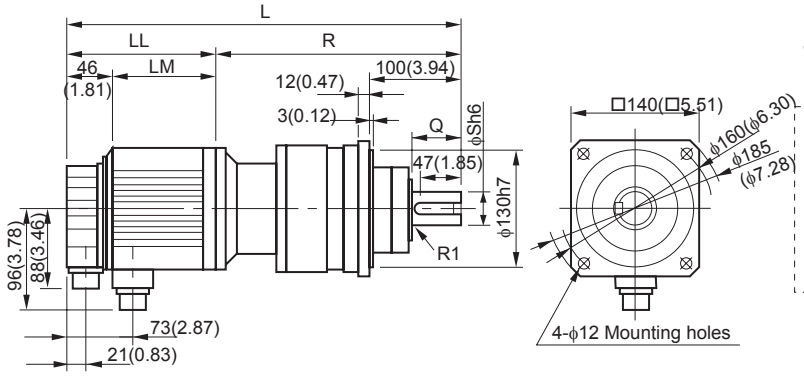

• Applied Specifications for Shaft-end Tap

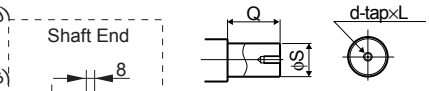

Frame No.	Dia.S	Length Q	d × L mm
ANFJ-L20	35 (1.38)	55 (2.17)	M8 × 16
ANFJ-L30	50 (1.97)	75 (2.95)	M10 × 20
ANFJ-L40	60 (2.36)	90 (3.54)	M12 × 24

• Detailed Dimensions of IMT Gears

ANFJ-L20

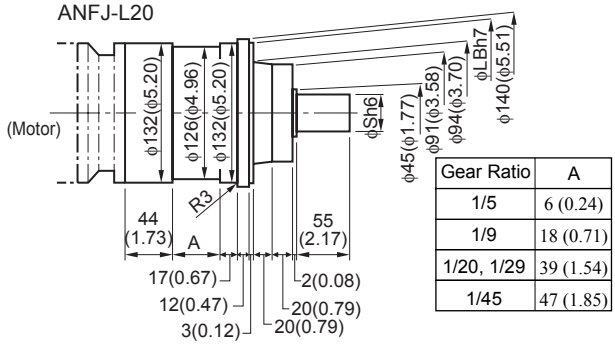

Gear Ratio	A
1/5	6 (0.24)
1/9	18 (0.71)
1/20, 1/29	39 (1.54)
1/45	47 (1.85)

ANFJ-L30

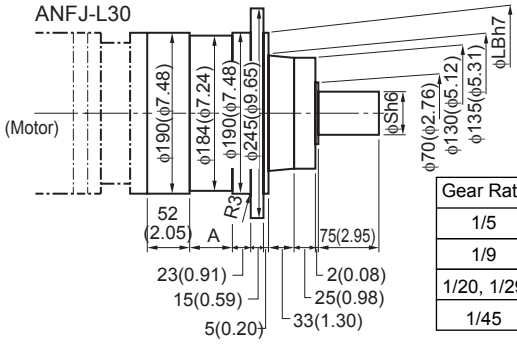

Gear Ratio	A
1/5	11 (0.43)
1/9	38 (1.50)
1/20, 1/29	46 (1.81)
1/45	52 (2.05)

ANFJ-L40

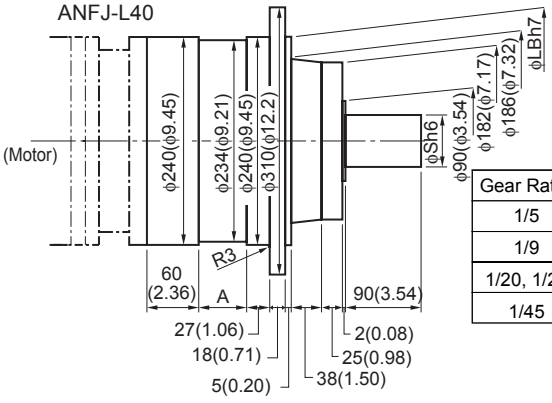

Gear Ratio	A
1/5	16 (0.63)
1/9	48 (1.89)
1/20, 1/29	55 (2.17)
1/45	58 (2.28)

• Dimensional Tolerances

Units: mm (in)

IMT Gear	Flange Face Dimensions	Shaft-end Dimensions
	LB	S
ANFJ-L20	$130^{0}_{-0.040}\left(5.12^{0}_{-0.0016}\right)$	$35^{0}_{-0.016}\left(1.38^{0}_{-0.0006}\right)$
ANFJ-L30	$190^{0}_{-0.046}\left(7.48^{0}_{-0.0018}\right)$	$50^{0}_{-0.016}\left(1.97^{0}_{-0.0006}\right)$
ANFJ-L40	$240^{0}_{-0.046}\left(9.45^{0}_{-0.0018}\right)$	$60^{0}_{-0.019}\left(2.36^{0}_{-0.0007}\right)$

3.16.4 SGMSH Servomotors (3000 min^{-1}) With Low-backlash Gears and Without Brakes (Flange-mounted Type)

Units: mm (in)

Model SGMSH-	Gear Model	Gear Ratio	L	LL	LM	R	Shaft Center Allowable Radial Load N (lbf)	Approx. Mass kg (lb)
10A□AL14	ANFJ-L20	1/5	403 (15.9)	149 (5.87)	103 (4.06)	254 (10.0)	833 (187)	13 (28.7)
10D□AL14								
10A□AL24		1/9	415 (16.3)	149 (5.87)	103 (4.06)	266 (10.5)	980 (221)	13 (28.7)
10D□AL24								
15A□AL14		1/5	429 (16.9)	175 (6.89)	129 (5.08)	254 (10.0)	833 (187)	14 (30.9)
15D□AL14								
20A□AL14		1/5	452 (17.8)	198 (7.80)	152 (5.98)	254 (10.0)	833 (187)	15 (33.1)
20D□AL14								

INFO

■ Lubrication

- Since grease has been filled prior to shipment, the servomotors can be used without replenishing grease.

(2) Large Oil Lubricating Type

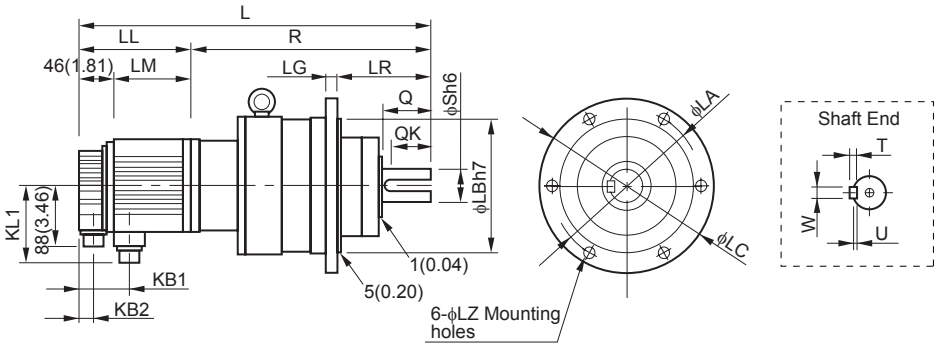

Units: mm (in)

Model SGMSH-	Gear Model	Gear Ratio	L	LL	LM	LR	KB1	KB2	KL1	R	Shaft Center Allowable Radial Load N (lbf)
10A□AL54	ANFJ-L30	1/20	496 (19.5)	149 (5.87)	103 (4.06)	140 (5.51)	73 (2.87)	21 (0.83)	96 (3.78)	347 (13.7)	2650 (596)
10D□AL54											
10A□AL74		1/29	496 (19.5)	149 (5.87)	103 (4.06)	140 (5.51)	73 (2.87)	21 (0.83)	96 (3.78)	347 (13.7)	2940 (662)
10D□AL74											
10A□AL84		1/45	506 (19.9)	149 (5.87)	103 (4.06)	140 (5.51)	73 (2.87)	21 (0.83)	96 (3.78)	357 (14.1)	3430 (772)
10D□AL84											
15A□AL24		1/9	518 (20.4)	175 (6.89)	129 (5.08)	140 (5.51)	73 (2.87)	21 (0.83)	96 (3.78)	343 (13.5)	1960 (441)
15D□AL24											
15A□AL54		1/20	522 (20.6)	175 (6.89)	129 (5.08)	140 (5.51)	73 (2.87)	21 (0.83)	96 (3.78)	347 (13.7)	2650 (596)
15D□AL54											
15A□AL74		1/29	522 (20.6)	175 (6.89)	129 (5.08)	140 (5.51)	73 (2.87)	21 (0.83)	96 (3.78)	347 (13.7)	2940 (662)
15D□AL74											
15A□AL84	ANFJ-L40	1/45	573 (22.6)	175 (6.89)	129 (5.08)	160 (6.30)	73 (2.87)	21 (0.83)	96 (3.78)	398 (15.7)	8040 (1809)
15D□AL84											

Units: mm (in)

Model SGMSH-	Gear Model	Gear Ratio	L	LL	LM	LR	KB1	KB2	KL1	R	Shaft Center Allowable Radial Load N (lbf)
20A□AL24	ANFJ-L30	1/9	541 (21.3)	198 (7.80)	152 (5.98)	140 (5.51)	73 (2.87)	21 (0.83)	96 (3.78)	343 (13.5)	1960 (441)
20D□AL24											
20A□AL54		1/20	545 (21.5)	198 (7.80)	152 (5.98)	140 (5.51)	73 (2.87)	21 (0.83)	96 (3.78)	347 (13.7)	2650 (596)
20D□AL54											
20A□AL74	ANFJ-L40	1/29	586 (23.1)	198 (7.80)	152 (5.98)	160 (6.30)	73 (2.87)	21 (0.83)	96 (3.78)	388 (15.3)	6860 (1543)
20D□AL74											
20A□AL84		1/45	596 (23.5)	198 (7.80)	152 (5.98)	160 (6.30)	73 (2.87)	21 (0.83)	96 (3.78)	398 (15.7)	8040 (1809)
20D□AL84											
30A□AL14	ANFJ-L30	1/5	540 (21.3)	199 (7.83)	153 (6.02)	140 (5.51)	77 (3.03)	22 (0.87)	114 (4.49)	341 (13.4)	1670 (376)
30D□AL14											
30A□AL24		1/9	567 (22.3)	199 (7.83)	153 (6.02)	140 (5.51)	77 (3.03)	22 (0.87)	114 (4.49)	368 (14.5)	1960 (441)
30D□AL24											
30A□AL54	ANFJ-L40	1/20	612 (24.1)	199 (7.83)	153 (6.02)	160 (6.30)	77 (3.03)	22 (0.87)	114 (4.49)	413 (16.3)	6080 (1368)
30D□AL54											
30A□AL74		1/29	612 (24.1)	199 (7.83)	153 (6.02)	160 (6.30)	77 (3.03)	22 (0.87)	114 (4.49)	413 (16.3)	6860 (1543)
30D□AL74											
30A□AL84		1/45	622 (24.5)	199 (7.83)	153 (6.02)	160 (6.30)	77 (3.03)	22 (0.87)	114 (4.49)	423 (16.7)	8040 (1809)
30D□AL84											
40A□AL14	ANFJ-L30	1/5	577 (22.7)	236 (9.29)	190 (7.48)	140 (5.51)	77 (3.03)	22 (0.87)	114 (4.49)	341 (13.4)	1670 (376)
40A□AL24	ANFJ-L40	1/9	649 (25.6)	236 (9.29)	190 (7.48)	160 (6.30)	77 (3.03)	22 (0.87)	114 (4.49)	413 (16.3)	4700 (1058)
40A□AL54		1/20	649 (25.6)	236 (9.29)	190 (7.48)	160 (6.30)	77 (3.03)	22 (0.87)	114 (4.49)	413 (16.3)	6080 (1368)
40A□AL74		1/29	649 (25.6)	236 (9.29)	190 (7.48)	160 (6.30)	77 (3.03)	22 (0.87)	114 (4.49)	413 (16.3)	6860 (1544)
50A□AL14		1/5	657 (25.9)	276 (10.9)	230 (9.06)	160 (6.30)	77 (3.03)	22 (0.87)	114 (4.49)	381 (15.0)	3820 (860)
50A□AL24		1/9	689 (27.1)	276 (10.9)	230 (9.06)	160 (6.30)	77 (3.03)	22 (0.87)	114 (4.49)	413 (16.3)	4700 (1058)
50A□AL54		1/20	689 (27.1)	276 (10.9)	230 (9.06)	160 (6.30)	77 (3.03)	22 (0.87)	114 (4.49)	413 (16.3)	6080 (1368)

Model SGMSH-	Gear Ratio	Flange Face Dimensions mm (in)					Shaft-end Dimensions mm (in)						Approx. Mass kg (lb)
		LA	LB	LC	LG	LZ	Q	QK	S	T	U	W	
10A□AL54	1/20	220 (8.66)	190 (7.48)	245 (9.65)	15 (0.59)	12 (0.47)	75 (2.95)	65 (2.56)	50 (1.97)	9 (0.35)	5.5 (0.22)	14 (0.55)	30 (66.1)
10D□AL54													
10A□AL74	1/29	220 (8.66)	190 (7.48)	245 (9.65)	15 (0.59)	12 (0.47)	75 (2.95)	65 (2.56)	50 (1.97)	9 (0.35)	5.5 (0.22)	14 (0.55)	30 (66.1)
10D□AL74													
10A□AL84	1/45	220 (8.66)	190 (7.48)	245 (9.65)	15 (0.59)	12 (0.47)	75 (2.95)	65 (2.56)	50 (1.97)	9 (0.35)	5.5 (0.22)	14 (0.55)	30 (66.1)
10D□AL84													
15A□AL24	1/9	220 (8.66)	190 (7.48)	245 (9.65)	15 (0.59)	12 (0.47)	75 (2.95)	65 (2.56)	50 (1.97)	9 (0.35)	5.5 (0.22)	14 (0.55)	31 (68.3)
15D□AL24													

3.16.4 SGMSH Servomotors (3000 min^{-1}) With Low-backlash Gears and Without Brakes (Flange-mounted Type)

Model SGMSH-	Gear Ratio	Flange Face Dimensions mm (in)					Shaft-end Dimensions mm (in)						Approx. Mass kg (lb)
		LA	LB	LC	LG	LZ	Q	QK	S	T	U	W	
15A□AL54 15D□AL54	1/20	220 (8.66)	190 (7.48)	245 (9.65)	15 (0.59)	12 (0.47)	75 (2.95)	65 (2.56)	50 (1.97)	9 (0.35)	5.5 (0.22)	14 (0.55)	31 (68.3)
15A□AL74 15D□AL74	1/29	220 (8.66)	190 (7.48)	245 (9.65)	15 (0.59)	12 (0.47)	75 (2.95)	65 (2.56)	50 (1.97)	9 (0.35)	5.5 (0.22)	14 (0.55)	31 (68.3)
15A□AL84 15D□AL84	1/45	280 (11.0)	240 (9.45)	310 (12.2)	18 (0.71)	14 (0.55)	90 (3.54)	78 (3.07)	60 (2.36)	11 (0.43)	7 (0.28)	18 (0.71)	51 (112)
20A□AL24 20D□AL24	1/9	220 (8.66)	190 (7.48)	245 (9.65)	15 (0.59)	12 (0.47)	75 (2.95)	65 (2.56)	50 (1.97)	9 (0.35)	5.5 (0.22)	14 (0.55)	32 (70.5)
20A□AL54 20D□AL54	1/20	220 (8.66)	190 (7.48)	245 (9.65)	15 (0.59)	12 (0.47)	75 (2.95)	65 (2.56)	50 (1.97)	9 (0.35)	5.5 (0.22)	14 (0.55)	32 (70.5)
20A□AL74 20D□AL74	1/29	280 (11.0)	240 (9.45)	310 (12.2)	18 (0.71)	14 (0.55)	90 (3.54)	78 (3.07)	60 (2.36)	11 (0.43)	7 (0.28)	18 (0.71)	52 (115)
20A□AL84 20D□AL84	1/45	280 (11.0)	240 (9.45)	310 (12.2)	18 (0.71)	14 (0.55)	90 (3.54)	78 (3.07)	60 (2.36)	11 (0.43)	7 (0.28)	18 (0.71)	52 (115)
30A□AL14 30D□AL14	1/5	220 (8.66)	190 (7.48)	245 (9.65)	15 (0.59)	12 (0.47)	75 (2.95)	65 (2.56)	50 (1.97)	9 (0.35)	5.5 (0.22)	14 (0.55)	29 (63.9)
30A□AL24 30D□AL24	1/9	220 (8.66)	190 (7.48)	245 (9.65)	15 (0.59)	12 (0.47)	75 (2.95)	65 (2.56)	50 (1.97)	9 (0.35)	5.5 (0.22)	14 (0.55)	36 (79.4)
30A□AL54 30D□AL54	1/20	280 (11.0)	240 (9.45)	310 (12.2)	18 (0.71)	14 (0.55)	90 (3.54)	78 (3.07)	60 (2.36)	11 (0.43)	7 (0.28)	18 (0.71)	56 (123)
30A□AL74 30D□AL74	1/29	280 (11.0)	240 (9.45)	310 (12.2)	18 (0.71)	14 (0.55)	90 (3.54)	78 (3.07)	60 (2.36)	11 (0.43)	7 (0.28)	18 (0.71)	56 (123)
30A□AL84 30D□AL84	1/45	280 (11.0)	240 (9.45)	310 (12.2)	18 (0.71)	14 (0.55)	90 (3.54)	78 (3.07)	60 (2.36)	11 (0.43)	7 (0.28)	18 (0.71)	56 (123)
40A□AL14	1/5	220 (8.66)	190 (7.48)	245 (9.65)	15 (0.59)	12 (0.47)	75 (2.95)	65 (2.56)	50 (1.97)	9 (0.35)	5.5 (0.22)	14 (0.55)	32 (70.5)
40A□AL24	1/9	280 (11.0)	240 (9.45)	310 (12.2)	18 (0.71)	14 (0.55)	90 (3.54)	78 (3.07)	60 (2.36)	11 (0.43)	7 (0.28)	18 (0.71)	59 (130)
40A□AL54	1/20	280 (11.0)	240 (9.45)	310 (12.2)	18 (0.71)	14 (0.55)	90 (3.54)	78 (3.07)	60 (2.36)	11 (0.43)	7 (0.28)	18 (0.71)	59 (130)
40A□AL74	1/29	280 (11.0)	240 (9.45)	310 (12.2)	18 (0.71)	14 (0.55)	90 (3.54)	78 (3.07)	60 (2.36)	11 (0.43)	7 (0.28)	18 (0.71)	59 (130)
50A□AL14	1/5	280 (11.0)	240 (9.45)	310 (12.2)	18 (0.71)	14 (0.55)	90 (3.54)	78 (3.07)	60 (2.36)	11 (0.43)	7 (0.28)	18 (0.71)	52 (115)
50A□AL24	1/9	280 (11.0)	240 (9.45)	310 (12.2)	18 (0.71)	14 (0.55)	90 (3.54)	78 (3.07)	60 (2.36)	11 (0.43)	7 (0.28)	18 (0.71)	62 (137)
50A□AL54	1/20	280 (11.0)	240 (9.45)	310 (12.2)	18 (0.71)	14 (0.55)	90 (3.54)	78 (3.07)	60 (2.36)	11 (0.43)	7 (0.28)	18 (0.71)	62 (137)

INFO

■ Lubrication

- Since grease has been filled prior to shipment, the servomotors can be used without replenishing grease.

3.17 Dimensional Drawings of SGMDH Servomotors (2000min^{-1})

These Servomotors are not provided with gears.

3.17.1 SGMDH Servomotors (2000min^{-1}) Without Gears and With/Without Brakes

Models with oil seals are of the same configuration.

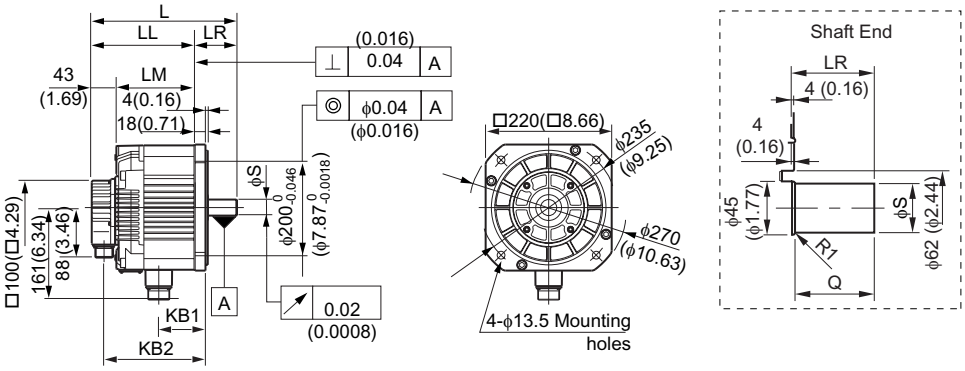

Note: For the specifications of the other shaft ends, refer to *3.19 Shaft End Specifications for SGMGH, SGMSH and SGMDH Servomotors*.

Units: mm (in)

Model SGMDH-	L	LL	LM	LR	KB1	KB2	Shaft-end Dimensions mm (in)		Approx. Mass kg (lb)		Allowable Radial Load N (lbf)	Allowable Thrust Load N (lbf)
							S	Q	Without Brakes	With Brakes		
22A□A21	242 (9.53)	187 (7.36)	144 (5.67)	55 (2.17)	70 (2.76)	165 (6.50)	$28^{0}_{-0.013}$ ($1.10^{0}_{-0.0005}$)	50 (1.97)	15.5 (34.2)	20.5 (45.2)	1176 (265)	490 (110)
32A□A21	254 (10.0)	199 (7.83)	156 (6.14)	55 (2.17)	82 (3.23)	177 (6.97)	$28^{0}_{-0.013}$ ($1.10^{0}_{-0.0005}$)	50 (1.97)	18.5 (40.8)	23.5 (51.8)	1176 (265)	490 (110)
40A□A21	274 (10.8)	209 (8.23)	166 (6.54)	65 (2.56)	92 (3.62)	187 (7.36)	$32^{0}_{-0.016}$ ($1.26^{0}_{-0.0006}$)	60 (2.36)	21 (46.3)	26 (57.3)	1176 (265)	490 (110)

* 1. The detector is a 17-bit encoder (absolute/incremental).

* 2. For Servomotors with brakes, □B is appended to the end of each model name.

- Cable Specifications for Detector Connectors (17-bit Encoder)

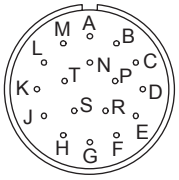

Receptacle: MS3102A20-29P
Applicable plug (Purchased by the customer)
Plug: MS3108B20-29S
Cale clamp: MS3057-12A

With an Absolute Encoder

A	–	K	–
B	–	L	–
C	DATA+	M	–
D	DATA-	N	–
E	–	P	–
F	–	R	–
G	0V	S	BATT-
H	+5VDC	T	BATT+
J	FG (Frame ground)	–	–

With an Incremental Encoder

A	–	K	–
B	–	L	–
C	DATA+	M	–
D	DATA-	N	–
E	–	P	–
F	–	R	–
G	0V	S	–
H	+5VDC	T	–
J	FG (Frame ground)	–	–

- Cable Specifications for Brake Connectors

Wihtout brakes

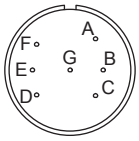

A	Phase U
B	Phase V
C	Phase W
D	FG(Frame ground)
E	–
F	–
G	–

With brakes

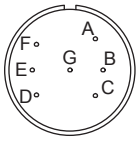

A	Phase U
B	Phase V
C	Phase W
D	FG (Frame ground)
E	Brake terminal
F	Brake terminal
G	–

3.18 Dimensional Drawings of SGMUH Servomotors (6000min^{-1})

These Servomotors are not provided with gears.

3.18.1 SGMUH Servomotors (6000min^{-1}) Without Gears and Without Brakes

Models with oil seals are of the same configuration.

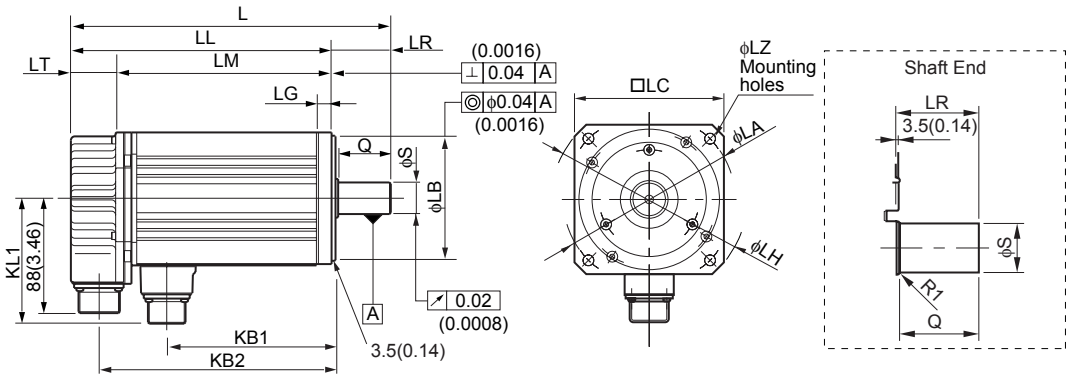

Units: mm

Model SGMUH-	L	LL	LM	LR	LT	KB1	KB2	KL1	Shaft-end Dimensions		Approx. Mass kg (lb)
									S	Q	
10DCA21	194 (7.64)	149 (5.87)	103 (4.06)	45 (1.77)	46 (1.81)	76 (2.99)	128 (5.04)	96 (3.78)	$24^{0}_{-0.013}$ $\left(0.94^{0}_{-0.0005}\right)$	40 (1.57)	4.8 (10.1)
15DCA21	220 (8.66)	175 (6.89)	129 (5.08)	45 (1.77)	46 (1.81)	102 (4.02)	154 (6.06)	96 (3.78)	$24^{0}_{-0.013}$ $\left(0.94^{0}_{-0.0005}\right)$	40 (1.57)	6.0 (13.2)
30DCA21	262 (10.3)	202 (7.95)	156 (6.14)	60 (2.36)	46 (1.81)	127 (5.00)	181 (7.13)	114 (4.49)	$28^{0}_{-0.013}$ $\left(1.10^{0}_{-0.0005}\right)$	55 (2.17)	11.5 (25.4)
40DCA21	327 (12.9)	267 (10.5)	196 (7.72)	60 (2.36)	71 (2.80)	164 (6.46)	245 (9.65)	114 (4.49)	$28^{0}_{-0.013}$ $\left(1.10^{0}_{-0.0005}\right)$	55 (2.17)	15.0 (33.9)

Model SGMUH-	Flange Face Dimensions mm (in)						Allowable Radial Load N (lbf)	Allowable Thrust Load N (lbf)
	LA	LB	LC	LG	LH	LZ		
10DCA21	130 (5.12)	$110^{+0.013}_{-0.009}$ $\left(4.33^{+0.0005}_{-0.0004}\right)$	116 (4.57)	10 (0.39)	150 (5.91)	9 (0.35)	490 (110)	98 (22)
15DCA21	130 (5.12)	$110^{+0.013}_{-0.009}$ $\left(4.33^{+0.0005}_{-0.0004}\right)$	116 (4.57)	10 (0.39)	150 (5.91)	9 (0.35)	490 (110)	98 (22)
30DCA21	165 (6.50)	$130^{+0.014}_{-0.011}$ $\left(5.12^{+0.0006}_{-0.0004}\right)$	155 (6.10)	12 (0.47)	190 (7.48)	11 (0.43)	686 (154)	196 (44)

Model SGMUH-	Flange Face Dimensions mm (in)						Allowable Radial Load N (lbf)	Allowable Thrust Load N (lbf)
	LA	LB	LC	LG	LH	LZ		
40DCA21	165 (6.50)	$130^{+0.014}_{-0.011}$ $\left(5.12^{+0.0006}_{-0.0004}\right)$	155 (6.10)	12 (0.47)	190 (7.48)	11 (0.43)	686 (154)	196 (44)

• Cable Specifications for Detector Connectors (17-bit Encoder)

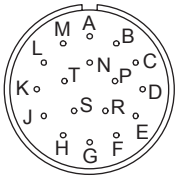

Receptacle: MS3102A20-29P
Applicable plug (Purchased by the customer)
Plug: MS3108B20-29S
Cale clamp: MS3057-12A

With an Incremental Encoder

A	–	K	–
B	–	L	–
C	DATA+	M	–
D	DATA-	N	–
E	–	P	–
F	–	R	–
G	0V	S	–
H	+5VDC	T	–
J	FG(Frame ground)	–	–

• Cable Specifications for Servomotor Connectors

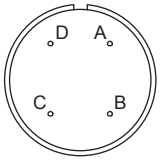

A	Phase U
B	Phase V
C	Phase W
D	FG (Frame ground)

3.18.2 SGMUH Servomotors (6000min^{-1}) Without Gears and With Brakes

Models with oil seals are of the same configuration.

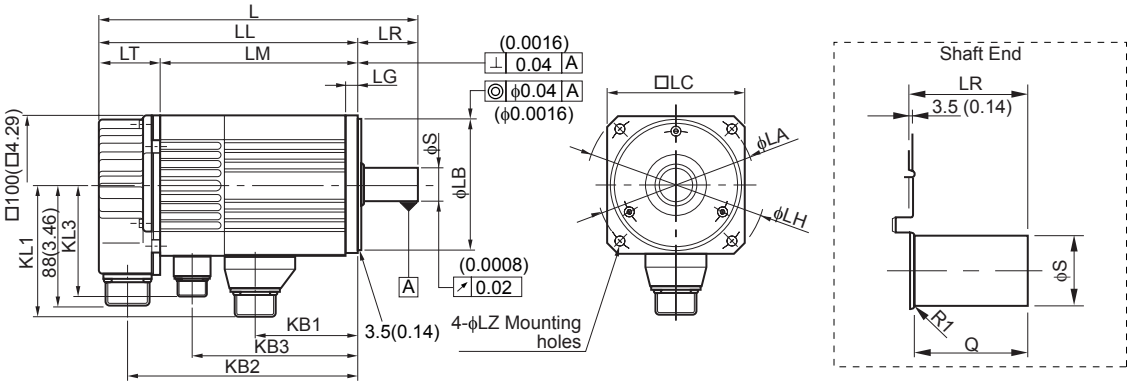

Units: mm (in)

Model SGMUH-	L	LL	LM	LR	LT	KB1	KB2	KB3	KL1	KL3	Shaft-end Dimensions		Approx. Mass kg (lb)
											S	Q	
10DCA2C	238 (9.37)	193 (7.60)	147 (5.79)	45 (1.77)	46 (1.81)	76 (2.99)	171 (6.73)	120 (4.72)	96 (3.78)	85 (3.35)	$24^{0}_{-0.013}$ $\left(0.94^{0}_{-0.0005}\right)$	40 (1.57)	6.2 (13.7)
15DCA2C	264 (10.4)	219 (8.62)	173 (6.81)	45 (1.77)	46 (1.81)	102 (4.02)	197 (7.76)	146 (5.75)	96 (3.78)	85 (3.35)	$24^{0}_{-0.013}$ $\left(0.94^{0}_{-0.0005}\right)$	40 (1.57)	7.7 (17.0)

Units: mm (in)

Model SGMUH-	L	LL	LM	LR	LT	KB1	KB2	KB3	KL1	KL3	Shaft-end Dimensions		Approx. Mass kg (lb)
											S	Q	
30DCA2C	300 (11.8)	240 (9.45)	194 (7.64)	60 (2.36)	46 (1.81)	127 (5.00)	219 (8.62)	173 (6.81)	114 (4.49)	98 (3.86)	$28^{0}_{-0.013}$ $\left(1.10^{0}_{-0.0005}\right)$	55 (2.17)	14.5 (32.0)
40DCA2C	362 (14.3)	302 (11.9)	231 (9.09)	60 (2.36)	71 (2.80)	164 (6.46)	281 (11.1)	210 (8.27)	114 (4.49)	98 (3.86)	$28^{0}_{-0.013}$ $\left(1.10^{0}_{-0.0005}\right)$	55 (2.17)	18.0 (39.7)

Model SGMUH-	Flange Face Dimensions mm (in)						Allowable Radial Load N (lbf)	Allowable Thrust Load N (lbf)
	LA	LB	LC	LG	LH	LZ		
10DCA2C	130 (5.12)	$110^{+0.013}_{-0.009}$ $\left(4.33^{+0.0005}_{-0.0004}\right)$	116 (4.57)	10 (0.39)	150 (5.91)	9 (0.35)	490 (110)	98 (22)
15DCA2C	130 (5.12)	$110^{+0.013}_{-0.009}$ $\left(4.33^{+0.0005}_{-0.0004}\right)$	116 (4.57)	10 (0.39)	150 (5.91)	9 (0.35)	490 (110)	98 (22)
30DCA2C	165 (6.50)	$130^{+0.014}_{-0.011}$ $\left(5.12^{+0.0006}_{-0.0004}\right)$	155 (6.10)	12 (0.47)	190 (7.48)	11 (0.43)	686 (154)	196 (44)
40DCA2C	165 (6.50)	$130^{+0.014}_{-0.011}$ $\left(5.12^{+0.0006}_{-0.0004}\right)$	155 (6.10)	12 (0.47)	190 (7.48)	11 (0.43)	686 (154)	196 (44)

3

- Cable Specifications for Detector Connectors (17-bit Encoder)

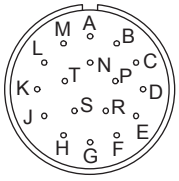

Receptacle: MS3102A20-29P
Applicable plug (Purchased by the customer)
Plug: MS3108B20-29S
Cale clamp: MS3057-12A

With an Incremental Encoder

A	–	K	–
B	–	L	–
C	DATA+	M	–
D	DATA-	N	–
E	–	P	–
F	–	R	–
G	0V	S	–
H	+5VDC	T	–
J	FG(Frame ground)	–	–

- Cable Specifications for Brake Connectors

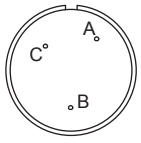

A	Brake terminal
B	Brake terminal
C	–

- Cable Specifications for Servomotor Connectors

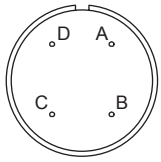

A	Phase U
B	Phase V
C	Phase W
D	FG (Frame ground)

3.19 Shaft End Specifications for SGMGH, SGMSH and SGMDH Servomotors

SGM□H - □□□□□□□□

Symbol	Specifications	Remarks
2	Straight, without key	Standard
3	Taper 1/10, with parallel key (Key slot is JISB1301-1976 high precision. SGMGH series is interchangeable with USAGED series.)	Semi-standard
5	Taper 1/10, woodruff key (Set only for SGMGH-05 and 09. Woodruff key is JISB1302.)	Semi-standard
6	Straight, with key and tap for one location (Key slot is JISB1301-1976 high precision.Key slot tolerance is JISB1301. Both key and tap are included.)	Semi-standard

Symbol	Specifications	Shaft End
2	Straight, without key	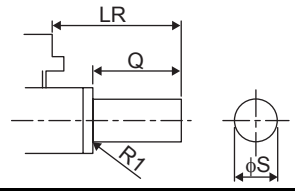
3	Taper 1/10 With parallel key	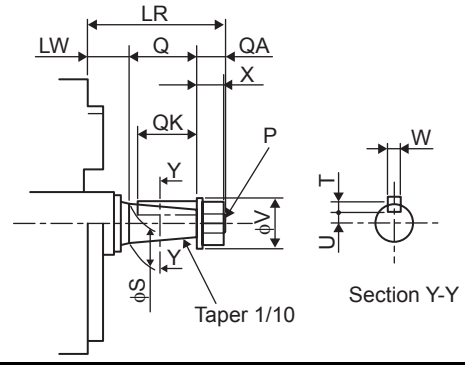
5	Taper 1/10, With woodruff key	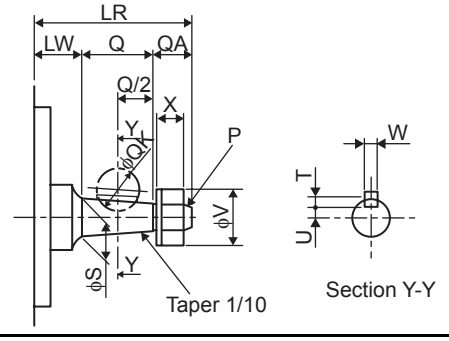

Symbol	Specifications	Shaft End
6	Straight, With key and tap	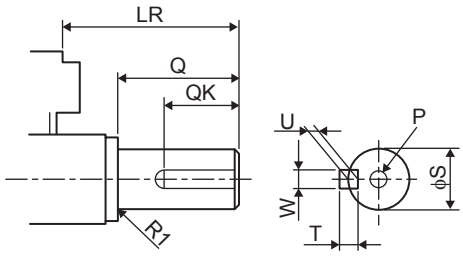

Units: mm (in)

Symbol	Specifications		Model																		
			SGMSH-						SGMGH-										SGMDH-		
			10	15	20	30	40	50	03B 05A	06B 09A	09B 13A	12B 20A	20B 30A	30B 44A	40B 55A	55B 75A	– 1AA	1E	22	32	40
2	Straight	LR	45 (1.77)			63 (2.48)			58 (2.28)			79 (3.11)			113 (4.45)		116 (4.57)		55 (2.17)		65 (2.56)
		Q	40 (1.57)			55 (2.17)			40 (1.57)			76 (2.99)			110 (4.33)				50 (1.97)		60 (2.36)
		S	$24^{0}_{-0.013}$ $\left(0.94^{0}_{-0.0005}\right)$			$28^{0}_{-0.013}$ $\left(1.10^{0}_{-0.0005}\right)$			$19^{0}_{-0.013}$ $\left(0.75^{0}_{-0.0005}\right)$		$22^{0}_{-0.013}$ $\left(0.87^{0}_{-0.0005}\right)$	$35^{+0.01}_{0}$ $\left(1.38^{+0.0004}_{0}\right)$			$42^{0}_{-0.016}$ $\left(1.65^{0}_{-0.0006}\right)$			$55^{+0.030}_{-0.011}$ $\left(2.17^{+0.0012}_{-0.0004}\right)$	$28^{0}_{-0.013}$ $\left(1.10^{0}_{-0.0005}\right)$		$32^{0}_{-0.016}$ $\left(1.26^{0}_{-0.0006}\right)$
3	Taper 1/10, parallel key	LR	70 (2.76)			80 (3.15)			58 (2.28)			102 (4.02)			132 (5.20)				–		–
		LW	20 (0.79)						18 (0.71)			22 (0.87)							–		–
		Q	36 (1.42)			42 (1.65)			28 (1.10)			58 (2.28)			82 (3.23)				–		–
		QA	14 (0.55)			18 (0.71)			12 (0.47)			22 (0.87)			28 (1.10)				–		–
		QK	32 (1.26)			36 (1.42)			25 (0.98)*1			50 (1.97)			70 (2.76)				–		–
		X	12.5 (0.49)			16 (0.63)			10.3 (0.41)			19.2 (0.76)			23 (0.91)		26 (1.02)		–		–
		S	24 (0.94)			28 (1.10)			16 (0.63)		19 (0.75)	32 (1.26)			42 (1.65)		55 (2.17)		–		–
		V	24 (0.94)			30 (1.18)			21 (0.83)			37 (1.46)			44 (1.73)		60 (2.36)		–		–
		P	M12, P1.25			M16, P1.5			M10, P1.25			M20, P1.5			M24, P2.0		M36, P3.0		–		–
		W	8 (0.31)						5 (0.20)			7 (0.28)			10 (0.39)		14 (0.55)		–		–
		T	7 (0.28)						5 (0.20)*2			7 (0.28)			8 (0.31)		9 (0.35)		–		–
		U	7.1 (0.28)			8.95 (0.35)			4.3 (0.17)*3		5.8 (0.23)	10.55 (0.42)			13.95 (0.55)		19.95 (0.79)		–		–
5	Taper 1/10, wood-ruff key	LR	–			–			58 (2.28)		–	–			–		–		–		–
		LW							18 (0.71)												
		Q							28 (1.10)												
		QA							12 (0.47)												
		QK							16 (0.63)												
		X							10.3 (0.41)												
		S							16 (0.63)												
		V							21 (0.83)												
		P							M10, P1.25												
		W							5 (0.20)												
		T							2 (0.08)												
		U							4.5 (0.18)												

3

Units: mm (in)

Symbol	Specifications		Model																	
			SGMSH-						SGMGH-									SGMDH-		
			10	15	20	30	40	50	03B 05A	06B 09A	09B 13A	12B 20A	20B 30A	30B 44A	40B 55A	55B 75A	– 1AA	1E	22	32	40
6	Straight, with key and tap	LR	45 (1.77)			63 (2.48)			58 (2.28)			79 (3.11)			113 (4.45)	116 (4.57)			55 (2.17)		65 (2.56)
		Q	40 (1.57)			55 (2.17)			40 (1.57)			76 (2.99)			110 (4.33)				50 (1.97)		60 (2.36)
		QK	32 (1.26)			50 (1.97)			25 (0.98)			60 (2.36)			90 (3.54)				45 (1.77)		50 (1.97)
		S	$24^{0}_{-0.013}$ $\left(0.94^{0}_{-0.0005}\right)$			$28^{0}_{-0.013}$ $\left(1.10^{0}_{-0.0005}\right)$			$19^{0}_{-0.013}$ $\left(0.75^{0}_{-0.0005}\right)$		$22^{0}_{-0.013}$ $\left(0.87^{0}_{-0.0005}\right)$	$35^{+0.01}_{0}$ $\left(1.38^{+0.0004}_{0}\right)$			$42^{0}_{-0.016}$ $\left(1.65^{0}_{-0.0006}\right)$			$55^{+0.030}_{+0.011}$ $\left(2.17^{+0.0012}_{+0.0004}\right)$	$28^{0}_{-0.013}$ $\left(1.10^{0}_{-0.0005}\right)$		$32^{0}_{-0.016}$ $\left(1.26^{0}_{-0.0006}\right)$
		W	8 (0.31)						5 (0.20)		6 (0.24)	10 (0.39)			12 (0.47)			16 (0.63)	8 (0.31)		10 (0.39)
		T	7 (0.28)						5 (0.20)		6 (0.24)	8 (0.31)						10 (0.39)	7 (0.28)		8 (0.31)
		U	4 (0.16)						3 (0.12)		3.5 (0.14)	5 (0.20)						6 (0.24)	4 (0.16)		5 (0.20)
		P	M8 screws, depth: 16						M5 screws, depth: 12			M12 screws, depth: 12			M16 screws, depth: 32			M20 screws, depth: 40	M8 screws, depth: 16		M12 screws, depth: 25

* 1. If the SGMGH-05A and 09A are not specified as the mounting interchangeable type, the value of the QK will be 16.

* 2. If the SGMGH-05A and 09A are not specified as the mounting interchangeable type, the value of the T will be 2.

* 3. If the SGMGH-05A and 09A are not specified as the mounting interchangeable type, the value of the U will be 4.5.

4

SERVOPACK Specifications and Dimensional Drawings

4.1 SERVOPACK Ratings and Specifications - - - - - - - - - - - - - - - 4-3
4.1.1 Single-phase 100 V - 4-3
4.1.2 Single-phase/Three-phase 200 V - 4-3
4.1.3 Single-phase 220 V (Option) - 4-4
4.1.4 Three-phase 400 V - 4-4
4.1.5 SERVOPACK Ratings and Specifications - 4-5

4.2 SERVOPACK Installation - 4-7

4.3 SERVOPACK Internal Block Diagrams - - - - - - - - - - - - - - - - - - 4-9
4.3.1 Single-phase 200 V, 30 W to 400 W,
and 100 V, 30 W to 200 W Models - 4-9
4.3.2 Three-phase 200 V, 500 W to 1.5 kW,
and Single-phase 220 V, 800 W, 1.5 kW Models - - - - - - - - - - - - - - - 4-10
4.3.3 Three-phase 200 V, 2.0 kW to 5.0 kW Models - - - - - - - - - - - - - - - - - 4-11
4.3.4 Three-phase 200 V, 6.0 kW to 15 kW Models - - - - - - - - - - - - - - - - - - 4-12
4.3.5 Three-phase 400 V, 500 W to 3.0 kW Models - - - - - - - - - - - - - - - - - - 4-13
4.3.6 Three-phase 400 V, 5.0 kW Model - 4-14
4.3.7 Three-phase 400 V, 6.0 kW, 7.5 kW Models - - - - - - - - - - - - - - - - - - 4-15
4.3.8 Three-phase 400 V, 11.0 kW, 15.0 kW Models - - - - - - - - - - - - - - - - - 4-16

4.4 SERVOPACK's Power Supply Capacities and Power Losses 4-17

4.5 SERVOPACK Overload Characteristics and Allowable Load
Moment of Inertia - 4-19
4.5.1 Overload Characteristics - 4-19
4.5.2 Starting and Stopping Time - 4-20
4.5.3 Load Moment of Inertia - 4-20

4.6 SERVOPACK Dimensional Drawings - - - - - - - - - - - - - - - - - - 4-23

4.7 Dimensional Drawings of Base-mounted SERVOPACK Model - 4-24
4.7.1 Single-phase 100 V: 30 W/50 W/100 W (A3BE/A5BE/01BE)
Single-phase 200 V: 30 W/50 W/100 W/200 W
(A3AE/A5AE/01AE/02AE) - 4-24
4.7.2 Single-phase 100 V: 200 W (02BE)
Single-phase 200 V: 400 W (04AE) - 4-25
4.7.3 Three-phase 200 V: 500 W/750 W/1.0 kW (05AE/08AE/10AE)
Single-phase 220 V: 750 W (08AE-S) - 4-26
4.7.4 Three-phase 200 V: 1.5 kW (15AE)
Three-phase 400 V: 500 W/750 W/1.0 kW/1.5 kW
(05DE/08DE/10DE/15DE) - 4-27
4.7.5 Single-phase 220 V: 1.5 kW (15AE-S)
Three-phase 200 V: 2.0 kW/3.0 kW (20AE/30AE)
Three-phase 400 V: 2.0 kW/3.0 kW (20DE/30DE) - 4-28
4.7.6 Three-phase 200 V: 5.0 kW (50AE)
Three-phase 400 V: 5.0 kW (50DE) - 4-29
4.7.7 Three-phase 200 V: 6.0 kW/7.5 kW (60AE/75AE) - 4-30
4.7.8 Three-phase 400 V: 6.0 kW/7.5 kW (60DE/75DE) - 4-31
4.7.9 Three-phase 200 V: 11.0 kW/15.0 kW (1AAE/1EAE) - 4-32
4.7.10 Three-phase 400 V: 11.0 kW/15.0 kW (1ADE/1EDE) - 4-33

4.8 Dimensional Drawings of Rack-mounted SERVOPACK Model - 4-34
4.8.1 Single-phase 100 V: 30 W/50 W/100 W (A3BE-R/A5BE-R/01BE-R)
Single-phase 200 V: 30 W/50 W/100 W/200 W
(A3AE-R/A5AE-R/01AE-R/ 02AE-R) - 4-34
4.8.2 Single-phase 100 V: 200 W (02BE-R)
Single-phase 200 V: 400 W (04AE-R) - 4-35
4.8.3 Single-phase 220 V: 750 W (08AE-S-R)
Three-phase 200 V: 500 W/750 W/1.0 kW
(05AE-R/08AE-R/10AE-R) - 4-36
4.8.4 Three-phase 200 V: 1.5 kW (15AE-R)
Three-phase 400 V: 500 W/750 W/1.0 kW/1.5 kW
(05DE-R/08DE-R/10DE-R/15DE-R) - 4-37
4.8.5 Single-phase 220 V: 1.5 kW (15AE-S-R) - 4-38
4.8.6 Three-phase 200 V: 2.0 kW/3.0 kW (20AE-R/30AE-R)
Three-phase 400 V: 2.0 kW/3.0 kW (20DE-R/30DE-R) - 4-39
4.8.7 Three-phase 200 V: 5.0 kW (50AE-R)
Three-phase 400 V: 5.0 kW (50DE-R) - 4-40

4.9 Dimensional Drawings of Duct-ventilated SERVOPACK Model - 4-41
4.9.1 Three-phase 200 V: 6.0 kW/7.5 kW (60AE-P/75AE-P) - 4-41
4.9.2 Three-phase 400 V: 6.0 kW/7.5 kW (60DE-P/75DE-P) - 4-42
4.9.3 Three-phase 200 V: 11.0 kW/15.0 kW (1AAE-P/1EAE-P) - 4-43
4.9.4 Three-phase 400 V: 11.0 kW/15.0 kW (1ADE-P/1EDE-P) - 4-44

4.1 SERVOPACK Ratings and Specifications

⚠ CAUTION

- Take appropriate measures to ensure that the input power supply is supplied within the specified voltage range.

  An incorrect input power supply may result in damage to the SERVOPACK. If the voltage exceeds these values, use a step-down transformer so that the voltage will be within the specified range.

4.1.1 Single-phase 100 V

The value of the input power supply voltage is maximum 127 Vrms.

SERVOPACK Model SGDH-		A3B	A5B	01B	02B
Max. Applicable Servomotor Capacity (kW)		0.03	0.05	0.1	0.2
Continuous Output Current (Arms)		0.66	0.95	2.4	3.0
Max. Output Current (Arms)		2.0	2.9	7.2	9.0
Input Power Supply	Main Circuit	Single-phase 100 to115 VAC +10 to -15%, 50/60 Hz			
	Control Circuit	Single-phase 100 to115 VAC +10 to -15%, 50/60 Hz			
Configuration		Base-mounted (Rack mounting available as an option)			
Regenerative Processing		External regenerative resistor			

4.1.2 Single-phase/Three-phase 200 V

The value of the input power supply voltage is maximum 253 Vrms.

SERVOPACK Model SGDH-		A3A	A5A	01A	02A	04A	05A	08A	10A	15A	20A	30A	50A	60A	75A	1AA	1EA
Max. Applicable Servomotor Capacity (kW)		0.03	0.05	0.1	0.2	0.4	0.45	0.75	1.0	1.5	2.0	3.0	5.0	6.0	7.5	11	15
Continuous Output Current (Arms)		0.44	0.64	0.91	2.1	2.8	3.8	5.7	7.6	11.6	18.5	24.8	32.9	46.9	54.7	58.6	78.0
Max. Output Current (Arms)		1.3	2.0	2.8	6.5	8.5	11.0	13.9	17	28	42	56	84	110	130	140	170
Input Power Supply	Main Circuit	Single-phase/Three-phase 200 to 230 VAC +10 to -15%, 50/60 Hz															
	Control Circuit	Single-phase 200 to 230 VAC +10 to -15%, 50/60 Hz															
Configuration		Base-mounted (Rack mounting available as an option)															Base-mounted (Duct-ventilated available as an option)
Regenerative Processing		External regenerative resistor						Built-in									External regenerative resistor

4.1.3 Single-phase 220 V (Option)

The value of the input power supply voltage is maximum 253 Vrms.

SERVOPACK Model SGDH-		08AE-S	15AE-S
Max. Applicable Servomotor Capacity (kW)		0.75	1.5
Continuous Output Current (Arms)		5.7	11.6
Max. Output Current (Arms)		13.9	28
Input Power Supply	Main Circuit	Single-phase/Three-phase 220 to 230 VAC +10 to -15%, 50/60 Hz*	
	Control Circuit	Single-phase 220 to 230 VAC +10 to -15%, 50/60 Hz	
Configuration		Base-mounted (Rack mounting available as an option)	
Regenerative Processing		Built-in	

* When a power supply of 187V (-15% of 220V) or less is used, alarm 41 which indicates voltage shortage, may occur when accelerating to maximum speed with maximum torque of servomotor.

4.1.4 Three-phase 400 V

The value of the input power supply voltage is maximum 528 Vrms.

SERVOPACK Model SGDH-		05D	10D	15D	20D	30D	50D	60D	75D	1AD	1ED
Max. Applicable Servomotor Capacity (kW)		0.45	1.0	1.5	2.0	3.0	5.0	6.0	7.5	11	15
Continuous Output Current (Arms)		1.9	3.5	5.4	8.4	11.9	16.5	20.8	25.4	28.1	37.2
Max. Output Current (Arms)		5.5	8.5	14	20	28	40.5	55	65	70	85
Input Power Supply	Main Circuit	Three-phase 380 to 480 VAC +10 to -15%, 50/60 Hz									
	Control Circuit	24 VDC ±15%									
Configuration		Base-mounted (Rack mounting available as an option)						Base-mounted (Duct-ventilated available as an option)			
Regenerative Processing		Built-in						External regenerative resistor			

4.1.5 SERVOPACK Ratings and Specifications

Basic Specifications	Control Method			Single or three-phase full-wave rectification IGBT-PWM (sine-wave driven)
	Feedback			Serial encoder: 13, 16 or 17-bit (incremental/absolute) * The 13-bit encoder is incremental only.
	Conditions	Ambient/Storage Temperature *1		0 to +55 °C (32 to 131 °F)/-20 to +85 °C (-4 to 185 °F)
		Ambient/Storage Humidity		90% RH or less (with no condensation)
		Vibration/Shock Resistance		4.9 m/s^2/19.6 m/s^2
Speed and Torque Control Modes	Performance	Speed Control Range		1:5000 (The lowest speed of the speed control range is the speed at which the servomotor will not stop with a rated torque load.)
		Speed Regulation *2	Load Regulation	0 to 100% load: ±0.01% or less (at rated speed)
			Voltage Regulation	Rated voltage ±10%: 0% (at rated speed)
			Temperature Regulation	25 ± 25 °C (77 °F): ±0.1% or less (at rated speed)
		Frequency Characteristics		400 Hz (at $J_L = J_M$)
		Torque Control Tolerance (Repeatability)		±2%
		Soft Start Time Setting		0 to 10 s (Can be set individually for acceleration and deceleration.)
	Input Signals	Speed Reference Input	Reference Voltage *3	±6 VDC (Variable setting range: ±2 to ±10 VDC) at rated torque (servomotor forward rotation with positive reference), input voltage: maximum ±12 V
			Input Impedance	About 14 kΩ
			Circuit Time Constant	About 47 µs
		Torque Reference Input	Reference Voltage *3	±3 VDC (Variable setting range: ±1 to ±10 VDC) at rated torque (positive torque reference with positive reference), input voltage: maximum ±12 V
			Input Impedance	About 14 kΩ
			Circuit Time Constant	About 47 µs
		Contact Speed Reference	Rotation Direction Selection	With P control signal
			Speed Selection	With forward/reverse current limit signal (speed 1 to 3 selection), servomotor stops or another control method is used when both are OFF.
Position Control Modes	Performance	Bias Setting		0 to 450 min^{-1} (setting resolution: 1 min^{-1})
		Feed Forward Compensation		0 to 100% (setting resolution: 1%)
		Positioning Completed Width Setting		0 to 250 reference units (setting resolution: 1 reference unit)
	Input Signals	Reference Pulse	Type	Sign + pulse train, 90° phase difference 2-phase pulse (phase A + phase B), or CCW + CW pulse train
			Form	Line driver (+5 V level), open collector (+5 V or +12 V level)
			Frequency	Maximum 500/200 kpps (line driver/open collector)
		Control Signal		Clear signal (input pulse form identical to reference pulse)
		Built-in Open Collector Power Supply *4		+12 V (1kΩ resistor built in)

I/O Signals	Position Output	Form	Phase-A, -B, -C line driver Phase-S line driver (only with an absolute encoder)
		Frequency Dividing Ratio	Any
	Sequence Input	Signal allocation can be modified.	Servo ON, P control (or Control mode switching, forward/reverse motor rotation by internal speed setting, zero clamping, reference pulse prohibited), forward run prohibited (P-OT), reverse run prohibited (N-OT), alarm reset, forward current limit, and reverse current limit (or internal speed selection)
	Sequence Output	Fixed Output	Servo alarm, 3-bit alarm codes
		Signal allocation can be modified.	Positioning completed (speed coincidence), during servomotor rotation, servo ready, during current limiting, during speed limiting, brake released, warning, selecting three of the NEAR signals.
Internal Functions	Dynamic Brake		Operated at main power OFF, servo alarm, servo OFF or overtravel.
	Overtravel Stop		Dynamic brake stop at P-OT or N-OT, deceleration to a stop, or coast to a stop
	Electronic Gear		$0.01 \leq B/A \leq 100$
	Protection		Overcurrent, overvoltage, low voltage, overload, regeneration error, main circuit detection section error, heat sink overheated, no power supply, overflow, overspeed, encoder error, overrun, CPU error, parameter error.
	LED Display		Charge, Power, five 7-segment LEDs (built-in Digital Operator functions)
	CN5 Analog Monitoring		Analog monitor connector built in for monitoring speed, torque and other reference signals. Speed: 1 V/1000 min^{-1} Torque: 1 V/100% of rated torque Position error pulses: 0.05 V/1 reference units or 0.05 V/100 reference units
	Communications	Connected Devices	Digital Operator (hand-held model), RS-422A port such as for a personal computer (RS-232C ports under certain conditions)
		1:N Communications	Up to N = 14 for RS-422A ports
		Axis Address Setting	Set with parameters.
		Functions	Status display, parameter setting, monitor display, alarm trace-back display, JOG and autotuning operations, speed, torque reference signal and other drawing functions.
	Others		Reverse rotation connection, zero-point search, automatic servomotor ID, DC reactor connection terminal for harmonic suppressions. *5

* 1. Use the SERVOPACK within the ambient temperature range. When enclosed in a control panel, internal temperatures must not exceed the ambient temperature range.
* 2. Speed regulation is defined as follows:

$$\text{Speed reguration} = \frac{\text{No-load motor speed} - \text{Total load motor speed}}{\text{Rated motor speed}} \times 100\%$$

The motor speed may change due to voltage variations or amplifier drift and changes in processing resistance due to temperature variation. The ratio of speed changes to the rated speed represent speed regulation due to voltage and temperature variations.

* 3. Forward is clockwise viewed from the non-load side of the servomotor. (Counterclockwise viewed from the load and shaft end)
* 4. The built-in open collector power supply is not electrically insulated from the control circuit in the SERVOPACK.
* 5. The DC reactor connection terminals for power supplies designed for minimum harmonics are not included in SERVOPACKs with capacities of 6 kW or more.

4.2 SERVOPACK Installation

The SGDH SERVOPACKs can be mounted on a base, rack or duct-ventilated. Incorrect installation will cause problems. Always observe the following installation instructions.

⚠ WARNING

- After voltage resistance test, wait at least five minutes before servicing the product. (Refer to “Voltage Resistance Test” on the following page.)
  Failure to observe this warning may result in electric shock.
- Connect the main circuit wires, control wires, and main circuit cables of the motor correctly.
  Incorrect wiring will result in failure of the SERVOPACK.

Storage	Store the SERVOPACK within the following temperature range if it is stored with the power cable disconnected. Temperature: -20 to 85 °C (-4 to 185 °F) Humidity: 90%RH or less (with no condensation)
Operating Conditions	• Installation category (Overvoltage category) *: III • Pollution degree *: 2 • Protection class *: 1X • Altitude: Maximum 1000 m
Installation Site	Installation in a Control Panel Design the control panel size, unit layout, and cooling method so the temperature around the SERVOPACK does not exceed 55 °C (131 °F). Installation Near a Heating Unit Minimize the heat radiating from the heating unit as well as any temperature rise caused by natural convection so the temperature around the SERVOPACK does not exceed 55 °C (131 °F). Installation Near a Source of Vibration Install a vibration isolator on the SERVOPACK to avoid subjecting it to vibration. Installation at a Site Exposed to Corrosive Gas Corrosive gas does not have an immediate effect on the SERVOPACK but will eventually cause the electronic components and contactor-related devices to malfunction. Take appropriate action to avoid corrosive gas. Other Situations Do not install the SERVOPACK in hot, humid locations or locations subject to excessive dust or iron powder in the air.

* Conforming to the following standards.
- UL508C
- CSA C22.2 No.14
- EN50178
- EN55011 group 1 class A
- EN61000-6-2

Orientation	Install the SERVOPACK perpendicular to the wall as shown in the figure. The SERVOPACK must be oriented this way because it is designed to be cooled by natural convection or a cooling fan. Secure the SERVOPACK using two to four mounting holes. The number of holes depends on the capacity. 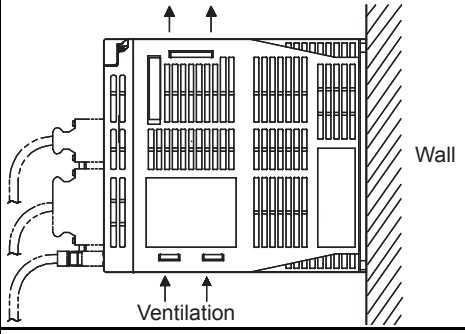
Installation	Follow the procedure below to install multiple SERVOPACKs side by side in a control panel. 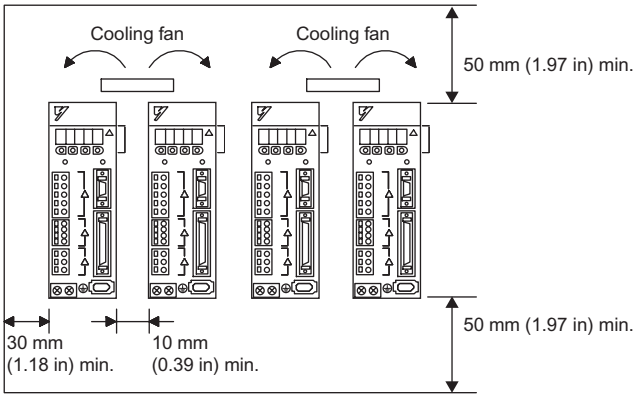 **SERVOPACK Orientation** Install the SERVOPACK perpendicular to the wall so the front panel containing connectors faces outward. **Cooling** As shown in the figure above, allow sufficient space around each SERVOPACK for cooling by cooling fans or natural convection. **Side-by-side Installation** When installing SERVOPACKs side by side as shown in the figure above, allow at least 10 mm (0.39 in) between and at least 50 mm (1.97 in) above and below each SERVOPACK. Install cooling fans above the SERVOPACKs to avoid excessive temperature rise and to maintain even temperature inside the control panel. **Environmental Conditions in the Control Panel** Ambient Temperature:0 to 55°C (32 to 131° F) Humidity: 90% RH or less Vibration: 4.9 m/s^2 Condensation and Freezing: None Ambient Temperature for Long-term Reliability: 45 °C (113 °F) or less
Voltage Resistance Test	Conduct voltage resistance tests under the following conditions. • Voltage: 1500 Vrms AC for one minute • Braking current: 30 mA or more • Frequency: 50 or 60 Hz • Voltage applied points For SGDH-□□AE SERVOPACKs: Between the ground terminals and the point where the terminals L1, L2, (L3), L1C, L2C, U, V, W are connected. For SGDH-□□BE SERVOPACKs: Between the ground terminals and the point where the terminals L1, L2, (L3), L1C, L2C, U, V, W are connected. For SGDH-□□DE SERVOPACKs: Between the neutral terminals and the point where the terminals L1, L2, L3, U, V, W are connected.

4.3 SERVOPACK Internal Block Diagrams

4.3.1 Single-phase 200 V, 30 W to 400 W, and 100 V, 30 W to 200 W Models

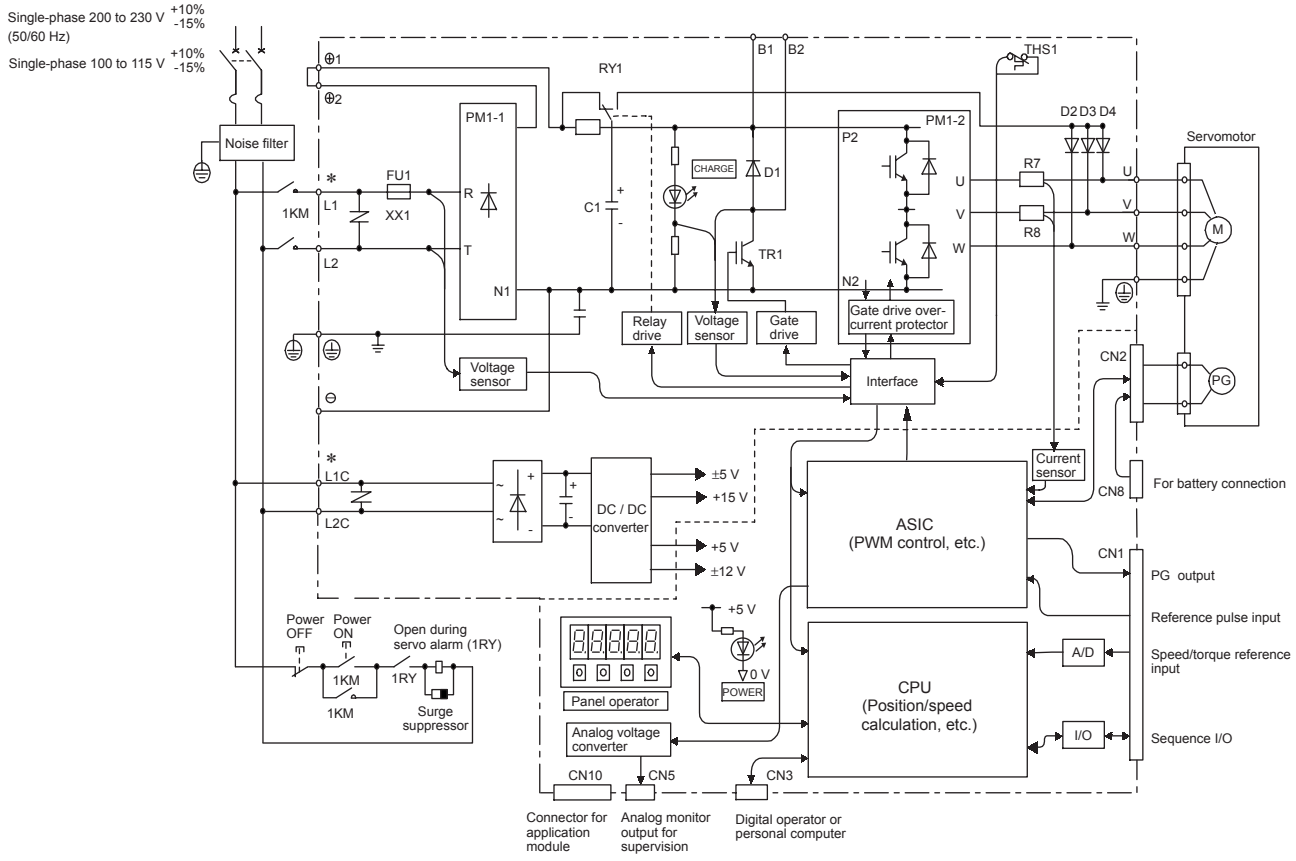

∗ The supply voltage for 100V, 30 to 200W is 100 to 115V $^{+10\%}_{-15\%}$ (50/60 Hz).

4.3.2 Three-phase 200 V, 500 W to 1.5 kW, and Single-phase 220 V, 800 W, 1.5 kW Models

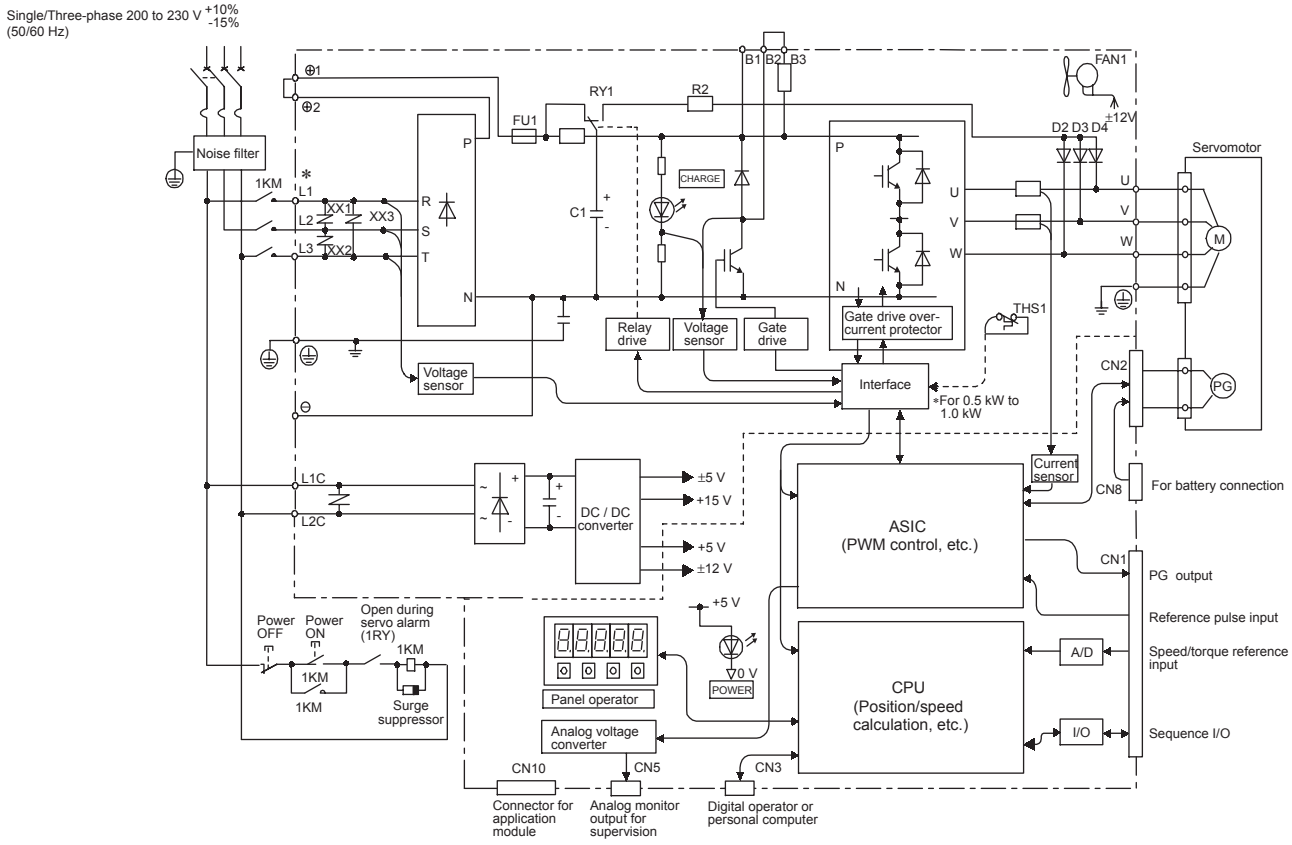

*When using the single-phase 220 V, 800 W, 1.5 kW models, wiring on L2 is unnecessary.

4.3.3 Three-phase 200 V, 2.0 kW to 5.0 kW Models

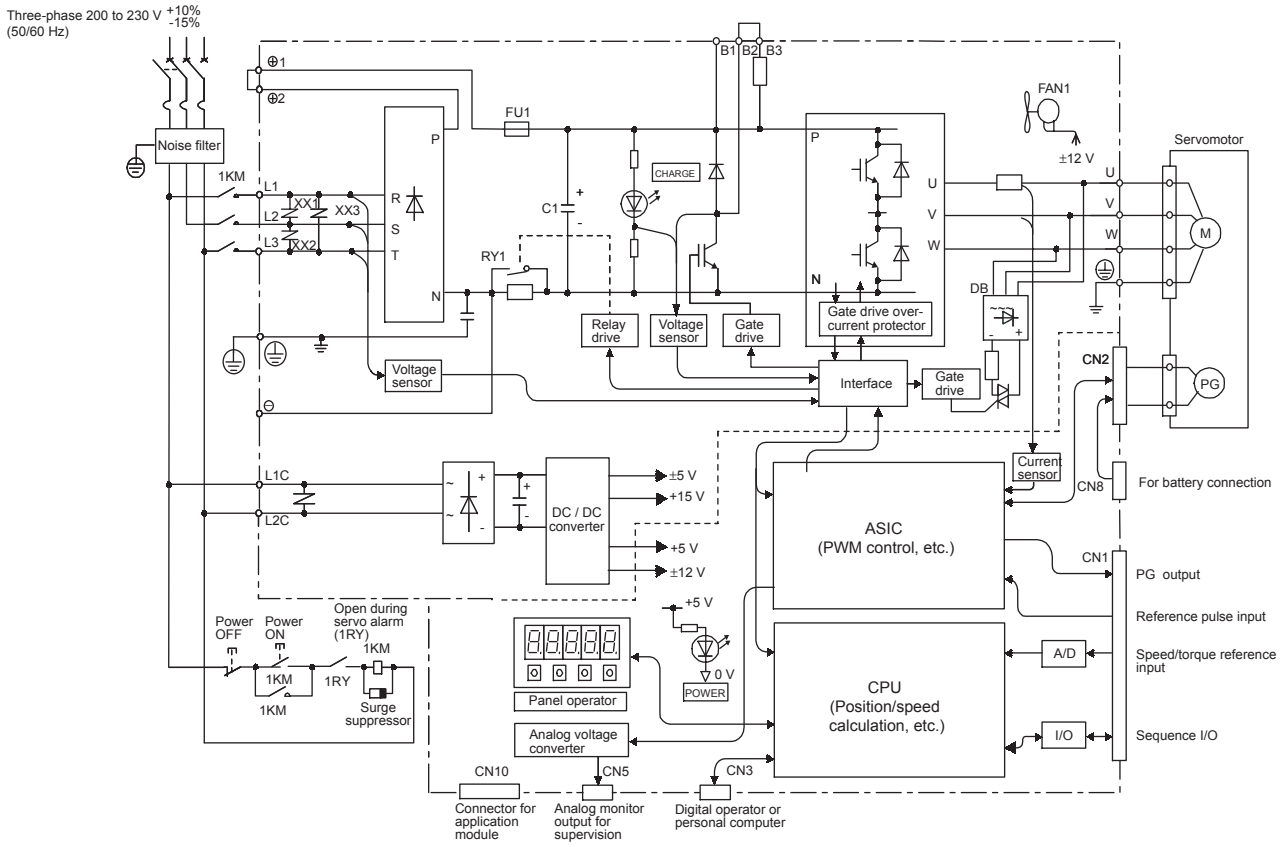

4

4.3.4 Three-phase 200 V, 6.0 kW to 15 kW Models

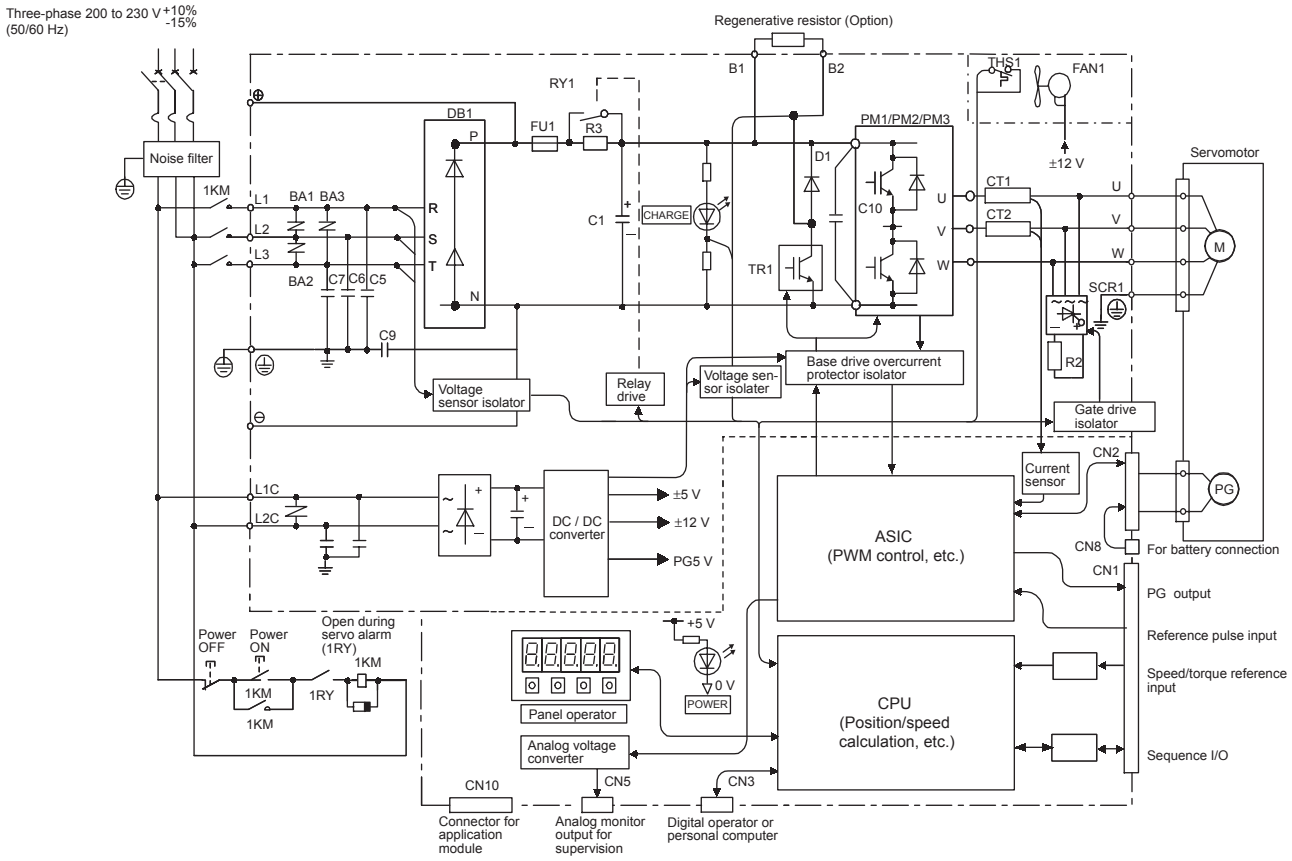

4.3.5 Three-phase 400 V, 500 W to 3.0 kW Models

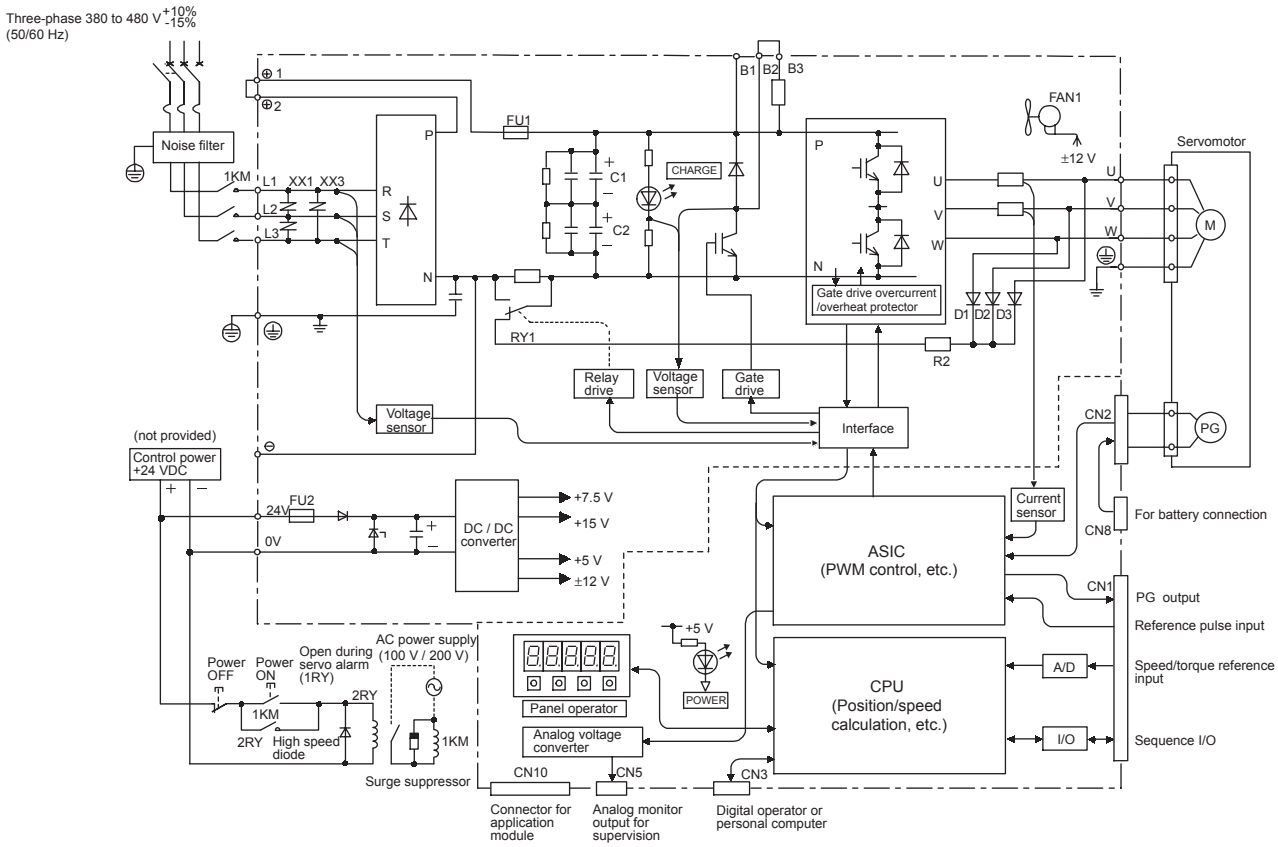

4

4.3.6 Three-phase 400 V, 5.0 kW Model

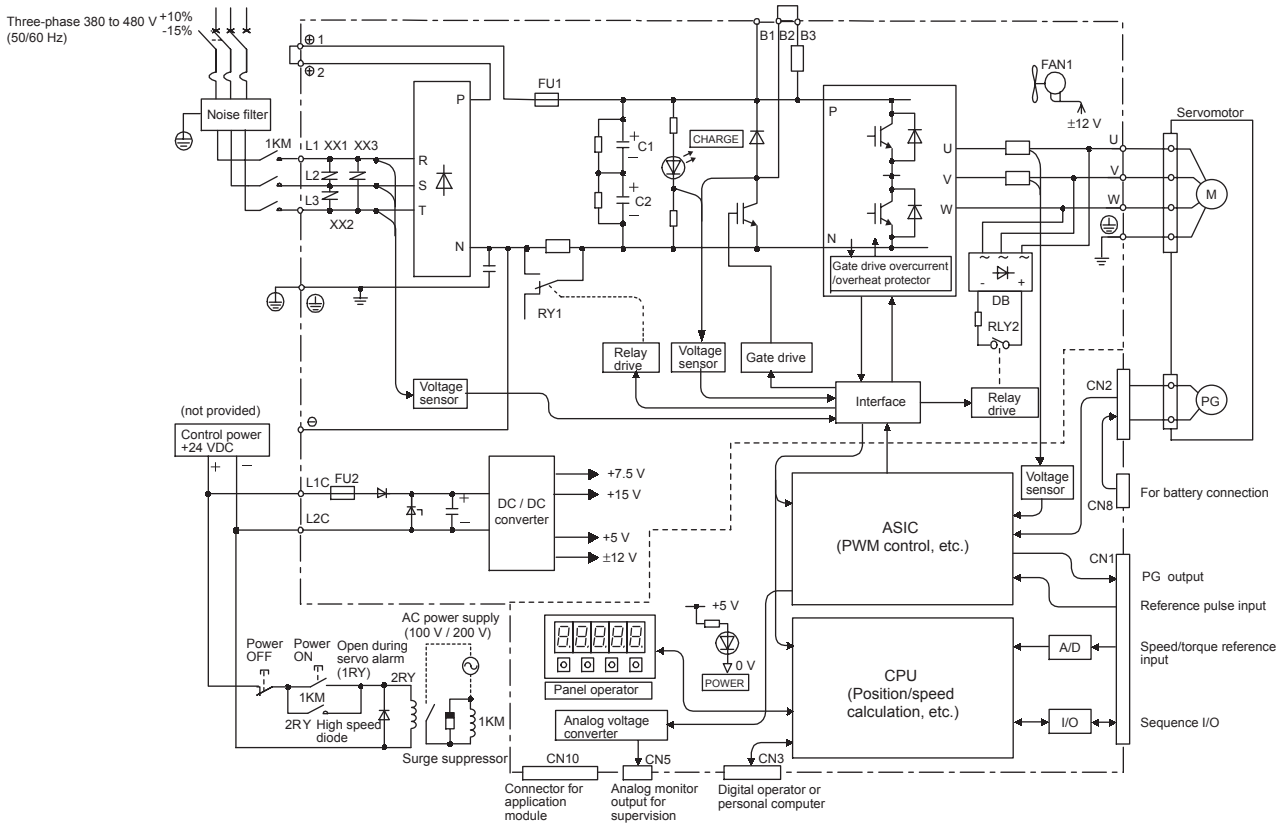

4.3.7 Three-phase 400 V, 6.0 kW, 7.5 kW Models

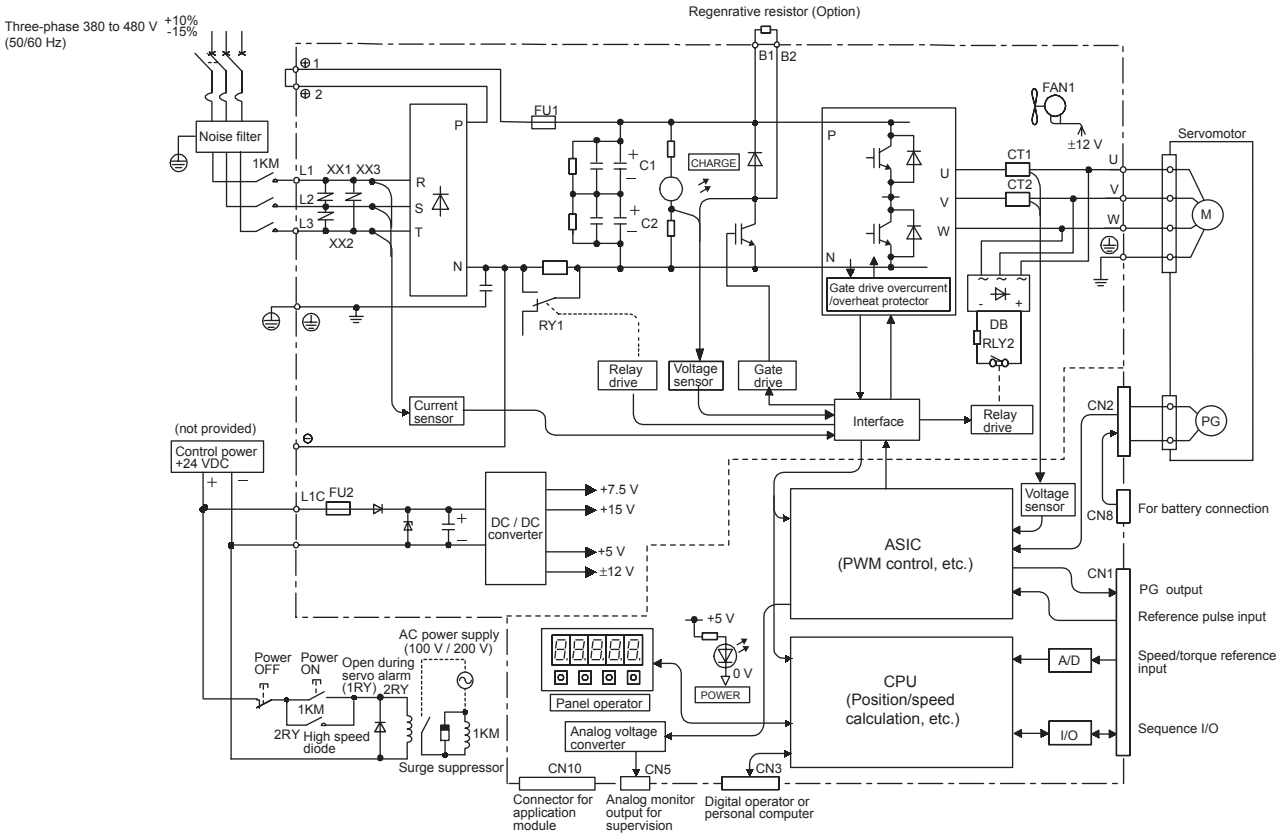

4.3.8 Three-phase 400 V, 11.0 kW, 15.0 kW Models

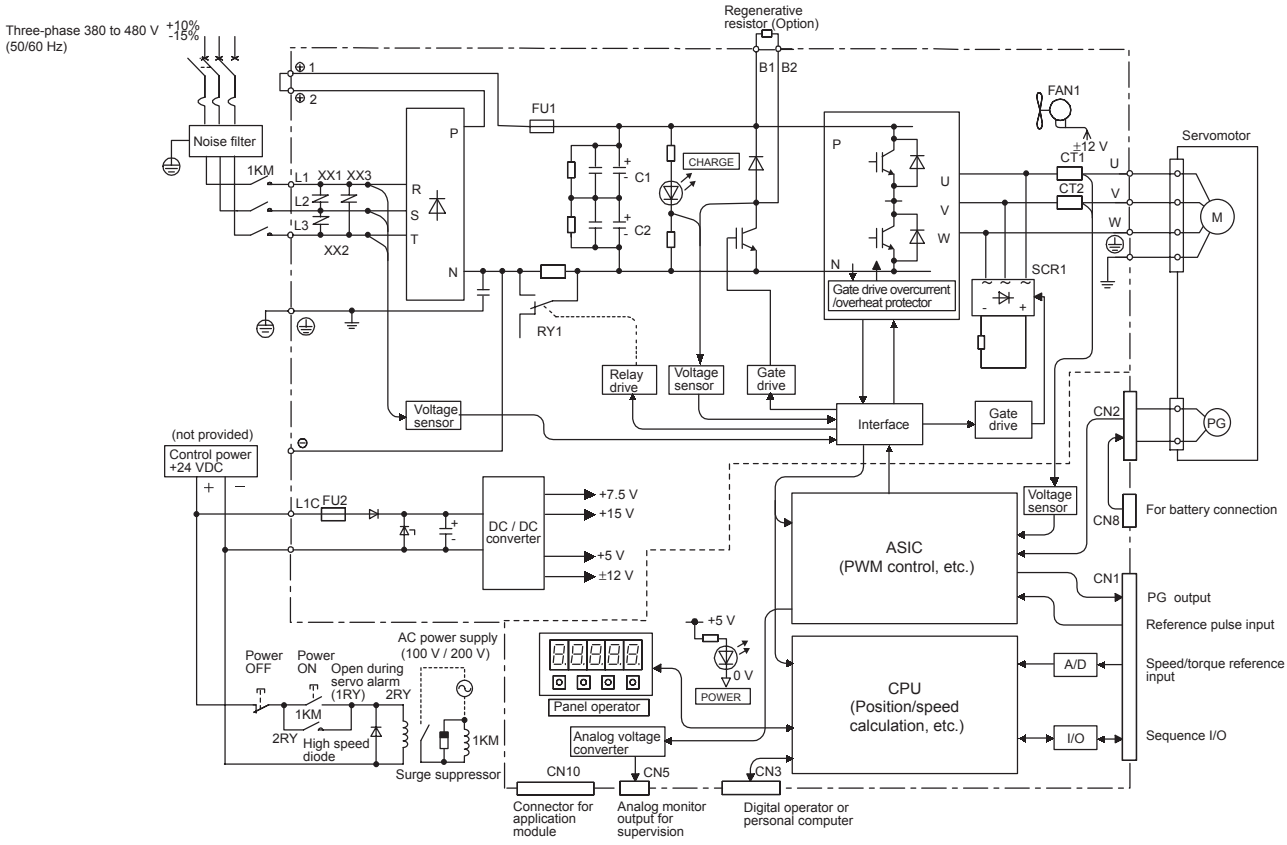

4.4 SERVOPACK's Power Supply Capacities and Power Losses

The following table shows SERVOPACK's power supply capacities and power losses at the rated output.

Table 4.1 SERVOPACK Power Losses at Rated Output

Main Circuit Power Supply	Maximum Applicable Servomotor Capacity kW	SERVOPACK Model SGDH-	Output Current (Effective Value) A	Main Circuit Power Loss W	Regenerative Resistor Power Loss W	Control Circuit Power Loss W	Total Power Loss W
Single-phase 100 V	0.03	A3BE	0.66	3.5	_*1	13	16.5
	0.05	A5BE	0.95	5.2			18.2
	0.10	01BE	2.4	12			25
	0.20	02BE	3.0	16.4			29.4
Single-phase 200 V	0.03	A3AE	0.44	3.1	_ *1	13	16.1
	0.05	A5AE	0.64	4.6			17.6
	0.10	01AE	0.91	6.7			19.7
	0.20	02AE	2.1	13.3			26.3
	0.40	04AE	2.8	20			33
Single-phase 220 V	0.75	08AE-S	4.4	47	12 *2	15	74
	1.50	15AE-S	7.5	60	14 *2		89
Three-phase 200 V	0.45	05AE	3.8	27	12 *2	15	54
	0.75	08AE	5.7	41			68
	1.0	10AE	7.6	55			82
	1.5	15AE	11.6	92	14 *2		121
	2.0	20AE	18.5	120	28 *2		163
	3.0	30AE	24.8	155			198
	5.0	50AE	32.9	240	56 *2		311
	6.0	60AE	46.9	290	_ *3	27	317
	7.5	75AE	54.7	330			357
	11	1AAE	58.6	360		30	390
	15	1EAE	78.0	490			520
Three-phase 400 V	0.45	05DE	1.9	19	14 *2	15	48
	1.0	10DE	3.5	35			64
	1.5	15DE	5.4	53			82
	2.0	20DE	8.4	83	28 *2		126
	3.0	30DE	11.9	118			161
	5.0	50DE	16.5	192	36		243
	6.0	60DE	20.8	232	_ *3		247
	7.5	75DE	25.4	264			279
	11	1ADE	28.1	288			303
	15	1EDE	37.2	392			407

* 1. SERVOPACKs with a capacity of 30 to 400W do not have built-in regenerative resistors. If the regenerative energy exceeds the specified value, connect an external regenerative resistor. Refer to *11.1.3 Calculating the Required Capacity of Regenerative Resistors.*

* 2. Regenerative resistor power losses are allowable losses. Take the following action if this value is exceeded.

- Remove the lead from the internal regenerative resistor in the SERVOPACK.
- Install an external regenerative resistor (optional).

* 3. An external regenerative resistor must be connected to SERVOPACKs with a capacity of 6.0 kW or higher. The following regenerative resistor units are provided for this purpose.
For the SGDH-60AE: JUSP-RA04 (allowable loss: 180W)
For the SGDH-60DE and 75DE: JUSP-RA18 (allowable loss: 180W)
For the SGDH-75AE to 1EAE: JUSP-RA05 (allowable loss: 350W)
For the SGDH-1ADE and 1EDE: JUSP-RA19 (allowable loss: 350W)

Note: Refer to *6.5 Connecting Regenerative Resistors*, *5.8.6 External Regenerative Resistor* and *5.8.7 Regenerative Resistor Unit* for details.

4.5 SERVOPACK Overload Characteristics and Allowable Load Moment of Inertia

4.5.1 Overload Characteristics

SERVOPACKs have a built-in overload protective function that protects the SERVOPACKs and servomotors from overload. Allowable power for the SERVOPACKs is limited by the overload protective function as shown in the figure below.

The overload detection level is set under hot start[1] conditions at a servomotor ambient temperature of 40°C (104°F).

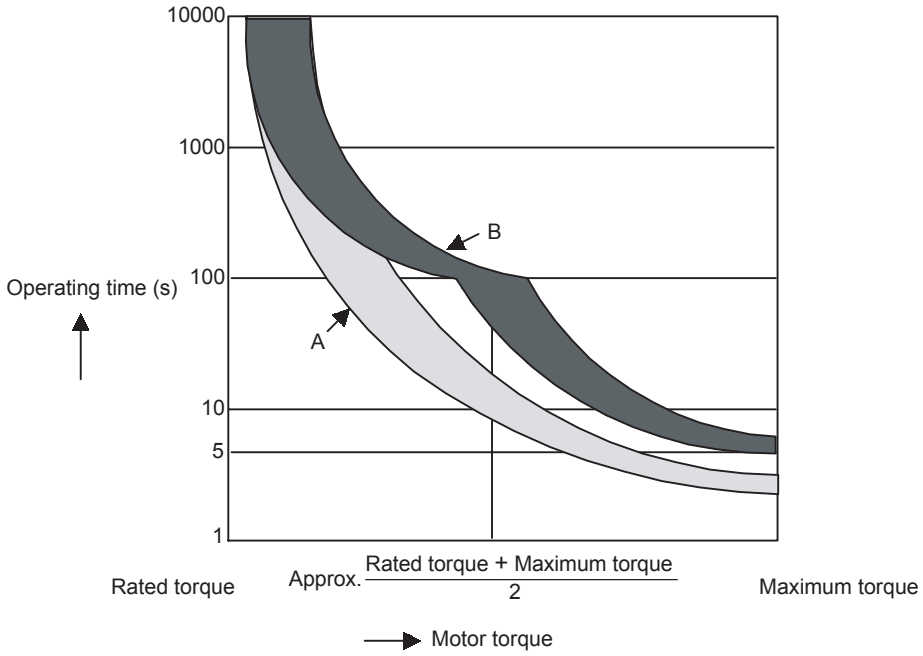

Note: The overload protection characteristics of A and B in the figure are applicable when the SERVOPACK is combined with one of the following servomotors.
A: SGMAH or SGMPH servomotor with a capacity of maximum 400 W.
B: SGMAH or SGMPH servomotors with a capacity more than 400 W and SGMGH, SGMSH, SGMDH, and SGMUH servomotors.

TERMS

[1] Hot Start

A hot start indicates that both the SERVOPACK and the servomotor have run long enough at the rated load to be thermally saturated.

4.5.2 Starting and Stopping Time

The motor starting time (tr) and stopping time (tf) under a constant load are calculated using the following formulas. Motor viscous torque and friction torque are ignored.

Starting time: $$tr = \frac{2\pi \cdot N_M (J_M + J_L)}{60 \cdot (T_{PM} \cdot T_L)} [s]$$

Stopping time: $$tf = \frac{2\pi \cdot N_M (J_M + J_L)}{60 \cdot (T_{PM} \cdot T_L)} [s]$$

N_M: Motor speed (min^{-1})

J_M: Motor rotor moment of inertia ($kg \cdot m^2$)

J_L: Load converted to shaft moment of inertia ($kg \cdot m^2$)

T_{PM}: Instantaneous peak motor torque when combined with a SERVOPACK (N·m)

T_L: Load torque (N·m)

Calculate the torque from the motor current using servomotor torque constant × motor current (effective value).

The following figure shows the motor torque and motor speed timing chart.

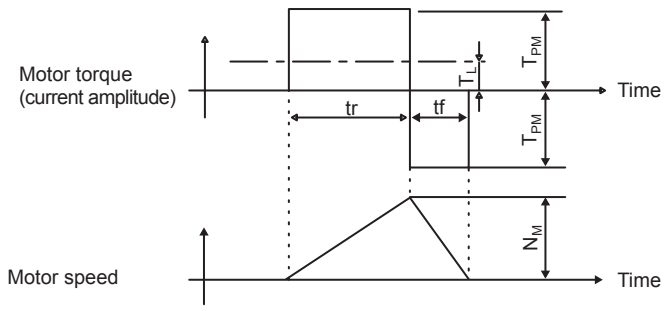

4.5.3 Load Moment of Inertia

The larger the load moment of inertia, the worse the movement response of the load.

The size of the load moment of inertia (J_L) allowable when using a servomotor depends on motor capacity and is limited to within 5 to 30 times the moment of inertia of each servomotor (J_M). This value is provided strictly as a guideline and results may vary depending on servomotor drive conditions.

An overvoltage alarm is likely to occur during deceleration if the load moment of inertia exceeds the allowable load moment of inertia. SERVOPACKs with a built-in regenerative resistor may generate a regeneration overload alarm. Take one of the following steps if this occurs.

- Reduce the torque limit.
- Reduce the deceleration rate.
- Reduce the maximum motor speed.
- Install an externally mounted regenerative resistor if the alarm cannot be cleared. Contact your Yaskawa Application Engineering Department.

Regenerative resistors are not built into 200 V SERVOPACKs for 30 W to 400 W or 100 V SERVOPACKs for 30 W to 200 W. The following figures show the tentative relationship between the load moment of inertia and motor speed using an example with a load moment of inertia 10 to 30 times the rotor moment of inertia at the motor shaft.

External regenerative resistors are required when this condition is exceeded or if the allowable loss capacity (W) of the built-in regenerative resistor is exceeded due to regenerative drive conditions when a regenerative resistor is already built in.

(1) Allowable Load Moment of Inertia and Motor Speed for SGMAH 200 V Servomotors

The following relationships between the motor speed and load moment of inertia are for an AC input power voltage of 200 Vrms. The relationship will change according to changes in power voltage.

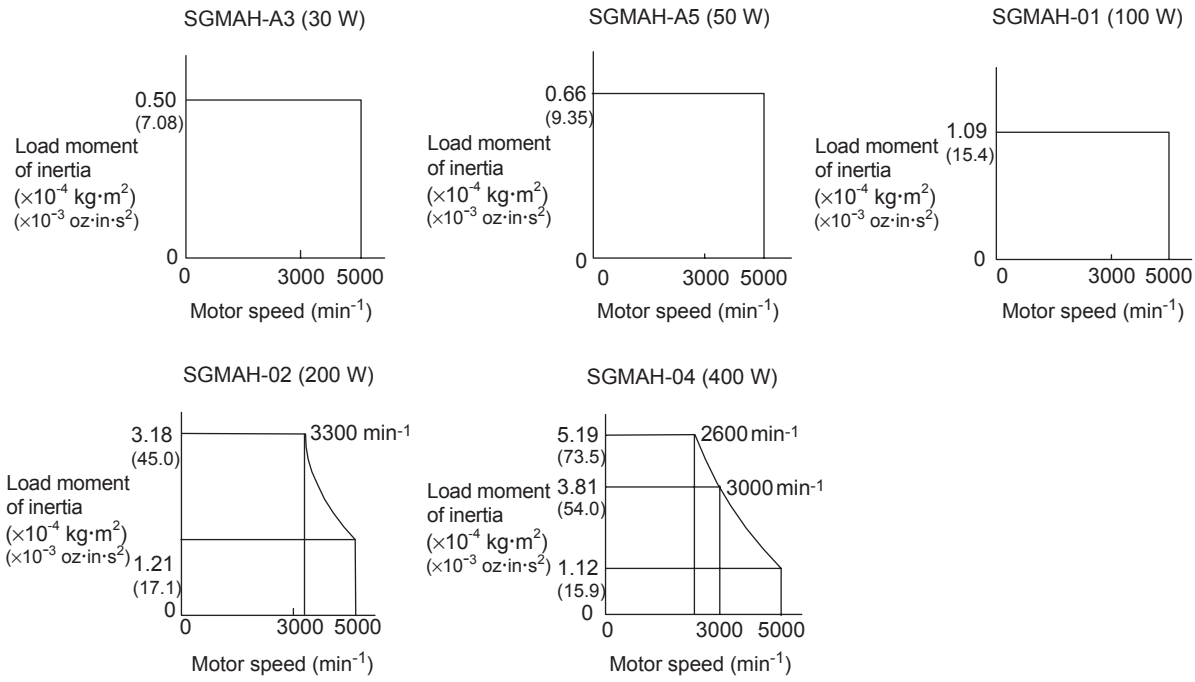

(2) Allowable Load Moment of Inertia and Motor Speed for SGMPH 200 V Servomotors

The following relationships between the motor speed and load moment of inertia are for an AC input power voltage of 200 Vrms. The relationship will change according to changes in power voltage.

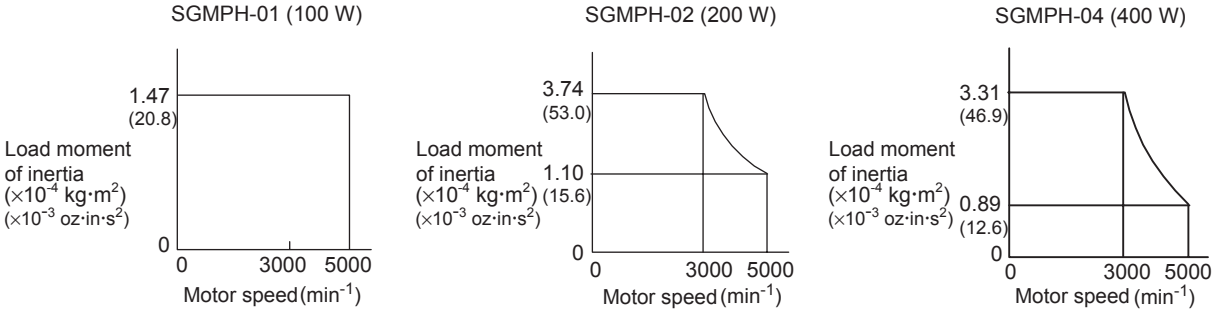

(3) Allowable Load Moment of Inertia at the Motor Shaft

The rotor moment of inertia ratio is the value for a servomotor without a gear and a brake.

Servomotor Model		Capacity Range	Allowable Load Moment of Inertia (Rotor Moment of Inertia Ratio)
SGMAH	200 V	30 W to 200 W	× 30
		400 W, 750 W	× 20
	400 V	300 W, 650 W	× 20

Servomotor Model	Capacity Range	Allowable Load Moment of Inertia (Rotor Moment of Inertia Ratio)
SGMPH	100 W	×25
	200 W	×15
	400 W	×7
	750 W, 1.5 kW	×5
SGMGH (1500 min^{-1})	450 W to 15 kW	×5
SGMGH (1000 min^{-1})	300 W to 5.5 kW	×5
SGMSH	1.0 kW to 5.0 kW	×5
SGMDH	2.2 kW to 4.0 kW	×5
SGMUH	1.0 kW to 4.0 kW	×5

(4) Overhanging Loads

A servomotor may not be operated with an overhanging load, which tends to continuously rotate the motor. *Fig. 4.1* shows a typical example of such a load.

- DO NOT use the servomotor with the Vertical Axis Motor Drive without Counterweight

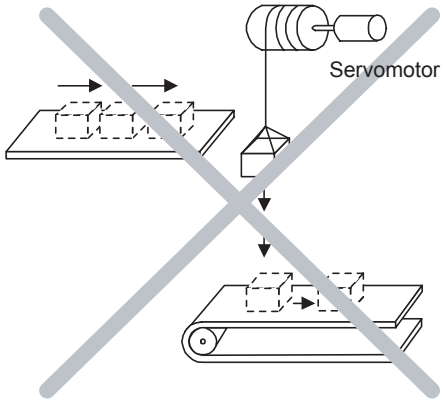

- DO NOT use the servomotor with the Feeding Motor Drive

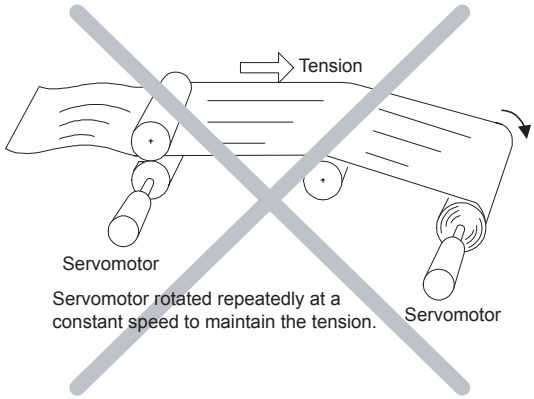

Fig. 4.1 Examples of Overhanging Loads

IMPORTANT

- Never operate servomotors with an overhanging load. Doing so will cause the SERVOPACKs' regenerative brake to be applied continuously and the regenerative energy of the load may exceed the allowable range causing damage to the SERVOPACK.
- The regenerative brake capacity of the SGDH SERVOPACKs is rated for short-term operation approximately equivalent to the time it takes to decelerate to a stop.

4.6 SERVOPACK Dimensional Drawings

SERVOPACK dimensional drawings are grouped according to the mounting method and the capacity.

(1) Base-mounted Type

Supply Voltage		SERVOPACK		Reference
		Capacity	Model SGDH-□□□E	
Single-phase	100 V	30 W / 50 W / 100 W	A3B / A5B / 01B	4.7.1
	200 V	30 W / 50 W / 100 W / 200 W	A3A / A5A / 01A / 02A	
	100 V	200 W	02B	4.7.2
	200 V	400 W	04A	
Three-phase	200 V	500 W / 800 W / 1.0 kW	05A / 08A / 10A	4.7.3
Single-phase	220 V	750 W	08AE-S	
	220 V	1.5 kW	15AE-S	4.7.5
Three-phase	200 V	1.5 kW	15A	4.7.4
	400 V	500 W / 750 W / 1.0 kW / 1.5 kW	05D / 08D / 10D / 15D	
	200 V	2.0 kW / 3.0 kW	20A / 30A	4.7.5
	400 V	2.0 kW / 3.0 kW	20D / 30D	
	200 V	5.0 kW	50A	4.7.6
	400 V	5.0 kW	50D	
	200 V	6.0 kW / 7.5 kW	60A / 75A	4.7.7
	400 V	6.0 kW / 7.5 kW	60D / 75D	4.7.8
	200 V	11.0 kW / 15.0 kW	1AA / 1EA	4.7.9
	400 V	11.0kW / 15.0 kW	1AD / 1ED	4.7.10

(2) Rack-mounted Type

Supply Voltage		SERVOPACK		Reference
		Capacity	Model SGDH-□□□E-R	
Single-phase	100 V	30 W / 50 W / 100 W	A3B / A5B / 01B	4.8.1
	200 V	30 W / 50 W / 100 W / 200 W	A3A / A5A / 01A / 02A	
	100 V	200 W	02B	4.8.2
	200 V	400 W	04A	
	220 V	800 W	08AE-S-R	4.8.3
	220 V	1.5 kW	15AE-S-R	4.8.5
Three-phase	200 V	500 W / 800 W / 1.0 kW	05A / 08A / 10A	4.8.3
	200 V	1.5 kW	15A	4.8.4
	400 V	500 W / 800 W / 1.0 kW / 1.5 kW	05D / 08D / 10D / 15D	
	200 V	2.0 kW / 3.0 kW	20A / 30A	4.8.6
	400 V	2.0 kW / 3.0 kW	20D / 30D	
	200 V	5.0 kW	50A	4.8.7
	400 V	5.0 kW	50D	

(3) Duct-ventilated Type

Supply Voltage		SERVOPACK		Reference
		Capacity	Model SGDH-□□□E-P	
Three-phase	200 V	6.0 kW / 7.5 kW	60A / 75A	4.9.1
	400 V	6.0 kW / 7.5 kW	60D / 75D	4.9.2
	200 V	11.0 kW / 15.0 kW	1AA / 1EA	4.9.3
	400 V	11.0 kW / 15.0 kW	1AD / 1ED	4.9.4

4.7 Dimensional Drawings of Base-mounted SERVOPACK Model

4.7.1 Single-phase 100 V: 30 W/50 W/100 W (A3BE/A5BE/01BE) Single-phase 200 V: 30 W/50 W/100 W/200 W (A3AE/A5AE/01AE/02AE)

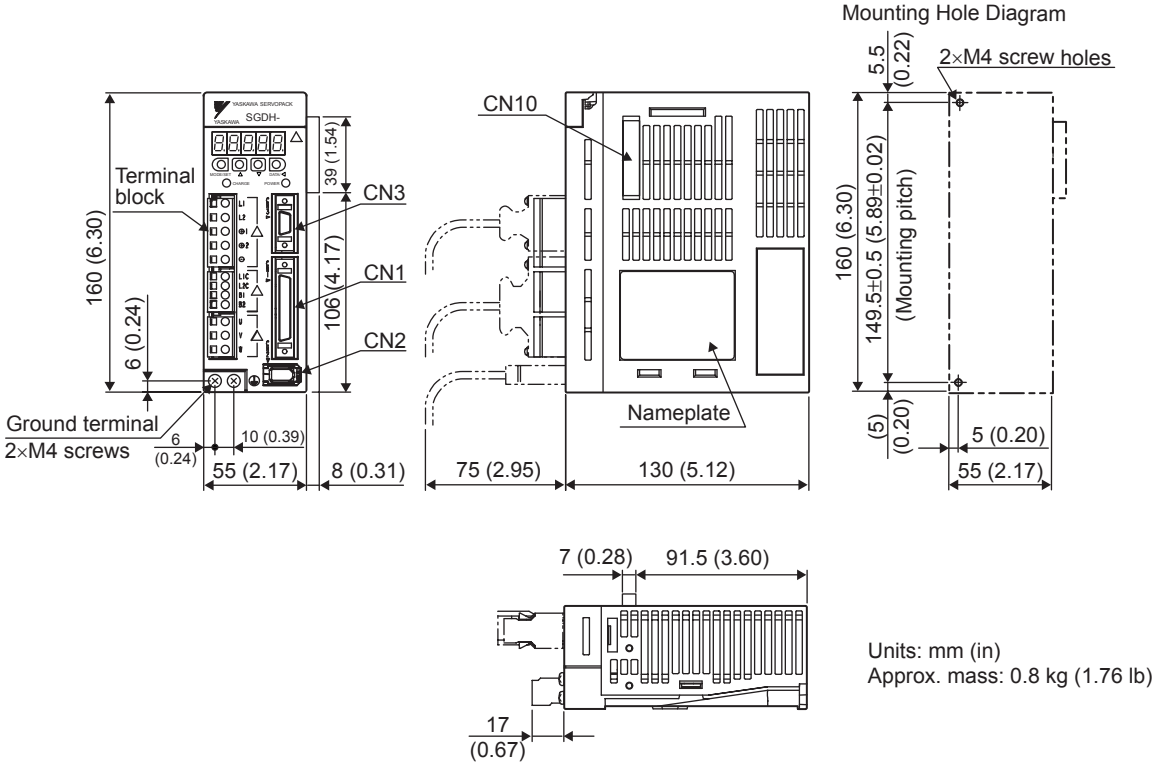

Units: mm (in)
Approx. mass: 0.8 kg (1.76 lb)

External Terminal Connector

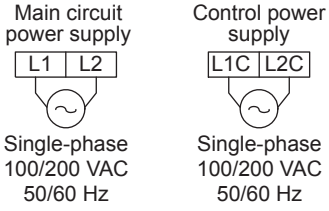

SERVOPACK Connector

Connector Symbol	SERVOPACK Connector Model	Manufacturer
CN1	10250-52A2JL	Sumitomo 3M Co., Ltd.
CN2	53460-0611	Molex Japan Co., Ltd.
CN3	10214-52A2JL	Sumitomo 3M Co., Ltd.

4.7.2 Single-phase 100 V: 200 W (02BE)
Single-phase 200 V: 400 W (04AE)

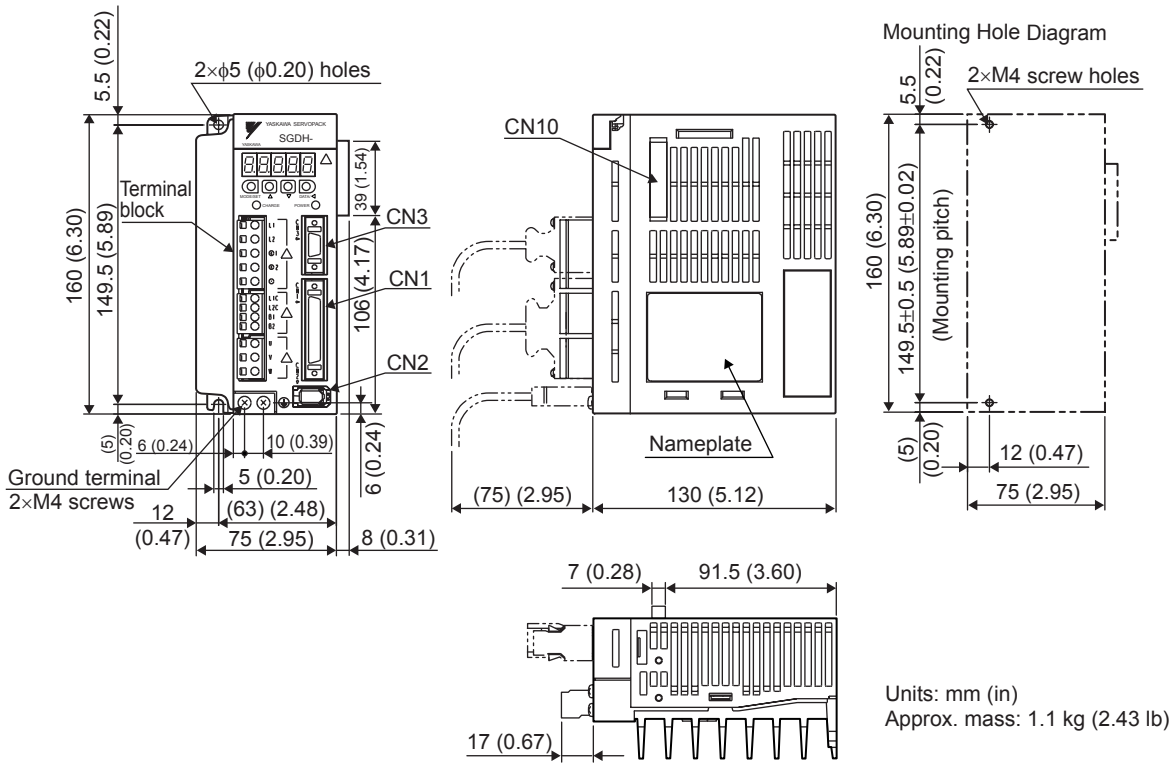

Units: mm (in)
Approx. mass: 1.1 kg (2.43 lb)

External Terminal Connector

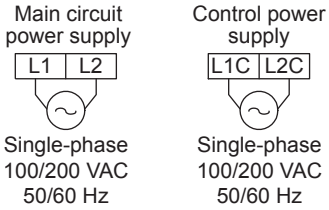

SERVOPACK Connector

Connector Symbol	SERVOPACK Connector Model	Manufacturer
CN1	10250-52A2JL	Sumitomo 3M Co., Ltd.
CN2	53460-0611	Molex Japan Co., Ltd.
CN3	10214-52A2JL	Sumitomo 3M Co., Ltd.

4.7.3 Three-phase 200 V: 500 W/750 W/1.0 kW (05AE/08AE/10AE) Single-phase 220 V: 750 W (08AE-S)

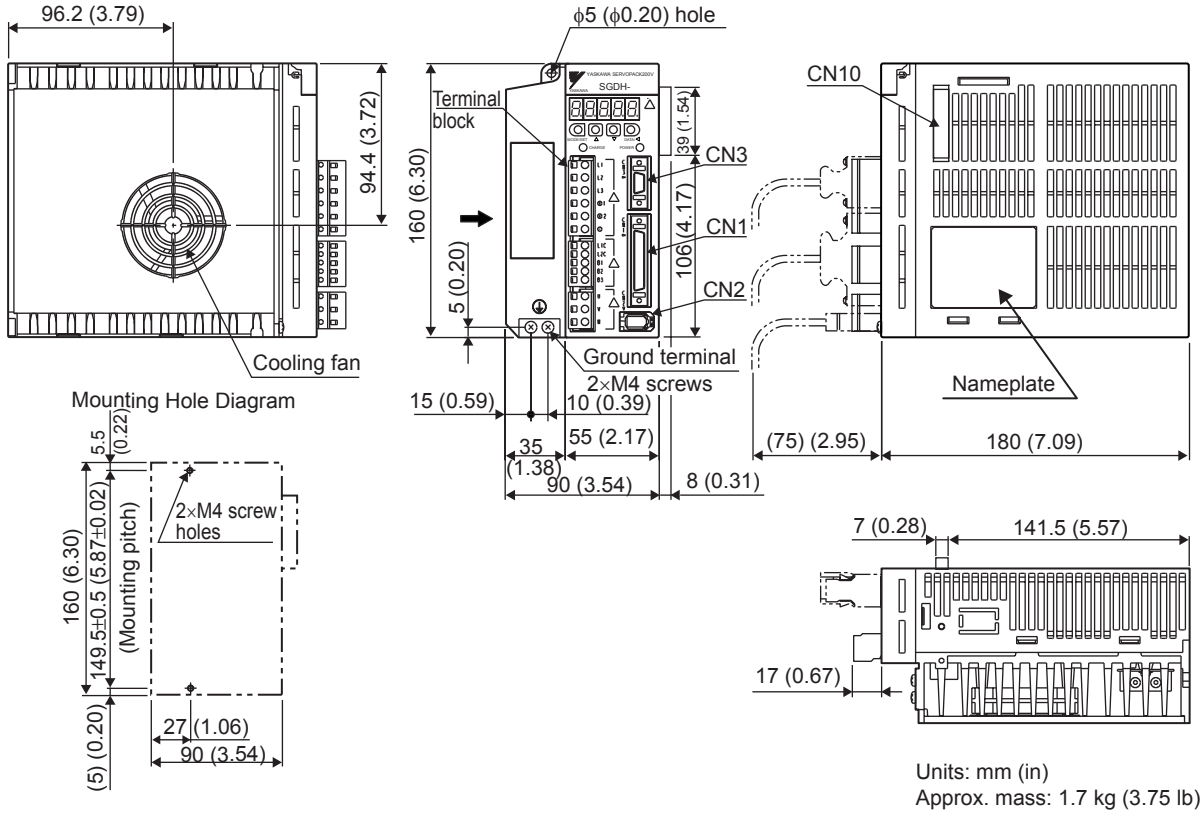

Units: mm (in)
Approx. mass: 1.7 kg (3.75 lb)

External Terminal Connector

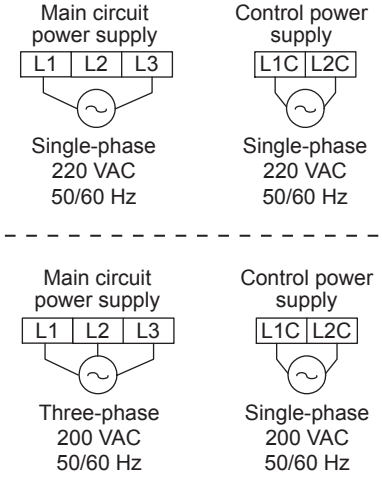

SERVOPACK Connector

Connector Symbol	SERVOPACK Connector Model	Manufacturer
CN1	10250-52A2JL	Sumitomo 3M Co., Ltd.
CN2	53460-0611	Molex Japan Co., Ltd.
CN3	10214-52A2JL	Sumitomo 3M Co., Ltd.

4.7.4 Three-phase 200 V: 1.5 kW (15AE)
Three-phase 400 V: 500 W/750 W/1.0 kW/1.5 kW (05DE/08DE/10DE/15DE)

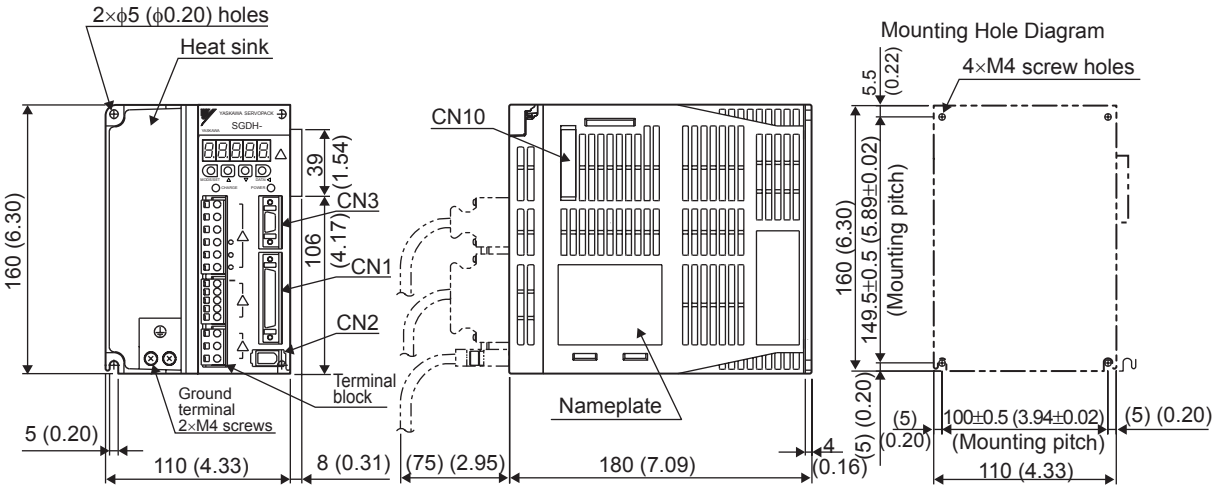

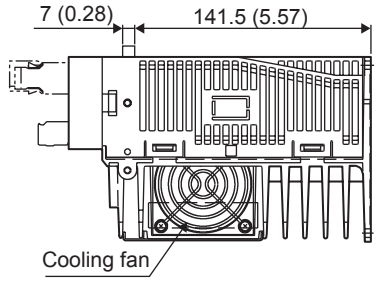

Units: mm (in)
Approx. mass: 2.8 kg (6.17 lb)

External Terminal Connector

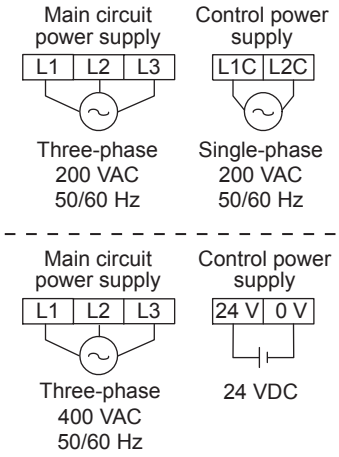

SERVOPACK Connector

Connector Symbol	SERVOPACK Connector Model	Manufacturer
CN1	10250-52A2JL	Sumitomo 3M Co., Ltd.
CN2	53460-0611	Molex Japan Co., Ltd.
CN3	10214-52A2JL	Sumitomo 3M Co., Ltd.

4.7.5 Single-phase 220 V: 1.5 kW (15AE-S) Three-phase 200 V: 2.0 kW/3.0 kW (20AE/30AE) Three-phase 400 V: 2.0 kW/3.0 kW (20DE/30DE)

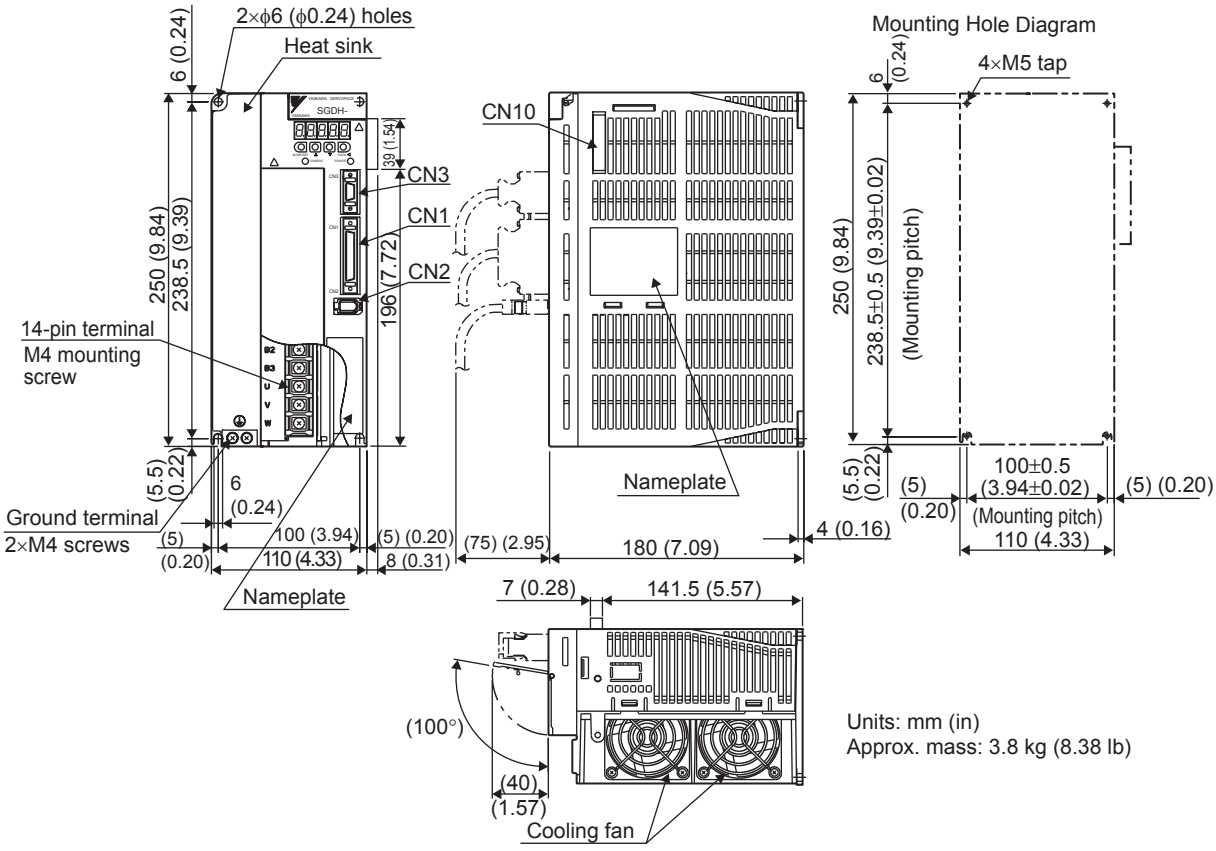

External Terminal Connector

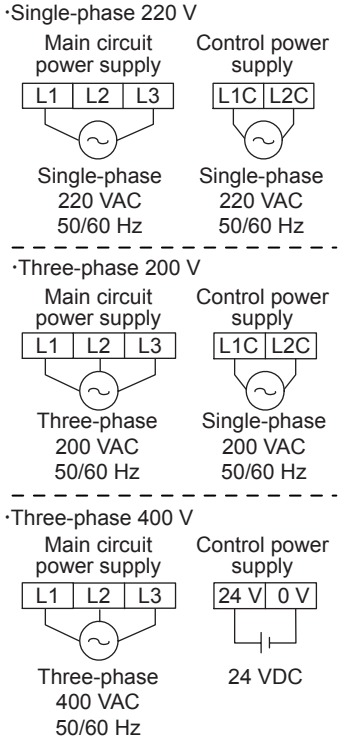

SERVOPACK Connector

Connector Symbol	SERVOPACK Connector Model	Manufacturer
CN1	10250-52A2JL	Sumitomo 3M Co., Ltd.
CN2	53460-0611	Molex Japan Co., Ltd.
CN3	10214-52A2JL	Sumitomo 3M Co., Ltd.

4.7.6 Three-phase 200 V: 5.0 kW (50AE)
Three-phase 400 V: 5.0 kW (50DE)

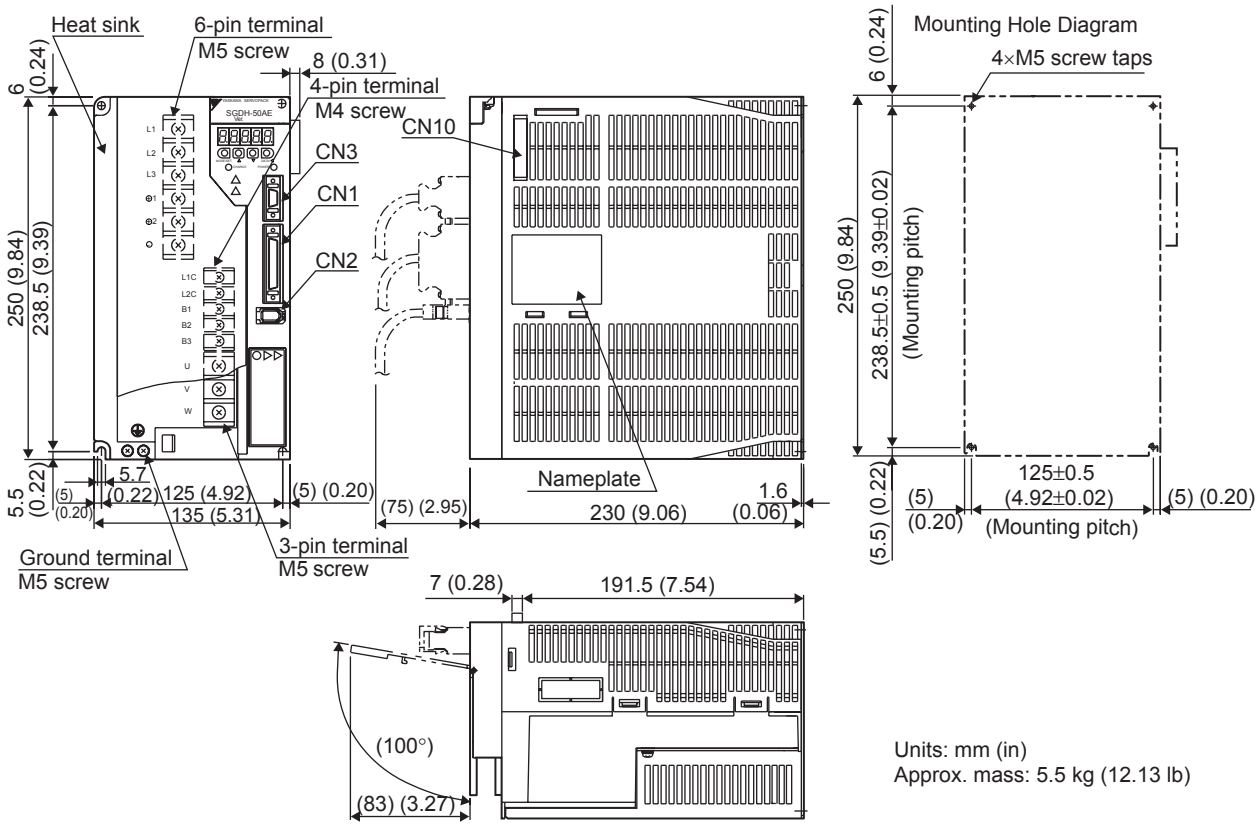

Units: mm (in)
Approx. mass: 5.5 kg (12.13 lb)

External Terminal Connector

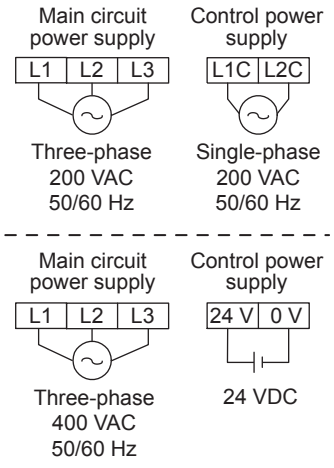

SERVOPACK Connector

Connector Symbol	SERVOPACK Connector Model	Manufacturer
CN1	10250-52A2JL	Sumitomo 3M Co., Ltd.
CN2	53460-0611	Molex Japan Co., Ltd.
CN3	10214-52A2JL	Sumitomo 3M Co., Ltd.

4.7.7 Three-phase 200 V: 6.0 kW/7.5 kW (60AE/75AE)

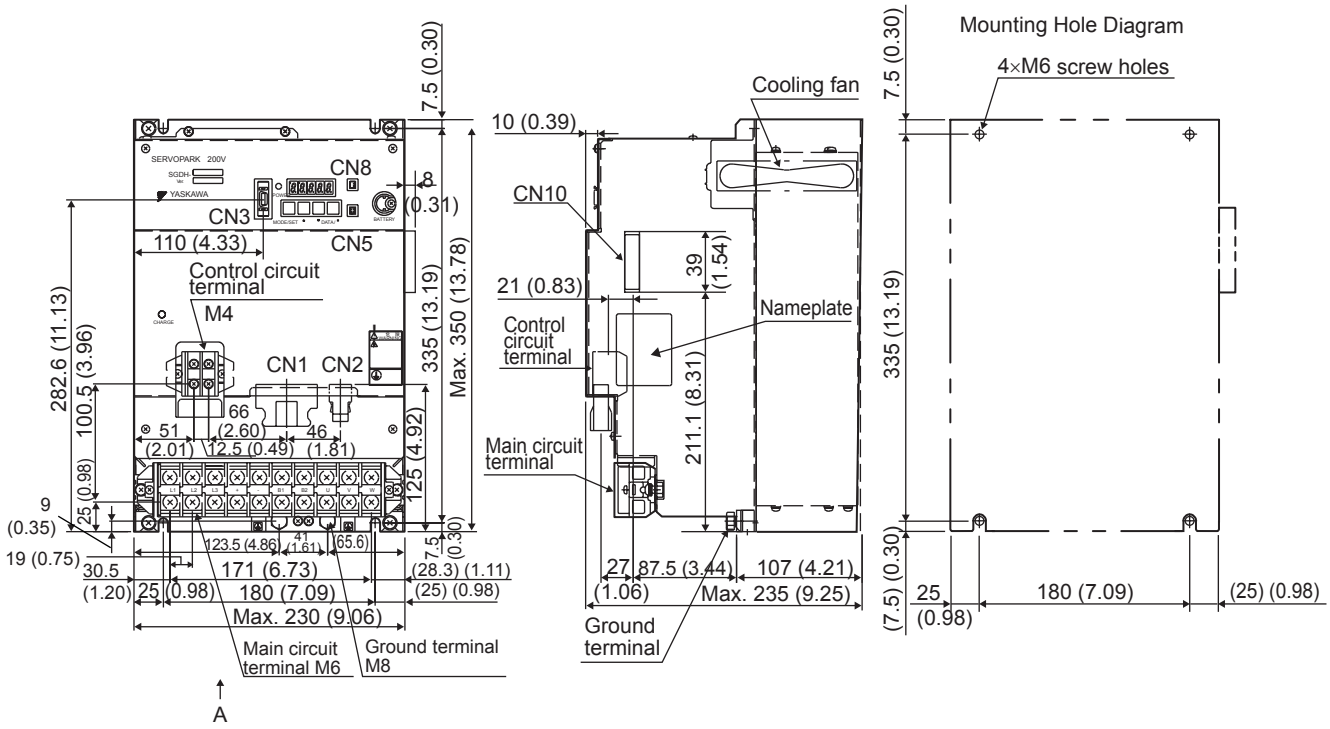

View A

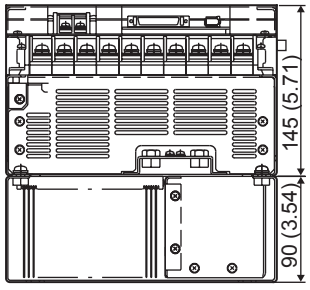

Units: mm (in)
Approx. mass: 14.3 kg (31.53 lb)

External Terminal Connector

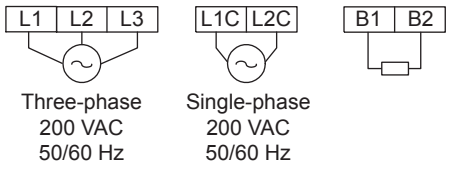

SERVOPACK Connector

Connector Symbol	SERVOPACK Connector Model	Manufacturer
CN1	10250-52A2JL	Sumitomo 3M Co., Ltd.
CN2	53460-0611	Molex Japan Co., Ltd.
CN3	10214-52A2JL	Sumitomo 3M Co., Ltd.

4.7.8 Three-phase 400 V: 6.0 kW/7.5 kW (60DE/75DE)

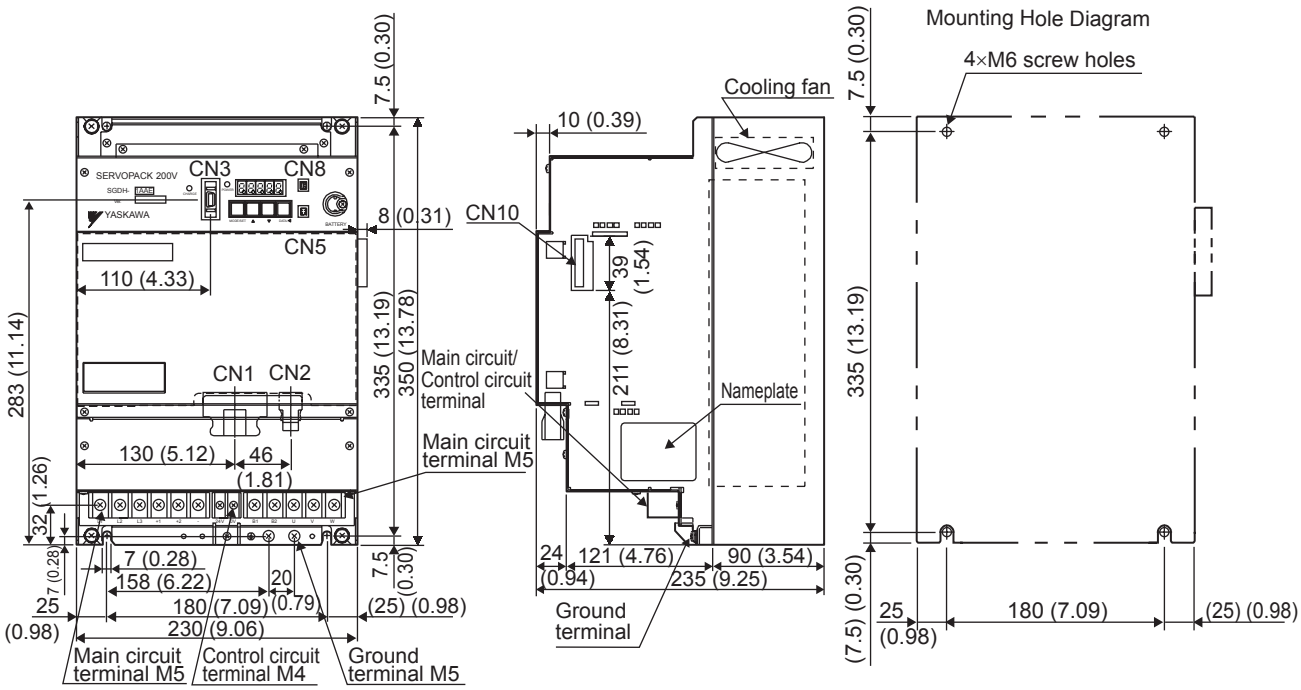

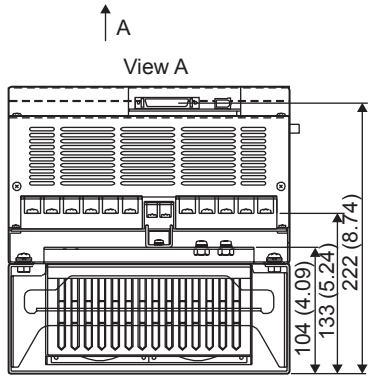

Units: mm (in)
Approx. mass: 13.5 kg (29.76 lb)

External Terminal Connector

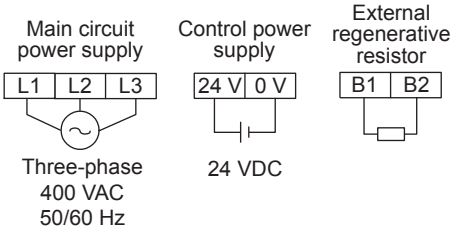

SERVOPACK Connector

Connector Symbol	SERVOPACK Connector Model	Manufacturer
CN1	10250-52A2JL	Sumitomo 3M Co., Ltd.
CN2	53460-0611	Molex Japan Co., Ltd.
CN3	10214-52A2JL	Sumitomo 3M Co., Ltd.

4.7.9 Three-phase 200 V: 11.0 kW/15.0 kW (1AAE/1EAE)

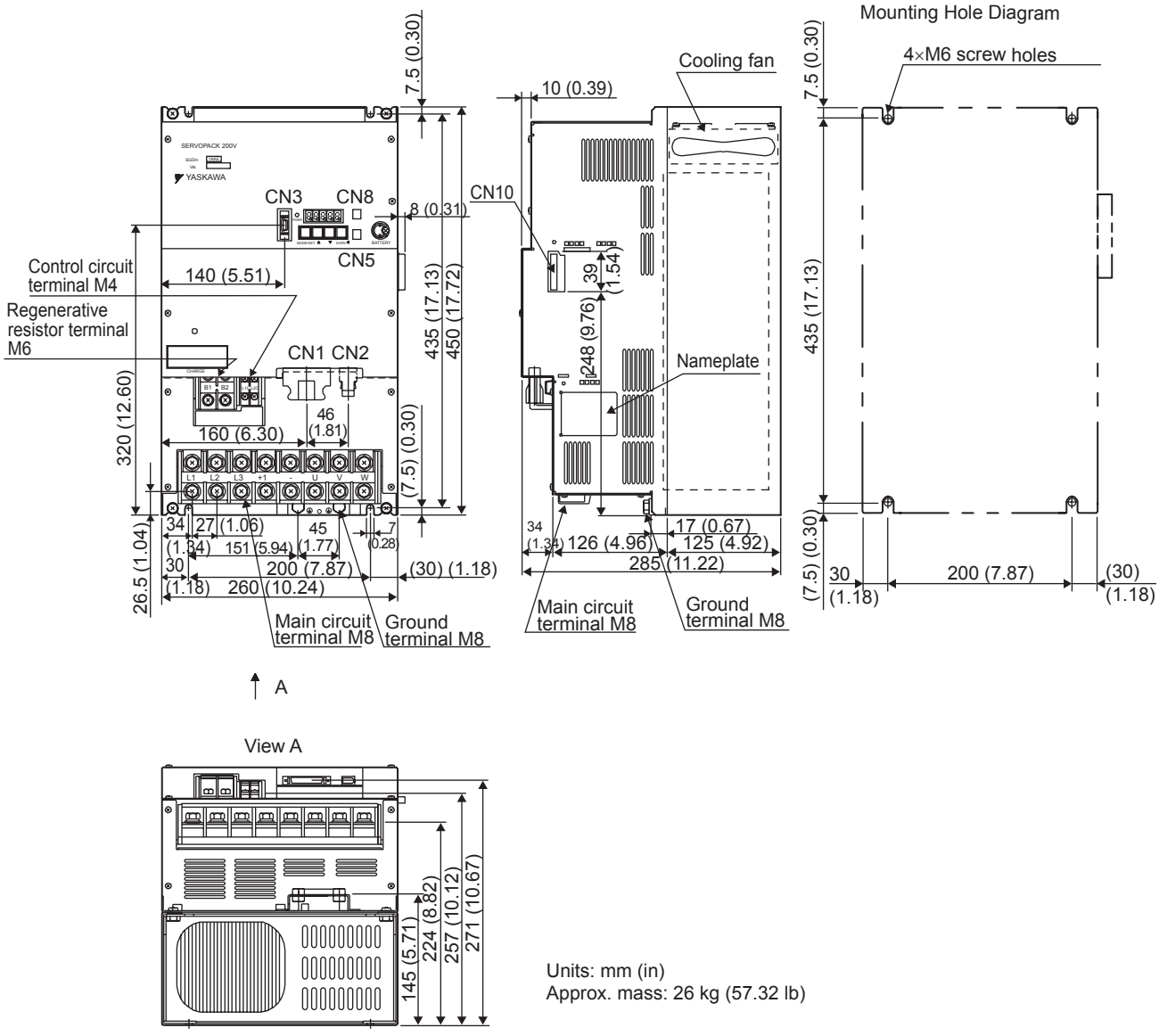

External Terminal Connector

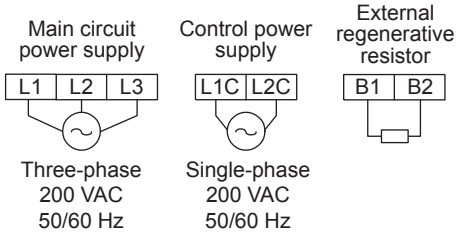

SERVOPACK Connector

Connector Symbol	SERVOPACK Connector Model	Manufacturer
CN1	10250-52A2JL	Sumitomo 3M Co., Ltd.
CN2	53460-0611	Molex Japan Co., Ltd.
CN3	10214-52A2JL	Sumitomo 3M Co., Ltd.

4.7.10 Three-phase 400 V: 11.0 kW/15.0 kW (1ADE/1EDE)

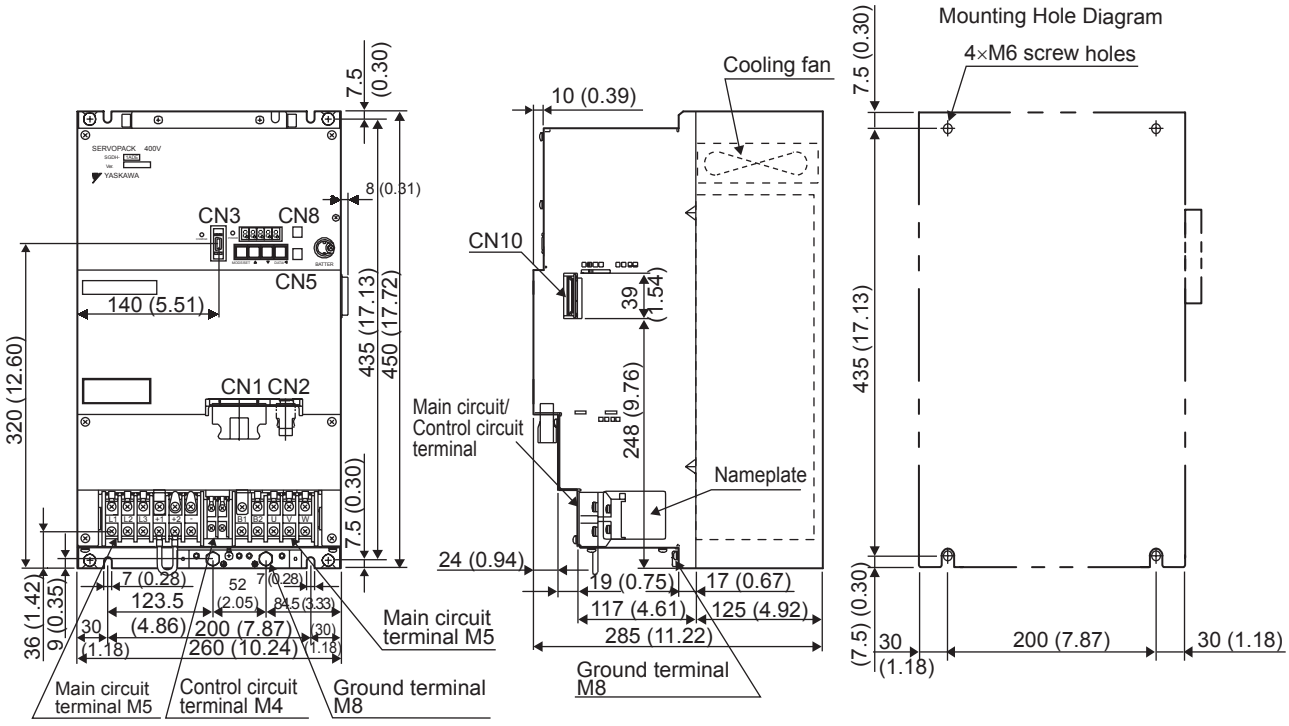

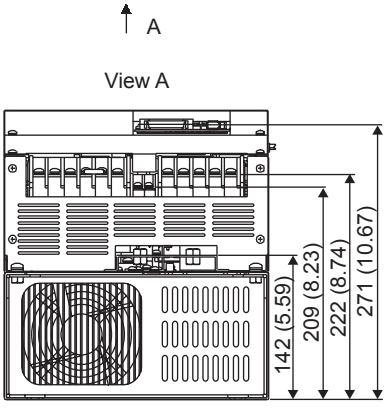

Units: mm (in)
Approx. mass: 22 kg (48.50 lb)

External Terminal Connector

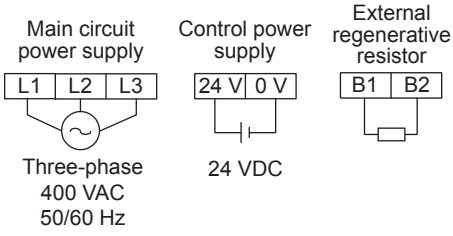

SERVOPACK Connector

Connector Symbol	SERVOPACK Connector Model	Manufacturer
CN1	10250-52A2JL	Sumitomo 3M Co., Ltd.
CN2	53460-0611	Molex Japan Co., Ltd.
CN3	10214-52A2JL	Sumitomo 3M Co., Ltd.

4.8 Dimensional Drawings of Rack-mounted SERVOPACK Model

4.8.1 Single-phase 100 V: 30 W/50 W/100 W (A3BE-R/A5BE-R/01BE-R) Single-phase 200 V: 30 W/50 W/100 W/200 W (A3AE-R/A5AE-R/01AE-R/ 02AE-R)

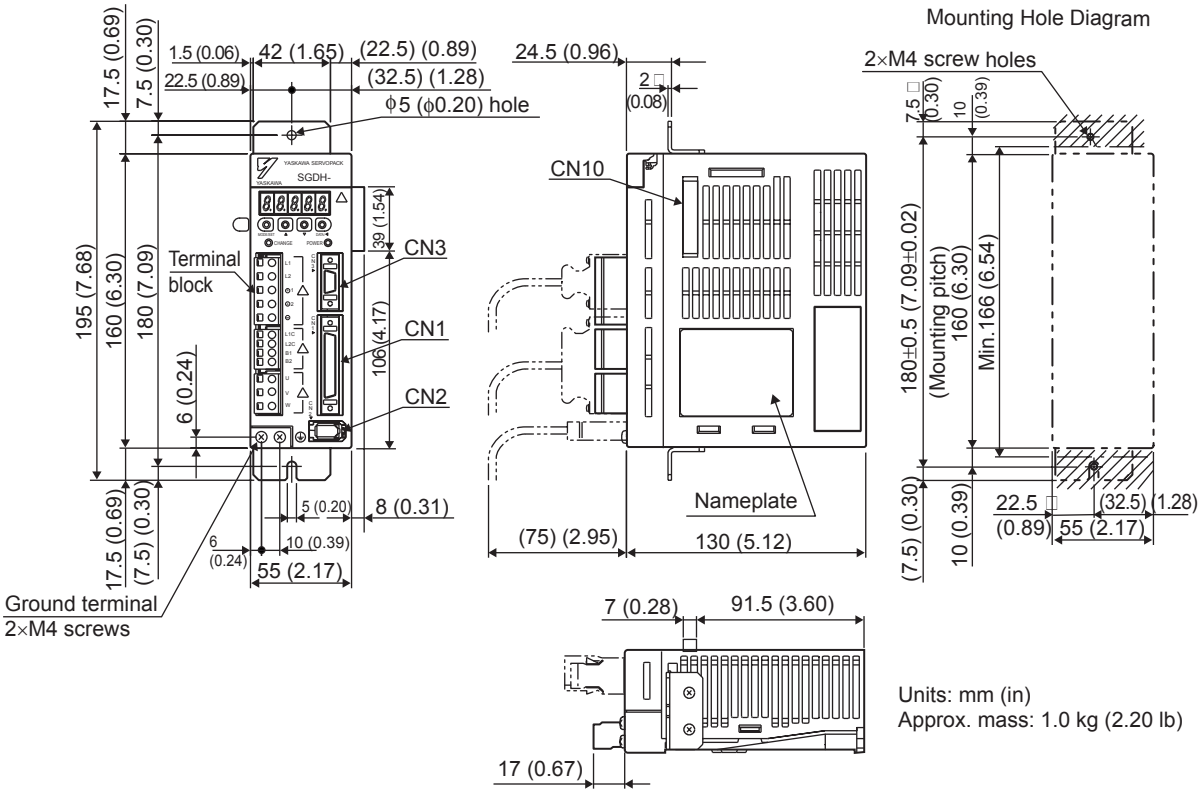

External Terminal Connector

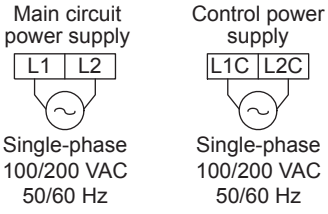

SERVOPACK Connector

Connector Symbol	SERVOPACK Connector Model	Manufacturer
CN1	10250-52A2JL	Sumitomo 3M Co., Ltd.
CN2	53460-0611	Molex Japan Co., Ltd.
CN3	10214-52A2JL	Sumitomo 3M Co., Ltd.

4.8.2 Single-phase 100 V: 200 W (02BE-R)
Single-phase 200 V: 400 W (04AE-R)

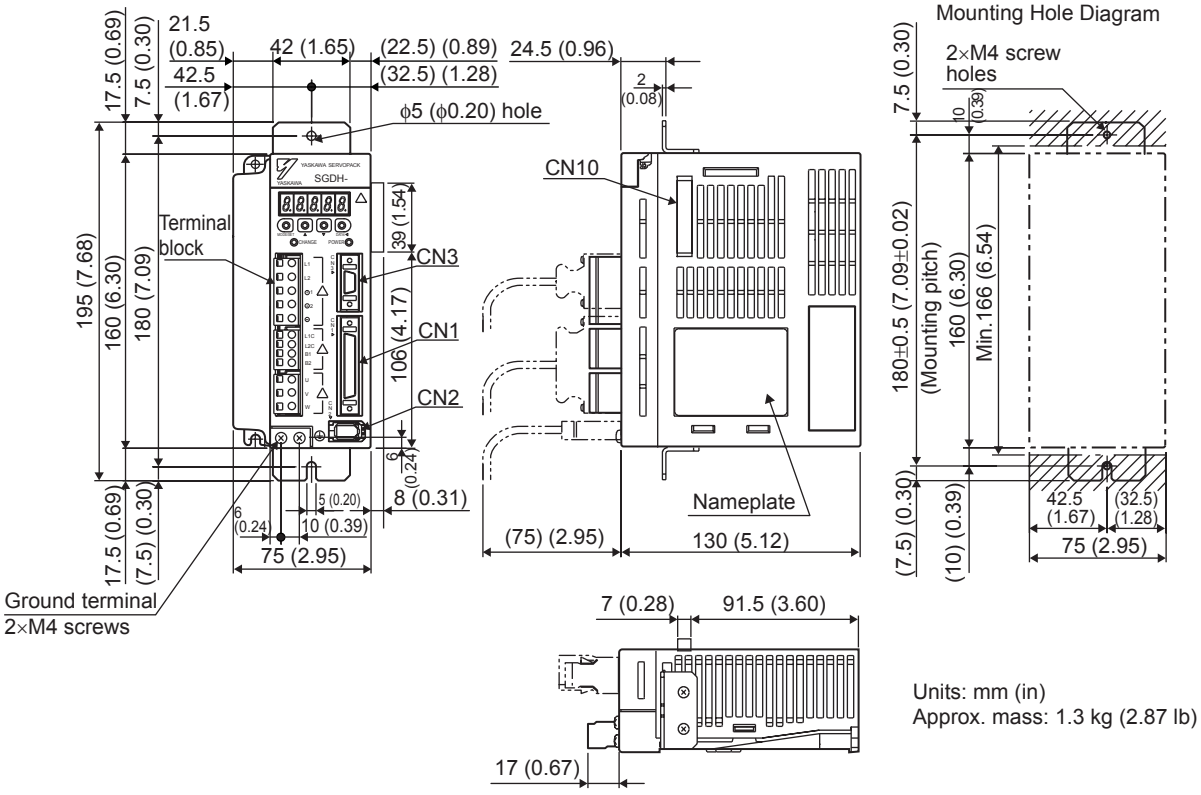

External Terminal Connector

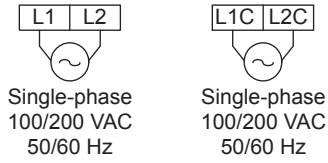

SERVOPACK Connector

Connector Symbol	SERVOPACK Connector Model	Manufacturer
CN1	10250-52A2JL	Sumitomo 3M Co., Ltd.
CN2	53460-0611	Molex Japan Co., Ltd.
CN3	10214-52A2JL	Sumitomo 3M Co., Ltd.

4.8.3 Single-phase 220 V: 750 W (08AE-S-R) Three-phase 200 V: 500 W/750 W/1.0 kW (05AE-R/08AE-R/10AE-R)

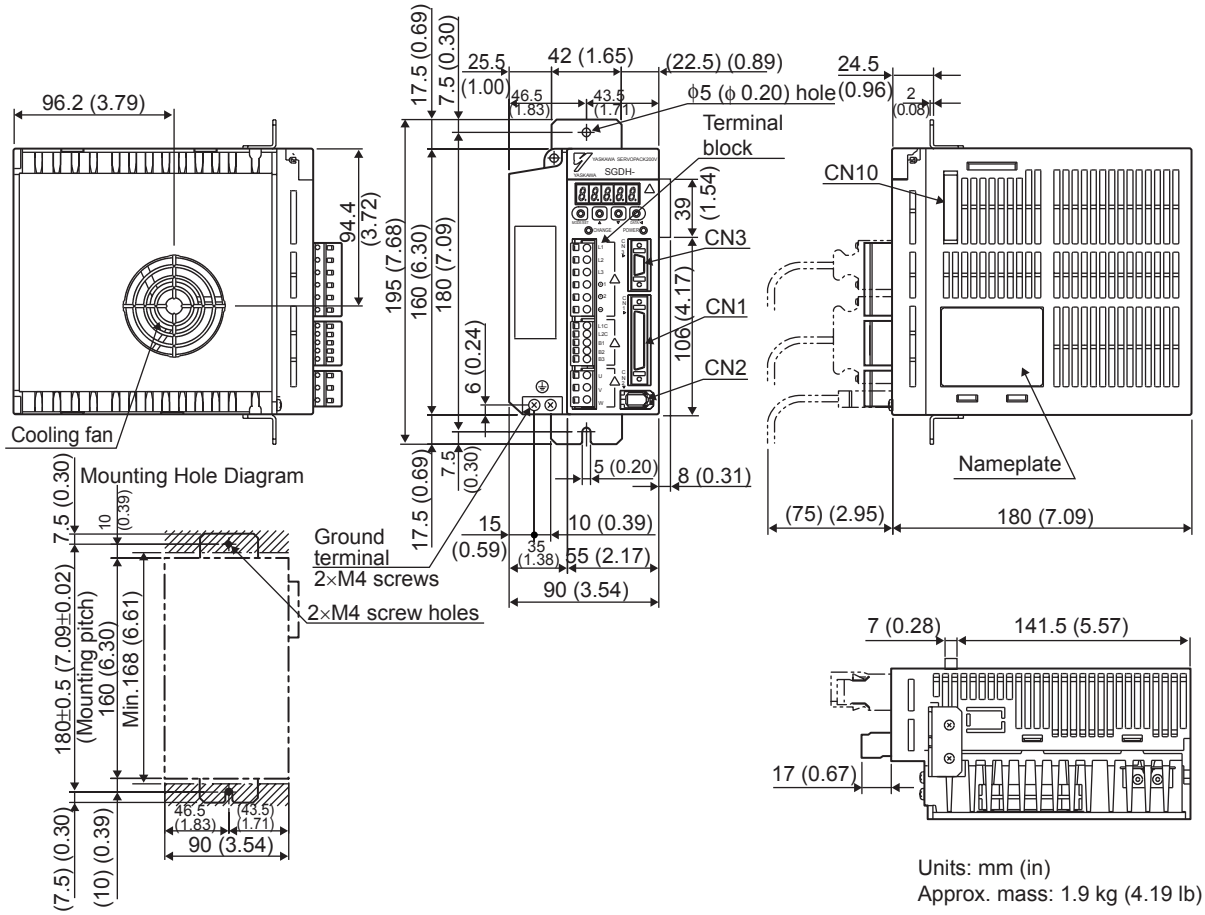

Units: mm (in)
Approx. mass: 1.9 kg (4.19 lb)

External Terminal Connector

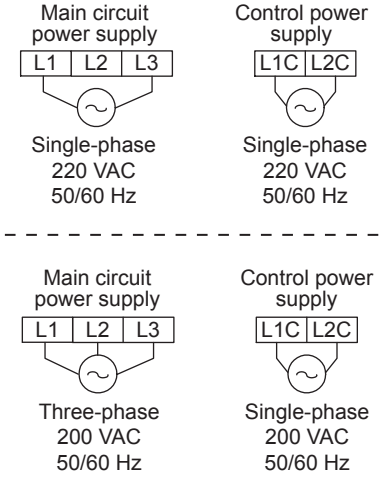

SERVOPACK Connector

Connector Symbol	SERVOPACK Connector Model	Manufacturer
CN1	10250-52A2JL	Sumitomo 3M Co., Ltd.
CN2	53460-0611	Molex Japan Co., Ltd.
CN3	10214-52A2JL	Sumitomo 3M Co., Ltd.

4.8.4 Three-phase 200 V: 1.5 kW (15AE-R)
Three-phase 400 V: 500 W/750 W/1.0 kW/1.5 kW (05DE-R/08DE-R/10DE-R/15DE-R)

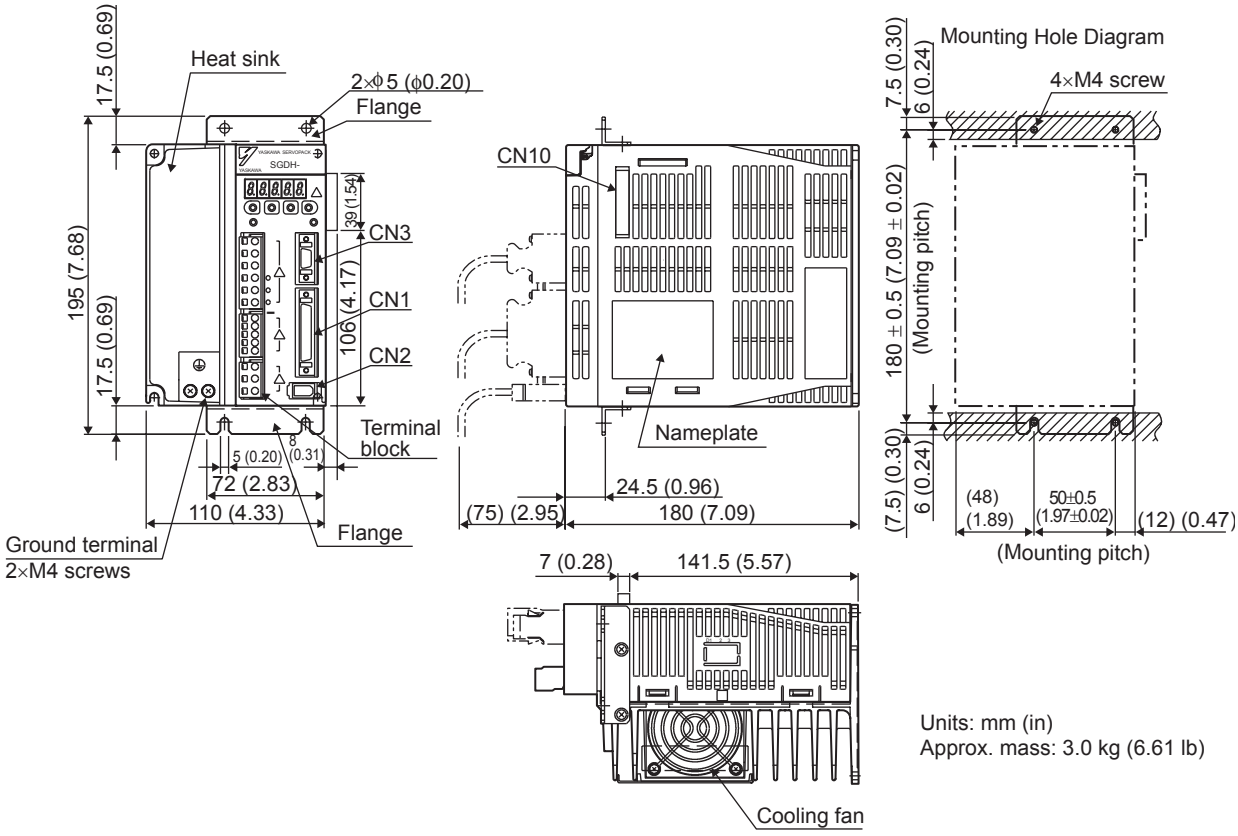

Units: mm (in)
Approx. mass: 3.0 kg (6.61 lb)

External Terminal Connector

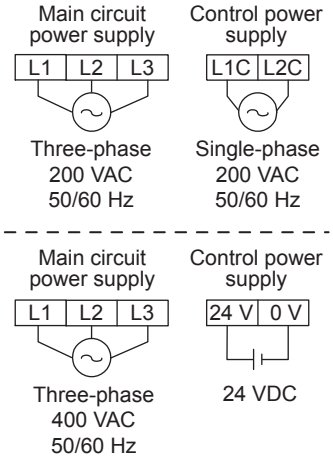

SERVOPACK Connector

Connector Symbol	SERVOPACK Connector Model	Manufacturer
CN1	10250-52A2JL	Sumitomo 3M Co., Ltd.
CN2	53460-0611	Molex Japan Co., Ltd.
CN3	10214-52A2JL	Sumitomo 3M Co., Ltd.

4.8.5 Single-phase 220 V: 1.5 kW (15AE-S-R)

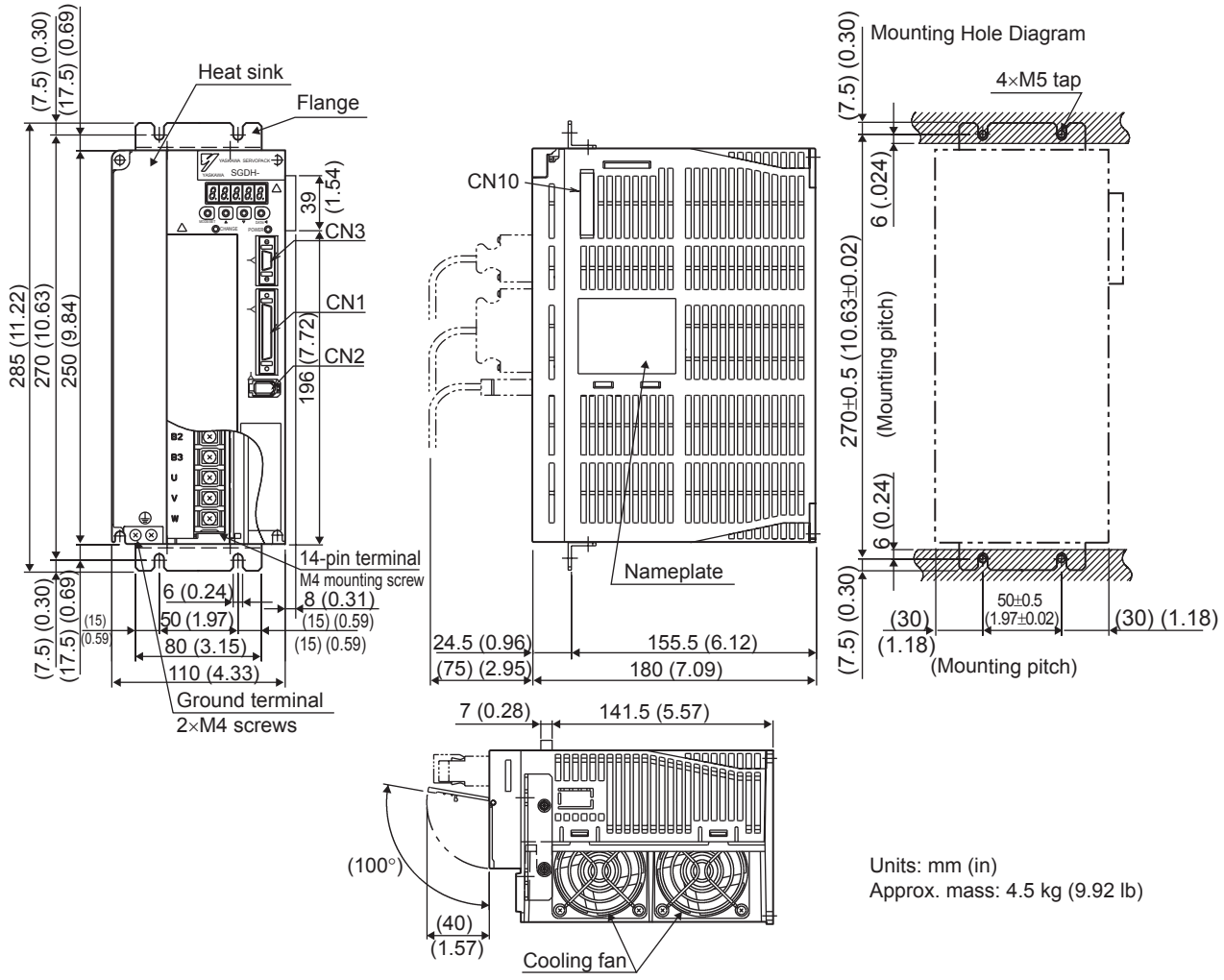

External Terminal Connector

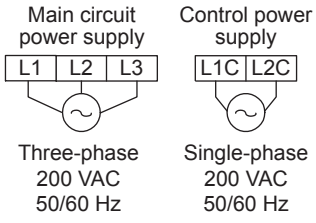

SERVOPACK Connector

Connector Symbol	SERVOPACK Connector Model	Manufacturer
CN1	10250-52A2JL	Sumitomo 3M Co., Ltd.
CN2	53460-0611	Molex Japan Co., Ltd.
CN3	10214-52A2JL	Sumitomo 3M Co., Ltd.

4.8.6 Three-phase 200 V: 2.0 kW/3.0 kW (20AE-R/30AE-R) Three-phase 400 V: 2.0 kW/3.0 kW (20DE-R/30DE-R)

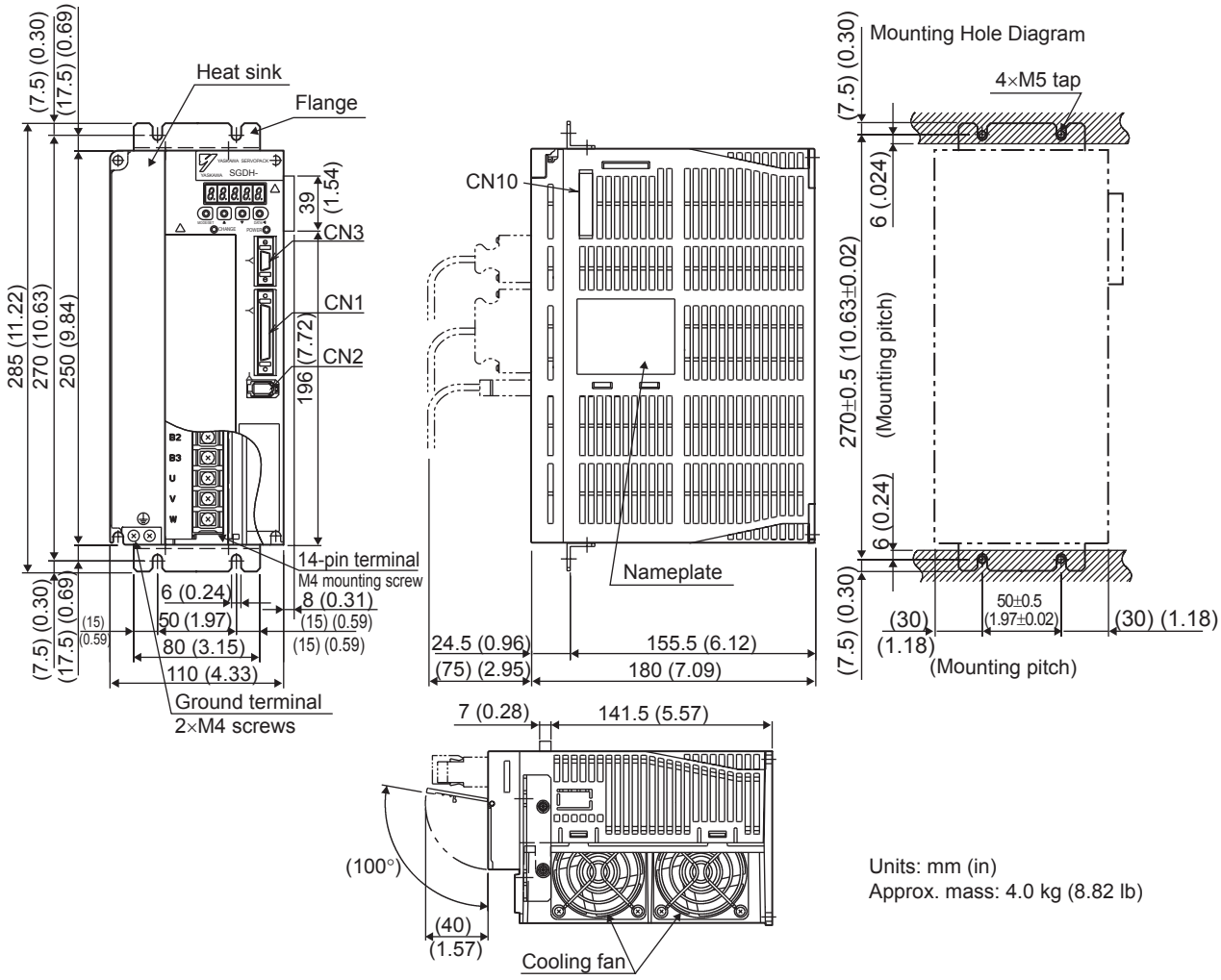

External Terminal Connector

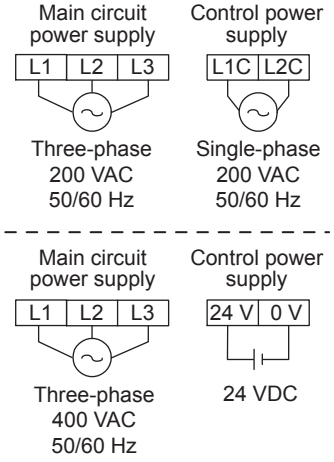

SERVOPACK Connector

Connector Symbol	SERVOPACK Connector Model	Manufacturer
CN1	10250-52A2JL	Sumitomo 3M Co., Ltd.
CN2	53460-0611	Molex Japan Co., Ltd.
CN3	10214-52A2JL	Sumitomo 3M Co., Ltd.

4.8.7 Three-phase 200 V: 5.0 kW (50AE-R) Three-phase 400 V: 5.0 kW (50DE-R)

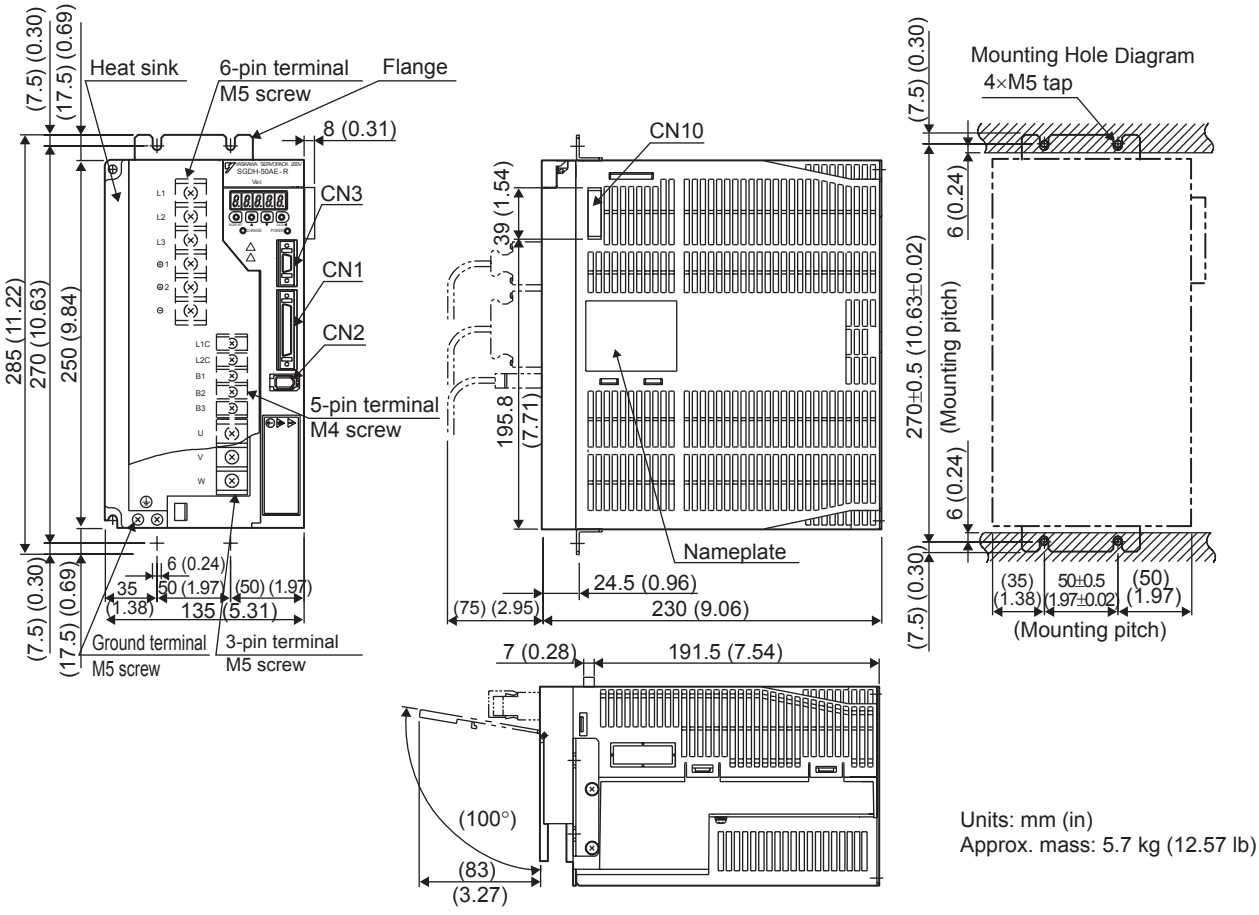

External Terminal Connector

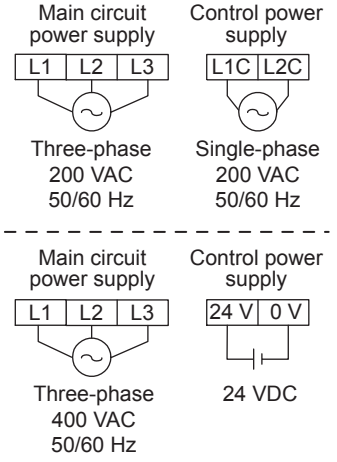

SERVOPACK Connector

Connector Symbol	SERVOPACK Connector Model	Manufacturer
CN1	10250-52A2JL	Sumitomo 3M Co., Ltd.
CN2	53460-0611	Molex Japan Co., Ltd.
CN3	10214-52A2JL	Sumitomo 3M Co., Ltd.

4.9 Dimensional Drawings of Duct-ventilated SERVOPACK Model

4.9.1 Three-phase 200 V: 6.0 kW/7.5 kW (60AE-P/75AE-P)

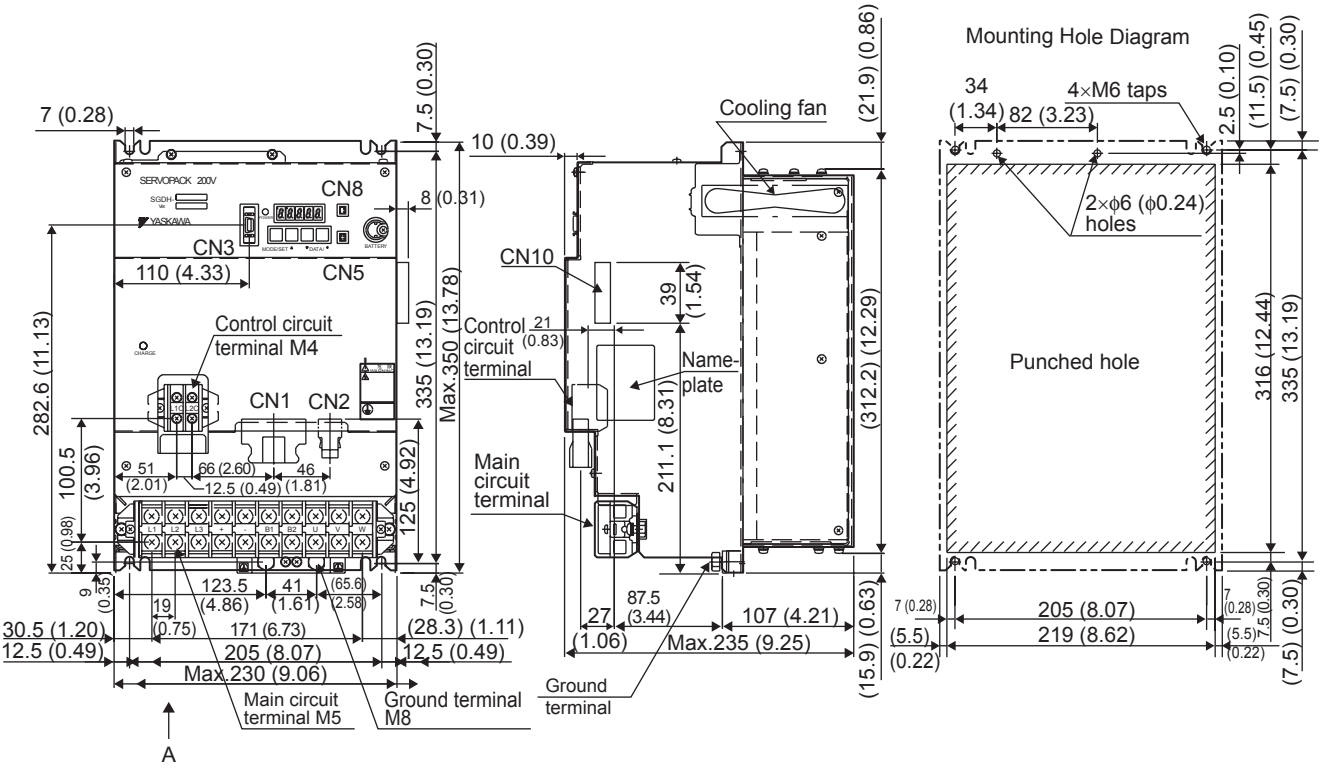

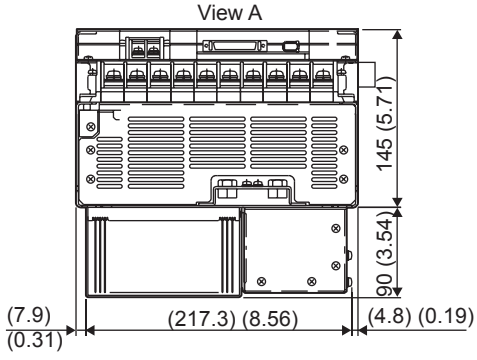

Units: mm (in)
Approx. mass: 14 kg (30.86 lb)

External Terminal Connector

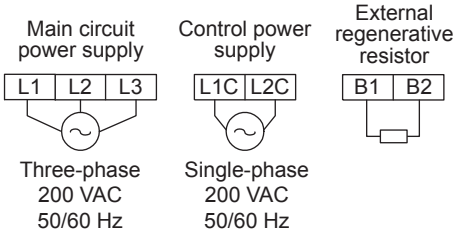

SERVOPACK Connector

Connector Symbol	SERVOPACK Connector Model	Manufacturer
CN1	10250-52A2JL	Sumitomo 3M Co., Ltd.
CN2	53460-0611	Molex Japan Co., Ltd.
CN3	10214-52A2JL	Sumitomo 3M Co., Ltd.

4.9.2 Three-phase 400 V: 6.0 kW/7.5 kW (60DE-P/75DE-P)

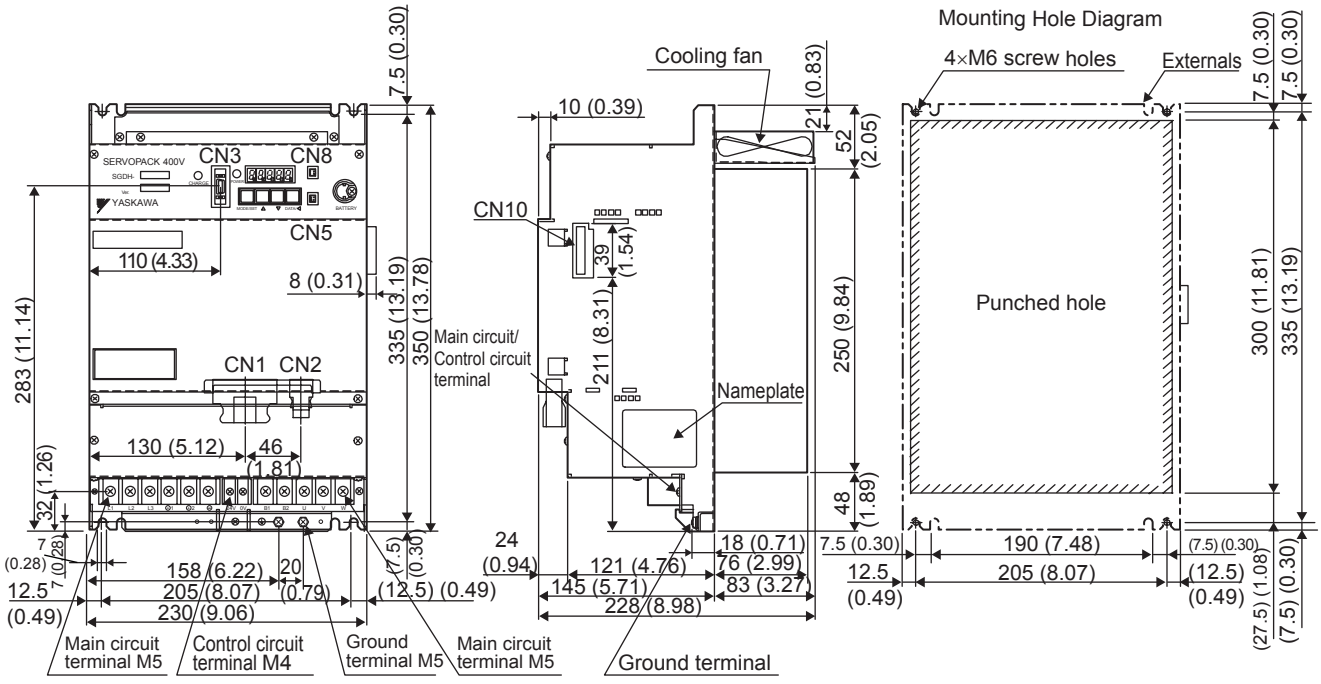

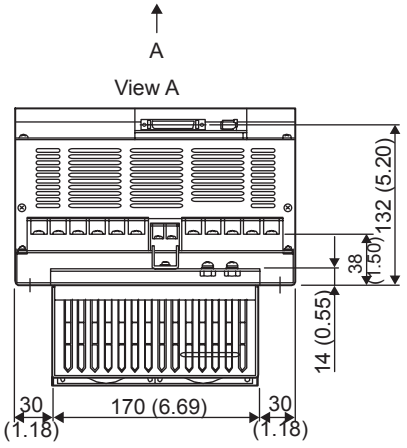

Units: mm (in)
Approx. mass: 11.5 kg (25.35 lb)

External Terminal Connector

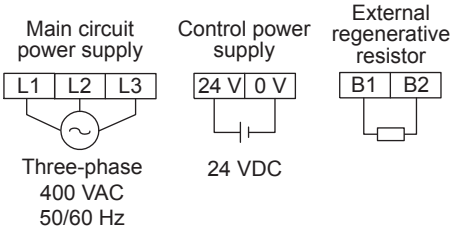

SERVOPACK Connector

Connector Symbol	SERVOPACK Connector Model	Manufacturer
CN1	10250-52A2JL	Sumitomo 3M Co., Ltd.
CN2	53460-0611	Molex Japan Co., Ltd.
CN3	10214-52A2JL	Sumitomo 3M Co., Ltd.

4.9.3 Three-phase 200 V: 11.0 kW/15.0 kW (1AAE-P/1EAE-P)

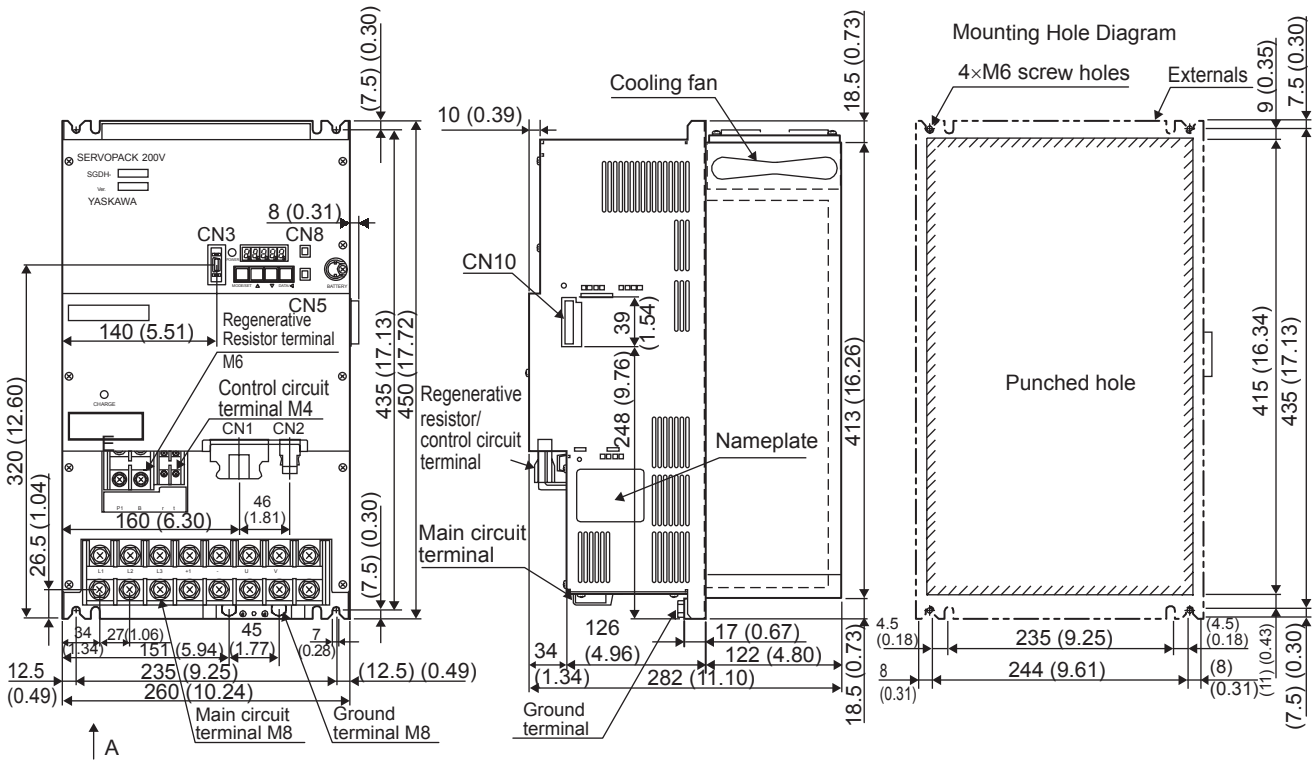

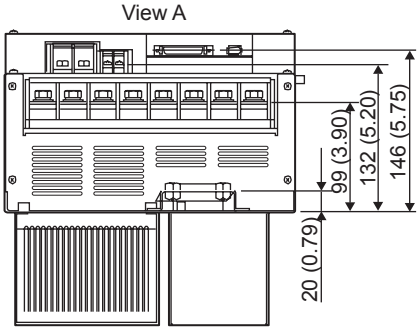

Units: mm (in)
Approx. mass: 22 kg (48.50 lb)

External Terminal Connector

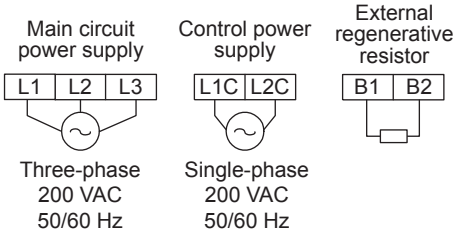

SERVOPACK Connector

Connector Symbol	SERVOPACK Connector Model	Manufacturer
CN1	10250-52A2JL	Sumitomo 3M Co., Ltd.
CN2	53460-0611	Molex Japan Co., Ltd.
CN3	10214-52A2JL	Sumitomo 3M Co., Ltd.

4.9.4 Three-phase 400 V: 11.0 kW/15.0 kW (1ADE-P/1EDE-P)

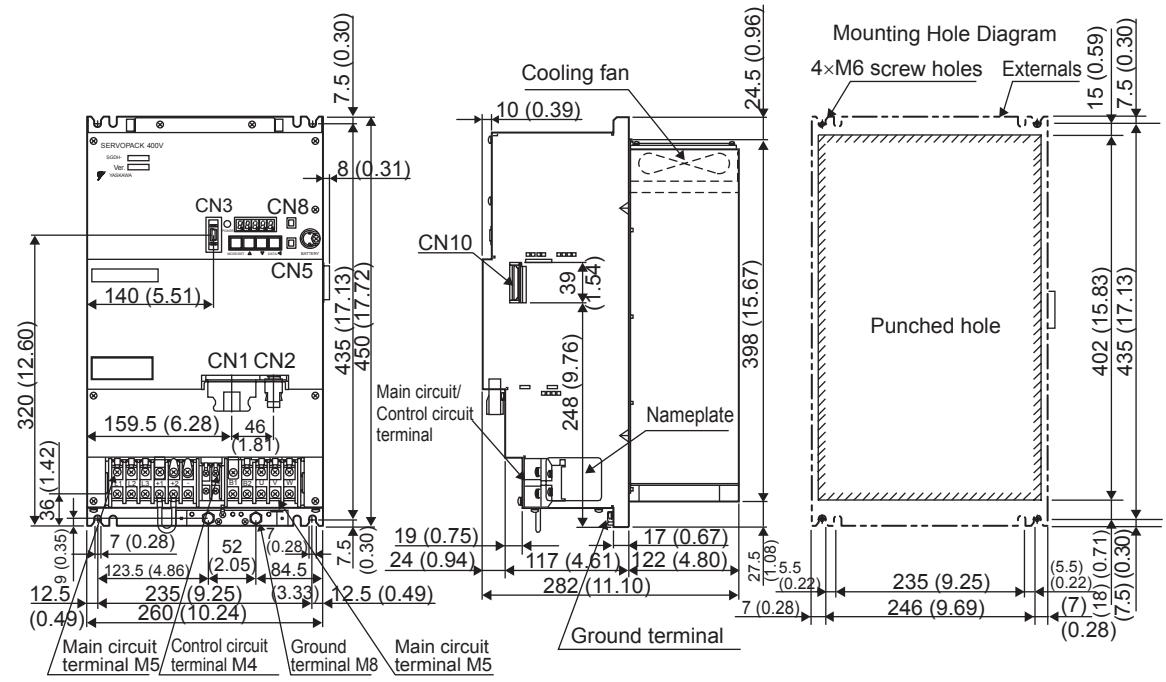

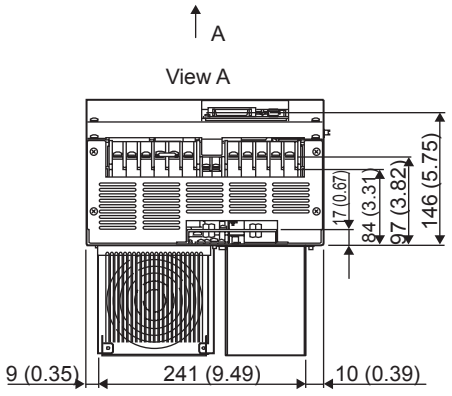

Units: mm (in)
Approx. mass: 18 kg (39.68 lb)

External Terminal Connector

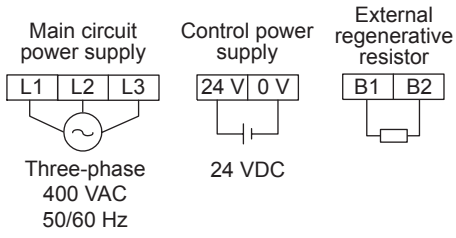

SERVOPACK Connector

Connector Symbol	SERVOPACK Connector Model	Manufacturer
CN1	10250-52A2JL	Sumitomo 3M Co., Ltd.
CN2	53460-0611	Molex Japan Co., Ltd.
CN3	10214-52A2JL	Sumitomo 3M Co., Ltd.

5

Specifications and Dimensional Drawings of Cables and Peripheral Devices

5.1 Specifications and Dimensional Drawings of Servomotor Main Circuit Cable - 5-3

5.1.1 Cables for SGMAH and SGMPH Servomotors Without Brakes - - - - - 5-3

5.1.2 Cables for SGMAH and SGMPH Servomotors With Brakes - - - - - - - - 5-3

5.1.3 Flexible Cables for SGMAH and SGMPH Servomotors Without Brakes 5-4

5.1.4 Flexible Cables for SGMAH and SGMPH Servomotors With Brakes - - 5-5

5.1.5 Cables for 400 V SGMAH and SGMPH Servomotors Without Brakes - 5-5

5.1.6 Cables for 400 V SGMAH and SGMPH Servomotors With Brakes - - - 5-6

5.2 Servomotor Main Circuit Wire Size and Connectors - - - - - - - - 5-7

5.2.1 Wire Size - 5-7

5.2.2 SGMAH and SGMPH Servomotor Connectors for Standard Environments - 5-8

5.2.3 SGMGH, SGMSH, SGMDH, and SGMUH Servomotor Connector Configurations - 5-11

5.2.4 SGMGH Servomotor (1500 min^{-1}) Connectors for Standard Environments - 5-12

5.2.5 SGMGH Servomotor (1000 min^{-1}) Connectors for Standard Environments - 5-15

5.2.6 SGMSH Servomotor (3000 min^{-1}) Connectors for Standard Environments - 5-17

5.2.7 SGMDH Servomotor (2000 min^{-1}) Connectors for Standard Environments - 5-19

5.2.8 SGMUH Servomotor (6000 min^{-1}) Connectors for Standard Environments - 5-19

5.2.9 SGMGH Servomotor (1500 min^{-1}) Connectors Conforming to IP67 and European Safety Standards - 5-22

5.2.10 SGMGH Servomotor (1000 min^{-1}) Connectors Conforming to IP67 and European Safety Standards - 5-27

5.2.11 SGMSH Servomotors (3000 min^{-1}) Connectors Conforming to IP67 and European Safety Standards - 5-30

5.2.12 SGMDH Servomotors (2000 min^{-1}) Connectors Conforming to IP67 and European Safety Standards - 5-34

5.2.13 SGMUH Servomotors (6000 min^{-1}) Connectors Conforming to IP67 and European Safety Standards - 5-35
5.2.14 Connector Dimensional Drawings - 5-38

5.3 SERVOPACK Main Circuit Wire Size - - - - - - - - - - - - - - - - 5-45
5.3.1 Cable Types - 5-45
5.3.2 Single-phase 100 V - 5-46
5.3.3 Single-phase 200 V - 5-46
5.3.4 Three-phase 200 V - 5-46
5.3.5 Three-phase 400 V - 5-47

5.4 Encoder Cables for CN2 Connector - - - - - - - - - - - - - - - - - - 5-48
5.4.1 Encoder Cable With Connectors For SGMAH and SGMPH Servomotors - 5-48
5.4.2 Encoder Cable for SGMGH, SGMSH, SGMDH, and SGMUH Servomotors - 5-48
5.4.3 Encoder Cable With a SERVOPACK Connector and Encoder Loose Leads for SGMAH and SGMPH Servomotors - - - - - - 5-49
5.4.4 Encoder Cable with a SERVOPACK Connector and Encoder Loose Leads for SGMGH, SGMSH, SGMDH, and SGMUH Servomotors - 5-50
5.4.5 Encoder Flexible Cables for SGMAH and SGMPH Servomotors - - - - 5-52
5.4.6 Encoder Flexible Cables for SGMGH, SGMSH, SGMDH, and SGMUH Servomotors - 5-53

5.5 Connectors and Cables for Encoder Signals - - - - - - - - - - - - 5-55
5.5.1 Connectors and Cables for SGMAH and SGMPH Servomotors - - - - 5-55
5.5.2 Connectors and Cables for SGMGH, SGMSH, SGMDH, and SGMUH Servomotors - 5-57

5.6 Flexible Cables - 5-59

5.7 I/O Signal Cables for CN1 Connector - - - - - - - - - - - - - - - - - 5-60
5.7.1 Standard Cables - 5-60
5.7.2 Connector Type and Cable Size - 5-60
5.7.3 Connection Diagram - 5-62

5.8 Peripheral Devices - 5-63
5.8.1 Cables for Connecting Personal Computers - - - - - - - - - - - - - - - - - - - 5-63
5.8.2 Digital Operator - 5-64
5.8.3 Cables for Analog Monitor - 5-65
5.8.4 Connector Terminal Block Converter Unit - 5-66
5.8.5 Brake Power Supply Unit - 5-67
5.8.6 External Regenerative Resistor - 5-69
5.8.7 Regenerative Resistor Unit - 5-71
5.8.8 Absolute Encoder Battery - 5-72
5.8.9 Molded-case Circuit Breaker (MCCB) - 5-73
5.8.10 Noise Filter - 5-75
5.8.11 Magnetic Contactor - 5-80
5.8.12 Surge Suppressor - 5-84
5.8.13 DC Reactor for Harmonic Suppression - 5-86
5.8.14 Variable Resistor for Speed and Torque Setting - - - - - - - - - - - - - - - 5-88
5.8.15 Encoder Signal Converter Unit - 5-89
5.8.16 MECHATROLINK-I I/F Unit - 5-90
5.8.17 DeviceNet I/F Unit - 5-91
5.8.18 PROFIBUS-DP I/F Unit - 5-92
5.8.19 INDEXER Module - 5-94
5.8.20 Setup Support Tool SigmaIndexer - 5-95
5.8.21 Fully-closed I/F Unit - 5-96

5.1 Specifications and Dimensional Drawings of Servomotor Main Circuit Cable

Contact Yaskawa Controls Co., Ltd. for SGMGH, SGMSH, SGMDH, and SGMUH Servomotor main circuit cables.
When assembling the servomotor main circuit cable, refer to *5.2 Servomotor Main Circuit Wire Size and Connectors*.

5.1.1 Cables for SGMAH and SGMPH Servomotors Without Brakes

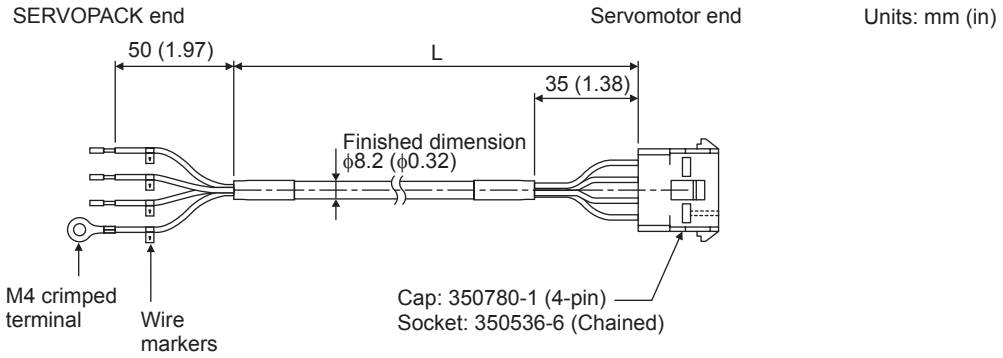

Units: m (ft)

Applicable Servomotor Models	Cable Type	Cable Length (L)	Applicable Servomotor Models	Cable Type	Cable Length (L)
SGMAH 200 V: 30 to 750 W 100 V: 30 to 200 W SGMPH 200 V: 100 to 750 W 100 V: 100 W and 200 W	JZSP-CMM00-03	3 (9.84)	SGMPH 200 V: 1.5 kW	JZSP-CMM20-03	3 (9.84)
	JZSP-CMM00-05	5 (16.40)		JZSP-CMM20-05	5 (16.40)
	JZSP-CMM00-10	10 (32.81)		JZSP-CMM20-10	10 (32.81)
	JZSP-CMM00-15	15 (49.21)		JZSP-CMM20-15	15 (49.21)
	JZSP-CMM00-20	20 (65.62)		JZSP-CMM20-20	20 (65.62)

5.1.2 Cables for SGMAH and SGMPH Servomotors With Brakes

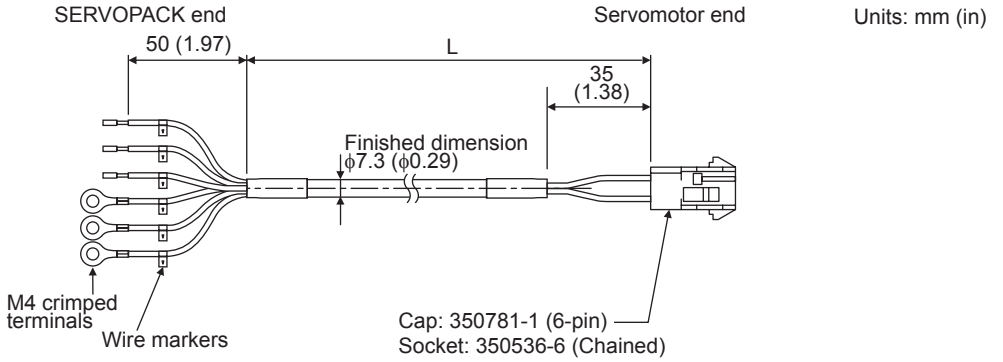

Units: m (ft)

Applicable Servomotor Models	Cable Type	Cable Length (L)	Applicable Servomotor Models	Cable Type	Cable Length (L)
SGMAH 200 V: 30 to 750 W 100 V: 30 to 200 W SGMPH 200 V: 100 to 750 W 100 V: 100 and 200 W	JZSP-CMM10-03	3 (9.84)	SGMPH 200 V: 1.5 kW	JZSP-CMM30-03	3 (9.84)
	JZSP-CMM10-05	5 (16.40)		JZSP-CMM30-05	5 (16.40)
	JZSP-CMM10-10	10 (32.81)		JZSP-CMM30-10	10 (32.81)
	JZSP-CMM10-15	15 (49.21)		JZSP-CMM30-15	15 (49.21)
	JZSP-CMM10-20	20 (65.62)		JZSP-CMM30-20	20 (65.62)

5.1.3 Flexible Cables for SGMAH and SGMPH Servomotors Without Brakes

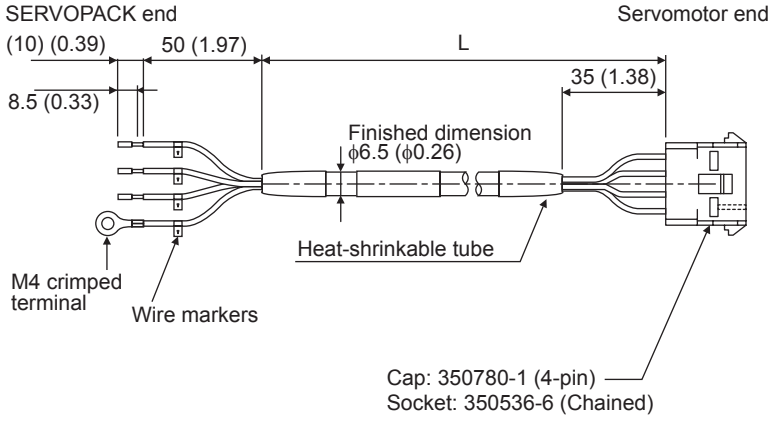

Units: m (ft)

Applicable Servomotor Models	Cable Type	Cable Length (L)
SGMAH 200 V: 30 to 750 W 100 V: 30 to 200 W SGMPH 200 V: 100 to 750 W 100 V: 100 W and 200 W	JZSP-CMM01-03	3 (9.84)
	JZSP-CMM01-05	5 (16.40)
	JZSP-CMM01-10	10 (32.81)
	JZSP-CMM01-15	15 (49.21)
	JZSP-CMM01-20	20 (65.62)

5.1.4 Flexible Cables for SGMAH and SGMPH Servomotors With Brakes

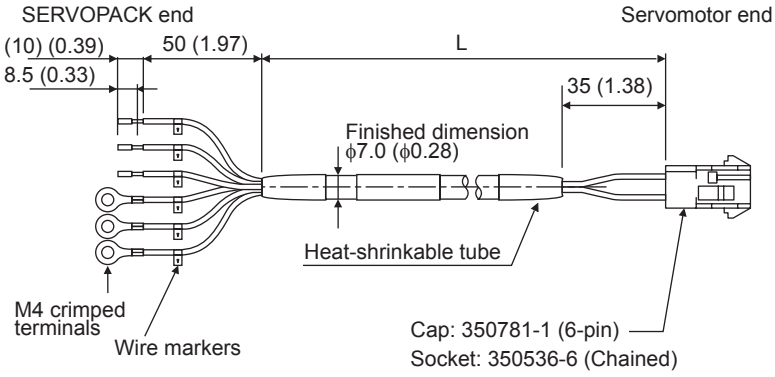

Units: m (ft)

Applicable Servomotor Models	Cable Type	Cable Length (L)
SGMAH 200 V: 30 to 750 W 100 V: 30 to 200 W SGMPH 200 V: 100 to 750 W 100 V: 100 W and 200 W	JZSP-CMM11-03	3 (9.84)
	JZSP-CMM11-05	5 (16.40)
	JZSP-CMM11-10	10 (32.81)
	JZSP-CMM11-15	15 (49.21)
	JZSP-CMM11-20	20 (65.62)

5.1.5 Cables for 400 V SGMAH and SGMPH Servomotors Without Brakes

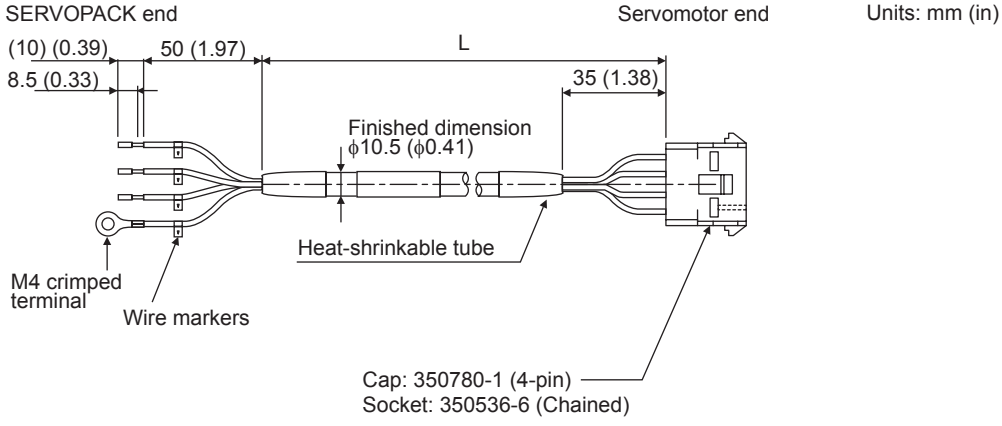

Units: m (ft)

Applicable Servomotor Models	Cable Type	Cable Length (L)
SGMAH 400 V: 300 W and 650 W SGMPH 400 V: 200 W to 1.5kW	JZSP-CMM40-03	3 (9.84)
	JZSP-CMM40-05	5 (16.40)
	JZSP-CMM40-10	10 (32.81)
	JZSP-CMM40-15	15 (49.21)
	JZSP-CMM40-20	20 (65.62)

5.1.6 Cables for 400 V SGMAH and SGMPH Servomotors With Brakes

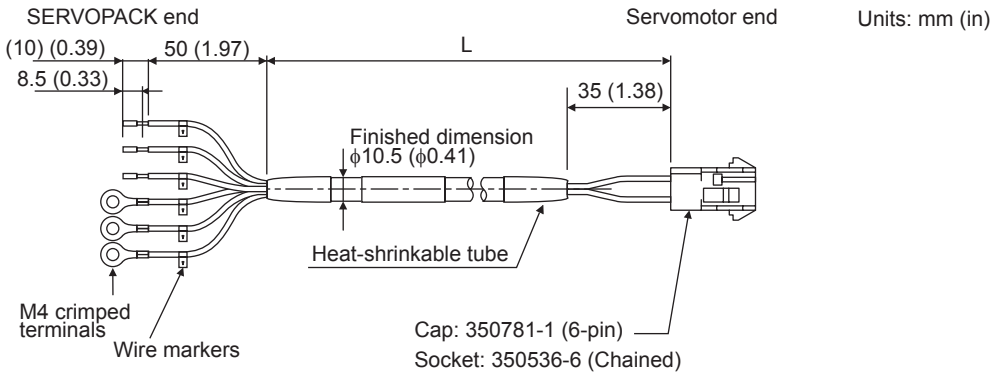

Units: m (ft)

Applicable Servomotor Models	Cable Type	Cable Length (L)
SGMAH 400 V: 300 W and 650 W SGMPH 400 V: 200 W to 1.5 kW	JZSP-CMM50-03	3 (9.84)
	JZSP-CMM50-05	5 (16.40)
	JZSP-CMM50-10	10 (32.81)
	JZSP-CMM50-15	15 (49.21)
	JZSP-CMM50-20	20 (65.62)

5.2 Servomotor Main Circuit Wire Size and Connectors

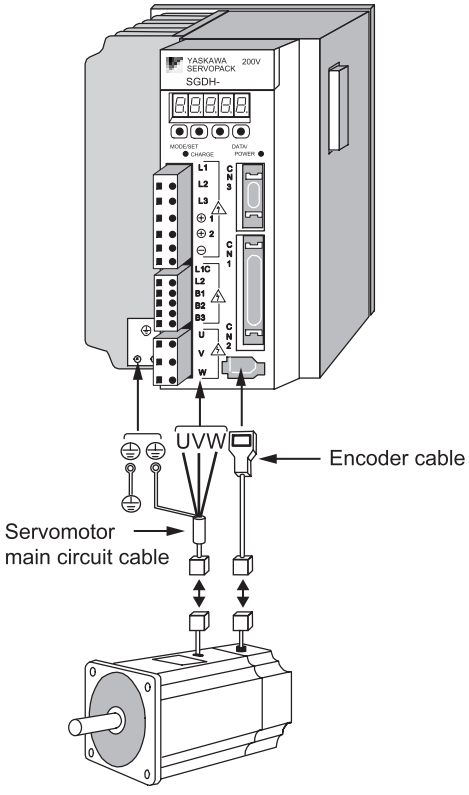

5.2.1 Wire Size

(1) 100 V, 200 V, and 400 V SGMAH Servomotors

Rated Output	30 W to 750 W
Three-phase 100 V	AWG20
Three-phase 200 V	
Three-phase 400 V	

(2) 100 V, 200 V, and 400 V SGMPH Servomotors

Rated Output	100 W	200 to 400 W	750 W	1.5 kW
Three-phase 100 V	AWG22	AWG20		AWG16 (HIV 1.25)
Three-phase 200 V				
Three-phase 400 V				

5

(3) 200 V and 400 V SGMGH Servomotors for 1500 min^{-1}

Rated Output	450 W	850 W	1.3 kW	1.8 kW	2.9 kW	4.4 kW	5.5 kW	7.5 kW	11.0 kW	15.0 kW
Three-phase 200 V	HIV2.0			HIV3.5	HIV5.5	HIV8	HIV14		HIV22	
Three-phase 400 V	HIV1.25			HIV2.0		HIV3.5	HIV5.5		HIV8	HIV14

(4) 200 V SGMGH Servomotors for 1000 min^{-1}

Rated Output	300 W	600 W	900 W	1.2 kW	2.0 kW	3.0 kW	4.0 kW	5.5 kW
Three-phase 200 V	HIV2.0				HIV3.5	HIV5.5	HIV8	HIV14

(5) 200 V and 400 V SGMSH Servomotors

Rated Output	1.0 kW	1.5 kW	2.0 kW	3.0 kW	4.0 kW	5.0 kW
Three-phase 200 V	HIV2.0		HIV3.5		HIV5.5	HIV8
Three-phase 400 V	HIV1.25		HIV2.0		HIV3.5	

(6) 200 V SGMDH Servomotors

Rated Output	2.2 kW	3.2 kW	4.0 kW
Three-phase 200 V	HIV5.5		HIV8

(7) 400 V SGMUH Servomotors

Rated Output	1.0 kW	1.5 kW	3.0 kW	4.0 kW
Three-phase 400 V	HIV1.25		HIV2.0	HIV3.5

5.2.2 SGMAH and SGMPH Servomotor Connectors for Standard Environments

The SGMAH and SGMPH servomotors do not conform to the IEC's IP67 classification (IP67 Protective Construction Standard) and the European Safety Standards.

(1) 30 to 750 W SGMAH Servomotor Connector Kit

Applicable Servomotor Models		Type
100 V: 30 to 200 W 200 V: 30 to 750 W 400 V: 300 to 650 W	Without brakes	JZSP-CMM9-1
	With brakes	JZSP-CMM9-2

(2) 100 W to 1.5 kW SGMPH Servomotor Connector Kit

Applicable Servomotor Models		Type
100 V: 100 W and 200 W 200 V: 100 to 750 W 400 V: 200 to 750 W	Without brakes	JZSP-CMM9-1
	With brakes	JZSP-CMM9-2
200 V: 1.5 kW 400 V: 1.5 kW	Without brakes	JZSP-CMM9-3
	With brakes	JZSP-CMM9-4

(3) 30 to 750 W SGMAH and 100 to 750 W SGMPH Servomotors Without Brakes

(a) Connector Type: JZSP-CMM9-1

Units: mm (in)

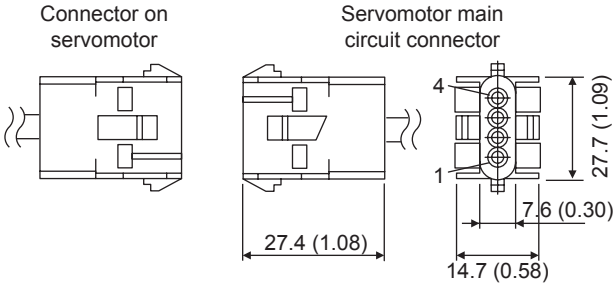

Type	
Cap	350780-1
Socket	350570-3 or 350689-3 Soldered type

(b) Connector Pin Arrangement

Pin No.	Signal	Lead Color
1	Phase U	Red
2	Phase V	White
3	Phase W	Blue
4	FG	Green/Yellow

(4) 30 to 750 W SGMAH and 100 to 750 W SGMPH Servomotors With Brakes

(a) Connector Type: JZSP-CMM9-2

Units: mm (in)

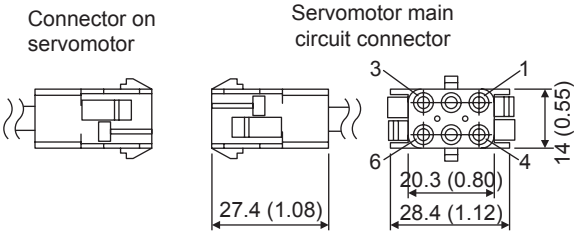

Type	
Cap	350781-1
Socket	350570-3 or 350689-3 Soldered type

(b) Connector Pin Arrangement

Pin No.	Signal	Lead Color	Remarks
1	Phase U	Red	-
2	Phase V	White	-
3	Phase W	Blue	-
4	FG	Green/Yellow	-
5	Brake terminal	Black	No polarity
6	Brake terminal	Black	

5

(5) 1.5 kW SGMPH Servomotors Without Brakes

(a) Connector Type: JZSP-CMM9-3

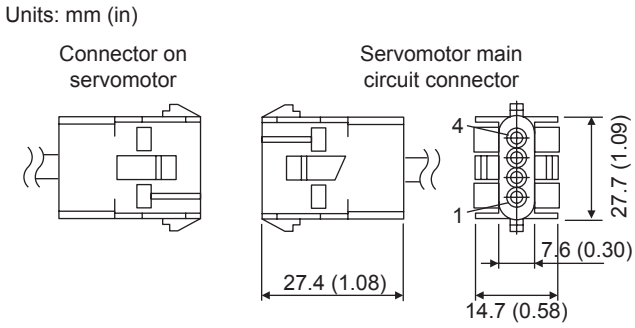

Type	
Cap	350780-1
Socket	350536-6 or 350550-6 (No. 1 to 4) Soldered type

(b) Connector Pin Arrangement

Pin No.	Signal	Lead Color
1	Phase U	Red
2	Phase V	White
3	Phase W	Blue
4	FG	Green/Yellow

(6) 1.5 kW SGMPH Servomotors With Brakes

(a) Connector Type: JZSP-CMM9-4

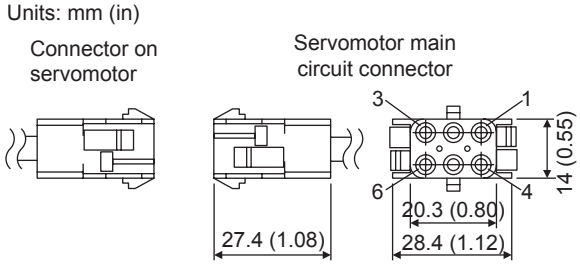

Type	
Cap	350781-1
Socket	350536-6 or 350550-6 (No. 1 to 4) 350570-3 or 350689-3 (No. 5 and 6) Soldered type

(b) Connector Pin Arrangement

Pin No.	Signal	Lead Color	Remarks
1	Phase U	Red	–
2	Phase V	White	–
3	Phase W	Blue	–
4	FG	Green/Yellow	–
5	Brake terminal	Black	No polarity
6	Brake terminal	Black	

5.2.3 SGMGH, SGMSH, SGMDH, and SGMUH Servomotor Connector Configurations

The SGMGH, SGMSH, SGMDH, and SGMUH servomotor connector configurations are shown below.

The connectors conforming to IP67 and the European Safety Standards are not available for SGMAH and SGMPH servomotors.

Select and prepare the proper plug and cable clamp.

① Configurations of Standard Environment Connectors

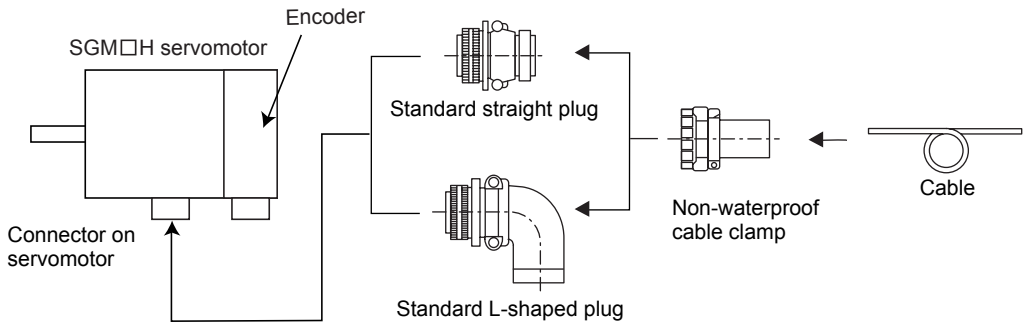

② Configurations of Connectors Conforming to IP67 and the European Safety Standards

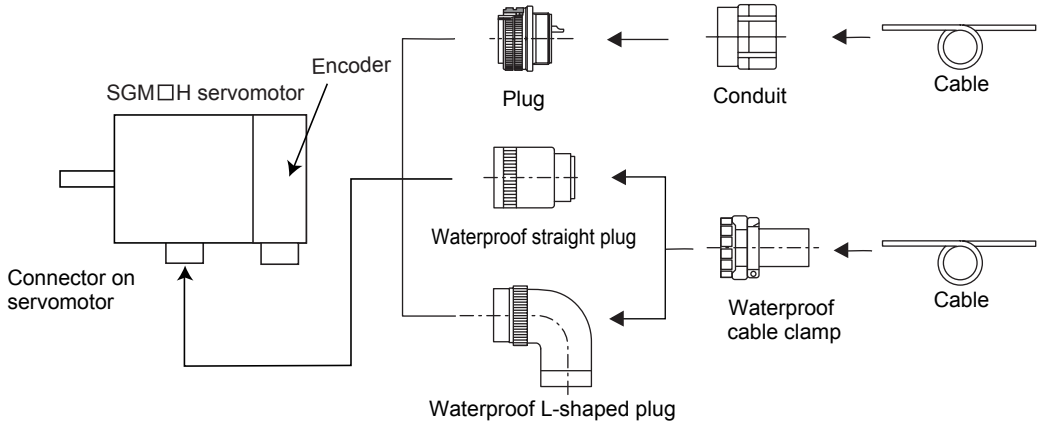

- Connector Manufacturers

Contact Yaskawa Controls Co., Ltd.

Connector	Type	Manufacturer
Plug	JL□□ (JA□□) CE□□	Japan Aviation Electronics Industry, Ltd.
Cable clamp		DDK Electronics, Inc.
Conduit	Nippon Flex Co., Ltd.	

5.2.4 SGMGH Servomotor (1500 min^{-1}) Connectors for Standard Environments

(1) 200 V and 400 V Servomotors Without Holding Brakes

The specifications are same for both three-phase 200 V and 400 V servomotors.

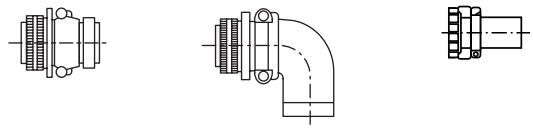

Capacity (kW)	Connector on Servomotor	Plug		Cable Clamp
		Straight	L-shaped	
0.45 0.85 1.3	MS3102A18-10P	MS3106B18-10S	MS3108B18-10S	MS3057-10A
1.8 2.9 4.4	MS3102A22-22P	MS3106B22-22S	MS3108B22-22S	MS3057-12A
5.5 7.5 11.0 15.0	MS3102A32-17P	MS3106B32-17S	MS3108B32-17S	MS3057-20A

(2) 200 V and 400 V Servomotors With Holding Brakes

The three-phase 200 V 5.5 to 15.0 kW and three-phase 400 V 0.45 to 15.0 kW servomotors require (a) servomotor-end connector and (b) brake power supply connector.

(a) Servomotor-end Connectors

i) 200 V Servomotors

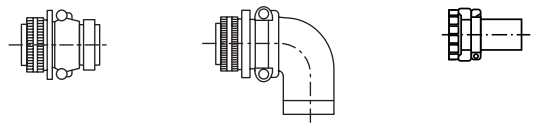

Capacity (kW)	Connector on Servomotor	Plug		Cable Clamp
		Straight	L-shaped	
0.45 0.85 1.3	MS3102A20-15P	MS3106B20-15S	MS3108B20-15S	MS3057-12A
1.8 2.9 4.4	MS3102A24-10P	MS3106B24-10S	MS3108B24-10S	MS3057-16A
5.5 7.5 11.0 15.0	MS3102A32-17P	MS3106B32-17S	MS3108B32-17S	MS3057-20A

ii) 400 V Servomotors

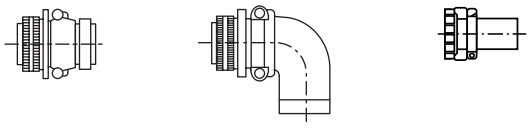

Capacity (kW)	Connector on Servomotor	Plug		Cable Clamp
		Straight	L-shaped	
0.45 0.85 1.3	MS3102A18-10P	MS3106B18-10S	MS3108B18-10S	MS3057-10A
1.8 2.9 4.4	MS3102A22-22P	MS3106B22-22S	MS3108B22-22S	MS3057-12A
5.5 7.5 11.0 15.0	MS3102A32-17P	MS3106B32-17S	MS3108B32-17S	MS3057-20A

(b) Brake Power Supply Connectors

- Three-phase 200 V 5.5 to 15.0 kW
- Three-phase 400 V 0.45 to 15.0 kW

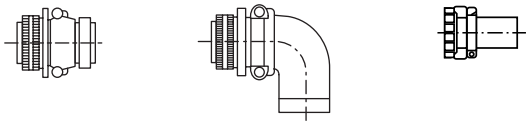

Capacity (kW)		Connector on Servomotor	Plug		Cable Clamp
Three-phase 200 V	Three-phase 400 V		Straight	L-shaped	
5.5 7.5 11.0 15.0	0.45 0.85 1.3 1.8 2.9 4.4 5.5 7.5 11.0 15.0	MS3102A10SL-3P	MS3106A10SL-3S	MS3108A10SL-3L	MS3057-4A

(3) SGMGH Servomotors (1500 min^{-1}) Main Circuit Connector Pin Arrangement

(a) Without Holding Brakes

Three-phase 200 V and 400 V 0.45 to 15.0 kW

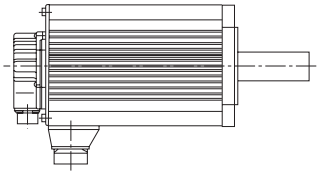

Servomotor Connector Pin Arrangement

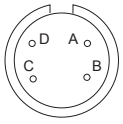

Pin No.	Signal
A	Phase U
B	Phase V
C	Phase W
D	FG (Frame Ground)

(b) With Holding Brakes

① Three-phase 200 V 0.45 to 4.4 kW

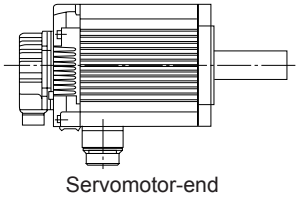

Servomotor Connector Pin Arrangement

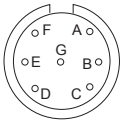

Pin No.	Signal	Pin No.	Signal
A	Phase U	E *	Brake terminal
B	Phase V	F *	Brake terminal
C	Phase W	G	—
D	FG (Frame Ground)	* No polarity	

② Three-phase 200 V 5.5 to 15.0 kW
Three-phase 400 V 0.45 to 15.0 kW

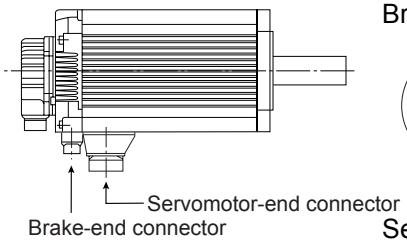

Brake Connector Pin Arrangement

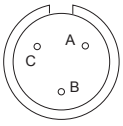

Pin No.	Signal
A *	Brake terminal
B *	Brake terminal
C	—

* No polarity

Servomotor Connector Pin Arrangement

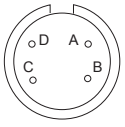

Pin No.	Signal
A	Phase U
B	Phase V
C	Phase W
D	FG (Frame Ground)

5.2.5 SGMGH Servomotor (1000 min^{-1}) Connectors for Standard Environments

(1) 200 V Servomotors Without Holding Brakes

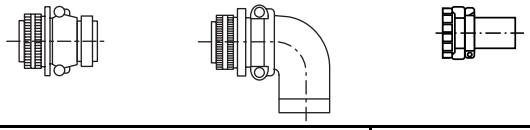

Capacity (kW)	Connector on Servomotor	Plug		Cable Clamp
		Straight	L-shaped	
0.3 0.6 0.9	MS3102A18-10P	MS3106B18-10S	MS3108B18-10S	MS3057-10A
1.2 2.0 3.0	MS3102A22-22P	MS3106B22-22S	MS3108B22-22S	MS3057-12A
4.0 5.5	MS3102A32-17P	MS3106B32-17S	MS3108B32-17S	MS3057-20A

(2) 200 V Servomotors With Holding Brakes

4.0 kW and 5.5 kW servomotors require (a) servomotor-end connector and (b) brake power supply connector.

(a) Servomotor-end Connectors

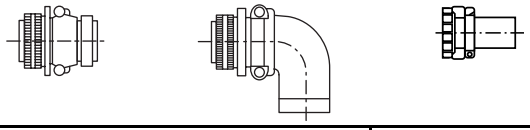

Capacity (kW)	Connector on Servomotor	Plug		Cable Clamp
		Straight	L-shaped	
0.3 0.6 0.9	MS3102A20-15P	MS3106B20-15S	MS3108B20-15S	MS3057-12A
1.2 2.0 3.0	MS3102A24-10P	MS3106B24-10S	MS3108B24-10S	MS3057-16A
4.0 5.5	MS3102A32-17P	MS3106B32-17S	MS3108B32-17S	MS3057-20A

(b) Brake Power Supply Connectors

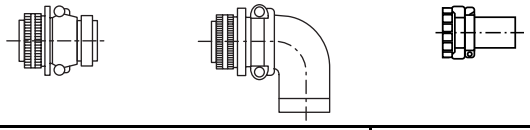

Capacity (kW)	Connector on Servomotor	Plug		Cable Clamp
		Straight	L-shaped	
4.0 5.5	MS3102A10SL-3P	MS3106A10SL-3S	MS3108A10SL-3S	MS3057-4A

(3) SGMGH (1000 min^{-1}) Servomotor Main Circuit Connector Pin Arrangement

(a) Without Holding Brakes

Three-phase 200 V 0.3 to 5.5 kW

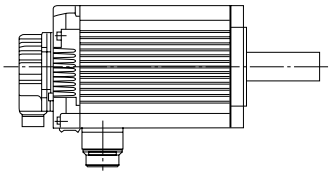

Servomotor Connector Pin Arrangement

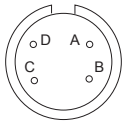

Pin No.	Signal
A	Phase U
B	Phase V
C	Phase W
D	FG (Frame Ground)

(b) With Holding Brakes

① Three-phase 200 V 0.3 to 3.0 kW

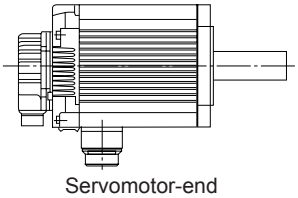

Servomotor Connector Pin Arrangement

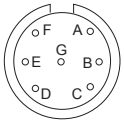

Pin No.	Signal	Pin No.	Signal
A	Phase U	E *	Brake terminal
B	Phase V	F *	Brake terminal
C	Phase W	G	—
D	FG (Frame Ground)	* No polarity	

② Three-phase 200 V 4.0 kW and 5.5 kW

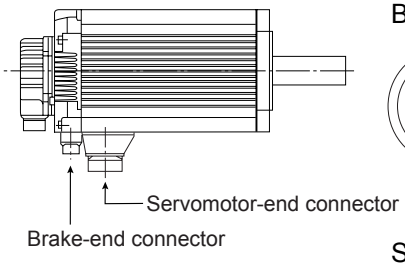

Brake Connector Pin Arrangement

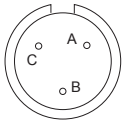

Pin No.	Signal
A *	Brake terminal
B *	Brake terminal
C	—

* No polarity

Servomotor Connector Pin Arrangement

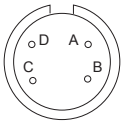

Pin No.	Signal
A	Phase U
B	Phase V
C	Phase W
D	FG (Frame Ground)

5.2.6 SGMSH Servomotor (3000 min^{-1}) Connectors for Standard Environments

(1) 200 V and 400 V Servomotors Without Holding Brakes

The specifications are same for both three-phase 200 V and 400 V servomotors.

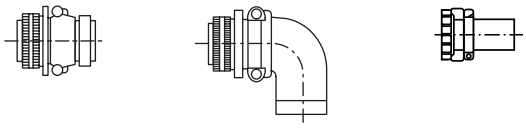

Capacity (kW)	Connector on Servomotor	Plug		Cable Clamp
		Straight	L-shaped	
1.0 1.5 2.0	MS3102A18-10P	MS3106B18-10S	MS3108B18-10S	MS3057-10A
3.0 4.0 5.0	MS3102A22-22P	MS3106B22-22S	MS3108B22-22S	MS3057-12A

(2) 200 V and 400 V Servomotors With Holding Brakes

The three-phase 400 V 1.0 to 5.0 kW servomotors require (a) servomotor-end connector and (b) brake power supply connector.

(a) Servomotor-end Connectors

i) 200 V Servomotors

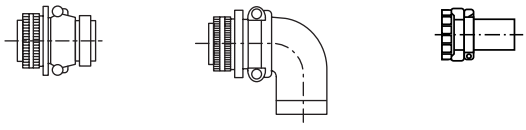

Capacity (kW)	Connector on Servomotor	Plug		Cable Clamp
		Straight	L-shaped	
1.0 1.5 2.0	MS3102A20-15P	MS3106B20-15S	MS3108B20-15S	MS3057-12A
3.0 4.0 5.0	MS3102A24-10P	MS3106B24-10S	MS3108B24-10S	MS3057-16A

ii) 400 V Servomotors

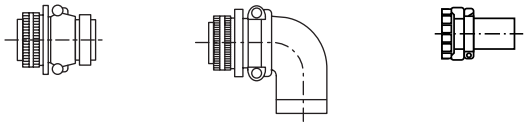

Capacity (kW)	Connector on Servomotor	Plug		Cable Clamp
		Straight	L-shaped	
1.0 1.5 2.0	MS3102A18-10P	MS3106B18-10S	MS3108B18-10S	MS3057-10A
3.0 4.0 5.0	MS3102A22-22P	MS3106B22-22S	MS3108B22-22S	MS3057-12A

(b) Brake Power Supply Connectors

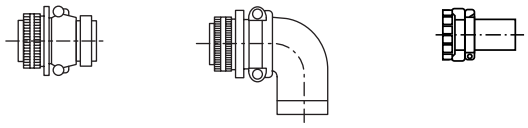

Capacity (kW)	Connector on Servomotor	Plug		Cable Clamp
		Straight	L-shaped	
1.0 1.5 2.0 3.0 4.0 5.0	MS3102A10SL-3P	MS3106A10SL-3S	MS3108A10SL-3S	MS3057-4A

(3) SGMSH (3000 min^{-1}) Servomotor Main Circuit Connector Pin Arrangement

(a) Without Brakes

Three-phase 200 V and 400 V 1.0 to 5.0 kW

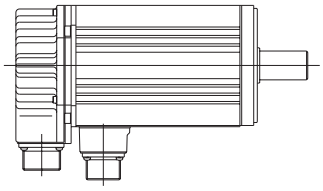

Servomotor Connector Pin Arrangement

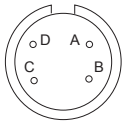

Pin No.	Signal
A	Phase U
B	Phase V
C	Phase W
D	FG (Frame Ground)

(b) With Brakes

① Three-phase 200 V 1.0 to 5.0 kW

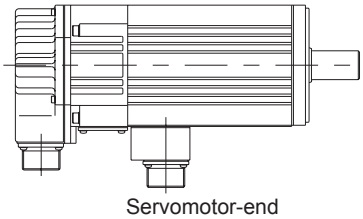

Servomotor Connector Pin Arrangement

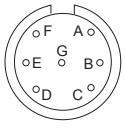

Pin No.	Signal	Pin No.	Signal
A	Phase U	E *	Brake terminal
B	Phase V	F *	Brake terminal
C	Phase W	G	—
D	FG (Frame Ground)	* No polarity	

② Three-phase 400 V 1.0 to 5.0 kW

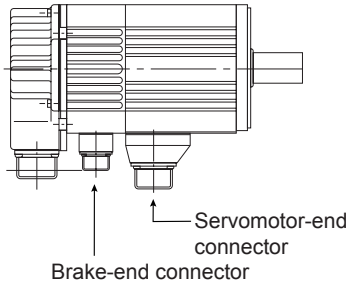

Brake Connector Pin Arrangement

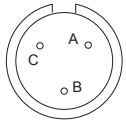

Pin No.	Signal
A *	Brake terminal
B *	Brake terminal
C	—

* No polarity

Servomotor Connector Pin Arrangement

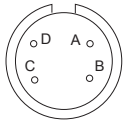

Pin No.	Signal
A	Phase U
B	Phase V
C	Phase W
D	FG (Frame Ground)

5.2.7 SGMDH Servomotor (2000 min^{-1}) Connectors for Standard Environments

(1) 200 V Servomotors With and Without Holding Brakes

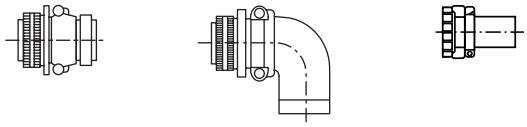

Capacity (kW)	Connector on Servomotor	Plug		Cable Clamp
		Straight	L-shaped	
2.2 3.2 4.0	MS3102A24-10P	MS3106B24-10S	MS3108B24-10S	MS3057-16A

(2) Servomotor Main Circuit Connector Pin Arrangement

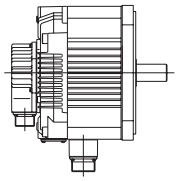

Servomotor-end connector

- Without Brakes

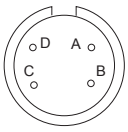

Pin No.	Signal
A	Phase U
B	Phase V
C	Phase W
D	FG (Frame Ground)

- With Brakes

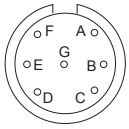

Pin No.	Signal	Pin No.	Signal
A	Phase U	E *	Brake terminal
B	Phase V	F *	Brake terminal
C	Phase W	G	—
D	FG (Frame Ground)	* No polarity	

5.2.8 SGMUH Servomotor (6000 min^{-1}) Connectors for Standard Environments

(1) 400 V Servomotors Without Holding Brakes

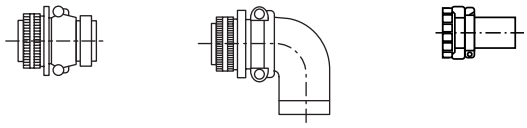

Capacity (kW)	Connector on Servomotor	Plug		Cable Clamp
		Straight	L-shaped	
1.0 1.5	MS3102A18-10P	MS3106B18-10S	MS3108B18-10S	MS3057-10A
3.0 4.0	MS3102A22-22P	MS3106B22-22S	MS3108B22-22S	MS3057-12A

(2) 400 V Servomotors With Holding Brakes

The three-phase 400 V 1.0 to 4.0 kW servomotors require (a) servomotor-end connector and (b) brake power supply connector.

(a) Servomotor-end Connectors

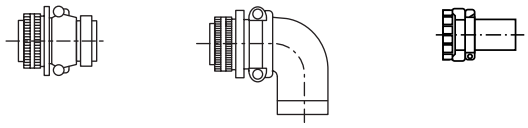

Capacity (kW)	Connector on Servomotor	Plug		Cable Clamp
		Straight	L-shaped	
1.0 1.5	MS3102A18-10P	MS3106B18-10S	MS3108B18-10S	MS3057-10A
3.0 4.0	MS3102A22-22P	MS3106B22-22S	MS3108B22-22S	MS3057-12A

(b) Brake Power Supply Connectors

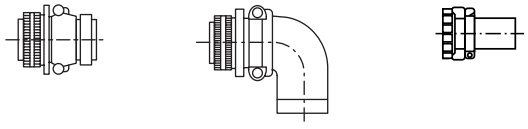

Capacity (kW)	Connector on Servomotor	Plug		Cable Clamp
		Straight	L-shaped	
1.0 1.5 3.0 4.0	MS3102A10SL-3P	MS3106A10SL-3S	MS3108A10SL-3S	MS3057-4A

(3) Servomotor Main Circuit Connector Pin Arrangement

(a) Without Brakes

Three-phase 400 V 1.0 to 4.0 kW

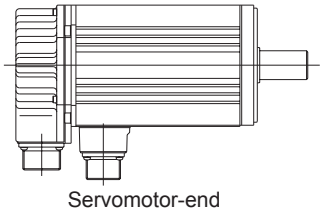

Servomotor-end connector

Servomotor Connector Pin Arrangement

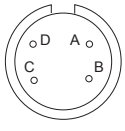

Pin No.	Signal
A	Phase U
B	Phase V
C	Phase W
D	FG (Frame Ground)

(b) With Brakes

Three-phase 400 V 1.0 to 4.0 kW

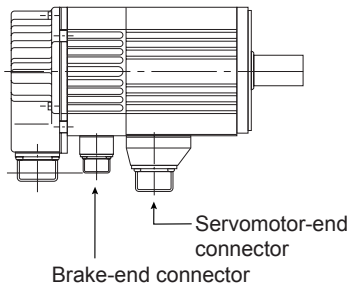

Brake Connector Pin Arrangement

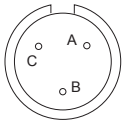

Pin No.	Signal
A *	Brake terminal
B *	Brake terminal
C	—

* No polarity

Servomotor Connector Pin Arrangement

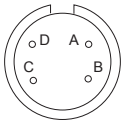

Pin No.	Signal
A	Phase U
B	Phase V
C	Phase W
D	FG (Frame Ground)

5

5.2.9 SGMGH Servomotor (1500 min^{-1}) Connectors Conforming to IP67 and European Safety Standards

(1) 200 V and 400 V 0.45 to 4.4 kW Servomotors Without Holding Brakes

The specifications are same for both three-phase 200 V and 400 V servomotors.

Select a cable clamp in accordance with the applied cable diameter.

INFO

The straight plug type JA06A-22-22S-J1-EB and L-shaped plug type JA08A-22-22S-J1-EB conform to the IP67 Protective Construction Standard only.

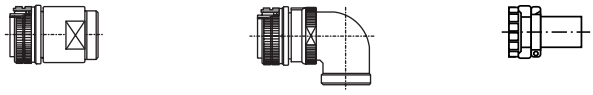

Capacity (kW)	Connector on Servomotor	Plug		Cable Clamp	Applicable Cable Range in mm (in) (For reference)
		Straight	L-shaped		
0.45 0.85 1.3	CE05-2A18-10PD-B	CE05-6A18-10SD-B-BSS	CE05-8A18-10SD-B-BAS	CE3057-10A-1	ϕ10.5 (ϕ0.41) to ϕ14.1 (ϕ0.56)
				CE3057-10A-2	ϕ 8.5 (ϕ0.33) to ϕ11.0 (ϕ0.43)
				CE3057-10A-3	ϕ 6.5 (ϕ0.26) to ϕ 8.7 (ϕ0.34)
1.8 2.9 4.4	JL04HV-2E22-22PE-B	JL04V-6A22-22SE-EB or JA06A-22-22S-J1-EB	JL04V-8A22-22SE-EB or JA08A-22-22S-J1-EB	JL04-2022CK(09)	ϕ 6.5 (ϕ0.26) to ϕ 9.5 (ϕ0.37)
				JL04-2022CK(12)	ϕ 9.5 (ϕ0.37) to ϕ13.0 (ϕ0.51)
				JL04-2022CK(14)	ϕ12.9 (ϕ0.51) to ϕ15.9 (ϕ0.63)

(2) 200 V and 400 V 5.5 to 15.0 kW Servomotors Without Holding Brakes

Select a conduit in accordance with the applied cable diameter.

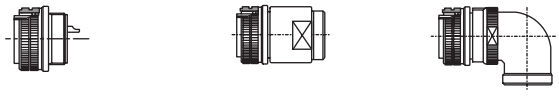

Capacity (kW)	Connector on Servomotor	Plug	Conduit		Applicable Cable Range in mm (in) (For reference)
			Straight	L-shaped	
5.5 7.5 11.0 15.0	JL04V-2E32-17PE-B	JL04V-6A32-17SE	ACS-16RL-MS32F	ACA-16RL-MS32F	ϕ12.0 (ϕ0.47) to ϕ16.0 (ϕ0.63)
			ACS-20RL-MS32F	ACA-20RL-MS32F	ϕ16.0 (ϕ0.63) to ϕ20.0 (ϕ0.79)
			ACS-24RL-MS32F	ACA-24RL-MS32F	ϕ20.0 (ϕ0.79) to ϕ24.0 (ϕ0.94)
			ACS-28RL-MS32F	ACA-28RL-MS32F	ϕ24.0 (ϕ0.94) to ϕ28.0 (ϕ1.10)
			ACS-32RL-MS32F	ACA-32RL-MS32F	ϕ28.0 (ϕ1.10) to ϕ32.0 (ϕ1.26)
			ACS-36RL-MS32F	ACA-36RL-MS32F	ϕ32.0 (ϕ1.26) to ϕ36.0 (ϕ1.42)

(3) 200 V and 400 V Servomotors With Holding Brakes

The three-phase 200 V 5.5 to 15.0 kW and three-phase 400 V 0.45 to 15.0 kW servomotors require (a) servomotor-end connector and (b) brake power supply connector.

INFO

The straight plug type JA06A-24-10S-J1-EB and L-shaped plug type JA08A-24-10S-J1-EB conform to IP67 Protective Construction Standard only.

(a) Servomotor-end Connector

i) 200 V 0.45 to 4.4 kW

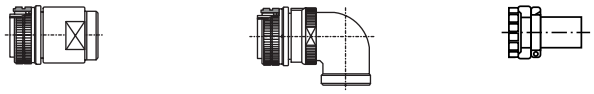

Capacity (kW)	Connector on Servomotor	Plug		Cable Clamp	Applicable Cable Range in mm (in) (For reference)
		Straight	L-shaped		
0.45 0.85 1.3	JL04V-2E20-15PE-B	JL04V-6A20-15SE-EB	JL04V-8A20-15SE-EB	JL04-2022CK(09)	ϕ6.5 (ϕ0.26) to ϕ9.5 (ϕ0.37)
				JL04-2022CK(12)	ϕ9.5 (ϕ0.37) to ϕ13.0 (ϕ0.51)
				JL04-2022CK(14)	ϕ12.9 (ϕ0.51) to ϕ15.9 (ϕ0.63)
1.8 2.9 4.4	JL04V-2E24-10PE-B	JL04V-6A24-10SE-EB or JA06A-24-10S-J1-EB	JL04V-8A24-10SE-EB or JA08A-24-10S-J1-EB	JL04-2428CK(11)	ϕ9.0 (ϕ0.35) to ϕ12.0 (ϕ0.47)
				JL04-2428CK(14)	ϕ12.0 (ϕ0.47) to ϕ15.0 (ϕ0.59)
				JL04-2428CK(17)	ϕ15.0 (ϕ0.59) to ϕ18.0 (ϕ0.71)
				JL04-2428CK(20)	ϕ18.0 (ϕ0.71) to ϕ20.0 (ϕ0.79)

ii) 400 V 0.45 to 4.4 kW

INFO

The straight plug type JA06A-22-22S-J1-EB and L-shaped plug type JA08A-22-22S-J1-EB conform to the IP67 Protective Construction Standard only.

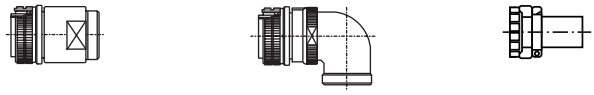

Capacity (kW)	Connector on Servomotor	Plug		Cable Clamp	Applicable Cable Range in mm (in) (For reference)
		Straight	L-shaped		
0.45 0.85 1.3	CE05-2A18-10PD-B	CE05-6A18-10SD-B-BSS	CE05-8A18-10SD-B-BAS	CE3057-10A-1	ϕ10.5 (ϕ0.41) to ϕ14.1 (ϕ0.56)
				CE3057-10A-2	ϕ 8.5 (ϕ0.33) to ϕ11.0 (ϕ0.43)
				CE3057-10A-3	ϕ 6.5 (ϕ0.26) to ϕ 8.7 (ϕ0.34)
1.8 2.9 4.4	JL04HV-2E22-22PE-B	JL04V-6A22-22SE-EB or JA06A-22-22S-J1-EB	JL04V-8A22-22SE-EB or JA08A-22-22S-J1-EB	JL04-2022CK(09)	ϕ 6.5 (ϕ0.26) to ϕ 9.5 (ϕ0.37)
				JL04-2022CK(12)	ϕ 9.5 (ϕ0.37) to ϕ13.0 (ϕ0.51)
				JL04-2022CK(14)	ϕ12.9 (ϕ0.51) to ϕ15.9 (ϕ0.63)

iii) 200 V and 400 V Servomotors 5.5 to 15.0 kW

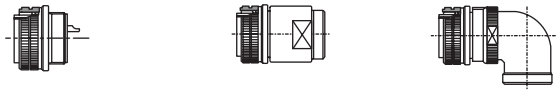

Capacity (kW)	Connector on Servomotor	Plug	Conduit		Applicable Cable Range in mm (in) (For reference)
			Straight	L-shaped	
5.5 7.5 11.0 15.0	JL04V-2E32-17PE-B	JL04V-6A32-17SE	ACS-16RL-MS32F	ACA-16RL-MS32F	ϕ12.0 (ϕ0.47) to ϕ16.0 (ϕ0.63)
			ACS-20RL-MS32F	ACA-20RL-MS32F	ϕ16.0 (ϕ0.63) to ϕ20.0 (ϕ0.79)
			ACS-24RL-MS32F	ACA-24RL-MS32F	ϕ20.0 (ϕ0.79) to ϕ24.0 (ϕ0.94)
			ACS-28RL-MS32F	ACA-28RL-MS32F	ϕ24.0 (ϕ0.94) to ϕ28.0 (ϕ1.10)
			ACS-32RL-MS32F	ACA-32RL-MS32F	ϕ28.0 (ϕ1.10) to ϕ32.0 (ϕ1.26)
			ACS-36RL-MS32F	ACA-36RL-MS32F	ϕ32.0 (ϕ1.26) to ϕ36.0 (ϕ1.42)

(b) Brake Power Supply Connectors

The specifications are same for both three-phase 200 V and 400 V servomotors.

Connectors for the brake power supply for 200 V 0.45 kW to 4.4 kW servomotors are not available, because the connectors for the main circuit can be used for this purpose.

- Three-phase 200 V 5.5 to 15.0 kW
- Three-phase 400 V 0.45 to 15.0 kW

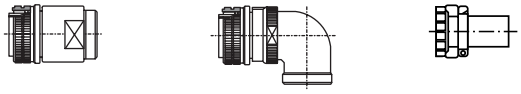

Capacity (kW)		Connector on Servomotor	Plug		Cable Clamp	Applicable Cable Range in mm (in) (For reference)
Three-phase 200 V	Three-phase 400 V		Straight	L-shaped		
5.5 7.5 11.0 15.0	0.45 0.85 1.3 1.8 2.9 4.4 5.5 7.5 11.0 15.0	CE05-2A10SL-3PC-B	CE05-6A10SL-3SC-B-BSS	CE05-8A10SL-3SC-B-BAS	CE3057-4A-1	ϕ 3.6 (ϕ0.14) to ϕ5.6 (ϕ0.22)

5

(4) Servomotor Main Circuit Connector Pin Arrangement

(a) Servomotors Without Holding Brakes

Three-phase 200 V and 400 V 0.45 to 15.0 kW

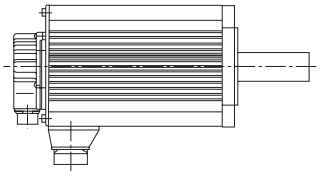

Servomotor Connector Pin Arrangement

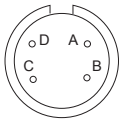

Pin No.	Signal
A	Phase U
B	Phase V
C	Phase W
D	FG (Frame Ground)

(b) Servomotors With Holding Brakes

① Three-phase 200 V 0.45 to 4.4 kW

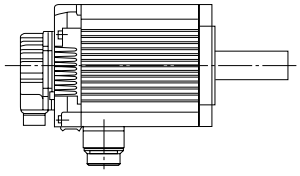

Servomotor Connector Pin Arrangement

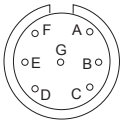

Pin No.	Signal	Pin No.	Signal
A	Phase U	E *	Brake terminal
B	Phase V	F *	Brake terminal
C	Phase W	G	—
D	FG (Frame Ground)	* No polarity	

② Three-phase 200 V 5.5 to 15.0 kW
Three-phase 400 V 0.45 to 15.0 kW

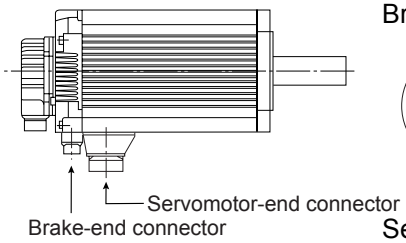

Brake Connector Pin Arrangement

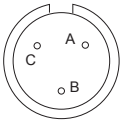

Pin No.	Signal
A *	Brake terminal
B *	Brake terminal
C	—

* No polarity

Servomotor Connector Pin Arrangement

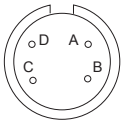

Pin No.	Signal
A	Phase U
B	Phase V
C	Phase W
D	FG (Frame Ground)

5.2.10 SGMGH Servomotor (1000 min^{-1}) Connectors Conforming to IP67 and European Safety Standards

(1) 200 V Servomotors Without Holding Brakes

(a) For 0.3 to 3.0 kW Servomotors

Select a cable clamp in accordance with the applied cable diameter.

INFO

The straight plug type JA06A-22-22S-J1-EB and L-shaped plug type JA08A-22-22S-J1-EB conform to IP67 Protective Construction Standard only.

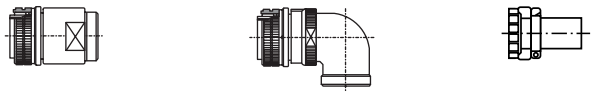

Capacity (kW)	Connector on Servomotor	Plug		Cable Clamp	Applicable Cable Range in mm (in) (For reference)
		Straight	L-shaped		
0.3 0.6 0.9	CE05-2A18-10PD-B	CE05-6A18-10SD-B-BSS	CE05-8A18-10SD-B-BAS	CE3057-10A-1	ϕ10.5 (ϕ0.41) to ϕ14.1 (ϕ0.56)
				CE3057-10A-2	ϕ 8.5 (ϕ0.33) to ϕ11.0 (ϕ0.43)
				CE3057-10A-3	ϕ 6.5 (ϕ0.26) to ϕ 8.7 (ϕ0.34)
1.2 2.0 3.0	JL04HV-2E22-22PE-B	JL04V-6A22-22SE-EB or JA06A-22-22S-J1-EB	JL04V-8A22-22SE-EB or JA08A-22-22S-J1-EB	JL04-2022CK(09)	ϕ 6.5 (ϕ0.26) to ϕ 9.5 (ϕ0.37)
				JL04-2022CK(12)	ϕ 9.5 (ϕ0.37) to ϕ13.0 (ϕ0.51)
				JL04-2022CK(14)	ϕ12.9 (ϕ0.51) to ϕ15.9 (ϕ0.63)

(b) For 4.0 kW and 5.5 kW Servomotors

Select a conduit in accordance with the applied cable diameter.

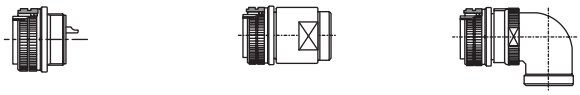

Capacity (kW)	Connector on Servomotor	Plug	Conduit		Applicable Cable Range in mm (in) (For reference)
			Straight	L-shaped	
4.0 5.5	JL04V-2E32-17PE-B	JL04V-6A32-17SE	ACS-16RL-MS32F	ACA-16RL-MS32F	ϕ12.0 (ϕ0.47) to ϕ16.0 (ϕ0.63)
			ACS-20RL-MS32F	ACA-20RL-MS32F	ϕ16.0 (ϕ0.63) to ϕ20.0 (ϕ0.79)
			ACS-24RL-MS32F	ACA-24RL-MS32F	ϕ20.0 (ϕ0.79) to ϕ24.0 (ϕ0.94)
			ACS-28RL-MS32F	ACA-28RL-MS32F	ϕ24.0 (ϕ0.94) to ϕ28.0 (ϕ1.10)
			ACS-32RL-MS32F	ACA-32RL-MS32F	ϕ28.0 (ϕ1.10) to ϕ32.0 (ϕ1.26)
			ACS-36RL-MS32F	ACA-36RL-MS32F	ϕ32.0 (ϕ1.26) to ϕ36.0 (ϕ1.42)

(2) 200 V 0.3 to 3.0 kW Servomotors With Holding Brakes

Select a cable clamp in accordance with the applied cable diameter.

INFO

The straight plug type JA06A-24-10S-J1-EB and L-shaped plug type JA08A-24-10S-J1-EB conform to IP67 Protective Construction Standard only.

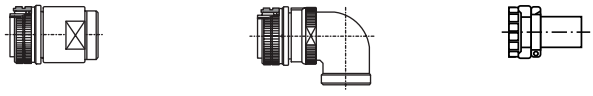

Capacity (kW)	Connector on Servomotor	Plug		Cable Clamp	Applicable Cable Range in mm (in) (For reference)
		Straight	L-shaped		
0.3 0.6 0.9	JL04V-2E20-15PE-B	JL04V-6A20-15SE-EB	JL04V-8A20-15SE-EB	JL04-2022CK(09)	ϕ 6.5 (ϕ0.26) to ϕ 9.5 (ϕ0.37)
				JL04-2022CK(12)	ϕ 9.5 (ϕ0.37) to ϕ13.0 (ϕ0.51)
				JL04-2022CK(14)	ϕ12.9 (ϕ0.51) to ϕ15.9 (ϕ0.63)
1.2 2.0 3.0	JL04V-2E24-10PE-B	JL04V-6A24-10SE-EB or JA06A-24-10S-J1-EB	JL04V-8A24-10SE-EB or JA08A-24-10S-J1-EB	JL04-2428CK(11)	ϕ9.0 (ϕ0.35) to ϕ12.0 (ϕ0.47)
				JL04-2428CK(14)	ϕ12.0 (ϕ0.47) to ϕ15.0 (ϕ0.59)
				JL04-2428CK(17)	ϕ15.0 (ϕ0.59) to ϕ18.0 (ϕ0.71)
				JL04-2428CK(20)	ϕ18.0 (ϕ0.71) to ϕ20.0 (ϕ0.79)

(3) 200 V 4.0 kW and 5.5 kW Servomotors With Holding Brakes

The servomotor end connector (a) and brake power supply connector (b) are required.

Select a conduit in accordance with the applied cable diameter.

(a) Servomotor-end Connector

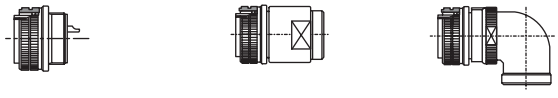

Capacity (kW)	Connector on Servomotor	Plug	Conduit		Applicable Cable Range in mm (in) (For reference)
			Straight	L-shaped	
4.0 5.5	JL04V-2E32-17PE-B	JL04V-6A32-17SE	ACS-16RL-MS32F	ACA-16RL-MS32F	ϕ12.0 (ϕ0.47) to ϕ16.0 (ϕ0.63)
			ACS-20RL-MS32F	ACA-20RL-MS32F	ϕ16.0 (ϕ0.63) to ϕ20.0 (ϕ0.79)
			ACS-24RL-MS32F	ACA-24RL-MS32F	ϕ20.0 (ϕ0.79) to ϕ24.0 (ϕ0.94)
			ACS-28RL-MS32F	ACA-28RL-MS32F	ϕ24.0 (ϕ0.94) to ϕ28.0 (ϕ1.10)
			ACS-32RL-MS32F	ACA-32RL-MS32F	ϕ28.0 (ϕ1.10) to ϕ32.0 (ϕ1.26)
			ACS-36RL-MS32F	ACA-36RL-MS32F	ϕ32.0 (ϕ1.26) to ϕ36.0 (ϕ1.42)

(b) Brake Power Supply Connector

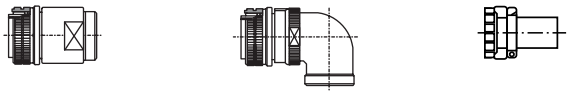

Capacity (kW)	Connector on Servomotor	Plug		Cable Clamp	Applicable Cable Range in mm (in) (For reference)
		Straight	L-shaped		
4.0 5.5	CE05-2A10SL-3PC-B	CE05-6A10SL-3SC-B-BSS	CE05-8A10SL-3SC-B-BAS	CE3057-4A-1	ϕ 3.6 (ϕ0.14) to ϕ 5.6 (ϕ0.22)

(4) Servomotor Main Circuit Connector Pin Arrangement

(a) Servomotors Without Holding Brakes

Three-phase 200 V 0.3 to 5.5 kW

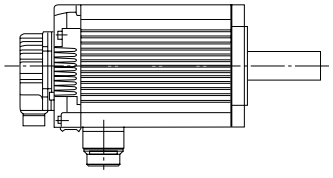

Servomotor Connector Pin Arrangement

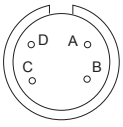

Pin No.	Signal
A	Phase U
B	Phase V
C	Phase W
D	FG (Frame Ground)

(b) Servomotors With Holding Brakes

① Three-phase 200 V 0.3 to 3.0 kW

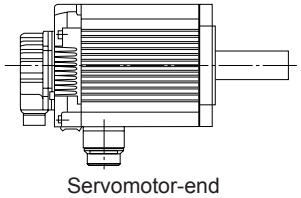

Servomotor Connector Pin Arrangement

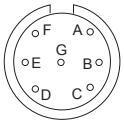

Pin No.	Signal	Pin No.	Signal
A	Phase U	E *	Brake terminal
B	Phase V	F *	Brake terminal
C	Phase W	G	—
D	FG (Frame Ground)	* No polarity	

② Three-phase 200 V 4.0 kW and 5.5 kW

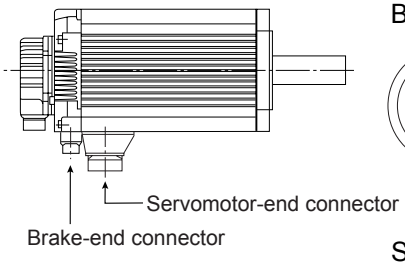

Brake Connector Pin Arrangement

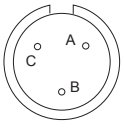

Pin No.	Signal
A *	Brake terminal
B *	Brake terminal
C	—

* No polarity

Servomotor Connector Pin Arrangement

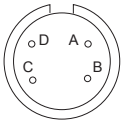

Pin No.	Signal
A	Phase U
B	Phase V
C	Phase W
D	FG (Frame Ground)

5.2.11 SGMSH Servomotors (3000 min^{-1}) Connectors Conforming to IP67 and European Safety Standards

(1) 200 V and 400 V Servomotors Without Holding Brakes

The specifications are same for both three-phase 200 V and 400 V servomotors.
Select a cable clamp in accordance with the applied cable diameter.

INFO

The straight plug type JA06A-22-22S-J1-EB and L-shaped plug type JA08A-22-22S-J1-EB conform to IP67 Protective Construction Standard only.

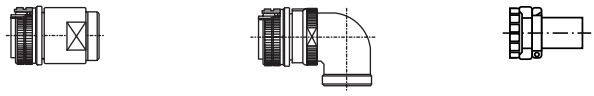

Capacity (kW)	Connector on Servomotor	Plug		Cable Clamp	Applicable Cable Range in mm (in) (For reference)
		Straight	L-shaped		
1.0 1.5 2.0	CE05-2A18-10PD-B	CE05-6A18-10SD-B-BSS	CE05-8A18-10SD-B-BAS	CE3057-10A-1	ϕ10.5 (ϕ0.41) to ϕ14.1 (ϕ0.56)
				CE3057-10A-2	ϕ 8.5 (ϕ0.33) to ϕ11.0 (ϕ0.43)
				CE3057-10A-3	ϕ 6.5 (ϕ0.26) to ϕ 8.7 (ϕ0.34)
3.0 4.0 5.0	JL04HV-2E22-22PE-B	JL04V-6A22-22SE-EB or JA06A-22-22S-J1-EB	JL04V-8A22-22SE-EB or JA08A-22-22S-J1-EB	JL04-2022CK(09)	ϕ 6.5 (ϕ0.26) to ϕ 9.5 (ϕ0.37)
				JL04-2022CK(12)	ϕ 9.5 (ϕ0.37) to ϕ13.0 (ϕ0.51)
				JL04-2022CK(14)	ϕ12.9 (ϕ0.51) to ϕ15.9 (ϕ0.63)

(2) 200 V Servomotors With Holding Brakes

Select a cable clamp in accordance with the applied cable diameter.

INFO

The straight plug type JA06A-24-10S-J1-EB and L-shaped plug type JA08A-24-10S-J1-EB conform to IP67 Protective Construction Standard only.

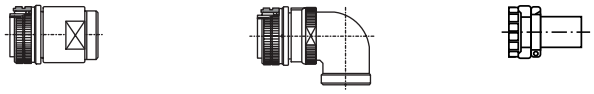

Capacity (kW)	Connector on Servomotor	Plug		Cable Clamp	Applicable Cable Range in mm (in) (For reference)
		Straight	L-shaped		
1.0 1.5 2.0	JL04V-2E20-15PE-B	JL04V-6A20-15SE-EB	JL04V-8A20-15SE-EB	JL04-2022CK(09)	ϕ 6.5 (ϕ0.26) to ϕ 9.5 (ϕ0.37)
				JL04-2022CK(12)	ϕ 9.5 (ϕ0.37) to ϕ13.0 (ϕ0.51)
				JL04-2022CK(14)	ϕ12.9 (ϕ0.51) to ϕ15.9 ϕ0.63)
3.0 4.0 5.0	JL04V-2E24-10PE-B	JL04V-6A24-10SE-EB or JA06A-24-10S-J1-EB	JL04V-8A24-10SE-EB or JA08A-24-10S-J1-EB	JL04-2428CK(11)	ϕ 9.0 (0.35) to ϕ12.0 (0.47)
				JL04-2428CK(14)	ϕ12.0 (ϕ0.47) to ϕ15.0 (ϕ0.59)
				JL04-2428CK(17)	ϕ15.0 (ϕ0.59) to ϕ18.0 (ϕ0.71)
				JL04-2428CK(20)	ϕ18.0 (ϕ0.71) to ϕ20.0 (ϕ0.79)

(3) 400 V Servomotors With Holding Brakes

The servomotor-end connector (a) and brake power supply connector (b) are required.
Select a conduit in accordance with the applied cable diameter.

INFO

The straight plug type JA06A-22-22S-J1-EB and L-shaped plug type JA08A-22-22S-J1-EB conform to IP67 Protective Construction Standard only.

(a) Servomotor-end Connector

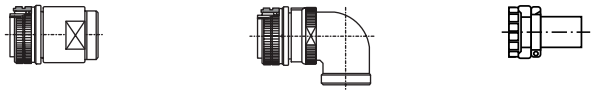

Capacity (kW)	Connector on Servomotor	Plug		Cable Clamp	Applicable Cable Range in mm (in) (For reference)
		Straight	L-shaped		
1.0 1.5 2.0	CE05-2A18-10PD-B	CE05-6A18-10SD-B-BSS	CE05-8A18-10SD-B-BAS	CE3057-10A-1	ϕ10.5 (ϕ0.41) to ϕ14.1 (ϕ0.56)
				CE3057-10A-2	ϕ 8.5 (ϕ0.33) to ϕ11.0 (ϕ0.43)
				CE3057-10A-3	ϕ 6.5 (ϕ0.26) to ϕ 8.7 (ϕ0.34)
3.0 4.0 5.0	JL04HV-2E22-22PE-B	JL04V-6A22-22SE-EB or JA06A-22-22S-J1-EB	JL04V-8A22-22SE-EB or JA08A-22-22S-J1-EB	JL04-2022CK(09)	ϕ 6.5 (ϕ0.26) to ϕ 9.5 (ϕ0.37)
				JL04-2022CK(12)	ϕ 9.5 (ϕ0.37) to ϕ13.0 (ϕ0.51)
				JL04-2022CK(14)	ϕ12.9 (ϕ0.51) to ϕ15.9 (ϕ0.63)

(b) Brake Power Supply Connector

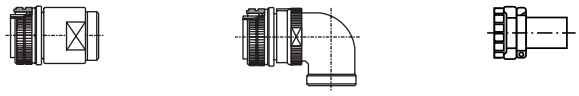

Capacity (kW)	Connector on Servomotor	Plug		Cable Clamp	Applicable Cable Range in mm (in) (For reference)
		Straight	L-shaped		
1.0 1.5 2.0 3.0 4.0 5.0	CE05-2A10SL-3PC-B	CE05-6A10SL-3SC-B-BSS	CE05-8A10SL-3SC-B-BAS	CE3057-4A-1	ϕ 3.6 (ϕ0.14) to ϕ5.6 (ϕ0.22)

(4) Servomotor Main Circuit Connector Pin Arrangement

(a) Without Brakes

Three-phase 200 V and 400 V 1.0 to 5.0 kW

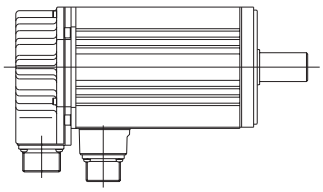

Servomotor Connector Pin Arrangement

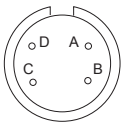

Pin No.	Signal
A	Phase U
B	Phase V
C	Phase W
D	FG (Frame Ground)

(b) With Brakes

① Three-phase 200 V 1.0 to 5.0 kW

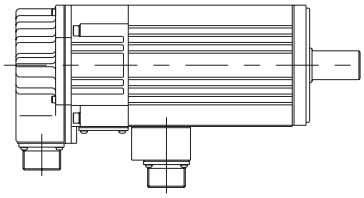

Servomotor Connector Pin Arrangement

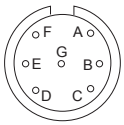

Pin No.	Signal	Pin No.	Signal
A	Phase U	E *	Brake terminal
B	Phase V	F *	Brake terminal
C	Phase W	G	—
D	FG (Frame Ground)	* No polarity	

② Three-phase 400 V 1.0 to 5.0 kW

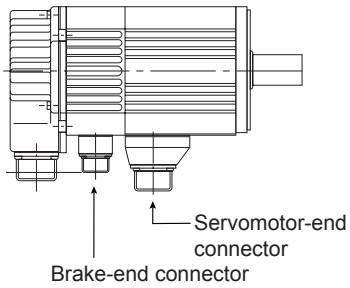

Brake Connector Pin Arrangement

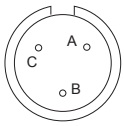

Pin No.	Signal
A *	Brake terminal
B *	Brake terminal
C	—

* No polarity

Servomotor Connector Pin Arrangement

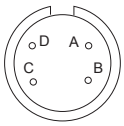

Pin No.	Signal
A	Phase U
B	Phase V
C	Phase W
D	FG (Frame Ground)

5

5.2.12 SGMDH Servomotors (2000 min^{-1}) Connectors Conforming to IP67 and European Safety Standards

(1) Servomotors With and Without Holding Brakes

Select a cable clamp in accordance with the applied cable diameter.

INFO

The straight plug type JA06A-24-10S-J1-EB and L-shaped plug type JA08A-24-10S-J1-EB conform to IP67 Protective Construction Standard only.

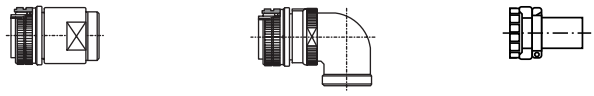

Capacity (kW)	Connector on Servomotor	Plug		Cable Clamp	Applicable Cable Range in mm (in) (For reference)
		Straight	L-shaped		
2.2 3.2 4.0	JL04V-2E24-10PE-B	JL04V-6A24-10SE-EB or JA06A-24-10S-J1-EB	JL04V-8A24-10SE-EB or JA08A-24-10S-J1-EB	JL04-2428CK(11)	ϕ 9.0 (ϕ0.35) to ϕ12.0 (ϕ0.47)
				JL04-2428CK(14)	ϕ12.0 (ϕ0.47) to ϕ15.0 (ϕ0.59)
				JL04-2428CK(17)	ϕ15.0 (ϕ0.59) to ϕ18.0 (ϕ0.71)
				JL04-2428CK(20)	ϕ18.0 (ϕ0.71) to ϕ20.0 (ϕ0.79)

(2) SGMDH (2000 min^{-1}) Servomotor Main Circuit Connector Pin Arrangement

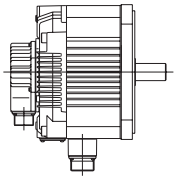

Servomotor-end connector

- Without Brakes

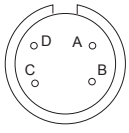

Pin No.	Signal
A	Phase U
B	Phase V
C	Phase W
D	FG (Frame Ground)

- With Brakes

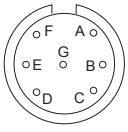

Pin No.	Signal	Pin No.	Signal
A	Phase U	E *	Brake terminal
B	Phase V	F *	Brake terminal
C	Phase W	G	—
D	FG (Frame Ground)	* No polarity	

5.2.13 SGMUH Servomotors (6000 min^{-1}) Connectors Conforming to IP67 and European Safety Standards

(1) 400 V Servomotors Without Holding Brakes

Select a cable clamp in accordance with the applied cable diameter.

INFO

The straight plug type JA06A-22-22S-J1-EB and L-shaped plug type JA08A-22-22S-J1-EB conform to IP67 Protective Construction Standard only.

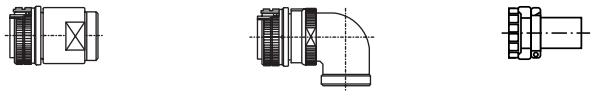

Capacity (kW)	Connector on Servomotor	Plug		Cable Clamp	Applicable Cable Range in mm (inch) (For reference)
		Straight	L-shaped		
1.0 1.5	CE05-2A18-10PD-B	CE05-6A18-10SD-B-BSS	CE05-8A18-10SD-B-BAS	CE3057-10A-1	ϕ10.5 (ϕ0.41) to ϕ14.1 (ϕ0.56)
				CE3057-10A-2	ϕ 8.5 (ϕ0.33) to ϕ11.0 (ϕ0.43)
				CE3057-10A-3	ϕ 6.5 (ϕ0.26) to ϕ 8.7 (ϕ0.34)
3.0 4.0	JL04HV-2E22-22PE-B	JL04V-6A22-22SE-EB or JA06A-22-22S-J1-EB	JL04V-8A22-22SE-EB or JA08A-22-22S-J1-EB	JL04-2022CK(09)	ϕ 6.5 (ϕ0.26) to ϕ 9.5 (ϕ0.37)
				JL04-2022CK(12)	ϕ 9.5 (ϕ0.37) to ϕ13.0 (ϕ0.51)
				JL04-2022CK(14)	ϕ12.9 (ϕ0.51) to ϕ15.9 (ϕ0.63)

(2) 400 V Servomotors With Holding Brakes

The servomotor-end connector (a) and brake power supply connector (b) are required.
Select a conduit in accordance with the applied cable diameter.

INFO

The straight plug type JA06A-22-22S-J1-EB and L-shaped plug type JA08A-22-22S-J1-EB conform to IP67 Protective Construction Standard only.

(a) Servomotor-end Connector

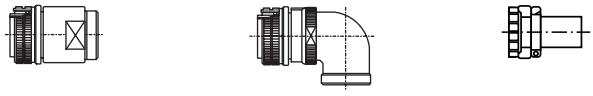

Capacity (kW)	Connector on Servomotor	Plug		Cable Clamp	Applicable Cable Range in mm (in) (For reference)
		Straight	L-shaped		
1.0 1.5	CE05-2A18-10PD-B	CE05-6A18-10SD-B-BSS	CE05-8A18-10SD-B-BAS	CE3057-10A-1	ϕ10.5 (ϕ0.41) to ϕ14.1 (ϕ0.56)
				CE3057-10A-2	ϕ 8.5 (ϕ0.33) to ϕ11.0 (ϕ0.43)
				CE3057-10A-3	ϕ 6.5 (ϕ0.26) to ϕ 8.7 (ϕ0.34)
3.0 4.0	JL04HV-2E22-22PE-B	JL04V-6A22-22SE-EB or JA06A-22-22S-J1-EB	JL04V-8A22-22SE-EB or JA08A-22-22S-J1-EB	JL04-2022CK(09)	ϕ 6.5 (ϕ0.26) to ϕ 9.5 (ϕ0.37)
				JL04-2022CK(12)	ϕ 9.5 (ϕ0.37) to ϕ13.0 (ϕ0.51)
				JL04-2022CK(14)	ϕ12.9 (ϕ0.51) to ϕ15.9 (ϕ0.63)

(b) Brake Power Supply Connector

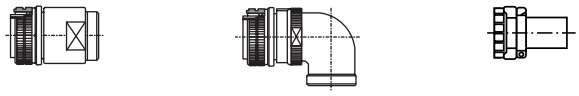

Capacity (kW)	Connector on Servomotor	Plug		Cable Clamp	Applicable Cable Range in mm (in) (For reference)
		Straight	L-shaped		
1.0 1.5 2.0 3.0 4.0 5.0	CE05-2A10SL-3PC-B	CE05-6A10SL-3SC-B-BSS	CE05-8A10SL-3SC-B-BAS	CE3057-4A-1	ϕ 3.6 (ϕ0.14) to ϕ5.6 (ϕ0.22)

(3) Servomotor Main Circuit Connector Pin Arrangement

(a) Without Brakes

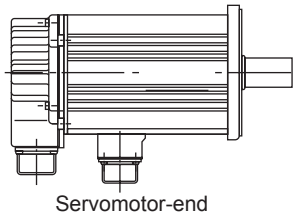

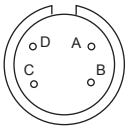

Pin No.	Signal
A	Phase U
B	Phase V
C	Phase W
D	FG (Frame Ground)

(b) With Brakes

Three-phase 400 V 1.0 to 4.0 kW

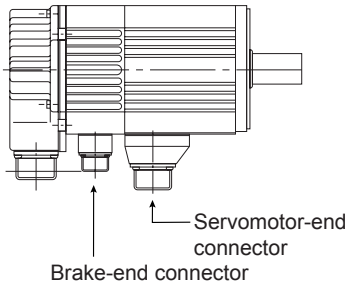

Brake Connector Pin Arrangement

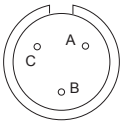

Pin No.	Signal
A *	Brake terminal
B *	Brake terminal
C	—

* No polarity

Servomotor Connector Pin Arrangement

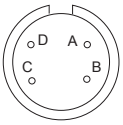

Pin No.	Signal
A	Phase U
B	Phase V
C	Phase W
D	FG (Frame Ground)

5.2.14 Connector Dimensional Drawings

(1) Connectors Conforming to European Safety Standards (TÜV Certified), Manufactured by DDK Electronics, Inc.

Contact Yaskawa Controls Co., Ltd.

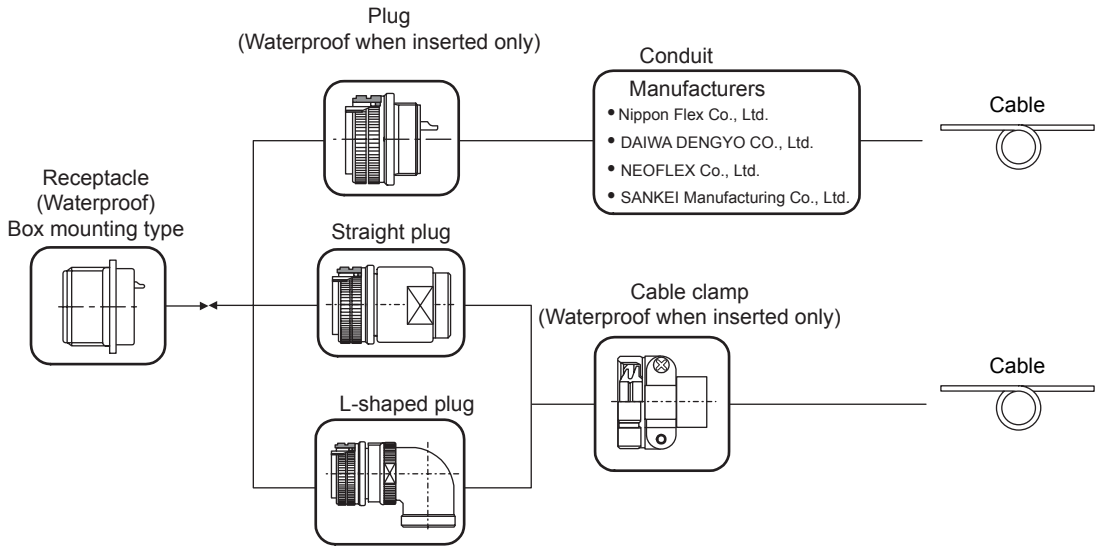

Note: Possible to connect with an MS connector.

(a) CE05 Series Products

For more information, contact the manufacturer of the conduit being used.

Receptacle	Plug		Waterproof Cable Clamp	Dimensional Drawings
	Type	Model		
CE05-2A10SL-3PC-B	Plug	CE05-6A10SL-3SC-B	Applicable with conduit	(d)
	Straight plug	CE05-6A10SL-3SC-B-BSS	CE3057-4A-1 (D265)	(b) and (e)
	L-shaped plug	CE05-8A10SL-3SC-B-BAS		(c) and (e)
CE05-2A18-10PD-B	Plug	CE05-6A18-10SD-B	Applicable with conduit	(d)
	Straight plug	CE05-6A18-10SD-B-BSS	CE3057-10A-□ (D265)	(b) and (e)
	L-shaped plug	CE05-8A18-10SD-B-BAS		(c) and (e)

(b) Straight Plugs

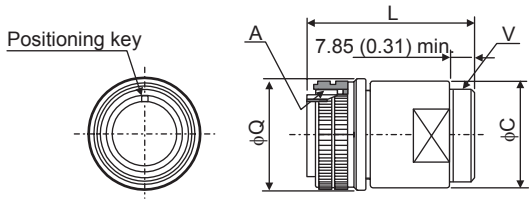

Units: mm (in)

Model	Joint Screw A	Outer Diameter of Nut $\phi Q^{+0}_{-0.38}$ (-0.015)	ϕC±0.8 (±0.03)	Max. Overall Length L	Cable Clamp Mounting Screw V
CE05-6A10SL-3SC-BSS	5/8-24UNEF-2B	22.22 (0.87)	18.6 (0.73)	40 (1.57)	5/8-24UNEF-2A
CE05-6A18-10SD-B-BSS	1 1/8-18UNEF-2B	34.13 (1.34)	32.1 (1.26)	57 (2.24)	1-20UNEF-2A

Note: The plug CE05-6A□□-□□P□-B-BSS is pin inserting type. The mating receptacle is socket inserting type.

(c) L-shaped Plugs

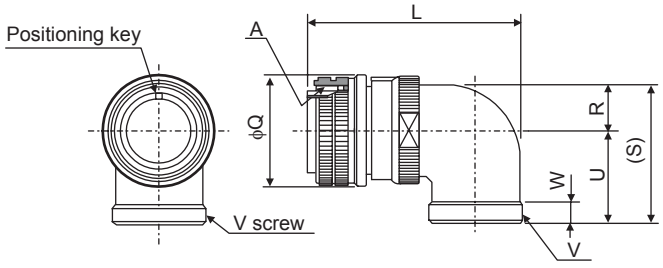

Units: mm (in)

Model	Joint Screw A	Outer Diameter of Nut $\phi Q^{+0}_{-0.38}$ (-0.015)	Max. Overall Length L	Cable Clamp Mounting Screw V	R±0.7 (±0.03)	U±0.7 (±0.03)	(S)±1 (±0.04)	Effective Screw Length W
CE05-8A10SL-3SC-B-BAS	5/8-24UNEF-2B	22.22 (0.87)	47.8 (1.88)	5/8-24UNEF-2A	7.9 (0.31)	21.0 (0.83)	28.9 (1.14)	7.5 (0.30)
CE05-8A18-10SD-B-BAS	1 1/8-18UNEF-2B	34.13 (1.34)	69.5 (2.74)	1-20UNEF-2A	13.2 (0.52)	30.2 (1.19)	43.4 (1.71)	7.5 (0.30)

Note: The plug CE05-8A□□-□□P□-B-BAS is pin inserting type. The mating receptacle is socket inserting type.

(d) Plug

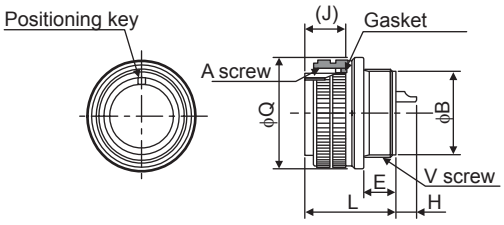

Units: mm (in)

Model	Joint Screw A	Outer Diameter of Nut $\phi Q^{+0}_{-0.38}$ (-0.015)	Overall Length L±1 (±0.04)	Conduit Mounting Screw V	E±0.5 (±0.02)	$\phi B^{+0.05}_{-0.25}$ (+0.002) (-0.010)	H±0.1 (±0.004)	(J)
CE05-6A10SL-3SC-B	5/8-24UNEF-2B	22.22 (0.87)	23.3 (0.92)	9/16-24UNEF-2A	7.5 (0.30)	12.5 (0.49)	5.6 (0.22)	13.2 (0.52)
CE05-6A18-10SD-B	1 1/8-18UNEF-2B	34.13 (1.34)	33.7 (1.33)	1-20UNEF-2A	11.74 (0.46)	23.5 (0.93)	6.4 (0.25)	19.0 (0.75)

Note: 1. The plug CE05-6A□□-□□P□-B is pin inserting type. The mating receptacle is socket inserting type.
2. Consult the conduit manufacturer if a conduit is required.

(e) CE3057-□□A-□(D265) Waterproof Cable Clamp With Rubber Bushing

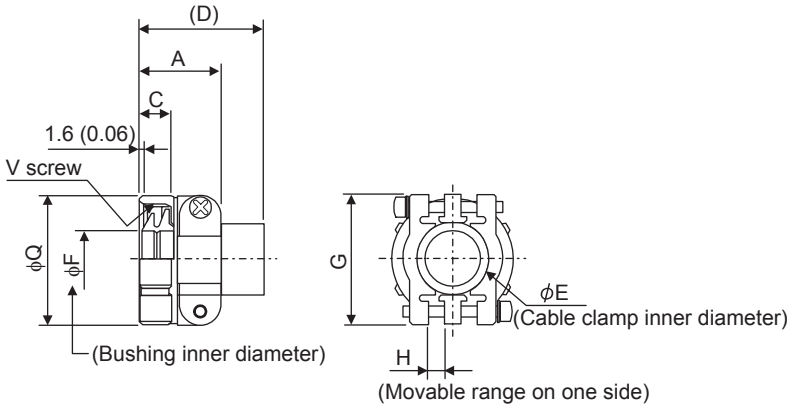

Units: mm (in)

Model	Applicable Shell Size	Overall Length A±0.7 (±0.03)	Outer Diameter ϕQ±0.7 (±0.03)	Effective Screw Length C	(D)	E	F	G±0.7 (±0.03)	H
CE3057-4A-1(D265)	10SL	20.6 (0.811)	20.6 (0.811)	10.3 (0.406)	(41.3) (1.63)	7.9 (0.311)	5.6 (0.220)	22.2 (0.87)	1.6 (0.063)
CE3057-10A-1(D265)	18	23.8 (0.937)	30.1 (1.19)	10.3 (0.406)	(41.3) (1.63)	15.9 (0.626)	14.1 (0.555)	31.7 (1.25)	3.2 (0.13)
CE3057-10A-2(D265)							11 (0.433)		
CE3057-10A-3(D265)							8.7 (0.34)		

Model	Cable Clamp Mounting Screw V	Attached Bushing Model	Applicable Cable Range in mm (in) (For reference)
CE3057-4A-1(D265)	5/8-24UNEF-2B	CE3420-4-1	ϕ3.6 (ϕ0.14) to ϕ5.6 (ϕ0.22)
CE3057-10A-1(D265)	1-20UNEF-2B	CE3420-10-1	ϕ10.5 (ϕ0.41) to ϕ14.1 (ϕ0.56)
CE3057-10A-2(D265)		CE3420-10-2	ϕ8.5 (ϕ0.33) to ϕ11 (ϕ0.43)
CE3057-10A-3(D265)		CE3420-10-3	ϕ6.5 (0.26) to ϕ8.7 (0.34)

Note: The cable clamp CE3057-6A for the shell size 14 is not available. Use together with a conduit.

(2) Connectors Conforming to European Safety Standards (TÜV Certified), Manufactured by Japan Aviation Electronics Industry, Ltd.

Contact Yaskawa Controls Co., Ltd.

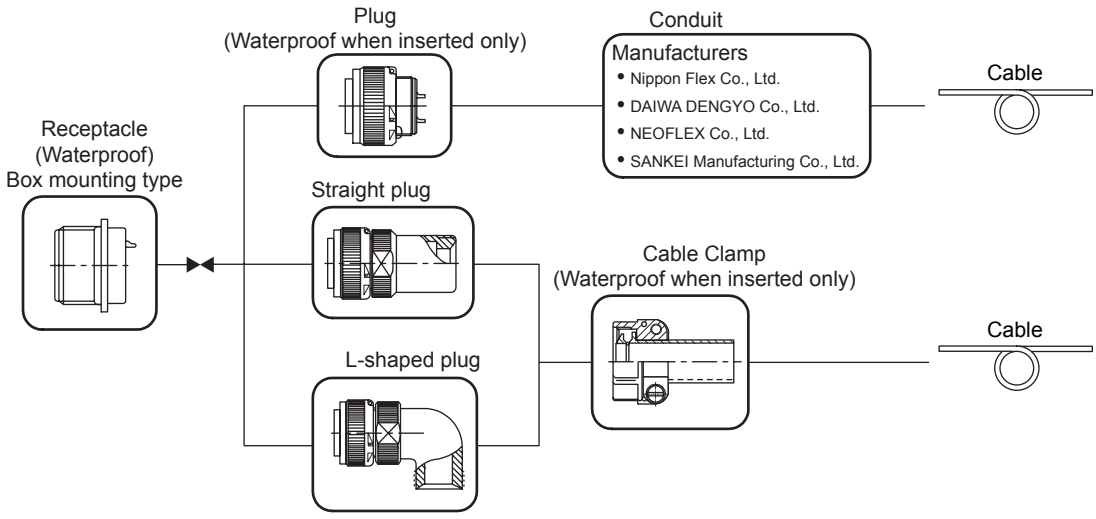

Note: Possible to connect with an MS connector

(a) JL04V Series Products

For more information, contact the manufacturer of the conduit being used.

Receptacle	Plug		Waterproof Cable Clamp	Dimensional Drawings
	Type	Model		
JL04V-2E20-15PE-B	Plug	JL04V-6A20-15SE	Applicable with conduit	(d)
	Straight plug	JL04V-6A20-15SE-EB	JL04-2022CK(14) or applicable with conduit	(b) and (e)
	L-shaped plug	JL04V-8A20-15SE-EB		(c) and (e)
JL04HV-2E22-22PE-B	Plug	JL04V-6A22-22SE	Applicable with conduit	(d)
	Straight plug	JL04V-6A22-22SE-EB	JL04-2022CK(14) or applicable with conduit	(b) and (e)
	L-shaped plug	JL04V-8A22-22SE-EB		(c) and (e)
JL04HV-2E24-10PE-B	Plug	JL04V-6A24-10SE	JL04-2028CK(14) or applicable with conduit	(d)
	Straight plug	JL04V-6A24-10SE-EB		(b) and (e)
	L-shaped plug	JL04V-8A24-10SE-EB		(c) and (e)
JL04V-2E32-17PE-B	Plug	JL04V-6A32-17SE	Applicable with conduit	(d)

(b) Straight Plugs

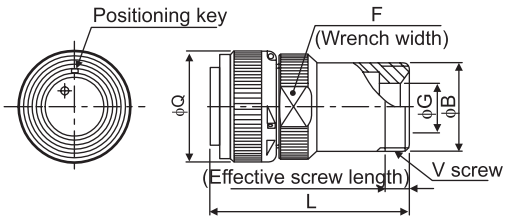

Units: mm (in)

Model	Outer Diameter of Nut ϕQ±0.8 (±0.03)	ϕB±0.2 (±0.01)	L±0.8 (±0.03)	F±0.5 (±0.02)	ϕG±0.5 (±0.02)	Cable Clamp Mounting Screw V
JL04V-6A20-15SE-EB	37.3 (1.47)	29.72 (1.17)	58.5 (2.30)	33 (1.30)	17 (0.67)	1-3/16-18UNEF-2A
JL04V-6A22-22SE-EB	40.5 (1.59)	30.05 (1.18)	67.63 (2.66)	35 (1.38)	17 (0.67)	1-3/16-18UNEF-2A

Note: For the conduit grounding, contact manufacturer of the conduit being used.

(c) L-shaped Plugs

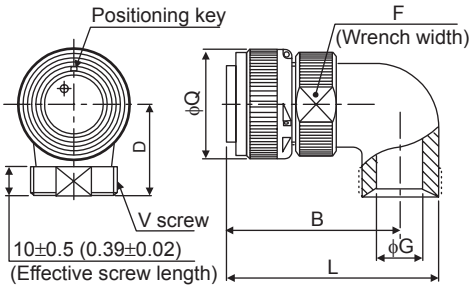

Units: mm (in)

Model	Outer Diameter of Nut $\phi Q^{+0}_{-0.38}$ (-0.015)	B±0.8 (±0.03)	L±0.8 (±0.03)	D±0.8 (±0.03)	F±0.5 (±0.02)	ϕG±0.5 (±0.02)	Cable Clamp Mounting Screw V
JL04V-8A20-15SE-EB	37.3 (1.47)	60.5 (2.38)	74.2 (2.92)	32 (1.26)	33 (1.30)	17 (0.67)	1-3/16-18UNEF-2A
JL04V-8A22-22SE-EB	40.5 (1.59)	60.23 (2.37)	73.93 (2.91)	32 (1.26)	35 (1.38)	17 (0.67)	1-3/16-18UNEF-2A

Note: For the conduit grounding, contact manufacturer of the conduit being used.

(d) Plugs

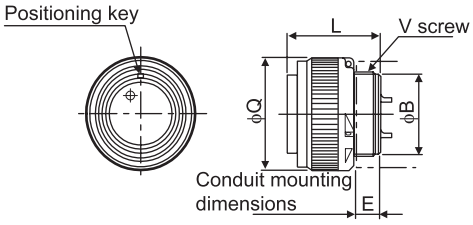

Units: mm (in)

Model	Outer Diameter of Nut ϕQ±0.8 (±0.03)	ϕB±0.2 (±0.01)	L±0.4 (±0.02)	E max.	Conduit Mounting Screw V
JL04V-6A20-15SE	37.3 (1.47)	27.0 (1.06)	31.5 (1.24)	8 (0.31)	1-1/8-18UNEF-2A
JL04V-6A22-22SE	40.5 (1.59)	29.7 (1.17)	31.2 (1.23)	8 (0.31)	1-1/4-18UNEF-2A
JL04V-6A32-17SE	56.3 (2.22)	45.4 (1.79)	35.8 (1.41)	10 (0.39)	1-7/8-16UN-2A

Note: For the conduit grounding, contact manufacturer of the conduit being used.

(e) Waterproof Cable Clamps With Rubber Bushings

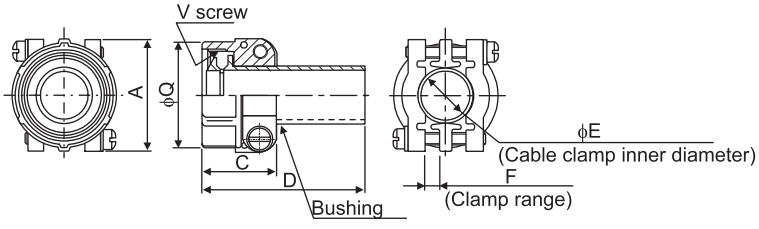

Units: mm (in)

Model	Applicable Shell Size	A±0.8 (±0.03)	ϕQ±0.8 (±0.03)	C±0.8 (±0.03)	D±0.8 (±0.03)	ϕE±0.8 (±0.03)	F±0.8 (±0.03)	Mounting Screw V	Applicable Cable Range in mm (in)
JL04-2022CK(14)	20 (0.79) and 22 (0.87)	37.3 (1.47)	34.9 (1.37)	24.3 (0.96)	53.8 (2.12)	15.9 (0.63)	4 (0.16)	1-3/16-18UNEF-2B	ϕ12.9 (0.51) to ϕ15.9 (0.63)
JL04-2428CK(17)	24 (0.94) and 28 (1.10)	42.9 (1.69)	42.1 (1.66)	26.2 (1.03)	56.2 (2.21)	18 (0.71)	4.8 (0.19)	1-7/16-18UNEF-2B	ϕ15 (0.59) to ϕ18 (0.71)

5.3 SERVOPACK Main Circuit Wire Size

IMPORTANT

1. Wire sizes were selected for three cables per bundle at 40 °C (104 °F) ambient temperature with the rated current.
2. Use cable with a minimum withstand voltage of 600 V for main circuits.
3. If cables are bundled in PVC or metal ducts, consider the reduction ratio of the allowable current.
4. Use heat-resistant cables under high ambient or panel temperatures where normal vinyl cables will rapidly deteriorate.
5. Use cables within the allowable moment of inertia.
6. Do not use cables under continuous regenerative state.

5.3.1 Cable Types

Cable Types		Allowable Conductor Temperature °C (°F)
Symbol	Name	
PVC	Normal vinyl cable	–
IV	600-V vinyl cable	60 (140)
HIV	Temperature-resistant vinyl cable	75 (167)

The following table shows the wire size and allowable current for three cables. Use a cable whose specifications meet or are less than the values in the table.

- 600-V Heat-resistant Vinyl Cables (HIV)

AWG Size	Nominal Cross Section Diameter mm^2 (in^2)	Configuration Number of wires/mm^2 (in^2)	Conductive Resistance Ω/km	Allowable Current at Ambient Temperature A		
				30°C (86°F)	40°C (104°F)	50°C (122°F)
20	0.5 (0.00078)	19/0.18 (0.00028)	39.5	6.6	5.6	4.5
-	0.75 (0.00116)	30/0.18 (0.00028)	26.0	8.8	7.0	5.5
18	0.9 (0.00140)	37/0.18 (0.00028)	24.4	9.0	7.7	6.0
16	1.25 (0.00193)	50/0.18 (0.00028)	15.6	12.0	11.0	8.5
14	2.0 (0.00310)	7/0.6 (0.00093)	9.53	23	20	16
12	3.5 (0.00543)	7/0.8 (0.00124)	5.41	33	29	24
10	5.5 (0.00853)	7/1.0 (0.00155)	3.47	43	38	31
8	8.0 (0.0124)	7/1.2 (0.00186)	2.41	55	49	40
6	14.0 (0.0217)	7/1.6 (0.00248)	1.35	79	70	57
4	22.0 (0.0341)	7/2.0 (0.00310)	0.85	91	81	66

Note: The values in the table are only for reference.

5.3.2 Single-phase 100 V

External Terminal Name	Terminal Symbol	SERVOPACK Model SGDH-			
		A3BE	A5BE	01BE	02BE
Main circuit power supply input terminals	L1, L2	HIV1.25			HIV2.0
Servomotor connection terminals	U, V, W	HIV1.25			
Control power supply input terminals	L1C, L2C	HIV1.25			
External regenerative resistor connection terminals	B1, B2	HIV1.25			
Ground terminal	⏚	HIV2.0 or more			

5.3.3 Single-phase 200 V

External Terminal Name	Terminal Symbol	SERVOPACK Model SGDH-						
		A3AE	A5AE	01AE	02AE	04AE	08AE-S	15AE-S
Main circuit power supply input terminals	L1, L2	HIV1.25				HIV2.0		HIV3.5
Servomotor connection terminals	U, V, W	HIV1.25						HIV2.0
Control power supply input terminals	L1C, L2C	HIV1.25						
External regenerative resistor connection terminals	B1, B2	HIV1.25						
Ground terminal	⏚	HIV2.0 or more						

5.3.4 Three-phase 200 V

External Terminal Name	Terminal Symbol	SERVOPACK Model SGDH-					
		A5AE	08AE	10AE	15AE	20AE	30AE
Main circuit power supply input terminals	L1, L2, L3	HIV2.0				HIV3.5	
Servomotor connection terminals	U, V, W	HIV2.0				HIV3.5	HIV5.5
Control power supply input terminals	L1C, L2C	HIV1.25					
External regenerative resistor connection terminals	B1, B2	HIV1.25				HIV2.0	HIV3.5
Ground terminal	⏚	HIV2.0 or more					

External Terminal Name	Terminal Symbol	SERVOPACK Model SGDH-				
		50AE	60AE	75AE	1AAE	1EAE
Main circuit power supply input terminals	L1, L2, L3	HIV5.5	HIV8	HIV14	HIV22	
Servomotor connection terminals	U, V, W	HIV8	HIV14		HIV22	
Control power supply input terminals	L1C, L2C	HIV1.25				
External regenerative resistor connection terminals	B1, B2	HIV5.5	HIV8.0		HIV22	
Ground terminal	⏚	HIV2.0 or more				

5.3.5 Three-phase 400 V

External Terminal Name	Terminal Symbol	SERVOPACK Model SGDH-				
		05DE	10DE	15DE	20DE	30DE
Main circuit power supply input terminals	L1, L2, L3 (Three-phase)	HIV1.25			HIV2.0	
Servomotor connection terminals	U, V, W	HIV1.25			HIV2.0	
Control power supply input terminals	24V, 0V	HIV1.25				
External regenerative resistor connection terminals	B1, B2	HIV1.25				
Ground terminal	⏚	HIV2.0 or more				

External Terminal Name	Terminal Symbol	SERVOPACK Model SGDH-				
		50DE	60DE	75DE	1ADE	1EDE
Main circuit power supply input terminals	L1, L2, L3 (Three-phase)	HIV3.5		HIV5.5	HIV8	HIV14
Servomotor connection terminals	U, V, W	HIV3.5	HIV5.5		HIV8	HIV14
Control power supply input terminals	24V, 0V	HIV1.25				
External regenerative resistor connection terminals	B1, B2	HIV2.0	HIV3.5		HIV5.5	HIV8.0
Ground terminal	⏚	HIV2.0 or more				

5.4 Encoder Cables for CN2 Connector

When assembling the encoder cable, refer to *5.5 Connectors and Cables for Encoder Signals.*
Contact Yaskawa Controls Co., Ltd. for IP67 applicable cables, flexible cables and connectors.

5.4.1 Encoder Cable With Connectors For SGMAH and SGMPH Servomotors

Cable Type	Cable Length (L)	Dimensional Drawing
JZSP-CMP00-03	3 m (9.84 ft)	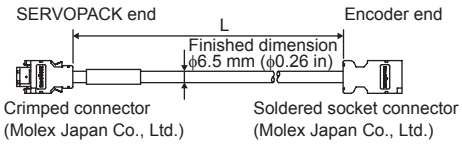
JZSP-CMP00-05	5 m (16.40 ft)	
JZSP-CMP00-10	10 m (32.81 ft)	
JZSP-CMP00-15	15 m (49.21 ft)	
JZSP-CMP00-20	20 m (65.62 ft)	

5.4.2 Encoder Cable for SGMGH, SGMSH, SGMDH, and SGMUH Servomotors

(1) Cable With a SERVOPACK Connector and Encoder Straight Plug

Cable Type	Cable Length (L)	Dimensional Drawing
JZSP-CMP01-03	3 m (9.84 ft)	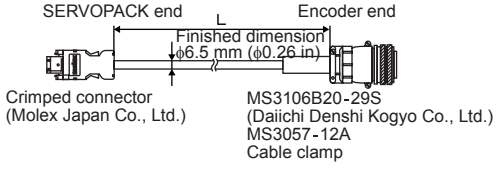
JZSP-CMP01-05	5 m (16.40 ft)	
JZSP-CMP01-10	10 m (32.81 ft)	
JZSP-CMP01-15	15 m (49.21 ft)	
JZSP-CMP01-20	20 m (65.62 ft)	

(2) Cable With a SERVOPACK Connector and Encoder L-shaped Plug

Cable Type	Cable Length (L)	Dimensional Drawing
JZSP-CMP02-03	3 m (9.84 ft)	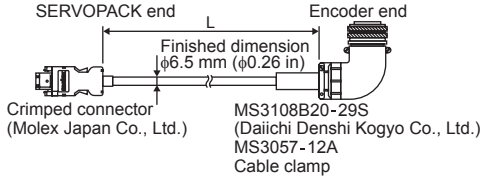
JZSP-CMP02-05	5 m (16.40 ft)	
JZSP-CMP02-10	10 m (32.81 ft)	
JZSP-CMP02-15	15 m (49.21 ft)	
JZSP-CMP02-20	20 m (65.62 ft)	

5.4.3 Encoder Cable With a SERVOPACK Connector and Encoder Loose Leads for SGMAH and SGMPH Servomotors

(1) Cable Type

Cable Type	Cable Length (L)	Dimensional Drawing
JZSP-CMP03-03	3 m (9.84 ft)	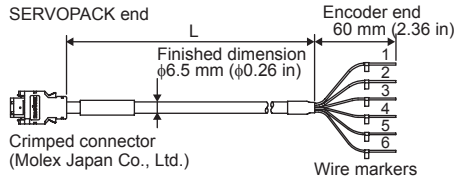
JZSP-CMP03-05	5 m (16.40 ft)	
JZSP-CMP03-10	10 m (32.81 ft)	
JZSP-CMP03-15	15 m (49.21 ft)	
JZSP-CMP03-20	20 m (65.62 ft)	

(2) Encoder-end Connector Kit

Type	Manufacturer
JZSP-CMP9-2	Molex Japan Co., Ltd.

Socket (Soldered)

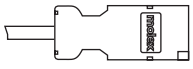

(3) Encoder Plug Connector Pin Arrangement

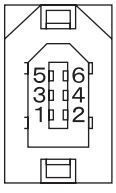

Plug:
JZSP-CMP9-1 (SERVOPACK end)
Socket:
JZSP-CMP9-2 (Encoder end)

16-bit Serial Absolute Encoder Connection Specifications

Pin No.	Signal	Lead Color
1	PG5V	Red
2	PG0V	Black
3	BAT(+)	Orange
4	BAT(–)	White/ Orange
5	PS	Light blue
6	/PS	White/ Light blue

13-bit Serial Incremental Encoder Connection Specifications

Pin No.	Signal	Lead Color
1	PG5V	Red
2	PG0V	Black
3	–	–
4	–	–
5	PS	Light blue
6	/PS	White/ Light blue

5.4.4 Encoder Cable with a SERVOPACK Connector and Encoder Loose Leads for SGMGH, SGMSH, SGMDH, and SGMUH Servomotors

(1) Cable Type

Cable Type	Cable Length (L)	Dimensional Drawing
JZSP-CMP03-03	3 m (9.84 ft)	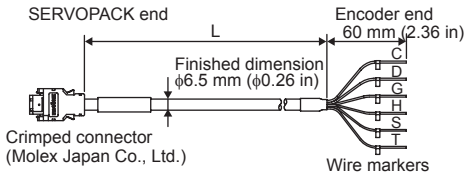
JZSP-CMP03-05	5 m (16.40 ft)	
JZSP-CMP03-10	10 m (32.81 ft)	
JZSP-CMP03-15	15 m (49.21 ft)	
JZSP-CMP03-20	20 m (65.62 ft)	

(2) Encoder-end Connector

Contact Yaskawa Controls Co., Ltd.

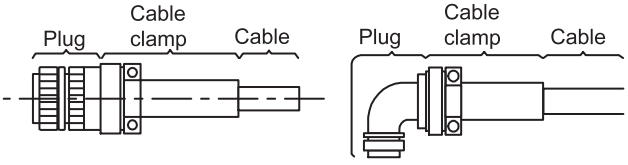

Connector on Servomotor	Plug (Manufactured by Daiichi Denshi Kogyo Co., Ltd.)		Cable Clamp (Manufactured by Daiichi Denshi Kogyo Co., Ltd.)
	Type	Model	
MS3102A20-29P	Straight	MS3106B20-29S	MS3057-12A
	L-shaped	MS3108B20-29S	

(3) Encoder Plug Connector Pin Arrangement

17-bit Absolute Encoder Connection Specifications

Pin No.	Signal	Lead Color	Pin No.	Signal	Lead Color
A	–	–	K	–	–
B	–	–	L	–	–
C	PS	Light blue	M	–	–
D	/PS	White/ Light blue	N	–	–
E	–	–	P	–	–
F	–	–	R	–	–
G	PG0V	Black	S	BAT(–)	White/ Orange
H	PG5V	Red	T	BAT(+)	Orange
J	FG (Frame Ground) Shield wire				

17-bit Incremental Encoder Connection Specifications

Pin No.	Signal	Lead Color	Pin No.	Signal	Lead Color
A	–	–	K	–	–
B	–	–	L	–	–
C	PS	Light blue	M	–	–
D	/PS	White/ Light blue	N	–	–
E	–	–	P	–	–
F	–	–	R	–	–
G	PG0V	Black	S	–	–
H	PG5V	Red	T	–	–
J	FG (Frame Ground) Shield wire				

5

5.4.5 Encoder Flexible Cables for SGMAH and SGMPH Servomotors

(1) Flexible Cable With Connectors

Cable Type	Cable Length (L)	Dimensional Drawing
JZSP-CMP10-03	3 m (9.84 ft)	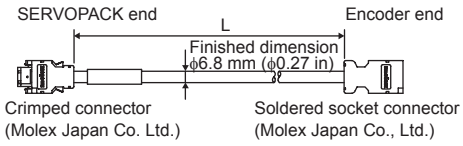
JZSP-CMP10-05	5 m (16.40 ft)	
JZSP-CMP10-10	10 m (32.81 ft)	
JZSP-CMP10-15	15 m (49.21 ft)	
JZSP-CMP10-20	20 m (65.62 ft)	

(2) Flexible Cable With a SERVOPACK Connector and Encoder Loose Leads

(a) Cable Type

Cable Type	Cable Length (L)	Dimensional Drawing
JZSP-CMP13-03	3 m (9.84 ft)	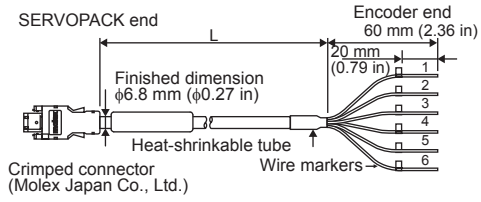
JZSP-CMP13-05	5 m (16.40 ft)	
JZSP-CMP13-10	10 m (32.81 ft)	
JZSP-CMP13-15	15 m (49.21 ft)	
JZSP-CMP13-20	20 m (65.62 ft)	

(b) Encoder-end Connector Kit

Type	Manufacturer
JZSP-CMP9-2	Molex Japan Co., Ltd.

Socket (Soldered)

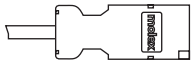

(c) Encoder Plug Connector Pin Arrangement

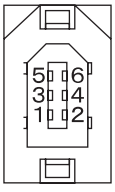

Plug:
JZSP-CMP9-1 (SERVOPACK end)
Socket:
JZSP-CMP9-2 (Encoder end)

16-bit Serial Absolute Encoder Connection Specifications

Pin No.	Signal	Lead Color
1	PG5V	Red
2	PG0V	Black
3	BAT(+)	Orange
4	BAT(–)	White/ Orange
5	PS	Light blue
6	/PS	White/ Light blue

13-bit Serial Incremental Encoder Connection Specifications

Pin No.	Signal	Lead Color
1	PG5V	Red
2	PG0V	Black
3	–	–
4	–	–
5	PS	Light blue
6	/PS	White/ Light blue

5.4.6 Encoder Flexible Cables for SGMGH, SGMSH, SGMDH, and SGMUH Servomotors

(1) Flexible Cable With a SERVOPACK Connector and Encoder Straight Plug

Cable Type	Cable Length (L)	Dimensional Drawing
JZSP-CMP11-03	3 m (9.84 ft)	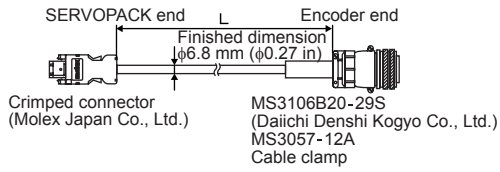
JZSP-CMP11-05	5 m (16.40 ft)	
JZSP-CMP11-10	10 m (32.81 ft)	
JZSP-CMP11-15	15 m (49.21 ft)	
JZSP-CMP11-20	20 m (65.62 ft)	

(2) Flexible Cable With a SERVOPACK Connector and Encoder L-shaped Plug

Cable Type	Cable Length (L)	Dimensional Drawing
JZSP-CMP12-03	3 m (9.84 ft)	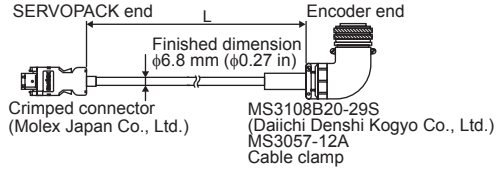
JZSP-CMP12-05	5 m (16.40 ft)	
JZSP-CMP12-10	10 m (32.81 ft)	
JZSP-CMP12-15	15 m (49.21 ft)	
JZSP-CMP12-20	20 m (65.62 ft)	

(3) Flexible Cable With a SERVOPACK Connector and Encoder Loose Leads

(a) Cable Type

Cable Type	Cable Length (L)	Dimensional Drawing
JZSP-CMP13-03	3 m (9.84 ft)	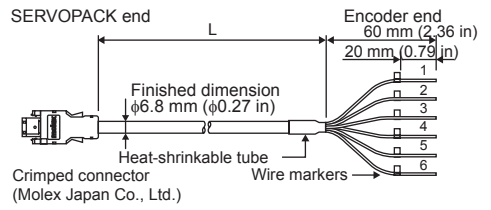
JZSP-CMP13-05	5 m (16.40 ft)	
JZSP-CMP13-10	10 m (32.81 ft)	
JZSP-CMP13-15	15 m (49.21 ft)	
JZSP-CMP13-20	20 m (65.62 ft)	

(b) Encoder-end Connector

Contact Yaskawa Controls Co., Ltd.

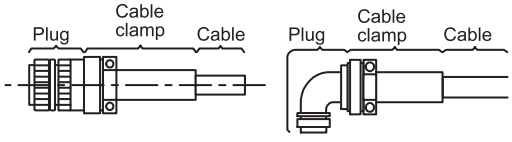

Connector on Servomotor	Plug (Manufactured by Daiichi Denshi Kogyo Co., Ltd.)		Cable Clamp (Manufactured by Daiichi Denshi Kogyo Co., Ltd.)
	Type	Model	
MS3102A20-29P	Straight	MS3106B20-29S	MS3057-12A
	L-shaped	MS3108B20-29S	

(c) Encoder Plug Connector Pin Arrangement

17-bit Absolute Encoder Connection Specifications

Pin No.	Signal	Lead Color	Pin No.	Signal	Lead Color
A	–	–	K	–	–
B	–	–	L	–	–
C	PS	Light blue	M	–	–
D	/PS	White/ Light blue	N	–	–
E	–	–	P	–	–
F	–	–	R	–	–
G	PG0V	Black	S	BAT(–)	White/ Orange
H	PG5V	Red	T	BAT(+)	Orange
J	FG (Frame Ground) Shield wire				

17-bit Incremental Encoder Connection Specifications

Pin No.	Signal	Lead Color	Pin No.	Signal	Lead Color
A	–	–	K	–	–
B	–	–	L	–	–
C	PS	Light blue	M	–	–
D	/PS	White/ Light blue	N	–	–
E	–	–	P	–	–
F	–	–	R	–	–
G	PG0V	Black	S	–	–
H	PG5V	Red	T	–	–
J	FG (Frame Ground) Shield wire				

5.5 Connectors and Cables for Encoder Signals

The IP67 applicable cables, flexible cables and connectors are options. Contact Yaskawa Controls Co., Ltd.

5.5.1 Connectors and Cables for SGMAH and SGMPH Servomotors

(1) Cable Type

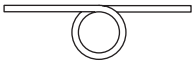

Cables for Maximum 20 m (65.62 ft) Wiring Distance

Cable Type	Cable Length
JZSP-CMP09-05	5 m (16.40 ft)
JZSP-CMP09-10	10 m (32.81 ft)
JZSP-CMP09-15	15 m (49.21 ft)
JZSP-CMP09-20	20 m (65.62 ft)

Cables for Maximum 50 m (164.04 ft) Wiring Distance

Cable Type	Cable Length
JZSP-CMP19-30	30 m (98.43 ft)
JZSP-CMP19-40	40 m (131.23 ft)
JZSP-CMP19-50	50 m (164.04 ft)

(2) SERVOPACK-end Connector for CN2

Units: mm (in)

Model	Manufacturer	Dimensional Drawing
JZSP-CMP9-1	Molex Japan Co., Ltd.	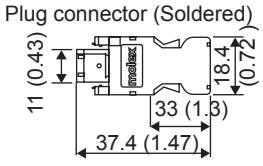

(3) Encoder-end Connector

Units: mm (in)

Model	Manufacturer	Dimensional Drawing
JZSP-CMP9-2	Molex Japan Co., Ltd.	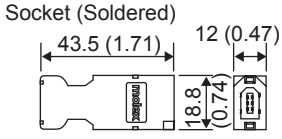

5

(4) Encoder Cable Specifications

Cable Type	JZSP-CMP09-□□	JZSP-CMP19-□□
Cable Length	20 m (65.62 ft) max.	50 m (164.04 ft) max.
Basic Specifications	T/20276-SB AWG22×2C+AWG24×2P	T/20276-SB AWG16×2C+AWG26×2P
Finished Dimensions	ϕ6.5 mm (ϕ0.26 in)	ϕ6.8 mm (ϕ0.27 in)
Internal Configuration and Lead Colors	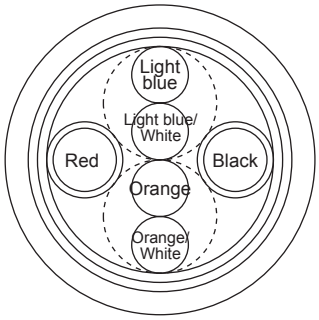	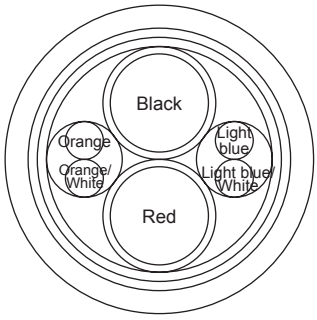
Yaskawa Standard Specifications (Standard Length)	5 m (16.40 ft), 10 m (32.81 ft), 15 m (49.21 ft), 20 m (65.62 ft)	30 m (98.43 ft), 40 m (131.23 ft), 50 m (164.04 ft)

(5) Encoder Plug Connector Pin Arrangement

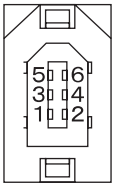

Plug:
JZSP-CMP9-1 (SERVOPACK end)
Socket:
JZSP-CMP9-2 (Encoder end)

16-bit Serial Absolute Encoder Connection Specifications

Pin No.	Signal	Lead Color
1	PG5V	Red
2	PG0V	Black
3	BAT(+)	Orange
4	BAT(−)	White/ Orange
5	PS	Light blue
6	/PS	White/ Light blue

13-bit Serial Incremental Encoder Connection Specifications

Pin No.	Signal	Lead Color
1	PG5V	Red
2	PG0V	Black
3	−	−
4	−	−
5	PS	Light blue
6	/PS	White/ Light blue

5.5.2 Connectors and Cables for SGMGH, SGMSH, SGMDH, and SGMUH Servomotors

(1) Cable Type

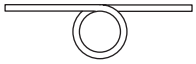

Cables for Maximum 20 m (65.62 ft) Wiring Distance

Cable Type	Cable Length
JZSP-CMP09-05	5 m (16.40 ft)
JZSP-CMP09-10	10 m (32.81 ft)
JZSP-CMP09-15	15 m (49.21 ft)
JZSP-CMP09-20	20 m (65.62 ft)

Cables for Maximum 50 m (164.04 ft) Wiring Distance

Cable Type	Cable Length
JZSP-CMP19-30	30 m (98.43 ft)
JZSP-CMP19-40	40 m (131.23 ft)
JZSP-CMP19-50	50 m (164.04 ft)

(2) SERVOPACK-end Connector for CN2

Model	Manufacturer	Dimensional Drawing
JZSP-CMP9-1	Molex Japan Co., Ltd.	Plug connector (Soldered) 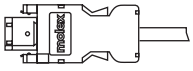

(3) Encoder-end Connector

(a) Connector for the Standard Environments

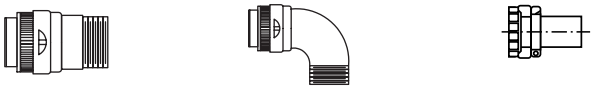

Connector on Servomotor	Encoder-end Connector Type		
	Straight Plug	L-shaped Plug	Cable Clamp
MS3102A20-29P	MS3106B20-29S	MS3108B20-29S	MS3057-12A

(b) IP67 Applicable Connector

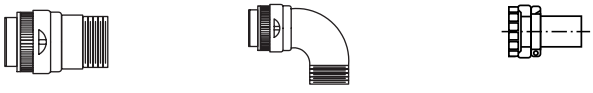

Connector on Servomotor	Encoder-end Connector Type			
	Straight Plug	L-shaped Plug	Cable Clamp	Applicable Cable Range in mm (in)
97F3102E20-29P	JA06A-20-29S -J1-EB *	JA08A-20-29S -J1-EB *	JL04-2022CKE(09) *	ϕ6.5 (ϕ0.26) to ϕ9.5 (ϕ0.37)
			JL04-2022CKE(12) *	ϕ9.5 (ϕ0.37) to ϕ13 (ϕ0.51)
			JL04-2022CKE(14) *	ϕ12.9 (ϕ0.51) to ϕ15.9 (ϕ0.63)

* Manufactured by Japan Aviation Electronics Industry, Ltd.

(4) Encoder Cable Specifications

Cable Type	JZSP-CMP09-□□	JZSP-CMP19-□□
Cable Length	20 m (65.62 ft) max.	50m (164.04 ft) max.
Basic Specifications	T/20276-SB AWG22 × 2C+AWG24 × 2P	T/20276-SB AWG16 × 2C+AWG26 × 2P
Finished Dimension	ϕ6.5 mm (ϕ0.26 in)	ϕ6.8 mm (ϕ0.27 in)
Internal Configuration and Lead Colors	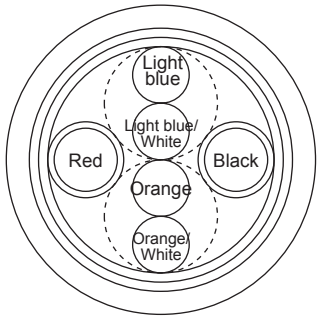	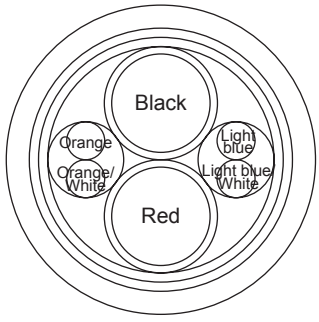
Yaskawa Standard Specifications (Standard Length)	5 m (16.40 ft), 10 m (32.81 ft), 15 m (49.21 ft), 20 m (65.62 ft)	30 m (98.43 ft), 40 m (131.23 ft), 50 m (164.04 ft)

(5) Encoder Plug Connector Pin Arrangement

17-bit Absolute Encoder Connection Specifications

Pin No.	Signal	Lead Color	Pin No.	Signal	Lead Color
A	–	–	K	–	–
B	–	–	L	–	–
C	PS	Light blue	M	–	–
D	/PS	White/ Light blue	N	–	–
E	–	–	P	–	–
F	–	–	R	–	–
G	PG0V	Black	S	BAT(–)	White/ Orange
H	PG5V	Red	T	BAT(+)	Orange
J	FG (Frame Ground) Shield wire				

17-bit Incremental Encoder Connection Specifications

Pin No.	Signal	Lead Color	Pin No.	Signal	Lead Color
A	–	–	K	–	–
B	–	–	L	–	–
C	PS	Light blue	M	–	–
D	/PS	White/ Light blue	N	–	–
E	–	–	P	–	–
F	–	–	R	–	–
G	PG0V	Black	S	–	–
H	PG5V	Red	T	–	–
J	FG (Frame Ground) Shield wire				

5.6 Flexible Cables

(1) Life of Flexible Cable

The flexible cable supports 10,000,000 or more operations of bending life with the recommended bending radius R = 90 mm (3.54 in) under the following test conditions.

- Conditions

1. Repeat moving one end of the cable forward and backward for 320 mm (12.60 in) with using the test equipment shown in the following.
2. Connect the lead wires in parallel, and count the number of cable return motion times until a lead wire is disconnected. Note that one reciprocating is counted as one test.

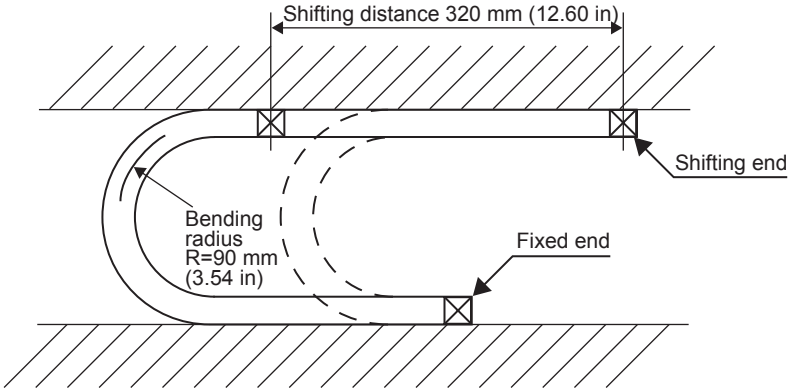

Note: 1. The life of flexible cable differs largely depending on the amount of mechanical shocks, mounting to the cable, and fixing methods. The life of flexible cable is limited under the specified conditions.
2. The life of flexible cable indicates the number of bending times in which lead wires are electrically conducted and by which no cracks and damages that affects the performance of cable sheathing are caused. Disconnecting the shield wire is not taken into account.

(2) Wiring Precautions

Even if the recommended bending radius R is respected in the mechanical design, incorrect wiring may cause the early disconnection. Observe the following precautions when wiring.

(a) Cable twisting

Straighten the flexible cables wiring.

Twisted cables causes the early disconnection. Check the indication on the cable surface to make sure that the cable is not twisted.

(b) Fixing method

Do not fix the moving points of the flexible cable, or stress on the fixed points may cause early disconnection. Fix the cable at the minimum number of points.

(c) Cable length

If the cable length is too long, it may cause the cable's sagging. Besides the cable length is too short, it may cause the excessive tension on the fixed points that will cause the early disconnection. Use a flexible cable with the optimum length.

(d) Interference between cables

Avoid interference between cables.

Interference limits the motion of flexible cable, which causes early disconnection. Keep enough distance between cables, or provide a partition when wiring.

5.7 I/O Signal Cables for CN1 Connector

5.7.1 Standard Cables

For the connection diagram, refer to *5.7.3 Connection Diagram*.

(1) Cable Types

Cable Type	Cable Length (L)
JZSP-CKI01-1	1 m (3.28 ft)
JZSP-CKI01-2	2 m (6.56 ft)
JZSP-CKI01-3	3 m (9.84 ft)

(2) Dimensional Drawing

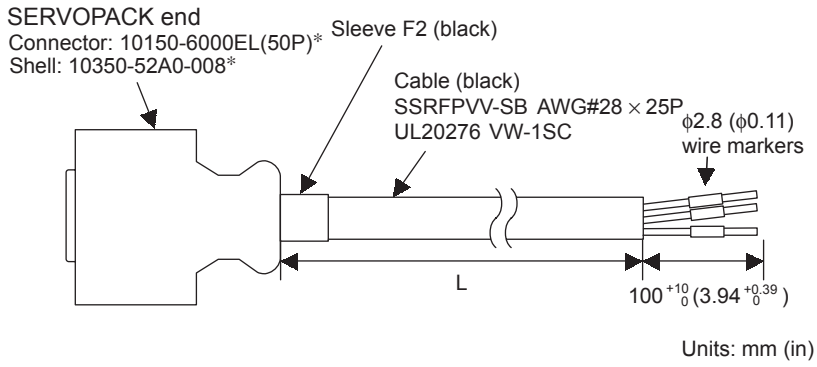

* Manufactured by Sumitomo 3M Ltd.

5.7.2 Connector Type and Cable Size

Use the following connector and wire when assembling the cable. The CN1 connector includes a set of case and a connector.

Connector Type	Case		Connector	
	Type	Qty	Type	Qty
JZSP-CKI9	10350-52A0-008*	1 set	10150-3000VE*	1

* Manufactured by Sumitomo 3M Ltd.

(1) Dimensional Drawing of Case

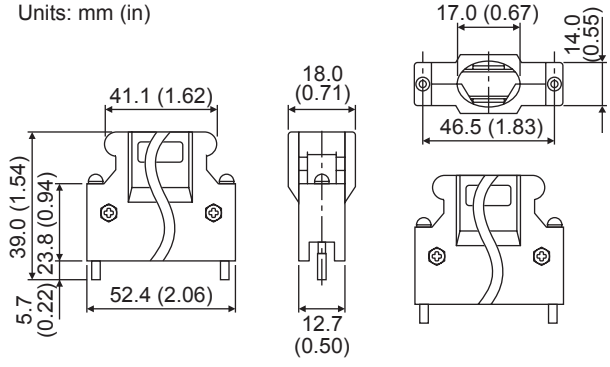

(2) Dimensional Drawing of Connector

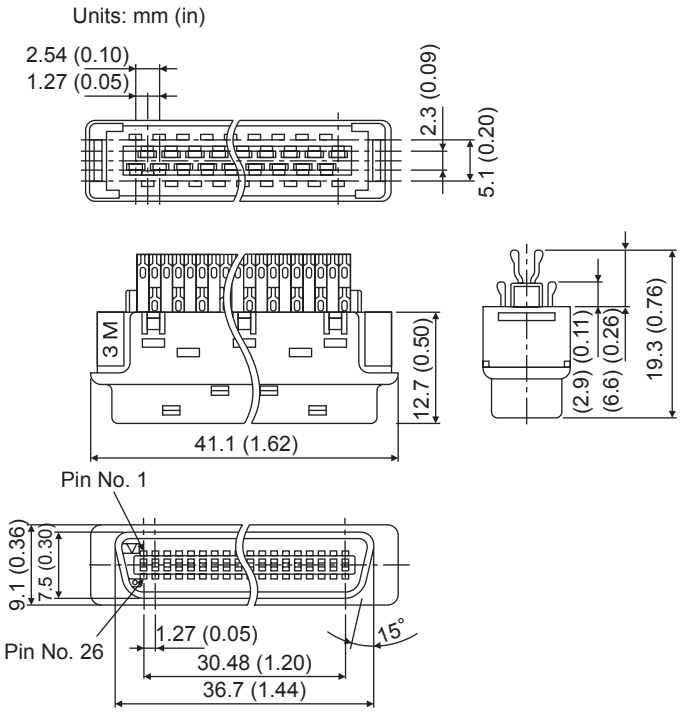

(3) Cable Size

Item	Specifications
Cable	Use twisted-pair or twisted-pair shielded wire.
Applicable Wires	AWG24, 26, 28, 30
Finished Dimension	ϕ16 mm (ϕ0.63 in) or less

5.7.3 Connection Diagram

SERVOPACK end

Pin No.	Signal	Lead Color	Marking		Lead Marker No.
			Color	Dots	
1	SG	Orange	Red	1	1
2	SG	Orange	Black	1	2
3	–	Gray	Red	1	3
4	SEN	Gray	Black	1	4
5	V-REF	White	Red	1	5
6	SG	White	Black	1	6
7	PULS	Yellow	Red	1	7
8	/PULS	Yellow	Black	1	8
9	T-REF	Pink	Red	1	9
10	SG	Pink	Black	1	10
11	SIGN	Orange	Red	2	11
12	/SIGN	Orange	Black	2	12
13	–	Gray	Red	2	13
14	/CLR	Gray	Black	2	14
15	CLR	White	Red	2	15
16	–	White	Black	2	16
17	–	Yellow	Red	2	17
18	–	Yellow	Black	2	18
19	PCO	Pink	Red	2	19
20	/PCO	Pink	Black	2	20
21	BAT(+)	Orange	Red	3	21
22	BAT(-)	Orange	Black	3	22
23	–	Gray	Red	3	23
24	–	Gray	Black	3	24
25	/V-CMP+	White	Red	3	25
26	/V-CMP-	White	Black	3	26
27	/TGON+	Yellow	Red	3	27
28	/TGON-	Yellow	Black	3	28
29	/S-RDY+	Pink	Red	3	29
30	/S-RDY-	Pink	Black	3	30
31	ALM+	Orange	Red	4	31
32	ALM-	Orange	Black	4	32
33	PAO	Gray	Red	4	33
34	/PAO	Gray	Black	4	34
35	PBO	White	Red	4	35
36	/PBO	White	Black	4	36
37	ALO1	Yellow	Red	4	37
38	ALO2	Yellow	Black	4	38
39	ALO3	Pink	Red	4	39
40	/S-ON	Pink	Black	4	40
41	/P-CON	Orange	Red	5	41
42	P-OT	Orange	Black	5	42
43	N-OT	Gray	Red	5	43
44	/ALM-RST	Gray	Black	5	44
45	/P-CL	White	Red	5	45
46	/N-CL	White	Black	5	46
47	+24V-IN	Yellow	Red	5	47
48	–	Yellow	Black	5	48
49	–	Pink	Red	5	49
50	–	Pink	Black	5	50
Case	Shield				

Host controller end

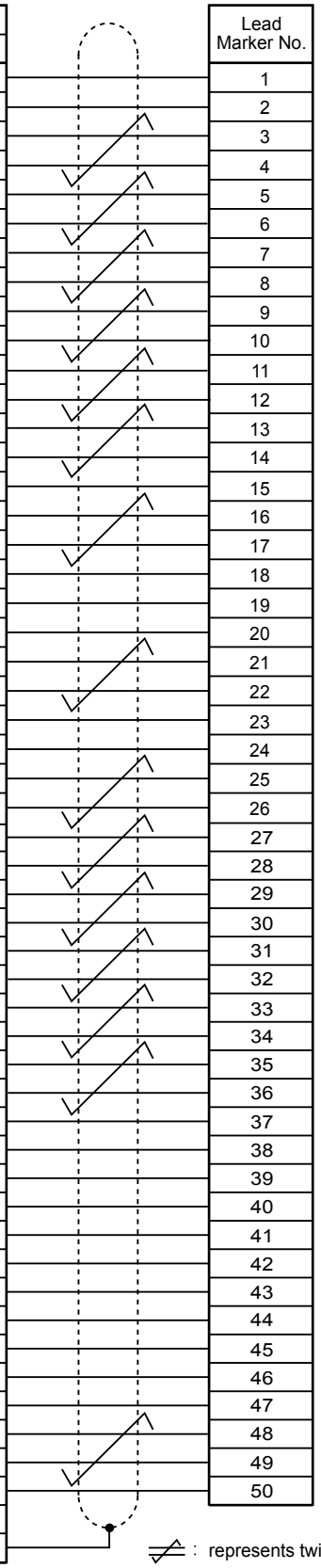

: represents twisted-pair wires.

5.8 Peripheral Devices

5.8.1 Cables for Connecting Personal Computers

(1) For 25-pin Connector Cable for NEC PC-98 Series PC

(a) Cable Type: JZSP-CMS01

(b) Dimensional Drawing

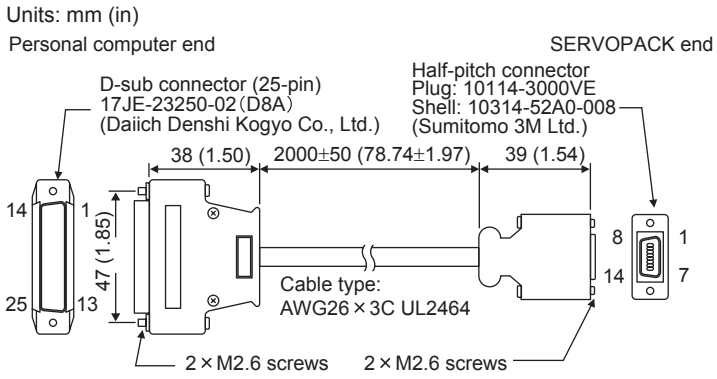

Personal computer end

Signal	Pin No.
RXD	3
TXD	2
0 V	7
RTS	4
CTS	5
FG	1

Shield wire

SERVOPACK end

Pin No.	Signal
2	/TXD
4	/RXD
14	0 V
–	–
–	–
Case	FG

(2) D-sub, 9-pin Connector Cable for IBM PC Compatible

(a) Cable Type: JZSP-CMS02

(b) Dimensional Drawing

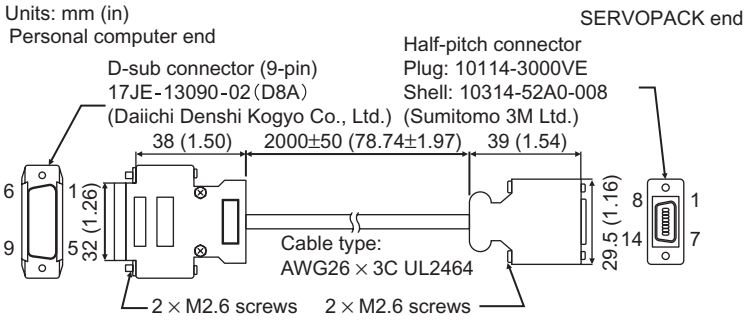

Personal computer end

Signal	Pin No.
RXD	2
TXD	3
0 V	5
RTS	7
CTS	8
FG	Case

Shield wire

SERVOPACK end

Pin No.	Signal
2	/TXD
4	/RXD
14	0 V
–	–
–	–
Case	FG

5

(3) 14-pin Half-pitch Connector Cable for NEC PC-98 Series PC

(a) Cable Type: JZSP-CMS03

(b) Dimensional Drawing

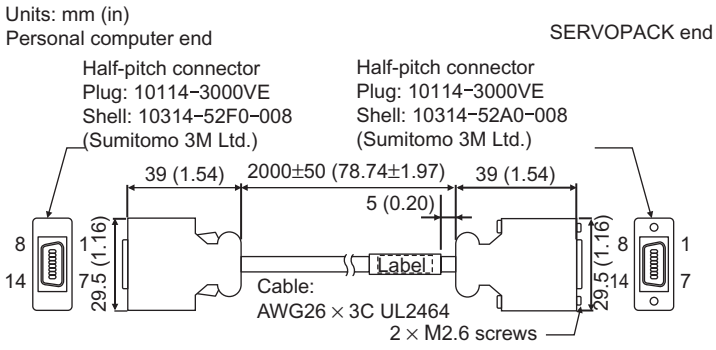

Personal computer end

Signal	Pin No.
RXD	1
TXD	9
RTS	10
CTS	4
GND	14
FG	12
FG	Case

SERVOPACK end

Pin No.	Signal
2	/TXD
4	/RXD
–	–
–	–
14	GND
Case	FG

Shield wire

5.8.2 Digital Operator

(1) Model JUSP-OP02A-2 with a 1m (3.28 ft)-connection Cable

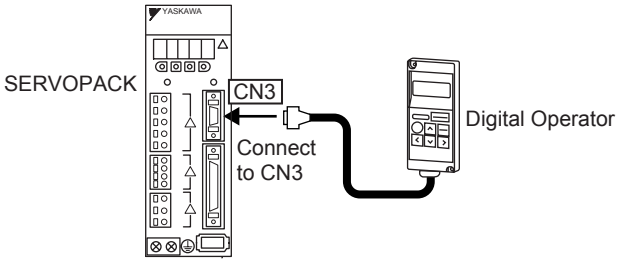

(2) Dimensional Drawing

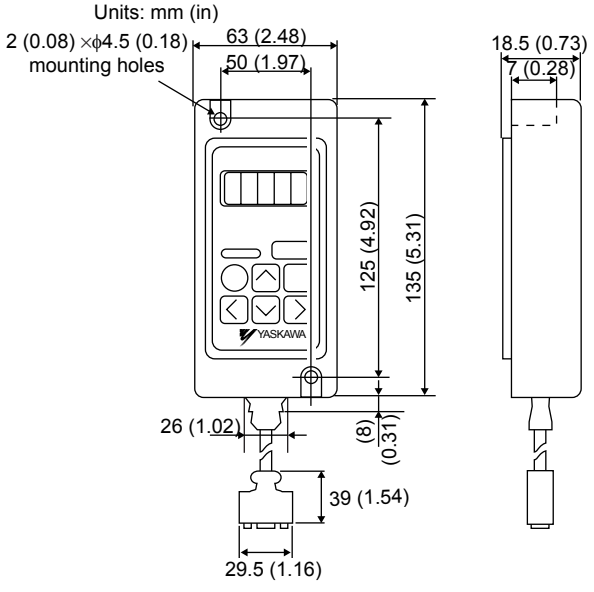

(3) Other Types of the Applicable Connection Cables: JZSP-CMS00-□

The following cables are applicable for longer distance connection.

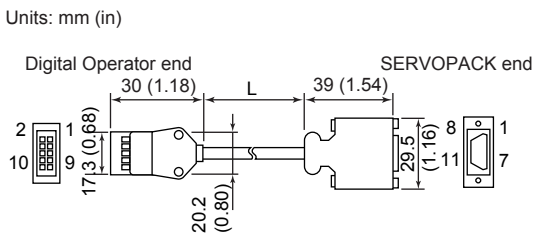

Cable Type	Cable Length (L)
JZSP-CMS00-1	1 m (3.28 ft)
JZSP-CMS00-2	1.5 m (4.92 ft)
JZSP-CMS00-3	2 m (6.56 ft)

5.8.3 Cables for Analog Monitor

(1) Cable Type: JZSP-CA01 (DE9404559)

Connect the specified cables to CN5 connector for monitoring the analog monitor signals. For details, refer to *9.5 Analog Monitor*.

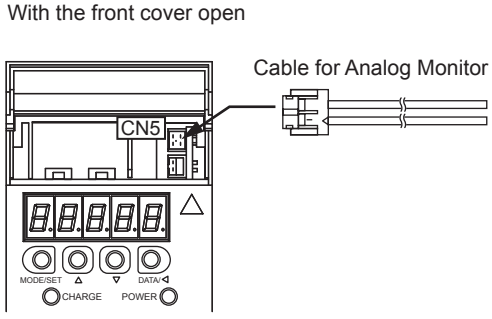

INFO

Specify the cable type either JZSP-CA01 or DE9404559 when ordering the cable for analog monitor.

(2) Dimensional Drawing

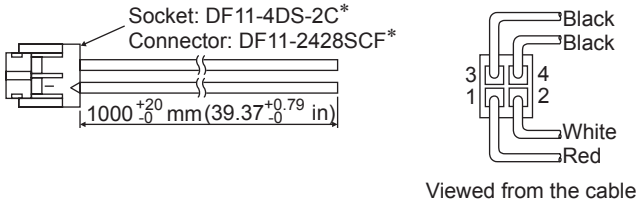

* Manufactured by Hirose Electric Corporation.

(3) Specifications

Pin No.	Cable Color	Signal	Monitoring Item
1	Red	Analog Monitor 2	Motor speed: 1V/1000 min^{-1}
2	White	Analog Monitor 1	Torque reference: 1V/100% rated torque
3 and 4	Black (2 cables)	GND (0 V)	–

Note: The above monitoring items are the factory settings. The monitoring items can be changed by setting the parameter Pn003. Refer to *9.5 Analog Monitor*.

5.8.4 Connector Terminal Block Converter Unit

(1) Model: JUSP-TA50P

The connection between the connector terminal block converter and the SERVOPACK is shown below.

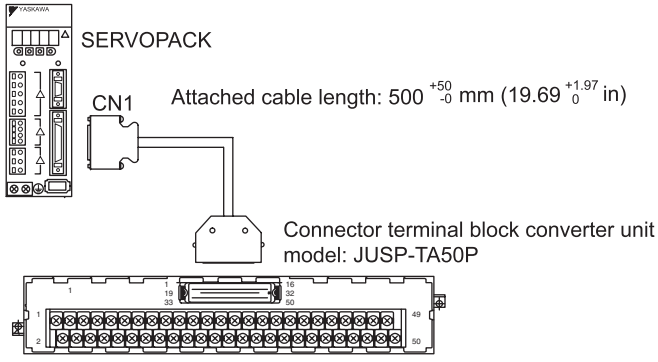

(2) Dimensional Drawings of Terminal Block

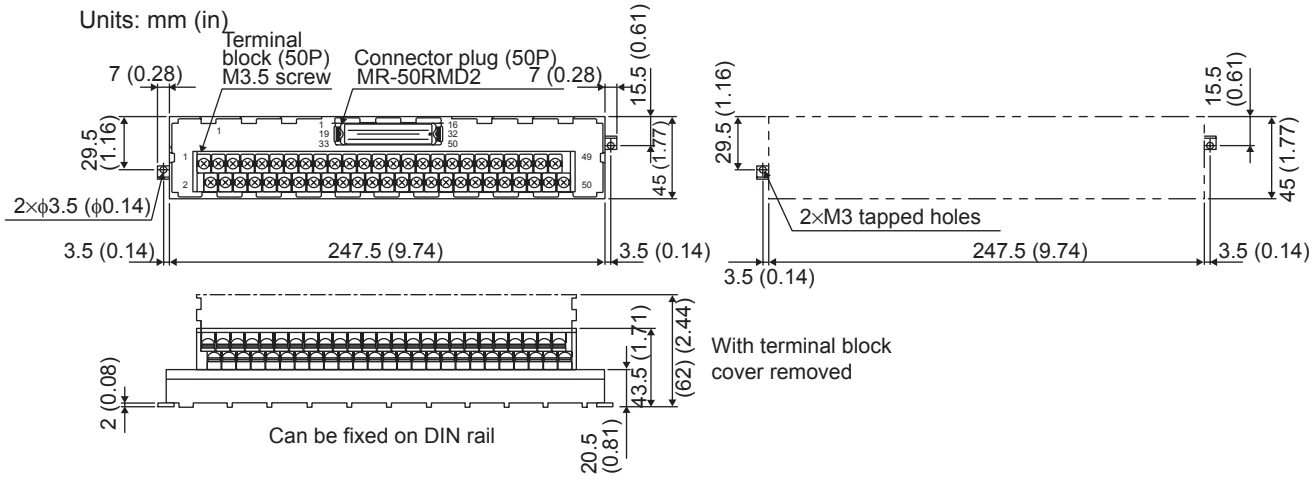

(3) Dimensional Drawing of Cable

Units: mm (in)

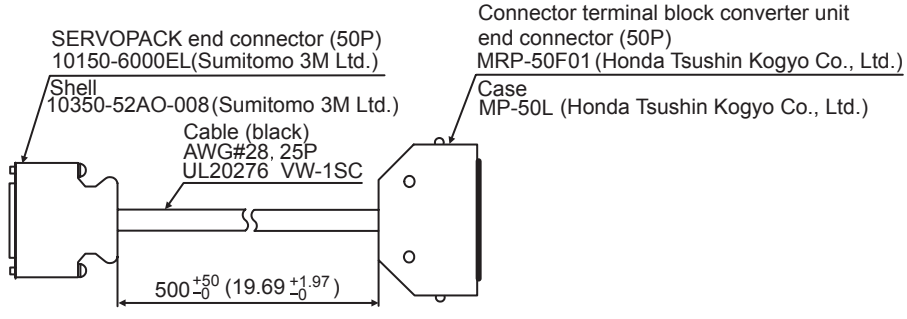

5.8.5 Brake Power Supply Unit

(1) Model: LPSE-2H01, LPDE-1H01

Manufactured by Yaskawa Controls Co., Ltd.

- 200 V input: LPSE-2H01
- 100 V input: LPDE-1H01

(2) Specifications

- Rated output voltage: 90 VDC
- Maximum output current: 1.0 ADC
- Lead wire length: 500 mm (19.69 in) each
- Maximum ambient temperature: 60°C (140 °F)
- Lead wires: Color coded. Refer to the table below.

AC Input End		Brake End
100 V	200 V	
Blue/White	Yellow/White	Red/Blue

(3) Dimensional Drawing

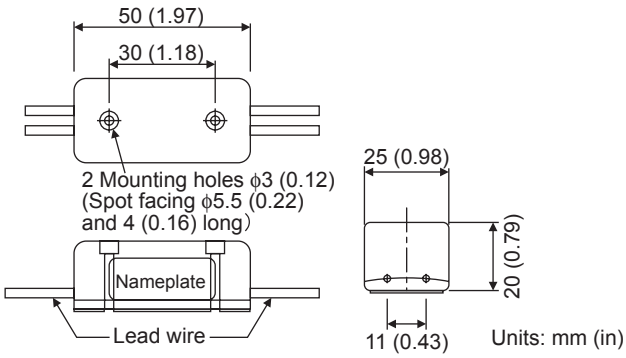

(4) Internal Circuits

The brake power supply circuit can be opened and closed either on AC or DC side. However, if the wiring distance on DC side is too long, the brake circuit may not operate normally due to the influence of switching noises. When switching the circuit on AC side, install a surge suppressor model CR50500BL for the brake power supply near the brake coil to reduce the influence of switching noises.
When switching the circuit on DC side, the influence of the switching noise is minimal, even without installing a surge suppressor. However, the surge voltage at switching may damage the brake coil. Install a surge suppressor near the brake coil to prevent the damage to the brake coil in addition to the built-in surge suppressor.

(a) Internal Circuit for 200 VAC
Brake Power Supply Model: LPSE-2H01

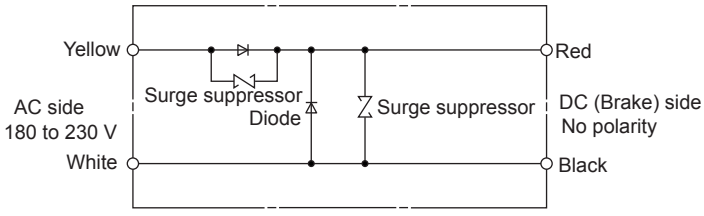

(b) Internal Circuit for 100 VAC Brake Power Supply Model: LPDE-1H01

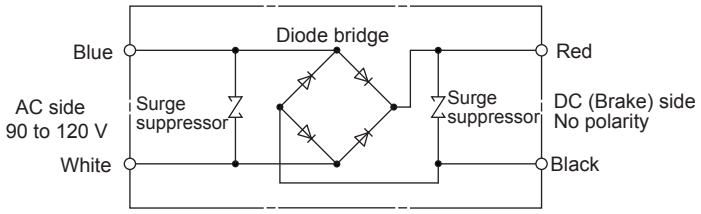

■ Noise Filter for Brake Power Supply

Use the following noise filter at the brake power input for 400 W or less servomotors with holding brakes.

Model: FN2070-6/07 (Manufactured by Shaffner Electronic.)

Refer to *5.8.10 Noise Filter* for the dimensional drawing.

5.8.6 External Regenerative Resistor

Regenerative resistors for SERVOPACKs are internally or externally mounted as shown in the table below. Regenerative resistors can be externally mounted on all SERVOPACKs. Connect an external regenerative resistor to the SERVOPACK if regenerative energy exceeds the capacity of the SERVOPACK.
If a regenerative resistor is to be mounted externally, the jumper between B2 and B3 for the internal regenerative resistor must be removed. Refer to *6.5 Connecting Regenerative Resistors* for the selection.
No built-in regenerative resistor is provided to 6 kW or more SERVOPACKs. Be sure to prepare the externally mounted regenerative resistor.
The following table shows examples of regenerative resistors.

Applicable SERVOPACK		Specifications for a Regenerative Resistor Mounted in a SERVOPACK		Min. Allowable Resistance (Ω)
		Resistance (Ω)	Capacity (W)	
Single-phase 100 V	SGDH-A3BE	–	–	40
	SGDH-A5BE			
	SGDH-01BE			
	SGDH-02BE			
Single-phase 200 V	SGDH-A3AE	–	–	40
	SGDH-A5AE			
	SGDH-01AE			
	SGDH-02AE			
	SGDH-04AE			
Single-phase 220 V	SGDH-08AE-S	50	60	40
	SGDH-15AE-S	25	140	20
Three-phase 200 V	SGDH-05AE	50	60	40
	SGDH-08AE			
	SGDH-10AE			
	SGDH-15AE	30	70	20
	SGDH-20AE	25	140	12
	SGDH-30AE	12.5	140	12
	SGDH-50AE	8	280	8
	SGDH-60AE	(6.25) *1	(880) *1	5.8
	SGDH-75AE	(3.13)*2	(1760) *2	2.9
	SGDH-1AAE			
	SGDH-1EAE			
Three-phase 400 V	SGDH-05DE	108	70	73
	SGDH-10DE			
	SGDH-15DE			
	SGDH-20DE	45	140	44
	SGDH-30DE			
	SGDH-50DE	32	180	28
	SGDH-60DE	(18)*3	(880) *3	18
	SGDH-75DE			14.2
	SGDH-1ADE	(14.25) *4	(1760) *4	14.2
	SGDH-1EDE			

* 1. The values in parentheses are for the optional JUSP-RA04 Regenerative Resistor Unit.
* 2. The values in parentheses are for the optional JUSP-RA05 Regenerative Resistor Unit.
* 3. The values in parentheses are for the optional JUSP-RA18 Regenerative Resistor Unit.
* 4. The values in parentheses are for the optional JUSP-RA19 Regenerative Resistor Unit.

The external regenerative resistor must be purchased by customers. Refer to the table below for selecting an external regenerative resistor. Refer to *6.5 Connecting Regenerative Resistors* for the connection.

(1) References for External Regenerative Resistor

Regenerative Resistor Model	Specifications	Manufacturer
RH120	70 W, 1 to 100 Ω	Iwaki Wireless Research Institute.
RH150	90 W, 1 to 100 Ω	
RH220	120 W, 1 to 100 Ω	
RH300C	200 W, 1 to 10 kΩ	
RH500	300 W, 1 to 30 Ω	

(2) Model Designation

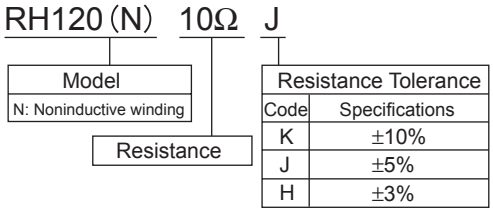

(3) Specifications

Resistance Tolerance	K: ± 10%, J: ± 5%, H: ± 3%
Temperature Resistance Characteristics	± 400 PPM / °C (less than 20Ω), ± 260 PPM / °C (20Ω or more)
Withstand Voltage	2000 VAC/min. ΔR: ± (0.1% + 0.05Ω)
Insulation Resistance	500 VDC, 20 MΩ or more
Short-time Overload	When 10 times of rated power is applied for five seconds, ΔR: ±(2% + 0.05Ω)
Life	1000 hours of repeating the operation ON for 90 minutes and OFF for 30 minutes, ΔR: ±(5% + 0.05Ω)
Heat Resistance	Not ignite after having applied 10 times of rated electric power for one minute
Operating Temperature	-25 to 150°C (-13 to 302 °F)

(4) Dimensional Drawings

RH120/150/220

Units: mm (in)

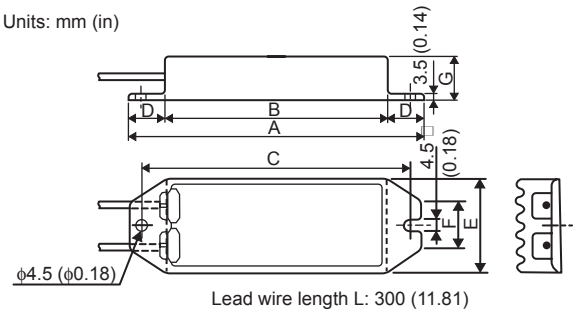

Lead wire length L: 300 (11.81)

Model	Rated Power	Resistance
RH120	70 W	1 to 100 Ω
RH150	90 W	1 to 100 Ω
RH220	120 W	1 to 100 Ω

Dimensions	A	B	C	D	E	F	G
RH120	182 (7.17)	150 (5.91)	172 (6.77)	16 (0.63)	42 (1.65)	22 (0.87)	20 (0.79)
RH150	212 (8.35)	180 (7.09)	202 (7.95)	16 (0.63)	44 (1.73)	24 (0.94)	30 (1.18)
RH220	230 (9.06)	200 (7.87)	220 (8.66)	15 (0.59)	60 (2.36)	24 (0.94)	20 (0.79)

RH220B

Units: mm (in)

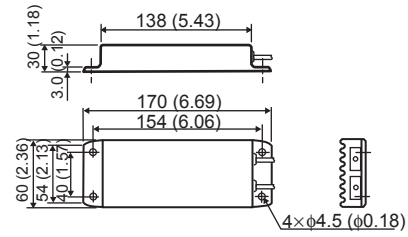

Lead wire length L: 500 (19.69)
Rated power: 120 W
Resistance: 1 to100 Ω

RH300C

Units: mm (in)

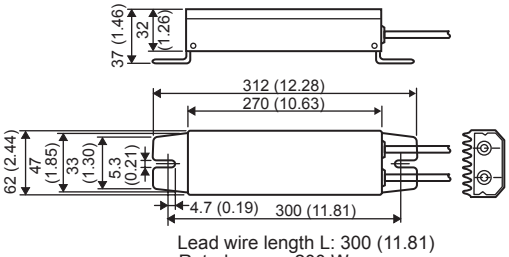

Lead wire length L: 300 (11.81)
Rated power: 200 W
Resistance: 1 to 10 kΩ

RH500

Units: mm (in)

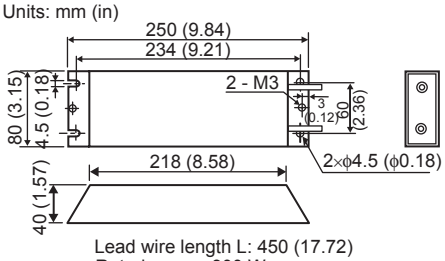

Lead wire length L: 450 (17.72)
Rated power: 300 W
Resistance: 1 to 30 Ω

5.8.7 Regenerative Resistor Unit

(1) Models

The SERVOPACKs with a capacity of 6.0 kW or more do not have a built-in regenerative resistor. The following regenerative resistor unit is required according to the SERVOPACK model.

SERVOPACK Model	Regenerative Resistor Unit Model	Specifications	Allowable Power Loss
SGDH-60AE	JUSP-RA04	6.25 Ω , 880 W	180 W
SGDH-75AE to -1EAE	JUSP-RA05	3.13 Ω , 1760 W	350 W
SGDH-60DE to -75DE	JUSP-RA18	18 Ω , 880 W	180 W
SGDH-1ADE to -1EDE	JUSP-RA19	14.25 Ω , 1760 W	350 W

(2) Dimensional Drawings

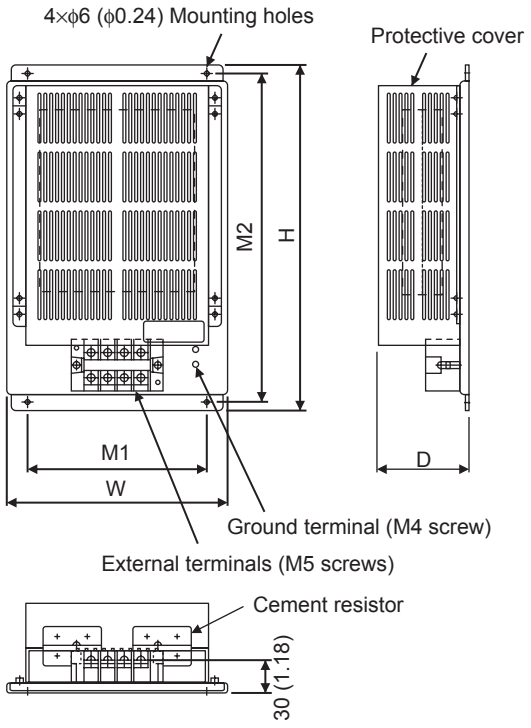

Units: mm (in)

Model	W	H	D	M1	M2	Approx. Mass kg (lb)
JUSP-RA04	220 (8.66)	350 (13.78)	92 (3.62)	180 (7.09)	335 (13.19)	4 (8.82)
JUSP-RA05	300 (11.81)	350 (13.78)	95 (3.74)	250 (9.84)	335 (13.19)	7 (15.43)
JUSP-RA18	220 (8.66)	350 (13.78)	92 (3.62)	180 (7.09)	335 (13.19)	4 (8.82)
JUSP-RA19	300 (11.81)	350 (13.78)	95 (3.74)	250 (9.84)	335 (13.19)	7 (15.43)

5.8.8 Absolute Encoder Battery

When using an absolute encoder, a backup battery is required to prevent the position data from being lost at power OFF. Install one of the following absolute encoder batteries.
There are two types of battery: Battery to be mounted on the SERVOPACK and battery to be connected to the host controller.

⃠ PROHIBITED

- Install the absolute encoder battery on either the SERVOPACK or the host controller.
  Installing the batteries both on the SERVOPACK and host controller configures a loop in the circuit between two batteries, which damages the circuit.

(1) Battery Mounted on SERVOPACK

(a) Model

SERVOPACK Capacity	Battery Model
30 W to 5.0 kW	JZSP-BA01
6.0 to 15.0 kW	JZSP-BA01-1

(b) Dimensional Drawing

- JZSP-BA01

Lithium battery ER3V
3.6 V 1000 mAh
Manufactured by Toshiba Battery Co., Ltd.

Units: mm (in)

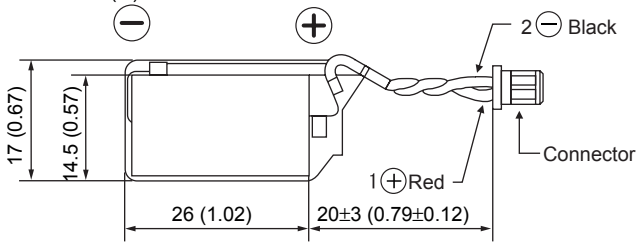

- JZSP-BA01-1

Lithium battery ER3V
3.6 V 1000 mAh
Manufactured by Toshiba Battery Co., Ltd.

Units: mm (in)

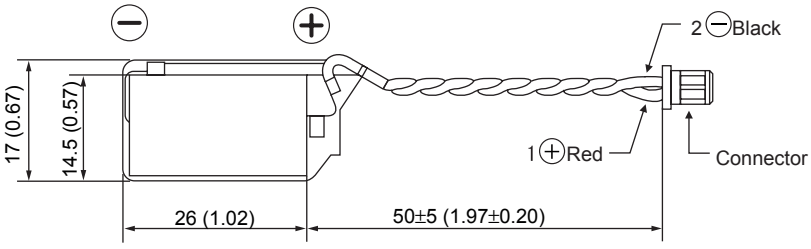

(2) Battery Connected to the Host Controller

When connecting the battery to the host controller, select the battery in accordance with the specifications of the host controller.
Use the battery ER6 VC3 or the equivalent:

3.6 V 2000 mAh manufactured by Toshiba Battery Co., Ltd.

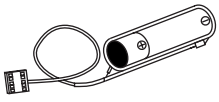

5.8.9 Molded-case Circuit Breaker (MCCB)

(1) Model: MN50-CP

The recommended product is manufactured by Mitsubishi Electric Corporation. Refer to the manufacturer's instruction manual for details.

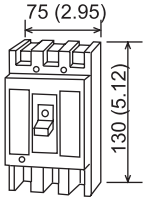

Units: mm (in)

(2) Specifications

Phase	3ϕ3W					
Number of Poles	3					
Rated Voltage	Common for 100 V/200 V/415 VAC					
Rated Current and Motor Rated Capacity under Basic Ambient Temperature of 40°C (104 °F)	Rated Current A	kW		Rated Current A	kW	
		200 V	415 V		200 V	415 V
	45	11	22	(8)	-	3.7
	(40)	-	18.5	7.1	1.5	-
	32	7.5	15	(5)	-	2.2
	25	5.5	11	4	0.75	1.5
	16	3.7	7.5	2.5	0.4	-
	(12)	-	5.5	(2)	-	0.75
	10	2.2	-	1.4	0.2	-
Rated Current Sensitivity	30 mA, 100 (200 or 500 switchable)					
Operating Time	Within 0.1 s					
Ground Fault Display Method	Mechanical button					
Rated Interrupting Current JIS C8371	415 VAC	2.5 kA				
	200 VAC	5 kA				
	100 VAC	5 kA				

(3) Precautions

IMPORTANT

■ Circuit Breakers

- Select a breaker for inverters.
- High-frequency current leaks from the servomotor armature because of switching operations inside the SERVOPACK.

(a) Maximum Input Current

- The instantaneous maximum output of SERVOPACK is approximately 3 times of the rated output for maximum 3 seconds. Accordingly, select a circuit breaker whose operating time is 5 seconds or more at 300% of SERVOPACK rated current.
  The general-purpose and low-speed acting molded-case circuit breakers are applicable.
- The power supply capacity per SERVOPACK when using a servomotor is described in *2.6.2 Molded-case Circuit Breaker and Fuse Capacity.* Select a circuit breaker with the capacity larger than the effective load current (when using multiple SERVOPACKs) calculated from the total power supply capacity.
- The power consumption of other controllers must be considered when selecting a circuit breaker.

(b) Inrush Current

- Refer to *2.6.2 Molded-case Circuit Breaker and Fuse Capacity* for SERVOPACK inrush current.
- The allowable inrush current for a low-speed acting circuit breaker is approximately 10 times of the rated current for 0.02 seconds.
- When turning ON multiple SERVOPACKs simultaneously, select a molded-case circuit breaker with the allowable current for 20 ms larger than the total inrush current shown in *2.6.2 Molded-case Circuit Breaker and Fuse Capacity.*

5.8.10 Noise Filter

The noise filters model FN and FS manufactured by Schaffner Electronic and FMAC manufacture by Timonta AG are recommended. Contact Yaskawa Controls Co., Ltd.
Select one of the following noise filters according to SERVOPACK capacity. For more details, refer to *2.6.3 Noise Filters, Magnetic Contactors, Surge Suppressors and DC Reactors*.

Refer to *6.1.3 Typical Main Circuit Wiring Examples* for the connection method.

(1) Single-phase, 100/200 V

Model	FN2070 -6/07	FN2070 -10/07	FN2070-16/07	FN350-30/33
Dimensional Drawings	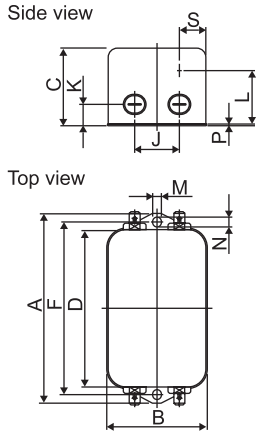		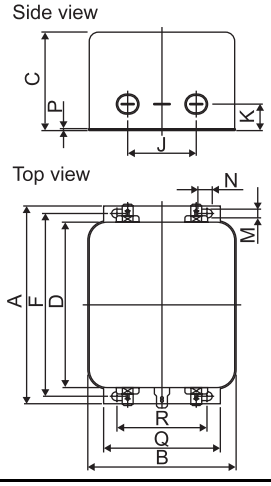	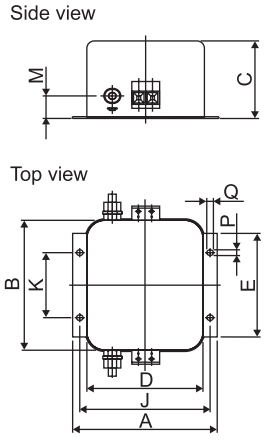
	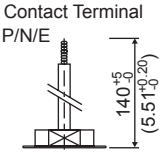			

Model		FN2070 -6/07	FN2070 -10/07	FN2070-16/07	FN350-30/33	
External Dimensions in mm (in)	Symbol	Dimensions				Dimensions
	A	113.5 ± 1 (4.47± 0.04)	156 ± 1 (6.14± 0.04)	119 ± 0.5 (4.69± 0.02)	A	105 ± 0.5 (4.13± 0.02)
	B	57.5 ± 1 (2.26± 0.04)		85.5 ± 1 (3.37 ± 0.04)	B	99.5 ± 0.5 (3.92± 0.02)
	C	45.4 ± 1.2 (1.79± 0.05)		57.6 ± 1 (2.27± 0.04)	C	57 ± 1 (2.24± 0.04)
	D	94 ± 1 (3.70± 0.04)	130.5 ± 1 (5.14± 0.04)	98.5 ± 1 (3.88± 0.04)	D	84.5 ± 1 (3.33± 0.04)
	F	103 ± 0.3 (4.06± 0.01)	143 ± 0.3 (5.63± 0.01)	109 ± 0.3 (4.29± 0.01)	E	79 ± 0.5 (3.11± 0.02)
	J	25 ± 0.2 (0.98± 0.008)		40 ± 0.2 (1.57± 0.008)	J	95 ± 0.2 (3.74± 0.008)
	K	8.4 ± 0.5 (0.33± 0.02)		8.6 ± 0.5 (0.34± 0.02)	K	51 ± 0.1 (2.01± 0.004)
	L	32.4 ± 0.5 (1.28± 0.02)		–	L	–
	M	4.4 ± 0.1 (0.17± 0.004)	5.3 ± 0.1 (0.21± 0.004)	4.4 ± 0.1 (0.17± 0.004)	M	19 ± 0.5 (0.75± 0.02)
	N	6 ± 0.1 (0.24± 0.004)		7.4 ± 0.1 (0.29± 0.004)	N	–
	P	0.9 ± 0.1 (0.04± 0.004)		1.2 ± 0.1 (0.05± 0.004)	P	4.4 ± 0.1 (0.17± 0.004)
	Q	–		66 ± 0.3 (2.60± 0.01)	Q	6 ± 0.1 (0.24± 0.004)
	R	–		51 ± 0.2 (2.01± 0.008)	R	–
	S	38 ± 0.5 (1.50± 0.02)		–	S	–
Specifications		250 VAC, 6 A	250 VAC, 10 A	250 VAC, 16 A	250 VAC, 30 A	
Applicable SERVOPACK SGDH-	Single-phase 100 V	A3BE A5BE 01BE	02BE	–	–	
	Single-phase 200 V	A3AE A5AE 01AE 02AE	04AE	–	–	
	Single-phase 220 V	–	–	08AE-S	15AE-S	
Manufacturer		Schaffner Electronic				

(2) Three-phase, 200/400 V

Select one of the following noise filters according to SERVOPACK capacity. For more details, refer to *2.6.3 Noise Filters, Magnetic Contactors, Surge Suppressors and DC Reactors*.

Refer to *6.1.3 Typical Main Circuit Wiring Examples* for the connection method.

(a) FN Series

Model		FN258L-7/07	FN258L-16/07	FN258L-30/07
Dimensional Drawings		Side view 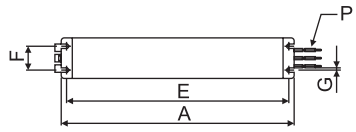 	Front and side views 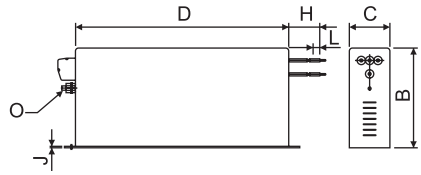 	
External Dimensions in mm (in)	Symbol	Dimensions		
	A	255 ± 1 (10.04± 0.04)	305 ± 1 (12.01± 0.04)	335 ± 1 (13.19± 0.04)
	B	126 ± 0.8 (4.96± 0.03)	142 ± 0.8 (5.59± 0.03)	150 ± 1 (5.91± 0.04)
	C	50 ± 0.6 (1.97± 0.02)	55 ± 0.6 (2.17 ± 0.02)	60 ± 0.6 (2.36± 0.02)
	D	225 ± 0.8 (8.86± 0.03)	275 ± 0.8 (10.83± 0.03)	305 ± 1 (12.01± 0.04)
	E	240 ± 0.5 (9.45± 0.02)	290 ± 0.5 (11.42 ± 0.02)	320 ± 0.5 (12.60± 0.02)
	F	25 ± 0.3 (0.98± 0.01)	30 ± 0.3 (1.18 ± 0.01)	35 ± 0.3 (1.38± 0.01)
	G	6.5 ± 0.2 (0.26 ± 0.008)		
	H	300 ± 10 (11.81± 0.39)		400 ± 10 (15.75± 0.39)
	J	1 ± 0.1 (0.04± 0.004)		
	L	9 ± 1 (0.35± 0.04)		
	O	M5		
	P	AWG16	AWG14	AWG10
Specifications		480 VAC, 7 A	480 VAC, 16 A	480 VAC, 30 A
Applicable SERVOPACK SGDH-	Three-phase 200 V	05A	08A 10A 15A 20A	30A
	Three-phase 400 V	05DE 10DE 15DE	20DE 30DE	-
Manufacturer		Schaffner Electronic		

5

(b) FMAC Series

Model		FMAC-0934-5010	FMAC-0953-6410
Dimensional Drawings		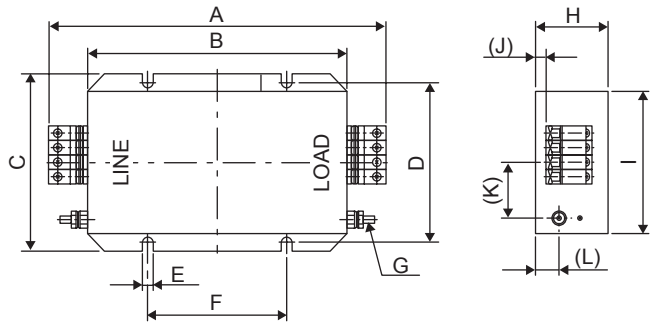	
External Dimensions in mm (in)	Symbol	Dimensions	
	A	251 (9.88)	308 (12.13)
	B	201 (7.91)	231 (9.09)
	C	151 (5.94)	151 (5.94)
	D	$135^{+0}_{-1}\left(5.31^{+0}_{-0.04}\right)$	$135^{+0}_{-1}\left(5.31^{+0}_{-0.04}\right)$
	E	6.5±0.3 (0.26±0.01)	6.5±0.3 (0.26±0.01)
	F	115±0.3 (4.53±0.01)	115±0.3 (4.53±0.01)
	G	M6	M6
	H	66 (2.60)	66 (2.60)
	I	121 (4.76)	121 (4.76)
	J	(10) (0.39)	(13) (0.51)
	K	(41) (1.61)	(45) (1.77)
	L	(17) (0.67)	(34) (1.34)
Specifications		440 VAC, 50 A	440 VAC, 64 A
Applicable SERVOPACK SGDH-	Three-phase 200 V	50AE 60AE	75AE
Manufacturer		Timonta AG	

(c) FS Series

Model		FS5559-35-33	FS5559-80-34	FS5559-150-35
Dimensional Drawings		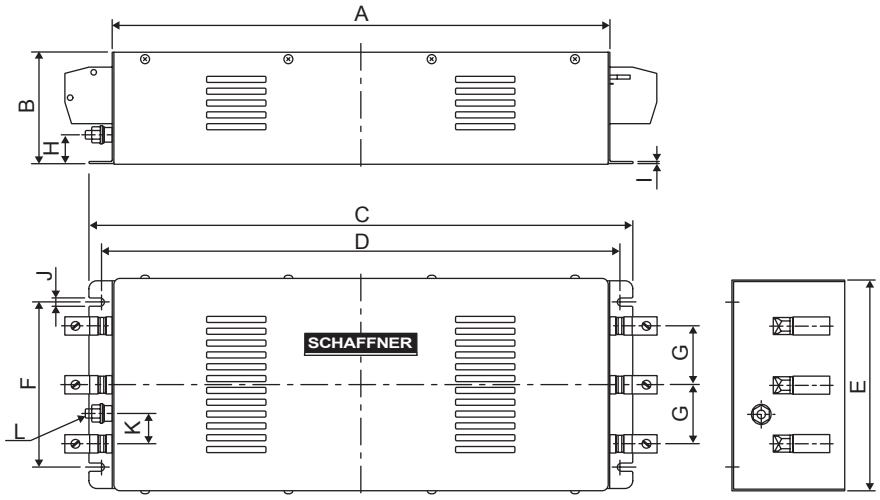		
External Dimensions in mm (in)	Symbol	Dimensions		
	A	330 (12.99)	420 (16.54)	440 (17.32)
	B	85 (3.35)	95 (3.74)	150 (5.91)
	C	370 (14.57)	460 (18.11)	480 (18.90)
	D	348 (13.70)	438 (17.24)	458 (18.03)
	E	110 (4.33)	180 (7.09)	200 (7.87)
	F	80 (3.15)	140 (5.51)	170 (6.69)
	G	30 (1.18)	50 (1.97)	50 (1.97)
	H	25 (0.98)	25 (0.98)	35 (1.38)
	I	1.5 (0.06)	1.5 (0.06)	1.5 (0.06)
	J	6.5 (0.26)	6.5 (0.26)	6.5 (0.26)
	K	25 (0.98)	25 (0.98)	25 (0.98)
	L	M6	M8	M10
Specifications		480 V, 35 A	480 V, 80 A	480 V, 150 A
Applicable SERVOPACK SGDH-	Three-phase 200 V	-	-	1AAE 1EAE
	Three-phase 400 V	50DE 60DE 75DE	1ADE 1EDE	-
Manufacturer		Schaffner Electronic		

5

5.8.11 Magnetic Contactor

(1) Model: HI-□J

The magnetic contactor is manufactured by Yaskawa Controls Co., Ltd.
A magnetic contactor is required to make the AC power supply to SERVOPACK ON/OFF sequence externally.
Be sure to attach a surge suppressor to the excitation coil of the magnetic contactor. Refer to *5.8.12 Surge Suppressor* for details of the surge suppressor.
For selecting a magnetic contactor, refer to *2.6.3 Noise Filters, Magnetic Contactors, Surge Suppressors and DC Reactors*.

(2) For Single-phase 100/200 V and Three-phase 200 V SERVOPACKs

(a) Model: HI-11J

Dimensions in mm (in)	Mounting Hole Dimensions in mm (in)	Terminal Symbols
Approx. mass: 0.25 kg (0.55 lb) 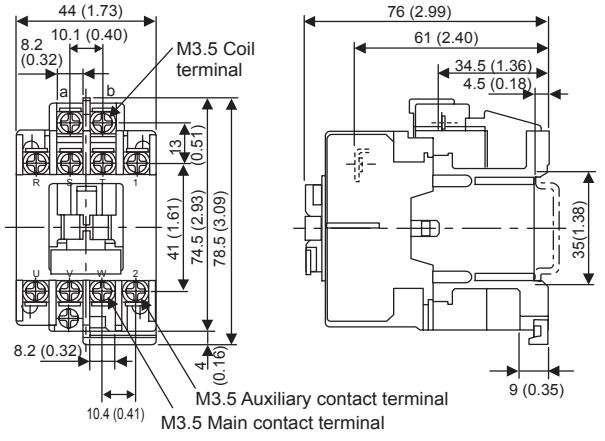	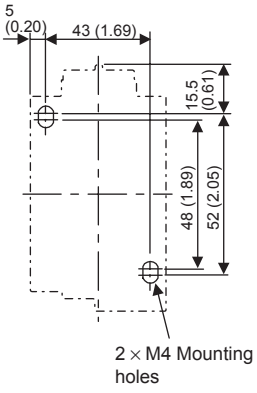	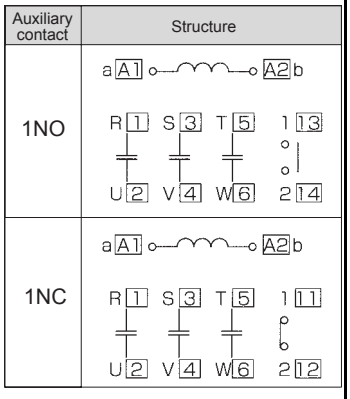

Auxiliary contact	Structure
1NO	a A1 — A2 b; R 1 S 3 T 5 1 13; U 2 V 4 W 6 2 14
1NC	a A1 — A2 b; R 1 S 3 T 5 1 11; U 2 V 4 W 6 2 12

(b) Model: HI-15J and HI-20J

Dimensions in mm (in)	Mounting Hole Dimensions in mm (in)	Terminal Symbols
Approx. mass: 0.38 kg (0.84 lb) 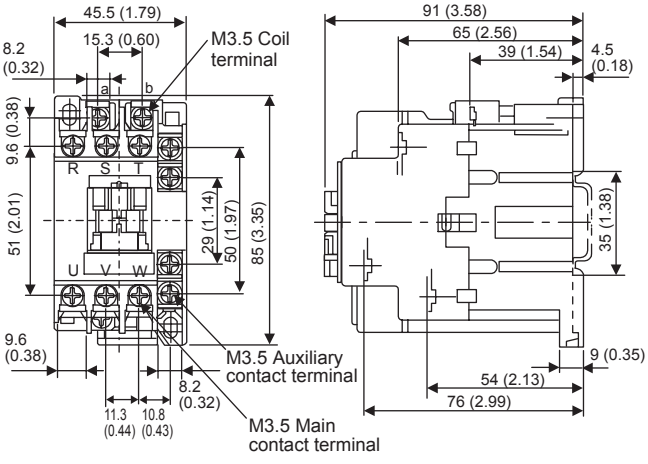	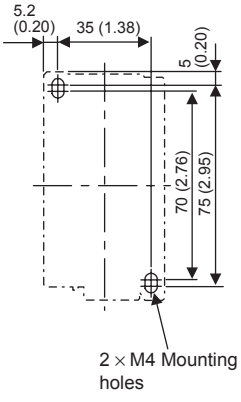	HI-15J 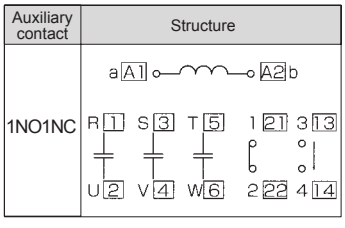 HI-20J 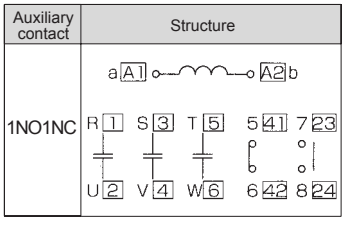

HI-15J

Auxiliary contact	Structure
1NO1NC	a A1 — A2 b; R 1 S 3 T 5 1 21 3 13; U 2 V 4 W 6 2 22 4 14

HI-20J

Auxiliary contact	Structure
1NO1NC	a A1 — A2 b; R 1 S 3 T 5 5 41 7 23; U 2 V 4 W 6 6 42 8 24

(c) Model: HI-25J and HI-35J

Dimensions in mm (in)	Mounting Hole Dimensions in mm (in)	Terminal Symbols
Approx. mass: 0.68 kg (1.50 lb) 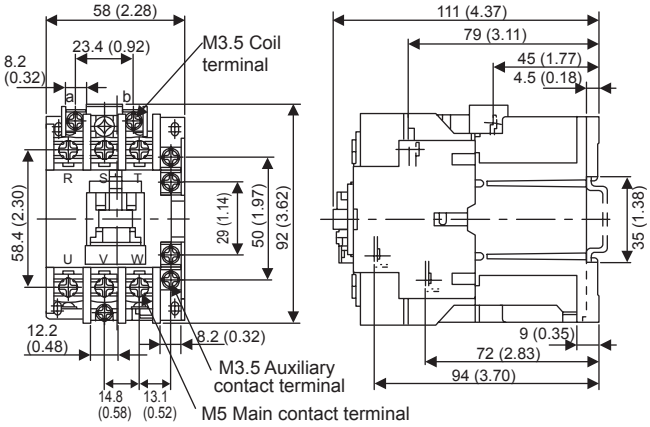	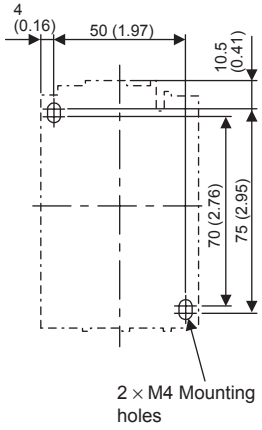	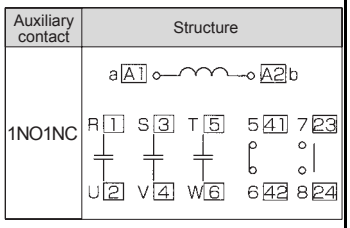

(d) Model: HI-50J and HI-65J

Dimensions in mm (in)	Mounting Hole Dimensions in mm (in)	Terminal Symbols
Approx. mass: 1.1 kg (2.43 lb) 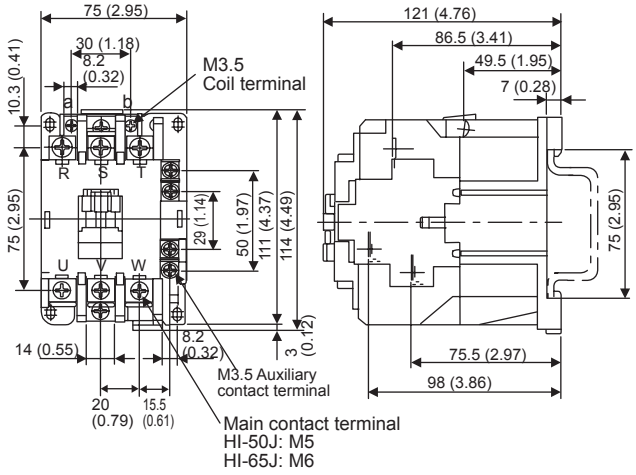	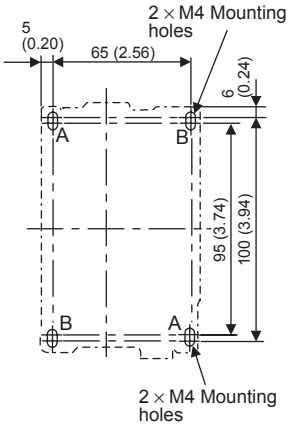	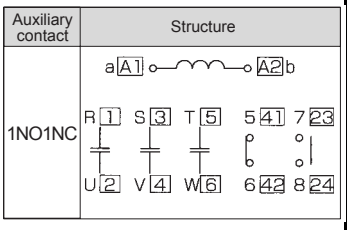

5

(3) Magnetic Contactor with Coil Drive Unit for Three-phase 400 V SERVOPACKs

The magnetic contactors for three-phase 400 V SERVOPACKs include coil drive unit.
The rated voltage of the operating coil in the coil drive unit is 24 VDC.
Maintain the power supply voltage within the specified range. The voltage below the allowable range causes malfunction, resulting in the magnetic contacts seizing or the coil burning out.
If a voltage above 24 V is applied, the unit will be damaged. Confirm the voltage at the trial operation after installation.

(a) Ratings and Specifications

Model		TCU-500U
Input (operation) Section	Rated Voltage	24 VDC
	Allowable Voltage Fluctuation	70 to 130% of the rated voltage
	Current Range	7.3 to 9.3 mA
	Operating Voltage	Maximum 70% of the rated voltage (at 23°C) (73.40 °F)
	Open Voltage	Minimum 10% of the raged voltage (at 23°C) (73.40 °F)
Output Section	Output Method	High-sensitivity relay contacts
	Max. Rated Voltage and Current	220 VAC, 2 A
	Rated Insulation Voltage	250 VAC
	Operation Time	3 ms
	Reset Time	1 ms
Operating Temperature		-20 to +55°C (–4 to 131 °F)
Surge Suppressing Performance	Max. Rated Voltage	220 VAC
	Rated Insulation Voltage	250 VAC
	Surge Voltage Control Method	CR method
	Applicable Voltage Range for Operation Magnetic Coil	Any voltage between 100 VAC and 220 VAC Examples: • 100 V 50 Hz 100 to 110 V 60 Hz • 200 V 50 Hz 200 to 220 V 60 Hz

(b) Circuit Connection Diagram

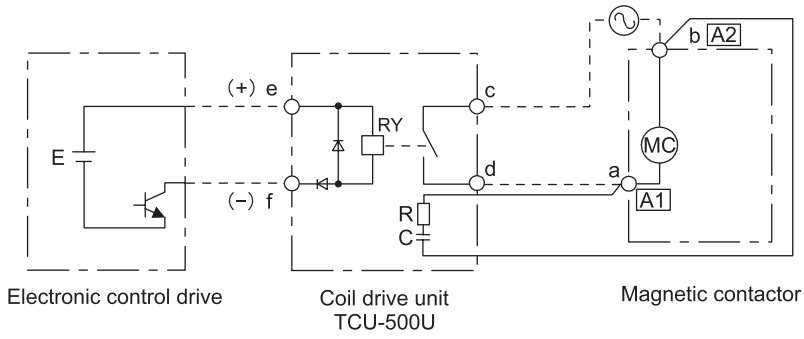

(c) Model: HI-15JCU and HI-20JCU

Dimensions in mm (in)	Mounting Hole Dimensions in mm (in)
Approx. mass: 0.45 kg (0.99 lb) 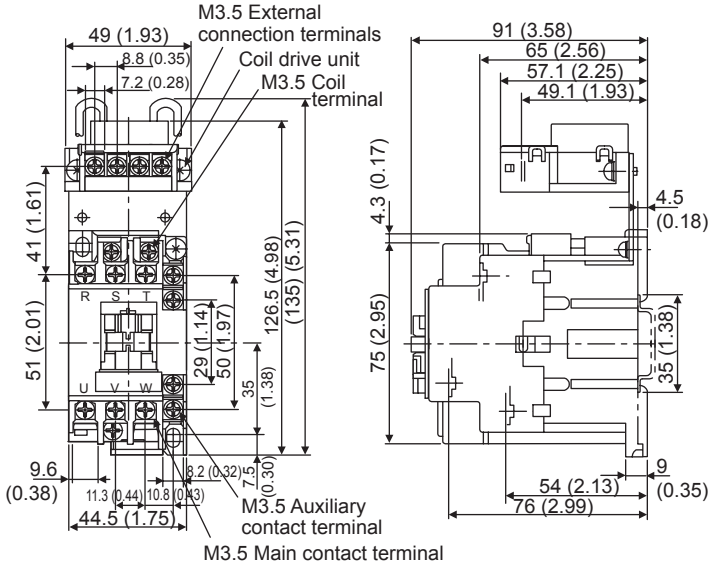	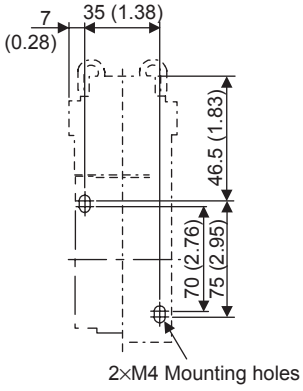

(d) Model: HI-25JCU and HI-35JCU

Dimensions in mm (in)	Mounting Hole Dimensions in mm (in)
Approx. mass: 0.75 kg (1.65 lb) 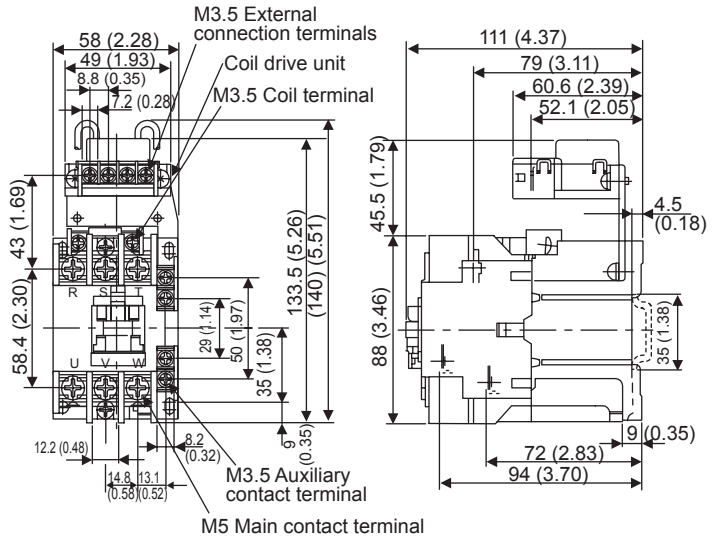	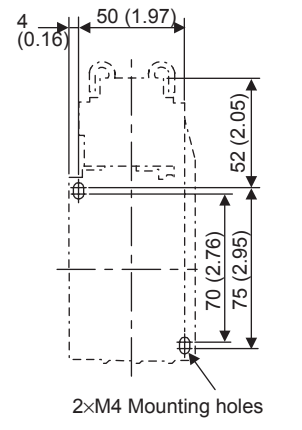

(e) Model: HI-50JCU and HI-65JCU

Dimensions in mm (in)	Mounting Hole Dimensions in mm (in)
Approx. mass: 1.17 kg (2.58 lb) 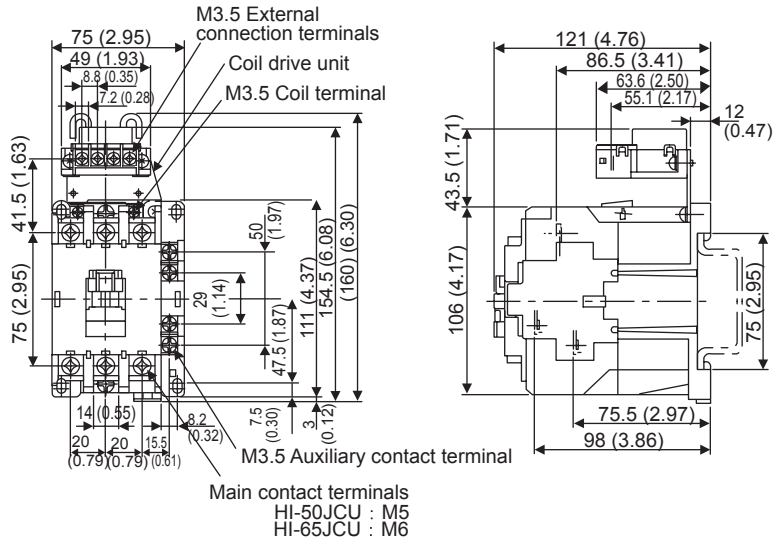	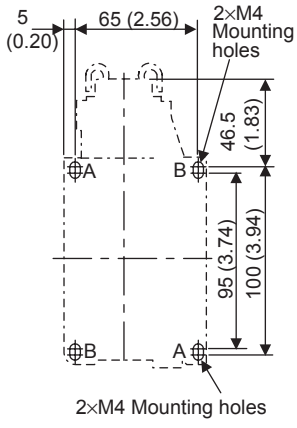

5.8.12 Surge Suppressor

(1) Surge Suppressor for Magnetic Contactor

Contact Yaskawa Controls Co., Ltd.

(a) Model: TU-25□, TU-65□

(b) Specifications

Model	Surge Absorption Method	Rated Insulation Voltage	Applicable Voltage Range for Operation Magnetic Coil AC 50/60Hz (50 V, 110 V, 127 V, 240 V, 380 V, 440 V)	Applicable Magnetic Contactor
TU-25C120	CR	150 VAC		HI-11J HI-15J HI-20J
TU-25C240	CR	300 VAC		
TU-25V440	Varistor	500 VAC		
TU-65C120	CR	150 VAC		HI-25J HI-35J HI-50J HI-65J
TU-65C240	CR	300 VAC		
TU-65V440	Varistor	500 VAC		

Note: ▬ : Applicable voltage range

(c) Dimensional Drawings

- Model TU-25□

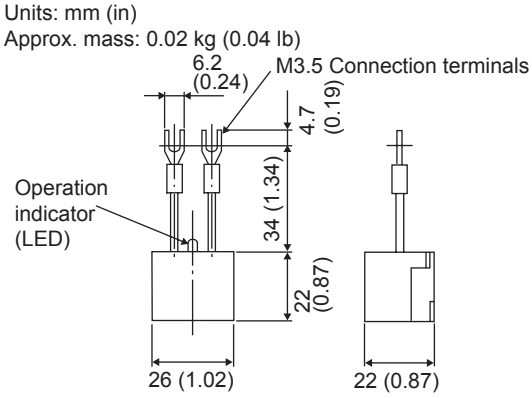

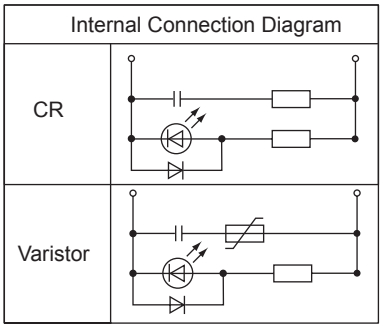

- Model TU-65□

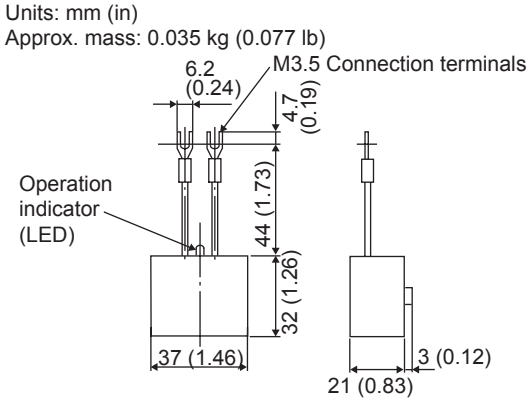

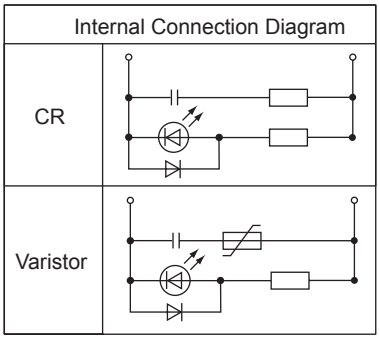

(2) Surge Suppressor for Brake Power Supply

When using a servomotor with holding brake, install a surge suppressor near the brake coil to prevent the power supply noises. The surge suppressor handled by Okaya Electric Industries Co., Ltd. is recommended.

(a) Model: CR50500BL

(b) Specifications

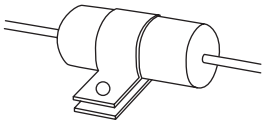

Power supply: 250 VAC
Capacitance: 0.5 μF ± 20%
Resistance: 50 Ω(1/2 W) ± 30%

5.8.13 DC Reactor for Harmonic Suppression

(1) Specifications

DC reactor for harmonic suppression is handled by Yaskawa Controls Co., Ltd.

If necessary for harmonic suppression, connect a DC reactor to the SERVOPACK. Note that no terminal for connecting a DC reactor is provided to the 6.0 kW or more SERVOPACKs.
Refer to the table below for selecting a DC reactor according to the SERVOPACK capacity. For the connection method, refer to *6.4.8 DC Reactor for Harmonic Suppression*.

Applicable SERVOPACK Model SGDH-		DC Reactor Model	DC Reactor Specifications	
			Inductance (mH)	Rated Current (A)
Single-phase 100 V	A3BE	–	–	–
	A5BE			
	01BE	X5063	10.0	1.8
	02BE	X5062	4.7	3.5
Single-phase 200 V	A3AE	–	–	–
	A5AE			
	01AE	X5071	40.0	0.85
	02AE	X5070	20.0	1.65
	04AE	X5069	10.0	3.3
Single-phase 220 V	08AE-S	X5079	4.0	5.3
	15AE-S	X5078	2.5	10.5
Three-phase 200 V	05AE	X5061	2.0	4.8
	08AE			
	10AE			
	15AE	X5060	1.5	8.8
	20AE			
	30AE	X5059	1.0	14.0
	50AE	X5068	0.47	26.8
Three-phase 400 V	05DE	X5074	4.7	1.5
	10DE	X5075	3.3	4.5
	15DE			
	20DE	X5076	2.2	8.6
	30DE			
	50DE	X5077	1.5	14.1

(2) Dimensional Drawings

Units: mm (in)

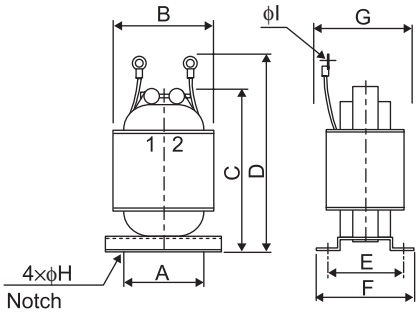

DC Reactor Model	Dimensions in mm (in)									Approx. Mass in kg (lb)
	A	B	C	D	E	F	G	ϕH	ϕI	
X5059	50 (1.97)	74 (2.91)	125 (4.92)	140 (5.51)	35 (1.38)	45 (1.77)	60 (2.36)	5 (0.20)	5.3 (0.21)	1.1 (2.43)
X5060	40 (1.57)	59 (2.32)	105 (4.13)	125 (4.92)	45 (1.77)	60 (2.36)	65 (2.56)	4 (0.16)	4.3 (0.17)	1.0 (2.20)
X5061	35 (1.38)	52 (2.05)	80 (3.15)	95 (3.74)	35 (1.38)	45 (1.77)	50 (1.97)	4 (0.16)	4.3 (0.17)	0.5 (1.10)
X5062	40 (1.57)	59 (2.32)	100 (3.94)	120 (4.72)	40 (1.57)	50 (1.97)	55 (2.17)	4 (0.16)	4.3 (0.17)	0.9 (1.98)
X5063	35 (1.38)	52 (2.05)	90 (3.54)	105 (4.13)	35 (1.38)	45 (1.77)	50 (1.97)	4 (0.16)	4.3 (0.17)	0.6 (1.32)
X5068	50 (1.97)	74 (2.91)	125 (4.92)	155 (6.1)	53 (2.09)	66 (2.6)	75 (2.95)	5 (0.20)	6.4 (0.25)	1.9 (4.19)
X5069	40 (1.57)	59 (2.32)	105 (4.13)	125 (4.92)	45 (1.77)	60 (2.36)	65 (2.56)	4 (0.16)	4.3 (0.17)	1.0 (2.20)
X5070	40 (1.57)	59 (2.32)	100 (3.94)	120 (4.72)	35 (1.38)	45 (1.77)	50 (1.97)	4 (0.16)	4.3 (0.17)	0.8 (1.76)
X5071	35 (1.38)	52 (2.05)	80 (3.15)	95 (3.74)	30 (1.18)	40 (1.57)	45 (1.77)	4 (0.16)	4.3 (0.17)	0.5 (1.10)
X5074	30 (1.18)	47 (1.85)	70 (2.76)	85 (3.35)	28 (1.10)	38 (1.50)	45 (1.77)	4 (0.16)	4.3 (0.17)	0.3 (0.66)
X5075	40 (1.57)	59 (2.32)	100 (3.94)	120 (4.72)	40 (1.57)	50 (1.97)	55 (2.17)	4 (0.16)	4.3 (0.17)	0.9 (1.98)
X5076	50 (1.97)	74 (2.91)	125 (4.92)	140 (5.51)	35 (1.38)	45 (1.77)	60 (2.36)	5 (0.20)	4.3 (0.17)	1.1 (2.43)
X5077	50 (1.97)	74 (2.91)	125 (4.92)	155 (6.1)	53 (2.09)	66 (2.6)	75 (2.95)	5 (0.20)	5.3 (0.21)	1.9 (4.19)
X5078	50 (1.97)	74 (2.91)	125 (4.92)	155 (6.1)	60 (2.36)	70 (2.76)	80 (3.15)	5 (0.20)	5.3 (0.21)	2.0 (4.41)
X5079	50 (1.97)	74 (2.91)	125 (4.92)	140 (5.51)	35 (1.38)	45 (1.77)	60 (2.36)	5 (0.20)	4.3 (0.17)	1.2 (2.65)

5.8.14 Variable Resistor for Speed and Torque Setting

(1) Model: 25HP-10B

The multiturn type winding variable resistors with dial MD10-30B4 are manufactured by Sakae Tsushin Kogyo Co., Ltd. Contact Yaskawa Controls Co., Ltd.

(2) Dimensional Drawings

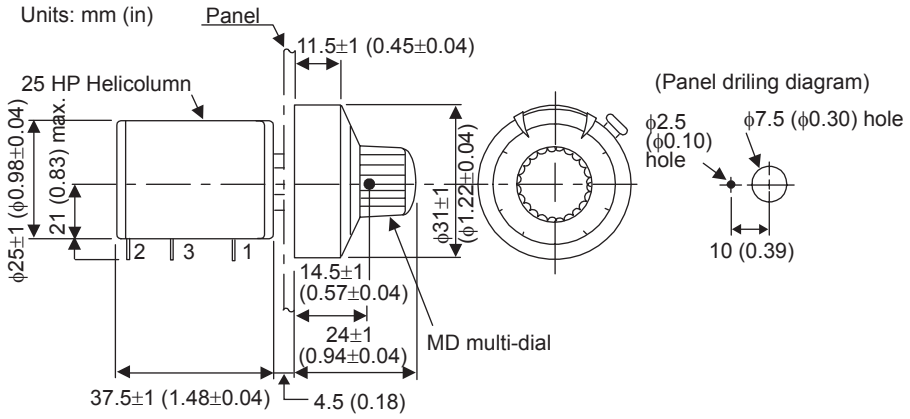

(3) Example of Connection to an External Power Supply

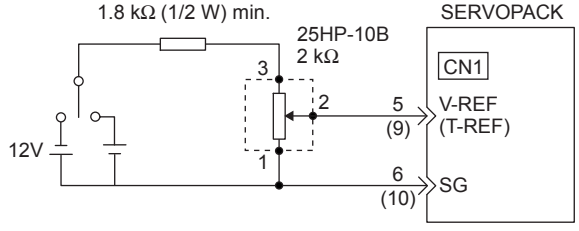

5.8.15 Encoder Signal Converter Unit

The encoder signal converter unit (the trade name “Receiver Unit”) converts encoder signal output from the line driver to open-collector or voltage-pulse output.

A socket model 11PFA is required to use a Receiver Unit.

(1) Model: LRX-01 / A□

Contact Yaskawa Controls Co., Ltd.

(2) Specifications

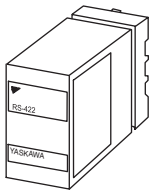

Specifications	Receiver Unit			
	LRX-01/A1	LRX-01/A2	LRX-01/A3	LRX-01/A4
Power Supply	12 VDC ±10 %, 100 mA		5 VDC ±5 %, 100 mA	
Input Signals	Balanced line driver input (RS-422) Input Circuit 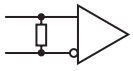			
Output Signals	Voltage pulse output Output Circuit	Open collector output Output Circuit 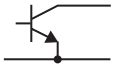	Voltage pulse output Output Circuit	Open collector output Output Circuit 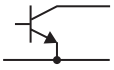
Input Signal Level	Differential voltage ≥ 0.3 V, built-in terminator 100 Ω			
Output Signal Level	H: 10 V min. (1 mA) L: 0.5 V max. (30 mA)	L: 0.5 V min. (30 mA) Withstand voltage: 50 V	H: 3 V min. (1 mA) L: 0.5 V max. (30 mA)	L: 0.5 V min. (30 mA) Withstand voltage: 50 V
Ambient Temperature	0 (32 °F) to + 60 °C (140 °F)			
IC Used	Receiver IC: AM26LS32C or the equivalent			
Response Frequency	100 kHz			

(3) Dimensional Drawings

The socket is optional.

Units: mm (in)

Receiver unit and socket

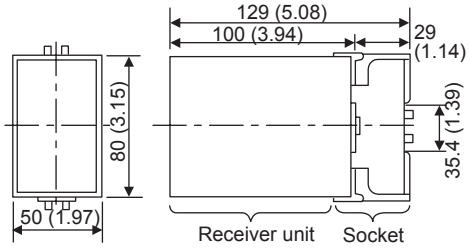

Socket Type 11PFA

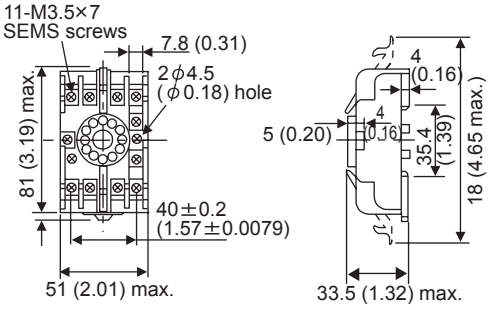

5.8.16 MECHATROLINK-I I/F Unit

(1) Model: JUSP-NS100

(2) Specifications

Item		Details
Applicable SERVOPACK		All SGDH-□□□E models
Installation Method		Mounted on the SGDH SERVOPACK side: CN10.
Basic Specifications	Power Supply Method	Supplied from the SERVOPACK control power supply.
	Power Consumption	2 W
MECHATROLINK Communications	Baud Rate/ Transmission Cycle	4 Mbps / 2 ms
Command Format	Operation Specification	Positioning using MECHATROLINK-I communications.
	Reference Input	MECHATROLINK-I communications Commands: Motion commands (position, speed), Interpolation commands, Parameter read/write, Monitor output
Position Control Functions	Acceleration/ Deceleration Method	Linear first/second-step, asymmetric, exponential, S-curve
	Fully Closed Control	Possible
Fully Closed System Specifications	Fully Closed Encoder Pulse Output Form	5 V differential line-driver output (complies with EIA Standard RS-422A)
	Fully Closed Encoder Pulse Signal Form	90° Phase difference 2-phase differential pulse (phase A, phase B)
	Maximum Receivable Frequency for SERVOPACK	1 Mpps
	Power Supply for Fully Closed Encoder	To be prepared by customer.
Input Signals	Signal Allocation Changes Possible	Forward/reverse run prohibited, Zero point return deceleration LS External latch signals 1, 2, 3 Forward/reverse torque control
Internal Functions	Position Data Latch Function	Position data latching is possible using phase C, and external signals 1, 2, 3
	Protection	Parameters damage, Parameter setting errors, Communications errors, WDT errors, Fully closed encoder detecting disconnection
	LED Indicators	A: Alarm R: MECHATROLINK Communicating

(3) Dimensional Drawings

Units: mm (in) Approx. mass: 0.2 kg (0.44 lb)

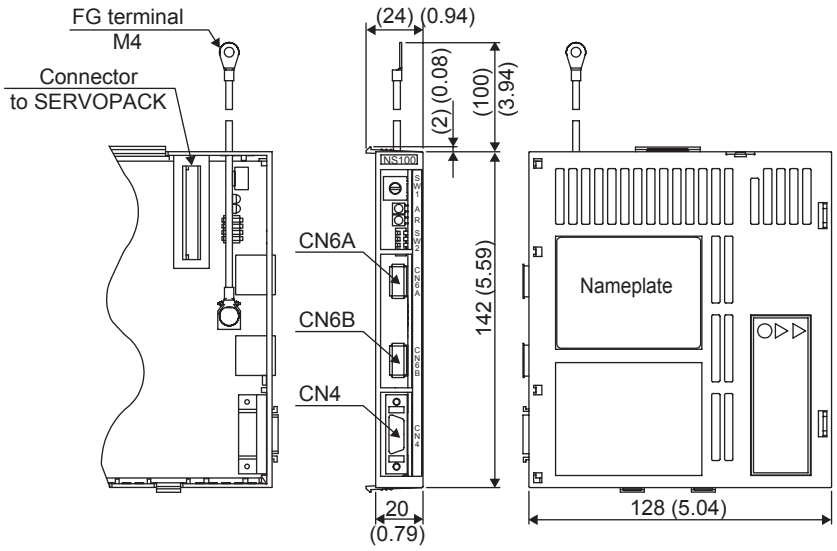

5.8.17 DeviceNet I/F Unit

(1) Model: JUSP-NS300

(2) Specifications

Item		Details
Applicable SERVOPACK		All SGDH-□□□E models
Installation Method		Mounted on the SGDH SERVOPACK side: CN10.
Basic Specifications	Power Supply Method	Supplied from the SERVOPACK control power supply.
	Power Consumption	1.3 W
DeviceNet Communications	Baud Rate Setting	Select from 125 kbps, 250 kbps, or 500 kbps using a rotary switch.
	Node Address Setting	Select the address from 0 to 63 using the rotary switches.
Command Format	Operation Specifications	Positioning using DeviceNet communications.
	Reference Input	DeviceNet communications Commands: Motion commands (position, speed), and Parameter read/write
Position Control Functions	Acceleration/ Deceleration Method	Linear first/second-step, asymmetric, exponential, S-curve
	Fully Closed Control	Possible
Input Signals	Fixed Allocation to SER-VOPACK CN1 Connector	Forward/reverse run prohibited, Zero point signal, Emergency stop signal
Internal Functions	Position Data Latch Function	Position data latching is possible using phase C, zero point signals, and external signals.
	Protection	Parameters damage, Parameter setting errors, Communications error, etc.
	LED Indicators	MS: Module Status NS: Network Status

(3) Dimensional Drawings

Units: mm (in) Approx. mass: 0.2 kg (0.44 lb)

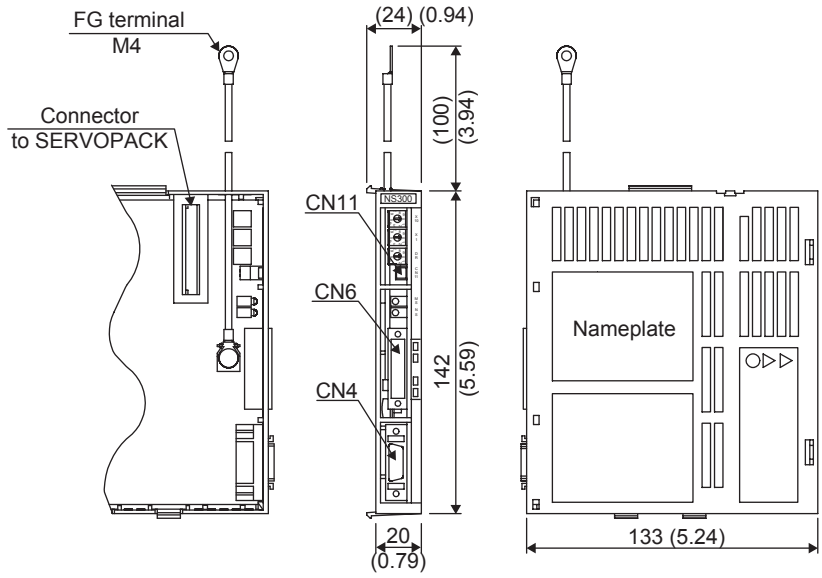

5.8.18 PROFIBUS-DP I/F Unit

(1) Model: JUSP-NS500

(2) Specifications

Item		Details
Applicable SERVOPACk		All SGDH-□□□E models
Installation Method		Mounted on the SGDH SERVOPACK side: CN10.
Basic Specifications	Power Supply Method	Supplied from the SERVOPACK control power supply.
	Power Consumption	1.3 W
PROFIBUS-DP Communications	Baud Rate Setting	The baud rate is automatically set by the Master between 9.6 kbps and 12 Mbps.
	Station Address Setting	Select the address from 0 to 7D (0 to 125) using the rotary switches.
Command Format	Operation Specifications	Positioning using PROFIBUS-DP communications
	Reference Input	PROFIBUS-DP communications Commands: Motion commands (position, speed), Parameter read/write
Position Control Functions	Acceleration/ Deceleration Method	Linear first/second-step, asymmetric, exponential, S-curve
	Fully Closed Control	Possible
Input Signals	Fixed Allocation to SERVOPACK CN1 Connector	Forward/reverse run prohibited, Zero point return deceleration LS, Zero point signal, External positioning signal
	NS500 Unit	Emergency stop signal
Output Signals	SERVOPACK CN1 Connector*	Servo alarm, Brake interlock, Servo ready, Positioning completion
	NS500 Unit	Notch 1, notch 2

Item		Details
Internal Functions	Position Data Latch Function	Position data latching is possible using phase C, zero point signals, and external signals.
	Protection	Parameters damage, Parameter setting errors, Communications errors, etc.
	LED Indicators	ERR: Module Error COMM: Communications Status

* The allocation of the output signals for brake interlock, servo ready, or positioning completion can be changed using parameter settings.

(3) Dimensional Drawings

Units: mm (in) Approx. mass: 0.2 kg (0.44 lb)

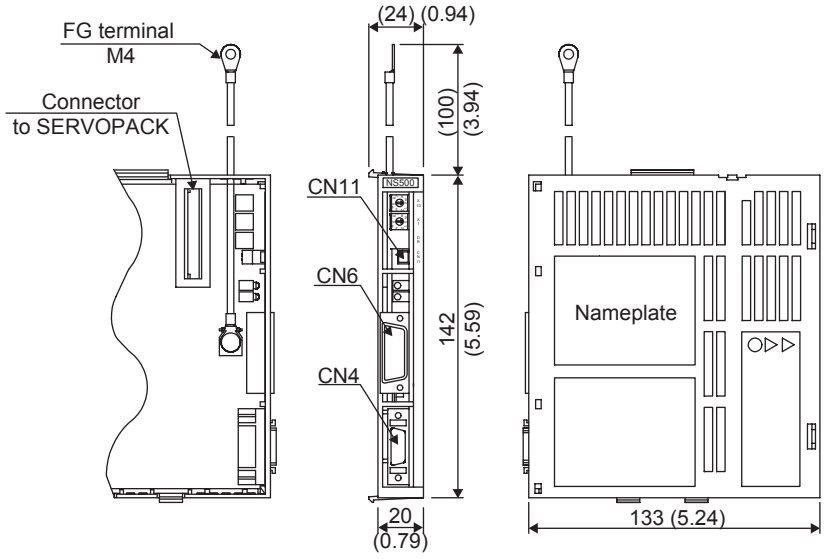

5.8.19 INDEXER Module

(1) Model: JUSP-NS600

(2) Specifications

Item			Details
Applicable SERVOPACK			All SGDH-□□□E SERVOPACKs
Installation Method			Mounted on the SGDH SERVOPACK side: CN10.
Basic Specifications	Power Supply Method		Supplied from the SERVOPACK control power supply
	Power Consumption		2.6 W
Control Specifications	Program Table		Program table positioning by designating the starting step by the contact input (Maximum 128 steps)
	Serial Communications		Serial commands in ASCII codes Communications specifications: RS422 / RS485 (Maximum 50 m (164.0 ft)) RS232C (Maximum 3 m (9.84 ft)) Connection: Multi-drop method (Maximum 16 axes) Baud rate: 9600, 19200, 38400bps
	Command Table		Positioning by designating the command table by the contact input (Maximum 128 points)
	Zero-Point Return		3 types
Other Functions			External positioning, JOG speed table operation (Maximum 16 speeds)
I/O Signals	Input	SERVOPACK	• S-ON (Servo ON) • P-OT (Forward Run Prohibited), N-OT (Reverse Run Prohibited) • DEC (Zero-Point Return Deceleration LS) • RTRG (External Positioning Signal)
		INDEXER Module	• MODE0/1 (Mode signal) • START/HOME (Start Signal / Zero-point Return Execution) • PGMRES/JOGP (Program Reset / Motor Forward Rotation) • SEL0/JOGN (Program Starting Step Designation / Motor Reverse Rotation) • SEL1 to SEL4 / JOG0 to JOG3 Program Starting Step Designation / JOG Speed Table Selection)
	Output	SERVOPACK	• ALM (Servo Alarm) • WARN (Warning) • BK (Brake Interlock) • S-RDY (Servo Ready) • ALO1, ALO2, ALO3 (Alarm Codes)
		INDEXER Module	• INPOSITION (Positioning Completed) • POUT0 to POUT4 (Programmable Outputs)

(3) Dimensional Drawings

Units: mm (in) Approx. mass: 0.2 kg (0.44 lb)

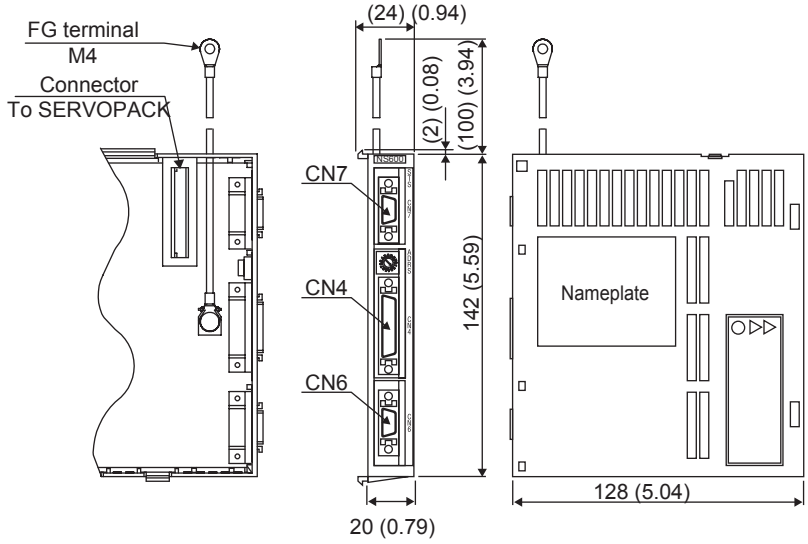

5.8.20 Setup Support Tool SigmaIndexer

(1) Model: JZSP-SGNS600J

(2) Specifications

Item	Function		Remarks
Parameters	• Parameter edition • Parameter online edition		Same as SigmaWin 100
Alarm	Alarm display		
Monitoring	Product information display		
	Monitoring	• Status monitor • Motion monitor • Input signal monitor • Output signal monitor	
Setup	Absolute encoder setting	Absolute encoder reset	
	Online autotuning setting	• Machine rigidity setting • Moment of inertia ratio setting	
	Offset adjustment	• Analog monitor output adjustment • Motor current detection signal offset adjustment	
	Zero-point search		
	Password setting		
Trace and Tuning	Trace		
Test Run	JOG operation		
Table Edition	• Program table operation • ZONE table edition • JOG speed table edition		Exclusive functions

5.8.21 Fully-closed I/F Unit

(1) Model: JUSP-FC100

(2) Specifications

Item		Details
Applicable SERVOPACK		All SGDH-□□□E models
Installation Method		Mounted on the SGDH SERVOPACK side: CN10.
Basic Specifications	Power Supply Method	Supplied from the SERVOPACK control power supply.
	Power Consumption	0.5 W or less
Fully Closed System Specifications	Fully Closed Encoder Pulse Output Form	5 V differential line-driver output (complies with EIA Standard RS-422A)
	Fully Closed Encoder Pulse Signal Form	90° Phase difference 2-phase differential pulse (phase A, phase B)
	Maximum Receivable Frequency for SERVOPACK	1 Mbps
	Power Supply for Fully Closed Encoder	To be prepared by customer.
Internal Functions	Protection	Detecting fully closed encoder disconnection
	LED Indicators	Setting with the parameters

(3) Dimensional Drawings

Units: mm (in) Approx. mass: 0.2 kg (0.44 lb)

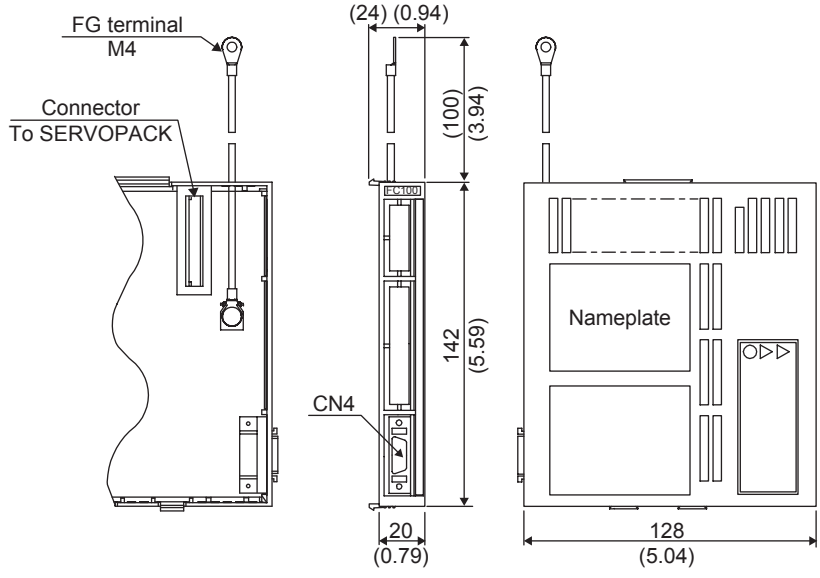

6

Wiring

6.1 Wiring Main Circuit -6-2
6.1.1 Names and Functions of Main Circuit Terminals - - - - - - - - - - - - - - - - 6-2
6.1.2 Wiring Main Circuit Power Supply Connector (Spring Type) - - - - - - - - 6-4
6.1.3 Typical Main Circuit Wiring Examples - 6-5

6.2 Wiring Encoders -6-8
6.2.1 Connecting an Encoder (CN2) and Output Signals from the SERVOPACK (CN1) - 6-8
6.2.2 Encoder Connector (CN2) Terminal Layout - - - - - - - - - - - - - - - - - - - 6-9

6.3 Examples of I/O Signal Connections - - - - - - - - - - - - - - - - -6-10
6.3.1 Speed Control Mode - 6-10
6.3.2 Position Control Mode - 6-11
6.3.3 Torque Control Mode - 6-12
6.3.4 I/O Signal Connector (CN1) Terminal Layout - - - - - - - - - - - - - - - - - 6-13
6.3.5 I/O Signal (CN1) Names and Functions - 6-14
6.3.6 Interface Circuit - 6-16

6.4 Others -6-19
6.4.1 Wiring Precautions - 6-19
6.4.2 Wiring for Noise Control - 6-20
6.4.3 Installation Conditions of EMC Directives - - - - - - - - - - - - - - - - - - - 6-23
6.4.4 Installation Conditions of UL Standards - 6-26
6.4.5 Using More Than One SERVOPACK - 6-27
6.4.6 Extending Encoder Cables - 6-28
6.4.7 Operating Conditions on 400-V Power Supply Voltage - - - - - - - - - - 6-30
6.4.8 DC Reactor for Harmonic Suppression - 6-31

6.5 Connecting Regenerative Resistors - - - - - - - - - - - - - - - - - -6-33
6.5.1 Regenerative Power and Regenerative Resistance - - - - - - - - - - - - - 6-33
6.5.2 Connecting External Regenerative Resistors - - - - - - - - - - - - - - - - - 6-33

6

6.1 Wiring Main Circuit

This section describes typical examples of main circuit wiring, functions of main circuit terminals, and the power ON sequence.

⚠ CAUTION

- Do not bundle or run power and signal lines together in the same duct. Keep power and signal lines separated by at least 300 mm (11.81 in).
  Failure to observe this caution may result in malfunction.
- Use twisted-pair shielded wires or multi-core twisted pair shielded wires for signal and encoder (PG) feedback lines.
  The maximum length is 3 m (118.11 in) for reference input lines and is 20 m (787.40 in) for PG feedback lines.
- Do not touch the power terminals for five minutes after turning power OFF because high voltage may still remain in the SERVOPACK.
  Make sure the charge indicator is turned OFF first before starting an inspection.
- Avoid frequently turning power ON and OFF. Do not turn the power ON or OFF more than once per minute.
  Since the SERVOPACK has a capacitor in the power supply, a high charging current flows for 0.2 seconds when the power is turned ON. Frequently turning the power ON and OFF causes main power devices such as capacitors and fuses to deteriorate, resulting in unexpected problems.

6.1.1 Names and Functions of Main Circuit Terminals

Terminal Symbol	Name	Main Circuit Voltage (V)	Maximum Applicable Servomotor Capacity (kW)	Functions
L1, L2	Main circuit power supply input terminal	100	0.03 to 0.2	Single-phase 100 to 115 VAC$^{+10\%, -15\%}$ (50/60 Hz)*2
		200	0.03 to 0.4	Single-phase 200 to 230 VAC$^{+10\%,-15\%}$ (50/60 Hz) *2
L1, L2, L3*1		200	0.5 to 7.5	Three-phase 200 to 230 VAC$^{+10\%, -15\%}$ (50/60 H) *2
		400	0.5 to 3.0	Three-phase 380 to 480VAC$^{+10\%, -15\%}$ (50/60 Hz) *2
U, V, W	Servomotor connection terminals	–	–	Connects to the servomotor.
L1C, L2C	Control circuit power supply input terminal	100	0.03 to 0.2	Single-phase 100 to115 VAC$^{+10\%, -15\%}$ (50/60 Hz) *2
		200	0.03 to 7.5	Single-phase 200 to 230 VAC$^{+10\%, -15\%}$ (50/60 Hz) *2
24V, 0V		400	0.5 to 3.0	24 VDC (±15%)
⏚	Ground terminals	–	–	Connects to the power supply ground terminals and servomotor ground terminal.

Terminal Symbol	Name	Main Circuit Voltage (V)	Maximum Applicable Servomotor Capacity (kW)	Functions
B1, B2	External regenerative resistor connection terminal	100	0.03 to 0.2	Normally not connected. Connect an external regenerative resistor (provided by customer) between B1 and B2 if the regenerative capacity is insufficient.
		200	0.03 to 0.4	
B1, B2, B3		200	0.5 to 5.0	Normally short B2 and B3 (for an internal regenerative resistor). Remove the wire between B2 and B3 and connect an external regenerative resistor (provided by customer) between B1 and B2 if the capacity of the internal regenerative resistor is insufficient.
		400	0.5 to 5.0	
B1, B2		200	6.0 to 15.0	Connect an external regenerative resistor (provided by customer) between B1 and B2. Refer to *6.5 Connecting Regenerative Resistors* for details.
		400	6.0 to 15.0	
⊕1, ⊕2	DC reactor for harmonic suppression terminal	100	0.03 to 0.2	Normally short ⊕1 and ⊕2 . If a countermeasure against power supply harmonic waves is needed, connect a DC reactor between ⊕1 and ⊕2.
		200	0.03 to 5.0	
		400	0.5 to 15.0	
		200	6.0 or more	These terminals do not exist.
⊕	Main circuit plus terminal	200	6.0 or more	Normally not connected. Note: This terminal is on the SERVOPACK with a capacity of 6.0 kW or higher only.
⊖	Main circuit minus terminal	–	–	Normally not connected.

* 1. SGDH-08AE-S SERVOPACK (for SGMAH-08A, SGMPH-08A Servomotor) and SGDH-15AE-S SERVOPACK (for SGMPH-15A Servomotor) have single-phase, 220 V power supply specifications. Connect the following power supply between L1 and L3.

Single-phase 220 to 230 VAC $^{+10\%,\ -15\%}$ (50/60 Hz)

If a power supply of 187 V (-15% of 220 V) or less is used, alarm 41, which indicates a voltage shortage, may occur when accelerating to the maximum speed with the maximum torque of the servomotor.

* 2. If using the main circuit power supply and the control power supply with DC power supply input, refer to *6.1.3 Typical Main Circuit Wiring Examples (5) DC Power Supply Input* for more information on wiring.

6.1.2 Wiring Main Circuit Power Supply Connector (Spring Type)

⚠ CAUTION

- Observe the following precautions when wiring main circuit connector.
  - Remove the connector from the SERVOPACK prior to wiring.
  - Insert only one wire per terminal on the connector.
  - Make sure that the core wire is not electrically shorted to adjacent core wires.

SERVOPACKs with a capacity below 1.5 kW have a removable connector for the main circuit power supply or the control power supply terminal. Use the following procedure when connecting the SERVOPACK to the connector.

(1) Wire Size

Wire can be used simply by stripping back the outer coating. The following is applicable wire sizes.

- Single wire: ϕ0.5 (ϕ0.02 in) to ϕ1.6 (ϕ0.06 in) mm
- Braided wire: AWG28 to AWG12

(2) Connection Procedure

1. Strip the end of the wire.

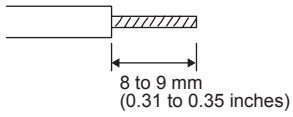

2. Open the wire terminal on the power supply connector housing (plug) with the tool using the procedure shown in Fig. A or B.
   - Insert the connection hook end of the provided tool into the slot as shown in Fig. A.
   - Use a standard flat-blade screwdriver (blade width of 3.0 to 3.5 mm (0.12 to 0.14 in)) or type 54932-0000 manufactured by Molex Japan Co., Ltd. Put the blade into the slot, as shown in Fig. B, and press down firmly to open the wire terminal.

   Either the procedure shown in Fig. A or B can be used to open the wire insert opening.

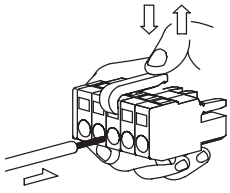

Fig. A

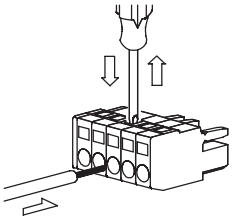

Fig. B

3. Insert the wire core into the opening and then close the opening by releasing the lever connection or removing the screwdriver.

INFO

The terminal block for SERVOPACK SGDH-□DE for 400 V 500 W to 1.5 kW, has an indication “300 V, 15 A”. This is a rating recognition of UL authorization, which means that the terminal blocks are authorized for “limited rating for industrial use” and applicable up to 600 V. Accordingly, these terminal blocks are applicable for 400 V SERVOPACK.

6.1.3 Typical Main Circuit Wiring Examples

(1) Single-phase, 100/200 V

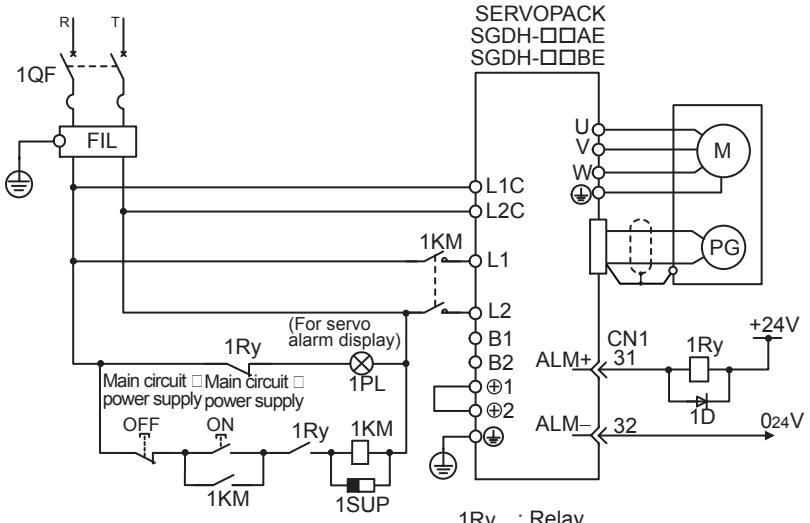

1QF : Molded-case circuit breaker
FIL : Noise filter
1KM : Magnetic contactor

1Ry : Relay
1PL : Indicator lamp
1SUP : Surge suppressor
1D : Flywheel diode

(2) Three-phase, 200 V

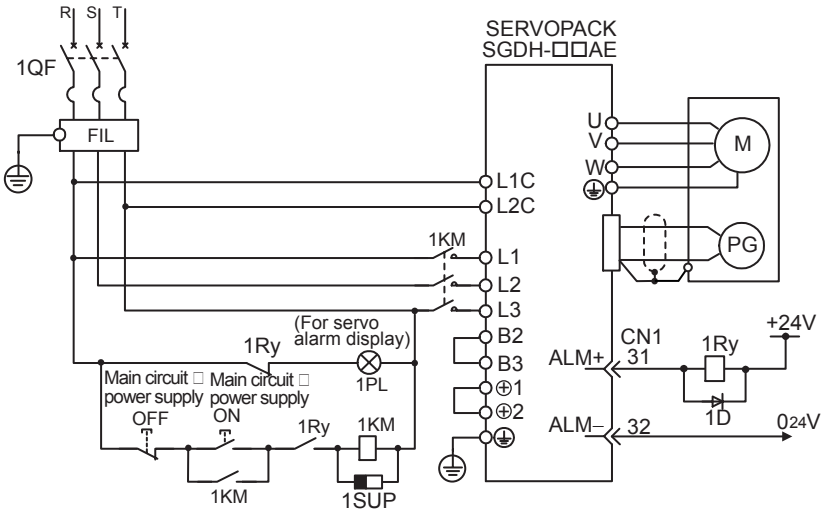

1QF : Molded-case circuit breaker
FIL : Noise filter
1KM : Magnetic contactor

1Ry : Relay
1PL : Indicator lamp
1SUP : Surge suppressor
1D : Flywheel diode

6

(3) Single-phase 220V, 800 W, 1.5 kW

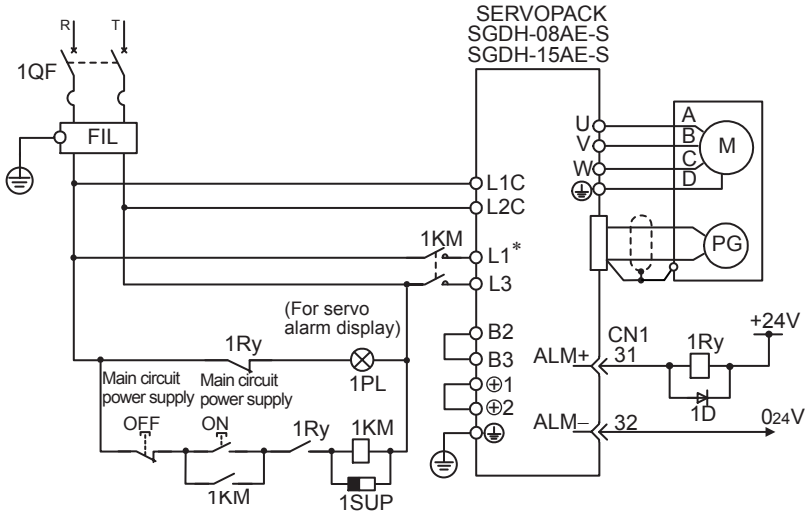

1QF : Molded-case circuit breaker
FIL : Noise filter
1KM : Magnetic contactor
1Ry : Relay
1PL : Indicator lamp
1SUP : Surge suppressor
1D : Flywheel diode

* Terminal L2 is not used when using the SERVOPACK for single-phase 220V, 800W, and 1.5 kW.

(4) Three-phase 400 V

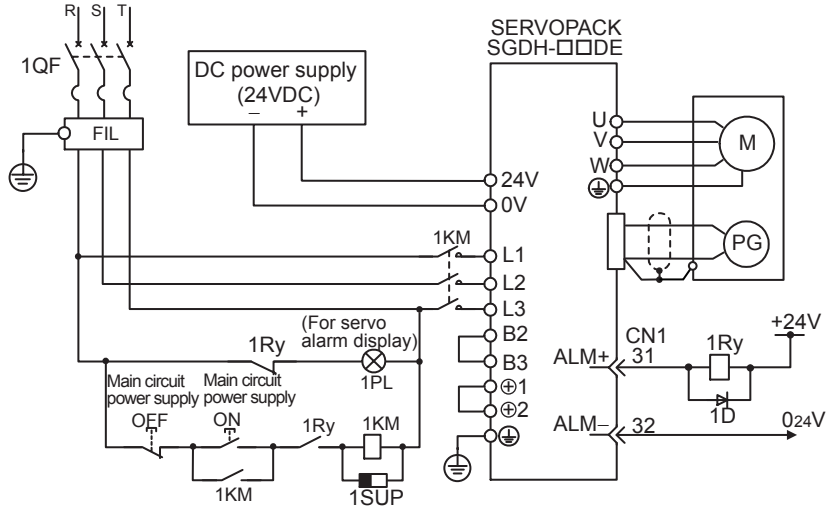

1QF : Molded-case circuit breaker
FIL : Noise filter
1KM : Magnetic contactor
1Ry : Relay
1PL : Indicator lamp
1SUP : Surge suppressor
1D : Flywheel diode

IMPORTANT

■Designing a Power ON Sequence

Note the following points when designing the power ON sequence.

- Design the power ON sequence so that main circuit power supply is turned OFF when a servo alarm signal is output. See the previous circuit figure.
- Hold the power ON button for at least two seconds. The SERVOPACK will output (1Ry is OFF) a servo alarm signal for two seconds or less when power is turned ON. This is required in order to initialize the SERVOPACK.

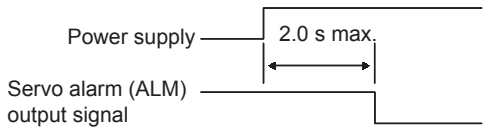

- Select the power supply specifications for the parts in accordance with the input power supply.

■Harmonic Suppression

If another device requires for harmonic suppression, connect the DC reactor to the DC main circuit side on the SERVOPACK. For connecting examples, refer to *6.4.8 DC Reactor for Harmonic Suppression*.

(5) DC Power Supply Input

⚠ WARNING

- SGDH SERVOPACK is applicable for both AC and DC power supply input.
  However, if the DC power supply input supplies a voltage without setting '1' (for DC power supply input) in the parameter Pn001.2, the SERVOPACK's internal elements will burn and may cause fire or malfunction.
  When using the SERVOPACK with DC power supply input, confirm the following setting of parameters.

When using the SGDH SERVOPACK with DC power supply input, use the following power supply and set the parameter Pn001.2 for '1'. Also, read carefully to the following 'Important' section.

IMPORTANT

1. Servomotor returns the regenerative energy to the power supply when regenerating. SERVOPACK does not regenerate with DC power supply input specifications, so regenerate the energy on the power supply side.
2. Take appropriate measures to ensure that a high charging current stays inside the SERVOPACK when power is OFF.

(a) Main Circuit and Control Power Supply Input

The following shows the connection for the main power supply and the control power supply.

Terminal Symbol	Name	Functions
⊕1 or ⊕	Main circuit plus terminal	270 V to 320 VDC
		130 to 155 VDC for SGDH-□□BE SERVOPACK with 100 V input
⊖	Main circuit minus terminal	0 V
L1C, L2C	Control power supply input terminal	270 to 320 VDC, without polarity
		130 to 155 VDC for SGDH-□□BE SERVOPACK with 100 V input

(b) Setting Parameters

Parameter		Meaning
Pn001	n.□0□□	Not applicable for DC power supply input: Input the AC power supply for the terminal L1, L2 or L3.
	n.□1□□	Applicable for DC power supply input: Input the DC power supply between the terminal ⊖ and the terminal ⊕1, or the terminal ⊖ and the terminal ⊕.
• When changing the parameters, turn the power ON again for the necessity of the effective setting.		

6.2 Wiring Encoders

The connection cables between encoder and SERVOPACK and wiring pin numbers differ depending on servomotor model. Refer to *5 Specifications and Dimensional Drawings of Cables and Peripheral Devices* for details.

6.2.1 Connecting an Encoder (CN2) and Output Signals from the SERVOPACK (CN1)

(1) Incremental Encoders

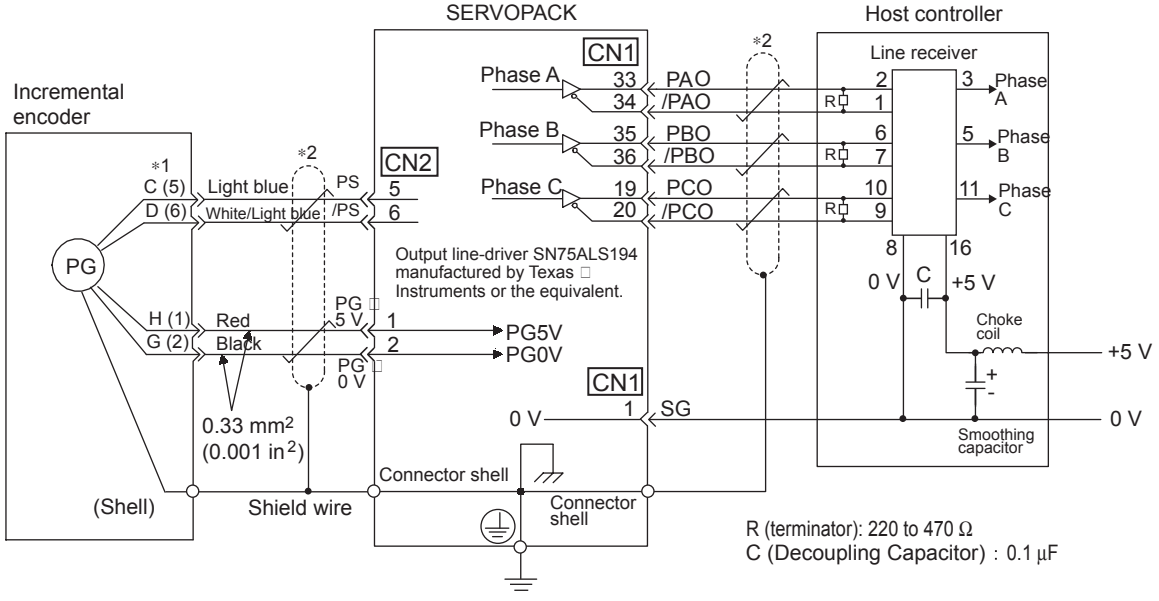

*1 The pin numbers for the connector wiring differ depending on the servomotors.
C, D, H, G : pin number for the SGMGH, SGMSH, SGMDH, SGMUH servomotors.
1, 2, 5, 6 : pin number for the SGMAH and SGMPH servomotors.

*2 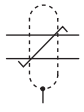 : represents twisted-pair wires.

(2) Absolute Encoders

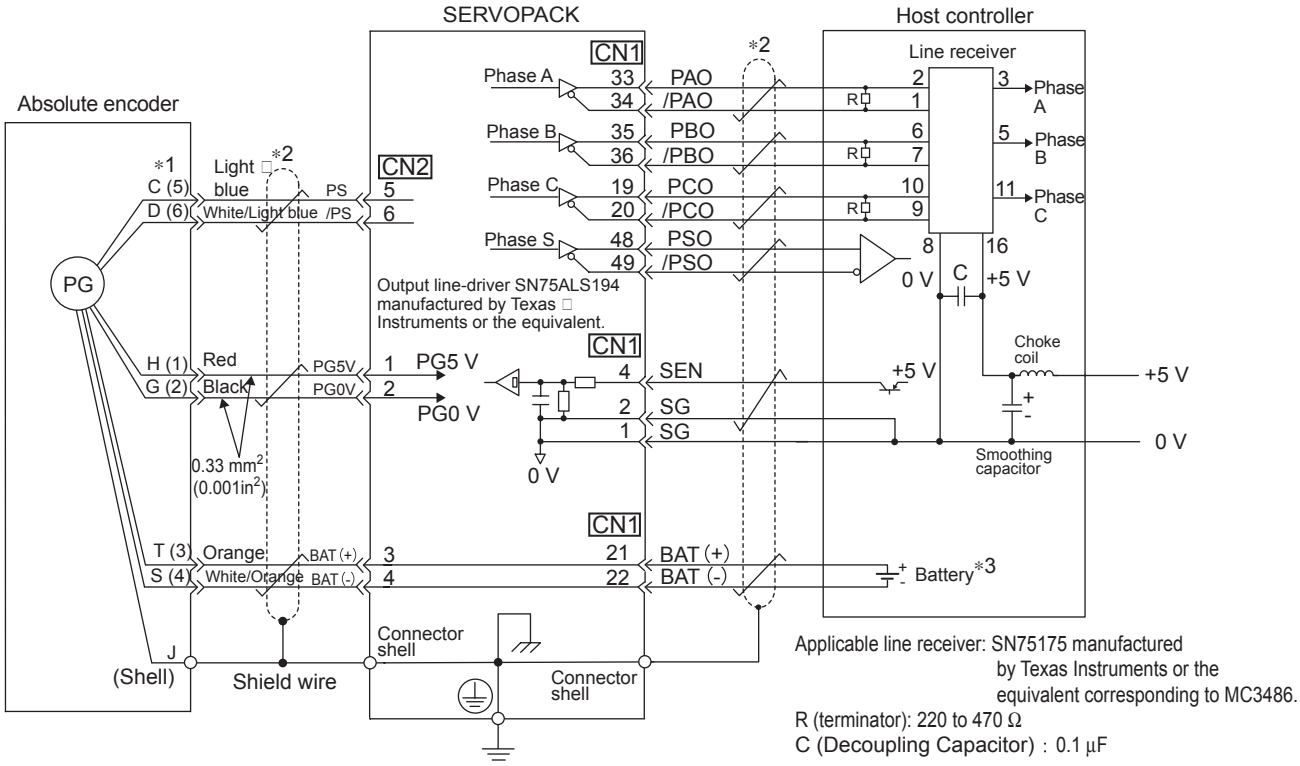

*1 The pin numbers for the connector wiring differ depending on the servomotors.
C,D,H,G,S,T : pin number for the SGMGH, SGMSH, SGMDH, SGMUH servomotors.
1, 2, 3, 4, 5, 6 : pin number for the SGMAH and SGMPH servomotors

*2 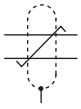 : represents twisted-pair wires.

*3 When using an absolute encoder, install a battery on the host controller side to supply power.

6.2.2 Encoder Connector (CN2) Terminal Layout

1	PG5V	PG power supply +5 V	2	PG 0 V	PG power supply 0 V
3	BAT (+)	Battery (+) (For an absolute encoder)	4	BAT (-)	Battery (-) (For an absolute encoder)
5	PS	PG serial signal input	6	/PS	PG serial signal input
SHELL	Shield	–	–	–	–

6.3 Examples of I/O Signal Connections

6.3.1 Speed Control Mode

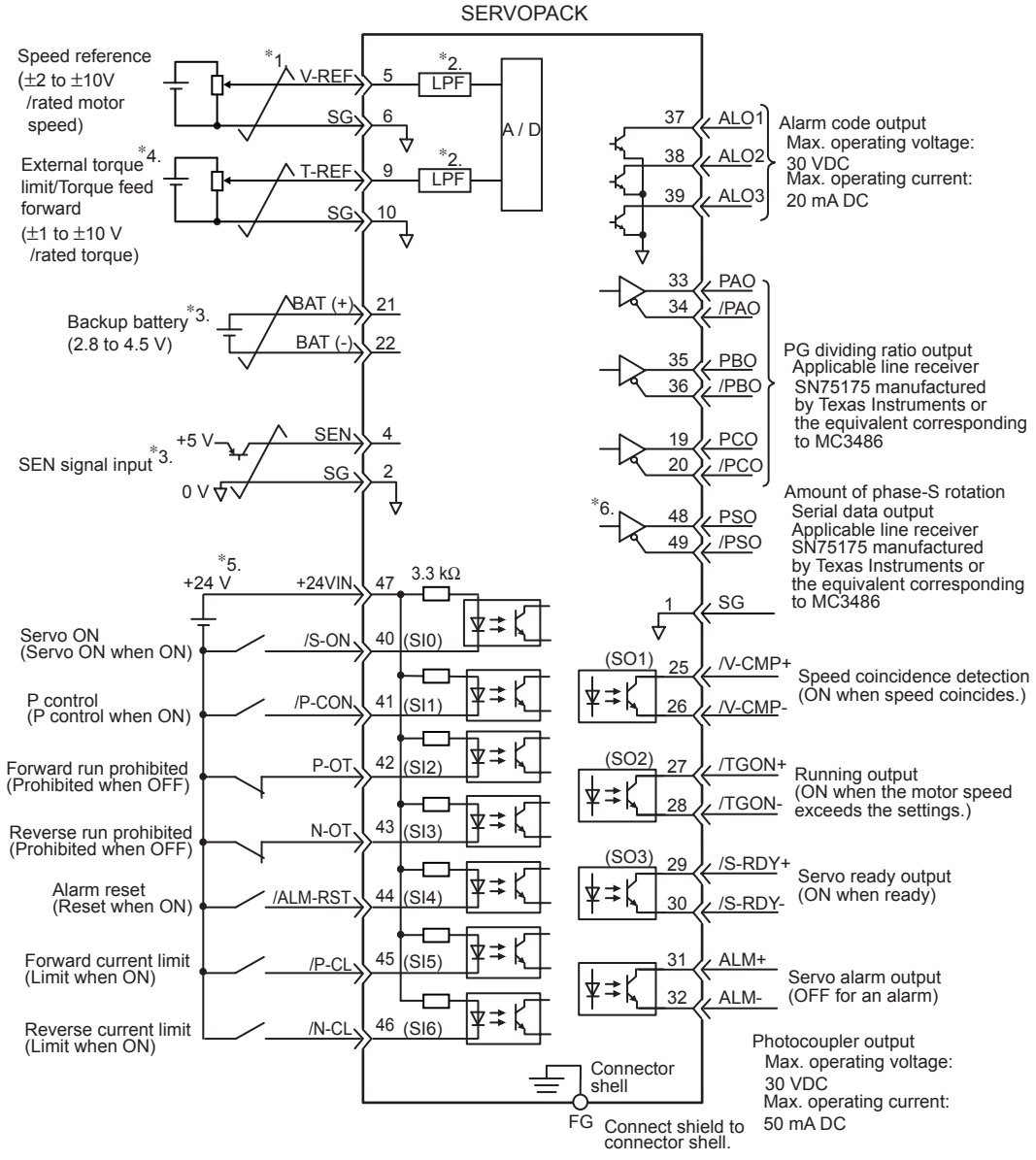

* 1. represents twisted-pair wires.
* 2. The time constant for the primary filter is 47 μs.
* 3. Connect a backup battery when using an absolute encoder. When connecting a battery to the host controller, however, do not connect a backup battery.
* 4. Enabled by the parameter setting.
* 5. Customers must purchase a 24 VDC power supply with double-shielded enclosure.
* 6. Enabled when using the absolute encoder.

Note: The functions allocated to the input signals SI0 to SI6 and the output signals SO1 to SO3 can be changed by using the parameters. Refer to *7.3.2 Input Circuit Signal Allocation* and *7.3.3 Output Circuit Signal Allocation*.

6.3.2 Position Control Mode

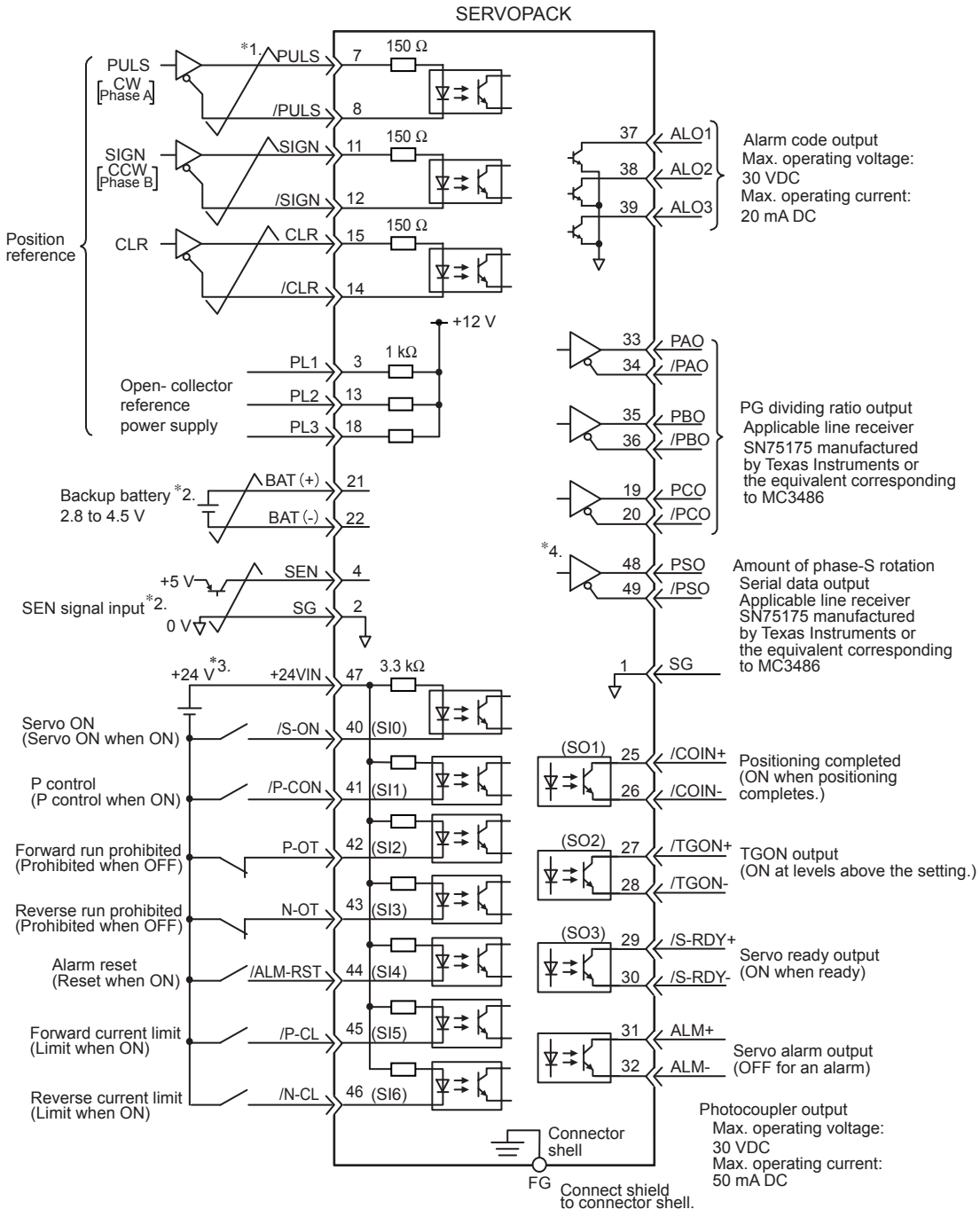

* 1. : represents twisted-pair wires.

* 2. Connect a backup battery when using an absolute encoder. When connecting a battery to the host controller, however, do not connect a backup battery.

* 3. Customers must purchase a 24 VDC power supply with double-shielded enclosure.

* 4. Enabled when using the absolute encoder.

Note: The functions allocated to the input signals SI0 to SI6 and the output signals SO1 to SO3 can be changed by using the parameters. Refer to *7.3.2 Input Circuit Signal Allocation* and *7.3.3 Output Circuit Signal Allocation*.

6.3.3 Torque Control Mode

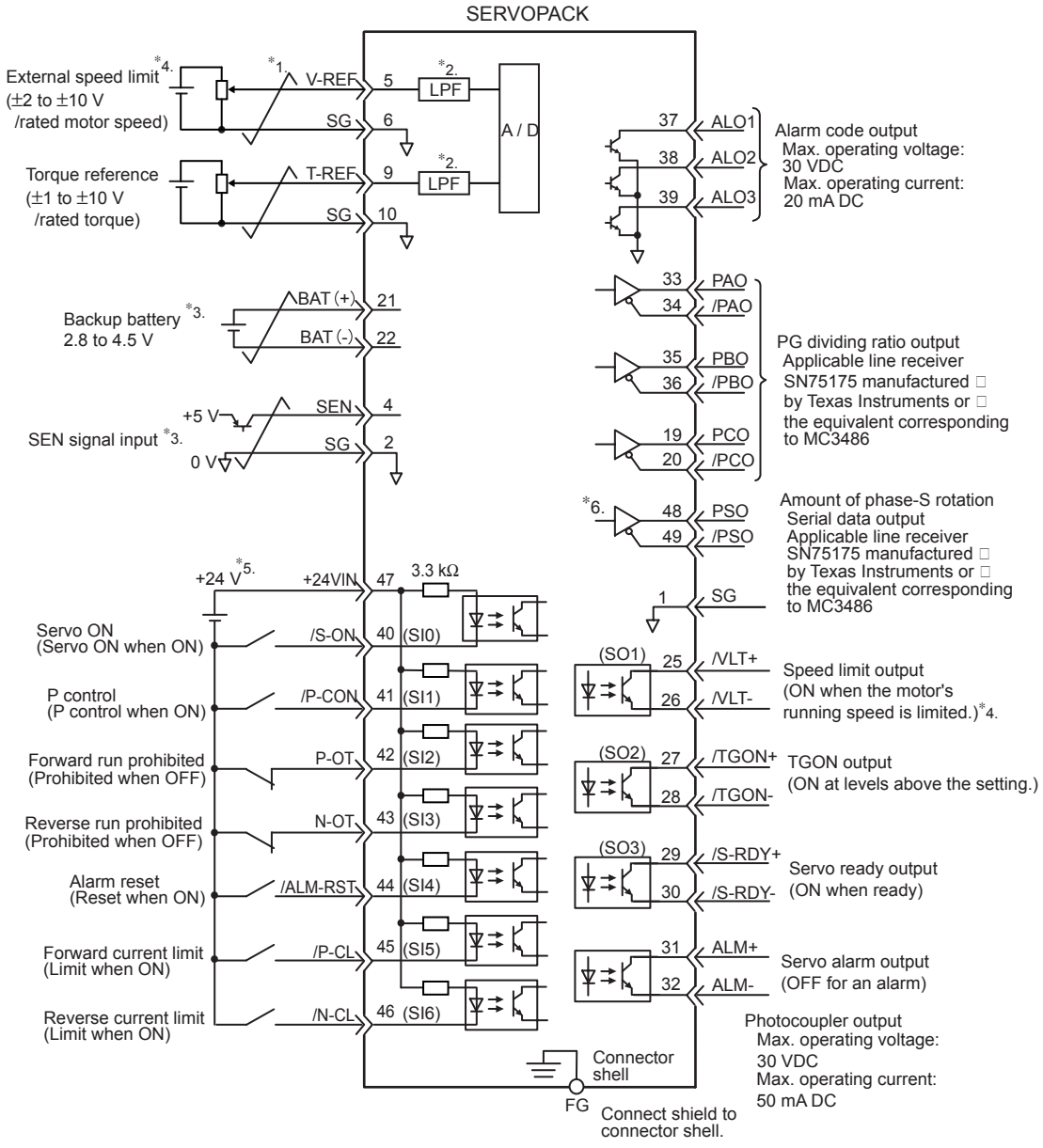

* 1. : represents twisted-pair wires.
* 2. The time constant for the primary filter is 47 μs.
* 3. Connect a backup battery when using an absolute encoder. When connecting a battery to the host controller, however, do not connect a backup battery.
* 4. Enabled by the parameter setting.
* 5. Customers must purchase a 24 VDC power supply with double-shielded enclosure.
* 6. Enabled when using the absolute encoder.

Note: The functions allocated to the input signals SI0 to SI6 and the output signals SO1 to SO3 can be changed by using the parameters. Refer to *7.3.2 Input Circuit Signal Allocation* and *7.3.3 Output Circuit Signal Allocation*.

6.3.4 I/O Signal Connector (CN1) Terminal Layout

The following diagram shows the terminal layout and the signals that are preset before shipping.

Pin Number	Signal Name	Function
2	SG	GND
4	SEN	SEN signal input
6	SG	GND
8	/PULS	Reference pulse input
10	SG	GND
12	/SIGN	Reference sign input
14	/CLR	Clear input
16	–	–
18	PL3	Open-collector reference power supply
20	/PCO	PG dividing pulse output Phase C
22	BAT (-)	Battery (-)
24	–	–

1	SG	GND
3	PL1	Open-collector reference power supply
5	V-REF	Speed reference input
7	PULS	Reference pulse input
9	T-REF	Torque reference input
11	SIGN	Reference sign input
13	PL2	Open-collector reference power supply
15	CLR	Clear input
17	–	–
19	PCO	PG dividing pulse output Phase C
21	BAT (+)	Battery (+)
23	–	–
25	/V-CMP+ (/COIN+)	Speed coincidence detection output

27	/TGON+	Running signal output
29	/S-RDY+	Servo ready output
31	ALM+	Servo alarm output
33	PAO	PG dividing pulse output Phase A
35	PBO	PG dividing pulse output Phase B
37	ALO1	Alarm code output
39	ALO3	Alarm code output
41	/P-CON	P control input
43	N-OT	Reverse run prohibit input
45	/P-CL	Forward external torque limit input
47	+24V IN	External input power supply
49	/PSO	Phase-S signal output

26	/V-CMP- (/COIN-)	Speed coincidence detection output
28	/TGON-	Running signal output
30	/S-RDY-	Servo ready output
32	ALM-	Servo alarm output
34	/PAO	PG dividing pulse output Phase A
36	/PBO	PG dividing pulse output Phase B
38	ALO2	Alarm code output
40	/S-ON	Servo ON input
42	P-OT	Forward run prohibit input
44	/ALM-RST	Alarm reset input
46	/N-CL	Reverse external torque limit input
48	PSO	Phase-S signal output
50	–	–

Note: 1. Do not use unused terminals for relays.
2. Connect the shield of the I/O signal cable to the connector shell.
Connect to the FG (frame ground) at the SERVOPACK-end connector.
3. The functions allocated to the following input and output signals can be changed by using the parameters. Refer to *7.3.2 Input Circuit Signal Allocation* and *7.3.3 Output Circuit Signal Allocation.*
- Input signals: /S-ON, /P-CON, P-OT, N-OT, /ALM-RST, /P-CL, and /N-CL
- Output signals: /TGON, /S-RDY, and /V-CMP (/COIN)
- The above output signals can be changed to /CLT, /VLT, /BK, /WARN, and /NEAR.

6.3.5 I/O Signal (CN1) Names and Functions

(1) Input Signals

Signal Name		Pin No.	Function		Reference
Common	/S-ON	40	Servo ON: Turns ON the servomotor when the gate block in the inverter is released.		8.3.1
	/P-CON	41	Function selected by parameter.		–
			Proportional control reference	Switches the speed control loop from PI (proportional/ integral) to P (proportional) control when ON.	9.4.4
			Direction reference	With the internal set speed selected: Switch the rotation direction.	8.8.2
			Control mode switching	Position ↔ speed Position ↔ torque Torque ↔ speed } Enables control mode switching.	8.10.1 8.10.2
			Zero-clamp reference	Speed control with zero-clamp function: Reference speed is zero when ON.	8.5.6
			Reference pulse block	Position control with reference pulse stop: Stops reference pulse input when ON.	8.6.7
	P-OT N-OT	42 43	Forward run prohibited Reverse run prohibited	Overtravel prohibited: Stops servomotor when movable part travels beyond the allowable range of motion.	8.3.3
	/P-CL /N-CL	45 46	Function selected by parameter.		–
			Forward external torque limit ON Reverse external torque limit ON	Current limit function enabled when ON.	8.9.2
			Internal speed switching	With the internal set speed selected: Switches the internal speed settings.	8.8
	/ALM-RST	44	Alarm reset: Releases the servo alarm state.		8.11.1
	+24VIN	47	Control power supply input for sequence signals: Users must provide the +24 V power supply. Allowable voltage fluctuation range: 11 to 25 V		6.3.6
	SEN	4 (2)	Initial data request signal when using an absolute encoder.		8.4.1
	BAT (+) BAT (-)	21 22	Connecting pin for the absolute encoder backup battery. Do not connect when a battery is connected to the host controller.		8.4.1 6.2
Speed	V-REF	5 (6)	Speed reference speed input: ±2 to ±10 V/rated motor speed (Input gain can be modified using a parameter.)		8.5.2
Torque	T-REF	9 (10)	Torque reference input: ±1 to ±10 V/rated motor torque (Input gain can be modified using a parameter.)		8.7.2
Position	PULS /PULS SIGN /SIGN	7 8 11 12	Reference pulse input for only line driver	Input mode is set from the following pulses. • Sign + pulse string • CCW/CW pulse • Two-phase pulse (90° phase differential)	8.6.1
	CLR /CLR	15 14	Positional error pulse clear input: Clears the positional error pulse during position control.		8.6.1
	PL1 PL2 PL3	3 13 18	+12 V pull-up power is supplied when PULS, SIGN, and CLR reference signals are open-collector outputs (+12 V power supply is built into the SERVOPACK).		6.3.6

Note: 1. Pin numbers in parentheses () indicate signal grounds.
2. The functions allocated to /S-ON, /P-CON. P-OT, N-OT, /ALM-RST, /P-CL, and /N-CL input signals can be changed by using the parameters. Refer to *7.3.2 Input Circuit Signal Allocation*.
3. The voltage input range for speed and torque references is a maximum of ±12 V.

(2) Output Signals

Signal Name		Pin No.	Function		Reference
Common	ALM+ ALM-	31 32	Servo alarm: Turns OFF when an error is detected.		8.11.1
	/TGON+ /TGON-	27 28	Detection during servomotor rotation: Detects when the servomotor is rotating at a speed higher than the motor speed setting. Detection speed can be set by using the parameters.		8.11.3
	/S-RDY+ /S-RDY-	29 30	Servo ready: ON if there is no servo alarm when the control/main circuit power supply is turned ON.		8.11.4
	PAO /PAO	33 (1) 34	Phase-A signal	Converted two-phase pulse (phases A and B) encoder output signal and zero-point pulse (phase C) signal: RS-422 or the equivalent (Proper line receiver is SN75175 manufactured by Texas Instruments or the equivalent corresponding to MC3486.)	6.2 6.3.1 8.4.6 8.5.7
	PBO /PBO	35 36	Phase-B signal		
	PCO /PCO	19 20	Phase-C signal		
	PSO /PSO	48 49	Phase-S signal	With an absolute encoder: Outputs serial data corresponding to the number of revolutions (RS-422 or the equivalent)	
	ALO1 ALO2 ALO3	37 38 39 (1)	Alarm code output: Outputs 3-bit alarm codes. Open-collector: 30 V and 20 mA rating maximum		8.11.1
	FG	Shell	Connected to frame ground if the shield wire of the I/O signal cable is connected to the connector shell.		–
Speed	/V-CMP+ /V-CMP-	25 26	Speed coincidence (output in Speed Control Mode): Detects whether the motor speed is within the setting range and if it matches the reference speed value.		8.5.8
Position	/COIN+ /COIN-	25 26	Positioning completed (output in Position Control Mode): Turns ON when the number of positional error pulses reaches the value set. The setting is the number of positional error pulses set in reference units (input pulse units defined by the electronic gear).		8.6.5
Reserved	/CLT /VLT /BK /WARN /NEAR	–	Reserved terminals The functions allocated to /TGON, /S-RDY, and /V-CMP (/COIN) can be changed by using the parameters. /CLT, /VLT, /BK, /WARN, and /NEAR signals can also be changed.		8.3.4 8.6.6 8.7.4 8.9.5 8.11.2
	–	16 17 23 24 50	Terminals not used Do not connect relays to these terminals.		–

Note: 1. Pin numbers in parentheses () indicate signal grounds.
2. The functions allocated to /TGON, /S-RDY, and /V-CMP (/COIN) can be changed by using the parameters. /CLT, /VLT, /BK, /WARN, and /NEAR signals can also be changed. Refer to *7.3.3 Output Circuit Signal Allocation*.

6.3.6 Interface Circuit

This section shows examples of SERVOPACK I/O signal connection to the host controller.

(1) Interface for Reference Input Circuits

(a) Analog Input Circuit

CN1 connector terminals, 5-6: Speed reference input and 9-10: Torque reference input are explained below.

Analog signals are either speed or torque reference signals at the impedance below.

- Reference speed input: About 14 kΩ
- Reference torque input: About 14 kΩ

The maximum allowable voltages for input signals is ±12 V.

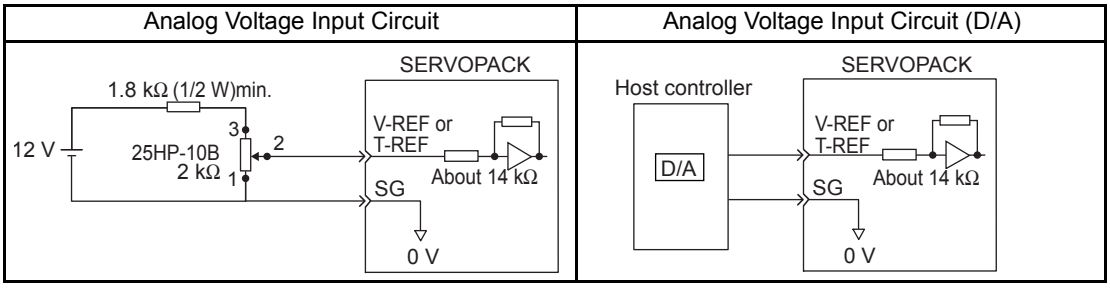

(b) Position Reference Input Circuit

CN1 connector terminals, 7-8: Reference pulse input, 11-12: Reference code input and 15-14: Clear input are explained below.

An output circuit for the reference pulse and position error pulse clear signal at the host controller can be either line-driver or open-collector outputs. The following shows by type.

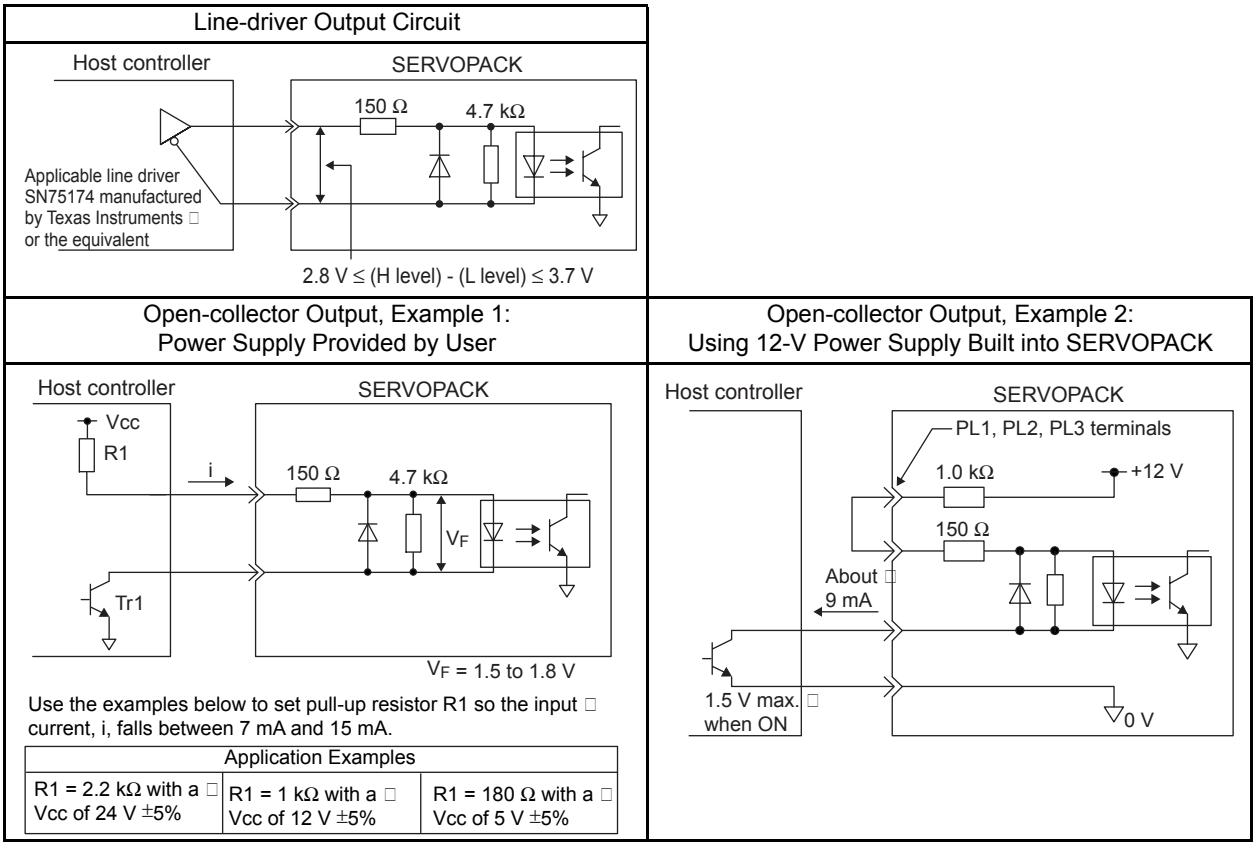

(2) Sequence Input Circuit Interface

CN1 connector terminals 40 to 47 is explained below.

The sequence input circuit interface connects through a relay or open-collector transistor circuit. Select a low-current relay otherwise a faulty contact will result.

Relay Circuit Example	Open-collector Circuit Example
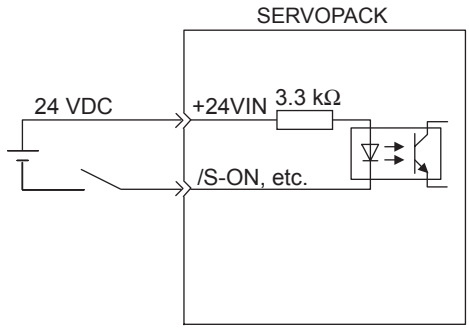	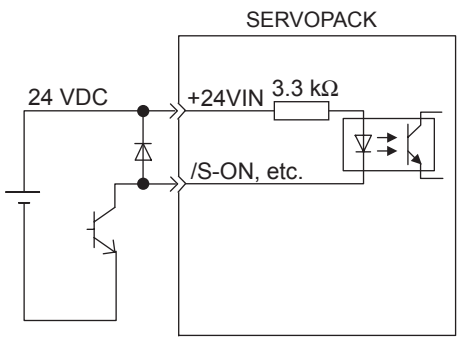

Note: The 24 VDC external power supply capacity must be 50 mA minimum.

INFO For SEN input signal circuit, refer to *8.4 Absolute Encoders*.

(3) Sink Circuit and Source Circuit

The SERVOPACK's I/O circuit uses a bidirectional photocoupler. Select either the sink circuit or the source circuit according to the specifications required for each machine.

Sink Circuit	Source Circuit
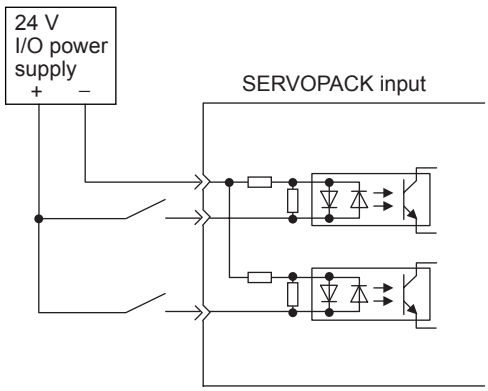	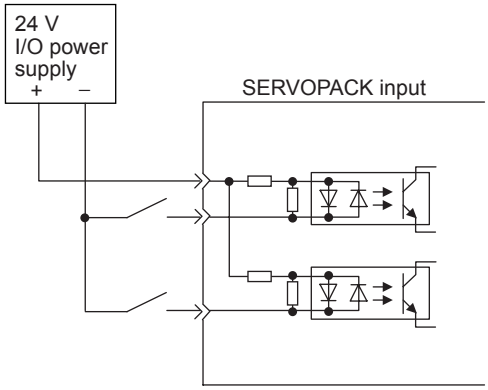

(4) Output Circuit Interface

There are three types of SERVOPACK output circuits:

(a) Line Driver Output Circuit

CN1 connector terminals, 33-34: phase-A signal, 35-36: phase-B signal and 19-20: phase-C signal are explained below.

Encoder serial data converted to two-phase (phases A and B) pulse output signals (PAO, /PAO, PBO, /PBO), zero-point pulse signals (PCO, /PCO), and the amount of phase-S rotation signal are output via line-driver output circuits. Normally, the SERVOPACK uses this output circuit in speed control to comprise the position control system at the host controller. Connect the line-driver output circuit through a line receiver circuit at the host controller.

(b) Open-collector Output Circuit

CN1 connector terminals 37 to 39: Alarm code output are explained below.

Alarm code signals (ALO1, ALO2, ALO3) are output from open-collector transistor output circuits. Connect an open-collector output circuit through a photocoupler, relay circuit, or line receiver circuit.

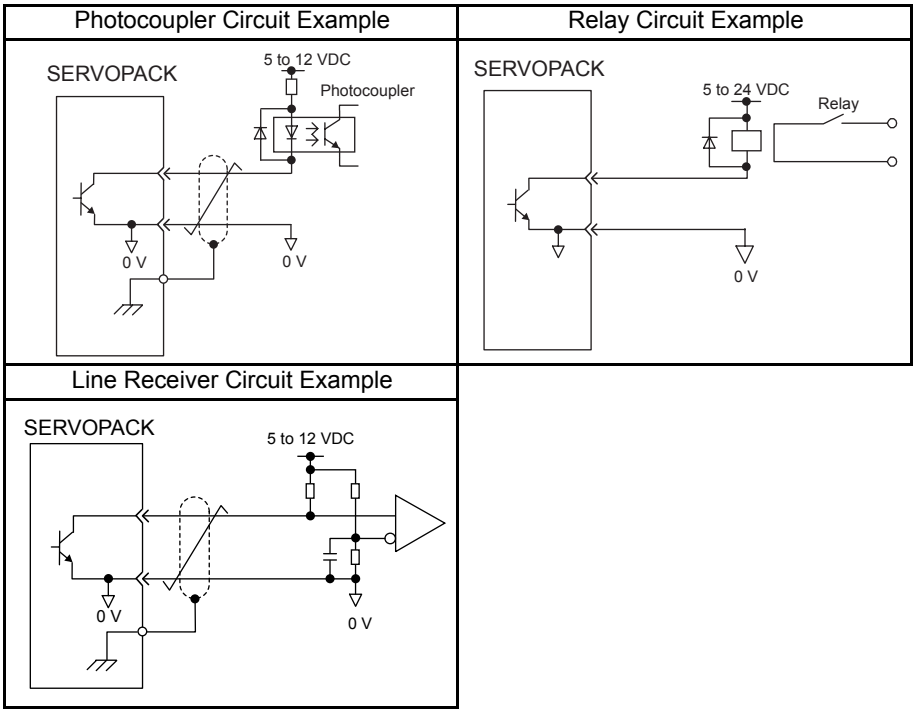

Note: The maximum allowable voltage and current capacities for open-collector output circuits are as follows:

- Voltage: 30 VDC
- Current: 20 mA DC

(c) Photocoupler Output Circuit

Photocoupler output circuits are used for servo alarm (ALM), servo ready (/S-RDY), and other sequence output signal circuits. Connect a photocoupler output circuit through a relay circuit or line receiver circuit.

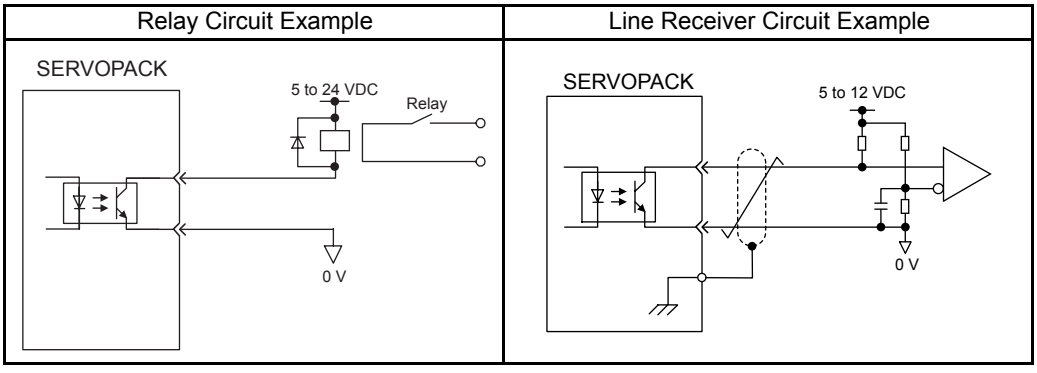

Note: The maximum allowable voltage and current capacities for photocoupler output circuits are as follows:

- Voltage: 30 VDC
- Current: 50 mA DC

6.4 Others

6.4.1 Wiring Precautions

To ensure safe and stable operation, always observe the following wiring precautions.

IMPORTANT

1. For wiring for reference inputs and encoders, use the specified cables. Refer to *5 Specifications and Dimensional Drawings of Cables and Peripheral Devices* for details.
   Use cables as short as possible.
2. For a ground wire, use as thick a cable as possible (2.0 mm^2 (0.003 in^2) or thicker).
   - At least class-3 ground (100 Ω max.) is recommended.
   - Ground to one point only.
   - If the servomotor is insulated from the machine, ground the servomotor directly.
3. Do not bend or apply tension to cables.
   The conductor of a signal cable is very thin (0.2 to 0.3 mm (0.0079 to 0.012 in)), so handle the cables carefully.
4. Use a noise filter to prevent noise interference.
   (For details, refer to *6.4.2 Wiring for Noise Control*.)
   - If the equipment is to be used near private houses or may receive noise interference, install a noise filter on the input side of the power supply line.
   - Because the SERVOPACK is designed as an industrial device, it provides no mechanism to prevent noise interference.
5. To prevent malfunction due to noise, take the following actions:
   - Position the input reference device and noise filter as close to the SERVOPACK as possible.
   - Always install a surge suppressor in the relay, solenoid and magnetic contactor coils.
   - The distance between a power line (such as a power supply line or servomotor cable) and a signal line must be at least 300 mm (11.81 in). Do not put the power and signal lines in the same duct or bundle them together.
   - Do not share the power supply with an electric welder or electrical discharge machine. When the SERVOPACK is placed near a high-frequency generator, install a noise filter on the input side of the power supply line.
6. Use a molded-case circuit breaker (QF) or fuse to protect the power supply line from high voltage.
   - The SERVOPACK connects directly to a commercial power supply without a transformer, so always use a QF or fuse to protect the SERVOPACK from accidental high voltage.
7. The SERVOPACKs do not have built-in ground protection circuits. To configure a safer system, install an earth leakage breaker for protection against overloads and short-circuiting, or install an earth leakage breaker combined with a wiring circuit breaker for ground protection.

6.4.2 Wiring for Noise Control

(1) Wiring Example

The SERVOPACK uses high-speed switching elements in the main circuit. It may receive “switching noise” from these high-speed switching elements if the processing of wiring or grounding around the SERVOPACK is not appropriate. To prevent this, always wire and ground the SERVOPACK correctly.

The SGDH SERVOPACK has a built-in microprocessor (CPU), so protect it from external noise as much as possible by installing a noise filter in the appropriate place.

The following is an example of wiring for noise control.

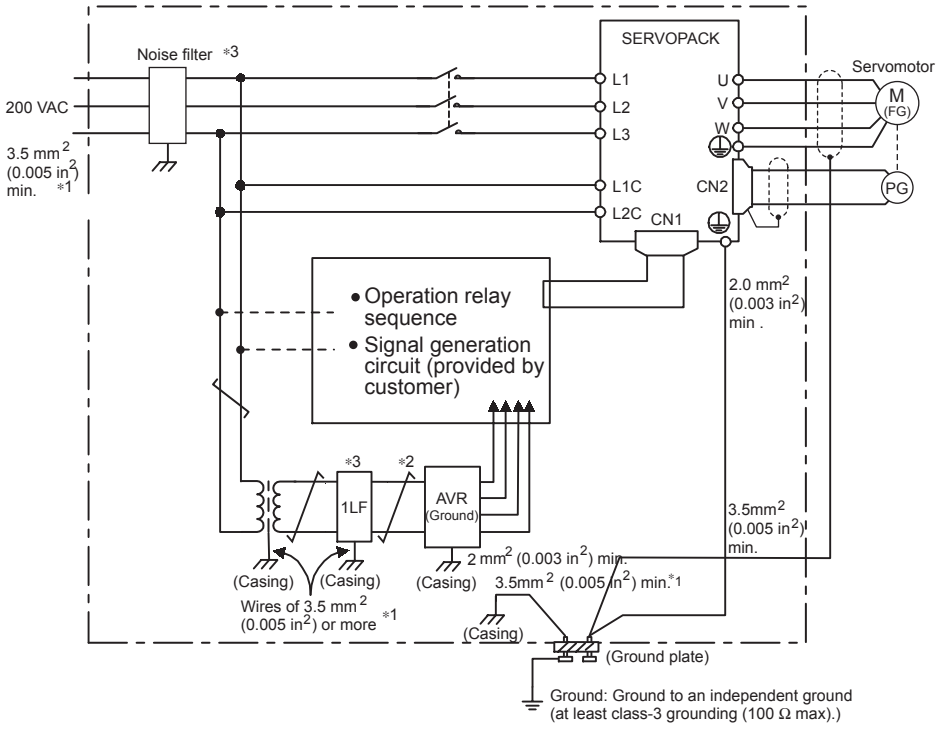

*1 For ground wires connected to the casing, use a thick wire with a thickness of at least 3.5 mm^2 (0.005 in^2) (preferably, plain stitch cooper wire)

*2 : represents twisted-pair wires.

*3 When using a noise filter, follow the precautions in *6.4.2 Wiring for Noise Control □ (3) Using Noise Filter.*

(2) Correct Grounding

(a) Grounding the Motor Frame

Always connect servomotor frame terminal FG to the SERVOPACK ground terminal ⏚. Also be sure to ground the ground terminal ⏚.

If the servomotor is grounded via the machine, a switching noise current will flow from the SERVOPACK power unit through servomotor stray capacitance. The above grounding is required to prevent the adverse effects of switching noise.

(b) Noise on the Reference Input Line

If the reference input line receives noise, ground the 0 V line (SG) of the reference input line. If the main circuit wiring for the motor is accommodated in a metal conduit, ground the conduit and its junction box.

For all grounding, ground at one point only.

(3) Using Noise Filters

Use an inhibit type noise filter to prevent noise from the power supply line. The following table lists recommended noise filters for each SERVOPACK model.

Install a noise filter on the power supply line for peripheral equipment as necessary.

Voltage	SERVOPACK Model	Recommended Noise Filters		
		Model	Specifications	Manufacturer
Single-phase 100 V	SGDH-A3BE to -01BE	FN2070-6/07	Single-phase 250 VAC, 6A	SCHAFFNER
	SGDH-02BE	FN2070-10/07	Single-phase 250 VAC, 10A	
Single-phase 200 V	SGDH-A3AE to -02AE	FN2070-6/07	Single-phase 250 VAC, 6A	
	SGDH-04AE	FN2070-10/07	Single-phase 250 VAC, 10A	
Single-phase 220 V	SGDH-08AE-S	FN2070-16/07	Single-phase 250 VAC, 16A	
	SGDH-15AE-S	FN350-30/33	Single-phase 250 VAC, 30A	
Three-phase 200 V	SGDH-05AE	FN258L-7/07	Three-phase 480 VAC, 7A	
	SGDH-08AE to -20AE	FN258L-16/07	Three-phase 480 VAC, 16A	
	SGDH-30AE	FN258L-30/07	Three-phase 480 VAC, 30A	
	SGDH-50AE, -60AE	FMAC-0934-5010	Three-phase 440 VAC, 50A	TIMONTA
	SGDH-75AE	FMAC-0953-6410	Three-phase 440 VAC, 64A	
	SGDH-1AAE, -1EAE	FS5559-150-35	Three-phase 480 VAC, 150A	SCHAFFNER
Three-phase 400 V	SGDH-05DE to -15DE	FN258L-7/07	Three-phase 480 VAC, 7A	
	SGDH-20DE, -30DE	FN258L-16/07	Three-phase 480 VAC, 16A	
	SGDH-50DE to -75DE	FS5559-35-33	Three-phase 480 VAC, 35A	
	SGDH-1ADE, -1EDE	FS5559-80-34	Three-phase 480 VAC, 80A	

IMPORTANT

■Noise Filter for Brake Power Supplies

If the SERVOPACK has the holding brake less than 400 W, use the following model for the brake power supply input.

Noise filter model: FN2070-6/07 (Manufactured by SCHAFFNER)

■Precautions when using noise filter

Always observe the following installation and wiring instructions. Incorrect use of a noise filter halves its benefits.

1. Do not put the input and output lines in the same duct or bundle them together.

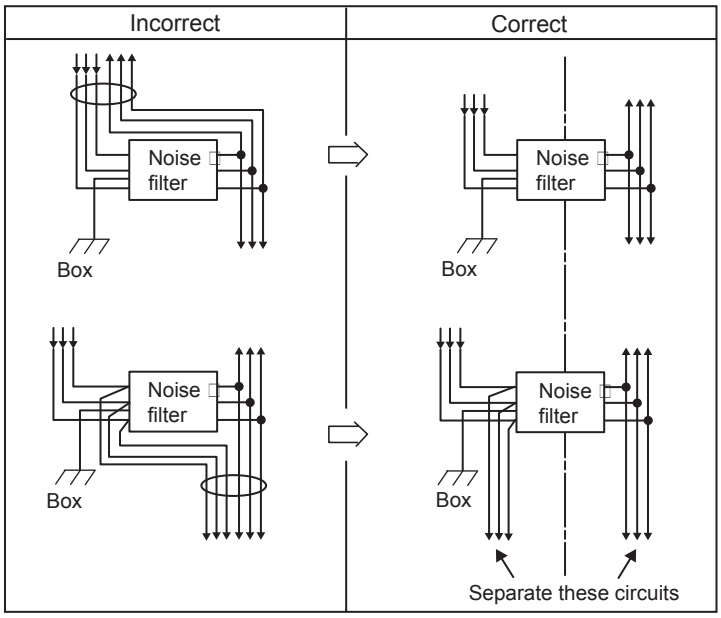

6

2. Separate the noise filter ground wire from the output lines.

   Do not accommodate the noise filter ground wire, output lines, and other signal lines in the same duct or bundle them together.

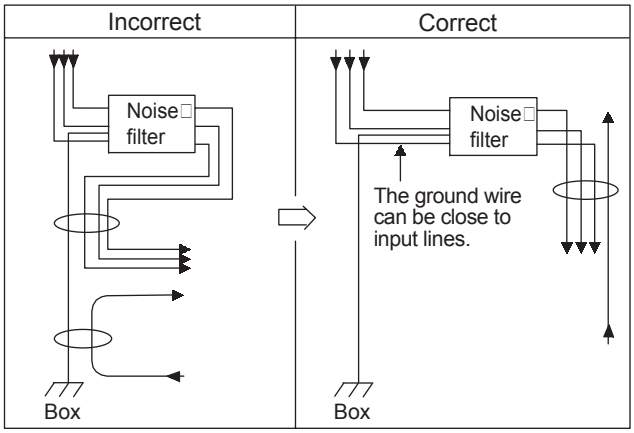

3. Connect the noise filter ground wire directly to the ground plate.

   Do not connect the noise filter ground wire to other ground wires.

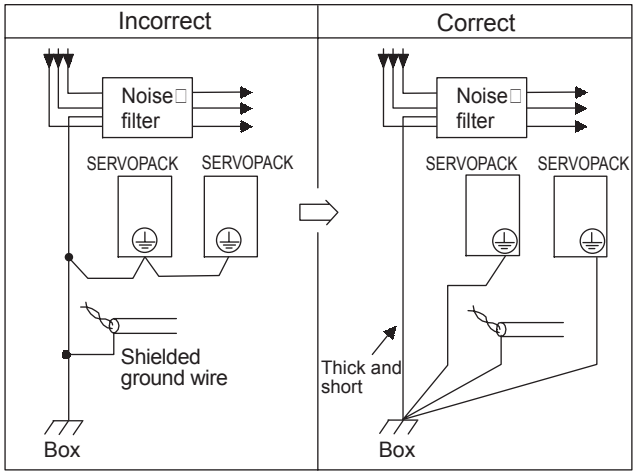

4. When grounding a noise filter inside a unit:

   If a noise filter is located inside a unit, connect the noise filter ground wire and the ground wires from other devices inside the unit to the ground plate for the unit first, then ground these wires.

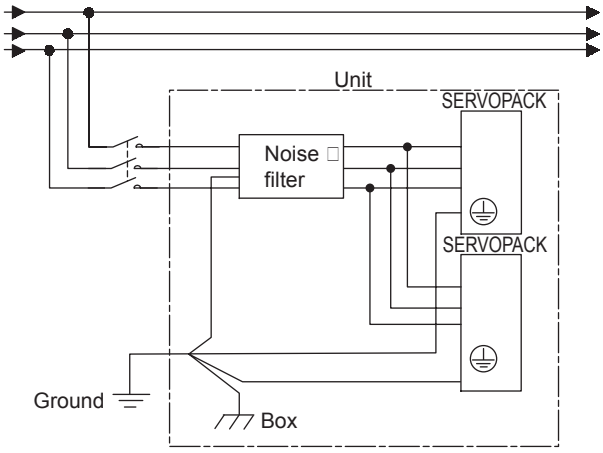

6.4.3 Installation Conditions of EMC Directives

To adapt a combination of a SGM□H servomotor and a SGDH SERVOPACK to EMC Directives (EN50081-2 and EN50082-2), the following conditions must be satisfied.

(1) EMC Installation Conditions

This section describes the installation conditions that satisfy EMC guidelines for each model of the SGDH SERVOPACK. The conditions required for the standard type (base mounted) of SERVOPACK are described. Refer to this section for other SERVOPACK models such as the rack mounted types as well.

This section describes the EMC installation conditions satisfied in test conditions prepared by Yaskawa. The actual EMC level may differ depending on the actual system's configuration, wiring, and other conditions.

(a) Single-phase 100 V/200 V/220 V

SGDH-A3BE to -02BE (Single-phase 100 VAC, 30 to 200 W)
SGDH-A3AE to -04AE (Single-phase 200 VAC, 30 to 400 W)
SGDH-08AE-S (Single-phase 220 VAC, 750 W)
SGDH-15AE-S (Single-phase 220 VAC, 1.5 kW)

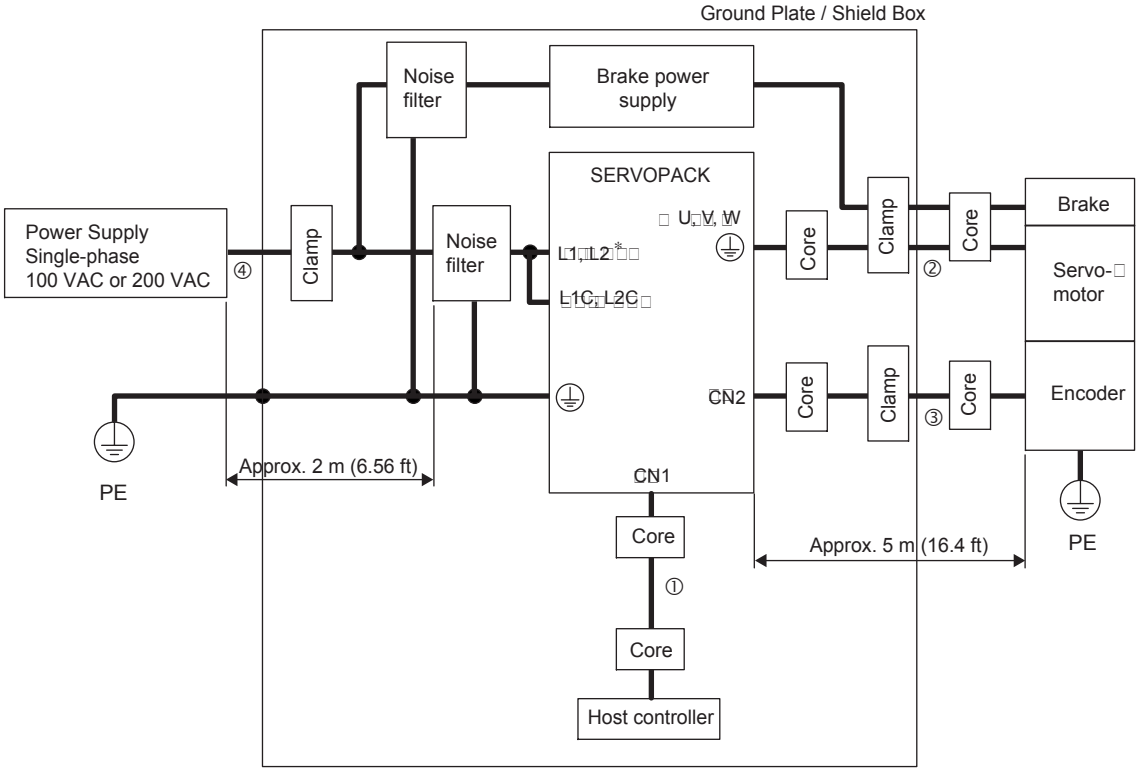

* Connect main circuit power supply to terminals L1-L3 for SGDH-08AE-S and SGDH-15AE-S.

Symbol	Cable Name	Specifications
①	I/O Signals cable	Shield cable
②	Servomotor cable	Shield cable
③	Encoder cable	Shield cable
④	AC Line cable	Shield cable

(b) Three-phase 200 V

SGDH-05AE to -1EAE (Three-phase 200 VAC, 500 W to 15.0 kW)

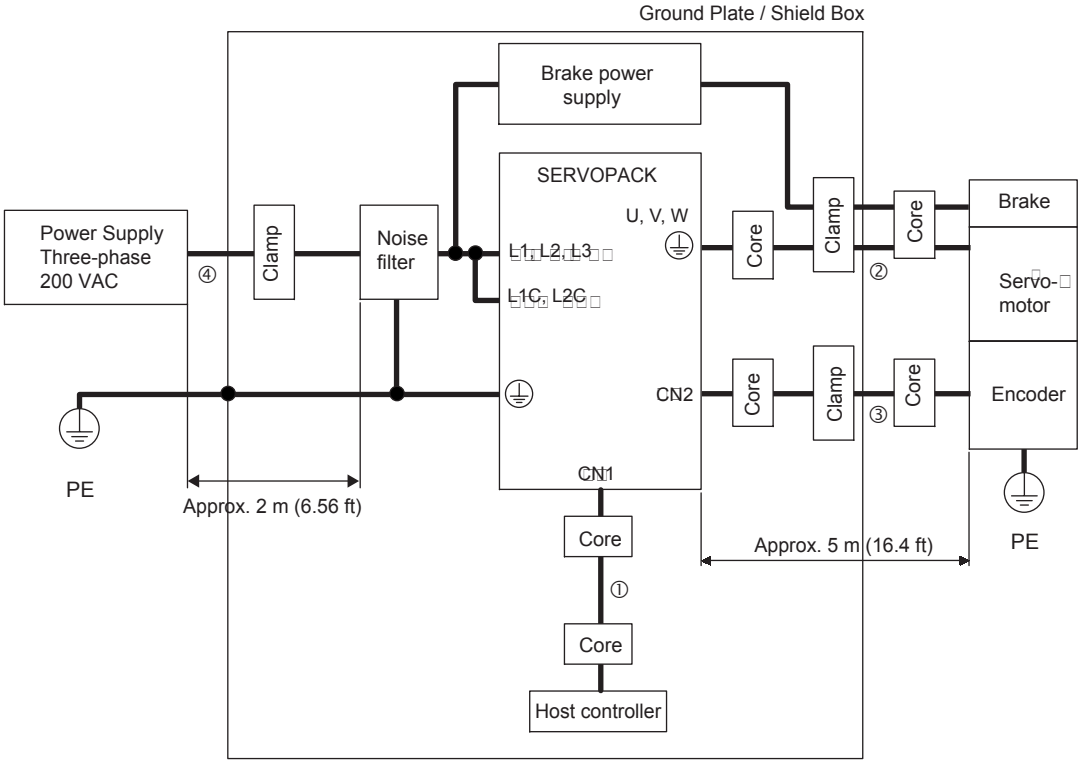

Symbol	Cable Name	Specifications
①	I/O Signals cable	Shield cable
②	Servomotor cable	Shield cable
③	Encoder cable	Shield cable
④	AC Line cable	Shield cable

(c) Three-phase 400 V

SGDH-05DE to -1EDE (Three-phase 400 VAC, 500 W to 15 kW)

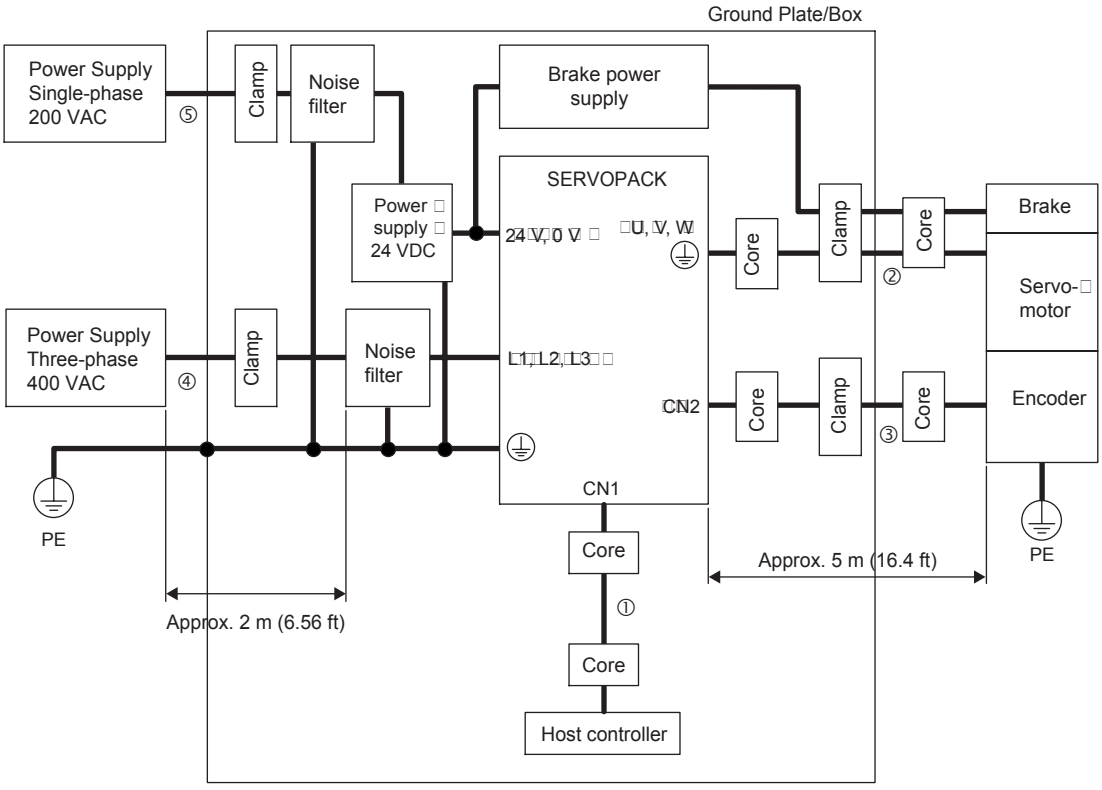

Symbol	Cable Name	Specifications
①	I/O Signals cable	Shield cable
②	Servomotor cable	Shield cable
③	Encoder cable	Shield cable
④	AC Line cable	Shield cable
⑤	AC Line cable	Shield cable

6

(2) Cable Core and Cable Clamp

(a) Attaching the Ferrite Core

The diagram shows two turns in the cable.
The table shows the cable and the position where the ferrite core is attached.

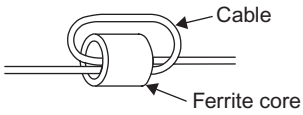

Cable Name	Mounting Position of the Core
I/O signals cable	Near the host controller and the SERVOPACK.
Motor cable	Near the SERVOPACK and the servomotor.
Encoder cable	Near the SERVOPACK and the servomotor.

(b) Recommended Ferrite-core

Cable Name		Ferrite Core Model	Manufacturer
I/O signals cable		ESD-SR-25	Tokin. Corp.
Encoder cable			
Motor cable	400 W or less		
	500 W or more	PC40T96 × 20 × 70	TDK

(c) Fixing the Cable

Fix and ground the cable shield using a piece of conductive metal.

- Example of Cable Clamp

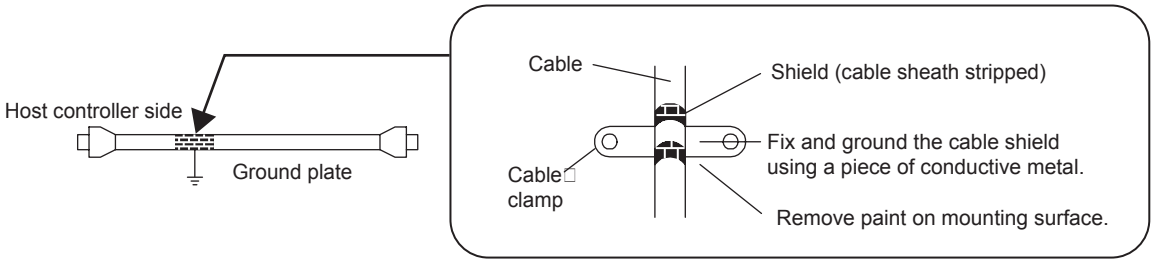

(d) Shield Box

A shield box, which is a closed metallic enclosure, should be used for shielding magnetic interference. The structure of the box should allow the main body, door, and cooling unit to be attached to the ground. The box opening should be as small as possible.

6.4.4 Installation Conditions of UL Standards

To adapt the following SERVOPACKs to UL Standards, use a corresponding terminal kit for cables to connect the terminals described in the table below.

SERVOPACK Model	Connection Terminals	Terminal Kit Model
SGDH-50DE (-P)	24 V, 0 V (Control circuit power supply input)	Ring terminal provided with the SERVOPACK
SGDH-60AE (-P) SGDH-75AE (-P) SGDH-1AAE (-P)	L1, L2, L3 (Main circuit power supply input) U, V, W (Motor Output)	JZSP-CKT75
SGDH-60DE (-P) SGDH-75DE (-P)		JZSP-CKT75DE
SGDH-1ADE (-P)		JZSP-CKT1ADE
SGDH-1EDE (-P)		JZSP-CKT1EDE
SGDH-1EAE (-P)		JZSP-CKT1E

6.4.5 Using More Than One SERVOPACK

The following diagram is an example of the wiring when more than one SERVOPACK is used.

Connect the alarm output (ALM) terminals for the three SERVOPACKs in series to enable alarm detection relay 1RY to operate.

When the alarm occurs, the ALM output signal transistor is turned OFF.

Multiple servos can share a single molded-case circuit breaker (QF) or noise filter. Always select a QF or noise filter that has enough capacity for the total power capacity (load conditions) of those servos. For details, refer to *2.6.2 Molded-case Circuit Breaker and Fuse Capacity*.

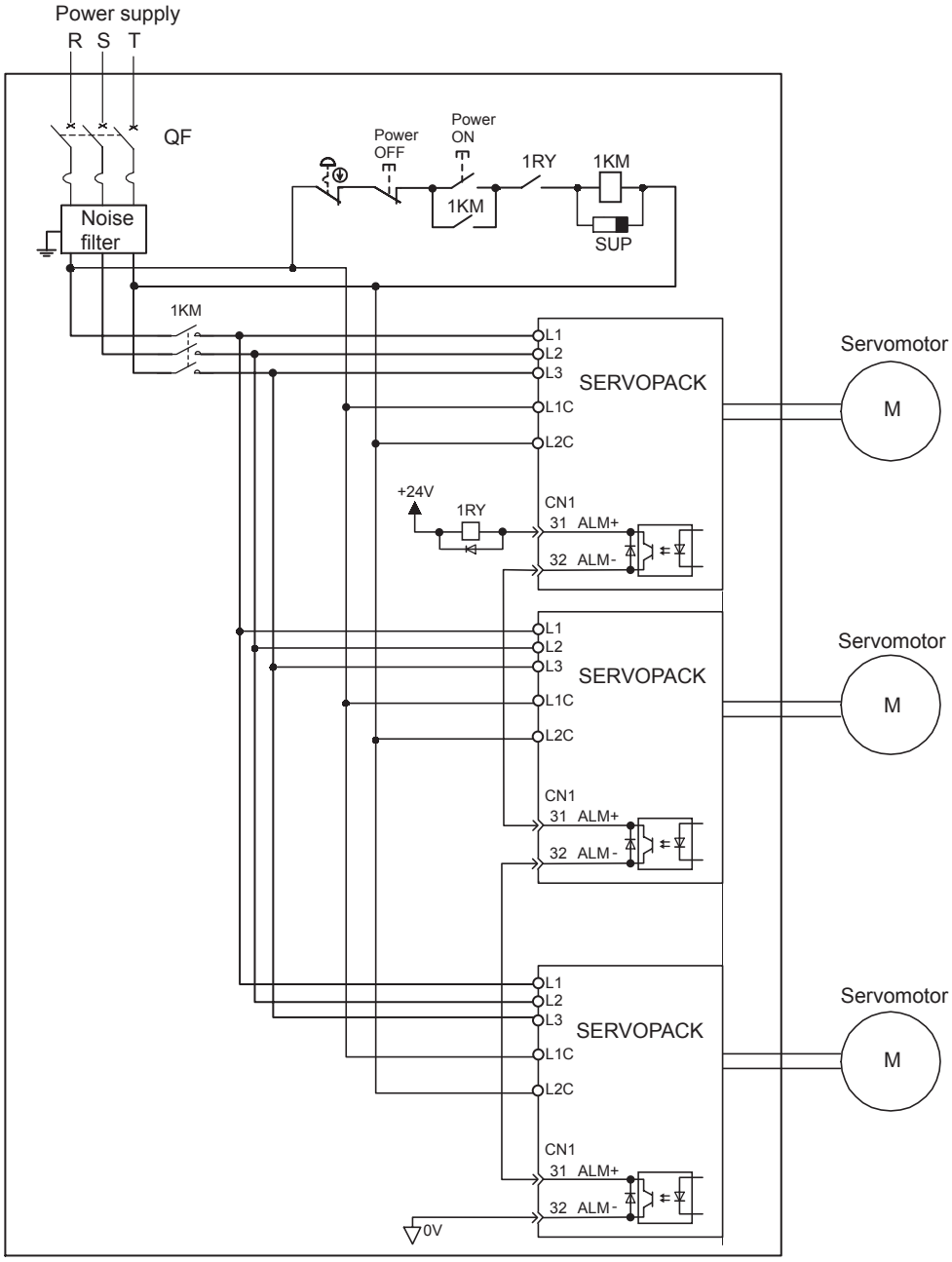

Note: Wire the system, so that the phase-S power supply will be the ground phase.

6.4.6 Extending Encoder Cables

Standard encoder cables have a maximum length of 20 m. If a longer cable is required, prepare an extension cable as described below. The maximum allowable cable length is 50 m.

(1) Specifications for User-modified Cables

Application	Fixed Type
Cable type*	JZSP-CMP19-□□
Cable length	50 m (164.0 ft) max.
Basic Specifications	UL20276 (Max. operating temperature: 80°C (176°F)) AWG16 × 2C + AWG26 × 2P AWG16 (1.31 mm^2) (0.00203 in^2) Insulation covered dimensions: ϕ 2.0 (0.08 in) AWG26 (0.13 mm^2) (0.000201 in^2) Insulation covered dimensions: ϕ 0.91 mm (0.04 in)
Finished Dimensions	ϕ 6.8 mm (0.27 in)
Internal Configuration and Lead Color	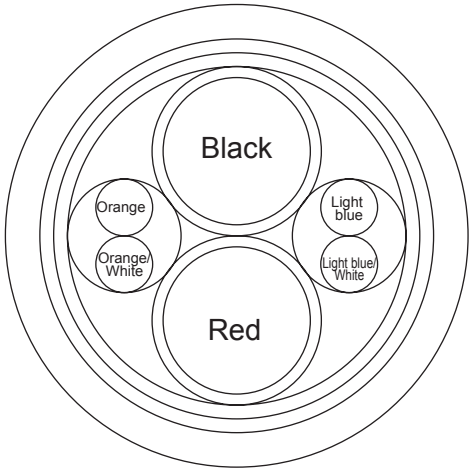
Yaskawa Standards Specifications (Standard Length)	Cable length: 30 m (98.4 ft), 40 m (131.2 ft), 50 m (164.0 ft)

* Specify the cable length in □□ of cable type designation.
(Example) JZSP-CMP19-05 (5 m (16.4 ft))

(2) Connectors and Connector kits for User-modified Encoder Cables

Name			Type	Specifications	Reference
SERVOPACK end connector kit	SGMAH SGMPH SGMGH SGMSH SGMDH SGMUH		JZSP-CMP9-1	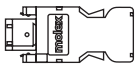	5.5.1
Servomotor end connector kit	SGMAH SGMPH		JZSP-CMP9-2	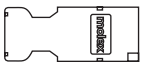	5.4.3 5.4.5 5.5.1
	SGMGH SGMSH SGMDH SGMUH	For standard environment	MS3108B20-29S*1	L-shaped plug 	5.4.4 5.5.2
			MS3106B20-29S*1	Straight plug 	5.4.4 5.5.2
			MS3057-12A*1	Cable clamp 	5.4.4 5.5.2
		For IP67 specification	JA06A-20-29S-J1-EB*2	Straight plug 	5.5.2
			JA08A-20-29S-J1-EB*2	L-shaped plug 	5.5.2
			JL04-2022CKE (09)*2 Cable diameter ϕ6.5 to ϕ9.5	Cable clamp 	5.5.2
			JL04-2022CKE (12)*2 Cable diameter ϕ9.5 to ϕ13		
			JL04-2022CKE (14)*2 Cable diameter ϕ12.9 to ϕ15.9		
Cables			JZSP-CMP19-□	50 m (164.0 ft) max. 	5.5.1

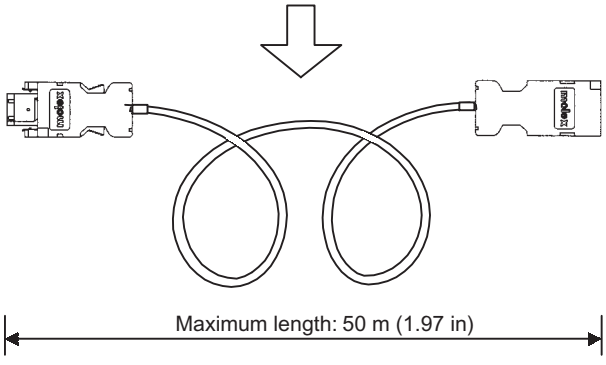

* 1. Contact DDK Electronics, Inc.
* 2. Contact Japan Aviation Electronics Industry, Ltd.

6.4.7 Operating Conditions on 400-V Power Supply Voltage

⚠ CAUTION

- Do not connect the SERVOPACK for 100 V and 200 V directly to a voltage of 400 V.

  The SERVOPACK will be destroyed.
- Control the AC power supply ON and OFF sequence at the primary side of voltage conversion transfer.

  Voltage conversion transfer inductance will cause a surge voltage if the power is turned ON and OFF at the secondary, damaging the SERVOPACK.

There are four types of SGDH SERVOPACKs, for the power supply voltages: Single-phase 100 VAC, single-phase 200 VAC, three-phase 200 VAC, and three-phase 400 VAC. When using the SERVOPACK for 100 V or 200 V with the three-phase 400-VAC class (380 to 480 V), prepare the following voltage conversion transformers (single-phase or three-phase)

Primary Voltage		Secondary Voltage
380 to 480 VAC	→	200 VAC
380 to 480 VAC	→	100 VAC

When selecting a voltage conversion transformer, refer to the capacities shown in the following table.

Voltage	SERVOPACK Model SGDH-	Voltage Capacity per SERVOPACK * (kVA)	Current Capacity of Circuit Breaker or Fuse (Arms)
Single-phase 100 V	A3BE	0.15	4
	A5BE	0.25	
	01BE	0.40	
	02BE	0.60	6
Single-phase 200 V	A3AE	0.20	4
	A5AE	0.25	
	01AE	0.40	
	02AE	0.75	
	04AE	1.2	8
Single-phase 220 V	08AE-S	2.1	11
	15AE-S	4.0	19
Three-phase 200 V	05AE	1.4	4
	08AE	1.9	7
	10AE	2.3	
	15AE	3.2	10
	20AE	4.3	13
	30AE	5.9	17
	50AE	7.5	28
	60AE	12.5	32
	75AE	15.5	41
	1AAE	22.7	60
	1EAE	30.9	81

* This is the net value at the rated load.

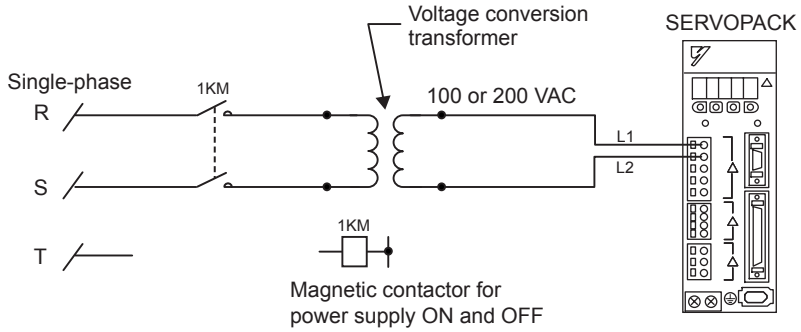

Single-phase Power Supply Connection Example

6.4.8 DC Reactor for Harmonic Suppression

(1) Reactor Types

The SERVOPACK has the DC reactor connection terminals for power supply harmonic suppression. However, SERVOPACKs with capacities of 6 kW or more do not have these terminals. The type of DC reactor to be connected differs depending on the SERVOPACK capacity. Refer to the following table.

Applicable SERVOPACK Model SGDH-		DC Reactor Model	Reactor Specifications	
			Inductance (mH)	Rated Current (A)
Single-phase 100 V	A3BE	–	–	–
	A5BE			
	01BE	X5063	10.0	1.8
	02BE	X5062	4.7	3.5
Single-phase 200 V	A3AE	–	–	–
	A5AE			
	01AE	X5071	40.0	0.85
	02AE	X5070	20.0	1.65
	04AE	X5069	10.0	3.3
Single-phase 220 V	08AE-S	X5079	4.0	5.3
	15AE-S	X5078	2.5	10.5
Three-phase 200 V	05AE	X5061	2.0	4.8
	08AE			
	10AE			
	15AE	X5060	1.5	8.8
	20AE			
	30AE	X5059	1.0	14.0
	50AE	X5068	0.47	26.8
Three-phase 400 V	05DE	X5074	4.7	1.5
	10DE	X5075	3.3	4.5
	15DE			
	20DE	X5076	2.2	8.6
	30DE			
	50DE	X5077	1.5	14.1

Note: Select a proper DC reactor for the input current to the SERVOPACK.
Refer to *2.6.2 Molded-case Circuit Breaker and Fuse Capacity* for input current to each SERVOPACK. For the kind of reactor, refer to *5.8.13 DC Reactor for Harmonic Suppression*.

(2) Connecting a Reactor

Connect a DC reactor as shown in the following diagram. The DC reactor is connected in series to the rectifier circuit's output side.

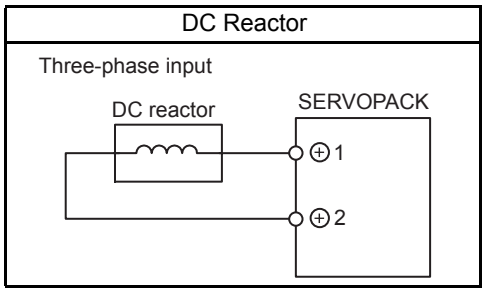

Note: 1. The SERVOPACK ⊕1 and ⊕2 terminals for the DC reactor are short-circuited before shipment. Remove the lead wire between these two terminals and connect the DC reactor with SERVOPACK.
2. DC reactor is an option (Provided by customer).

6.5 Connecting Regenerative Resistors

6.5.1 Regenerative Power and Regenerative Resistance

The rotational energy of driven machine such as servomotor is returned to the SERVOPACK. This is called regenerative power. The regenerative power is absorbed by charging the smoothing capacitor, but when the power exceeds the capacitor's chargeable energy, the regenerative power is further consumed by the regenerative resistor.

The servomotor is driven in regeneration state in the following circumstances:

- While decelerating to a stop during acceleration and deceleration operation.
- Continuous falling operation on the vertical axis.
- During continuous operation with the servomotor rotated from the load side (negative load).

The SERVOPACKs with a capacity of the single-phase 200 V with 30 to 400 W or 100 V with 30 to 200 W do not have built-in regenerative resistors. If the operation exceeds the rotating speed specifications shown in the *4.5.3 Load Moment of Inertia*, connect an external regenerative resistor.

6.5.2 Connecting External Regenerative Resistors

(1) Necessity of External Regenerative Resistors

SERVOPACK Capacity	Necessity of External Regenerative Resistors	Explanation
400 W or less	Not Required	No built-in regenerative resistor is provided, however, normally an external regenerative resistor is not required. Install external regenerative resistors when the smoothing capacitor in SERVOPACK cannot process all the regenerative power.
500 W to 5.0 kW	Not Required	A built-in regenerative resistor is provided as standard. Install external regenerative resistors when the built-in regenerative resistor cannot process all the regenerative power.
6.0 to 15.0 kW	Required	No built-in regenerative resistor is provided, so the external regenerative resistor is required. If the external regenerative resistor is not connected with the SERVOPACK, the alarm30 is detected as a regeneration error alarm.

(2) Specifications of Built-in Regenerative Resistor

If the amount of regenerative energy exceeds the processing capacity of the SERVOPACK, then install an external regenerative resistor. The following table shows the specifications of the SERVOPACK's built-in resistor and the amount of regenerative power (average values) that it can process.

Applicable SERVOPACKs SGDH-		Specifications of Build-in Resistor		Regenerative Power Processed by Built-in Resistor *1 (W)	Minimum Allowable Resistance (Ω)
		Resistance (Ω)	Capacity (W)		
Single-phase 100 V	A3BE to -02BE	–	–	–	40
Single-phase 200 V	A3AE to -04AE	–	–	–	40
Single-phase 220 V	08AE-S	50	60	12	40
	15AE-S	25	140	28	20
Three-phase 200 V	05AE to -10AE	50	60	12	40
	15AE	30	70	14	20
	20AE	25	140	28	12
	30AE	12.5	140	28	12
	50AE	8	280	56	8
	60AE	(6.25) *2	(880) *2	(180) *2	5.8
	75AE to -1EAE	(3.13) *3	(1760) *3	(350) *3	2.9
Three-phase 400 V	05DE to -15DE	108	70	14	73
	20DE, -30DE	45	140	28	44
	50DE	32	180	36	28
	60DE to -75DE	(18) *4	(880) *4	(180) *4	18
	1ADE to -1EDE	(14.25) *5	(1760) *5	(350) *5	14.2

* 1. The average regenerative power that can be handled is 20% of the rated capacity of the regenerative resistor built into the SERVOPACK.
* 2. The values in parentheses are for the optional JUSP-RA04 Regenerative Resistor Unit.
* 3. The values in parentheses are for the optional JUSP-RA05 Regenerative Resistor Unit.
* 4. The values in parentheses are for the optional JUSP-RA18 Regenerative Resistor Unit.
* 5. The values in parentheses are for the optional JUSP-RA19 Regenerative Resistor Unit.

(3) Precautions on Selecting External Regenerative Resistors

A built-in regenerative resistor is provided for 500 W to 5.0 kW SGDH SERVOPACKs as standard.

When installing an external regenerative resistor with the SERVOPACK, make sure that the resistance is the same as that of the SERVOPACK's built-in resistor.

If combining multiple small-capacity regenerative resistors to increase the regenerative resistor capacity (W), select resistors so that the resistance value including error is at least as high as the minimum allowable resistance shown in the following table.

Connecting a regenerative resistor with the resistance smaller than the minimum allowable resistance may increase the current flow in the regeneration circuit, resulting in damage to the circuit.

(4) Parameter Setting

Pn600	Regenerative Resistor Capacity			Speed Position Torque
	Setting Range	Unit	Factory Setting	Setting Validation
	0 to SERVOPACK capacity	10 W	0	Immediately

Be sure to set this parameter when installing an external regenerative resistor with the SERVOPACK.
With the factory setting of "0," the SERVOPACK's built-in resistor is used.
Set the regenerative resistor capacity within tolerance value. When the set value is improper, alarm A.32 is not detected correctly. Also, do not set other than 0 without connecting the regenerative resistor because alarm A.30 or A.33 may be detected.

The set value differs depending on the cooling method of external regenerative resistor:
- For natural air cooling method: Set the value maximum 20 % of the actually installed regenerative resistor capacity (W).
- For forced air cooling method: Set the value maximum 50 % of the actually installed regenerative resistor capacity (W).

For example, set 20 W (100 W × 20 %) for the 100 W external regenerative resistor with natural cooling method: Pn600 = 2 (units: 10 W)

6

IMPORTANT

1. When resistors for power are used at the rated load ratio, the resistor temperature increases to between 200 °C (392 °F) and 300 °C (572 °F). The resistors must be used at or below the rated values. Check with the manufacturer for the resistor's load characteristics. Use the regenerative resistors at no more than 20% of the rated load ratio with natural convection cooling, and no more than 50% of the rated load ratio with forced air cooling.
2. For safety's sake, use the resistors with thermoswitches.

(5) Connecting Regenerative Resistors

IMPORTANT

Do not touch the regenerative resistors because they reach high temperatures. Use heat-resistant, non-flammable wiring and make sure that the wiring does not touch the resistors. Refer to *5.3 SERVOPACK Main Circuit Wire Size* for connecting wire size when connecting an external regenerative resistor.

(a) SERVOPACKs with Capacities of 400W or Less

Connect an external regenerative resistor between B1 and B2 terminals.

Note: The user must provide the regenerative resistor.

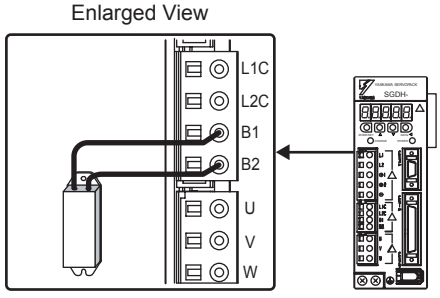

(b) SERVOPACKs with Capacities of 0.5 to 5.0 kW

Disconnect the wiring between the SERVOPACK's B2 and B3 terminals and connect an external regenerative resistor between the B1 and B2 terminals.
The user must provide the regenerative resistor.

Note: Be sure to remove the lead wire between the B2 and B3 terminals.

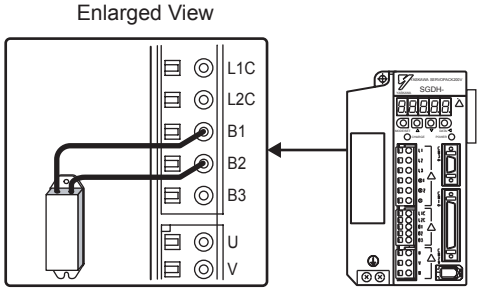

(c) SERVOPACK's with Capacities of 6.0 kW or More

No built-in regenerative resistor is provided, so the external regenerative resistor is required. The special regenerative resistor units are as follow:

Main Circuit Power Supply	Applicable SERVOPACK Model SGDH-	Applicable Regenerative Resistor Unit	Resis-tance (Ω)	Specifications
Three-phase 200 V	60AE	JUSP-RA04	6.25	25 Ω (220 W) × 4 (parallel connection)
	75AE to -1EAE	JUSP-RA05	3.13	25 Ω (220 W) × 8 (parallel connection)
Three-phase 400 V	60DE, -75DE	JUSP-RA18	18	18 Ω (220 W) × 4 (direct/parallel connection)
	1ADE, -1EDE	JUSP-RA19	14.25	28.5 Ω (220 W) × 8 (direct/parallel connection)

The following diagram shows the connection method between the SERVOPACK and the regenerative resistor unit.

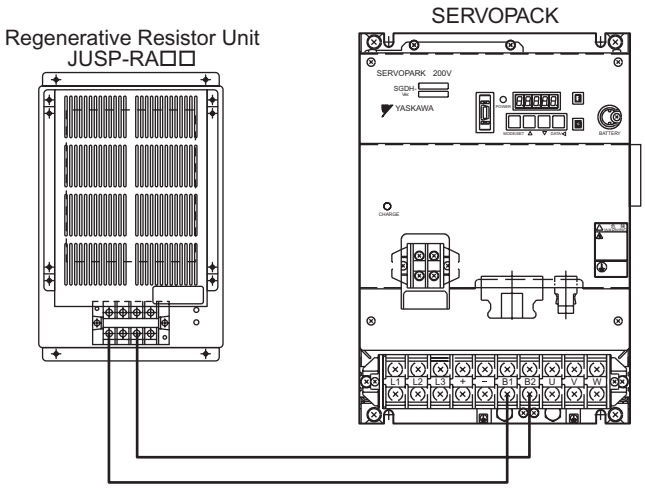

Note: Connect a regenerative resistor unit between B1 and B2 terminals. The regenerative resistor unit is provided by the customer.

6

7

Digital Operator/Panel Operator

7.1 Functions on Digital Operator/Panel Operator - - - - - - - - - - - 7-2
7.1.1 Connecting the Digital Operator - 7-2
7.1.2 Key Names and Functions - 7-3
7.1.3 Basic Mode Selection and Operation - 7-4
7.1.4 Status Display - 7-6

7.2 Operation in Utility Function Mode (Fn□□□) - - - - - - - - - - - - 7-8
7.2.1 List of Utility Function Modes - 7-8
7.2.2 Alarm Traceback Data Display (Fn000) - 7-9
7.2.3 Zero-point Search Mode (Fn003) - 7-10
7.2.4 Parameter Settings Initialization (Fn005) - 7-11
7.2.5 Alarm Traceback Data Clear (Fn006) - 7-12
7.2.6 Automatic Offset-adjustment of Motor Current Detection Signal
(Fn00E) - 7-13
7.2.7 Manual Offset-adjustment of Motor Current Detection Signal
(Fn00F) - 7-14
7.2.8 Password Setting (Protects Parameters from Being Changed)
(Fn010) - 7-15
7.2.9 Motor Models Display (Fn011) - 7-16
7.2.10 Software Version Display (Fn012) - 7-17
7.2.11 Application Module Detection Results Clear (Fn014) - - - - - - - - - - - 7-18

7.3 Operation in Parameter Setting Mode (Pn□□□) - - - - - - - - 7-19
7.3.1 Setting Parameters - 7-19
7.3.2 Input Circuit Signal Allocation - 7-23
7.3.3 Output Circuit Signal Allocation - 7-26

7.4 Operation in Monitor Mode (Un□□□) - - - - - - - - - - - - - - - - - 7-28
7.4.1 List of Monitor Modes - 7-28

7.1 Functions on Digital Operator/Panel Operator

This section describes the basic operations of the digital operator (hereinafter called the digital operator) and the panel operator (hereinafter called the panel operator) for setting the operating conditions. Set parameters and JOG operation, and display status using these operators. For the operation of the digital operator (Model: JUSP-OP02A-2), refer to Σ-II Series SGM□H/SGDM Digital Operator Operation Manual (TOE-S800-34).

7.1.1 Connecting the Digital Operator

Two types of digital operators are available. One is a built-in operator that has a panel indicator and switches located on the front panel of the SERVOPACK. This type of digital operator is also called a panel operator. The other one is a hand-held operator (JUSP-OP02A-2 digital operator), which can be connected to the SERVOPACK with connector CN3 of the SERVOPACK.

There is no need to turn OFF the SERVOPACK to connect this hand-held operator to the SERVOPACK. Refer to the following illustrations to connect the digital operator to the SERVOPACK.

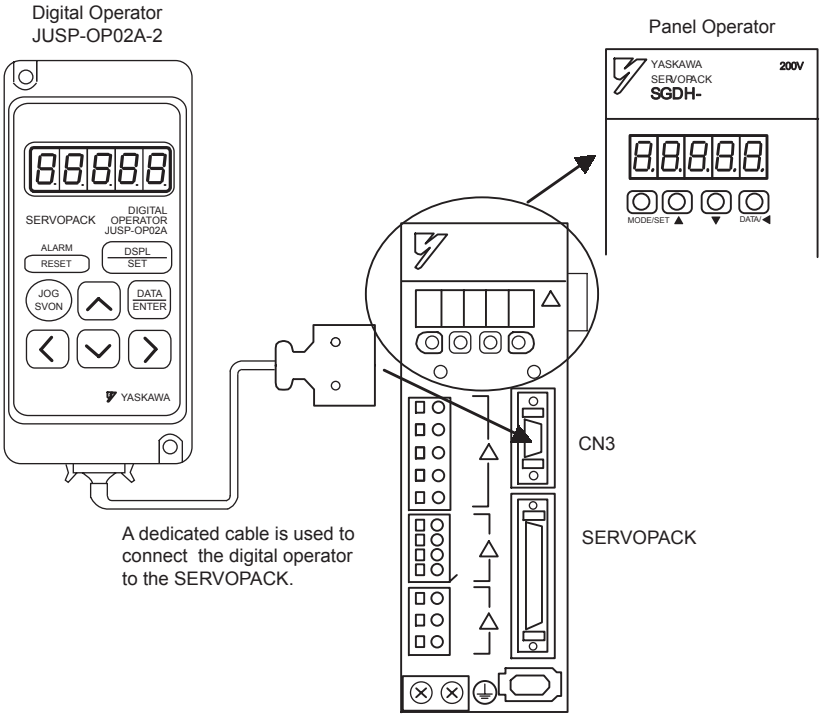

IMPORTANT If the digital operator is connected to the SERVOPACK, the panel operator does not display anything.

7.1.2 Key Names and Functions

Key names and functions for the digital operator and the panel operator are explained below.

Set parameters and JOG operation, and display status using the panel operator.

Digital Operator

SERVOPACK

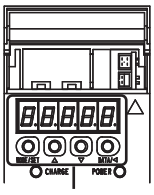

Panel Operator

Key		Function
Digital Operator	Panel Operator	
ALARM RESET (RESET Key)	▲ + ▼ Press simultaneously	To reset the servo alarm. Note 1. The servo alarm can be reset by /ALM-RST (CN1-44) input signal. 2. The servo alarm need not be reset if the control power supply is turned OFF.
DSPL SET (DSPL/SET Key)	MODE/SET (MODE/SET Key)	To select a basic mode, such as the status display mode, utility function mode, parameter setting mode, or monitor mode. Can be also used to set the data.
DATA ENTER (DATA/ENTER Key)	DATA/◀ (DATA/SHIFT Key)	To display parameter setting and set value.
(UP Key)	▲ (UP Key)	Press the UP Key to increase the set value. For JOG operation, this key is used as Forward Run Start Key.
(DOWN Key)	▼ (DOWN Key)	Press the DOWN Key to decrease the set value. For JOG operation, this key is used as Reserve Run Start Key.
(RIGHT Key)	–	Press the RIGHT Key to shift to the next digit on the right.
(LEFT Key)	DATA/◀ (DATA/SHIFT Key)	Press the LEFT or DATA/SHIFT Key to shift to the next digit on the left.
JOG SVON (SVON Key)	MODE/SET (MODE/SET Key)	Press the SVON or MODE/SET Key to perform servo ON/OFF in the JOG operation with the operator.

IMPORTANT

When an alarm occurs, remove the cause, and then reset the alarm. Refer to *10.1 Troubleshooting*.

7.1.3 Basic Mode Selection and Operation

The basic modes include: Status display mode, Utility Function Mode, Parameter Setting Mode, and Monitor Mode.

Select a basic mode to display the operation status, set parameters and operation references.

The basic mode is selected in the following order.

(1) Using the Digital Operator

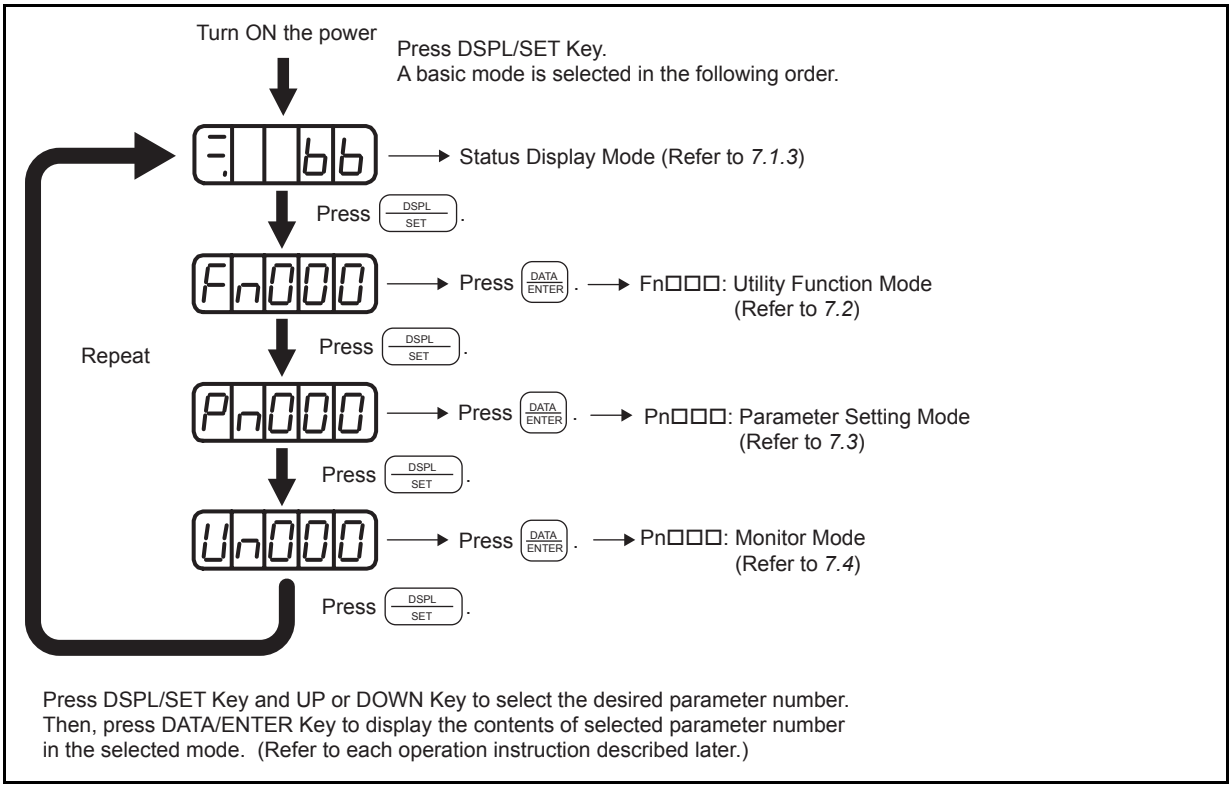

(2) Using the Panel Operator

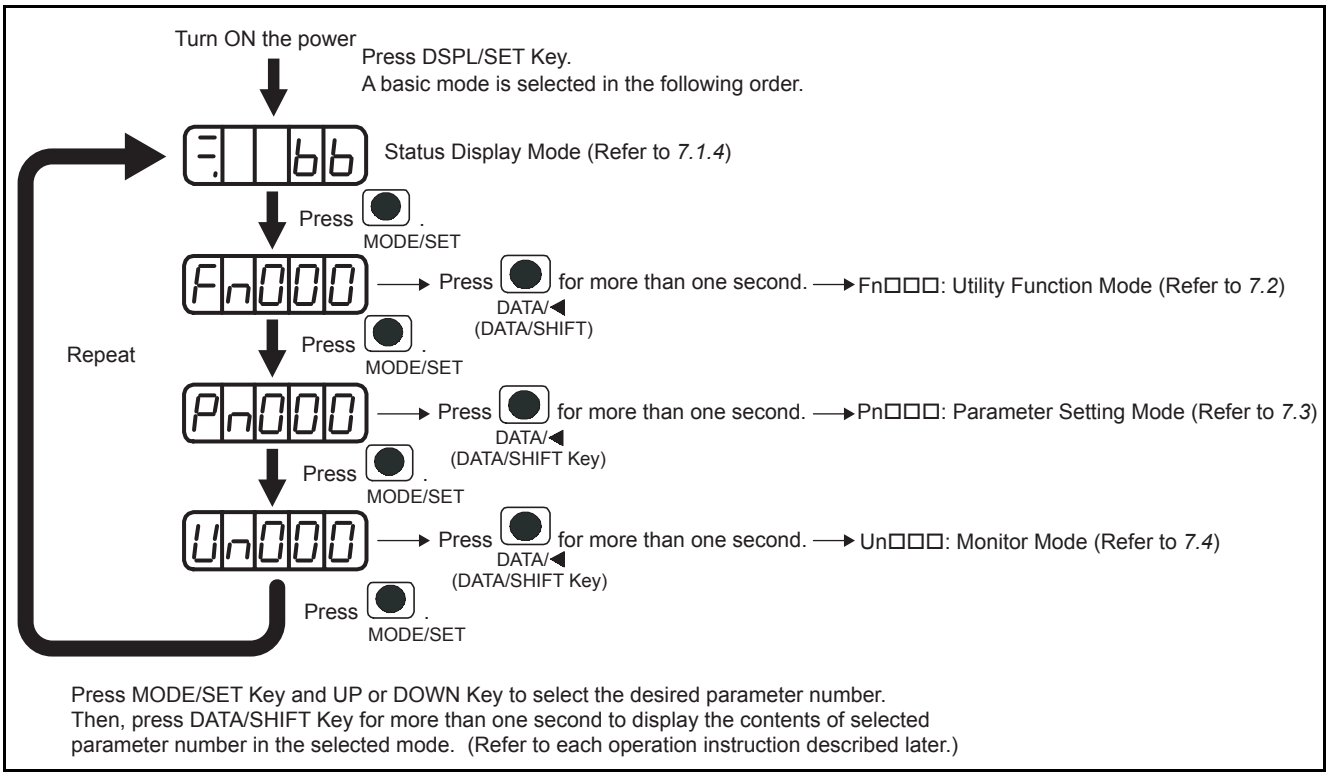

7

7.1.4 Status Display

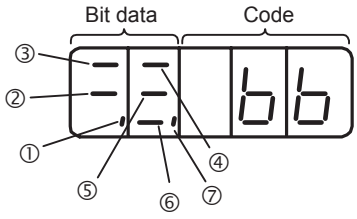

(1) Bit Data and Meanings

Item	Speed or Torque Control Mode		Position Control Mode	
	Bit Data	Meaning	Bit Data	Meaning
①	Control Power ON	Lit when SERVOPACK control power is ON.	Control Power ON	Lit when SERVOPACK control power supply is ON.
②	Baseblock	Lit for baseblock. Not lit when servo is ON.	Baseblock	Lit for baseblock. Not lit when servo is ON.
③	Speed Coincidence (/V-CMP)	Lit when the difference between the motor speed and reference speed is the same as or less than the value set in Pn503. (Factory setting is 10 min^{-1}.) ∗ Always lit in torque control mode.	Positioning Completion (/COIN)	Lit if error between position reference and actual motor position is below preset value. Not lit if error between position reference and actual motor position exceeds preset value. Preset value: Set in Pn500 (Factory setting is 7 pulses.)
④	Rotation Detection (/TGON)	Lit if motor speed exceeds preset value. Not lit if motor speed is below preset value. Preset value: Set in Pn502 (Factory setting is 20 min^{-1}.)	Rotation Detection (/TGON)	Lit if motor speed exceeds preset value. Not lit if motor speed is below preset value. Preset value: Set in Pn502 (Factory setting is 20 min^{-1}.)
⑤	Speed Reference Input	Lit if input speed reference exceeds preset value. Not lit if input speed reference is below preset value. Preset value: Set in Pn502 (Factory setting is 20 min^{-1}.)	Reference Pulse Input	Lit if reference pulse is input. Not lit if no reference pulse is input.
⑥	Torque Reference Input	Lit if input torque reference exceeds preset value. Not lit if input torque reference is below preset value. Preset value: 10% of rated torque	Error Counter Clear Signal Input	Lit when error counter clear signal is input. Not lit when error counter clear signal is not input.
⑦	Power Ready	Lit when main circuit power supply is ON and normal. Not lit when main circuit power supply power is OFF.	Power Ready	Lit when main circuit power supply is ON and normal. Not lit when main circuit power supply power is OFF.

(2) Codes and Meanings

Code	Meaning
bb	Baseblock Servo OFF (motor power OFF)
run	Run Servo ON (motor power ON)
Pot	Forward Run Prohibited CN1-42 (P-OT) is OFF.
not	Reverse Run Prohibited CN1-43 (N-OT) is OFF.
A.02	Alarm Status Displays the alarm number.
A.03 :	

7.2 Operation in Utility Function Mode (Fn□□□)

7.2.1 List of Utility Function Modes

This section describes how to apply the basic operations using the panel operator to run and adjust the motor. The following table shows the parameters in the utility function mode.

Parameter No.	Function	Remarks	Reference Section
Fn000	Alarm traceback data display	–	7.2.2
Fn001	Rigidity setting during online autotuning	○	9.2.4
Fn002	JOG mode operation	○	8.1.1
Fn003	Zero-point search mode	○	7.2.3
Fn004	Fixed parameter	○	–
Fn005	Parameter setting initialization	○	7.2.4
Fn006	Alarm traceback data clear	○	7.2.5
Fn007	Writing to EEPROM moment of inertia ratio data obtained from online autotuning	○	9.2.7
Fn008	Absolute encoder multiturn reset and encoder alarm reset	○	8.4.5
Fn009	Automatic tuning of analog (speed, torque) reference offset	○	8.5.3 8.7.3
Fn00A	Manual adjustment of speed reference offset	○	8.5.3
Fn00B	Manual adjustment of torque reference offset	○	8.7.3
Fn00C	Manual zero-adjustment of analog monitor output	○	–
Fn00D	Manual gain-adjustment of analog monitor output	○	–
Fn00E	Automatic offset-adjustment of motor current detection signal	○	7.2.6
Fn00F	Manual offset-adjustment of motor current detection signal	○	7.2.7
Fn010	Password setting (protects parameters from being changed)	–	7.2.8
Fn011	Motor models display	–	7.2.9
Fn012	Software version display	–	7.2.10
Fn013	Multiturn limit setting change when a Multiturn Limit Disagreement Alarm (A.CC) occurs	○	8.4.8
Fn014	Application module detection results clear	○	7.2.11

Note: When the parameters marked with "○" in remarks column or in Pn□□□ are set for Password Setting (Fn010), the indication shown below appears and such parameters cannot be changed.

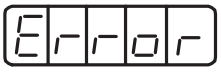

Blinks for one second

7.2.2 Alarm Traceback Data Display (Fn000)

The alarm traceback display can display up to 10 previously occurred alarms. The alarm data is displayed on Fn000, which is stocked in the alarm traceback data. The data can be cleared using an utility function mode "Alarm Traceback Data Clear." For details, refer to *7.2.5 Alarm Traceback Data Clear (Fn006)*.
The alarm traceback data is not cleared on alarm reset or when the SERVOPACK power is turned OFF. This does not adversely affect operation.

Alarm Sequence Number
The higher the number, the older the alarm data is.

Alarm Code
See the alarm table.

The following alarm are operator-related alarms which are not recorded in the traceback data.

Display	Description
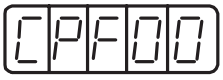	Digital operator transmission error 1
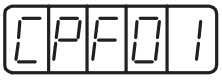	Digital operator transmission error 2

Refer to *10.1 Troubleshooting* for alarm number and contents.

INFO

1. Alarm traceback data will not be updated when the same alarm occurs repetitively.
2. The display "A.--" means no alarm occurs.

Follow the procedure below to confirm alarms which have been generated.

Step	Display after Operation	Digital Operator	Panel Operator	Description
1	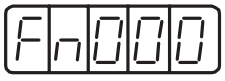	DSPL/SET (DSPL/SET Key)	MODE/SET (MODE/SET Key)	Press the DSPL/SET or MODE/SET Key to select "Alarm Traceback Data Display (Fn000)." If a number other than Fn000 is displayed, press UP Key or DOWN Key to set Fn000. Note: The enabled digit blinks.
2		DATA/ENTER (DATA/ENTER Key)	DATA◀ (DATA/SHIFT Key) (Press at least 1 s.)	Press the DATA/ENTER Key once, or DATA/SHIFT Key for more than one second. The latest alarm data is displayed.
3		(UP Key)	▲ (UP Key)	Press the UP Key to display the data for a previous alarm. (To display one newer alarm data, press DOWN Key.) Note: The higher the digit on the far left, the older the alarm data is.
4		(UP Key)	▲ (UP Key)	Press the UP Key to display value in order. Note: "A.--" means no alarm occurs.
5	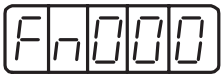	DATA/ENTER (DATA/ENTER Key)	DATA◀ (DATA/SHIFT Key) (Press at least 1 s.)	Press the DATA/ENTER Key once, or DATA/SHIFT Key for more than one second. The display will return to Fn000.

7.2.3 Zero-point Search Mode (Fn003)

⚠ CAUTION

- Forward run prohibited (P-OT) and reverse run prohibited (N-OT) signals are disabled during zero-point search mode operations using Fn003.

The zero-point search mode is designed to perform positioning to the zero-point pulse (phase-C) position of the encoder and to clamp at the position.

This mode is used when the motor shaft needs to be aligned to the machine.

Execute the zero-point search without connecting the motor shaft with the machine.

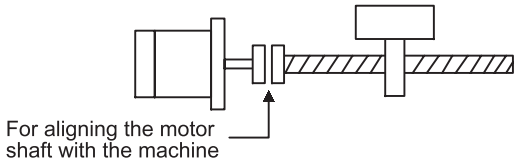

The speed for executing the zero-point search is 60 min^{-1}.

The following conditions must be met to perform the zero-point search operation.

- If the Servo-ON input signal (/S-ON) is ON, turn it OFF.
- Release the Servo-ON signal mask if the parameter Pn 50A.1 is set to 7, and the servo has been set to always be ON.

Follow the procedure below to execute the zero-point search.

Step	Display after Operation	Digital Operator	Panel Operator	Description
1	Fn000	DSPL/SET (DSPL/SET Key)	MODE/SET (MODE/SET Key)	Press the DSPL/SET or MODE/SET Key to select the utility function mode.
2	Fn003	∧ ∨	▲ ▼	Press the UP or DOWN Key to select the Fn003. Note: The enabled digit blinks.
3	-.-.CSr	DATA/ENTER (DATA/ENTER Key)	DATA◀ (DATA/SHIFT Key) (Press at least 1 s.)	Press the DATA/ENTER Key once, or DATA/SHIFT Key for more than one second, and the display will be as shown on the left.
4	.-.CSr	JOG/SVON (SVON Key)	MODE/SET (MODE/SET Key)	Press the SVON or MODE/SET Key. The servo turns ON.
5	.-.CSr	∧ ∨	▲ ▼	When the parameter is set to Pn000.0 = 0 (default), pressing the UP Key will rotate the motor in the forward direction. Pressing the DOWN Key will rotate the motor in the reverse direction. When the parameter is set to Pn000.0 = 1, the rotation direction of the motor is reversed.
6	.-.CSr	Display blinks.		When the motor zero-point search is completed, the display blinks. At this moment, the motor is servo-locked at the zero-point pulse position.

Step	Display after Operation	Digital Operator	Panel Operator	Description
7	Fn003	DATA/ENTER (DATA/ENTER Key)	DATA◀ (DATA/SHIFT Key) (Press at least 1 s.)	Press the DATA/ENTER Key once, or DATA/SHIFT Key for more than one second. Fn003 display appears again. The motor will be servo OFF status.

INFO

Forward run prohibited (P-OT) and reverse run prohibited (N-OT) signals cannot be input during the zero-point search operation.

7.2.4 Parameter Settings Initialization (Fn005)

This function is used when returning to the factory settings after changing parameter settings.
Pressing the DSPL/SET or MODE/SET Key during servo ON does not initialize the parameter settings.
After initialization, turn OFF the power supply and then turn ON again.

IMPORTANT

Initialize the parameter settings with the servo OFF.

Step	Display after Operation	Digital Operator	Panel Operator	Description
1	Fn000	DSPL/SET (DSPL/SET Key)	MODE/SET (MODE/SET Key)	Press the DSPL/SET or MODE/SET Key to select the utility function mode.
2	Fn005	∧ ∨	▲ ▼	Press the UP or DOWN Key to select Fn005. Note: The enabled digit blinks.
3	P.InIt	DATA/ENTER (DATA/ENTER Key)	DATA◀ (DATA/SHIFT Key) (Press at least 1 s.)	Press the DATA/ENTER Key once, or DATA/SHIFT Key for more than one second, and the display will be as shown on the left.
4	P.InIt	DSPL/SET (DSPL/SET Key)	MODE/SET (MODE/SET Key)	Press the DSPL/SET or MODE/SET Key. Then, the parameters will be initialized. During initialization, the display shown on the left blinks.
5	donE	End of initialization		When the initialization of parameter setting completes, the display shown on the left blinks for about one second.
6	P.InIt	After about one second		The display changes from “donE” to the display shown on the left.
7	Fn005	DATA/ENTER (DATA/ENTER Key)	DATA◀ (DATA/SHIFT Key) (Press at least 1 s.)	Press the DATA/ENTER Key once, or DATA/SHIFT Key for more than one second to return to the utility function mode display Fn005.

7

7.2.5 Alarm Traceback Data Clear (Fn006)

This function clears the alarm traceback data, which stores the alarms generated in the SERVOPACK.

After having cleared data, “A.--” (No alarm) is set to all the alarm traceback data.

Step	Display after Operation	Digital Operator	Panel Operator	Description
1	Fn000	DSPL/SET (DSPL/SET Key)	MODE/SET (MODE/SET Key)	Press the DSPL/SET or MODE/SET Key to select the utility function mode.
2	Fn006	∧ ∨	▲ ▼	Press the UP or DOWN Key to select Fn006. Note: The enabled digit blinks.
3	trCLr	DATA/ENTER (DATA/ENTER Key)	DATA◀ (DATA/SHIFT Key) (Press at least 1 s.)	Press the DATA/ENTER Key once, or DATA/SHIFT Key for more than one second, and the display will be as shown on the left.
4	donE	DSPL/SET (DSPL/SET Key)	MODE/SET (MODE/SET Key)	Press the DSPL/SET or MODE/SET Key to clear the alarm traceback data. The display shown on the left blinks for about one second when the data is cleared.
5	trCLr	After about one second		The display changes from “donE” to the display shown on the left.
6	Fn006	DATA/ENTER (DATA/ENTER Key)	DATA◀ (DATA/SHIFT Key) (Press at least 1 s.)	Press the DATA/ENTER Key once, or DATA/SHIFT Key for more than one second to return to the utility function mode display Fn006.

7.2.6 Automatic Offset-adjustment of Motor Current Detection Signal (Fn00E)

Automatic motor current detection offset adjustment has performed at Yaskawa before shipping. Basically, the user need not perform this adjustment.

Perform this adjustment only if highly accurate adjustment is required for reducing torque ripple caused by current offset. Automatic adjustment is possible only with power supplied to the main circuit power supply and with the servo OFF.

IMPORTANT

Execute the automatic offset adjustment if the torque ripple is too big when compared with that of other SERVOPACKs.

Step	Display after Operation	Digital Operator	Panel Operator	Description
1	Fn000	DSPL/SET (DSPL/SET Key)	MODE/SET (MODE/SET Key)	Press the DSPL/SET or MODE/SET Key to select the utility function mode.
2	Fn00E	∧ ∨	▲ ▼	Press the UP or DOWN Key to select Fn00E. Note: The enabled digit blinks.
3	Cur_o	DATA/ENTER (DATA/ENTER Key)	DATA◀ (DATA/SHIFT Key) (Press at least 1 s.)	Press the DATA/ENTER Key once, or DATA/SHIFT Key for more than one second, and the display will be as shown on the left.
4	donE	DSPL/SET (DSPL/SET Key)	MODE/SET (MODE/SET Key)	Press the DSPL/SET or MODE/SET Key. The offset will be automatically adjusted. When the adjustment completes, the display shown on the left blinks for about one second.
5	Cur_o	After about one second		The display changes from “donE” to the display shown on the left.
6	Fn00E	DATA/ENTER (DATA/ENTER Key)	DATA◀ (DATA/SHIFT Key) (Press at least 1 s.)	Press the DATA/ENTER Key once, or DATA/SHIFT Key for more than one second to return to the utility function mode display Fn00E.

7.2.7 Manual Offset-adjustment of Motor Current Detection Signal (Fn00F)

The adjusting range of the motor current detection offset is -512 to +511.

To adjust the offset, perform the automatic adjustment (Fn00E) first.

And if the torque ripple is still big after the automatic adjustment, perform the manual adjustment.

IMPORTANT

If this function, particularly manual adjustment, is executed carelessly, it may worsen the characteristics.

When performing manual adjustments, run the motor at a speed of approximately 100 min^{-1}, and adjust the operator until the torque monitor ripple is minimized. (Refer to *9.5 Analog Monitor*.) Adjust the phase-U and phase-V offsets alternately several times until these offsets are well balanced.

Step	Display after Operation	Digital Operator	Panel Operator	Description
1	Fn000	DSPL/SET (DSPL/SET Key)	MODE/SET (MODE/SET Key)	Press the DSPL/SET or MODE/SET Key to select the utility function mode.
2	Fn00F	∧ ∨	▲ ▼	Press the UP or DOWN Key to select Fn00F. Note: The enabled digit blinks.
3	Cu1_o	DATA/ENTER (DATA/ENTER Key)	DATA◀ (DATA/SHIFT Key) (Press at least 1 s.)	Press the DATA/ENTER Key once, or DATA/SHIFT Key for more than one second, and the display will be as shown on the left (phase U).
4	0000	< >	DATA◀ (DATA/SHIFT Key) (Press at least 1 s.)	Press the LEFT or RIGHT or DATA/SHIFT Key for less than one second to display the phase-U offset amount.
5	-0010	∧ ∨	▲ ▼	Press the UP or DOWN Key to adjust the offset. Carefully adjust the offset while monitoring the torque reference monitor signal.
6	Cu1_o	< >	DATA◀ (DATA/SHIFT Key) (Press at least 1 s.)	Press the LEFT or RIGHT or DATA/SHIFT Key for less than one second. The display shown on the left appears.
7	Cu2_o	DSPL/SET (DSPL/SET Key)	MODE/SET (MODE/SET Key)	Press the DSPL/SET or MODE/SET Key. The display shown on the left appears (phase V).
8	0000	< >	DATA◀ (DATA/SHIFT Key) (Press at least 1 s.)	Press the LEFT or RIGHT or DATA/SHIFT Key for less than one second to display the phase-V offset amount.
9	-0010	∧ ∨	▲ ▼	Press the UP or DOWN Key to adjust the offset. Carefully adjust the offset while monitoring the torque reference monitor signal.
10	Cu2_o	< >	DATA◀ (DATA/SHIFT Key) (Press at least 1 s.)	Press the LEFT or RIGHT Key or DATA/SHIFT Key for less than one second. The display shown on the left appears.
11	Fn00F	DATA/ENTER (DATA/ENTER Key)	DATA◀ (DATA/SHIFT Key) (Press at least 1 s.)	When the offset adjustment completes, press the DATA/ENTER Key once, or DATA/SHIFT Key for more than one second. The display returns to the utility function mode display Fn00F.

7.2.8 Password Setting (Protects Parameters from Being Changed) (Fn010)

The write prohibited setting is used for preventing accidental changes of the parameter. All the parameters Pn□□□ and some of Fn□□□ become write prohibited by setting values. Refer to *7.2.1 List of Utility Function Modes* for details.

Setting values are as follows:

- "0000": Write permitted (Releases write prohibited mode.)
- "0001": Write prohibited (Parameters become write prohibited from the next power ON.)

Step	Display after Operation	Digital Operator	Panel Operator	Description
1	Fn000	DSPL/SET (DSPL/SET Key)	MODE/SET (MODE/SET Key)	Press the DSPL/SET or MODE/SET Key to select the utility function mode.
2	Fn010	∧ ∨	▲ ▼	Press the UP or DOWN Key to select Fn010. Note: The enabled digit blinks.
3	P.0000	DATA/ENTER (DATA/ENTER Key)	DATA◀ (DATA/SHIFT Key) (Press at least 1 s.)	Press the DATA/ENTER Key once, or DATA/SHIFT Key for more than one second, and the display will be as shown on the left.
4	P.0001	∧ ∨	▲ ▼	Press the UP or DOWN Key to set a value: "0000": Write permitted, "0001": Write prohibited
5	donE	DSPL/SET (DSPL/SET Key)	MODE/SET (MODE/SET Key)	Press the DSPL/SET or MODE/SET Key to register the value. When the value is registered, the display shown on the left blinks for about one second. Note: If a value other than "0000" and "0001" is set, "Error" blinks for about one second, and the previous setting is displayed.
6	P.0001	After about one second		The display changes from "donE" to "P.000□."
7	Fn010	DATA/ENTER (DATA/ENTER Key)	DATA◀ (DATA/SHIFT Key) (Press at least 1 s.)	Press the DATA/ENTER Key once, or DATA/SHIFT Key for more than one second to return to the utility function mode display Fn010.

7.2.9 Motor Models Display (Fn011)

This mode is used for motor maintenance, set the parameter Fn011 to select the motor model check mode. If the SERVOPACK has been custom-made, you can also check the specification codes of SERVOPACKs.

Step	Display after Operation	Digital Operator	Panel Operator	Description
1	Fn000	DSPL/SET (DSPL/SET Key)	MODE/SET (MODE/SET Key)	Press the DSPL/SET or MODE/SET Key to select the utility function mode.
2	Fn011	∧ ∨	▲ ▼	Press the UP or DOWN Key to select Fn011. Note: The enabled digit blinks.
3	F.0100	DATA/ENTER (DATA/ENTER Key)	DATA◀ (DATA/SHIFT Key) (Press at least 1 s.)	Press the DATA/ENTER Key once, or DATA/SHIFT Key for more than one second to display the servomotor model and voltage code. F.0100 Motor Voltage: Data 00 = 100VAC, 140VDC; Data 01 = 200VAC, 280VDC; Data 02 = 400VAC, 560VDC Motor Type: Data 00 = SGMAH; Data 01 = SGMPH; Data 02 = SGMSH; Data 03 = SGMGH-□A(1500 min^{-1}); Data 04 = SGMGH-□B(1000 min^{-1}); Data 05 = SGMDH; Data 06 = SGMUH
4	P.0010	DSPL/SET (DSPL/SET Key)	MODE/SET (MODE/SET Key)	Press the DSPL/SET or MODE/SET Key to display the servomotor capacity. P.0010 Motor capacity in units of 10 W The above example indicates 100 W.
5	E.0017	DSPL/SET (DSPL/SET Key)	MODE/SET (MODE/SET Key)	Press the DSPL/SET or MODE/SET Key, and the encoder type and resolution code will be displayed. E.0013 Encoder Type: Data 00 = Incremental; Data 01 = Absolute Encoder Resolution: Data 13 = 13-bit; Data 16 = 16-bit; Data 17 = 17-bit; Data 20 = Reserved
6	y.0010	DSPL/SET (DSPL/SET Key)	MODE/SET (MODE/SET Key)	Press the DSPL/SET or MODE/SET Key to display the SERVOPACK's code for custom orders. Note: The display "y.0000" means standard model. y.0010 Code for custom orders
7	Fn011	DATA/ENTER (DATA/ENTER Key)	DATA◀ (DATA/SHIFT Key) (Press at least 1 s.)	Press the DATA/ENTER Key once, or DATA/SHIFT Key for more than one second to return to the utility function mode display Fn011.

7.2.10 Software Version Display (Fn012)

Set the Fn012 to select the software-version check mode to check the SERVOPACK and encoder software version numbers.

Step	Display after Operation	Digital Operator	Panel Operator	Description
1	Fn000	DSPL/SET (DSPL/SET Key)	MODE/SET (MODE/SET Key)	Press the DSPL/SET or MODE/SET Key to select the utility function mode.
2	Fn012	∧ ∨	▲ ▼	Press the UP or DOWN Key to select Fn012. Note: The enabled digit blinks.
3	r.0001	DATA/ENTER (DATA/ENTER Key)	DATA◀ (DATA/SHIFT Key) (Press at least 1 s.)	Press the DATA/ENTER Key once, or DATA/SHIFT Key for more than one second to display the SERVOPACK software version number.
4	E.0001	DSPL/SET (DSPL/SET Key)	MODE/SET (MODE/SET Key)	Press the DSPL/SET or MODE/SET Key to display the encoder software version number.
5	Fn012	DATA/ENTER (DATA/ENTER Key)	DATA◀ (DATA/SHIFT Key) (Press at least 1 s.)	Press the DATA/ENTER Key once, or DATA/SHIFT Key for more than one second to return to the utility function mode Fn012.

7.2.11 Application Module Detection Results Clear (Fn014)

The alarm A.E7 (application module detection error) occurs when turning ON the power for the first time when the SERVOPACK is used without application module after the SERVOPACK has been used with application module.

Clearing application module detection results is performed as using the SERVOPACK individually without operating the application module detection.

Restarting again after performing the following operation will clear and reset the alarm A.E7. Then, the operation of SERVOPACK without application module is enabled.

IMPORTANT

Because the parameter is set for the SERVOPACK with an application module, change the setting or initialize the parameter value (Fn005 of utility function mode) as required.

Step	Display after Operation	Digital Operator	Panel Operator	Description
1	Fn000	DSPL/SET (DSPL/SET Key)	MODE/SET (MODE/SET Key)	Press the DSPL/SET or MODE/SET Key to select the utility function mode.
2	Fn014	∧ ∨	▲ ▼	Press the UP or DOWN Key to select the Fn014. Note: The enabled digit blinks.
3	o.Init	DATA/ENTER (DATA/ENTER Key)	DATA◀ (DATA/SHIFT Key) (Press at least 1 s.)	Press the DATA/ENTER Key once, or DATA/SHIFT Key for more than one second, and the display will be as shown on the left.
4	o.Init Blinks ↓ donE	DSPL/SET (DSPL/SET Key)	MODE/SET (MODE/SET Key)	Press the DSPL/SET or MODE/SET Key, and the display will be as shown on the left to clear the application module detection.
5	o.Init	After about one second		The display changes from “donE” to the display shown on the left.
6	Fn014	DATA/ENTER (DATA/ENTER Key)	DATA◀ (DATA/SHIFT Key) (Press at least 1 s.)	Press the DATA/ENTER Key once, or DATA/SHIFT Key for more than one second to return to the utility function mode.

7.3 Operation in Parameter Setting Mode (Pn□□□)

Functions can be selected or adjusted by setting parameters. There are two types of parameters. One type requires value setting and the other requires function selection. These two types use different setting methods.

With value setting, a parameter is set to a value within the specified range of the parameter. With function selection, the functions allocated to each digit of the seven-segment LED panel indicator (five digits) can be selected.

7.3.1 Setting Parameters

(1) Value Setting Parameters

(a) Types of Value Setting Parameters

Refer to *11.3.2 List of Parameters*.

(b) Example of Changing Value Setting Parameter

The parameter settings can be used for changing parameter data. Before changing the data, check the permitted range of the parameter.

◀ EXAMPLE ▶ The example below shows how to change parameter Pn100 (speed loop gain) from “40” to “100.”

Step	Display after Operation	Digital Operator	Panel Operator	Description
1	Pn 100	DSPL/SET (DSPL/SET Key)	MODE/SET (MODE/SET Key)	Press the DSPL/SET or MODE/SET Key to select the parameter setting mode. If a parameter other than Pn100 is displayed, press the UP or DOWN Key to select Pn100. Note: The enabled digit blinks.
2	00040	DATA/ENTER (DATA/ENTER Key)	DATA◀ (DATA/SHIFT Key) (Press at least 1 s.)	Press the DATA/ENTER Key once, or DATA/SHIFT Key for more than one second. The current data of Pn100 is displayed.
3	00040	◀ ▶	DATA/◀ (DATA/SHIFT Key)	Press the LEFT or RIGHT Key or DATA/SHIFT Key to select the digit to be set.
4	00100	▲ ▼	▲ ▼	Press the UP or DOWN Key to change the data. Keep pressing UP or DOWN Key until “00100” is displayed.
5	00100	DATA/ENTER (DATA/ENTER Key)	DATA◀ (DATA/SHIFT Key) (Press at least 1 s.)	Press the DATA/ENTER Key once, or DATA/SHIFT Key for more than one second. The value blinks and is saved.
6	Pn 100	DATA/ENTER (DATA/ENTER Key)	DATA◀ (DATA/SHIFT Key) (Press at least 1 s.)	Press the DATA/ENTER Key once, or DATA/SHIFT Key for more than one second to return to the display of Pn100. The data for the speed loop gain (Pn100) is changed from “40” to “100.”

7

(c) Parameter Indications

In this manual, the parameter is explained with using the following format.

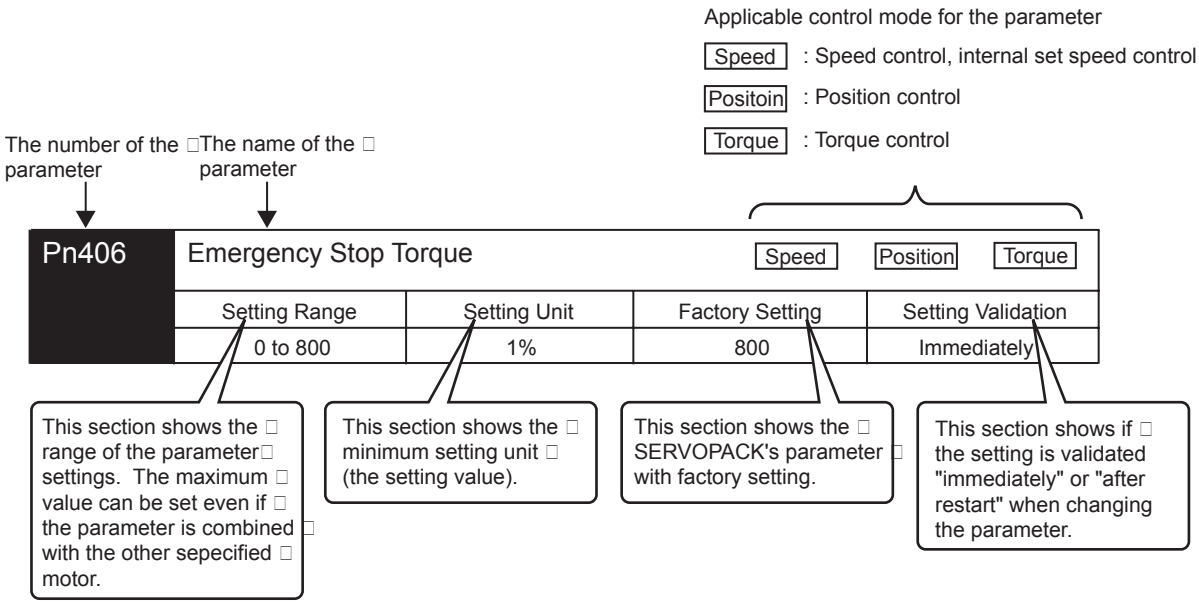

The following alarm shows the setting value of the parameter.

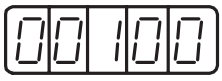

Decimal display in five digits

(2) Function Selection Parameters

(a) Types of Function Selection Parameters

Refer to *11.3.2 List of Parameters.*

IMPORTANT

If the parameters with "After restart" in "Setting Validation" column in the table are changed, turn OFF the main circuit and control power supply and ON again to validate new setting.

- Pn10B.1 and Pn110.0 require the power to be reset as mentioned above.
- Pn10B.0, Pn110.1, and Pn110.2 are enabled with the off-line, so the power does not have to be reset.

Category	Parameter No.	Name	Factory Setting	Setting Validation
Function Selection Parameter	Pn000	Function Selection Basic Switches	0000	After restart
	Pn001	Function Selection Application Switches	0000	After restart
	Pn002	Function Selection Application Switches	0000	After restart
	Pn003	Function Selection Application Switches	0002	Immediately
Servo Gain Related Parameter	Pn10B	Gain Application Switches	0000	After restart/ Immediately
	Pn110	Online Autotuning Switches	0010	After restart/ Immediately
Position Control Related Parameter	Pn200	Position Control References Selection Switches	0000	After restart
	Pn207	Position Control Function Switches	0000	After restart
Torque Control Related Parameter	Pn408	Torque Function Switches	0000	Immediately
Sequence Related Parameter (Input Signal Selection)	Pn50A	Input Signal Selections	2100	After restart
	Pn50B	Input Signal Selections	6543	After restart
	Pn50C	Input Signal Selections	8888	After restart
	Pn50D	Input Signal Selections	8888	After restart
Sequence Related Parameter (Output Signal Selection)	Pn50E	Output Signal Selections	3211	After restart
	Pn50F	Output Signal Selections	0000	After restart
	Pn510	Output Signal Selections	0000	After restart
	Pn512	Output Signal Reversal Setting	0000	After restart

(b) Example of Changing Function Selection

The procedure to change the setting of control method selection (Pn000.1) of the function selection basic switches (Pn000) from speed control to position control is shown below.

Step	Display after Operation	Digital Operator	Panel Operator	Description
1	Pn000	DSPL/SET (DSPL/SET Key)	MODE/SET (MODE/SET Key)	Press the DSPL/SET or MODE/SET Key to select the parameter setting mode. If a parameter other than Pn000 is displayed, press the UP or DOWN Key to select the Pn100. Note: The enable digit blinks.
2	n.0000	DATA/ENTER (DATA/ENTER Key)	DATA◀ (DATA/SHIFT Key) (Press at least 1 s.)	Press the DATA/ENTER Key once, or DATA/SHIFT Key for more than one second. The current data of Pn000 is displayed.
3	n.0000	< >	DATA/◀ (DATA/SHIFT Key)	Press the LEFT or RIGHT or DATA/SHIFT Key to select the first digit of current data.
4	n.0010	∧ (UP Key)	▲	Press the UP Key once to change to “n.0010.” (Set the control method to position control.)
5	n.0010	DATA/ENTER (DATA/ENTER Key)	DATA◀ (DATA/SHIFT Key) (Press at least 1 s.)	Press the DATA/ENTER Key once, or DATA/SHIFT Key for more than one second. The value blinks and is saved.
6	Pn000	DATA/ENTER (DATA/ENTER Key)	DATA◀ (DATA/SHIFT Key) (Press at least 1 s.)	Press the DATA/ENTER Key once, or DATA/SHIFT Key for more than one second to return to the display Pn000. The control method is changed to position control.
7	To enable the change in the setting of function selection basic switches (Pn000), turn OFF the power and ON again.			

(c) Parameter Indications

Each digit of the function selection parameters is defined as the hexadecimal display. The parameter display example shows how parameters are displayed in digits for set values.

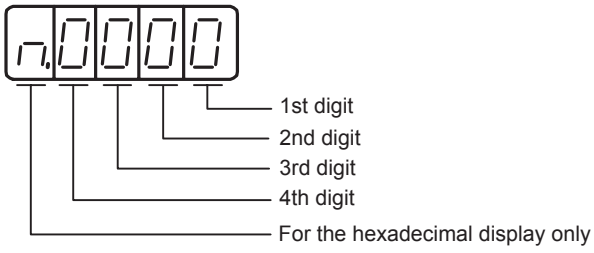

- Pn000.0 or n.xxx□: Indicates the value for the 1st digit of parameter Pn000.
- Pn000.1 or n.xx□x: Indicates the value for the 2nd digit of parameter Pn000.
- Pn000.2 or n.x□xx: Indicates the value for the 3rd digit of parameter Pn000.
- Pn000.3 or n.□xxx: Indicates the value for the 4th digit of parameter Pn000.

For details on each digit of the parameter, see *11.3.2 List of Parameters.*

Parameter		Meaning
Pn50A	n.**2**□□□	Input the forward run prohibited signal (P-OT) from CN1-42 (Factory setting).
	n.**8**□□□	Forward run prohibited signal (P-OT) is disabled (Forward rotation allowed).

The number of the parameter

This blank shows the setting value of the function selection, as well as the state condition on the panel operator and the digital operator (JUSP-OP02A-2).

This section explains the details of the function selection.

7.3.2 Input Circuit Signal Allocation

Each input signal is allocated to a pin of the input connector CN1 by setting the parameter.

The following table shows detailed allocation.

(1) Factory Setting (Pn50A.0 = 0)

The factory setting for the input signal allocation is as follows.

□ means factory setting.

Pn50A: n.2100

Pn50B: n.6543

(2) Changing the Allocation (Pn50A.0 = 1)

Set the parameter in accordance with the relation between the signal to be used and the input connector pin. After having changed the parameter, turn OFF the power and ON again to enable the parameters.

☐ means factory setting.

Signal Name	Validity Level	Input Signal	CN1 Input Pin Allocation							Connection Not Required (SERVOPACK judges the connection)	
Parameter Setting Allocation			40	41	42	43	44	45	46	Always ON	Always OFF
Servo ON Pn50A.1 = n.xx☐x	L	/S-ON	0	1	2	3	4	5	6	7	8
	H	S-ON	9	A	B	C	D	E	F		
Proportional Operation Reference Pn50A.2 = n.x☐xx	L	/P-CON	0	1	2	3	4	5	6	7	8
	H	P-CON	9	A	B	C	D	E	F		
Forward Run Prohibited Pn50A.3 = n.☐xxx	H	P-OT	0	1	2	3	4	5	6	7	8
	L	/P-OT	9	A	B	C	D	E	F		
Reverse Run Prohibited Pn50B.0 = n.xxx☐	H	N-OT	0	1	2	3	4	5	6	7	8
	L	/N-OT	9	A	B	C	D	E	F		
Alarm Reset Pn50B.1 = n.xx☐x	L	/ARM-RST	0	1	2	3	4	5	6	–	8
	H	ARM-RST	9	A	B	C	D	E	F		
Forward External Torque Limit Pn50B.2 = n.x☐xx	L	/P-CL	0	1	2	3	4	5	6	7	8
	H	P-CL	9	A	B	C	D	E	F		
Reserve External Torque Limit Pn50B.3 = n.☐xxx	L	/N-CL	0	1	2	3	4	5	6	7	8
	H	N-CL	9	A	B	C	D	E	F		
Internal Set Speed Selection Pn50C.0 = n.xxx☐	L	/SPD-D	0	1	2	3	4	5	6	7	8
	H	SPD-D	9	A	B	C	D	E	F		
Internal Set Speed Selection Pn50C.1 = n.xx☐x	L	/SPD-A	0	1	2	3	4	5	6	7	8
	H	SPD-A	9	A	B	C	D	E	F		
Internal Set Speed Selection Pn50C.2 = n.x☐xx	L	/SPD-B	0	1	2	3	4	5	6	7	8
	H	SPD-B	9	A	B	C	D	E	F		
Control Method Selection Pn50C.3 = n.☐xxx	L	/C-SEL	0	1	2	3	4	5	6	7	8
	H	C-SEL	9	A	B	C	D	E	F		
Zero Clamp Pn50D.0 = n.xxx☐	L	/ZCLAMP	0	1	2	3	4	5	6	7	8
	H	ZCLAMP	9	A	B	C	D	E	F		
Reference Pulse Inhibit Pn50D.1 = n.xx☐x	L	/INHIBIT	0	1	2	3	4	5	6	7	8
	H	INHIBIT	9	A	B	C	D	E	F		
Gain Changeover Pn50D.2 = n.x☐xx	L	/G-SEL	0	1	2	3	4	5	6	7	8
	H	G-SEL	9	A	B	C	D	E	F		

IMPORTANT

1. When using Servo ON, Forward Run Prohibited, and Reverse Run Prohibited signals with the setting "Polarity Reversal," the machine may not move to the specified safe direction at occurrence of failure such as signal line disconnection. If such setting is absolutely necessary, confirm the operation and observe safety precautions.
2. When two or more signals are allocated to the same input circuit, the input signal level will be applied to all the allocated signal.

(3) Allocating Input Signals

◀ EXAMPLE ▶ The procedure to replace Servo ON (/S-ON) signal allocated to CN1-40 and Forward External Torque Limit (/P-CL) allocated to CN1-45 is shown below.

	Before		After
Pn50A:	n.2100	→	n.2151
Pn50B:	n.6543	→	n.6043

Step	Display after Operation	Digital Operator	Panel Operator	Description
1	Pn50A	DSPL/SET (DSPL/SET Key)	MODE/SET (MODE/SET Key)	Press the DSPL/SET or MODE/SET Key to select the "value setting parameter" mode. If a parameter other than Pn50A is displayed, press the UP or DOWN Key to set Pn50A. Note: The enabled digit blinks.
2	n.2100	DATA/ENTER (DATA/ENTER Key)	DATA◀ (DATA/SHIFT Key) (Press at least 1 s.)	Press the DATA/ENTER Key once, or DATA/SHIFT Key for more than one second to display the current data of Pn50A. (/S-ON is allocated to CN1-40.)
3	n.2101	∧ (UP Key)	DATA/◀ (DATA/SHIFT Key)	Press the UP Key to set to "1." (Sequence input signals can be freely set.)
4	n.2151	< >	DATA/◀ (DATA/SHIFT Key)	Press the LEFT or RIGHT Key or DATA/SHIFT Key to select the second digit from the right. Press the UP key to set to "5." (Changes the allocation of /S-ON from CN1-40 to CN1-45.)
5	n.2151	DATA/ENTER (DATA/ENTER Key)	DATA◀ (DATA/SHIFT Key) (Press at least 1 s.)	Press the DATA/ENTER Key once, or DATA/SHIFT Key for more than one second. The value blinks and is saved. At the moment, the CN1-45 operates with OR logic for /S-ON and /P-CL.
6	Pn50A	DATA/ENTER (DATA/ENTER Key)	DATA◀ (DATA/SHIFT Key) (Press at least 1 s.)	Press the DATA/ENTER Key once, or DATA/SHIFT Key for more than one second to return to the display Pn50A.
7	Pn50b	∧ (UP Key)	▲ (UP Key)	Press the UP Key to set Pn50B. Note: The enabled digit blinks.
8	n.6543	DATA/ENTER (DATA/ENTER Key)	DATA◀ (DATA/SHIFT Key) (Press at least 1 s.)	Press the DATA/ENTER Key once, or DATA/SHIFT Key for more than one second to display the current data of Pn50B. (/P-CL is allocated to CN1-45.)
9	n.6043	< >	DATA/◀ (DATA/SHIFT Key)	Press the LEFT or RIGHT Key or DATA/SHIFT Key to select the third digit from the right. Press the DOWN Key to set to "0." (Changes the allocation of /P-CL from CN1-45 to CN1-40.)
10	n.6043	DATA/ENTER (DATA/ENTER Key)	DATA◀ (DATA/SHIFT Key) (Press at least 1 s.)	Press the DATA/ENTER Key once, or DATA/SHIFT Key for more than one second. The value blinks and is saved.
11	Pn50b	DATA/ENTER (DATA/ENTER Key)	DATA/◀ (DATA/SHIFT Key)	Press the DATA/ENTER Key once, or DATA/SHIFT Key for more than one second to return to the display Pn50B. /S-ON is allocation to CN1-45, and /P-CL is allocated to CN1-40.
12	Turn the power OFF and ON again to enable the change of input signal selections (Pn50A and Pn50B).			

7.3.3 Output Circuit Signal Allocation

Functions can be allocated to the following sequence output signals. After having changed the parameter, turn OFF the power and ON again to enable the parameters.

$\boxed{}$ means factory setting.

CN1 Pin No.		25/(26)		27/(28)		29/(30)		Remark
Parameter Setting Allocation		Pn512=n.xxx□		Pn512=n.xx□x		Pn512=n.x□xx		
		0	1	0	1	0	1	
Positioning Completion (/COIN) Pn50E.0 = n.xxx□	0	Invalid						L: Valid output signal: Low level H: Valid output signal: High level Invalid: Do not use the output signal. ■ Factory Setting Pn50E: n.3211 Pn50F: n.0000 Pn510: n.0000 Pn512: n.0000 Note: The output signals for Positioning Completion Signal and Speed Coincidence Detection Signal differ depending on the control method.
	1	L	H					
	2			L	H			
	3					L	H	
Speed Coincidence Detection (/V-CMP) Pn50E.1 = n.xx□x	0	Invalid						
	1	L	H					
	2			L	H			
	3					L	H	
Rotation Detection (/TGON) Pn50E.2 = n.x□xx	0	Invalid						
	1	L	H					
	2			L	H			
	3					L	H	
Servo Ready (/S-RDY) Pn50E.3 = n.□xxx	0	Invalid						
	1	L	H					
	2			L	H			
	3					L	H	
Torque Limit Detection (/CLT) Pn50F.0 = n.xxx□	0	Invalid						
	1	L	H					
	2			L	H			
	3					L	H	
Speed Limit Detection (/VLT) Pn50F.1 = n.xx□x	0	Invalid						
	1	L	H					
	2			L	H			
	3					L	H	
Brake (/BK) Pn50F.2 = n.x□xx	0	Invalid						
	1	L	H					
	2			L	H			
	3					L	H	
Warning (/WARN) Pn50F.3 = n.□xxx	0	Invalid						
	1	L	H					
	2			L	H			
	3					L	H	
Near (/NEAR) Pn510.0 = n.xxx□	0	Invalid						
	1	L	H					
	2			L	H			
	3					L	H	

IMPORTANT

1. When two or more signals are allocated to the same output circuit, a signal is output with OR logic.
2. The signals not detected are considered as “Invalid.” For example, Positioning Completion (/COIN) Signal in speed control mode is “Invalid.”

- Allocating Output Signals

◀ EXAMPLE ▶ The procedure to replace Rotation Detection (/TGON) signal allocated to CN1-27 (28) with factory setting to “Invalid” and allocate Brake Interlock (/BK) signal to CN1-27 (28) is shown below.

Pn50E: Before n.3211 → After n.3011

Step	Display after Operation	Digital Operator	Panel Operator	Description
1	Pn50E	DSPL/SET (DSPL/SET Key)	MODE/SET (MODE/SET Key)	Press the DSPL/SET or MODE/SET Key to select the “value setting parameter” mode. If a parameter other than Pn50E is displayed, press the UP or DOWN Key to select Pn50E. Note: The enabled digit blinks.
2	n.3211	DATA/ENTER (DATA/ENTER Key)	DATA/◀ (DATA/SHIFT Key)	Press the DATA/ENTER Key once, or DATA/SHIFT Key for more than one second to display the current data of Pn50E. (/TGON is allocated to CN1-27 (28).)
3	n.3011	◀ ▶	DATA/◀ (DATA/SHIFT Key)	Press the LEFT Key or RIGHT or DATA/SHIFT Key to select the third digit from the right. Press the DOWN Key to set “0.” (Sets /TGON “Invalid.”)
4	n.3011	DATA/ENTER (DATA/ENTER Key)	DATA◀ (DATA/SHIFT Key) (Press at least 1 s.)	Press the DATA/ENTER Key once, or DATA/SHIFT Key for more than one second. The value blinks and is saved.
5	Pn50E	DATA/ENTER (DATA/ENTER Key)	DATA◀ (DATA/SHIFT Key) (Press at least 1 s.)	Press the DATA/ENTER Key once, or DATA/SHIFT Key for more than one second to return to the display Pn50E.
6	Pn50F	▲ (UP Key)	▲ (UP Key)	Press the UP Key to set Pn50F. Note: The enabled digit blinks.
7	n.0000	DATA/ENTER (DATA/ENTER Key)	DATA◀ (DATA/SHIFT Key) (Press at least 1 s.)	Press the DATA/ENTER Key once, or DATA/SHIFT Key for more than one second to display the current data of Pn50F. (/BK is set to “Invalid.”)
8	n.0200	◀ ▶	DATA/◀ (DATA/SHIFT Key)	Press the LEFT or RIHGT Key or DATA/SHIFT Key to select the third digit from the right. Press the UP Key to set “2.” (Allocates /BK to CN1-27 (28).)
9	n.0200	DATA/ENTER (DATA/ENTER Key)	DATA◀ (DATA/SHIFT Key) (Press at least 1 s.)	Press the DATA/ENTER Key once, or DATA/SHIFT Key for more than one second. The value blinks and is saved.
10	Pn50F	DATA/ENTER (DATA/ENTER Key)	DATA◀ (DATA/SHIFT Key) (Press at least 1 s.)	Press the DATA/ENTER Key once, or DATA/SHIFT Key for more than one second to return to the display Pn50F. /TGON is set as “Invalid” and /BK is allocated to CN1-27 (28).
11	Turn OFF the power and ON again to enable the changes of output signal selection (Pn50E and Pn50F).			

7.4 Operation in Monitor Mode (Un□□□)

The monitor mode can be used for monitoring the reference values, I/O signal status, and SERVOPACK internal status.
The monitor mode can be selected during motor operation.

7.4.1 List of Monitor Modes

(1) Contents of Monitor Mode Display

Parameter No.	Content of Display	Unit
Un000	Actual motor speed	min^{-1}
Un001	Input speed reference (Valid only in speed control mode)	min^{-1}
Un002	Internal torque reference (in percentage to the rated torque)	%
Un003	Rotation angle 1 (32-bit decimal code)	Number of pulses from the zero-point
Un004	Rotation angle 2 (Angle from the zero-point (electrical angle))	deg
Un005	Input signal monitor *1	–
Un006	Output signal monitor *1	–
Un007	Input reference pulse speed (valid only in position control mode)	min^{-1}
Un008	Error counter value (amount of position error) (valid only in position control mode)	reference unit
Un009	Accumulated load rate (value for the rated torque as 100 %. Displays effective torque in 10-s cycle.)	%
Un00A	Regenerative load rate (value for the processable regenerative power as 100 %. Displays regenerative power consumption in 10-s cycle.)	%
Un00B	Power consumed by DB resistance (Value for the processable power when dynamic brake is applied as 100 %. Displays power consumed by DB resistance in 10-s cycle.)	%
Un00C	Input reference pulse counter (32-bit hexadecimal code) (valid only in position control mode) *2	–
Un00D	Feedback pulse counter (Data as four times of the encoder pulse number: 32-bit hexadecimal code) *2	–

* 1. Refer to *(2) Sequence I/O Signal Monitor Display*.
* 2. Refer to *(4) Monitor Display of Reference Pulse Counter and Feedback Pulse Counter*.

(2) Sequence I/O Signal Monitor Display

The following section describes the monitor display for sequence I/O signals.

(a) Input Signal Monitor Display

The status of input signal allocated to each input terminal is displayed:
When the input is in OFF (open) status, the top segment (LED) is lit.
when the input is in ON (short-circuited) status, the bottom segment (LED) is lit.

Refer to *7.3.2 Input Circuit Signal Allocation* for the relation between input terminals and signals.

Display LED Number	Input Terminal Name	Factory Setting
1	CN1-40	/S-ON
2	CN1-41	/P-CON
3	CN1-42	P-OT
4	CN1-43	N-OT
5	CN1-44	/ALM-RST
6	CN1-45	/P-CL
7	CN1-46	/N-CL
8	CN1-4	SEN

◀ EXAMPLE ▶

- When /S-ON signal is ON (Servo ON at L level)

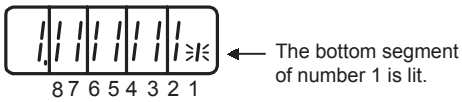

- When /S-ON signal is OFF

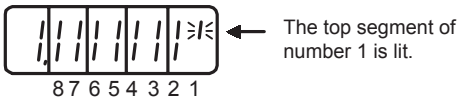

- When P-OT signal operates (Operates at H level)

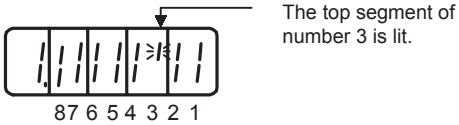

7

(b) Output Signal Monitor Display

The status of output signal allocated to each output terminal is displayed:
When the output is in OFF (open) status, the top segment (LED) is lit.
When the output is in ON (short-circuited) status, the bottom segment is lit.

Refer to *7.3.3 Output Circuit Signal Allocation* for the relation between output terminals and signals.

Display LED Number	Output Terminal Name	Factory Setting
1	CN1-31, -32	ALM
2	CN1-25, -26	/COIN or /V-CMP
3	CN1-27, -28	/TGON
4	CN1-29, -30	/S-RDY
5	CN1-37	AL01
6	CN1-38	AL02
7	CN1-39	AL03

Seven segments in the top and bottom rows of an LED turn ON and OFF in different combinations to indicate various output signals.

These segments ON for L level and OFF for H level.

◀ EXAMPLE ▶

- When ALM signal operates (alarm at H level.)

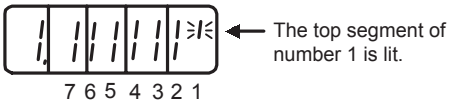

(3) Operation in Monitor Mode

The example below shows how to display the contents of monitor number Un000 when the servomotor rotates at 1500 min^{-1}.

Step	Display after Operation	Digital Operator	Panel Operator	Description
1	Un000	DSPL/SET (DSPL/SET Key)	MODE/SET (MODE/SET Key)	Press the DSPL/SET or MODE/SET Key to select the monitor mode.
2	Un000	∧ ∨	▲ ▼	Press the UP or DOWN Key to select the monitor number to be displayed. The display shows the example of the data of Un000.
3	1500	DATA/ENTER (DATA/ENTER Key)	DATA◀ (DATA/SHIFT Key) (Press at least 1 s.)	Press the DATA/ENTER Key once, or DATA/SHIFT Key for more than one second to display the data of Un000.
4	Un000	DATA/ENTER (DATA/ENTER Key)	DATA◀ (DATA/SHIFT Key) (Press at least 1 s.)	Press the DATA/ENTER Key once, or DATA/SHIFT Key for more than one second to return to the display of monitor number.

(4) Monitor Display of Reference Pulse Counter and Feedback Pulse Counter

The monitor display of reference pulse counter and feedback pulse counter is expressed in 32-bit hexadecimal.

Step	Display after Operation	Digital Operator	Panel Operator	Description
1	Un000	DSPL/SET (DSPL/SET Key)	MODE/SET (MODE/SET Key)	Press the DSPL/SET or MODE/SET Key to select the monitor mode.
2	Un00d	∧ ∨	▲ ▼	Press the UP or DOWN Key to select “Un00C” or “Un00D.”
3	H.1111 The upper 16-bit data	DATA/ENTER (DATA/ENTER Key)	DATA◀ (DATA/SHIFT Key) (Press at least 1 s.)	Press the DATA/ENTER Key once, or DATA/SHIFT Key for more than one second to display the data of the selected monitor number.
4	L.1111 The lower 16-bit data	∧ ∨	▲ ▼	Press the UP or DOWN Key to display the lower 16-bit data.
5	L.0000	∧ ∨ (Press simultaneouly)	▲ + ▼ Press simultaneously	Press both UP and DOWN Keys simultaneously while the display on the left appears to clear the 32-bit counter data. (The display shown on the left is of the lower 16-bit data.)
6	Un00d	DATA/ENTER (DATA/ENTER Key)	DATA◀ (DATA/SHIFT Key) (Press at least 1 s.)	Press the DATA/ENTER Key once, or DATA/SHIFT Key for more than one second to return to the display of monitor number.

When the control power supply is turned ON, reference pulse and feedback pulse will be “0.” The counter value increases by forward references, and decreases by reverse references.

Displays the pulse number from 0 to 4294967295 in sequence. If one pulse is decreased from 0, the digital operator and the panel operator display 4294967295 and then decrease from this pulse number. Also, if one pulse in increased from 4294967295, the digital operator and the panel operator display 0 and increase from this pulse number.

The feedback pulse will be 65536 pulse/rev, when using the 16-bit encoder. The feedback pulse will be 131071 pulse/rev, when using the 17-bit encoder.

8

Operation

8.1 Trial Operation - 8-4
8.1.1 Trial Operation for Servomotor without Load - - - - - - - - - - - - - - - - - - - 8-6
8.1.2 Trial Operation for Servomotor without Load from Host Reference - - - 8-9
8.1.3 Trial Operation with the Servomotor Connected to the Machine - - - - 8-15
8.1.4 Servomotor with Brakes - 8-16
8.1.5 Position Control by Host Controller - 8-16

8.2 Control Mode Selection - 8-17

8.3 Setting Common Basic Functions - 8-18
8.3.1 Setting the Servo ON Signal - 8-18
8.3.2 Switching the Servomotor Rotation Direction - - - - - - - - - - - - - - - - - - 8-19
8.3.3 Setting the Overtravel Limit Function - 8-20
8.3.4 Setting for Holding Brakes - 8-22
8.3.5 Selecting the Stopping Method After Servo OFF - - - - - - - - - - - - - - - 8-25
8.3.6 Instantaneous Power Loss Settings - 8-26

8.4 Absolute Encoders - 8-27
8.4.1 Interface Circuits - 8-28
8.4.2 Selecting an Absolute Encoder - 8-29
8.4.3 Handling Batteries - 8-29
8.4.4 Replacing Batteries - 8-30
8.4.5 Absolute Encoder Setup (Fn008) - 8-30
8.4.6 Absolute Encoder Reception Sequence - 8-32
8.4.7 Multiturn Limit Setting - 8-36
8.4.8 Multiturn Limit Setting when Multiturn Limit Disagreement (A.CC) Occurred - 8-37

8.5 Operating Using Speed Control with Analog Reference - - - 8-38
8.5.1 Setting Parameters - 8-38
8.5.2 Setting Input Signals - 8-39
8.5.3 Adjusting Offset - 8-40
8.5.4 Soft Start - 8-43
8.5.5 Speed Reference Filter - 8-43
8.5.6 Using the Zero Clamp Function - 8-43
8.5.7 Encoder Signal Output - 8-45
8.5.8 Speed Coincidence Output - 8-47

8.6 Operating Using Position Control - - - - - - - - - - - - - - - - - - - 8-48
8.6.1 Setting Parameters - 8-48
8.6.2 Setting the Electronic Gear - 8-50
8.6.3 Position Reference - 8-53
8.6.4 Smoothing - 8-57
8.6.5 Positioning Completed Output Signal - 8-58
8.6.6 Positioning Near Signal - 8-59
8.6.7 Reference Pulse Inhibit Function (INHIBIT) - - - - - - - - - - - - - - - - - - 8-60

8.7 Operating Using Torque Control - 8-61
8.7.1 Setting Parameters - 8-61
8.7.2 Torque Reference Input - 8-61
8.7.3 Adjusting the Reference Offset - 8-62
8.7.4 Limiting Servomotor Speed during Torque Control - - - - - - - - - - - - - 8-64

8.8 Operating Using Speed Control with an Internally Set Speed 8-66
8.8.1 Setting Parameters - 8-66
8.8.2 Input Signal Settings - 8-67
8.8.3 Operating Using an Internally Set Speed - 8-67

8.9 Limiting Torque - 8-69
8.9.1 Internal Torque Limit (Limiting Maximum Output Torque) - - - - - - - - - 8-69
8.9.2 External Torque Limit (Output Torque Limiting by Input Signals) - - - - 8-70
8.9.3 Torque Limiting Using an Analog Voltage Reference - - - - - - - - - - - - 8-72
8.9.4 Torque Limiting Using an External Torque Limit
and Analog Voltage Reference - 8-73
8.9.5 Checking Output Torque Limiting during Operation - - - - - - - - - - - - - 8-74

8.10 Control Mode Selection - 8-75
8.10.1 Setting Parameters - 8-75
8.10.2 Switching the Control Mode - 8-75

8.11 Other Output Signals - 8-77
8.11.1 Servo Alarm Output (ALM) and
Alarm Code Output (ALO1, ALO2, ALO3) - - - - - - - - - - - - - - - - - - - 8-77
8.11.2 Warning Output (/WARN) - 8-78
8.11.3 Running Output Signal (/TGON) - 8-78
8.11.4 Servo Ready (/S-RDY) Output - 8-79

8.1 Trial Operation

Make sure that all wiring has been completed prior to trial operation.

Perform the following three types of trial operation in order. Instructions are given for speed control mode (standard setting) and position control mode. Unless otherwise specified, the standard parameters for speed control mode (factory setting) are used.

(1)Trial Operation for Servomotor without Load (Refer to 8.1.1.)

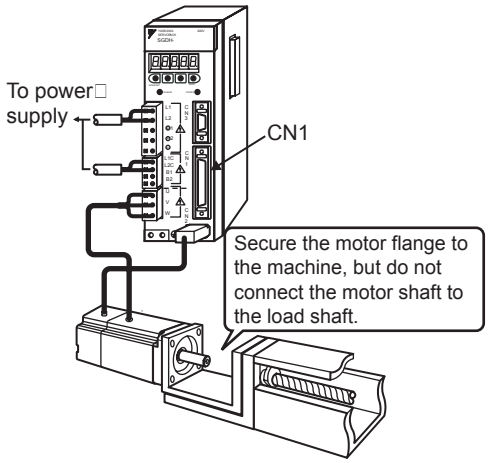

■ Purpose

The servomotor is operated without connecting the shaft to the machine in order to confirm that the following wiring is correct.

- Power supply circuit wiring
- Motor wiring
- Encoder wiring
- Motor's rotation direction and motor speed

(2)Trial Operation for Servomotor with Host Reference (Refer to 8.1.2.)

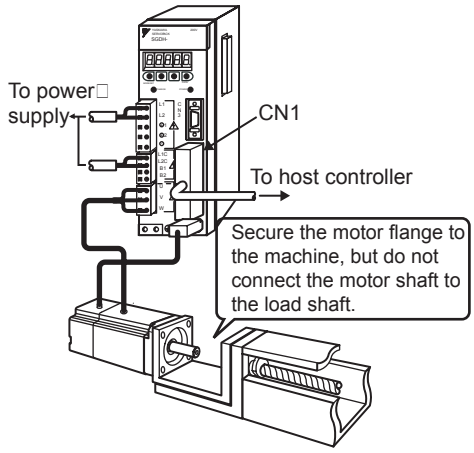

■ Purpose

The servomotor is operated without connecting the shaft to the machine in order to confirm that the following wiring is correct.

- I/O signal wiring between the SERVOPACK and the host controller.
- Motor's rotation direction, motor speed, and number of rotations
- Check the operation of the brake, overtravel, and other protective functions.

(3)Trial Operation for the Servomotor and Machine Combined (Refer to 8.1.3.)

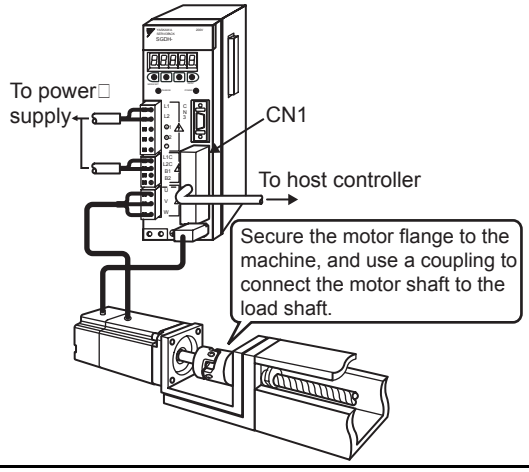

■ Purpose

The servomotor is connected to the machine and trial operation is performed. The SERVOPACK is adjusted to match the machine characteristics.

- The servomotor's rotation direction, motor speed, and machine travel distance.
- Set the necessary parameters.

Step	Item	Description	Reference
1	Installation and mounting	Install the servomotor and SERVOPACK according to the installation conditions. (Do not connect the servomotor to the machine because the servomotor will be operated first under a no-load condition for checking.)	–
2	Wiring and connections	Connect the power supply circuit (L1 and L2 or L1, L2 and L3), servomotor wiring (U, V, W), I/O signal wiring (CN1), and encoder wiring (CN2). During *(1) Trial Operation for Servomotor without Load*, however, disconnect the CN1 connector.	–
3	Turn ON the power.	Turn ON the power. Check the panel operator to make sure that the SERVOPACK is running normally. If using a servomotor equipped with an absolute encoder, perform the setup for the absolute encoder. (Refer to *8.4.5 Absolute Encoder Setup (Fn008)*.)	–
4	Execute jog mode operation.	Execute jog mode operation with the servomotor alone under a no-load condition.	Jog Operation
5	Connect input signals.	Connect the input signals (CN1) necessary for trial operation.	–
6	Check input signals.	Use the internal monitor function to check the input signals. Turn ON the power, and check the emergency stop, brake, overtravel, and other protective functions for correct operation.	–
7	Input the servo ON signal.	Input the servo ON signal, and turn ON the servomotor.	Host Reference
8	Input reference.	Input the reference for the control mode being used, and check the servomotor for correct operation.	Host Reference
9	Check protective operation.	Turn OFF the power, and then connect the servomotor to the machine. If using a servomotor with an absolute encoder, set up the absolute encoder and make the initial settings for the host controller to match the machine's zero position.	–
10	Set necessary parameters.	Using the same procedure as you did to input a reference in step 8, operate the servomotor from the host controller and set the parameter so that the machine's travel direction, travel distance, and travel speed all correspond to the reference.	Host Reference
11	Operation	The servomotor can now be operated. Adjust the servo gain if necessary. Refer to *9.1 Autotuning*. If a problem occurs, refer to *Chapter 10 Inspection, Maintenance, and Troubleshooting*.	Host Reference

8.1.1 Trial Operation for Servomotor without Load

⚠ CAUTION

- Release the coupling between the servomotor and the machine, and secure only the servomotor without a load.
  To prevent accidents, initially perform the trial operation for servomotor under no-load conditions (with all couplings and belts disconnected).

In this section, confirm the cable connections of the main circuit power supply, motor and encoder except the connection to host controller. Incorrect wiring is generally the reason why servomotors fail to operate properly during the trial operation.

Confirm the wiring, and then conduct the trial operation for servomotor without load.

The operation and the display are the same both for the panel operator and optional digital operator (JUSP-OP02A-2).

Step	Description	Check Method and Remarks
1	Secure the servomotor. 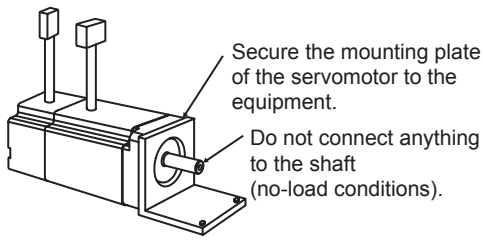 	Follow *3.8.1 Precautions on Servomotor Installation* and secure the servomotor mounting plate to the machine in order to prevent the servomotor from moving during operation. Do not connect the servomotor shaft to the machine. The servomotor may tip over during rotation.
2	Check the power supply circuit, servomotor, and encoder wiring. 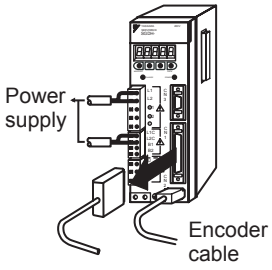 	With the CN1 connector not connected, check the power supply circuit and servomotor wiring. Do not use the CN1 I/O signals here. Refer to *6.1 Wiring Main Circuit* for wiring example of main circuit. Refer *to 2.5 Selecting Cables* for motor and encoder cables.
3	Turn ON power. Normal Display 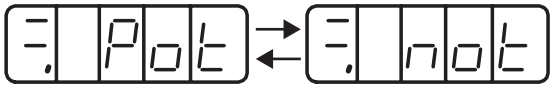 Alternate display Example of Alarm Display 	If the power is correctly supplied, the panel operator display on the front panel of the SERVOPACK will appear as shown on the left. The display on the left indicates that Forward Run Prohibited (P-OT) and Reverse Run Prohibited (N-OT). For details, refer to *7.1.4 Status Display*. If an alarm display appears, the power supply circuit, servomotor wiring, or encoder wiring is incorrect. If an alarm is displayed, turn OFF the power, find the problem, and correct it. Refer to *10.1 Troubleshooting*.
4	Release the brake before driving the servomotor when a servomotor with brake is used.	Refer to *8.3.4 Setting for Holding Brakes* and *8.4.5 Absolute Encoder Setup (Fn008)*. Absolute Encoder Setup (Fn008) operation can be omitted when setting the Pn002 to n.□1□□ (Uses absolute encoder as an incremental encoder) only during trial operation.

Step	Description	Check Method and Remarks
5	Operate with the panel operator. 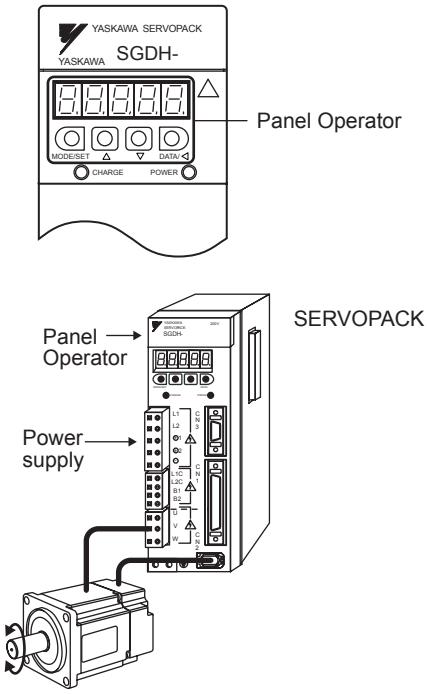 	Use the panel operator to operate the servomotor with utility function Fn002 (Jog Mode Operation). Check that the servomotor rotates in the forward direction by UP key, and reverse direction by DOWN key. The operation is completed when the operation is performed as described below and the alarm display does not appear. Complete the Fn002 (Jog Mode Operation) and turn OFF the power. For operation method of the panel operator, refer to *7.1 Functions on Digital Operator/Panel Operator*. The servomotor speed can be changed using the Pn304 (JOG Speed). The factory setting for jog speed is 500 min^{-1}.

- JOG Mode Operation (Fn002)

Step	Display after Operation	Digital Operator	Panel Operator	Description
1	Fn000	DSPL SET (DSPL/SET Key)	MODE/SET (MODE/SET Key)	Press the DSPL/SET or MODE/SET Key to select the utility function mode.
2	Fn002			Press the UP or DOWN Key to select Fn002. Note: The digit that can be set will blink.
3	-.-.JoG	DATA ENTER (DATA/ENTER Key)	DATA/◀ (DATA/SHIFT Key) (Press at least 1 s.)	Press the DATA/ENTER Key once, or DATA/SHIFT Key for more than one second. The display shown at the right will appear, and the servomotor will enter JOG operation mode. The servomotor can be operated with the panel operator in this condition.
4	-.-.JoG	JOG SVON (SVON Key)	MODE/SET (MODE/SET Key)	Press the SVON or MODE/SET Key. This will turn ON the power to the servomotor.
5	Forward running Reverse running			Press the UP Key (forward) or DOWN Key (reverse). The servomotor will operate as long as the key is pressed.
6	-.-.JoG	DSPL SET (DSPL/SET Key)	MODE/SET (MODE/SET Key)	Press the DSPL/SET or MODE/SET Key. This will turn OFF the power to the servomotor. The power will remain OFF even if the SVON or DATA/SHIFT Key is pressed for more than one second.
7	Fn002	DATA ENTER (DATA/ENTER Key)	DATA/◀ (DATA/SHIFT Key) (Press at least 1 s.)	Press the DATA/ENTER Key once, or DATA/SHIFT Key for more than one second to return to the Fn002 display of the utility function mode.

INFO

The servomotor's rotation direction depends on the setting of parameter Pn000.0 (Direction Selection). The example above describes operation with Pn000.0 in the factory setting.

Pn304	JOG Speed			Speed Position Torque
	Setting Range	Setting Unit	Factory Setting	Setting Validation
	0 to 10000 min^{-1}	1 min^{-1}	500 min^{-1}	Immediately
Sets the utility function Fn002 (Jog Mode Operation) to the reference value of motor speed.				

The motor can be operated using only the digital operator without reference from the host controller. The following conditions are required to perform jog mode operation.

1. The servo on (/S-ON) input signal is OFF (H level). Refer to *8.3.1 Setting the Servo ON Signal*.
2. Pn50A is not set to n.□□7□ (Sets signal ON) with the external input signal allocation. Refer to *7.3.2 Input Circuit Signal Allocation*.

Pay attention that the Forward Run Prohibited (P-OT) and Reverse Run Prohibited (N-OT) signals are invalid during jog mode operation. For the jog mode operation procedures, refer to *pages 8-6* and *8-7*.

8.1.2 Trial Operation for Servomotor without Load from Host Reference

Check that the servomotor move reference or I/O signals are correctly set from the host controller to the SERVOPACK. Also check that the wiring and polarity between the host controller and SERVOPACK, and the SERVOPACK operation settings are correct. This is final check before connecting the servomotor to the machine.

(1) Servo ON Command from the Host

The following circuits are required: External input signal circuit or equivalent.

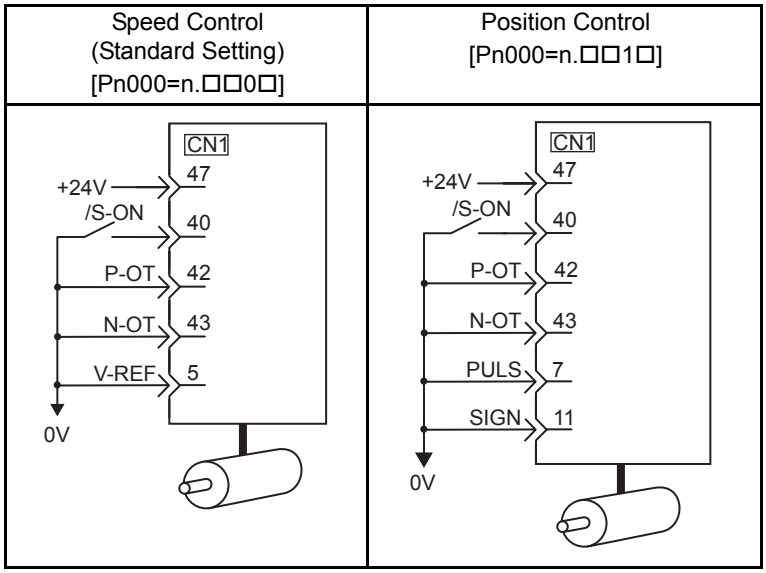

Change the SEN signal (CN1-4) to the H level when an absolute encoder is used.

Step	Description	Check Method and Remarks
1	Configure an input signal circuit necessary for servo ON. Connect the I/O signal connectors (CN1) in the circuit on the previous page or equivalent to input the signal necessary for servo ON. Then turn OFF the power and connect the CN1 to the SERVOPACK. 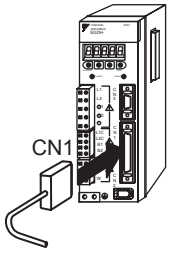 	Satisfy the following conditions: 1. Servo ON (/S-ON) input signal can be input. 2. Forward Run Prohibited (P-OT) and Reverse Run Prohibited (N-OT) input signals are turned ON (L level). (Forward run and reverse run are prohibited.) 3. Reference input (0V reference or 0 pulse) is not input. To omit the external wiring, the input terminal function can be set to "Always ON" or "Always OFF" using the input signal allocation function of parameter. Refer to *7.3.2 Input Circuit Signal Allocation*. When the absolute encoder is used, Absolute Encoder Setup (Fn008) operation and the SEN signal wiring can be omitted when setting the Pn002 to n.□1□□ (Uses absolute encoder as an incremental encoder) only during trial operation.
2	Turn ON the power and make sure that the panel operator display is as shown below. 	The input signal setting is not correct if the display is not the same as on the left. Check the input signal using the Un005 (input signal monitor) from the panel operator. Un005 = 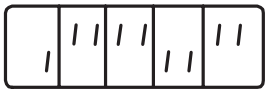 Check input signal wiring in monitor mode using the digital operator or panel operator. Refer to *7.4.1 List of Monitor Modes*. Turn ON and OFF each signal line to see if the LED monitor bit display on the digital operator changes as shown below. 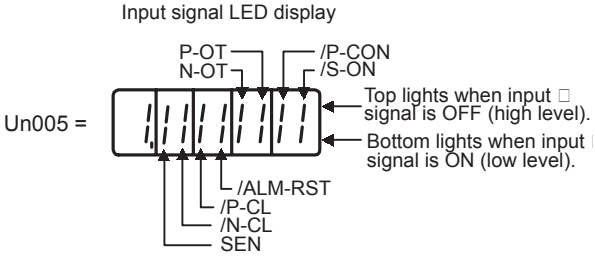 If an absolute encoder is being used, the servo will not turn ON when the servo ON signal (/S-ON) is input unless the SEN signal is also ON. When the SEN signal is checked in monitor mode, the top of the LED will light because the SEN signal is high when ON.
3	Input the /S-ON signal, then make sure that the display of the panel operator is as shown below. 	If an alarm display appears, correct it according to *10.1 Troubleshooting*. If there is noise in the reference voltage during speed control, the horizontal line (–) at the far left edge of the panel operator display may blink. Also the servomotor may turn very slowly. Refer to *6.4 Others* and take a preventive measure.

(2) Operating Procedure in Speed Control Mode (Pn000 = n.□□0□)

The following circuit is required: External input signal circuit or equivalent.

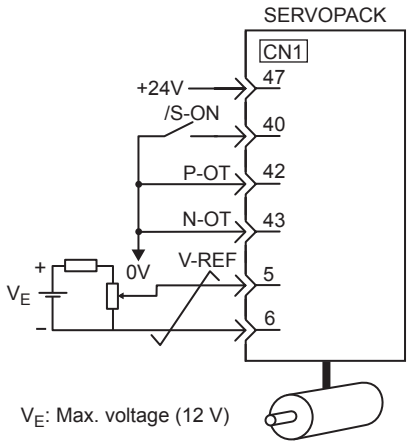

Step	Description	Check Method and Remarks
1	Check the power and input signal circuits again, and check that the speed reference input (voltage between the V-REF and SG) is 0 V.	Refer to the above figure for input signal circuit.
2	Turn ON the servo ON (/S-ON) input signal.	If the servomotor rotates at extremely slow speed, refer to *8.5.3 Adjusting Offset*, and use the reference voltage offset to keep the servomotor from moving.
3	Generally increase the speed reference input voltage between V-REF and SG from 0 V.	The factory setting is 6 V/rated rotation speed.
4	Check the speed reference input to the SERVO-PACK (Un000 [min-1]).	Refer to *7.1.3 Basic Mode Selection and Operation* for how it is displayed.
5	Check the Un000 (motor speed [min-1].	Refer to *7.1.3 Basic Mode Selection and Operation* for how it is displayed.
6	Check that the Un001 and Un000 values in steps 4 and 5 are equal.	Change the speed reference input voltage and check that Un001 and Un000 values are equal for multiple speed references.
7	Check the speed reference input gain and motor rotation direction.	Refer to the following equation to change the Pn300 (speed reference input gain). Un001=(voltage between V-REF) [V] × Pn300 [300 min-1/6V] To change the motor rotation direction without changing polarity for speed reference input gain, refer to *8.3.2 Switching the Servomotor Rotation Direction*. Perform the operation from step 2 again after the motor rotation direction is changed.
8	When the speed reference input is set to 0 V and servo OFF status enters, the trial operation for servomotor without load is completed.	–

8

INFO

■ When Position Control is configured at the Host

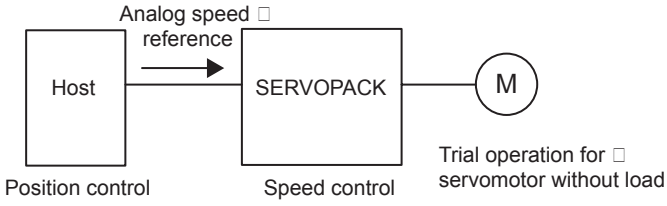

When the SERVOPACK conducts speed control and position control is conducted at the host controller, perform the operations below, following the operations in *(2) Operating Procedure in Speed Control Mode (Pn000 = n.□□0□)* on the previous page.

Step	Description	Check Method and Remarks
9	Check the input signal circuit again, and check that the speed reference input (voltage between the V-REF and SG) is 0 V.	Refer to the above figure for input signal circuit.
10	Turn ON the servo ON (/S-ON) input signal.	If the servomotor rotates at extremely slow speed, refer to *8.5.3 Adjusting Offset*, and use the reference voltage offset to keep the servomotor from moving.
11	Send the command for the number of motor rotation easy to check (for example, one motor revolution) from the host controller in advance, and check the sent number of rotation and actual number of rotation by visual inspection and the Un003 (rotation angle1)[pulse].	Refer to *7.1.3 Basic Mode Selection and Operation* for how it is displayed. Un003 (rotation angle 1)[pulse]: The number of pulses from the zero point.
12	If the sent number of rotation and actual number of rotation in step 11 are not equal, correctly set the Pn201 (PG divided ratio) outputting the encoder pulse from the SERVOPACK.	Refer to *8.5.7 Encoder Signal Output* for how to set. PG divider (Pn201 [P/Rev]): The number of encoder pulses per revolution
13	When the speed reference input is set to 0 V and servo OFF status enters, the trial operation for position control with the host controller is completed.	–

(3) Operating Procedure in Position Control Mode (Pn000 = n.□□1□)

The following circuit is required: External input signal circuit or equivalent.

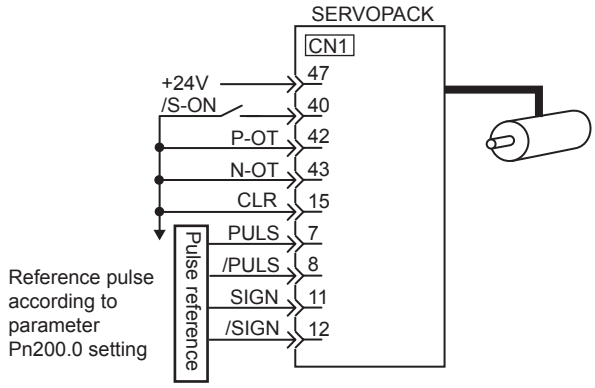

Step	Description	Check Method and Remarks
1	Match the reference pulse form with the pulse output form from the host controller.	Set the reference pulse with Pn200=n.□□□×. Refer to *8.6.1 (2) Setting a Reference Pulse Form*.
2	Set the reference unit and electronic gear ration so that it coincides with the host controller setting.	Set the electronic gear ratio with Pn202/Pn203. Refer to *8.6.2 Setting the Electronic Gear*.
3	Turn ON the power and the servo ON (/S-ON) input signal.	–
4	Send the pulse reference for the number of motor rotation easy to check (for example, one motor revolution) and with slow speed from the host controller in advance.	Set the motor speed of several 100 min^{-1} for the reference pulse speed because such speed is safe.
5	Check the number of reference pulses input to the SERVOPACK by the changed amount before and after the Un00C (input reference pulse counter) [pulse] was executed.	Refer to *7.1.3 Basic Mode Selection and Operation* for how it is displayed. Un00C (input reference pulse counter) [pulse]
6	Check the actual number of motor rotation [pulse] by the changed amount before and after the Un003 (rotation angle 1) [pulse] was executed.	Refer to *7.1.3 Basic Mode Selection and Operation* for how it is displayed. Un003 (rotation angle 1) [pulse]
7	Check that steps 5 and 6 satisfy the following equation: Un003=Un00C × (Pn202/Pn203)	–
8	Check that the motor rotation direction is the same as the reference.	Check the input pulse polarity and input reference pulse form. Refer to *8.6.1 (2) Setting a Reference Pulse Form*.
9	Input the pulse reference with the large number of motor rotation from the host controller to obtain the constant speed.	Set the motor speed of several 100 min^{-1} for the reference pulse speed because such speed is safe.
10	Check the reference pulse speed input to the SERVOPACK using the Un007 (input reference pulse speed) [min^{-1}].	Refer to *7.1.3 Basic Mode Selection and Operation* for how it is displayed. Un007 (input reference pulse speed) [min^{-1}]
	The number of input reference pulses (Un00C) can be obtained from the following equation. $\text{Un007(input reference pulse speed)} = \underbrace{\text{input reference pulse [pulses/S]}}_{\text{Reference input ppm}} \times 60 \times \underbrace{\frac{Pn202}{Pn203}}_{\text{Electronic gear ratio}} \times \underbrace{\frac{1}{2^{13}(8192)}}_{\text{Encoder pulse}^{*}}$ * The encoder pulse differs depending on the model of the servomotor used.	

8

Step	Description	Check Method and Remarks
11	Check the motor speed using the Un000 (motor speed) [min^{-1}].	Refer to *7.1.3 Basic Mode Selection and Operation* for how it is displayed. Un000 (motor speed) [min^{-1}]
12	Check that the Un007 and Un000 values in steps 9 and 10 are equal.	–
13	Check the motor rotation direction.	To change the motor rotation direction without changing input reference pulse form, refer to *8.3.2 Switching the Servomotor Rotation Direction*. Perform the operation from step 9 again after the motor rotation direction is changed.
14	When the pulse reference input is stopped and servo OFF status enters, the trial operation for servomotor without load and using position control with the host controller is completed.	–

8.1.3 Trial Operation with the Servomotor Connected to the Machine

⚠ WARNING

- Follow the procedure below for trial operation precisely as given.
  Malfunctions that occur after the servomotor is connected to the machine not only damage the machine, but may also cause an accident resulting death or injury.

Follow the procedures below to perform the trial operation.

1. Set the necessary parameters according to the machine configuration.
2. Match the direction of rotation and speed to equipment specifications.

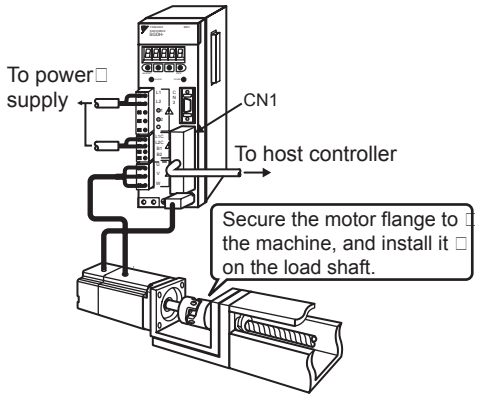

Step	Description	Check Method and Remarks
1	Turn ON the power and make the settings for mechanical configuration related to protective function such as overtravel and brake.	Refer to *8.3 Setting Common Basic Functions*. When a servomotor with brake is used, take advance measures to prevent vibration due to gravity acting on the machine or external forces before checking the brake operation. Check that both servomotor and brake operations are correct. For details, refer to *8.3.4 Setting for Holding Brakes*.
2	Set the necessary parameters for control mode used.	Refer to *8.5 Operating Using Speed Control with Analog Reference*, *8.6 Operating Using Position Control*, and *8.7 Operating Using Torque Control* for control mode used.
3	Connect the servomotor to the machine with coupling, etc., while the power is turned OFF.	Refer to *3.8.1 Precautions on Servomotor Installation*.
4	Check that the SERVOPACK is servo OFF status and then turn ON the power to the machine (host controller). Check again that the protective function in step 1 operates normally.	Refer to *8.3 Setting Common Basic Functions*. For steps 4 to 8, take advance measures for emergency stop so that the servomotor can stop safely when an error occurs during operation.
5	Perform trial operation with the servomotor connected to the machine, following each section in *8.1.2 Trial Operation for Servomotor without Load from Host Reference*.	Check that the trial operation is completed with as the trial operation for servomotor without load. Also check the settings for machine such as reference unit.
6	Check the settings of parameters for control mode used set in step 2 again.	Check that the servomotor rotates matching the machine operating specifications.

Step	Description	Check Method and Remarks
7	Adjust the servo gain and improve the servomotor response characteristics, if necessary.	Refer to *9.1 Autotuning*. The servomotor will not be broken in completely during the trial operation. Therefore, let the system run for a sufficient amount of additional time to ensure that it is properly broken in.
8	Write the parameters set for maintenance in *11.4 Parameter Recording Table*. Then the trial operation with the servomotor connected to the machine is completed.	–

8.1.4 Servomotor with Brakes

Holding brake operation of the servomotor with brake can be controlled with the brake interlock output (/BK) signal of the SERVOPACK.

When checking the brake operation, take advance measures to prevent vibration due to gravity acting on the machine or external forces. Check the servomotor operation and holding brake operation with the servomotor separated from the machine. If both operations are correct, connect the servomotor and perform trial operation.

For wiring on a servomotor with brakes and parameter settings, refer to *8.3.4 Setting for Holding Brakes*.

8.1.5 Position Control by Host Controller

As described above, be sure to separate the servomotor and machine before performing trial operation of the servomotor without a load. Refer to the following table, and check the servomotor operation and specifications in advance.

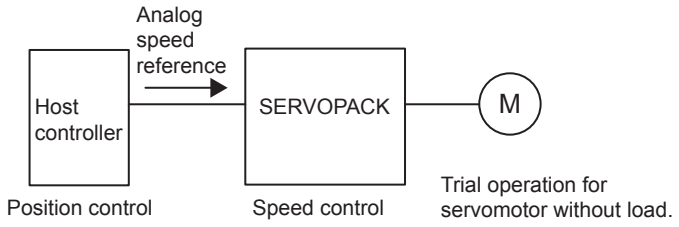

Reference from the Host Controller	Check Item	Check Method	Review Items	Reference Section
JOG Operation (Constant Reference Speed Input from Host Controller)	Motor Speed	Check motor speed as follows: • Use the motor speed monitor (Un000) on the panel operator. • Run the servomotor at low speed. Input a reference speed of 60 min^{-1} for example to check to see if the servomotor makes one revolution per second.	Check the parameter setting at Pn300 to see if reference speed gain is correct.	8.5.1
Simple Positioning	No. of motor rotation	Input a reference equivalent to one motor rotation and visually check to see if the shaft makes one revolution.	Check the parameter setting at Pn201 to see if the number of PG dividing pulses is correct.	8.5.7
Overtravel (P-OT and N-OT Used)	Whether the servomotor stops rotating when P-OT and N-OT signals are input	Check to see if the servomotor stops when P-OT and N-OT signals are input during continuous servomotor operation.	Review P-OT and N-OT wiring if the servomotor does not stop.	8.3.3

8.2 Control Mode Selection

The control modes supported by the SGDH SERVOPACK are described below.

Parameter		Control Mode	Reference Section
Pn000	n.□□**0**□ (Factory setting)	Speed Control (Analog voltage speed reference) Controls servomotor speed by means of an analog voltage speed reference. Use in the following instances. • To control speed • For position control using the encoder feedback division output from the SERVOPACK to form a position loop in the host controller.	8.5
	n.□□**1**□	Position Control (Pulse train position reference) Controls the position of the servomotor by means of a pulse train position reference. Controls the position with the number of input pulses, and controls the speed with the input pulse frequency. Use when positioning is required.	8.6
	n.□□**2**□	Torque Control (Analog voltage speed reference) Controls the servomotor's output torque by means of an analog voltage torque reference. Use to output the required amount of torque for operations such as pressing.	8.7
	n.□□**3**□	Speed Control (Contact input speed control) Uses the three input signals /P-CON (/SPD-D), /P-CL (/SPD-A), and /N-CL (/SPD-B) to control the speed as set in advance in the SERVOPACK. Three operating speeds can be set in the SERVOPACK. (In this case, an analog reference is not necessary.)	8.8
	n.□□**4**□ • • • n.□□**B**□	These are switching modes for using the four control methods described above in combination. Select the control method switching mode that best suits the application.	8.10

8

8.3 Setting Common Basic Functions

8.3.1 Setting the Servo ON Signal

This sets the servo ON signal (/S-ON) that determines whether the servomotor power is ON or OFF.

(1) Servo ON signal (/S-ON)

Type	Name	Connector Pin Number	Setting	Meaning
Input	/S-ON	CN1-40 (Factory setting)	ON (low level)	Servomotor power ON. Servomotor can be operated.
			OFF (high level)	Servomotor power OFF. Servomotor cannot be operated.

■ IMPORTANT

Always input the servo ON signal before inputting the input reference to start or stop the servomotor. Do not input the input reference first and then use the /S-ON signal to start or stop. Doing so will degrade internal elements and lead to malfunction.

Note: A parameter can be used to re-allocate the input connector number for the /S-ON signal. Refer to *7.3.2 Input Circuit Signal Allocation.*

(2) Enabling/Disabling the Servo ON Signal

A parameter can be always used to set a parameter servo ON condition. This eliminates the need to wire /S-ON, but care must be taken because the SERVOPACK can operate as soon as the power is turned ON.

Parameter		Meaning
Pn50A	n.□□**0**□	Inputs the /S-ON signal from the input terminal CN1-40. (Factory setting)
	n.□□**7**□	Constantly enables the /S-ON signal.

- After changing these parameters, turn OFF the main circuit and control power supplies and then turn them ON again to enable the new settings.
- When the parameter is set to constantly “enable” the signal, resetting an alarm can only be done by turning the power OFF and ON. (Alarm reset is disabled.)

8.3.2 Switching the Servomotor Rotation Direction

The rotation direction of the servomotor can be switched without changing the reference pulse to the SERVOPACK or the reference voltage polarity.

This causes the travel direction (+, -) of the shaft reverse. The output signal polarity such as encoder pulse output and analog monitor signal from the SERVOPACK does not change.

The standard setting for “forward rotation” is counterclockwise as viewed from the drive end.

Parameter		Name	Reference	
			Forward Reference	Reverse Reference
Pn000	n.□□□**0**	Standard setting (CCW = Forward) (Factory setting)	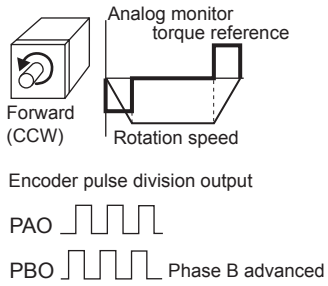	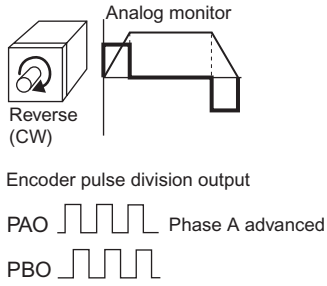
	n.□□□**1**	Reverse Rotation Mode (CW = Reverse)	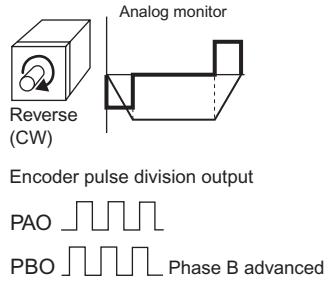	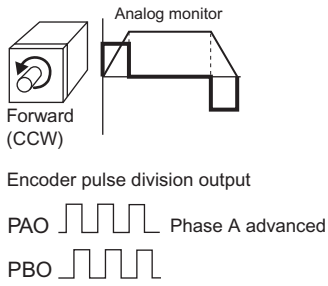
The direction of P-OT and N-OT change. For Pn000 = n.□□□0 (standard setting), counterclockwise is P-OT. For Pn000 = n.□□□1 (Reverse Rotation Mode), clockwise is P-OT.				

8

8.3.3 Setting the Overtravel Limit Function

The overtravel limit function forces movable machine parts to stop if they exceed the allowable range of motion and turn ON a limit switch.

(1) Connecting the Overtravel Signal

To use the overtravel function, connect the following overtravel limit switch input signal terminals.

Type	Name	Connector Pin Number	Setting	Meaning
Input	P-OT	CN1-42 (Factory setting)	ON (low level)	Forward rotation allowed. Normal operation status.
			OFF (high level)	Forward rotation prohibited. Forward overtravel.
Input	N-OT	CN1-43 (Factory setting)	ON (low level)	Reverse rotation allowed. Normal operation status.
			OFF (high level)	Reverse rotation prohibited. Reverse overtravel.

Connect limit switches as shown below to prevent damage to the devices during linear motion.

Rotation in the opposite direction is possible during overtravel. For example, reverse rotation is possible during forward overtravel.

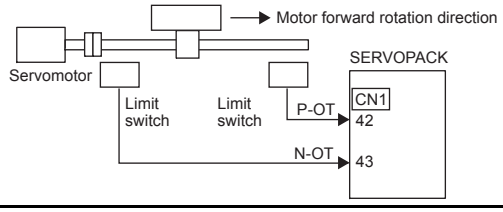

■ IMPORTANT

When the servomotor stops due to overtravel during position control, the position error pulses are held. A clear signal (/CLR) input is required to clear the error pulses.

⚠ CAUTION

When using the servomotor on a vertical axis, the workpiece may fall in the overtravel condition.
To prevent this, always set the zero clamp after stopping with Pn001 = n.□□1□.
Refer to *(3) Selecting the Motor Stop Method When Overtravel is Used* in this section.

(2) Enabling/Disabling the Overtravel Signal

A parameter can be set to disable the overtravel signal. If the parameter is set, there is no need to wire the overtravel input signal.

Parameter		Meaning
Pn50A	n.**2**□□□	Inputs the Forward Run Prohibited (P-OT) signal from CN1-42. (Factory setting)
	n.**8**□□□	Disables the Forward Run Prohibited (P-OT) signal. (Allows constant forward rotation.)
Pn50B	n.□□□**3**	Inputs the Reverse Run Prohibited (N-OT) signal from CN1-43. (Factory setting)
	n.□□□**8**	Disables the Reverse Run Prohibited (N-OT) signal. (Allows constant reverse rotation.)

- Applicable control methods: Speed control, position control, and torque control
- After changing these parameters, turn OFF the main circuit and control power supplies and then turn them ON again to enable the new settings.

* A parameter can be used to re-allocate input connector number for the P-OT and N-OT signals. Refer to *7.3.2 Input Circuit Signal Allocation*.

(3) Selecting the Motor Stop Method When Overtravel is Used

This is used to set the stop method when an overtravel (P-OT, N-OT) signal is input while the motor is operating.

Parameter		Stop Mode	Mode After Stopping	Meaning
Pn001	n.□□**00**	Stop by dynamic brake	Coast	Rapidly stops the servomotor by dynamic braking (DB), then places it into Coast (power OFF) Mode.
	n.□□**01**			Coasts the servomotor to a stop, then places it into Coast (power OFF) Mode.
	n.□□**02**	Coast to a stop		Stops the servomotor in the same way as when the servo is OFF (coasts to a stop), then places it into Coast (power OFF) Mode.
	n.□□**1**□	Decelerate to stop	Zero Clamp	Decelerates the servomotor with emergency stop torque (Pn406), then places it into Zero Clamp (Servolock) Mode.
	n.□□**2**□		Coast	Decelerates the servomotor with emergency stop torque (Pn406), then places it into Coast (power OFF) Mode.

- During torque control, these settings affect only the servomotor stopping method. After it is stopped, the servomotor enters Coast Mode regardless of the setting.
- After changing these parameters, turn OFF the main circuit and control power supplies and then turn them ON again to enable the new settings.
- During n.□□02 Coast Mode, SERVOPACK can be resumed using the servo ON signal.

■ TERMS

- Stop by dynamic brake: Stops by using the dynamic brake (with short-circuiting by a circuit of SERVOPACK).
- Coast to a stop: Stops naturally, with no brake, by using the friction resistance of the motor in operation.
- Decelerate to stop: Stops by using deceleration (braking) torque.
- Zero Clamp Mode: A mode forms a position loop by using the position reference zero.

* For details on stopping methods when the servo turns OFF or when an alarm occurs, refer to *8.3.5 Selecting the Stopping Method After Servo OFF*.

(4) Setting the Stop Torque for Overtravel

Pn406	Emergency Stop Torque			Speed / Position / Torque
	Setting Range	Setting Unit	Factory Setting	Setting Validation
	0 to 800	%	800	Immediately

- This sets the stop torque for when the overtravel signal (P-OT, N-OT) is input.
- The setting unit is a percentage of the rated torque (i.e., the rated torque is 100%).
- The value large enough to be the motor maximum torque, 800% is set as the factory setting for emergency stop torque. However, the actual output emergency stop torque is determined by motor ratings.

8.3.4 Setting for Holding Brakes

The holding brake is used when a SERVOPACK controls a vertical axis. In other words, a servomotor with brake prevents the movable part from shifting due to gravity when the SERVOPACK power goes OFF. (Refer to *8.1.4 Servomotor with Brakes*.)

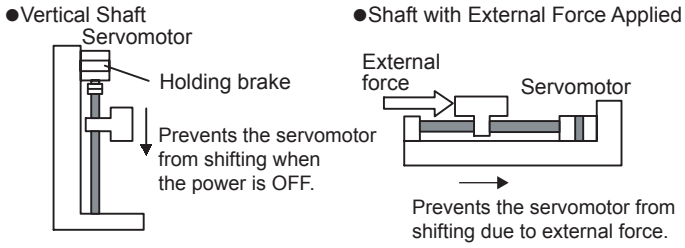

IMPORTANT

1. The brake built into the servomotor with brakes is a deenergization brake, which is used only to hold and cannot be used for braking. Use the holding brake only to hold a stopped motor. Brake torque is at least 120% of the rated motor torque.
2. When operating using only a speed loop, turn OFF the servo and set the input reference to 0 V when the brake is applied.
3. When forming a position loop, do not use a mechanical brake while the servomotor is stopped because the servomotor enters servolock status.

(1) Wiring Example

Use the SERVOPACK contact output signal /BK and the brake power supply to form a brake ON/OFF circuit. The following diagram shows a standard wiring example.

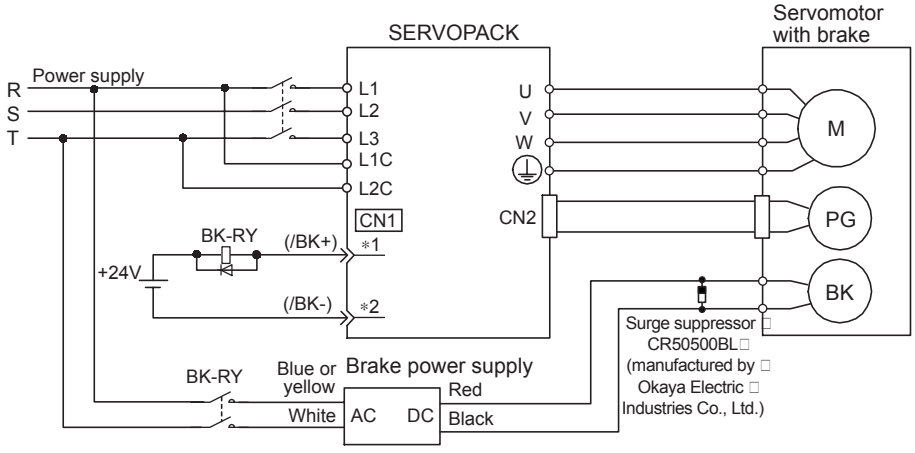

BK-R Y: Brake control relay

Brake power supply Input voltage 200-V models: LPSE-2H01
Input voltage 100-V models: LPDE-1H01

*1 and *2 are the output terminals allocated with Pn50F.2.

(2) Brake Interlock Output

Type	Name	Connector Pin Number	Setting	Meaning
Output	/BK	Must be allocated	ON (low level)	Releases the brake.
			OFF (high level)	Applies the brake.

This output signal controls the brake and is used only for a servomotor with a brake. This output signal is not used with the factory settings. The output signal must be allocated (with Pn50F). It does not need to be connected for servomotors without a brake.

■ IMPORTANT

The /BK signal is not output during overtravel, or when there is no power to the servomotor.

(3) Allocating Brake Signals (/BK)

The brake signal (/BK) is not used with the factory settings. The output signal must be allocated.

Parameter		Connector Pin Number		Meaning
		+ Terminal	- Terminal	
Pn50F	n.□**0**□□	–	–	The /BK signal is not used. (Factory setting)
	n.□**1**□□	CN1-25	CN1-26	The /BK signal is output from output terminal CN1-25, 26.
	n.□**2**□□	CN1-27	CN1-28	The /BK signal is output from output terminal CN1-27, 28.
	n.□**3**□□	CN1-29	CN1-30	The /BK signal is output from output terminal CN1-29, 30.

■ IMPORTANT

When set to the factory setting, the brake signal is invalid. When multiple signals are allocated to the same output terminal, the signals are output with OR logic. To output the /BK signal alone, disable the other output signals or set them to output terminals other than the one allocated to the /BK signal. For the allocation of SERVOPACK output signals other than /BK signal, refer to *7.3.3 Output Circuit Signal Allocation*.

(4) Setting the Brake ON Timing after the Servomotor Stops

With the factory setting, the /BK signal is output at the same time as the servo is turned OFF. The servo OFF timing can be changed with a parameter.

Pn506	Delay Time from Brake Reference Until Servo OFF		Speed	Position	Torque
	Setting Range	Setting Unit	Factory Setting	Setting Validation	
	0 to 50 (0 to 500 ms)	10 ms	0	Immediately	

- When using the servomotor to control a vertical axis, the machine movable part may shift slightly depending on the brake ON timing due to gravity or an external force. By using this parameter to delay turning the servo OFF, this slight shift can be eliminated.
- This parameter changes the brake ON timing while the servomotor is stopped.
  For details on brake operation while the servomotor is operating, refer to *(5) Setting the Brake ON Timing When Servomotor Running* in this section.

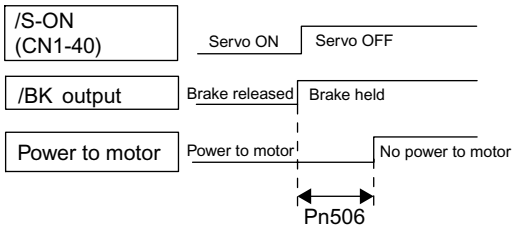

■ IMPORTANT

The servomotor will turn OFF immediately when an alarm occurs, regardless of the setting of this parameter.

The machine movable part may shift due to gravity or external force during the time until the brake operates.

8

(5) Setting the Brake ON Timing When Servomotor Running

The following parameters can be used to change the /BK signal output conditions when a stop reference is output during servomotor operation due to the servo OFF or an alarm occurring.

Pn507	Brake Reference Output Speed Level		Speed	Position	Torque
	Setting Range	Setting Unit	Factory Setting	Setting Validation	
	0 to 10000	min^{-1}	100	Immediately	

Pn508	Timing for Brake Reference Output during Motor Operation		Speed	Position	Torque
	Setting Range	Setting Unit	Factory Setting	Setting Validation	
	10 to 100 (100 to 1000 ms)	10 ms	50 (500 ms)	Immediately	

/BK Signal Output Conditions When Servomotor Running

The /BK signal goes to high level (brake ON) when either of the following conditions is satisfied:

- When the motor speed falls below the level set in Pn507 after the servo OFF.
- When the time set in Pn508 is exceeded after the servo OFF.

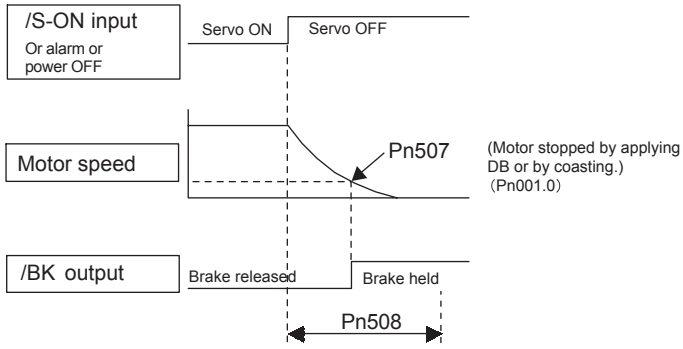

■ IMPORTANT

- The servomotor will be limited to its maximum speed even if the value set in Pn507 is higher than the maximum speed.
- Allocate the running output signal (/TGON) and the brake signal (/BK) to different terminals.
- If the brake signal (/BK) and running output signal (/TGON) are allocated to the same output terminal, the /TGON signal will go to low level at the speed at which the movable part drops on the vertical axis, which means that the /BK signal will not go to high level even if the conditions of this parameter are met. (This is because signals are output with OR logic when multiple signals are allocated to the same output terminal.) For output signal allocations, refer to *7.3.3 Output Circuit Signal Allocation.*

8.3.5 Selecting the Stopping Method After Servo OFF

The stopping method when the power to the SERVOPACK turns OFF can be selected.

Parameter		Stop Mode	Mode After Stopping	Meaning
Pn001	n.□□□**0**	Stop by dynamic brake	Dynamic Brake	Stops the servomotor by dynamic braking (DB), then holds it in Dynamic Brake Mode. (Factory setting)
	n.□□□**1**		Coast	Stops the servomotor by dynamic braking (DB), then places it into Coast (power OFF) Mode.
	n.□□□**2**	Coast to a stop	Coast	Stops the servomotor by coasting, then places it into Coast (power OFF) Mode.

These parameters are valid under the following conditions:
- When the /S-ON input signal is OFF (Servo OFF).
- When an alarm occurs.
- When main circuit power supply (L1, L2, L3) is OFF.

Similar to the Coast Mode, the n.□□□0 setting (which stops the servomotor by dynamic braking and then holds it in Dynamic Brake Mode) does not generate any braking force when the servomotor stops or when it rotates at very low speed.

■ TERMS
- Stop by dynamic brake: Stops by using the dynamic brake (with short-circuiting by a circuit of SERVOPACK).
- Coast to a stop: Stops naturally, with no brake, by using the friction resistance of the motor in operation.

■ IMPORTANT

The SERVOPACK is **forced to stop by dynamic braking, regardless of the settings of this parameter**, when the main circuit power supply (L1, L2, L3) or control power supply (L1C, L2C) turns OFF.
- SGDH-A3BE to -02BE (30 to 200 W for 100 V)
- SGDH-A3AE to -15AE (30 to 1.5 kW for 200 V)
- SGDH-05DE to -75DE (0.5 kw to 7.5 kW for 400 V)

If the servomotor must be stopped by coasting rather than by dynamic braking when the main circuit power supply (L1, L2, L3) or the control power supply (L1C, L2C) turns OFF, arrange the sequence externally so the servomotor wiring (U, V, W) will be interrupted.

IMPORTANT

The dynamic brake (DB)[1] is an emergency stop function.
If the servomotor is frequently started and stopped by turning the power ON/OFF or using the servo ON signal (/S-ON), the DB circuit will also be repeatedly operated, degrading the SERVOPACK's internal elements. Use the speed input reference and position reference to control the starting and stopping of the servomotor.

8

TERMS

[1] Dynamic brake (DB)

A common method for quickly stopping a servomotor. The servomotor is stopped by short-circuiting the servomotor circuit. This circuit is built into the SERVOPACK.

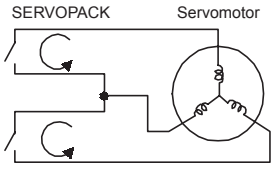

8.3.6 Instantaneous Power Loss Settings

Determines whether to continue operation or turn the servo OFF when the power supply voltage to the SERVOPACK main circuit is instantaneously interrupted.

Pn509	Instantaneous Power Cut Hold Time			Speed / Position / Torque
	Setting Range	Setting Unit	Factory Setting	Setting Validation
	20 to 1000	ms	20	Immediately

In power loss detection, the status of the main circuit power supply is detected and OFF status is ignored so servomotor operation will continue if the servomotor turns back ON within the time set in parameter Pn509.

In the following instances, however, the parameter setting will be invalid.

- If an insufficient voltage alarm (A.41) occurs during a power loss with a large servomotor load.
- When control is lost (equivalent to normal power OFF operation) with loss of the control power supply.

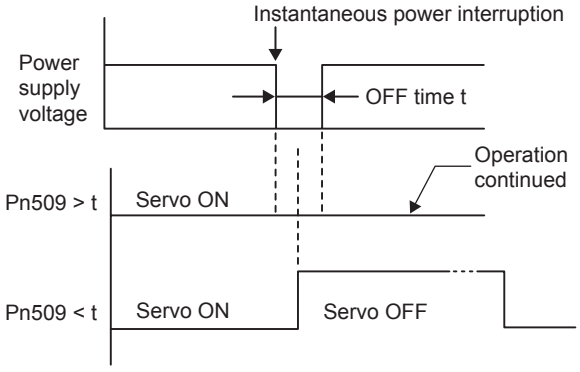

■ IMPORTANT

The maximum setting for the hold time during a power loss is 1,000 ms, but the hold time for the SERVOPACK control power supply is about 100 ms. The hold time for the main circuit power supply depends on the SERVOPACK output.

To continue SERVOPACK operation for a power loss that is longer than this, provide an uninterruptible power supply.

8.4 Absolute Encoders

⚠ WARNING

- The output range of multiturn data for the Σ-II series absolute detection system differs from that for conventional systems (15-bit encoder and 12-bit encoder). When an infinite length positioning system of the conventional type is to be configured with the Σ-II series, be sure to make the following system modification.

If a motor with an absolute encoder is used, a system to detect the absolute position can be made in the host controller. Consequently, operation can be performed without zero point return operation immediately after the power is turned ON.

SGM□H-□□□1□ servomotor: With 16-bit absolute encoder
SGM□H-□□□2□ servomotor: With 17-bit absolute encoder

Absolute Encoder Type	Resolution	Output Range of Multiturn Data	Action when Limit Is Exceeded
Σ Series SGD SGDA SGDB	12-bit 15-bit	-99999 to + 99999	• When the upper limit (+99999) is exceeded in the forward direction, the multiturn data is 0. • When the lower limit (-99999) is exceeded in the reverse direction, the multiturn data is 0.
Σ-II Series SGDM SGDH SGDP	16-bit 17-bit	-32768 to + 32767	• When the upper limit (+32767) is exceeded in the forward direction, the multiturn data is -32768.* • When the lower limit (-32767) is exceeded in the reverse direction, the multiturn data is +32768.*

* The action differs when the Multiturn Limit Setting (Pn205) is changed. Refer to *8.4.7 Multiturn Limit Setting*.

8

8.4.1 Interface Circuits

The following diagram shows the standard connections for a an absolute encoder mounted to a servomotor. The connection cables and wiring pin numbers depend on the servomotor. For details, refer to *chapter 5 Specifications and Dimensional Drawings of Cables and Peripheral Devices*.

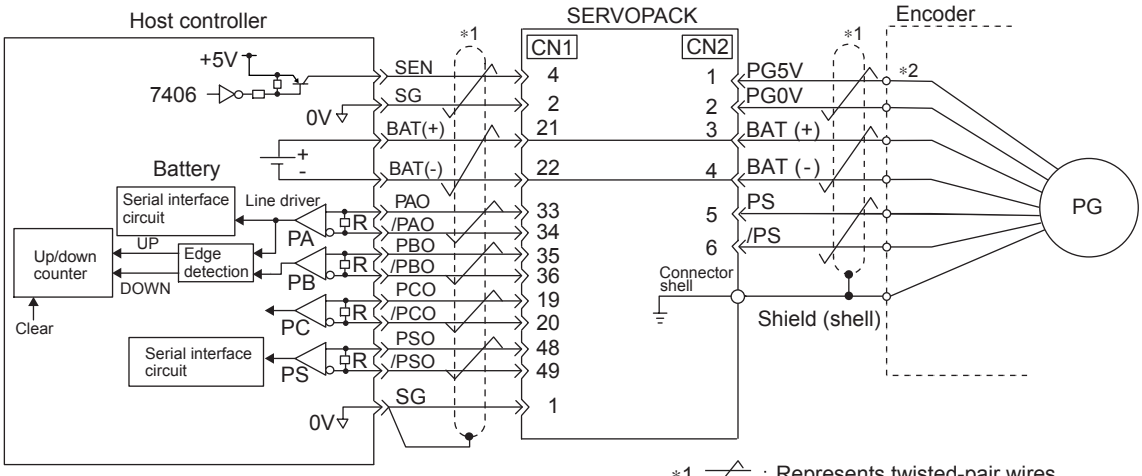

Applicable line driver:
Texas Instruments's SN75175 or KM3486
Terminating resistance R: 220 to 470 Ω

*1. : Represents twisted-pair wires.

*2. For wiring pin numbers, refer to *chapter 5 Specifications and Dimensional Drawings of Cables and Peripheral Devices*

- SEN Signal Connection

Type	Name	Connector Pin Number	Setting	Meaning
Input	SEN	CN1-4	OFF (low level)	Input when power is turned ON
			ON (high level)	Input at absolute data request

This input signal is required to output absolute data from the SERVOPACK.

Let at least three seconds elapse after turning ON the power before changing the SEN signal to high level.

When the SEN signal changes from low level to high level, the multiturn data and initial incremental pulses are output.

Until these operations have been completed, the servomotor cannot be turned ON regardless of the status of the servo ON signal (/S-ON). The panel operator display will also remain "b.b."

Refer to *8.4.6 Absolute Encoder Reception Sequence*.

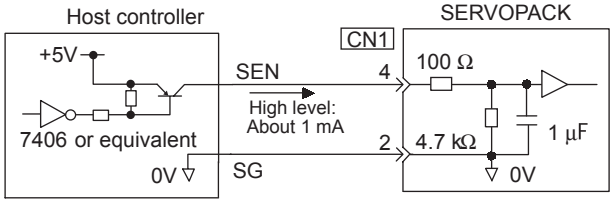

We recommend a PNP transistor.
Signal levels
High: 4.0 V min., Low: 0.8 V max.

■ IMPORTANT

Maintain the high level for at least 1.3 seconds when the SEN signal is turned OFF and then ON, as shown in the figure on the right.

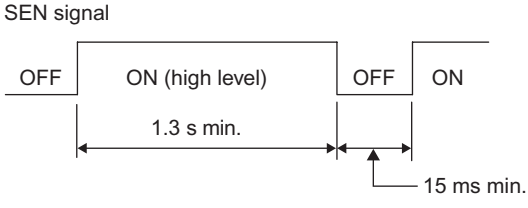

8.4.2 Selecting an Absolute Encoder

An absolute encoder can also be used as an incremental encoder.

Parameter		Meaning
Pn002	n.□**0**□□	Use the absolute encoder as an absolute encoder. (Factory setting)
	n.□**1**□□	Use the absolute encoder as an incremental encoder.
• The SEN signal and back-up battery are not required when using the absolute encoder as an incremental encoder. • After changing these parameters, turn OFF the main circuit and control power supplies and then turn them ON again to enable the new settings.		

8.4.3 Handling Batteries

In order for the absolute encoder to retain position data when the power is turned OFF, the data must be backed up by a battery.

⃠ PROHIBITED

- Install the battery at either the host controller or the SERVOPACK.
  It is dangerous to install batteries at both simultaneously, because that sets up a loop circuit between the batteries.

Battery Installation Location	Yaskawa Model*		Manufacturer Model	Specifications	Manufacturer
Host controller	–		ER6VC3	Lithium battery 3.6 V 2000mAh	Toshiba Battery Co., Ltd.
SERVOPACK	30 W to 5.0 kW	JZSP-BA01	ER3V	Lithium battery 3.6 V 1000mAh	Toshiba Battery Co., Ltd.
	6.0 to 15.0 kW	JZSP-BA01-1			

* For Yaskawa model, a connector is included with a battery.

(1) Battery Provided for SERVOPACK

Install the battery with the following model due to the SERVOPACK capacity.

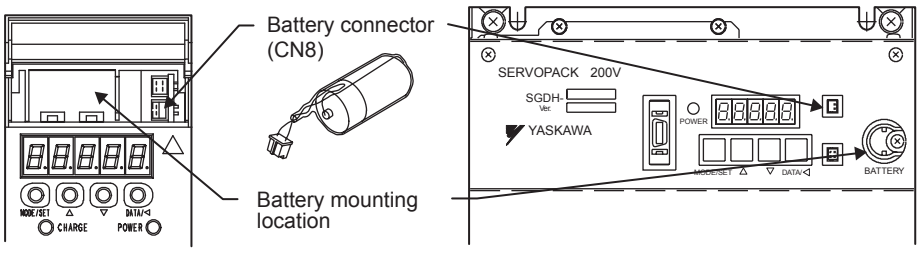

For 30 W to 5.0 kW SERVOPACK □
Battery model: JUSP-BA01

For 6.0 to 15.0 kW SERVOPACK □
Battery model: JUSP-BA01-1

(2) Installing the Battery at the Host Controller

Prepare the battery according to the specifications of the host controller. Use the battery with the model number ER6VC3 (3.6 V, 2000 mAh made by Toshiba Battery Co., Ltd.) or equivalent

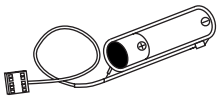

8.4.4 Replacing Batteries

The SERVOPACK will generate an absolute encoder battery alarm (A.83) when the battery voltage drops below about 2.7 V. This alarm is output, however, only when the SERVOPACK power is turned ON. If the voltage drops while the SERVOPACK power is ON, the SERVOPACK will not generate the alarm.

This alarm can be changed to an absolute encoder battery warning (A.93) by setting the parameter.

- Battery Replacement Procedure

1. Replace the battery with only the SERVOPACK control power supply turned ON.
2. After replacing the battery, turn OFF the SERVOPACK power to cancel the absolute encoder battery alarm (A.83).
3. Turn ON the SERVOPACK power back again. If it operates without any problems, the battery replacement has been completed.

IMPORTANT

If the SERVOPACK control power supply is turned OFF and the battery is disconnected (which includes disconnecting the encoder cable), **the absolute encoder data will be deleted**. The absolute encoder must be setup again. Refer to *8.4.5 Absolute Encoder Setup (Fn008)*.

8.4.5 Absolute Encoder Setup (Fn008)

Setting up (initializing) the absolute encoder is necessary in the following cases.

- When starting the machine for the first time
- When an encoder backup error alarm (A.81) is generated
- When an encoder checksum error alarm (A.82) is generated
- To set the absolute encoder multiturn data to 0

Use a built-in type digital operator in the SERVOPACK or a digital operator for setup.

IMPORTANT

1. Encoder setup operation is only possible when the servo is OFF.
2. If the following absolute encoder alarms are displayed, cancel the alarm by using the same method as the setup (initializing). They cannot be canceled with the SERVOPACK alarm reset input signal (/ALM-RST).
   - Encoder backup error alarm (A.81)
   - Encoder checksum error alarm (A.82)

   Any other alarms that monitor the inside of the encoder should be canceled by turning OFF the power.

Step	Display after Operation	Digital Operator	Panel Operator	Description
1	Alarm generated			
2	Fn000	DSPL/SET (DSPL/SET Key)	MODE/SET (MODE/SET Key)	Press the DSPL/SET or MODE/SET Key to select the utility function mode.
3	Fn008	∧ ∨	▲ ▼	Press the UP or DOWN Key to select parameter Fn008. Note: The digit that can be set will blink.
4	PGCL1	DATA/ENTER (DATA/ENTER Key)	DATA/◀ (DATA/SHIFT Key) (Press at least 1 s.)	Press the DATA/ENTER Key once, or DATA/SHIFT Key for more than one second. The display will be as shown at the left.
5	PGCL5	∧ ∨	▲ ▼	Continue pressing the UP Key until PGCL5 is displayed. Note: If there is a mistake in the key operation, “nO_OP” will blink for about one second. The panel operator or digital operator will return to the utility function mode.
6	donE	DSPL/SET (DSPL/SET Key)	MODE/SET (MODE/SET Key)	Press the DSPL/SET or MODE/SET Key. This will clear the multiturn data of the absolute encoder. When completed, “donE” will blink for about one second.
7	PGCL5	About one second later		After “donE” is displayed, “PGCL5” will be displayed again.
8	Fn008	DATA/ENTER (DATA/ENTER Key)	DATA/◀ (DATA/SHIFT Key) (Press at least 1 s.)	Press the DATA/ENTER Key once, or DATA/SHIFT Key for more than one second to return to the Fn008 display of the utility function mode.
9	Turn OFF the power, and then turn it ON again to make the setting valid.			

8.4.6 Absolute Encoder Reception Sequence

The sequence in which the SERVOPACK receives outputs from the absolute encoder and transmits them to host controller is shown below.

(1) Outline of Absolute Signals

The serial data, pulses, etc., of the absolute encoder that are output from the SERVOPACK are output from the PAO, PBO, and PCO signals as shown below.

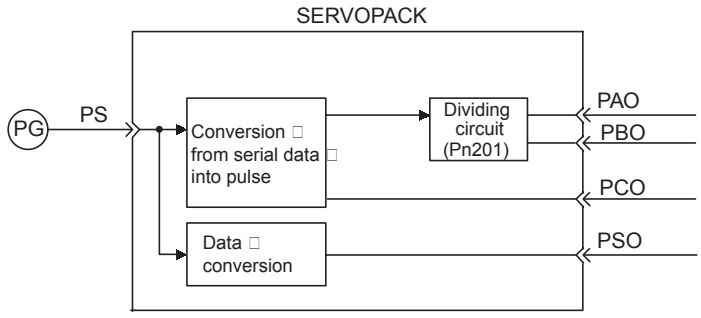

Signal Name	Status	Meaning
PAO	At initial status	Serial data Initial incremental pulse
	At normal status	Incremental pulse
PBO	At initial status	Initial incremental pulse
	At normal status	Incremental pulse
PCO	Always	Zero point pulse
PSO	Always	Rotation count serial data

(2) Absolute Encoder Transmission Sequence and Contents

1. Set the SEN signal at high level.
2. After 100 ms, set the system to serial data reception-waiting-state. Clear the incremental pulse up/down counter to zero.
3. Receive eight bytes of serial data.
4. The system enters a normal incremental operation state about 25 ms after the last serial data is received.

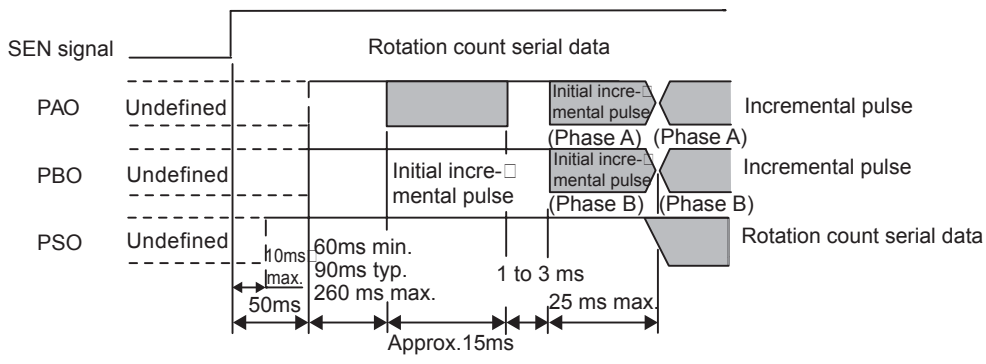

- Serial data: Indicates how many turns the motor shaft has made from the reference position (position specified at setup).
- Initial incremental pulse: Outputs pulses at the same pulse rate as when the motor shaft rotates from the origin to the current position at about 1250 min^{-1} (for 17 bits when the dividing pulse is at the factory setting).

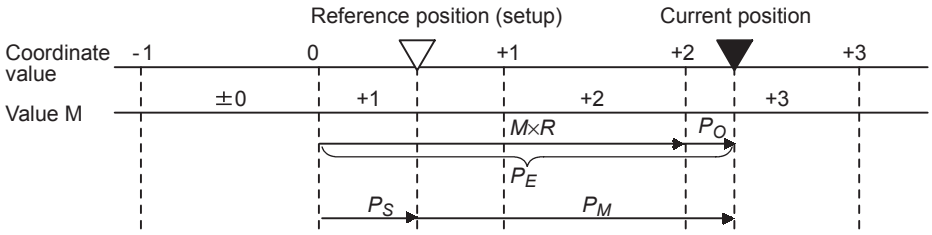

Final absolute data P_M is calculated by following formula.

$$P_E = M \times R + P_O$$
$$P_M = P_E - P_S$$

Use the following for reverse rotation mode (Pn000.0 = 1).

$$P_E = -M \times R + P_O$$
$$P_M = P_E - P_S$$

P_E	Current value read by encoder
M	Multiturn data (rotation count data)
P_O	Number of initial incremental pulses
P_S	Number of initial incremental pulses read at setup (This is saved and controlled by the host controller.)
P_M	Current value required for the user's system
R	Number of pulses per encoder revolution (pulse count after dividing, value of Pn201)

(3) Detailed Signal Specifications

(a) PAO Serial Data Specifications

The number of revolutions is output in five digits.

Data Transfer Method	Start-stop Synchronization (ASYNC)
Baud rate	9600 bps
Start bits	1 bit
Stop bits	1 bit
Parity	Even
Character code	ASCII 7-bit code
Data format	8 characters, as shown below.

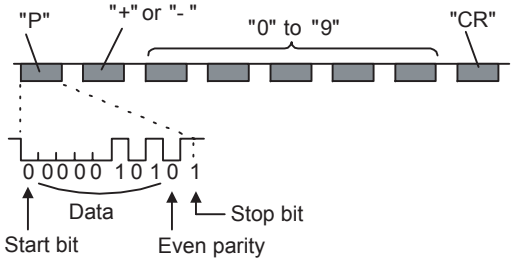

Note: 1. Data is "P+00000" (CR) or "P-00000" (CR) when the number of revolutions is zero.
2. The revolution range is "+32767" to "-32768." When this range is exceeded, the data changes from "+32767" to "-32678" or from "-32678" to "+32767." When changing multiturn limit, the range changes. For details, refer to *8.4.7 Multiturn Limit Setting*.

(b) PSO Serial Data Specifications

The number of revolutions is always output in five digits and seven digits (absolute position within one revolution).

Data Transfer Method	Start-stop Synchronization (ASYNC)
Baud rate	9600 bps
Start bits	1 bit
Stop bits	1 bit
Parity	Even
Character code	ASCII 7-bit code
Data format	13 characters, as shown below.

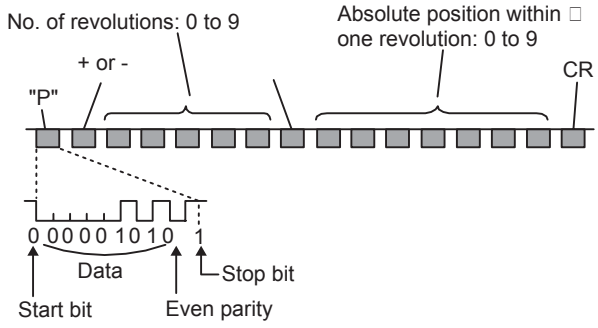

Note: 1. The absolute position data within one revolution is the value before divided.
2. The absolute position data increases during forward rotation. (The reverse rotation mode is invalid.)

(c) Incremental Pulses and Zero-Point Pulses

Just as with normal incremental pulses, initial incremental pulses which provide absolute data are first divided by the frequency divider inside the SERVOPACK and then output.

For details, refer to *8.5.7 Encoder Signal Output.*

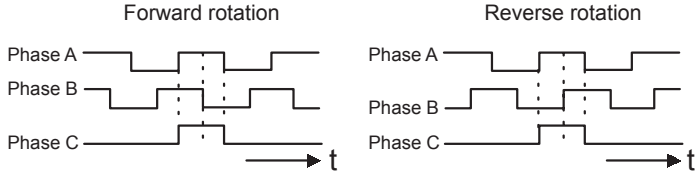

(4) Transferring Alarm Contents

When an absolute encoder is used, SEN signals can be utilized to transfer the alarm detection contents from PAO outputs to the host controller as serial data.
For alarm list, refer to *10.1.1 Alarm Display Table.*

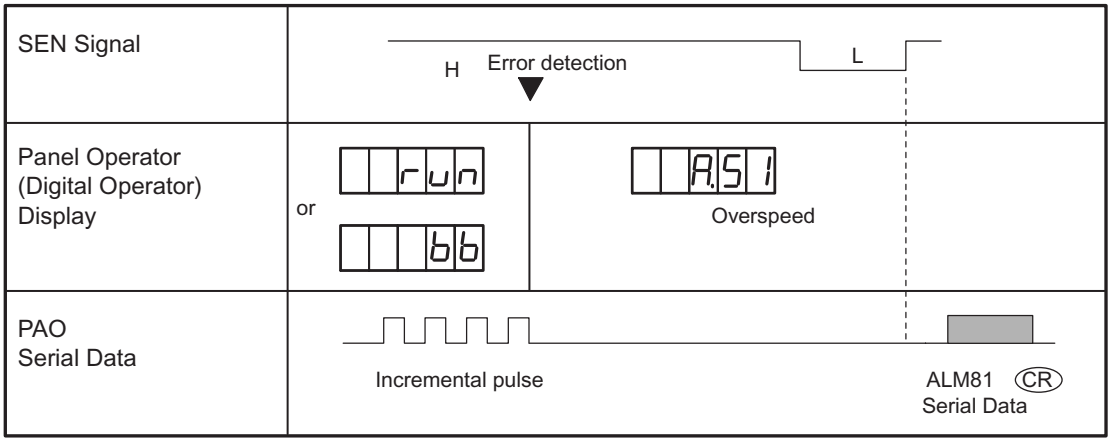

8.4.7 Multiturn Limit Setting

⚠ WARNING

- The multiturn limit value must be changed only for special applications. Changing it inappropriately or unintentionally can be dangerous.
- If the Multiturn Limit Disagreement alarm (A.CC) occurs, check the setting of parameter Pn205 to be sure that it is correct.

  If Fn013 is executed when an incorrect value is set in Pn205, an incorrect value will be set in the encoder. The alarm will disappear even if an incorrect value is set, but incorrect positions will be detected, resulting a dangerous situation where the machine will move to unexpected positions and machine break and personal accident will occur.

The parameter for the multiturn limit setting sets the upper limit for the multiturn data from the encoder into Pn002 = n□0□□ when using an absolute encoder. When the rotation amount exceeds this setting, the encoder rotation amount returns to 0.

Pn205	Multiturn Limit Setting		Speed / Position / Torque	
	Setting Range	Setting Unit	Factory Setting	Setting Validation
	0 to 65535	Rev	65535	After restart

This parameter is valid when Pn002 = n□0□□ (when the absolute encoder is used).

The range of the multiturn data will vary when this parameter is set to anything other than the factory setting.

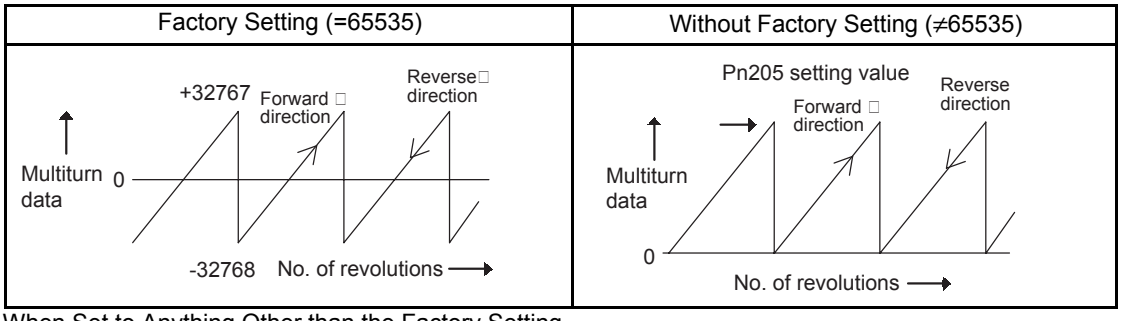

■ When Set to Anything Other than the Factory Setting (≠65535)

When the motor rotates in the reverse direction with the multiturn data at 0, the multiturn data will change to the setting of Pn205.

When the motor rotates in the forward direction with the multiturn data at the Pn205 setting, the multiturn data will change to 0.

Set the Pn205 to (the desired multiturn data -1).

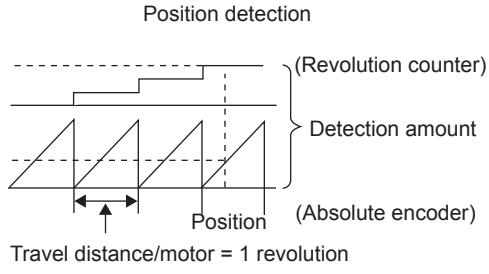

- Encoder Multiturn Limit Disagreement

If the Pn205 value is changed from the factory setting and the power is turned OFF then ON, an alarm will be displayed.

Alarm Display	Alarm Name	Alarm Code Outputs			Meaning
		ALO1	ALO2	ALO3	
A.CC	Multiturn Limit Disagreement	ON (L)	OFF (H)	ON (L)	Different multiturn limits have been set in the encoder and SERVOPACK.

8.4.8 Multiturn Limit Setting When Multiturn Limit Disagreement (A.CC) Occurred

Perform the following operation using the digital operator or panel operator.

This operation can only be done when the A.CC alarm is generated.

Step	Display after Operation	Digital Operator	Panel Operator	Description
1	Fn000	DSPL/SET (DSPL/SET Key)	MODE/SET (MODE/SET Key)	Press the DSPL/SET or MODE/SET Key to select the utility function mode.
2	Fn013			Press the LEFT/RIGHT or UP/DOWN Key or the UP or DOWN Key to set the parameter Fn013. *The digit that can be set will blink.
3	PGSEt	DATA/ENTER (DATA/ENTER Key)	DATA/◀ (DATA/SHIFT Key) (Press at least 1 s.)	Press the DATA/ENTER Key once, or DATA/SHIFT Key for more than one second. The display on the left will appear.
4	donE	DSPL/SET (DSPL/SET Key)	MODE/SET (MODE/SET Key)	Press the DSPL/SET or MODE/SET Key. The multiturn limit setting in the absolute encoder will be changed. When the setting is completed, “donE” will blink for about one second.
5	PGSEt	About one second later		After “donE” is displayed, “PGSEt” will be displayed again.
6	Fn013	DATA/ENTER (DATA/ENTER Key)	DATA/◀ (DATA/SHIFT Key) (Press at least 1 s.)	Press the DATA/ENTER Key once, or DATA/SHIFT Key for more than one second to return to the Fn013 display of the utility function mode.
7	Turn OFF the power, and then turn it ON again to make the setting valid.			

8.5 Operating Using Speed Control with Analog Reference

8.5.1 Setting Parameters

Parameter		Description
Pn000	n.□□**0**□	Control mode selection: Speed control (analog reference) (factory setting)

Pn300	Speed Reference Input Gain			Speed Position Torque
	Setting Range	Setting Unit	Factory Setting	Setting Validation
	1.50 to 3000 (150 to 30.00 V/Rated speed)	0.01 V/Rated speed	600	Immediately

Sets the analog voltage level for the speed reference (V-REF) necessary to operate the servomotor at the rated speed.

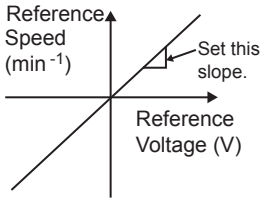

■ EXAMPLE

Pn300=600: 6-V input is equivalent to the rated speed of the servomotor (factory setting).

Pn300=1000: 10-V input is equivalent to the rated speed of the servomotor.

Pn300=200: 2-V input is equivalent to the rated speed of the servomotor.

8.5.2 Setting Input Signals

(1) Speed Reference Input

Input the speed reference to the SERVOPACK using the analog voltage reference to control the servomotor speed in proportion to the input voltage.

Type	Signal Name	Connector Pin Number	Name
Input	V-REF	CN1-5	Speed Reference Input
	SG	CN1-6	Signal Ground for Speed Reference Input

The above inputs are used for speed control (analog voltage reference). (Pn000.1 = 0, 4, 7, 9, or A)

Pn300 is used to set the speed reference input gain. Refer to *8.5.1 Setting Parameters*.

■ Input Specifications

- Input range: ±2 VDC to ±10 VDC/rated speed
- Maximum allowable input voltage: ±12 VDC

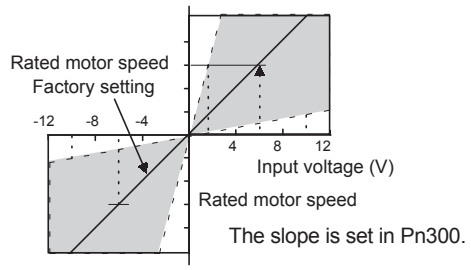

- Setting Example

  Pn300 = 600: Rated speed at ±6 V

  Actual examples are shown below.

Speed Reference Input	Rotation Direction	Motor Speed	SGMAH Servomotor
+6 V	Forward	Rated motor speed	3000 min^{-1}
+1 V	Forward	(1/6) rated motor speed	500 min^{-1}
-3 V	Reverse	(1/2) rated motor speed	1500 min^{-1}

Parameter Pn300 can be used to change the voltage input range.

■ Input Circuit Example

- Always use twisted-pair wire to control noise.
- Recommended variable resistor: Model 25HP-10B manufactured by Sakae Tsushin Kogyo Co., Ltd.

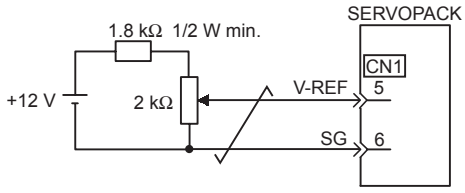

Connect V-REF and SG to the speed reference output terminals on the host controller when using a host controller, such as a programmable controller, for position control.

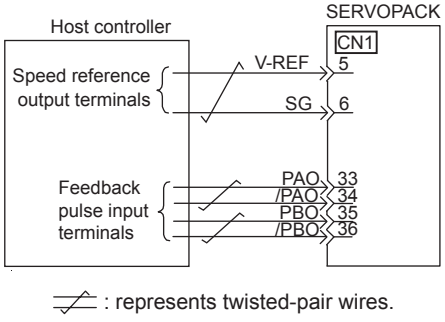

(2) Proportional Control Reference (/P-CON)

Type	Signal Name	Connector Pin Number	Setting	Description
Input	/P-CON	CN1-41	ON (low level)	Operates the SERVOPACK with proportional control.
			OFF (high level)	Operates the SERVOPACK with proportional integral control.

/P-CON signal selects either the PI (proportional integral) or P (proportional) Speed Control Mode.

Switching to P control reduces servomotor rotation and minute vibrations due to speed reference input drift.

Input reference: At 0 V, the servomotor rotation due to drift will be reduced, but servomotor rigidity (holding force) drops when the servomotor is stopped.

Note: A parameter can be used to reallocate the input connector number for the /P-CON signal. Refer to *7.3.2 Input Circuit Signal Allocation*.

8.5.3 Adjusting Offset

When using the speed control, the servomotor may rotate slowly even if 0 V is specified as the analog voltage reference. This happens if the host controller or external circuit has a slight offset (in the units of mV) in the reference voltage. Adjustments can be done manually or automatically by using the panel operator or digital operator. Refer to *7.2 Operation in Utility Function Mode (Fn□□□)*.

The automatic adjustment of the analog (speed, torque) reference offset (Fn009) automatically measures the amount of the offset and adjusts the reference voltage.

The SERVOPACK automatically adjusts the offset when the host controller or external circuit has the offset in the reference voltage.

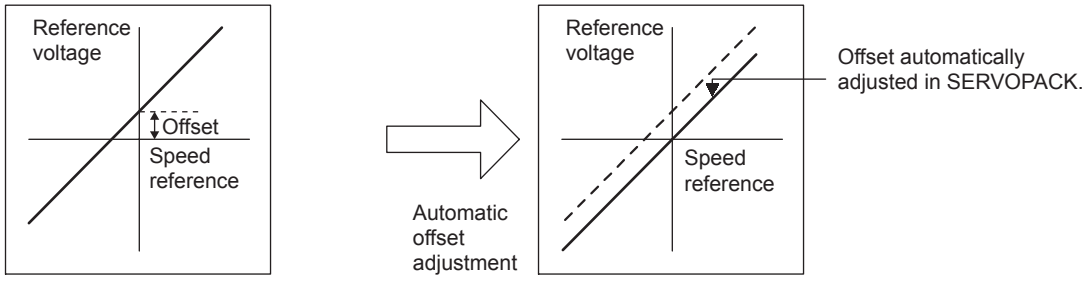

After completion of the automatic adjustment, the amount of offset is stored in the SERVOPACK. The amount of offset can be checked in the speed reference offset manual adjustment mode (Fn00A). Refer to *8.5.3 (2) Manual Adjustment of the Speed Reference Offset*.

(1) Automatic Adjustment of the Speed Reference Offset

The automatic adjustment of reference offset (Fn009) cannot be used when a position loop has been formed with a host controller and the error pulse is changed to zero at the servomotor stop due to servolock. Use the speed reference offset manual adjustment (Fn00A) described in the next section for a position loop.

The zero-clamp speed control function can be used to force the motor to stop while the zero speed reference is given. Refer to *8.5.6 Using the Zero Clamp Function*.

IMPORTANT The speed reference offset must be automatically adjusted with the servo OFF.

Adjust the speed reference offset automatically in the following procedure.

Step	Display after Operation	Digital Operator	Panel Operator	Description
1	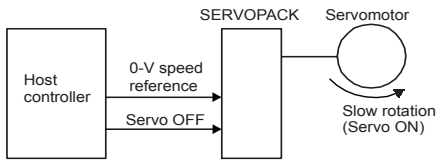			Turn OFF the SERVOPACK, and input the 0-V reference voltage from the host controller or external circuit.
2	Fn000	DSPL/SET (DSPL/SET Key)	MODE/SET (MODE/SET Key)	Press the DSPL/SET or MODE/SET Key to select the utility function mode.
3	Fn009			Press the LEFT/RIGHT or UP/DOWN Key, or UP or DOWN Key to select parameter Fn009. *The digit that can be set will blink.
4	rEF_o	DATA/ENTER (DATA/ENTER Key)	DATA/◀ (DATA/SHIFT Key) (Press at least 1 s.)	Press the DATA/ENTER Key once, or DATA/SHIFT Key for more than one second. “rEF_o” will be displayed.
5	donE	DSPL/SET (DSPL/SET Key)	MODE/SET (MODE/SET Key)	Press the DSPL/SET or MODE/SET Key. The reference offset will be automatically adjusted. When completed, “donE” will blink for about one second.
6	rEF_o	About one second later		After “donE” is displayed, “rEF_o” will be displayed again.
7	Fn009	DATA/ENTER (DATA/ENTER Key)	DATA/◀ (DATA/SHIFT Key) (Press at least 1 s.)	Press the DATA/ENTER Key once, or DATA/SHIFT Key for more than one second to return to the Fn009 display of the utility function mode.

8

(2) Manual Adjustment of the Speed Reference Offset

Use the speed reference offset manual adjustment (Fn00A) in the following situations:

- If a loop is formed with the host controller and the position error pulse is to be zero when servolock is stopped.
- To deliberately set the offset to some value.
- To check the offset data set in the speed reference offset automatic adjustment mode.

This function operates in the same way as the reference offset automatic adjustment mode (Fn009), except that the amount of offset is directly input during the adjustment.

The offset setting range and setting units are as follows:

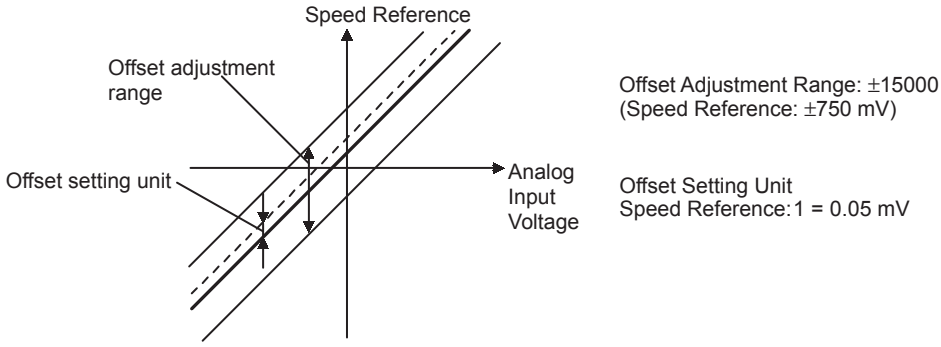

Adjust the speed reference offset manually in the following procedure.

Step	Display after Operation	Digital Operator	Panel Operator	Description
1	Fn000	DSPL/SET (DSPL/SET Key)	MODE/SET (MODE/SET Key)	Press the DSPL/SET or MODE/SET Key to select the utility function mode.
2	Fn00A	∧ ∨	▲ ▼	Press the UP or DOWN Key to select parameter Fn00A. *The digit that can be set will blink.
3	-.SPd	DATA/ENTER (DATA/ENTER Key)	DATA/◀ (DATA/SHIFT Key) (Press at least 1 s.)	Press the DATA/ENTER Key once, or DATA/SHIFT Key for more than one second. The display will be as shown at the left. The manual adjustment mode for the speed reference offset will be entered.
4	-.SPd	Servo ON		Turn ON the servo ON (/S-ON) signal. The display will be as shown at the left.
5	0000	< >	DATA/◀ (DATA/SHIFT Key) (Less than 1 s.)	Press the LEFT or RIGHT Key or DATA/SHIFT Key for less than one second to display the speed reference offset amount.
6		∧ ∨	▲ ▼	Press the UP or DOWN Key to adjust the amount of offset.
7	.SPd	< >	MODE/SET□ (MODE/SET Key) (Less than 1 s.)	Press the LEFT or RIGHT Key or MODE/SET Key for less than one second. The display will appear momentarily as shown at the left, and “donE” will blink and the offset will be set. After the setting is completed, the display will return to the display as shown at the left.
8	Fn00A	DATA/ENTER (DATA/ENTER Key)	DATA/◀ (DATA/SHIFT Key) (Press at least 1 s.)	Press the DATA/ENTER Key once, or DATA/SHIFT Key for more than one second to return to the Fn00A display of the utility function mode.

8.5.4 Soft Start

The soft start function converts the stepwise speed reference inside the SERVOPACK to a consistent rate of acceleration and deceleration.

Pn305	Soft Start Acceleration Time		Speed	
	Setting Range	Setting Unit	Factory Setting	Setting Validation
	0 to 10000	ms	0	Immediately

Pn306	Soft Start Deceleration Time		Speed	
	Setting Range	Setting Unit	Factory Setting	Setting Validation
	0 to 10000	ms	0	Immediately

The soft start function enables smooth speed control when inputting a stepwise speed reference or when selecting internally set speeds. Set both Pn305 and Pn306 to “0” for normal speed control.

Set these parameters as follows:

- Pn305: The time interval from the time the motor starts until the motor maximum speed is reached.
- Pn306: The time interval from the time the motor is operating at the motor maximum speed until it stops.

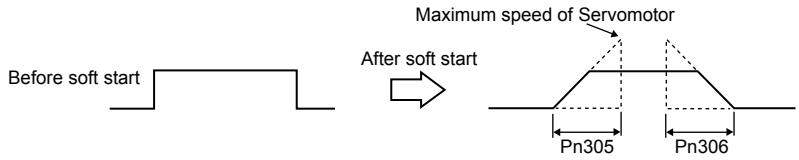

8.5.5 Speed Reference Filter

Pn307	Speed Reference Filter Time Constant		Speed	
	Setting Range	Setting Unit	Factory Setting	Setting Validation
	0 to 65535	0.01 ms	40	Immediately

This smoothens the speed reference by applying a 1st-order delay filter to the analog speed reference (V-REF) input. A value that is too large, however, will slow down response.

8.5.6 Using the Zero Clamp Function

(1) Zero Clamp Function

The zero clamp function is used for systems where the host controller does not form a position loop for the speed reference input. When the zero clamp signal (/ZCLAMP) is ON, a position loop is formed inside the SERVOPACK as soon as the input voltage of the speed reference (V-REF) drops below the motor speed level in the zero clamp level (Pn501). The servomotor ignores the speed reference and then quickly stops and locks the servomotor.

The servomotor is clamped within ±1 pulse of when the zero clamp function is turned ON, and will still return to the zero clamp position even if it is forcibly rotated by external force.

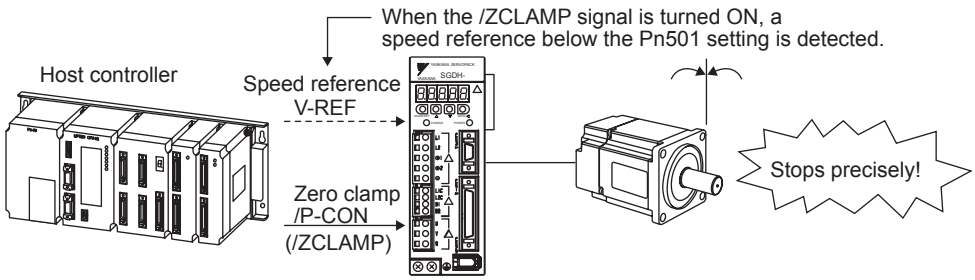

(2) Parameter Setting

Parameter		Meaning
Pn000	n.□□**A**□	Control mode selection: Speed control (analog voltage reference) ⇔ Zero clamp

Zero Clamp Conditions

Zero clamp is performed with Pn000 = n.□□A□ when the following two conditions are satisfied:

- /P-CON (/ZCLAMP) is ON (low level).
- Speed reference (V-REF) drops below the setting of Pn501.

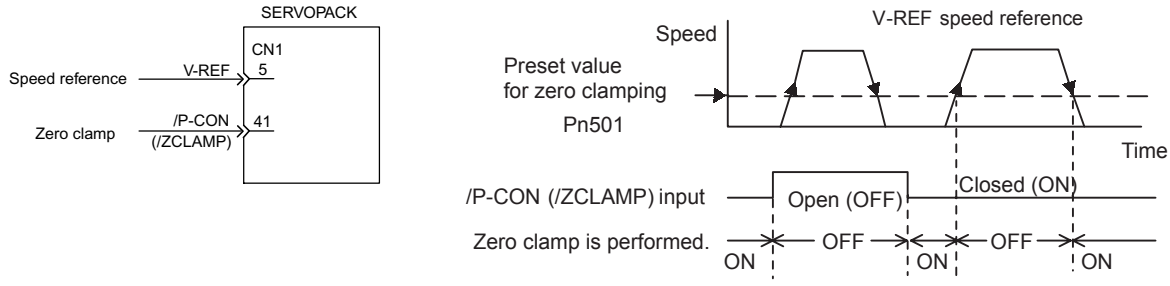

Pn501	Zero Clamp Level			Speed
	Setting Range	Setting Unit	Factory Setting	Setting Validation
	0 to 10000	min^{-1}	10	Immediately

Sets the motor speed at which the zero clamp is performed if zero clamp speed control (Pn000 = n.□□A□) is selected. Even if this value is set higher than the maximum speed of the servomotor, the maximum speed will be used.

(3) Input Signal Setting

Type	Signal Name	Connector Pin Number	Setting	Meaning
Input	/P-CON	CN1-41	ON (low level)	Zero clamp function ON (enabled)
			OFF (high level)	Zero clamp function OFF (disabled)
	/ZCLAMP	Must be allocated	ON (low level)	Zero clamp function ON (enabled)
			OFF (high level)	Zero clamp function OFF (disabled)

This is the input signal for the zero clamp operation.

Either /P-CON or /ZCLAMP can be used to switch the zero clamp.

To use the /ZCLAMP signal, an input signal must be allocated. Refer to *7.3.2 Input Circuit Signal Allocation* for more details.

■ IMPORTANT

When the /ZCLAMP signal is allocated, the zero clamp operation will be used even for speed control Pn000 = n.□□0□.

8.5.7 Encoder Signal Output

Encoder feedback pulses processed inside the SERVOPACK can be output externally.

Type	Signal Name	Connector Pin Number	Name
Output	PAO	CN1-33	Encoder output phase A
	/PAO	CN1-34	Encoder output phase /A
Output	PBO	CN1-35	Encoder output phase B
	/PBO	CN1-36	Encoder output phase /B
Output	PCO	CN1-19	Encoder output phase C (zero-point pulse)
	/PCO	CN1-20	Encoder output phase /C (zero-point pulse)

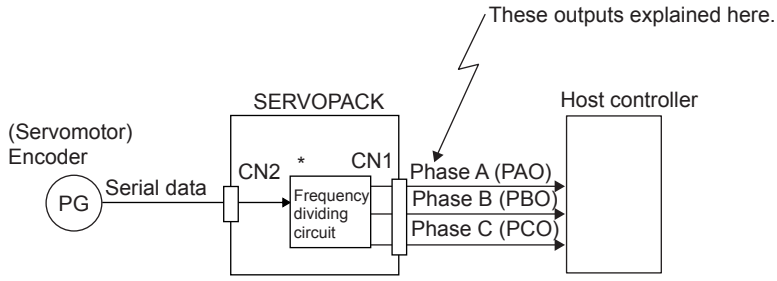

* Even in reverse rotation mode (Pn000.0 = 1), the dividing output phase form is the same as that for the standard setting (Pn000.0 = 0).

■ Output Phase Form

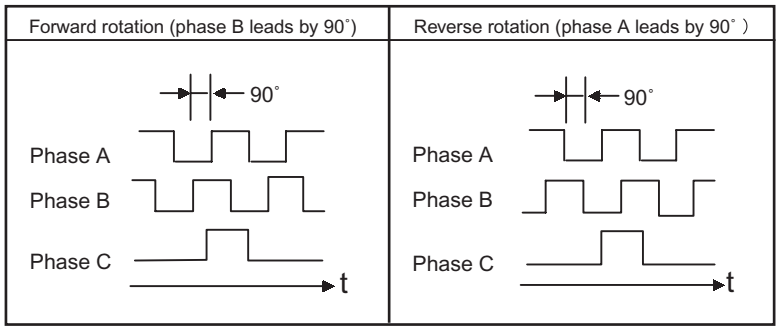

The following signals are added when using an absolute encoder.

Type	Signal Name	Connector Pin Number	Name
Input	SEN	CN1-4	SEN Signal Input
	SG	CN1-2	Signal Ground
	BAT (+)	CN1-21	Battery (+)
	BAT (-)	CN1-22	Battery (-)
Output	SG*	CN1-1	Signal Ground

* SG (CN1-1, 2): Connect to 0 V on the host controller.

TERMS

Dividing

The dividing means that the divider converts data into the pulse density based on the pulse data of the encoder installed on the servomotor, and outputs it. The setting unit is the number of pulses/revolution.

IMPORTANT

If using the SERVOPACK's phase-C pulse output for a zero point return, rotate the servomotor twice or more before starting a zero point return. If the configuration prevents the servomotor from rotating the servomotor or more, perform a zero point return at a motor speed of 600 min^{-1} or below. If the motor speed is faster than 600 min^{-1}, the phase-C pulse output may not be output correctly.

- Pulse Dividing Ratio Setting

Pn201	PG Divider			Speed Position Torque
	Setting Range	Setting Unit	Factory Setting	Setting Validation
	16 to 16384	P/Rev	16384	After restart

Set the number of pulses for PG output signals (PAO, /PAO, PBO, /PBO) externally from the SERVOPACK.
Feedback pulses from the encoder per revolution are divided inside the SERVOPACK by the number set in Pn201 before being output. (Set according to the system specifications of the machine or host controller.)
The setting range varies with the number of encoder pulses for the servomotor used.

Motor Model Encoder Specifications	Resolution (Bit)	No. of Pulses (P/R)	Setting Range
A	13	2048	16 to 2048
B, 1	16	16384	16 to 16384
C, 1	17	32768	

■ Output Example

Pn201=16 (when 16 pulses are output per revolution)

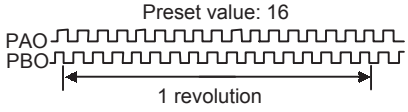

8.5.8 Speed Coincidence Output

The speed coincidence (/V-CMP) output signal is output when the actual motor speed during speed control is the same as the speed reference input. The host controller uses the signal as an interlock.

Type	Signal Name	Connector Pin Number	Setting	Meaning
Output	/V-CMP	CN1-25, 26 (Factory setting)	ON (low level)	Speed coincides.
			OFF (high level)	Speed does not coincide.
This output signal can be allocated to another output terminal with parameter Pn50E. Refer to *7.3.3 Output Circuit Signal Allocation* for details.				

Pn503	Speed Coincidence Signal Output Width		Speed	
	Setting Range	Setting Unit	Factory Setting	Setting Validation
	0 to 100	min^{-1}	10	Immediately

The /V-CMP signal is output when the difference between the speed reference and actual motor speed is the same as the pn503 setting or less.

■ EXAMPLE

The /V-CMP signal turns ON at 1900 to 2100 min^{-1} if the Pn503 parameter is set to 100 and the reference speed is 2000 min^{-1}.

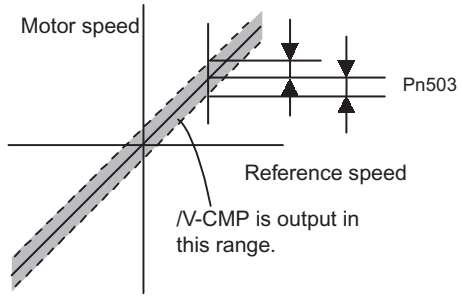

/V-CMP is a speed control output signal. When the factory setting is used and the output terminal allocation is not performed with the Pn50E, this signal is automatically used as the positioning completed signal /COIN for position control, and it is always OFF (high level) for torque control.

8

8.6 Operating Using Position Control

8.6.1 Setting Parameters

Set the following parameters for position control using pulse trains.

(1) Control Mode Selection

Parameter		Meaning
Pn000	n.□□**1**□	Control mode selection: Position control (pulse train reference)

(2) Setting a Reference Pulse Form

Type	Signal Name	Connector Pin Number	Name
Input	PULS	CN1-7	Reference Pulse Input
	/PULS	CN1-8	Reference Pulse Input
	SIGN	CN1-11	Reference Code Input
	/SIGN	CN1-12	Reference Code Input

Set the input form for the SERVOPACK using parameter Pn200.0 according to the host controller specifications.

Parameter		Reference Pulse Form	Input Pulse Multiplier	Forward Rotation Reference	Reverse Rotation Reference
Pn200	n.□□□**0**	Sign + pulse train (Positive logic) (Factory setting)	–	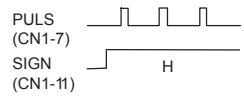	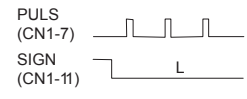
	n.□□□**1**	CW pulse + CCW pulse (Positive logic)	–	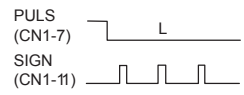	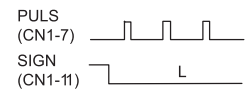
	n.□□□**2**	Two-phase pulse train with 90° phase differential (Positive logic)	×1	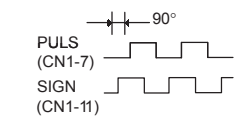	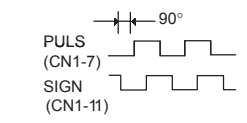
	n.□□□**3**		×2		
	n.□□□**4**		×4		
	n.□□□**5**	Sign + pulse train (Negative logic)	–	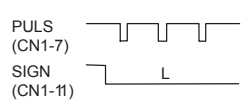	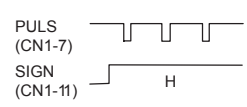
	n.□□□**6**	CW pulse + CCW pulse (Negative logic)	–	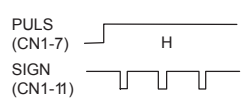	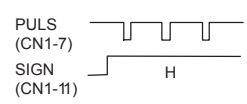
	n.□□□**7**	Two-phase pulse train with 90° phase differential (Negative logic)	×1	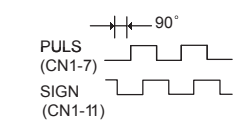	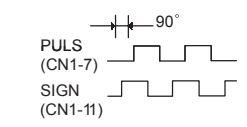
	n.□□□**8**		×2		
	n.□□□**9**		×4		

The input pulse multiplier can be set for the 2-phase pulse train with 90° phase differential reference pulse form.

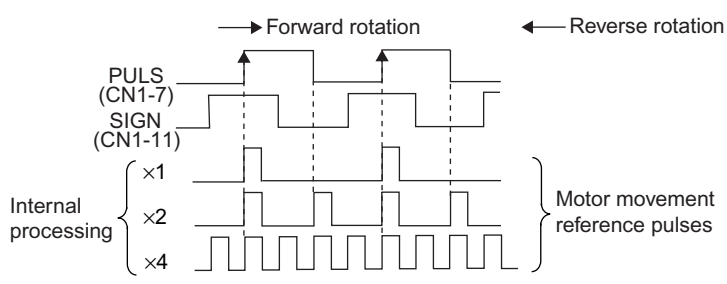

(3) Clear Signal Form Selection

Type	Signal Name	Connector Pin Number	Name
Input	CLR	CN1-15	Clear Input
	/CLR	CN1-14	Clear Input

The internal processing of the SERVOPACK for the clear signal can be set to either of four types by parameter Pn200.1. Select according to the specifications of the machine or host controller.

Parameter		Description	Timing
Pn200	n.□□**0**□	Clears at high level. Position error pulses do not accumulate while the signal is at high level. (Factory setting)	CLR (CN1-15) Clears at high level
	n.□□**1**□	Clears at the rising edge.	CLR (CN1-15) High Clears here just once.
	n.□□**2**□	Clears at low level. Position error pulses do not accumulate while the signal is at low level.	CLR (CN1-15) Clears at low level
	n.□□**3**□	Clears at the falling edge.	CLR (CN1-15) Low Clears here just once.

The following are executed when the clear operation is enabled.
- The SERVOPACK error counter is set to 0.
- Position loop operation is disabled.
  → Holding the clear status may cause the servo clamp to stop functioning and the servomotor to rotate slowly due to drift in the speed loop.

When the clear signal (CLR) is not wired, the signal is always at low level (does not clear).

When the clear signal (CLR) is not used and CN1-14, 15 are not wired, the CLR input terminals (CN1-14, 15) are always at high level. The SERVOPACK is Pn200.1 factory set to clear position error pulse at high level. Even if a pulse train reference is input with the setting in this state, the pulses will be constantly cleared and the motor will not operate. Set the parameter to a value other than Pn200 = n.□□0□, or short-circuit CN1-14, 15.

(4) Clear Operation Selection

This parameter determines when the error pulse should be cleared according to the condition of the SERVOPACK, in addition to the clearing operation of the clear signal (/CLR). Either of three clearing modes can be selected with Pn200.2

Parameter		Description
Pn200	n.□**0**□□	Clear the error pulse at the /CLR signal input during the baseblock. (Factory setting) "During the baseblock" means when the SVON signal or the main circuit power supply is OFF, or an alarm occurs.
	n.□**1**□□	Do not clear the error pulse. Clear only with the /CLR signal.
	n.□**2**□□	Clear the error pulse when an alarm occurs or the /CLR signal is input.

8.6.2 Setting the Electronic Gear

(1) Number of Encoder Pulses

SGM□H-□□□□□□□ (Servomotor serial number)

Motor Model Encoder Specifications	Encoder Type	No. of Encoder Pulses	
A	Incremental encoder	13 bits	2048
B		16 bits	16384
C		17 bits	32768
1	Absolute encoder	16 bits	16384
2		17 bits	32768

Note: For details on reading servomotor model numbers, refer to *2.1 Servomotor Model Designations*.

INFO

The number of bits representing the resolution of the applicable encoder is not the same as the number of encoder signal pulses (phases A and B). The number of bits representing the resolution is equal to the number of encoder pulses × 4 (multiplier).

(2) Electronic Gear

The electronic gear enables the workpiece travel distance per input reference pulse from the host controller to be set to any value. One reference pulse from the host controller, i.e., the minimum position data unit, is called a reference unit.

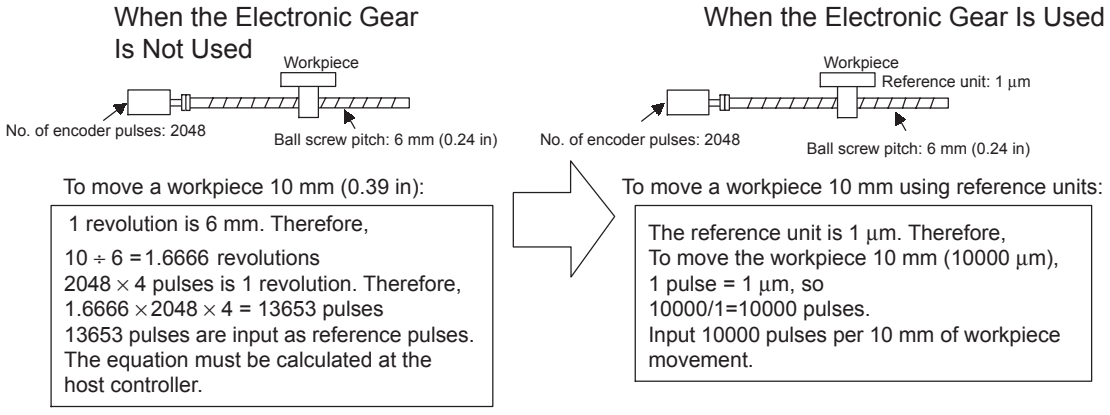

(3) Related Parameters

Pn202	Electronic Gear Ratio (Numerator)			Position
	Setting Range	Setting Unit	Factory Setting	Setting Validation
	1 to 65535	–	4	After restart

Pn203	Electronic Gear Ratio (Denominator)			Position
	Setting Range	Setting Unit	Factory Setting	Setting Validation
	1 to 65535	–	1	After restart

If the deceleration ratio of the servomotor and the load shaft is given as n/m where m is the rotation of the servomotor and n is the rotation of the load shaft,

$$\text{Electronic gear ratio: } \frac{B}{A} = \frac{Pn202}{Pn203} = \frac{\text{No. of encoder pulses} \times 4}{\text{Travel distance per load shaft revolution (reference units)}} \times \frac{m}{n}$$

* If the ratio is outside the setting range, reduce the fraction (both numerator and denominator) until you obtain integers within the range. Be careful not to change the electronic gear ratio (B/A).

■ IMPORTANT

Electronic gear ratio setting range: 0.01 ≤ Electronic gear ratio (B/A) ≤ 100

If the electronic gear ratio is outside this range, the SERVOPACK will not operate properly. In this case, modify the load configuration or reference unit.

(4) Procedure for Setting the Electronic Gear Ratio

Use the following procedure to set the electronic gear ratio.

Step	Operation	Description
1	Check machine specifications.	Check the deceleration ratio, ball screw pitch, and pulley diameter.
2	Check the number of encoder pulses.	Check the number of encoder pulses for the servomotor used.
3	Determine the reference unit used.	Determine the reference unit from the host controller, considering the machine specifications and positioning accuracy.
4	Calculate the travel distance per load shaft revolution.	Calculate the number of reference units necessary to turn the load shaft one revolution based on the previously determined reference units.
5	Calculate the electronic gear ratio.	Use the electronic gear ratio equation to calculate the ratio (B/A).
6	Set parameters.	Set parameters using the calculated values.

(5) Electronic Gear Ratio Setting Examples

The following examples show electronic gear ratio settings for different load configurations.

Step	Operation	Load Configuration					
		Ball Screw		Disc Table		Belt and Pulley	
		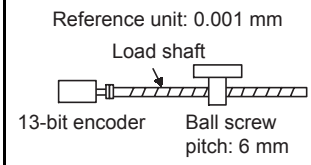		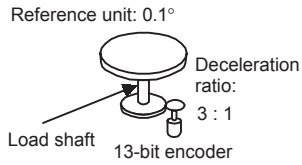		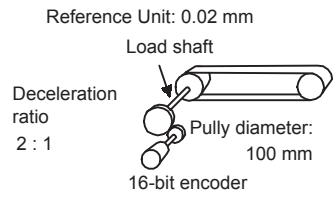	
1	Check machine specifications.	· Ball screw pitch: 6 mm · Deceleration ratio: 1/1		Rotation angle per revolution: 360° Deceleration ratio: 3/1		Pulley diameter: 100 mm (pulley circumference: 314 mm) · Deceleration ratio: 2/1	
2	Check the number of encoder pulses.	13-bit: 2048 P/R		13-bit: 2048 P/R		16-bit: 16384 P/R	
3	Determine the reference unit used.	1 Reference unit: 0.001 mm (1 µm)		1 Reference unit: 0.01°		1 Reference unit: 0.02 mm (20 µm)	
4	Calculate the travel distance per load shaft revolution.	6 mm/0.001 mm=6000		360°/0.1°=3600		314 mm/0.02 mm=15700	
5	Calculate the electronic gear ratio.	$\frac{B}{A}=\frac{2048\times4}{6000}\times\frac{1}{1}$		$\frac{B}{A}=\frac{2048\times4}{3600}\times\frac{3}{1}$		$\frac{B}{A}=\frac{16384\times4}{15700}\times\frac{2}{1}$	
6	Set parameters.	Pn202	8192	Pn202	24576	Pn202	131072*
		Pn203	6000	Pn203	3600	Pn203	15700

Reduce the fraction (both numerator and denominator) since the calculated result will not be within the setting range. For example, reduce the numerator and denominator by four to obtain Pn201=32768, Pn203=3925 and complete the settings.

(6) Electronic Gear Ratio Equation

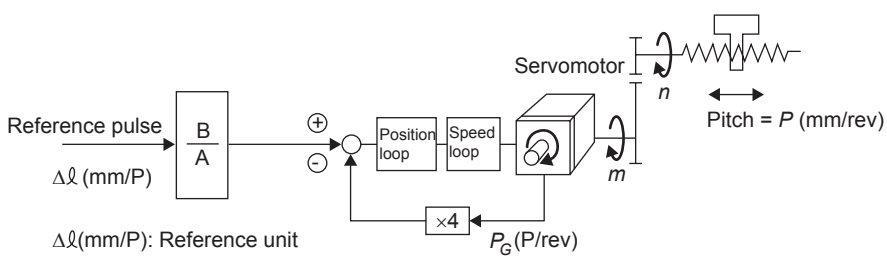

$\Delta\ell$(mm/P): Reference unit
P_G(P/R): Encoder pulses
P (mm/rev): Ball screw pitch
$\frac{m}{n}$: Deceleration ratio

$$\frac{n\times P}{\Delta\ell}\times\left(\frac{B}{A}\right)=4\times P_G\times m$$

$$\left(\frac{B}{A}\right)=\frac{4\times P_G\times m\times\Delta\ell}{n\times P}=\frac{4\times P_G}{\frac{P}{\Delta\ell}\times}\times\frac{m}{n}$$

Set A and B with the following parameters.

A : Pn202 B : Pn203

8.6.3 Position Reference

The servomotor positioning is controlled by inputting a pulse train reference.

The pulse train output form from the host controller corresponds to the following:

- Line-driver Output
- +24V Open-collector output
- +12V Open-collector output
- +5V Open-collector output

IMPORTANT

■Precautions for Open-collector Output

When the open-collector output is used, input signal noise margin lowers. Change the parameter as follows:

Parameter		Description
Pn200	n.1□□□	Reference input filter for open-collector signal

(1) Input/Output Signal Timing Example

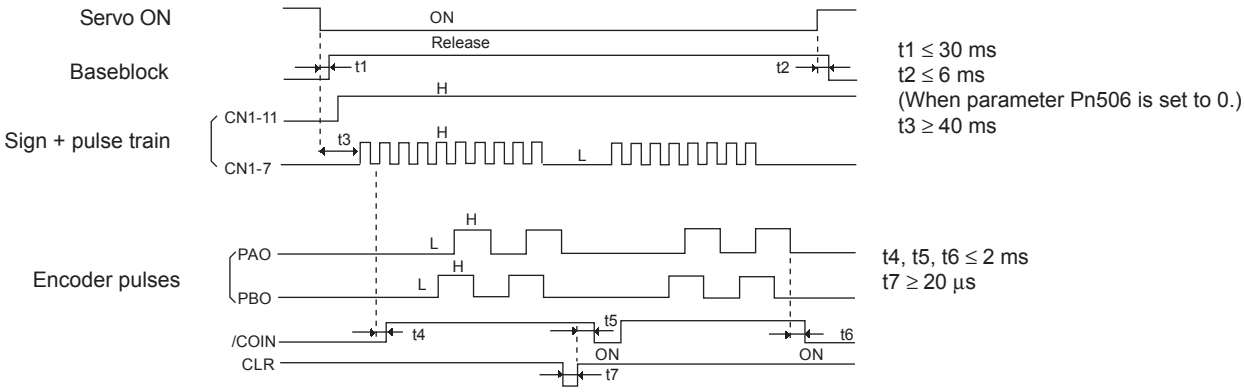

Note: 1. The interval from the time the servo ON signal is turned ON until a reference pulse is input must be at least 40 ms, otherwise the reference pulse may not be received by the SERVOPACK.

2. The error counter clear signal must be ON for at least 20 μs.

8

Table 8.1 Reference Pulse Input Signal Timing

Reference Pulse Signal Form	Electrical Specifications		Remarks
Sign and pulse train input (SIGN and PULS signal) Maximum reference frequency: 500 kpps (For open-collector output: 200 kpps)	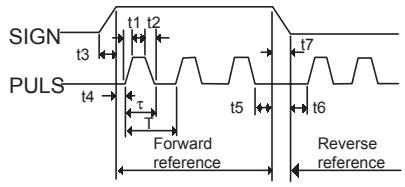	t1, t2 ≤ 0.1 ms t3, t7 ≤ 0.1 ms t4, t5, t6 > 3 μs τ ≥ 1.0 μs (τ/T) × 100 ≤ 50%	Sign (SIGN) H = Forward reference L = Reverse reference
CW pulse and CCW pulse Maximum reference frequency: 500 kpps (For open-collector output: 200 kpps)	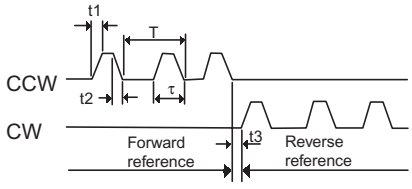	t1, t2 ≤ 0.1 ms t3 > 3 μs τ ≥ 1.0 μs (τ/T) × 100 ≤ 50%	–
Two-phase pulse train with 90° phase differential (phase A and phase B) Maximum reference frequency ×1 input pulse multiplier: 500 kpps ×2 input pulse multiplier: 400 kpps ×4 input pulse multiplier: 200 kpps	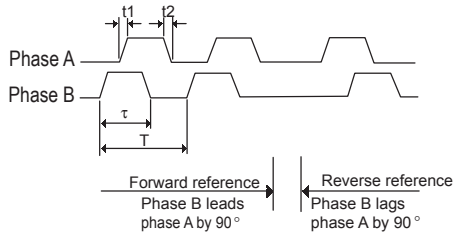	t1, t2 ≤ 0.1 ms τ ≥ 1.0 μs (τ/T) × 100 = 50%	Switching of the input pulse multiplier mode is done with parameter Pn200.0 setting.

(2) Connection Example

(a) Connection Example for Line-driver Output

Applicable line driver: SN75174 manufactured by Texas Instruments Inc., or MC3487 or equivalent

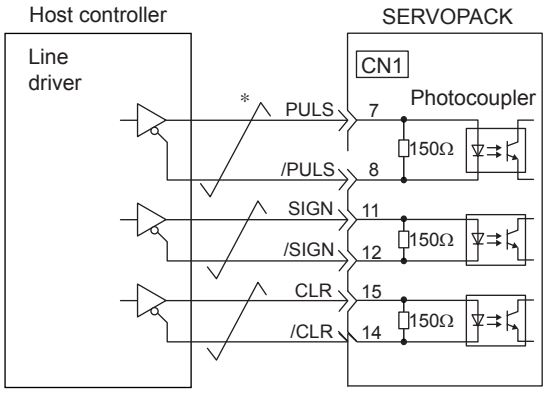

* : Represents twisted-pair wires.

(b) Connection Example for Open-collector Output

Select the limit resistance R1 value so that the input current *i* will be within 7 to 15 mA.

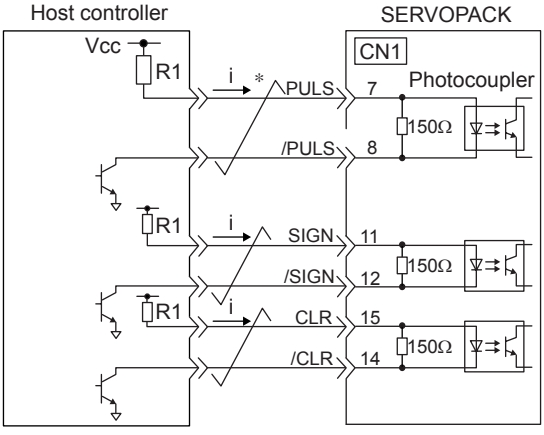

■Example

- When Vcc is +24V: R1=2.2 kΩ
- When Vcc is +12V: R1=1 kΩ
- When Vcc is +5V: R1=180 Ω

Note: When the open-collector output is used, the signal logic is as follows:

When Tr1 is ON	High level input or equivalent
When Tr1 is OFF	Low level input or equivalent

* : Represents twisted-pair wires.

8

When the external power supply is used, the circuit will be isolated by a photocoupler. When the SERVOPACK internal power supply is used, the circuit will not be isolated.

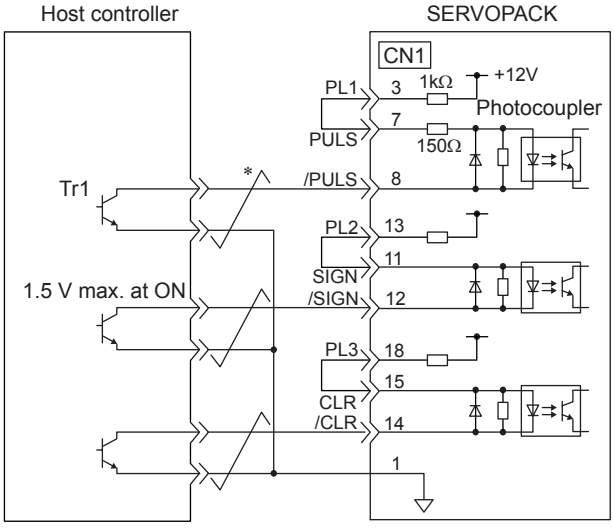

* : Represents twisted-pair wires.

IMPORTANT

When the open-collector output is used, input signal noise margin lowers. Set the parameter Pn200.3 to 1.

(3) Position Control Block Diagram

A block diagram for position control is shown below.

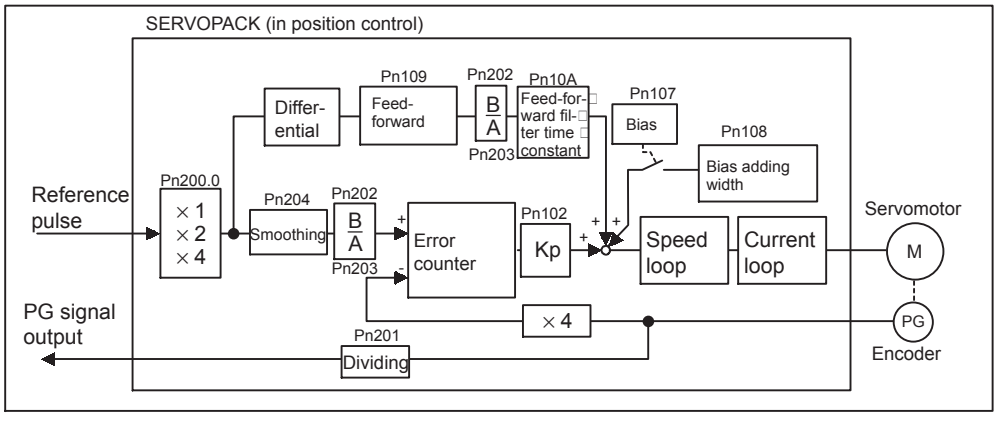

8.6.4 Smoothing

A filter can be applied in the SERVOPACK to a constant-frequency reference pulse.

(1) Selecting a Position Reference Filter

Parameter		Description
Pn207	n.□□□**0**	Acceleration/deceleration filter
	n.□□□**1**	Average movement filter

* After resetting the parameter, turn OFF the power once and turn it ON again.

(2) Filter-related Parameters

Pn204	Position Reference Acceleration/Deceleration Time Constant			Position
	Setting Range	Setting Unit	Factory Setting	Setting Validation
	0 to 6400	0.01 ms	0	Immediately
Pn208	Average Movement Time of Position Reference			Position
	Setting Range	Setting Unit	Factory Setting	Setting Validation
	0 to 6400	0.01 ms	0	Immediately

■ IMPORTANT

When the position reference acceleration/deceleration time constant (Pn204) is changed, a value with no reference pulse input and a position error of 0 will be enabled. To ensure that the setting value is correctly reflected, stop the reference pulse from the host controller and input the clear signal (/CLR), or turn the servo OFF to clear the error.

This function provides smooth motor operating in the following cases. The function does not affect the travel distance (i.e., the number of pulses).

- When the host controller that outputs a reference cannot perform acceleration/deceleration processing.
- When the reference pulse frequency is too low.
- When the reference electronic gear ratio is too high (i.e., 10× or more).

The difference between the position reference acceleration/deceleration time constant (Pn204) and the position reference movement averaging time (Pn208) is shown below.

Acceleration/Deceleration Filter	Average Movement Time Filter
Pn207=n.□□□0	Pn207=n.□□□1

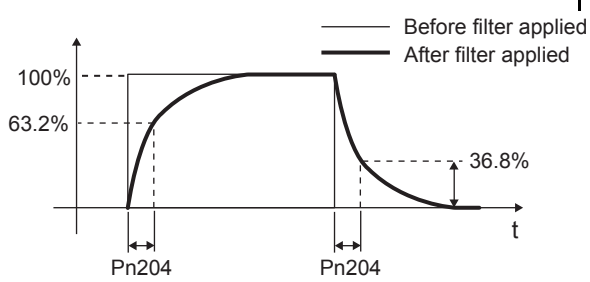

Response waveform for stepwise input

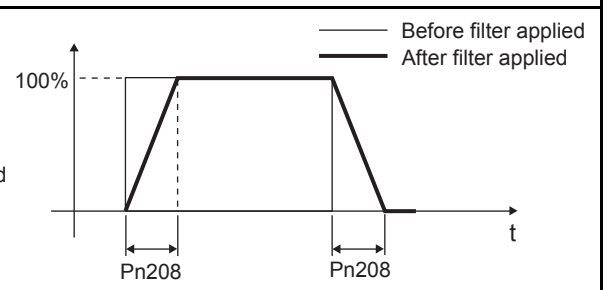

Response waveform for stepwise input

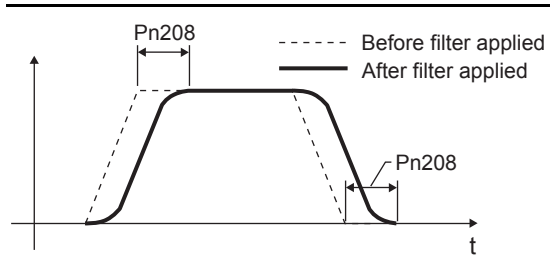

Response waveform for ramp reference input

8.6.5 Positioning Completed Output Signal

This signal indicates that servomotor movement has been completed during position control. Use the signal as an interlock to confirm at the host controller that positioning has been completed.

Type	Signal Name	Connector Pin Number	Setting	Meaning
Output	/COIN	CN1-25, 26 (Factory setting)	ON (low level)	Positioning has been completed.
			OFF (high level)	Positioning is not completed.
This output signal can be allocated to an output terminal with parameter Pn50E. The factory setting is allocated to CN1-25, 26.				

Pn500	Positioning Completed Width			Position
	Setting Range	Setting Unit	Factory Setting	Setting Validation
	0 to 250	Reference units	7	Immediately

The positioning completed (/COIN) signal is output when the difference (position error pulse) between the number of reference pulses output by the host controller and the travel distance of the servomotor is less than the value set in this parameter.

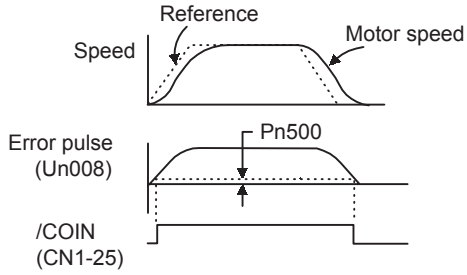

Set the number of error pulses in reference units (the number of input pulses defined using the electronic gear.)

Too large a value at this parameter may output only a small error during low-speed operation that will cause the /COIN signal to be output continuously.

If a servo gain is set that keeps the position error small even when the positioning completed width is large, use Pn207 = n.1□□□ to enable correct output timing for the COIN signal.

The positioning completed width setting has no effect on final positioning accuracy.

/COIN is a position control signal.

When the factory setting is used and the output terminal allocation is not performed with the Pn50E, this signal is used for the speed coincidence output /V-CMP for speed control, and it is always OFF (high level) for torque control.

8.6.6 Positioning Near Signal

This signal indicates that the positioning of the servomotor is near to completion, and is generally used in combination with the positioning completed (/COIN) output signal.

The host controller receives the positioning near signal prior to confirming the positioning-completed signal, and performs the following operating sequence after positioning has been completed to shorten the time required for operation.

Type	Signal Name	Connector Pin Number	Setting	Meaning
Output	/NEAR	Must be allocated	ON (low level)	The servomotor has reached a point near to positioning completed.
			OFF (high level)	The servomotor has not reached a point near to positioning completed.
The output terminal must be allocated with parameter Pn510 in order to use positioning near signal. Refer to *7.3.3 Output Circuit Signal Allocation* for details.				

Pn504	NEAR Signal Width			Position
	Setting Range	Setting Unit	Factory Setting	Setting Validation
	1 to 250	Reference units	7	Immediately

The positioning near (/NEAR) signal is output when the difference (error) between the number of reference pulses output by the host controller and the travel distance of the servomotor is less than the value set in Pn504.

Set the number of error pulses in reference units (the number of input pulses defined using the electronic gear.)

Normally, the setting should be larger than that for the positioning completed width (Pn500).

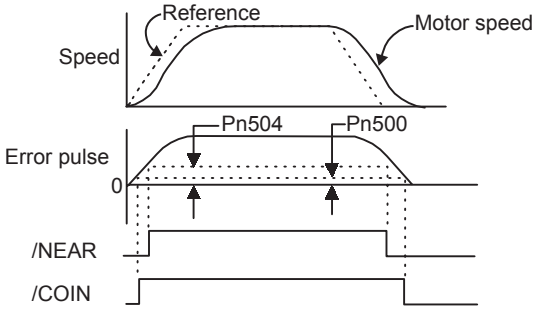

8

8.6.7 Reference Pulse Inhibit Function (INHIBIT)

(1) Description

This function inhibits the SERVOPACK from counting input pulses during position control. The servomotor remains locked (clamped) while pulse are inhibited.

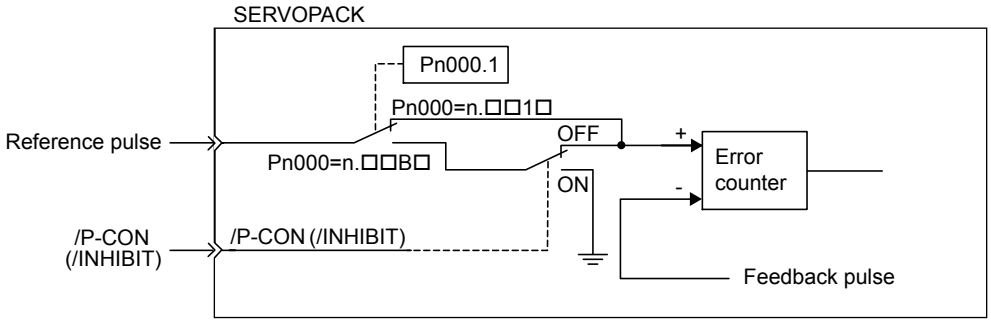

(2) Setting Parameters

Parameter		Meaning
Pn000	n.□□**B**□	Control mode selection: Position control (pulse train reference) ⇔ Inhibit

■ Inhibit (INHIBIT) switching condition
・/P-CON (/INHIBIT) signal ON (low level)

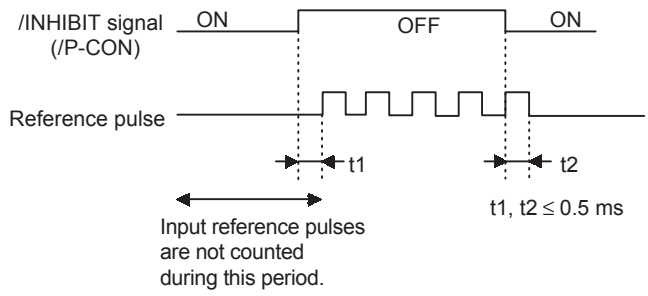

(3) Setting Input Signals

Type	Signal Name	Connector Pin Number	Setting	Meaning
Input	/P-CON	CN1-41 (Factory setting)	ON (low level)	Turns the INHIBIT function ON. (Inhibits the SERVOPACK from counting reference pulses.)
			OFF (high level)	Turns the INHIBIT function OFF. (Counts reference pulses.)
(Input)	(/INHIBIT)	Must be allocated CN1-□□	ON (low level)	Turns the INHIBIT function ON. (Inhibits the SERVOPACK from counting reference pulses.)
			OFF (high level)	Turns the INHIBIT function OFF. (Counts reference pulses.)
These input signals enable the inhibit function. Either the /P-CON or the /INHIBIT signal can be used to switch the inhibit signal. The input signal must be allocated in order to use the /INHIBIT signal. Refer to *7.3.2 Input Circuit Signal Allocation*.				

8.7 Operating Using Torque Control

8.7.1 Setting Parameters

The following parameters must be set for torque control operation with analog voltage reference.

Parameter		Meaning
Pn000	n.□□2□	Control mode selection: Torque control (analog voltage reference)

Pn400	Torque Reference Input Gain			Speed / Position / Torque
	Setting Range	Setting Unit	Factory Setting	Setting Validation
	10 to 100 (1.0 to 10.0 V/rated torque)	0.1V/rated torque	30	Immediately

This sets the analog voltage level for the torque reference (T-REF) that is necessary to operate the servomotor at the rated torque.

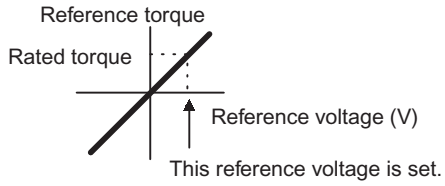

■ EXAMPLE

Pn400 = 30: The servomotor operates at the rated torque with 3-V input (factory setting).

Pn400 = 1000: The servomotor operates at the rated torque with 10-V input.

Pn400 = 200: The servomotor operates at the rated torque with 2-V input.

8.7.2 Torque Reference Input

By applying a torque reference determined by the analog voltage reference to the SERVOPACK, the servomotor torque can be controlled in proportion with the input voltage.

Type	Signal Name	Connector Pin Number	Name
Input	T-REF	CN1-9	Torque Reference Input
	SG	CN1-10	Signal Ground for Torque Reference Input

Used during torque control (analog voltage reference). (Pn000.1 = 2, 6, 8, 9)

The torque reference gain is set in Pn400. For setting details, refer to *8.7.1 Setting Parameters*.

■ Input Specifications

- Input range: ±1 to ±10VDC/rated torque
- Max. allowable input voltage: ±12 VDC
- Factory setting

  Pn400 = 30: Rated torque at 3 V

  +3-V input: Rated torque in forward direction

  +9-V input: 300% rated torque in forward direction

  -0.3-V input: 10% rated torque in reverse direction

  The voltage input range can be changed with parameter Pn400.

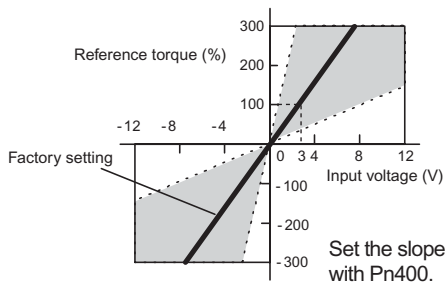

■ Input Circuit Example

Use twisted-pair wires as a countermeasure against noise.

Variable resistor example: Model 25HP-10B manufactured by Sakae Tsushin Kogyo Co., Ltd.

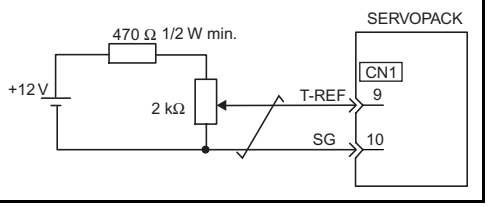

8

INFO

■ Checking the Internal Torque Reference

1. Checking the internal torque reference with the panel operator:
   Use the Monitor Mode (Un-002). Refer to *7.4 Operation in Monitor Mode (Un□□□)*.
2. Checking the internal torque reference with an analog monitor:
   The internal torque reference can also be checked with an analog monitor. Refer to *9.5 Analog Monitor*.

8.7.3 Adjusting the Reference Offset

(1) Automatic Adjustment of the Torque Reference Offset

When using torque control, the servomotor may rotate slowly even when 0 V is specified as the analog reference voltage. This occurs when the host controller or external circuit has a slight offset (measured in mV) in the reference voltage. In this case, the reference offset can be adjusted automatically and manually using the panel operator or digital operator.

The automatic adjustment of analog (speed, torque) reference offset (Fn009) automatically measures the offset and adjusts the reference voltage.

The SERVOPACK performs the following automatic adjustment when the host controller or external circuit has an offset in the reference voltage.

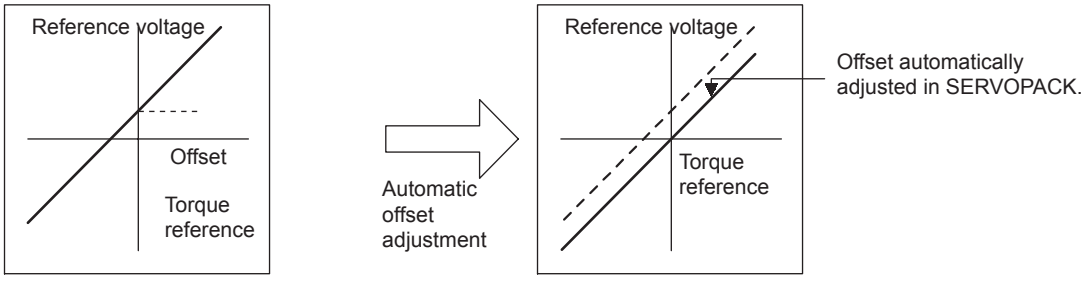

After completion of the automatic adjustment, the amount of offset is stored in the SERVOPACK. The amount of offset can be checked in the manual adjustment of torque reference offset (Fn00B).

The automatic adjustment of analog reference offset (Fn009) cannot be used when a position loop has been formed with the host controller and the error pulse is changed to zero at the servomotor stop due to servolock. Use the torque reference offset manual adjustment (Fn00B).

IMPORTANT

The analog reference offset must be automatically adjusted with the servo OFF.

Use the following procedure for automatic adjustment of the torque reference offset.

Step	Display after Operation	Digital Operator	Panel Operator	Description
1	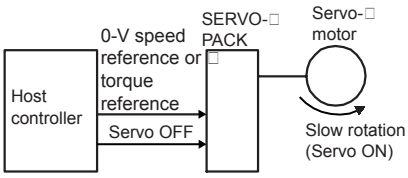			Turn OFF the SERVOPACK, and input the 0-V reference voltage from the host controller or external circuit.
2	Fn000	DSPL/SET (DSPL/SET Key)	MODE/SET (MODE/SET Key)	Press the DSPL/SET or MODE/SET Key to select the utility function mode.
3	Fn009			Press the LEFT/RIGHT or UP/DOWN Key, or UP or DOWN Key to select parameter Fn009. *The digit that can be set will blink.
4	rEF_o	DATA/ENTER (DATA/ENTER Key)	DATA/◀ (DATA/SHIFT Key) (Press at least 1 s.)	Press the DATA/ENTER Key once, or DATA/SHIFT Key for more than one second. “rEF_o” will be displayed.
5	donE	DSPL/SET (DSPL/SET Key)	MODE/SET (MODE/SET Key)	Press the DSPL/SET or MODE/SET Key. The reference offset will be automatically adjusted. When completed, “donE” will blink for about one second.
6	rEF_o	About one second later		After “donE” is displayed, “rEF_o” will be displayed again.
7	Fn009	DATA/ENTER (DATA/ENTER Key)	DATA/◀ (DATA/SHIFT Key) (Press at least 1 s.)	Press the DATA/ENTER Key once, or DATA/SHIFT Key for more than one second to return to the Fn009 display of the utility function mode.

(2) Manual Adjustment of the Torque Reference Offset

Manual adjustment of the torque reference offset (Fn00B) is used in the following cases.

- If a position loop is formed with the host controller and the error is zeroed when servolock is stopped.
- To deliberately set the offset to some value.
- Use this mode to check the offset data that was set in the automatic adjustment mode of the torque reference offset.

This mode operates in the same way as the automatic adjustment mode (Fn009), except that the amount of offset is directly input during the adjustment.

The offset adjustment range and setting units are as follows:

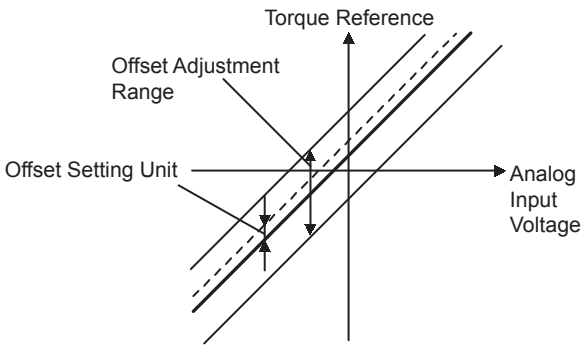

Offset Adjustment Range: -128 to +127
(Torque reference: -1881.6 mV to +1866.9 mV)

Offset Setting Unit
Torque reference: 1 = 14.7 mV

Use the following procedure to manually adjust the torque reference offset.

Step	Display after Operation	Digital Operator	Panel Operator	Description
1	Fn000	DSPL/SET (DSPL/SET Key)	MODE/SET (MODE/SET Key)	Press the DSPL/SET or MODE/SET Key to select the utility function mode.
2	Fn00b			Press the LEFT/RIGHT or UP/DOWN Key or UP or DOWN Key to select parameter Fn00B. *The digit that can be set will blink.
3	-.tr9	DATA/ENTER (DATA/ENTER Key)	DATA/◀ (DATA/SHIFT Key) (Press at least 1 s.)	Press the DATA/ENTER Key once, or DATA/SHIFT Key for more than one second. The display will be as shown at the left. The manual adjustment mode for the torque reference offset will be entered.
4	-.tr9	Servo ON		Turn ON the servo ON (/S-ON) signal. The display will be as shown at the left.
5	-0000		DATA/◀ (DATA/SHIFT Key) (Less than 1 s.)	Press the LEFT or RIGHT Key or DATA/SHIFT Key for less than one second to display the torque reference offset amount.
6				Press the UP or DOWN Key to adjust the amount of offset.
7	-.tr9		DATA/◀ (DATA/SHIFT Key) (Less than 1 s.)	Press the LEFT or RIGHT Key or DATA/SHIFT Key for less than one second to return to the display shown on the left.
8	Fn00b	DATA/ENTER (DATA/ENTER Key)	DATA/◀ (DATA/SHIFT Key) (Press at least 1 s.)	Press the DATA/ENTER Key once, or DATA/SHIFT Key for more than one second to return to the Fn00B display of the utility function mode.

8.7.4 Limiting Servomotor Speed during Torque Control

During torque control, the servomotor is controlled to output the specified torque, which means that the servomotor speed is not controlled. Accordingly, when an excessive reference torque is set for the mechanical load torque, it will prevail over the mechanical load torque and the servomotor speed will greatly increase.

This function serves to limit the servomotor speed during torque control to protect the machine.

With No Speed Limit	With Speed Limit
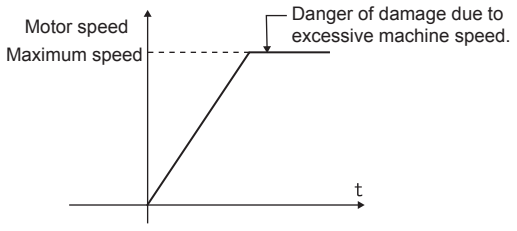	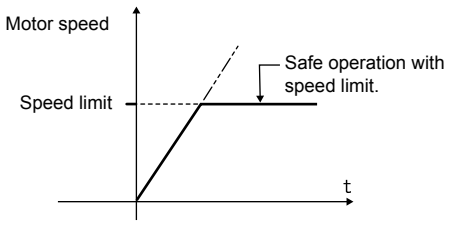

(1) Speed Limit Mode Selection (Torque Limit Option)

Parameter		Description
Pn002	n.□□**0**□	Uses the value set in Pn407 as the speed limit (internal speed limit function).
	n.□□**1**□	Uses V-REF (CN1-5, 6) as an external speed limit input. Applies a speed limit using the input voltage of V-REF and the setting in Pn300 (external speed limit function).

(2) Internal Speed Limit Function

Pn407	Speed Limit During Torque Control			Torque
	Setting Range	Setting Unit	Factory Setting	Setting Validation
	0 to 10000	min^{-1}	10000	Immediately

Sets the servomotor speed limit value during torque control.
The setting in this parameter is enabled when Pn002 = n.□□0□.
The servomotor's maximum speed will be used when the setting in this parameter exceeds the maximum speed of the servomotor used.

(3) External Speed Limit Function

Type	Signal Name	Connector Pin Number	Name
Input	V-REF	CN1-5	External Speed Limit Input
	SG	CN1-6	Signal Ground

Inputs an analog voltage reference as the servomotor speed limit value during torque control.
The smaller value is enabled, the speed limit input from V-REF or the Pn407 (Speed Limit during Torque Control) when Pn002 = n.□□1□.
The setting in Pn300 determines the voltage level to be input as the limit value. Polarity has no effect.

Pn300	Speed Reference Input Gain			Speed Position Torque
	Setting Range	Setting Unit	Factory Setting	Setting Validation
	150 to 3000 (1.50 to 30.0 V/rated speed)	0.01 V/rated speed	600 (6.00 V/rated speed)	Immediately

Sets the voltage level for the speed that is to be externally limited during torque control.
With Pn300 = 600 (factory setting) and 6 V input from V-REF (CN1-5, 6), the actual motor speed is limited to the rated speed of the servomotor used.

INFO

■ The Principle of Speed Limiting

When the speed is outside of the allowable range, a torque that is proportional to the difference between the actual speed and the speed limit is used as negative feedback to bring the speed back within the speed limit range. Accordingly, there is a margin generated by the load conditions in the actual motor speed limit value.

8

(4) Signals Output during Servomotor Speed Limit

Type	Signal Name	Connector Pin Number	Setting	Meaning
Output	/VLT	Must be allocated CN1-□□	ON (low level)	Servomotor speed limit being applied.
			OFF (high level)	Servomotor speed limit not being applied.

This signal is output when the servomotor speed reaches the speed limit value set in Pn407 or set by the analog voltage reference.
For use, this output signal must be allocated with parameter Pn50F. For details, refer to *7.3.3 Output Circuit Signal Allocation*.

8.8 Operating Using Speed Control with an Internally Set Speed

- Internally Set Speed Selection

This function allows speed control operation by externally selecting an input signal from among three servomotor speed settings made in advance with parameters in the SERVOPACK. The speed control operations within the three settings are valid. There is no need for an external speed or pulse generator.

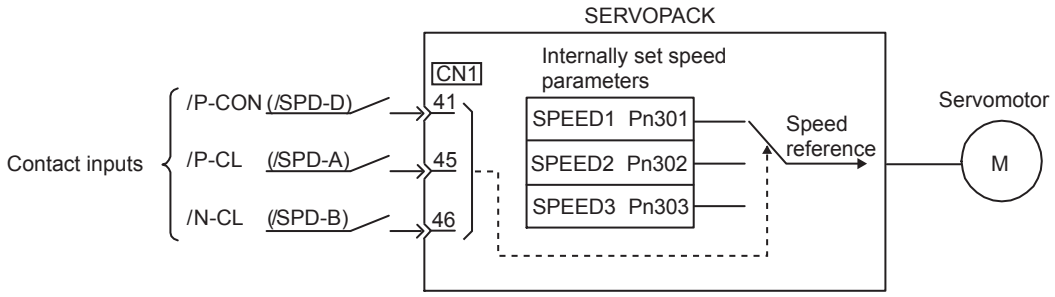

8.8.1 Setting Parameters

Parameter		Meaning
Pn000	n.□□**3**□	Control mode selection: Internally set speed control (contact reference)

Pn301	Internally set speed 1 (SPEED1)		Speed	
	Setting Range	Setting Unit	Factory Setting	Setting Validation
	0 to 10000	min^{-1}	100	Immediately
Pn302	Internally set speed 2 (SPEED2)		Speed	
	Setting Range	Setting Unit	Factory Setting	Setting Validation
	0 to 10000	min^{-1}	200	Immediately
Pn303	Internally set speed 3 (SPEED3)		Speed	
	Setting Range	Setting Unit	Factory Setting	Setting Validation
	0 to 10000	min^{-1}	300	Immediately

Note: The maximum speed of servomotor is used whenever a speed settings for the Pn301 to Pn303 exceed the maximum speed.

8.8.2 Input Signal Settings

The following input signals are used to switch the operating speed.

Type	Signal Name	Connector Pin Number	Meaning
Input	/P-CON	CN1-41	Switches the servomotor rotation direction.
	(/SPD-D)	Must be allocated	
Input	/P-CL	CN1-45	Selects the internally set speed.
	(/SPD-A)	Must be allocated	
Input	/N-CL	CN1-46	Selects the internally set speed.
	(/SPD-B)	Must be allocated	

■ Input Signal Selection

The following two types of operation can be performed using the internally set speeds:

- Operation with the /P-CON, /P-CL, and /N-CL input signals (pins allocated in factory setting)
- Operation with the /SPD-D, /SPD-A, and /SPD-B input signals

/SPD-D, /SPD-A, and /SPD-B input signals must be allocated with parameter Pn50C. Refer to *7.3.2 Input Circuit Signal Allocation*.

8.8.3 Operating Using an Internally Set Speed

Use ON/OFF combinations of the following input signals to operate with the internally set speeds.

Input Signal			Motor Rotation Direction	Speed
/P-CON (/SPD-D)	/P-CL (/SPD-A)	/N-CL (/SPD-B)		
OFF (high)	OFF (high)	OFF (high)	Forward	Stop at 0 of the internally set speed
	OFF (high)	ON (low)		Pn301: Internally Set Speed 1 (SPEED1)
	ON (low)	ON (low)		Pn302: Internally Set Speed 2 (SPEED2)
	ON (low)	OFF (high)		Pn303: Internally Set Speed 3 (SPEED3)
ON (low)	OFF (high)	OFF (high)	Reverse	Stop at 0 of the internally set speed
	OFF (high)	ON (low)		Pn301: Internally Set Speed 1 (SPEED1)
	ON (low)	ON (low)		Pn302: Internally Set Speed 2 (SPEED2)
	ON (low)	OFF (high)		Pn303: Internally Set Speed 3 (SPEED3)

Note: Signal OFF = High level; Signal ON = Low level

IMPORTANT

■Control Mode Switching

When Pn000.1 = 4, 5, or 6, and either /P-CL (/SPD-A) or /N-CL (SPD-B) is OFF (high level), the control mode will switch.

Example:

When Pn000.1=5: Internally set speed selection ⇔ Position control (pulse train)

Input Signal		Speed
/P-CL (/SPD-A)	/N-CL (/SPD-B)	
OFF (high)	OFF (high)	Pulse train reference input (position control)
OFF (high)	ON (low)	Pn301: Internally Set Speed 1 (SPEED1)
ON (low)	ON (low)	Pn302: Internally Set Speed 2 (SPEED2)
ON (low)	OFF (high)	Pn303: Internally Set Speed 3 (SPEED3)

- Example of Operating with Internally Set Speed Selection

The shock that results when the speed is changed can be reduced by using the soft start function.
For details on the soft start function, refer to *8.5.4 Soft Start*.

Example: Operation with an Internally Set Speed and Soft Start

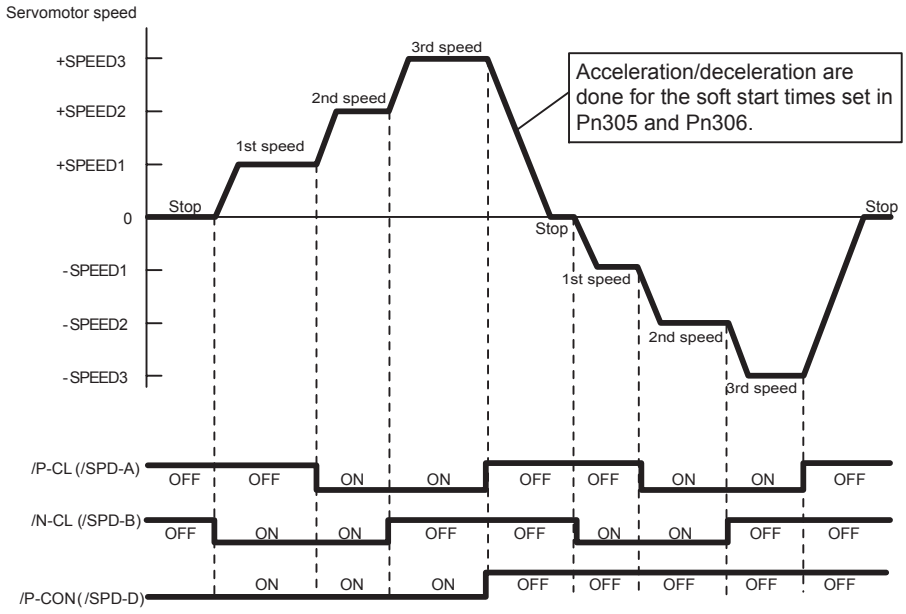

IMPORTANT

When Pn000.1 = 5 (Internally set speed control ⇔ Position control), the soft start function will operate only when selecting the internally set speed. The soft start function cannot be used with pulse reference input. When switching to pulse reference input during operation at either of the three speeds (1st speed to 3rd speed), the pulse reference will not be received by the SERVOPACK until after the positioning completed (/COIN) signal is output. Always begin the output of the pulse reference from the host controller after the positioning completed (/COIN) signal is output from the SERVOPACK.

Example: Operation with an Internally Set Speed and Soft Start ⇔ Position Control (Pulse Train Reference)

Signal Timing in Position Control

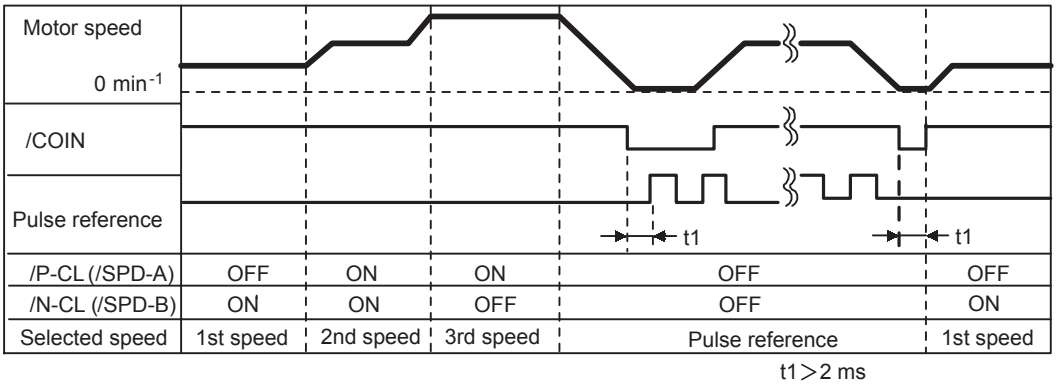

Note: 1. The soft start function is used in the above figure.
2. The t_1 value is not affected by whether the soft start function is used.
A maximum delay of 2 ms occurs in loading /P-CL (/SPD-A) and /N-CL (/SPD-B).

8.9 Limiting Torque

The SERVOPACK provides the following four methods for limiting output torque to protect the machine.

Setting Level	Limiting Method	Reference Section
1	Internal torque limit	8.9.1
2	External torque limit	8.9.2
3	Torque limiting by analog voltage reference	8.9.3
4	External torque limit + Torque limiting by analog voltage reference	8.9.4

8.9.1 Internal Torque Limit (Limiting Maximum Output Torque)

Maximum torque is always limited to the values set in the following parameters.

Pn402	Forward Torque Limit		Speed	Position	Torque
	Setting Range	Setting Unit	Factory Setting	Setting Validation	
	0 to 800	%	800	Immediately	
Pn403	Reverse Torque Limit		Speed	Position	Torque
	Setting Range	Setting Unit	Factory Setting	Setting Validation	
	0 to 800	%	800	Immediately	

The settings in these parameters are constantly enabled. The setting unit is a percentage of rated torque.

If the torque limit is set higher than the maximum torque of the servomotor, the maximum torque of the servomotor is used (as is the case with the 800% factory setting).

No Internal Torque Limit (Maximum Torque Can Be Output)	Internal Torque Limit
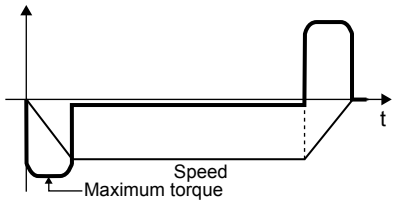	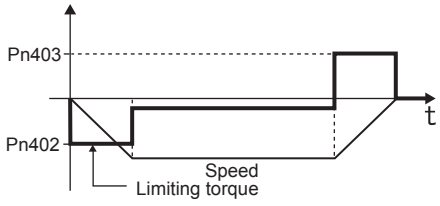

Too small a torque limit setting will result in insufficient torque during acceleration and deceleration.

8

8.9.2 External Torque Limit (Output Torque Limiting by Input Signals)

This function allows the torque to be limited at specific times during machine operation, for example, during press stops and hold operations for robot workpieces.

An input signal is used to enable the torque limits previously set in parameters.

(1) Related Parameters

Pn404	Forward External Torque Limit		Speed Position Torque	
	Setting Range	Setting Unit	Factory Setting	Setting Validation
	0 to 800	%	100	Immediately
Pn405	Reverse External Torque Limit		Speed Position Torque	
	Setting Range	Setting Unit	Factory Setting	Setting Validation
	0 to 800	%	100	Immediately

Note: The setting unit is a percentage of rated torque (i.e., the rated torque is 100%).

(2) Input Signals

Type	Signal Name	Connector Pin Number	Setting	Meaning	Limit Value
Input	/P-CL	CN1-45 (Factory Setting)	ON (low level)	Forward external torque limit ON	The value set in Pn402 or Pn404 (whichever is smaller)
			OFF (high level)	Forward external torque limit OFF	Pn402
Input	/N-CL	CN1-46 (Factory Setting)	ON (low level)	Reverse external torque limit ON	The value set in Pn403 or Pn405 (whichever is smaller)
			OFF (high level)	Reverse external torque limit OFF	Pn403
When using this function, make sure that there are no other signals allocated to the same terminals as /P-CL and /N-CL. When multiple signals are allocated to the same terminal, the signals are handled with OR logic, which affects the ON/OFF state of the other signals. Refer to *7.3.2 Input Circuit Signal Allocation*.					

(3) Changes in Output Torque during External Torque Limiting

Example: External torque limit (Pn402, Pn403) set to 800%

		/P-CL (Forward External Torque Limit Input)	
		High level	Low level
/N-CL (Reverse External Torque Limit Input)	High level	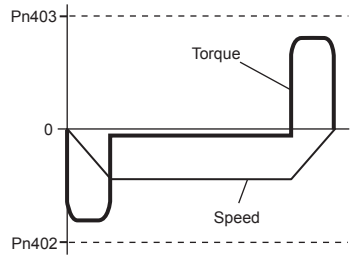	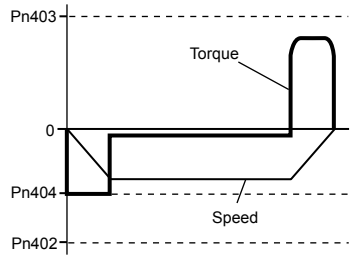
	Low level	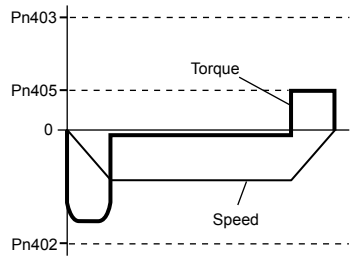	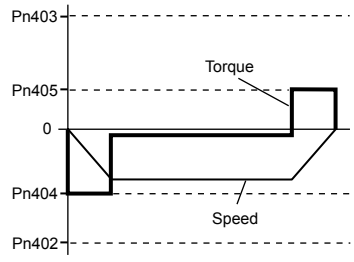

Note: In this example, the servomotor rotation direction is Pn000 = n.□□□0 (standard setting, CCW = forward).

8

8.9.3 Torque Limiting Using an Analog Voltage Reference

Torque limiting by analog voltage reference limits torque by assigning a torque limit in an analog voltage to the T-REF terminals (CN1-9 and 10). This function can be used only during speed or position control, not during torque control.

Refer to the following block diagram when the torque limit with an analog voltage reference is used for speed control.

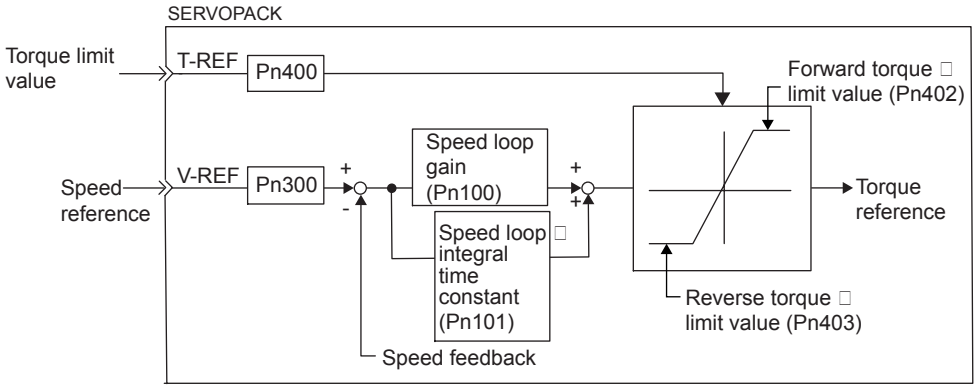

INFO

There is no polarity in the input voltage of the analog voltage reference for torque limiting. The absolute values of both + and - voltages are input, and a torque limit value corresponding to that absolute value is applied in the forward or reverse direction.

(1) Related Parameters

Parameter		Meaning
Pn002	n.□□□**1**	Speed control option: Uses the T-REF terminal to be used as an external torque limit input.
When n.□□□2 is set, the T-REF terminal is used for torque feed-forward input, but the functions cannot be used together.		

(2) Input Signals

Type	Signal Name	Connector Pin Number	Name
Input	T-REF	CN1-9	Torque reference input
	SG	CN1-10	Signal ground for torque reference input
The torque limit input gain is set at parameter Pn400. Refer to *8.7.1 Setting Parameters*. ■ Input Specifications • Input range: ±1 VDC to ±10 VDC/rated torque • Maximum allowable input voltage: ±12 VDC			

8.9.4 Torque Limiting Using an External Torque Limit and Analog Voltage Reference

This function can be used to combine torque limiting by an external input signal and by analog voltage reference. Because the torque limit by analog voltage reference is input from T-REF (CN1-9, 10), this function cannot be used during torque control. Use /P-CL (CN1-45) or /N-CL (CN1-46) for torque limiting by external input signal.

When /P-CL (or /N-CL) is ON, either the torque limit by analog voltage reference or the setting in Pn404 (or Pn405) will be applied as the torque limit, whichever is smaller.

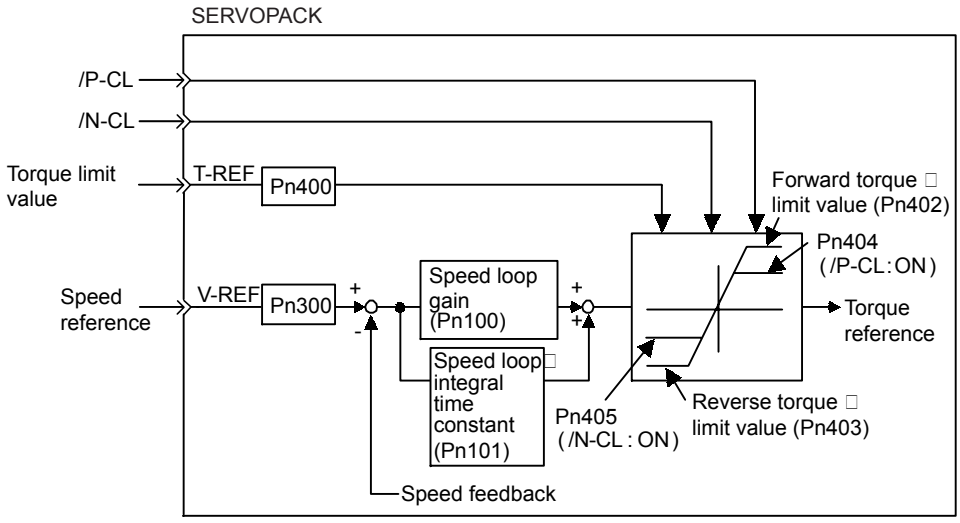

(1) Related Parameters

Parameter		Meaning
Pn002	n.□□□**3**	Speed control option: When /P-CL or /N-CL is enabled, the T-REF terminal is used as the external torque limit input.
When n.□□□2 is set, T-REF is used for torque feed-forward input, but the functions cannot be used together.		

Pn404	Forward External Torque Limit		Speed / Position / Torque	
	Setting Range	Setting Unit	Factory Setting	Setting Validation
	0 to 800	%	100	Immediately
Pn405	Reverse External Torque Limit			
	Setting Range	Setting Unit	Factory Setting	Setting Validation
	0 to 800	%	100	Immediately

* The setting unit is a percentage of rated torque (i.e., the rated torque is 100%).

8

(2) Input Signals

Type	Signal Name	Connector Pin Number	Name
Input	T-REF	CN1-9	Torque reference input
	SG	CN1-10	Signal ground for torque reference input
The torque limit input gain is set in parameter Pn400. Refer to *8.7.1 Setting Parameters*. ■ Input Specifications • Input range: ±1 VDC to ±10 VDC/rated torque • Maximum allowable input voltage: ±12 VDC			

Type	Signal Name	Connector Pin Number	Setting	Meaning	Limit Value
Input	/P-CL	CN1-45 (Factory setting)	ON (low level)	Forward external torque limit ON	The analog voltage reference limit or the value set in Pn402 or Pn404 (whichever is smaller)
			OFF (high level)	Forward external torque limit OFF	Pn402
Input	/N-CL	CN1-46 (Factory setting)	ON (low level)	Reverse external torque limit ON	The analog voltage reference limit or the value set in Pn403 or Pn405 (whichever is smaller)
			OFF (high level)	Reverse external torque limit OFF	Pn403
When using the torque limiting with the external torque limit and analog voltage reference, make sure that there are no other signals allocated to the same terminals as /P-CL and /N-CL. When multiple signals are allocated to the same terminal, the signals are handled with OR logic, which affects the ON/OFF state of the other signals. Refer to *7.3.2 Input Circuit Signal Allocation*.					

8.9.5 Checking Output Torque Limiting during Operation

The following signal can be output to indicate that the servomotor output torque is being limited.

Type	Signal Name	Connector Pin Number	Setting	Meaning
Output	/CLT	Must be allocated	ON (low level)	Servomotor output torque is being limited.
			OFF (high level)	Torque is not being limited.
The output terminal must be allocated with parameter Pn50F to use this output signal. Refer to *7.3.3 Output Circuit Signal Allocation* for details.				

8.10 Control Mode Selection

The methods and conditions for switching SERVOPACK control modes are described below.

8.10.1 Setting Parameters

The following combinations of control modes can be selected according to the application at hand.

Parameter		Control Method
Pn000	n.□□**4**□	Internally set speed control (contact reference) ⇔ Speed control (analog voltage reference)
	n.□□**5**□	Internally set speed control (contact reference) ⇔ Position control (pulse train reference)
	n.□□**6**□	Internally set speed control (contact reference) ⇔ Torque control (analog voltage reference)
	n.□□**7**□	Position control (pulse train reference) ⇔ Speed control (analog voltage reference)
	n.□□**8**□	Position control (pulse train reference) ⇔ Torque control (analog voltage reference)
	n.□□**9**□	Torque control (analog voltage reference) ⇔ Speed control (analog voltage reference)
	n.□□**A**□	Speed control (analog voltage reference) ⇔ Zero clamp
	n.□□**B**□	Position control (pulse train reference) ⇔ Position control (inhibit)

8.10.2 Switching the Control Mode

(1) Switching Internally Set Speed Control (Pn000.1 = 4, 5, or 6)

With the sequence input signals in the factory setting (Pn50A = n.□□□0), the control mode will switch when both /P-CL (/SPD-A) and /N-CL (/SPD-B) signals are OFF (high level).

Type	Signal Name	Connector Pin Number	Setting	Meaning
Input	/P-CL	CN1-45 (Factory setting)	OFF (high level)	Switches control mode.
	(/SPD-A)	Must be allocated		
Input	/N-CL	CN1-46 (Factory setting)	OFF (high level)	
	(/SPD-B)	Must be allocated		

■ Input Signal Selection

The following two types of control mode selection are available for switching from internally set speed control:

- Switching with the /P-CL and /N-CL input signals (pins allocated in factory setting)
- Switching with the /SPD-A and /SPD-B input signals

When using /SPD-A and /SPD-B, they must be allocated with parameter Pn50C. Refer to *7.3.2 Input Circuit Signal Allocation*.

8

(2) Switching Other Than Internally Set Speed Control (Pn000.1 = 7, 8, 9, A, or B)

Use the following signals to switch control modes. The control modes switch as shown below for each of the signal states indicated.

When changing the sequence input signal from the factory setting (Pn50A = n.□□□1), allocate the /C-SEL to an input terminal and change modes with the /C-SEL signal. In this case, input a speed reference (analog voltage reference) for speed control, and a position reference (pulse train reference) for position control.

Type	Signal Name	Connector Pin Number	Setting	Pn000 Setting				
				n.□□**7**□	n.□□**8**□	n.□□**9**□	n.□□**A**□	n.□□**B**□
Input	/P-CON	CN1-41 (Factory setting)	ON (low level)	Speed	Torque	Speed	Zero clamp	Inhibit
			OFF (high level)	Position	Position	Torque	Speed	Position
(Input)	(/C-SEL)	Must be allocated	ON (low level)	Speed	Torque	Speed	Zero clamp	Inhibit
			OFF (high level)	Position	Position	Torque	Speed	Position
The control mode can be switched with either /P-CON or /C-SEL. When using the /C-SEL signal, the input signal must be allocated. Refer to *7.3.2 Input Circuit Signal Allocation*.								

8.11 Other Output Signals

The following output signals, which have no direct connection with the control modes, are used for machine protection.

8.11.1 Servo Alarm Output (ALM) and Alarm Code Output (ALO1, ALO2, ALO3)

(1) Servo Alarm Output (ALM)

This signal is output when an error is detected in the SERVOPACK.

Type	Signal Name	Connector Pin Number	Setting	Meaning
Output	ALM	CN1-31, 32 (Factory setting)	ON (low level)	Normal SERVOPACK condition
			OFF (high level)	SERVOPACK alarm condition

■ IMPORTANT
Always form an external circuit so this alarm output turns OFF the main circuit power supply to the SERVOPACK.

(2) Alarm Reset

Type	Signal Name	Connector Pin Number	Name
Input	/ALM-RST	CN1-44	Alarm Reset

When a servo alarm (ALM) has occurred and the cause of the alarm has been eliminated, the alarm can be reset by turning this signal (/ALM-RST) from OFF (high level) to ON (low level).

This signal can be allocated to other pin numbers with Pn50B.

For details on the procedure, refer to *7.3.2 Input Circuit Signal Allocation*.

The /ALM-RST signal cannot be constantly enabled by the allocation of an external input signal. Reset the alarm by changing the signal from high level to low level. The alarm can also be reset from the panel operator or digital operator. Refer to *7.1.2 Key Names and Functions* for details.

IMPORTANT

1. Some encoder-related alarms cannot be reset with the /ALM-RST signal input. To reset these alarms, turn OFF the control power supply.
2. When an alarm occurs, always eliminate the cause before resetting the alarm. The methods for troubleshooting alarms are described in *10.1.6 Troubleshooting of Alarm and Warning*.

(3) Alarm Code Output

Type	Signal Name	Connector Pin Number	Meaning
Output	ALO1	CN1-37	Alarm code output
Output	ALO2	CN1-38	Alarm code output
Output	ALO3	CN1-39	Alarm code output
Output	SG	CN1-1	Signal ground for alarm code output

These open-collector signals output alarm codes. The ON/OFF combination of these output signals indicates the type of alarm detected by the servomotor.

Use these signals to display alarm codes at the host controller. Refer to *10.1.1 Alarm Display Table* for details on alarm code output.

8.11.2 Warning Output (/WARN)

Type	Signal Name	Connector Pin Number	Setting	Meaning
Output	/WARN	Must be allocated	ON (high level)	Normal state
			OFF (low level)	Warning state
This output signal displays warnings before an overload (A.710) or regenerative overload (A.320) alarm is output. For use, the /WARN signal must be allocated with parameter Pn50F. For details, refer to *7.3.3 Output Circuit Signal Allocation*.				

- Related Parameters

The following parameter is used to select the alarm code output.

Parameter		Description
Pn001	n.**0**□□□	Outputs alarm codes alone for alarm codes ALO1, ALO2, and ALO3.
	n.**1**□□□	Outputs both alarm and warning codes for alarm codes ALO1, ALO2, and ALO3, and outputs an alarm code when an alarm occurs.
• Refer to *8.11.1 Servo Alarm Output (ALM) and Alarm Code Output (ALO1, ALO2, ALO3)* for alarm code descriptions. • Refer to *10.1.2 Warning Display* for the ON/OFF combinations of ALO1, ALO2, and ALO3 when a warning code is output.		

8.11.3 Running Output Signal (/TGON)

Type	Signal Name	Connector Pin Number	Setting	Meaning
Output	/TGON	CN1-27, 28 (Factory setting)	ON (low level)	Servomotor is operating (Motor speed is above the setting in Pn502).
			OFF (high level)	Servomotor is not operating (Motor speed is below the setting in Pn502).
This signal is output to indicate that the servomotor is currently operating above the setting in parameter Pn502. The /TGON signal can be allocated to another output terminal with parameter Pn50E. For details, refer to *7.3.3 Output Circuit Signal Allocation*.				
■ IMPORTANT • If the brake signal (/BK) and running output signal (/TGON) are allocated to the same output terminal, the /TGON signal will go to low level at the speed at which the movable part drops on the vertical axis, which means that the /BK signal will not go to high level. (This is because signals are output with OR logic when multiple signals are allocated to the same output terminal.). Always allocate /TGON and /BK signals to different terminals.				

- Related Parameter

Pn502	Rotation Detection Level			Speed Position Torque
	Setting Range	Setting Unit	Factory Setting	Setting Validation
	1 to 10000	min^{-1}	20	Immediately
Set the range in which the running output signal (/TGON) is output in this parameter. When the servomotor rotation speed is above the value set in the Pn502, it is judged to be servomotor rotating and the running output signal (/TGON) is output. The rotation detection signal can also be checked on the digital operator. For details, refer to *7.1.4 Status Display* and *7.4.1 List of Monitor Modes*.				

8.11.4 Servo Ready (/S-RDY) Output

Type	Signal Name	Connector Pin Number	Setting	Meaning
Output	/S-RDY	CN1-29, 30 (Factory setting)	ON (low level)	Servo is ready.
			OFF (high level)	Servo is not ready.

This signal indicates that the SERVOPACK received the servo ON signal and completed all preparations.

It is output when there are no servo alarms and the main circuit power supply is turned ON.

An added condition with absolute encoder specifications is that when the SEN signal is at high level, absolute data was output to the host controller.

The servo ready signal condition can also be checked on the digital operator. For details, refer to *7.1.4 Status Display* and *7.4.1 List of Monitor Modes*.

The /S-RDY signal can be allocated to another output terminal with parameter Pn50E. For details, refer to *7.3.3 Output Circuit Signal Allocation*.

9

Adjustments

9.1 Autotuning - - - - 9-2
9.1.1 Servo Gain Adjustment Methods - - - - 9-2
9.1.2 List of Servo Adjustment Functions - - - - 9-3

9.2 Online Autotuning - - - - 9-5
9.2.1 Online Autotuning - - - - 9-5
9.2.2 Online Autotuning Procedure - - - - 9-6
9.2.3 Selecting the Online Autotuning Execution Method - - - - 9-7
9.2.4 Machine Rigidity Setting for Online Autotuning - - - - 9-8
9.2.5 Method for Changing the Machine Rigidity Setting - - - - 9-9
9.2.6 Saving the Results of Online Autotuning - - - - 9-10
9.2.7 Procedure for Saving the Results of Online Autotuning - - - - 9-11

9.3 Manual Tuning - - - - 9-12
9.3.1 Explanation of Servo Gain - - - - 9-12
9.3.2 Servo Gain Manual Tuning - - - - 9-13
9.3.3 Position Loop Gain - - - - 9-13
9.3.4 Speed Loop Gain - - - - 9-14
9.3.5 Speed Loop Integral Time Constant - - - - 9-14

9.4 Servo Gain Adjustment Functions - - - - 9-15
9.4.1 Feed-forward Reference - - - - 9-15
9.4.2 Torque Feed-forward - - - - 9-16
9.4.3 Speed Feed-forward - - - - 9-17
9.4.4 Proportional Control Operation (Proportional Operation Reference) - 9-18
9.4.5 Using the Mode Switch (P/PI Switching) - - - - 9-19
9.4.6 Setting the Speed Bias - - - - 9-22
9.4.7 Speed Feedback Filter - - - - 9-22
9.4.8 Speed Feedback Compensation - - - - 9-23
9.4.9 Switching Gain Settings - - - - 9-25
9.4.10 Torque Reference Filter - - - - 9-26

9.5 Analog Monitor - - - - 9-28

9

9.1 Autotuning

9.1.1 Servo Gain Adjustment Methods

The SERVOPACK has the servo gains to determine the servo response characteristics. The servo gains are set in the parameters. The parameters are designated for each function as shown in *9.1.2 List of Servo Adjustment Functions*.

The servo gains are factory-set to stable values, and responsiveness can be increased depending on the actual machine conditions. The following flowchart shows an overview procedure for adjusting the servo gains to reduce the positioning time for position control. Follow this flowchart to effectively adjust the servo gains. For functions in bold lines in the flowchart, select the adjustment method according to the client's intent using *9.1.2 List of Servo Adjustment Functions*.

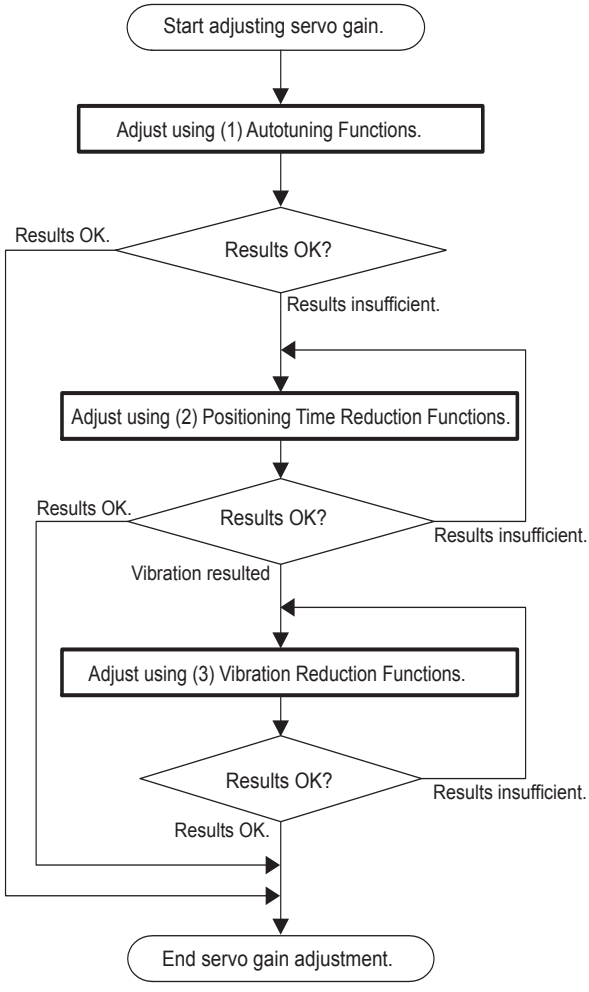

If the desired responsiveness cannot be achieved adjusting according to the servo gain adjustment methods, consider the following possible causes.

- Autotuning does not suit the operating conditions.
  Adjust the servo gains manually. Refer to *9.3 Manual Tuning*.
- The selection of settings for the positioning time reduction functions or vibration reduction functions are not appropriate.
  Each function may not be effective for all machines due to machine characteristics or operating conditions.
  Use other positioning time reduction function or vibration reduction function.

9.1.2 List of Servo Adjustment Functions

(1) Autotuning Functions

Autotuning calculates the load moment of inertia, which determines the servo responsiveness, and automatically adjusts parameters, such as the Speed Loop Gain Kv (Pn100), Speed Loop Integral Time Constant Ti (Pn101), Position Loop Gain Kp (Pn102), and Torque Reference Filter Time Constant Tf (Pn401). Refer to the following table to select the appropriate autotuning function for your desired purpose and adjust the servo gains.

Function Name and Related Parameters	Description	Guidelines for Selection	Reference Section
Online Autotuning Pn110.0 Fn001 Fn007	This function automatically measures the machine characteristics and sets the required servo gains accordingly. This function allows beginners to adjust the servo gains easily. The load moment of inertia is calculated during operation for a user reference, and the servo gains (Kv, Ti, Kp, and Tf) are set according to the Machine Rigidity Setting (Fn001).	Only the minimum number of parameters must be set for autotuning using a normal operation reference.	9.2

(2) Positioning Time Reduction Functions

Function Name and Related Parameters	Description	Features	Valid Control Modes	Reference Section
Feed-forward Pn109 Pn10A	Feed-forward compensation for the position reference is added to the speed reference.	Adjustment is easy. The system will be unstable if a large value is set, possibly resulting in overshooting or vibration.	Position	9.4.1
Torque feed-forward Pn002 Pn400	Inputs torque feed-forward to the torque reference input terminal and adds to the internal torque reference at the speed control.		Speed	9.4.2
Speed feed-forward Pn207 Pn300	Inputs speed feed-forward to the speed reference input terminal and adds to the internal speed reference at the position control.		Position	9.4.3
Mode Switch (P/PI Switching) Pn10B Pn10C Pn10D Pn10E Pn10F	Switches from PI control to P control using the value of an internal servo variable in a parameter (torque, speed, acceleration, or position error) as a threshold value.	The setting for automatic switching between PI and P control is easy.	Position Speed	9.4.5
Speed Feedback Compensation Pn110 Pn111	Compensates the motor speed using an observer.	Adjustment is easy because the compensation can be set as a percentage. If the speed loop gain increases, the position loop gain also increases, however sometimes the servo rigidity decreases.	Position Speed	9.4.8
Gain Switching Pn100 Pn101 Pn102 Pn104 Pn105 Pn106	Uses the external signals to change each parameter for speed loop gain (Kv), speed loop integral time constant (Ti), and position loop gain (Kp.)	–	Position Speed	9.4.9

(3) Vibration Reduction Functions

Function Name and Related Parameters	Description	Features	Valid Control Modes	Reference Section
Soft Start Pn305 Pn306	Converts a stepwise speed reference to a constant acceleration or deceleration for the specified time interval.	A constant acceleration/deceleration is achieved for smoother operation. The operation time is increased for the specified time.	Speed	8.5.4
Acceleration/ Deceleration Filters Pn204 Pn207	A 1st-order delay filter for the position reference input.	Enables smooth operation. The reference time increases by the filter delay time even after the reference input has been completed.	Position	8.6.4
Movement Average Filter Pn207 Pn208	A movement averaging filter for the position reference input.	Enables smooth operation. The reference time increases by the filter delay time even after the reference input has been completed.	Position	8.6.4
Speed Feedback Filter Pn308	A standard 1st-order delay filter for the speed feedback.	The feedback speed is smoother. The response is delayed if a large value is set.	Position Speed	9.4.7
Speed Reference Filter Pn307	A 1st-order delay filter for the speed reference.	The speed reference is smoother. The response is delayed if a large value is set.	Speed	8.5.5
Torque Reference Filter Pn401	A series of three filter time constants, 1st-order, 2nd-order, and 1st-order, can be set in order for the torque reference.	These filters are effective in essentially all frequency bands. The response is delayed if a large value (low frequency) is set.	Position Speed Torque	9.4.10
Notch Filter Pn409	Notch filters can be set for the torque reference.	Mainly effective for vibration between 500 and 2,000 Hz. Instability will result if the setting is not correct.	Position Speed Torque	9.4.10

9.2 Online Autotuning

9.2.1 Online Autotuning

Online autotuning calculates the load moment of inertia during operation of the SERVOPACK and sets parameters so that the servo gains consistent with the Machine Rigidity (Fn001) are achieved.

Online autotuning may not be effective in the following cases.

- The load moment of inertia varies in less than 200 ms.
- The motor speed is lower than 100 min^{-1} or the acceleration reference is very even.
- Load rigidity is low and mechanical vibration occurs easily or friction is high.
- The speed reference is a stepwise reference.

If the condition meets one of the above cases or the desired operation cannot be achieved by the online autotuning, calculate the load moment of inertia on the basis of the machine specifications or using the moment of inertia detection function of Yaskawa's servodrive supporting tool "SigmaWin200". Set the value in Pn103 and perform the adjustment manually.

The following utility function is also available for the online autotuning.

Fn007: Writes the load moment of inertia calculated by the online autotuning in Pn103 and uses as the default value for the next calculation.

9.2.2 Online Autotuning Procedure

⚠ WARNING

- Do not perform extreme adjustment or setting changes causing unstable servo operation.
  Failure to observe this warning may result in injury and damages to the machine.
- Adjust the gains slowly while confirming motor operation.

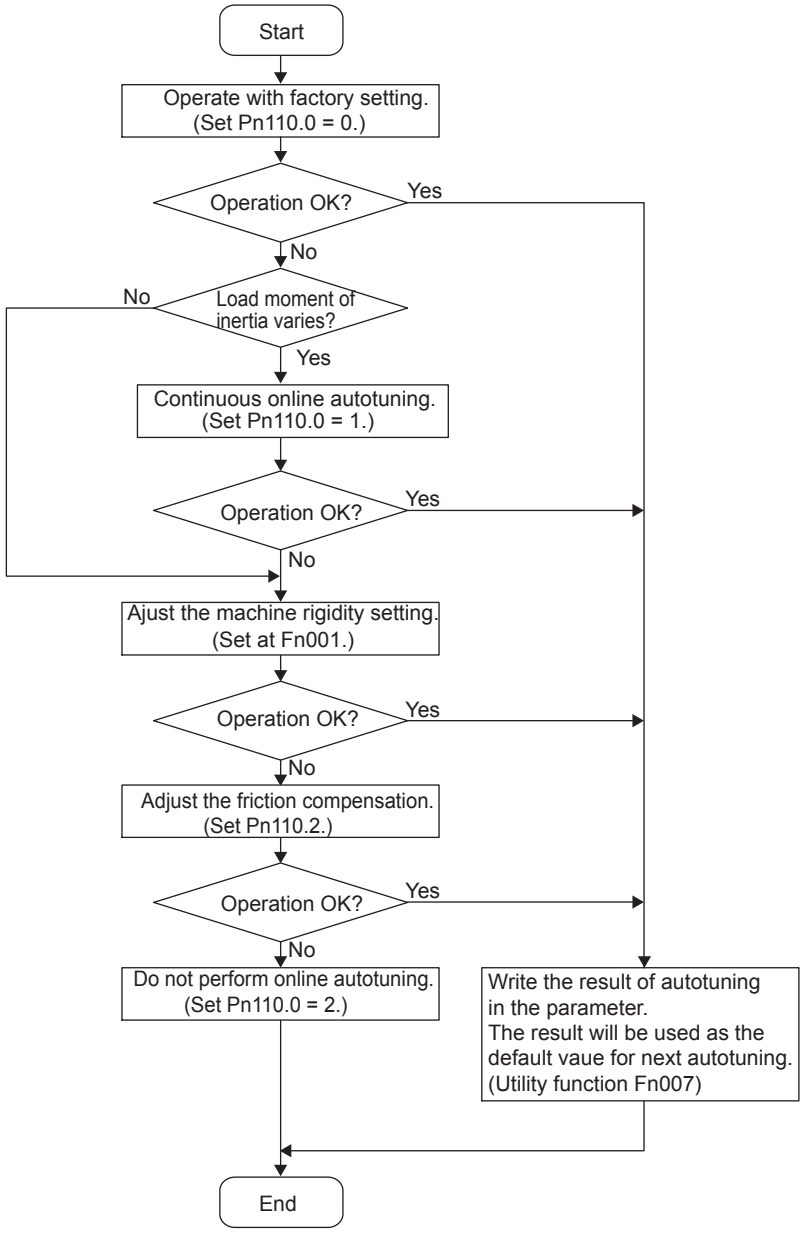

9.2.3 Selecting the Online Autotuning Execution Method

There are three methods that can be used for online autotuning: At start of operation, constantly, and none. The selection method is described next.

Pn110	Online Autotuning Switches			Speed Position
	Setting Range	Setting Unit	Factory Setting	Setting Validation
	–	–	0010	After restart

Parameter		Meaning
Pn110	n.□□□0	Online autotuning is performed only after the first time power is turned ON. (Factory Setting)
	n.□□□1	Online autotuning (moment of inertia calculations) is performed continuously.
	n.□□□2	Online autotuning is not performed.

The factory setting is n.□□□0. This setting is recommended for applications in which the load moment of inertia does not change much or if the load moment of inertia is not known. The inertia calculated at the beginning of operation is used continously. In this case, differences in machine status and operation references at the beginning of operation may cause minor differences in the calculation results of the load moment of inertia, causing differences in the servo responsiveness each time the power supply is turned ON.

If this occurs, overwrite the moment of inertia ratio in Pn103 using the utility function Fn007 (Writing to EEPROM moment of inertia ratio data obtained from online autotuning), and set Pn110 to n.□□□2 to disable online autotuning.

The setting n.□□□1 is used when the load moment of inertia varies constantly. This setting enables a consistent responsiveness even when the load moment of inertia changes. If the load moment of inertia changes in less than 200 ms, however, the autotuning accuracy will deteriorate, in which case Pn110.0 should be set to 0 or 2.

The setting n.□□□2 is used when online autotuning is not possible, when the load moment of inertia is known and the moment of inertia ratio is set in Pn103 to perform the adjustment manually, or any other time the online autotuning function is not going to be used.

9.2.4 Machine Rigidity Setting for Online Autotuning

There are ten machine rigidity settings for online autotuning. When the machine rigidity setting is selected, the servo gains (Speed Loop Gain, Speed Loop Integral Time Constant, Position Loop Gain, and Torque Reference Filter Time Constant) are determined automatically. The factory setting for the machine rigidity setting is 4. The speed loop is suitable for PI or I-P control.

When parameter Pn10B.1 is 0, PI control will be used and when Pn10B.1 is 1, I-P control will be used. To validate the setting, however, the power supply must be turned OFF and then back ON.

After having validated the setting, always set the machine rigidity setting.

When setting the machine rigidity after having changed the position loop gain (Pn102), the value closest to the set position loop gain is displayed as the initial value of machine rigidity.

- Speed Loop PI Control

Machine Rigidity Setting Fn001	Position Loop Gain [s^{-1}] Pn102	Speed Loop Gain [Hz] Pn100	Speed Loop Integral Time Constant [0.01 ms] Pn101	Torque Reference Filter Time Constant [0.01 ms] Pn401
1	15	15	6000	250
2	20	20	4500	200
3	30	30	3000	130
4	40	40	2000	100
5	60	60	1500	70
6	85	85	1000	50
7	120	120	800	30
8	160	160	600	20
9	200	200	500	15
10	250	250	400	10

If the machine rigidity setting is greater, the servo gain will increase and positioning time will decrease. If the setting is too large, however, vibration may result depending on the machine configuration. Set the machine rigidity starting at a low value and increasing it within the range where vibration does not occur.

9.2.5 Method for Changing the Machine Rigidity Setting

The machine rigidity setting is changed in utility function mode using parameter Fn001. The procedure is given below.

Step	Display after Operation	Digital Operator	Panel Operator	Description
1	Fn000	DSPL/SET (DSPL/SET Key)	MODE/SET (MODE/SET Key)	Press the DSPL/SET or MODE/SET Key to select the utility function mode.
2	Fn001			Press the Up or Down Cursor Key to select Fn001. *The digit that can be set will blink.
3	d0004	DATA/ENTER (DATA/ENTER Key)	DATA/◀ (DATA/SHIFT) (More than 1 s.)	Press the DATA/ENTER or DATA/SHIFT Key for one second or more. The display shown at the left will appear and the rigidity for online autotuning can be set.
4	d0004 UP ↓ ↑ DOWN d0005			Press the Up or Down Cursor Key to select the machine rigidity setting.
5	donE	DSPL/SET (DSPL/SET Key)	MODE/SET (MODE/SET Key)	Press the DSPL/SET or MODE/SET Key. The rigidity setting will be changed and “donE” will blink on the display for about one second.
6	d0005	About one second later		After “donE” is displayed, the setting will be displayed again.
7	Fn001	DATA/ENTER (DATA/ENTER Key)	DATA/◀ (DATA/SHIFT) (More than 1 s.)	Press the DATA/ENTER or DATA/SHIFT Key for more than one second to return to the Fn001 display of the utility function mode.

This completes changing the machine rigidity setting for online autotuning.

9.2.6 Saving the Results of Online Autotuning

⚠ CAUTION

- Always set the correct moment of inertia ratio when online autotuning is not used.
  If the moment of inertia ratio is set incorrectly, vibration may occur.

For online autotuning, the most recent load moment of inertia is calculated and the control parameters are adjusted to achieve response suitable for the machine rigidity setting. When online autotuning is performed, the Position Loop Gain (Pn102), Speed Loop Gain (Pn100), and Speed Loop Integral Time Constant (Pn101) are saved. When the power supply to the SERVOPACK is turned OFF, however, the calculated load moment of inertia is lost and the factory setting is used as the default value to start autotuning the next time the power supply is turned ON.
To use the calculated load moment of inertia as the default value the next time the power supply is turned ON, the utility function mode parameter Fn007 (Writing to EEPROM moment of inertia ratio data obtained from online autotuning) can be used to save the most recent value in parameter Pn103 (Moment of Inertia Ratio). The moment of inertia ratio is given as the moment of inertia ratio (%) of the rotor moment of inertia of the servomotor.

Pn103	Moment of Inertia Ratio			Speed Position Torque
	Setting Range	Setting Unit	Factory Setting	Setting Validation
	0 to 10,000	%	0	Immediately

$$\text{Moment of inertia ratio} = \frac{\text{Motor axis conversion load moment of inertia } (J_L)}{\text{Roter moment of inertia } (J_M)}$$

The factory setting for the moment of inertia ratio is 0% (no-load operation of motor without connecting a machine).

9.2.7 Procedure for Saving the Results of Online Autotuning

The following procedure is used to save the results of online autotuning.

Step	Display after Operation	Digital Operator	Panel Operator	Description
1	Fn000	DSPL/SET (DSPL/SET Key)	MODE/SET (MODE/SET Key)	Press the DSPL/SET or MODE/SET Key to select the utility function mode.
2	Fn007	∧ ∨	▲ ▼	Press the Up or Down Cursor Key to select parameter Fn007. *The digit that can be set will blink.
3	d0200	DATA/ENTER (DATA/ENTER Key)	DATA/◀ (DATA/SHIFT) (More than 1 s.)	Press the DATA/ENTER or DATA/SHIFT Key for one second or more. The display at the left will appear for a moment of inertia ratio of 200%.
4	donE	DSPL/SET (DSPL/SET Key)	MODE/SET (MODE/SET Key)	Press the DSPL/SET or MODE/SET Key. The moment of inertia ratio will be saved. When completed, “donE” will blink for about one second.
5	d0200	About one second later		After “donE” is displayed, the moment of inertia ratio will be displayed again.
6	Fn007	DATA/ENTER (DATA/ENTER Key)	DATA/◀ (DATA/SHIFT) (More than 1 s.)	Press the DATA/ENTER or DATA/SHIFT Key for one second or more to return to the Fn007 display of the utility function mode.

This completes saving the default value for the moment of inertia ratio for online autotuning. The next time the power supply is turned ON, the value that was saved for the Moment of Inertia Ratio (Pn103) will be used to start online autotuning.

9.3 Manual Tuning

9.3.1 Explanation of Servo Gain

The block diagram for position control is as follows:

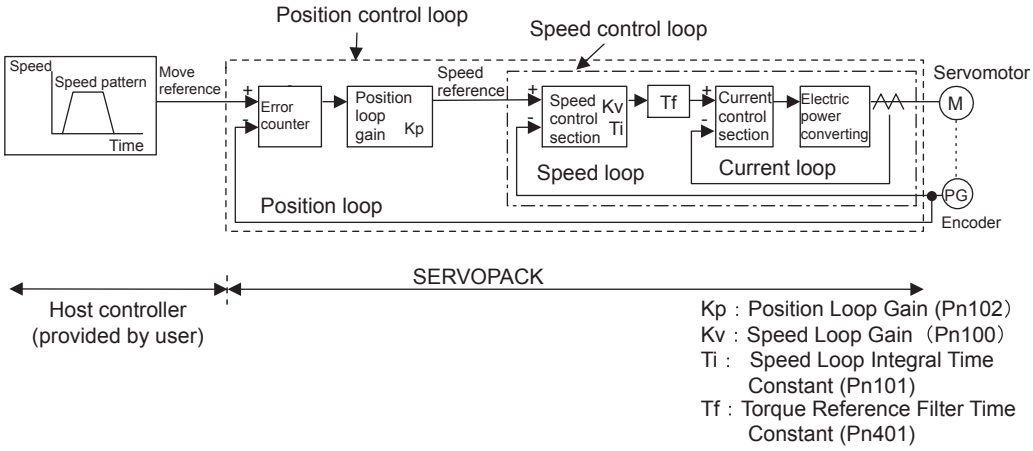

To adjust the servo gain manually, understand the configuration and characteristics of the SERVOPACK and adjust the servo gain parameters one by one. If one parameter is changed, it is almost always necessary to adjust the other parameters. It will also be necessary to make preparations such as setting up a measuring instrument to monitor the output waveform from the analog monitor.

The SERVOPACK has three feedback loops (i.e., position loop, speed loop, and current loop). The innermost loop must have the highest response and the middle loop must have higher response than the outermost. If this principle is not followed, it will result in vibration or responsiveness decreases.

The SERVOPACK is designed to ensure that the current loop has good response performance. The user need to adjust only position loop gain and speed loop gain.

9.3.2 Servo Gain Manual Tuning

The SERVOPACK has the following parameters for the servo gains. Setting the servo gains in the parameters can adjust the servo responsiveness.

- Pn100: Speed loop gain (Kv)
- Pn101: Speed loop integral time constant (Ti)
- Pn102: Position loop gain (Kp)
- Pn401: Torque reference filter time constant (Tf)

For the position and speed control, the adjustment in the following procedure can increase the responsiveness. The positioning time in position control can be reduced.

Step	Explanation
1	Set correctly the moment of inertia ratio (Pn103). The utility function Fn007 can be used after the online autotuning.
2	Increase the speed loop gain (Pn100) to within the range so that the machine does not vibrate. At the same time, decrease the speed loop integral time constant (Pn101).
3	Adjust the torque reference filter time constant (Pn401) so that no vibration occurs.
4	Repeat the steps 1 and 2. Then reduce the value for 10 to 20%.
5	For the position control, increase the position loop gain (Pn102) to within the range so that the machine does not vibrate.

Perform the manual tuning in the following cases.

- To increase the servo gains more than the values set by the online autotuning.
- To determine the servo gains and moment of inertia ratio by the user.

Start the manual tuning from the factory setting or the values set by the online autotuning. Prepare measuring instruments such as memory recorder so that the signals can be observed from the analog monitor (CN5) such as "Torque Reference" and "Motor Speed," and "Position Error Monitor" for the position control. (Refer to *9.5 Analog Monitor*.) The servodrive supporting tool "SigmaWin100/200" allows you to observe such signals. Prepare either of them.

9.3.3 Position Loop Gain

Pn102	Position Loop Gain (Kp)			Position
	Setting Range	Setting Unit	Factory Setting	Setting Validation
	1 to 2,000	1/s	40	Immediately
The responsiveness of the position loop is determined by the position loop gain. The responsiveness increases and the positioning time decreases when the position loop gain is set to a higher value. In general, the position loop gain cannot be set higher than natural vibrating frequency of the mechanical system, so the mechanical system must be made more rigid to increase its natural vibrating frequency and allow the position loop gain to be set to a high value.				

INFO

If the position loop gain (Pn102) cannot be set high in the mechanical system, an overflow alarm may occur during high speed operation. In this case, increase the values in the following parameter to suppress detection of the overflow alarm.

Pn505	Overflow Level			Position
	Setting Range	Setting Unit	Factory Setting	Setting Validation
	1 to 32,767	256 reference units	1,024	Immediately

This parameter's new setting must satisfy the following condition.

$$\text{Pn505} \geq \frac{\text{Max. feed speed (reference units/s)}}{\text{Pn102}} \times 2.0$$

9

9.3.4 Speed Loop Gain

Pn100	Speed Loop Gain (Kv)		Speed Position	
	Setting Range	Setting Unit	Factory Setting	Setting Validation
	1 to 2,000	Hz	40	Immediately

This parameter determines the responsiveness of the speed loop. If the speed loop's responsiveness is too low, it will delay the outer position loop and cause overshooting and vibration of the speed reference. The SERVOPACK will be most stable and responsive when the speed loop gain is set as high as possible within the range that does not cause vibration in the mechanical system. The value of speed loop gain is the same as the set value of Pn100 if the moment of inertia ratio in Pn103 has been set correctly.

Pn103	Moment of Inertia Ratio		Speed Position Torque	
	Setting Range	Setting Unit	Factory Setting	Setting Validation
	0 to 10,000	%	0	Immediately

$$\text{Pn103setvalue} = \frac{\text{Motor axis conversion load moment of inertia } (J_L)}{\text{Servomotor rotor moment of inertia } (J_M)} \times 100(\%)$$

The factory setting is Pn103=0. Before adjusting the servo, determine the moment of inertia ratio with the equation above and set parameter Pn103.

9.3.5 Speed Loop Integral Time Constant

Pn101	Speed Loop Integral Time Constant (Ti)		Speed Position	
	Setting Range	Setting Unit	Factory Setting	Setting Validation
	15 to 51,200 (0.15 to 512.00 ms)	0.01 ms	2,000 (20.00 ms)	Immediately

The speed loop has an integral element so that the speed loop can respond to minute inputs. This integral element causes a delay in the SERVOPACK. If the time constant is set too long, overshooting will occur, which results in a longer positioning settling time or responsiveness decreases.
The estimated set value for Pn101 depends on the speed loop control method with Pn10B.1, as shown below.

INFO

■ Selecting the Speed Loop Control Method (PI Control or I-P Control)

Generally, I-P control is more effective in high-speed positioning or high-speed/precision manufacturing applications. The position loop gain is lower than it would be in PI control, so shorter positioning times and smaller arc radii can be achieved. On the other hand, PI control is generally used when switching to P control fairly often with a mode switch or other method.

9.4 Servo Gain Adjustment Functions

9.4.1 Feed-forward Reference

Pn109	Feed-forward			Position
	Setting Range	Setting Unit	Factory Setting	Setting Validation
	0 to 100	%	0	Immediately
Pn10A	Feed-forward Filter Time Constant			Position
	Setting Range	Setting Unit	Factory Setting	Setting Validation
	0 to 6,400 (0.00 to 64.00 ms)	0.01ms	0	Immediately

Applies feed-forward compensation in position control inside the SERVOPACK. Use this parameter to shorten positioning time. Too high value may cause the machine to vibrate. For ordinary machines, set 80% or less in this parameter.

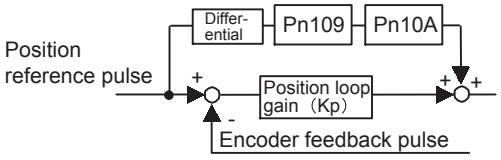

9.4.2 Torque Feed-forward

Parameter		Meaning
Pn002	n.□□□**0**	Disabled
	n.□□□**2**	Uses T-REF terminal for torque feed-forward input.

Pn400	Torque Reference Input Gain			Speed Position Torque
	Setting Range	Setting Unit	Factory Setting	Setting Validation
	10 to 100 (1.0 to 10.0V/Rated torque)	0.1V/Rated torque	30	Immediately

The torque feed-forward function is valid only in speed control (analog reference).

The torque feed-forward function shortens positioning time, differentiates a speed reference at the host controller to generate a torque feed-forward reference, and inputs the torque feed-forward reference together with the speed reference to the SERVOPACK.

Too high a torque feed-forward value will result in overshooting or undershooting. To prevent such troubles, set the optimum value while observing the system responsiveness.

Connect a speed reference signal line to V-REF (CN1-5 and -6) and a torque forward-feed reference to T-REF (CN1-9 and -10) from the host controller.

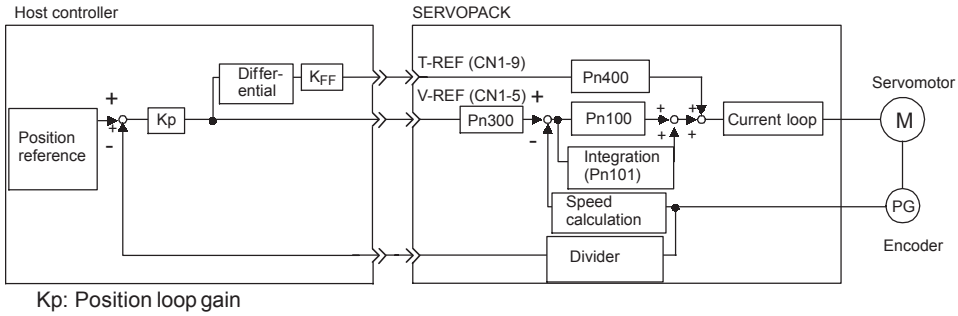

Kp: Position loop gain

K_{FF}: Feed-forward gain

Torque feed-forward is set using the parameter Pn400.

The factory setting is Pn400 = 30. If, for example, the torque feed-forward value is ±3V, then, the torque is limited to ±100% of the rated torque.

The torque feed-forward function cannot be used with torque limiting by analog voltage reference described in *8.9.3 Torque Limiting Using an Analog Voltage Reference*.

9.4.3 Speed Feed-forward

Parameter		Meaning
Pn207	n.□□**0**□	Disabled
	n.□□**1**□	Uses V-REF terminal for speed feed-forward input.

Pn300	Speed Reference Input Gain			Speed Position Torque
	Setting Range	Setting Unit	Factory Setting	Setting Validation
	150 to 3,000 (1.50 to 30.00 V/Rated speed)	0.01 V/Rated speed	600	Immediately

The speed feed-forward function uses analog voltages and is valid only in position control.

The speed feed-forward function is used to shorten positioning time. The host controller differentiates the position reference to generate the feed-forward reference, and inputs the feed-forward reference together with the position reference to the SERVOPACK.

Too high a speed feed-forward value will result in overshooting or undershooting. To prevent such troubles, set the optimum value while observing the system responsiveness.

Connect a position reference signal line to PULS and SIGN (CN1-7, -8, -11, and -12) and a speed feed-forward reference signal line to V-REF (CN1-5 and -6) from the host controller.

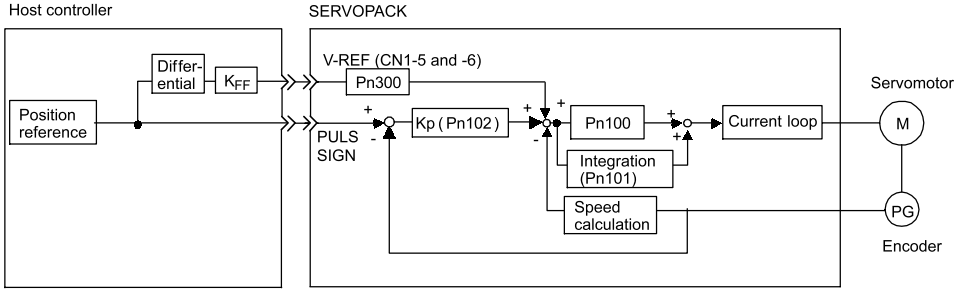

Kp: Position loop gain

K_{FF}: Feed-forward gain

Speed feed-forward value is set using the parameter Pn300.

The factory setting is Pn300 = 600. If, for example, the speed feed-forward value is ±6V, then the speed is limited to the rated speed.

9.4.4 Proportional Control Operation (Proportional Operation Reference)

If parameter Pn000.1 is set to 0 or 1 as shown below, the /P-CON input signal serves as switch to change between PI control and P control.

- PI control: Proportional/Integral control
- P control: Proportional control

Parameter		Control Mode		
Pn000	n.□□**0**□	Speed Control	Effective in speed control or position control. Input signal /P-CON (CN1-41) is used to select PI control or P control. CN1-41 is OFF (H level). — PI control CN1-41 is ON (L level). — P control	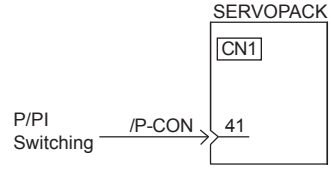
	n.□□**1**□	Position Control		

- When sending references from the host controller to the SERVOPACK, P control mode can be selected from the host controller for particular operating conditions. This mode switching method can be used to suppress overshooting and shorten the settling time. Refer to *9.4.5 Using the Mode Switch (P/PI Switching)* for more details on inputting the /P-CON signal and switching the control mode for particular operating conditions.
- If PI control mode is being used and the speed reference has a reference offset, the servomotor may rotate very slowly and fail to stop even if 0 is specified as the speed reference. In this case, use P control mode to stop the servomotor.

9.4.5 Using the Mode Switch (P/PI Switching)

Use the mode switch (P/PI switching) function in the following cases:

- To suppress overshooting during acceleration or deceleration (for speed control)
- To suppress undershooting during positioning and reduce the settling time (for position control)

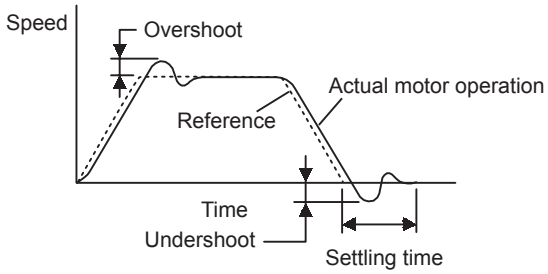

The mode switch function automatically switches the speed control mode from PI control mode to P control[1] mode based on a comparison between the servo's internal value and a user-set detection level.

IMPORTANT

1. The mode switch function is used in very high-speed positioning when it is necessary to use the servodrive near the limits of its capabilities. The speed response waveform must be observed to adjust the mode switch.
2. For normal use, the speed loop gain and position loop gain set by autotuning provide sufficient speed/position control. Even if overshooting or undershooting occur, they can be suppressed by setting the host controller's acceleration/deceleration time constant, the SERVOPACK's Soft Start Acceleration/Deceleration Time (Pn305, Pn306), or Position Reference Acceleration/Deceleration Time Constant (Pn204).

(1) Selecting the Mode Switch Setting

The SERVOPACK provides the following four mode switch settings (0 to 3). Select the appropriate mode switch setting with parameter Pn10B.0.

Parameter		Mode Switch Selection	Parameter Containing Detection Point Setting	Setting Unit
Pn10B	n.□□□0	Use a torque reference level for detection point. (Factory Setting)	Pn10C	Percentage to the rated torque
	n.□□□1	Use a speed reference level for detection point.	Pn10D	Servomotor speed: min^{-1}
	n.□□□2	Use an acceleration level for detection point.	Pn10E	Servomotor acceleration: 10 min^{-1}/s
	n.□□□3	Use a position error pulse for detection point.	Pn10F	Reference unit
	n.□□□4	Do not use the mode switch function.	–	–
Select a condition to execute the mode switch (P/PI switching). (Setting is validated immediately.)				

TERMS

[1] From PI control to P control

PI control means proportional/integral control and P control means proportional control. In short, switching "from PI control to P control" reduces effective servo gain, making the SERVOPACK more stable.

Using the Torque Reference Level to Switch Modes (Factory Setting)

With this setting, the speed loop is switched to P control when the value of torque reference input exceeds the torque set in parameter Pn10C. The factory default setting for the torque reference detection point is 200% of the rated torque (Pn10C = 200).

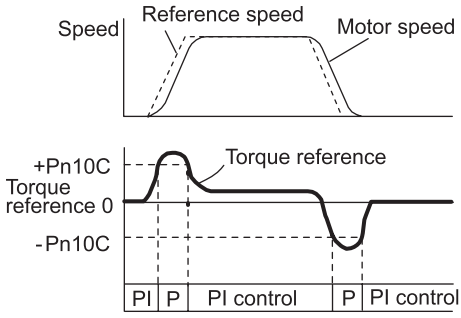

■ Operating Example

If the mode switch function is not being used and the SERVOPACK is always operated with PI control, the speed of the motor may overshoot or undershoot due to torque saturation during acceleration or deceleration. The mode switch function suppresses torque saturation and eliminates the overshooting or undershooting of the motor speed.

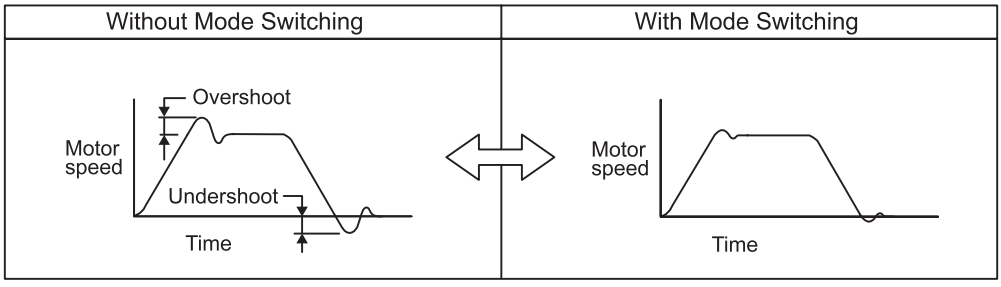

Using the Speed Reference Level to Switch Modes

With this setting, the speed loop is switched to P control when the value of speed reference input exceeds the speed set in parameter Pn10D.

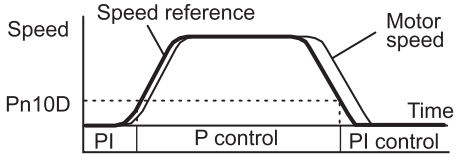

■ Operating Example

In this example, the mode switch is used to reduce the settling time. It is necessary to increase the speed loop gain to reduce the settling time. Using the mode switch suppresses overshooting and undershooting when speed loop gain is increased.

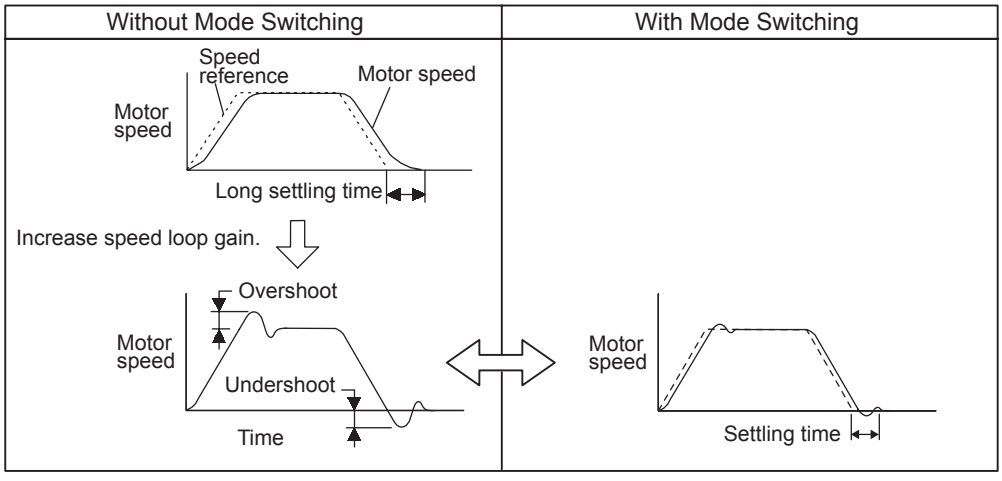

Using the Acceleration Level to Switch Modes

With this setting, the speed loop is switched to P control when the motor's acceleration rate exceeds the acceleration rate set in parameter Pn10E.

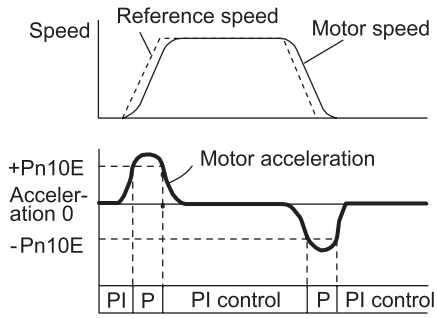

■ Operating Example

If the mode switch function is not being used and the SERVOPACK is always operated with PI control, the speed of the motor may overshoot or undershoot due to torque saturation during acceleration or deceleration. The mode switch function suppresses torque saturation and eliminates the overshooting or undershooting of the motor speed.

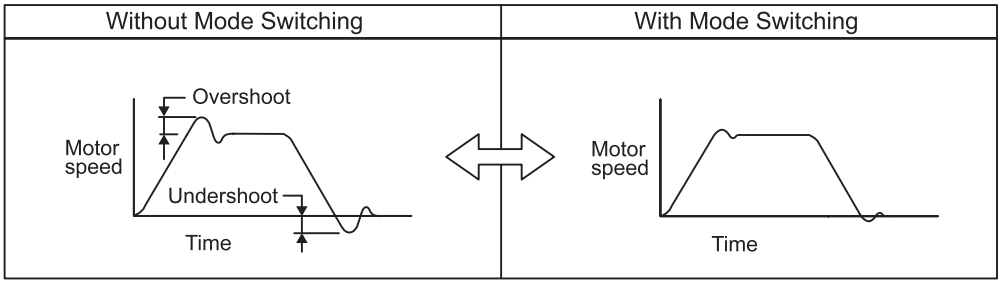

Using the Error Pulse Level to Switch Modes

This setting is effective with position control only.

With this setting, the speed loop is switched to P control when the error pulse exceeds the value set in parameter Pn10F.

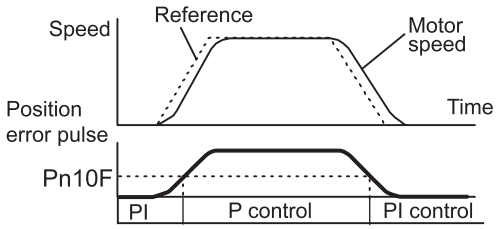

■ Operating Example

In this example, the mode switch is used to reduce the settling time. It is necessary to increase the speed loop gain to reduce the settling time. Using the mode switch suppresses overshooting and undershooting when speed loop gain is increased.

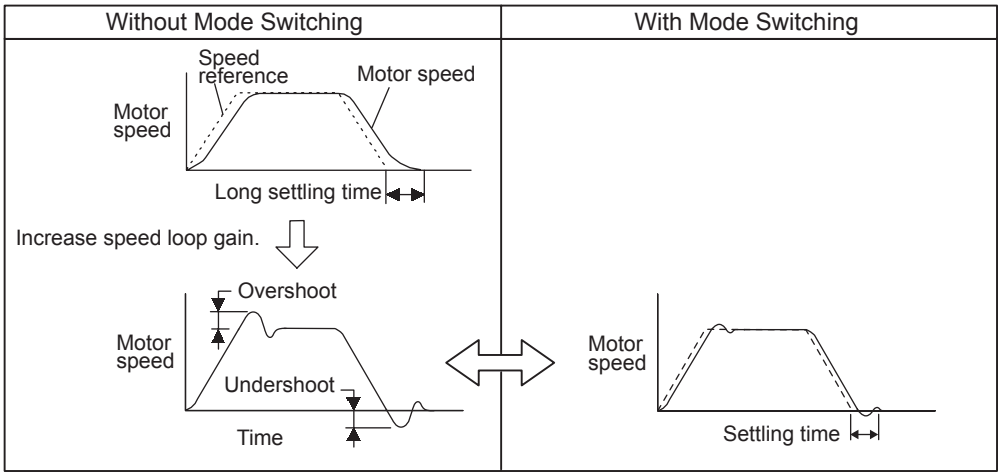

9.4.6 Setting the Speed Bias

The settling time for positioning can be reduced by setting the following parameters to add bias in the speed reference block in the SERVOPACK.

Pn107	Bias			Position
	Setting Range	Setting Unit	Factory Setting	Setting Validation
	0 to 450	min^{-1}	0	Immediately
Pn108	Bias Width Addition			Position
	Setting Range	Setting Unit	Factory Setting	Setting Validation
	0 to 250	Reference units	7	Immediately

To reduce the positioning time, set these parameters based on the machine's characteristics.
The Bias Width Addition (Pn108) specifies when the Bias (Pn107) is added and the width is expressed in error pulse units. The bias input will be added when the error pulse value exceeds the width set in Pn108.

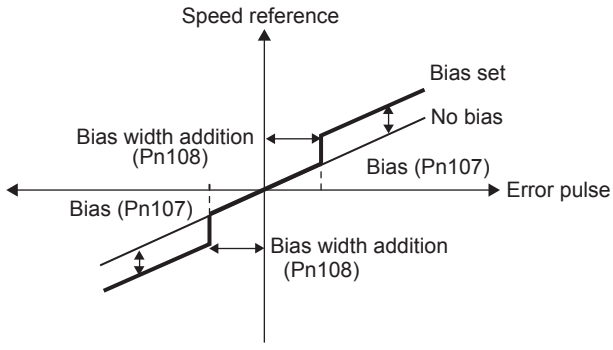

9.4.7 Speed Feedback Filter

Pn308	Speed Feedback Filter Time Constant		Speed	Position
	Setting Range	Setting Unit	Factory Setting	Setting Validation
	0 to 65,535 (0.00 to 655.35 ms)	0.01 ms	0	Immediately
Sets the 1st-order filter for the speed loop's speed feedback. Makes the motor speed smoother and reduces vibration. If the set value is too high, it will introduce a delay in the loop and cause poor responsiveness.				

9.4.8 Speed Feedback Compensation

The speed feedback compensation can be used to reduce vibration and allow a higher speed loop gain to be set. In the end, the speed feedback compensation allows the positioning settling time to be reduced because the position loop gain can also be increased if the speed loop gain can be increased.

Pn110	Online Autotuning Switches		Speed	Position
	Setting Range	Setting Unit	Factory Setting	Setting Validation
	–	–	0010	After restart

Pn111	Speed Feedback Compensation		Speed	Position
	Setting Range	Setting Unit	Factory Setting	Setting Validation
	1 to 500	%	100	Immediately

Parameter		Function
Pn110	n.□□**0**□	Speed feedback compensation is used.
	n.□□**1**□	Speed feedback compensation is not used. (Standard speed feedback)

IMPORTANT

When this function is used, it is assumed that the moment of inertia ratio set in Pn103 is correct. Verify that the moment of inertia ratio has been set correctly.

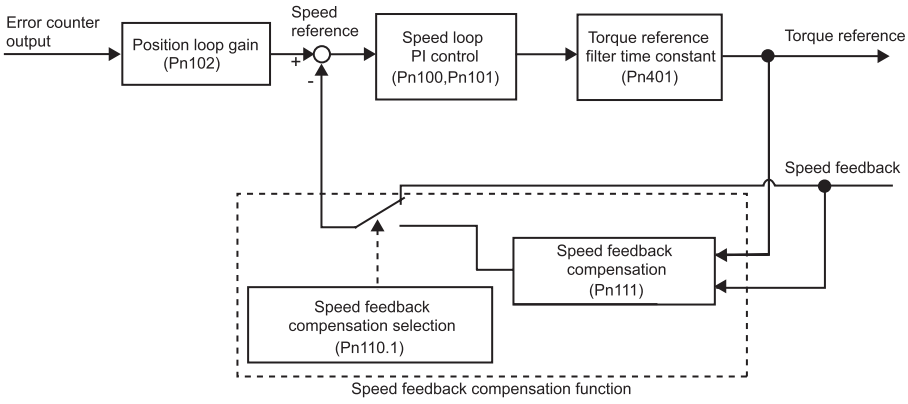

(1) Adjustment Procedure

The following procedure explains how to adjust when the speed loop gain cannot be increased due to vibrations in the mechanical system. When adding a speed feedback compensation, observe the position error and torque reference with the analog monitor while adjusting the servo gain. Refer to *9.5 Analog Monitor* on monitoring the position error and torque reference.

1. Set parameter Pn110 to “0002” so that the following conditions are satisfied.
   - To use the speed feedback compensation
   - Not to use the online autotuning function
2. With PI control, gradually increase the Speed Loop Gain in Pn100 and reduce the Speed Loop Integral Time Constant Pn101, so that the setting the Position Loop Gain in Pn102 to the same value as that of the Speed Loop Gain in Pn100.

   Use the result from the following equation as an initial estimate when setting the Speed Loop Integral Time Constant in Pn101.

   $$\text{Speed loop integral time constant (Pn101)} = \frac{4000}{2\pi \times \text{Pn100}}$$

   Speed loop gain units: Hz

   Check the units when setting the Speed Loop Integral Time Constant in Pn101. The value in Pn101 is set in units of 0.01 ms.

   Set the same value for the speed loop gain and position loop gain even though the speed loop gain units (Hz) are different form the position loop gain units (1/s).
3. Repeat step 2 to increase the speed loop gain while monitoring the settling time with the analog monitor’s position error and checking whether vibration occurs in the torque reference. If there is any vibrating noise or noticeable vibration, gradually increase the Torque Reference Filter Time Constant in Pn401.
4. Gradually increase only the position loop gain. When it has been increased about as far as possible, then decrease the Speed Feedback Compensation in Pn111 from 100% to 90%. Then repeat steps 2 and 3.
5. Decrease the speed feedback compensation to a value lower than 90%. Then repeat steps 2 through 4 to shorten the settling time. If the speed feedback compensation is too low, however, the response waveform will oscillate.
6. Find the parameter settings that yield the shortest settling time without causing vibration or instability in the position error or torque reference waveform being observed with the analog monitor.
7. The servo gain adjustment procedure is complete when the positioning time cannot be reduced any more.

IMPORTANT

The speed feedback compensation usually makes it possible to increase the speed loop gain and position loop gain. Once the speed loop gain and position loop gain have been increased, the machine may vibrate significantly and may even be damaged if the compensation value is changed significantly or Pn110.1 is set to “1” (i.e., speed feedback compensation disabled).

9.4.9 Switching Gain Settings

Gain switching by the external signal is possible with the SGDH SERVOPACK. For example, to use different gains while the servomotor is running or stopped, set two values in the gain settings 1 and 2 and switch the gains by the external signal.

(1) Gain Switching Input Signal

Type	Signal	Connector Pin No.	Setting	Meaning
Input	/G-SEL	Signal allocation required	OFF: H (high) level	Gain settings 1
			ON: L (low) level	Gain settings 2
To use the input signal, the input terminal must be allocated in the parameter Pn50D. Refer to *7.3.2 Input Circuit Signal Allocation*.				

(2) Switchable Gain Combinations

Turning ON and OFF the gain switching signal /G-SEL switches the gains as follows.

Gain Switching Signal (/G-SEL)	OFF (H Level)	ON (L Level)
Speed loop gain	Pn100	Pn104
Speed loop integral time constant	Pn101	Pn105
Position loop gain	Pn102	Pn106

(3) Related Parameters

Parameter		Function
Pn50A	n.□□□**1**	Enables the input signal allocation for the sequence.
Set to allocate the gain switching signal (/G-SEL) to an input terminal.		

Pn100	Speed Loop Gain		Speed Position Torque	
	Setting Range	Setting Unit	Factory Setting	Setting Validation
	1 to 2,000	Hz	40	Immediately
Pn101	Speed Loop Integral Time Constant		Speed Position Torque	
	Setting Range	Setting Unit	Factory Setting	Setting Validation
	15 to 51,200	0.01 ms	2,000	Immediately
Pn102	Position Loop Gain		Speed Position Torque	
	Setting Range	Setting Unit	Factory Setting	Setting Validation
	1 to 2,000	1/s	40	Immediately
Pn104	2nd Speed Loop Gain		Speed Position Torque	
	Setting Range	Setting Unit	Factory Setting	Setting Validation
	1 to 2,000	Hz	40	Immediately
Pn105	2nd Speed Loop Integral Time Constant		Speed Position Torque	
	Setting Range	Setting Unit	Factory Setting	Setting Validation
	15 to 51,200	0.01 ms	2,000	Immediately
Pn106	2nd Position Loop Gain		Speed Position Torque	
	Setting Range	Setting Unit	Factory Setting	Setting Validation
	1 to 2,000	1/s	40	Immediately

9.4.10 Torque Reference Filter

As shown in the following diagram, the torque reference filter contains torque reference filter time constant (Pn401) and notch filter frequency (Pn409) arrayed in series. The notch filter can be enabled and disabled using the parameters.

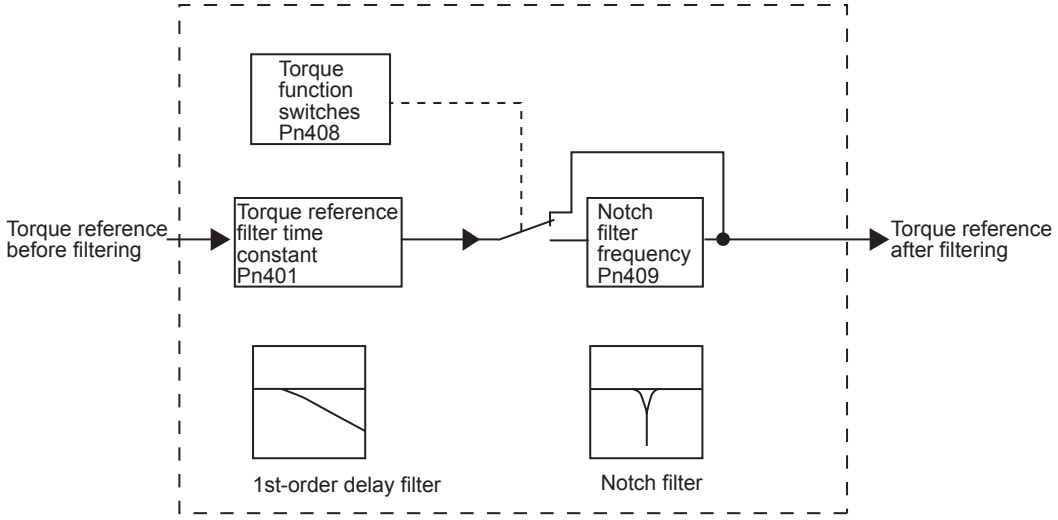

(1) Torque Reference Filter

If you suspect that machine vibration is being caused by the servodrive, try adjusting the filter time constant. This may stop the vibration. The lower the value, the better the speed control response will be, but there is a lower limit that depends on the machine conditions.

Pn401	Torque Reference Filter Time Constant		Speed Position Torque	
	Setting Range	Setting Unit	Factory Setting	Setting Validation
	0 to 65,535 (0.00 to 655.35 ms)	0.01 ms	100	Immediately

(2) Notch Filter

Using the notch filter in accordance with the components of specific vibration frequency such as resonances of ball screw can eliminate the frequency components to stop the vibration.

Parameter		Meaning
Pn408	n.□□□**0**	Disables the notch filter.
	n.□□□**1**	Enables the notch filter.
Enables the notch filter to be used. (The setting is validated immediately.)		

Set the machine's vibration frequency in the parameter of a notch filter to be used.

Pn409	Notch Filter Frequency		Speed Position Torque	
	Setting Range	Setting Unit	Factory Setting	Setting Validation
	50 to 2,000 Hz	Hz	2,000	Immediately

IMPORTANT

1. Sufficient precautions must be taken when setting the notch frequency. Do not set the notch filter frequency (Pn409) that is close to the speed loop's response frequency. Set the frequency at least four times higher than the speed loop's response frequency. Setting the notch filter frequency too close to the response frequency may cause vibration and damage the machine. The speed loop response frequency is the value of the Speed Loop Gain (Pn100) when the Moment of Inertia Ratio (Pn103) is set to the correct value.
2. Change the Notch Filter Frequency (Pn409) only when the servomotor is stopped. Vibration may occur if the notch filter frequency is changed when the servomotor is rotating.

9.5 Analog Monitor

Signals for analog voltage references can be monitored.

To monitor analog signals, connect the analog monitor cable (JZSP-CA01 or DE9404559) to the connector CN5.

The analog monitor signals can be selected by setting parameters Pn003.0 and Pn003.1.

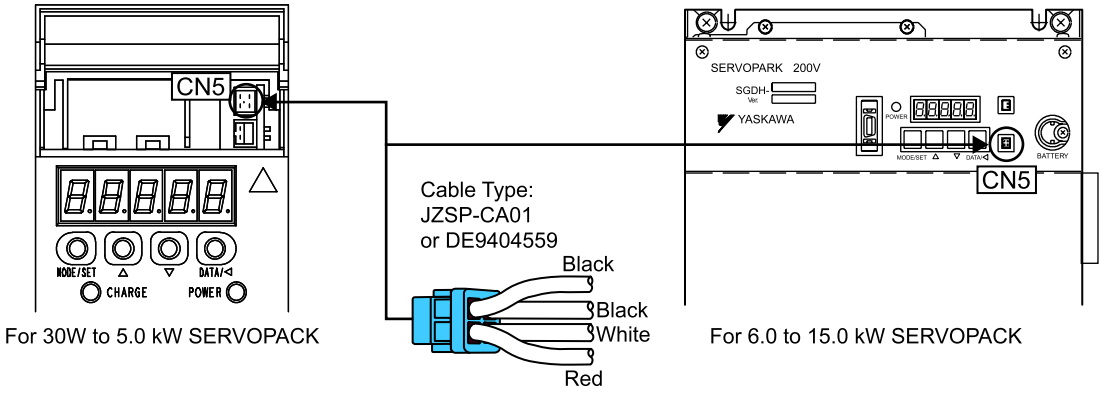

Pin Number	Line Color	Signal Name	Monitoring Item with Factory Setting
1	Red	Analog monitor 2	Motor speed: 1 V/1000 min^{-1}
2	White	Analog monitor 1	Torque reference: 1 V/100% rated torque
3, 4	Black (2 lines)	GND (0 V)	–

- Related Parameters

The following signals can be monitored.

Pn003: Function Selections

	Parameter		Function		
	Monitor 1	Monitor 2	Monitor Signal	Observation Gain	Remarks
Pn003	n.□□□**0**	n.□□**0**□	Motor speed	1 V / 1000 min^{-1}	Factory setting for Monitor 1
	n.□□□**1**	n.□□**1**□	Speed reference	1 V / 1000 min^{-1}	–
	n.□□□**2**	n.□□**2**□	Internal torque reference	1 V / 100% rated torque	Factory setting for Monitor 2
	n.□□□**3**	n.□□**3**□	Position error *	0.05 V / 1 reference unit	–
	n.□□□**4**	n.□□**4**□	Position error *	0.05 V / 100 reference units	–
	n.□□□**5**	n.□□**5**□	Position reference speed (converted to motor speed)	1 V / 1000 min^{-1}	–
	n.□□□**6**	n.□□**6**□	Motor speed	1 V / 250 min^{-1}	–
	n.□□□**7**	n.□□**7**□	Motor speed	1 V / 125 min^{-1}	–
	n.□□□**8**	n.□□**8**□	Reserved. Do not set.	–	–
	n.□□□**9**	n.□□**9**□			–
	n.□□□**A**	n.□□**A**□			–
	n.□□□**B**	n.□□**B**□			–
	n.□□□**C**	n.□□**C**□			–
	n.□□□**D**	n.□□**D**□			–
	n.□□□**E**	n.□□**E**□			–
	n.□□□**F**	n.□□**F**□			–

* When using speed control or torque control, the position error monitor signal is not specified.

INFO

The analog monitor output voltage is ±8 V (maximum). The output will be limited to ±8 V even if this value is exceeded in the above calculations.

9

10

Inspection, Maintenance, and Troubleshooting

10.1 Troubleshooting - 10-2
10.1.1 Alarm Display Table - 10-2
10.1.2 Warning Display - 10-4
10.1.3 Alarm Display Table when the Application Module is Used - - - - - - - 10-5
10.1.4 Warning Display Table when the Application Module is Used - - - - - 10-6
10.1.5 Alarm Display Table when the Linear Motor is Used - - - - - - - - - - - - 10-6
10.1.6 Troubleshooting of Alarm and Warning - 10-7
10.1.7 Troubleshooting for Malfunction without Alarm Display - - - - - - - - 10-17

10.2 Inspection and Maintenance - 10-22
10.2.1 Servomotor Inspection - 10-22
10.2.2 SERVOPACK Inspection - 10-22
10.2.3 SERVOPACK's Parts Replacement Schedule - - - - - - - - - - - - - - - - 10-23

10.1 Troubleshooting

10.1.1 Alarm Display Table

The relation between alarm displays and alarm code outputs is shown in Table 10.1.
If an alarm occurs, the servomotor can be stopped by doing either of the following operations.

- DB STOP: Stops the servomotor immediately using the dynamic brake.
- ZERO-SPEED STOP: Stops the servomotor by setting the speed reference to “0.”

Table 10.1 Alarm Displays and Outputs

Alarm Display	Alarm Name	Meaning	Alarm Reset	Alarm Code Output			Servo Alarm (ALM) Output
				ALO1	ALO2	ALO3	
A.02	Parameter Breakdown	EEPROM data of SERVOPACK is abnormal.	N/A	H	H	H	H
A.03	Main Circuit Encoder Error (Not detected for the SERVOPACKs with the capacity of 6.0 kW or more.)	Detection data for power circuit is abnormal.	Available				
A.04	Parameter Setting Error	The parameter setting is outside the allowable setting range.	N/A				
A.05	Combination Error	SERVOPACK and servomotor capacities do not match each other.	Available				
A.10	Overcurrent or Heat Sink Overheated	An overcurrent flowed through the IGBT. Heat sink of SERVOPACK was overheated.	N/A	L	H	H	H
A.30	Regeneration Error Detected	Regenerative transistor or regenerative resistor is faulty.	Available	L	L	H	H
A.32	Regenerative Overload	Regenerative energy exceeds regenerative resistor capacity.	Available				
A.33	Main Circuit Power Supply Wiring Error	The power supply to the main circuit does not match the parameter Pn001 setting.	Available				
A.40	Overvoltage *	Main circuit DC voltage is excessively high.	Available	H	H	L	H
A.41	Undervoltage *	Main circuit DC voltage is excessively low.	Available				
A.51	Overspeed	The motor speed is excessively high.	Available	L	H	L	H
A.71	Overload: High Load	The motor was operating for several seconds to several tens of seconds under a torque largely exceeding ratings.	Available	L	L	L	H
A.72	Overload: Low Load	The motor was operating continuously under a torque largely exceeding ratings.	Available				
A.73	Dynamic Brake Overload (Not detected for the SERVOPACKs with the capacity of 30 W to 1.0 kW.)	When the dynamic brake was applied, rotational energy exceeded the capacity of dynamic brake resistor.	Available				
A.74	Overload of Surge Current Limit Resistor	The main circuit power was frequently turned ON and OFF.	Available				
A.7A	Heat Sink Overheated (Not detected for the SERVOPACKs with the capacity of 30 W to 1.0 kW.)	The heat sink of SERVOPACK overheated.	Available				

Table 10.1 Alarm Displays and Outputs (Cont'd)

Alarm Display	Alarm Name	Meaning	Alarm Reset	Alarm Code Output			Servo Alarm (ALM) Output
				ALO1	ALO2	ALO3	
A.81	Encoder Backup Error	All the power supplies for the absolute encoder have failed and position data was cleared.	N/A	H	H	H	H
A.82	Encoder Checksum Error	The checksum results of encoder memory is abnormal.	N/A				
A.83	Absolute Encoder Battery Error	Backup battery voltage for the absolute encoder has dropped.	Available				
A.84	Encoder Data Error	Data in the encoder is abnormal.	N/A				
A.85	Encoder Overspeed	The encoder was rotating at high speed when the power was turned ON.	N/A				
A.86	Encoder Overheated	The internal temperature of encoder is too high.	N/A				
A.b1	Reference Speed Input Read Error	The A/D converter for reference speed input is faulty.	Available				
A.b2	Reference Torque Input Read Error	The A/D converter for reference torque input is faulty.	Available				
A.bF	System Alarm	A system error occurred in the SERVOPACK.	N/A				
A.C1	Servo Overrun Detected	The servomotor ran out of control.	Available	L	H	L	H
A.C8	Absolute Encoder Clear Error and Multiturn Limit Setting Error	The multiturn for the absolute encoder was not properly cleared or set.	N/A				
A.C9	Encoder Communications Error	Communications between SERVOPACK and encoder is not possible.	N/A				
A.CA	Encoder Parameter Error	Encoder parameters are faulty.	N/A				
A.Cb	Encoder Echoback Error	Contents of communications with encoder is incorrect.	N/A				
A.CC	Multiturn Limit Disagreement	Different multiturn limits have been set in the encoder and SERVOPACK.	N/A				
A.d0	Position Error Pulse Overflow	Position error pulse exceeded parameter (Pn505).	Available	L	L	H	H
A.E7	Application Module Detection Error	The application module detection fails.	Available	H	L	L	H
A.F1	Power Line Open Phase	One phase is not connected in the main power supply.	Available	H	L	H	H
CPF00	Digital Operator Transmission Error	Digital operator (JUSP-OP02A-2) fails to communicate with SERVOPACK (e.g., CPU error).	N/A	Not decided			
CPF01			N/A				
A.– –	Not an error	Normal operation status	–	H	H	H	L

* The alarm meaning differs depending on the SERVOPACK capacity.

- For the SERVOPACK with a capacity of 5.0 kW or lower:
  A.40: Overvoltage detection alarm
  A.41: Undervoltage detection alarm
- For the SERVOPACK with a capacity of 6.0 kW or higher:
  A.40: Alarm detecting excessively high/low voltage in the main circuit
  A.41: Not used

10.1.2 Warning Display

The relation between warning displays and warning code outputs is shown in table 10.2.

Table 10.2 Warning Displays and Outputs

Warning Display	Warning Name	Meaning	Warning Code Output		
			ALO1	ALO2	ALO3
A.91	Overload	This warning occurs before the overload alarms (A.71 or A.72) occur. If the warning is ignored and operation continues, an overload alarm may occur.	L	H	H
A.92	Regenerative Overload	This warning occurs before the regenerative overload alarm (A.32) occurs. If the warning is ignored and operation continues, a regenerative overload alarm may occur.	H	L	H
A.93	Absolute Encoder Battery Voltage Lowered	This warning occurs when the absolute encoder battery voltage is lowered. If the warning is ignored and operation continues, an overload alarm may occur.	L	L	H

Note: Warning code is not output without setting Pn001 = n.1□□□ (Outputs both Alarm Codes and Warning Codes.)

10.1.3 Alarm Display Table when the Application Module is Used

The following special alarms will occur when the SGDH SERVOPACK and an application module are used together. The relation between alarm displays and alarm code outputs is shown in Table 10.3.

Table 10.3 Alarm Displays and Outputs when the SERVOPACK and an Application Module Is Used Together

Alarm Display	Application Module which Detects Alarms					Alarm Name	Meaning	Alarm Code Output			Servo Alarm (ALM) Output
	NS 100	NS 300	NS 500	NS 600	FC 100			ALO1	ALO2	ALO3	
A.C6	○	○	○	–	○	Fully Closed Encoder Phase A/B Disconnection Alarm	The phase A/B of the fully closed encoder was disconnected.	L	H	L	H
A.C7	○	○	○	–	○	Fully Closed Encoder Phase C Disconnection Alarm	The phase C of the fully closed encoder was disconnected.				
A.d1	○	○	○	–	○	Motor-Load Position Error Over	The motor-load position error over level (Pn51A) was exceeded.	L	L	H	H
A.E0	○	○	○	○	–	No Application Module	No application module installed.	H	L	L	H
A.E1	○	○	○	○	–	Application Module Time-out	No response from the application module.				
A.E2	○	○	○	○	–	Watchdog Counter Error of Application Module	WDC error in the application module				
A.E5	○	–	–	–	–	Watchdog Timer Error	MECHATROLINK synchronization error				
A.E6	○	○	–	–	–	NS100 Communications Error	MECHATROLINK communications error				
						NS300 Duplicate MAC ID Error	Same node address already exists on the DeviceNet network.				
A.E7	○	○	○	○	–	Application Module Detection Error	No application module was detected.				
A.E9	–	○	–	–	–	BUS-OFF Error	Fatal communications error has occurred in DeviceNet communications.				
A.EA	○	○	○	–	–	SERVOPACK Malfunction	SERVOPACK is defective.				
A.EB	○	○	○	–	–	SERVOPACK Initial Access Error	Initial processing failed.				
A.EC	○	○	○	–	–	SERVOPACK WDC Error	SERVOPACK WDC error				
A.ED	○	○	○	–	–	Command Execution Incomplete	Command was interrupted.				
A.EF	–	–	–	○	–	Application Module Error	Some kind of alarm occurred in the NS600.				

Note: 1. The following types of application modules are available:
NS100 (JUSP-NS100): MECHATROLINK I/F application module
NS300 (JUSP-NS300): DeviceNet I/F application module
NS500 (JUSP-NS500): PROFIBUS-DP I/F application module
NS600 (JUSP-NS600): INDEXER application module
FC100 (JUSP-FC100): Fully closed I/F application module

2. For troubleshooting application module alarms, refer to relevant application module manual.
Manual numbers are described in *Related Manuals* on *page v*.

10.1.4 Warning Display Table when the Application Module is Used

The following special warnings will occur when the SGDH SERVOPACK and an application module are used together. The relation between warning displays and warning code outputs is shown in Table 10.4.

Table 10.4 Warning Displays and Outputs when the SERVOPACK and an Application Module Is Used Together

Warning Display	Application Module which Detects Warnings					Warning Name	Meaning	Warning Code Output			Servo Alarm (ALM) Output
	NS 100	NS 300	NS 500	NS 600	FC 100			ALO1	ALO2	ALO3	
A.94	○	○	○	–	–	Data Setting Warning	A value outside the setting range was set using communications.	L	L	H	L
A.95	○	○	○	–	–	Command Warning	A command not supported in the product specifications was issued. The command reception conditions were not met.	H	L	H	L
A.96	○	○	–	–	–	Communications Warning	A communications error occurred (once).	L	H	H	L
A.98	–	○	○	–	–	Main Power OFF	The main power supply is not being supplied.	L	L	L	L
A.9A	–	○	○	–	–	Not Completed within the Set Time	Positioning was not completed within the set time.	L	H	L	L
A.9F	–	–	–	○	–	NS600 Error	Some error occurred in the NS600. Check the NS600 Error Display for details.	L	L	L	L

Note: 1. The following types of application modules are available:
NS100 (JUSP-NS100): MECHATROLINK I/F module
NS300 (JUSP-NS300): DeviceNet I/F module
NS500 (JUSP-NS500): PROFIBUS-DP I/F module
NS600 (JUSP-NS600): INDEXER application module
FC100 (JUSP-FC100): Fully closed I/F module
2. For troubleshooting application module alarms, refer to relevant application module manual.
Manual numbers are described in *Related Manuals* on *page v*.

10.1.5 Alarm Display Table when the Linear Motor is Used

The following special alarms will occur when the SGDH SERVOPACK and an application module are used together. The relation between alarm displays and alarm code outputs is shown in Table 10.5.

Table 10.5 Alarm Displays and Outputs when the SERVOPACK and a Linear Motor Is Used Together

Alarm Display	Alarm Name	Meaning	Alarm Code Output			Servo Alarm (ALM) Output
			ALO1	ALO2	ALO3	
A.08	Scale Pitch Setting Error	The scale pitch parameter is set to zero.	H	H	H	H
A.C2	Phase Detection Error	Phase data exceeds ±30° between the data cycles for serial encoder.	L	H	L	H
		Pole sensor signal error				
A.C5	Pole Detection Error	Pole detection failed.				
A.d3	Exceeded Position Data	Position data is 32 bit or more.	L	L	H	H

10.1.6 Troubleshooting of Alarm and Warning

When an error occurs in servodrive, an alarm display such as A.□□ and CPF□□ or warning display such as A.9□□ appears on the panel operator. However, the display "A.--" is not an alarm. Refer to the following sections to identify the cause of an alarm and the action to be taken.

Contact your Yaskawa representative if the problem cannot be solved by the described corrective action.

(1) Alarm Display and Troubleshooting

Table 10.6 Alarm Display and Troubleshooting

Alarm Display	Alarm Name	Situation at Alarm Occurrence	Cause	Corrective Actions
A.02	Parameter Breakdown (The EEPROM data storing the parameter is incorrect.)	Occurred when the control power supply was turned ON.	The control power supply ranged from 30 VAC to 60 VAC.	Correct the power supply, and set Fn005 to initialize the parameter.
			The power supply was turned OFF while changing the parameter setting. The power supply was turned OFF while an alarm was being written.	Set Fn005 to initialize the parameter and input the parameter again.
			The number of times that parameters were written exceeded the limit. For example, the parameter was changed every scan through the host controller.	Replace the SERVOPACK. (Recheck the parameter writing method.)
			The SERVOPACK EEPROM and the related circuit are faulty.	Replace the SERVOPACK.
A.03	Main Circuit Encoder Error (Not detected for the SERVOPACK with the capacity of 6.0 kW or more)	Occurred when the control power supply was turned ON or during operation	The control power supply ranged from 30 VAC to 60 VAC. A SERVOPACK fault occurred.	Correct the power supply. Replace the SERVOPACK.
A.04	Parameter Setting Error (The parameter setting was out of the allowable setting range.)	Occurred when the control power supply was turned ON.	The incorrect parameter was being loaded. (The incorrect value was rejected as an error at the digital operator.)	Set Fn005 to initialize the parameter.
			The SERVOPACK EEPROM and the related circuit are faulty.	Replace the SERVOPACK.
A.05	Combination Error (The SERVOPACK and servomotor capacities do not correspond.)	Occurred when the control power supply was turned ON.	The SERVOPACK and servomotor capacities do not correspond to each other. Servomotor capacity / SERVOPACK capacity $\leq$ 1/4 or servomotor capacity / SERVOPACK capacity $\geq$ 4	Select the proper combination of SERVOPACK and servomotor capacities.
			The parameter that is written in the encoder is incorrect.	Replace the servomotor (encoder).
			A SERVOPACK board fault occurred.	Replace the SERVOPACK.

Table 10.6 Alarm Display and Troubleshooting (Cont'd)

Alarm Display	Alarm Name	Situation at Alarm Occurrence	Cause	Corrective Actions
A.10	Overcurrent (An overcurrent flowed through the IGBT) or Heat Sink Overheated	Occurred when the control power supply was turned ON.	The overload alarm has been reset by turning OFF the power too many times.	Change the method to reset the alarm.
			The connection is faulty between the SERVOPACK board and the thermostat switch.	Replace the SERVOPACK.
			The SERVOPACK board fault occurred.	
		Occurred when the main circuit power supply was turned ON or when an overcurrent occurred while the servomotor was running.	The connection between grounding and U, V, or W is incorrect.	Check and then correct the wiring.
			The grounding line has contact with other terminals.	
			A short circuit occurred between the grounding and U, V, or W of the servomotor cable.	Repair or replace the servomotor main circuit cable.
			A short circuit occurred between phases U, V, and W of the servomotor.	
			The wiring of the regenerative resistor is incorrect.	Check and then correct the wiring.
			A short circuit occurred between the grounding and U, V, or W of the SERVOPACK.	Replace the SERVOPACK.
			A SERVOPACK fault occurred (current feedback circuit, power transistor or board fault).	
			A short circuit occurred between the grounding and U, V, W of the servomotor.	Replace the servomotor.
			A short circuit occurred between phases U, V, and W of the servomotor.	
			The dynamic brake was activated too frequently, so a DB overload alarm occurred.	Replace the SERVOPACK, and reduce the DB operation frequency.
			The overload alarm has been reset by turning OFF the power too many times.	Change the method to reset the alarm.
			The excessive change was given to the position/speed reference.	Recheck the reference value.
			The overload or regenerative power exceeds the regenerative resistor's capacity.	Reconsider the load and operation conditions.
			The direction or the distance of the SERVOPACK to other devices is incorrect. Heat radiation of the panel or heat around the panel occurred.	The ambient temperature for the SERVOPACK must be 55°C or less.
			A SERVOPACK fan fault occurred.	Replace the SERVOPACK.
			A SERVOPACK fault occurred.	
A.30	Regeneration Error Detected (Detected when the power to the main circuit was turned ON.)	Occurred when the control power supply was turned ON.	A SERVOPACK board fault occurred.	Replace the SERVOPACK.
		Occurred when the main circuit power supply was turned ON.	An external regenerative resistor is not connected for a servomotor of 6.0 kW or more.	Connect an external regenerative resistor.
			Pn600 is set to a value other than 0 for a servomotor of 400 W or less, and an external regenerative resistor is not connected.	Connect an external regenerative resistor, or set Pn600 to 0 if an external regenerative resistor is not connected.
			Check for incorrect wiring or a disconnected wire in the regenerative resistor.	Correct the wiring for the external regenerative resistor.
			A SERVOPACK fault occurred, such as regenerative transistor or a voltage sensor fault.	Replace the SERVOPACK.
			The jumper between B2 and B3 is removed for a servomotor of 500 W or more, and 5.0 kW or less.	Correct the wiring.
		Occurred during normal operation.	Check for incorrect wiring and disconnection of the regenerative resistor.	Correct the wiring for the external regenerative resistor.
			The regenerative resistor is disconnected, so the regenerative energy became excessive.	Replace the regenerative resistor or replace the SERVOPACK. Reconsider the load and operation conditions.
			A SERVOPACK fault, such as regenerative transistor and voltage sensor fault, occurred.	Replace the SERVOPACK.

Table 10.6 Alarm Display and Troubleshooting (Cont'd)

Alarm Display	Alarm Name	Situation at Alarm Occurrence	Cause	Corrective Actions
A.32	Regenerative Overload (Detected when the power to the main circuit is turned ON.)	Occurred when the control power supply was turned ON.	A SERVOPACK board fault occurred.	Replace the SERVOPACK.
		Occurred when the main circuit power supply was turned ON.	The power supply voltage is 270 V or more.	Correct the input voltage.
		Occurred during normal operation (large increase of regenerative resistor temperature).	The regenerative energy is excessive.	Select a proper regenerative resistance capacity, or reconsider the load and operation conditions.
			The regenerating state continued.	
		Occurred during normal operation (small increase of regenerative resistor temperature).	The setting of parameter Pn600 is smaller than the external regenerative resistor's capacity.	Correct the set value of parameter Pn600.
			A SERVOPACK fault occurred.	Replace the SERVOPACK.
		Occurred at servomotor deceleration.	The regenerative energy is excessive.	Select a proper regenerative resistance capacity, or reconsider the load and operation conditions.
A.33	Main Circuit Wiring Error (Detected when the power to the main circuit is turned ON.)	Occurred when the control power supply was turned ON.	A SERVOPACK board fault occurred.	Replace the SERVOPACK.
		Occurred when the main circuit power supply was turned ON.	In the DC power input mode, AC power is supplied through L1 and L2 or L1, L2, and L3.	For AC power input, Pn001.2=0. For DC power input, Pn001.2=1.
			In the AC power input mode, DC power is supplied through ⊕1 and ⊖ terminals.	
			Pn600 is set to 0 if the regenerative resistance is disconnected.	Set Pn600 to 0.
A.40	Overvoltage*1 (Detected when the SERVOPACK's main circuit DC voltage is 420 V or more.) (Detected when the power to the main circuit is turned ON.)	Occurred when the control power supply was turned ON.	A SERVOPACK board fault occurred.	Replace the SERVOPACK.
		Occurred when the main circuit power supply was turned ON.	The AC power voltage is too high.	The AC power voltage must be within the specified range.
			A SERVOPACK fault occurred.	Replace the SERVOPACK.
		Occurred during normal operation.	Check the AC power voltage (check if there is no excessive voltage change.)	The AC power voltage must be within the specified range.
			The motor speed is high and load moment of inertia is excessive, resulting in insufficient regenerative capacity.	Check the load moment of inertia and minus load specifications. Reconsider the load and operation conditions.
			A SERVOPACK fault occurred.	Replace the SERVOPACK.
		Occurred at servomotor deceleration.	The motor speed is high, and the load moment of inertia is excessive.	Reconsider the load and operation conditions.

Table 10.6 Alarm Display and Troubleshooting (Cont'd)

Alarm Display	Alarm Name	Situation at Alarm Occurrence	Cause	Corrective Actions
A.41	Undervoltage*1 (Detected when the SERVOPACK's main circuit DC voltage is 170 V or less.) (Detected when the power to the main circuit is turned ON.)	Occurred when the control power supply was turned ON.	A SERVOPACK board fault occurred.	Replace the SERVOPACK.
		Occurred when the main circuit power supply was turned ON.	The AC power supply voltage is low.	The AC power supply voltage must be within the specified range.
			The fuse of the SERVOPACK is blown out.	Replace the SERVOPACK.
			The surge current limit resistor is disconnected, resulting in an abnormal power supply voltage or in an overload of the surge current limit resistor.	Replace the SERVOPACK. Check the power supply voltage, and reduce the number of times that the main circuit is turned ON or OFF.)
			A SERVOPACK fault occurred.	Replace the SERVOPACK.
		Occurred during normal operation.	The AC power supply voltage was lowered, and large voltage drop occurred.	The AC power supply voltage must be within the specified range.
			A temporary power failure occurred.	Clear and reset the alarm, and restart the operation.
			The servomotor main circuit cable is short-circuited.	Repair or replace the servomotor main circuit cable.
			The servomotor is short-circuited.	Replace the servomotor.
			A SERVOPACK fault occurred.	Replace the SERVOPACK.
A.51	Overspeed (Detected when the feedback speed is the maximum motor speed × 1.2 or more for the SGMGH servomotor, and × 1.1 or more for the other servomotors.)	Occurred when the control power supply was turned ON.	A SERVOPACK board fault occurred.	Replace the SERVOPACK.
		Occurred when servo was ON.	The order of phases U, V, and W in the servomotor wiring is incorrect.	Correct the servomotor wiring.
			The encoder wiring is incorrect.	Correct the encoder wiring.
			Malfunction occurred due to noise interference in the encoder wiring.	Take measures against noise for the encoder wiring.
			A SERVOPACK fault occurred.	Replace the SERVOPACK.
		Occurred when the servomotor started running or in a high-speed rotation.	The order of phases U, V, and W in the servomotor wiring is incorrect.	Correct the servomotor wiring.
			The encoder wiring is incorrect.	Correct the encoder wiring.
			Malfunction occurred due to noise interference in the encoder wiring.	Take measures against noise for the encoder wiring.
			The position or speed reference input is too large.	Reduce the reference value.
			The setting of the reference input gain is incorrect.	Correct the reference input gain setting.
			A SERVOPACK board fault occurred.	Replace the SERVOPACK.
A.71 A.72	A.71: High Load A.72: Low Load	Occurred when the control power supply was turned ON.	A SERVOPACK board fault occurred.	Replace the SERVOPACK.
		Occurred when the servo was ON.	The servomotor wiring is incorrect or the connection is faulty.	Correct the servomotor wiring.
			The encoder wiring is incorrect or the connection is faulty.	Correct the encoder wiring.
			A SERVOPACK fault occurred.	Replace the SERVOPACK.
		Occurred when the servomotor did not run by the reference input.	The servomotor wiring is incorrect or the connection is faulty.	Correct the servomotor wiring.
			The encoder wiring is incorrect or the connection is faulty.	Correct the encoder wiring.
			The starting torque exceeds the maximum torque.	Reconsider the load and operation conditions, or reconsider the servomotor capacity.
			A SERVOPACK fault occurred.	Replace the SERVOPACK.
		Occurred during normal operation.	The actual torque exceeds the rated torque or the starting torque largely exceeds the rated torque.	Reconsider the load and operation conditions, or reconsider the servomotor capacity.
			Temperature in the SERVOPACK panel is high.	Reduce the in-panel temperature to 55° or less.
			A SERVOPACK fault occurred.	Replace the SERVOPACK.

Table 10.6 Alarm Display and Troubleshooting (Cont'd)

Alarm Display	Alarm Name	Situation at Alarm Occurrence	Cause	Corrective Actions
A.73	Dynamic Brake Overload	Occurred when the control power supply was turned ON.	A SERVOPACK board fault occurred.	Replace the SERVOPACK.
		Occurred when the servomotor was running and in a status other than servo OFF.	A SERVOPACK board fault occurred.	Replace the SERVOPACK.
		Occurred when the servomotor was running in servo OFF status.	The rotating energy at a DB stop exceeds the DB resistance capacity.	①Reduce the motor speed, ②Reduce the load moment of inertia, or ③Reduce the number of times of the DB stop operation.
			A SERVOPACK fault occurred.	Replace the SERVOPACK.
A.74	Overload of Surge Current Limit Resistor (Detected when the number of times that the main circuit's power is turned ON or OFF more than 10 times/2 seconds.)	Occurred when the control power supply was turned ON.	A SERVOPACK board fault occurred.	Replace the SERVOPACK.
		Occurred during operations other than the turning ON/OFF of the main circuit.	A SERVOPACK board fault occurred.	Replace the SERVOPACK.
		Occurred at the main circuit power supply ON/OFF operation.	The surge current limit resistor operation frequency at the main circuit power supply ON/OF operation exceeds the allowable range.	Reduce the number of times that main circuit's power supply can be turned ON/OFF to 5 times/min. or less.
			A SERVOPACK fault occurred.	Replace the SERVOPACK.
A.7A	Heat Sink Overheated (Detected when the heat sink temperature exceeds 100 × °C.)	Occurred when the control power supply was turned ON.	A SERVOPACK fault occurred.	Replace the SERVOPACK.
			The overload alarm has been reset by turning OFF the power too many times.	Change the method to reset the alarm.
		Occurred when the main circuit power supply was turned ON or while the servomotor was running.	The load exceeds the rated load.	Reconsider the load and operation conditions, or reconsider the servomotor capacity.
			The SERVOPACK ambient temperature exceeds 55°C.	The ambient temperature must be 55°C or less.
			A SERVOPACK fault occurred.	Replace the SERVOPACK.
A.81	Encoder Backup Error (Detected on the encoder side.) (Only when an absolute encoder is connected.)	Occurred when the control power supply was turned ON. (Setting: Pn002.2=1)	A SERVOPACK board fault occurred when an absolute encoder is used with the setting for incremental encoder.	Replace the SERVOPACK.
		Occurred when the control power supply was turned ON using an absolute encoder. (Setting: Pn002.2=0)	Alarm occurred when the power to the absolute encoder was initially turned ON.	Set up the encoder.
			The encoder cable had been disconnected once.	First confirm the connection and set up the encoder.
			The power from both the PG power supply (+5 V) and the battery power supply from the SERVOPACK is not being supplied.	Replace the battery or take similar measures to supply power to the encoder, and set up the encoder.
			An absolute encoder fault occurred.	If the alarm cannot be reset by setting up the encoder again, replace the encoder.
			A SERVOPACK fault occurred.	Replace the SERVOPACK.
A.82	Encoder Checksum Error (Detected on the encoder side.)	Occurred when the control power supply was turned ON or during an operation.	A fault occurred in the encoder and was detected by encoder self-diagnosis.	Set up the encoder. If this alarm occurs frequently, replace the servomotor.
			A SERVOPACK fault occurred.	Replace the SERVOPACK.
		Occurred when the SEN signal turned ON.	A fault occurred in the encoder and was detected by encoder self-diagnosis.	Set up the encoder. If this alarm occurs frequently, replace the servomotor.

Table 10.6 Alarm Display and Troubleshooting (Cont'd)

Alarm Display	Alarm Name	Situation at Alarm Occurrence	Cause	Corrective Actions
A.83	Absolute Encoder Battery Error (Detected when the battery voltage is lower than the specified value 2 to 4 s after the control power supply is turned ON.) (Only when an absolute encoder is connected.)	When the control power supply was turned ON. (Setting: Pn002.2=1)	When the absolute encoder was used as an incremental, a SERVOPACK board fault occurred.	Replace the SERVOPACK.
		When the control power supply was turned ON using an absolute encoder. (Setting: Pn002.2=0)	The battery connection is incorrect.	Reconnect the battery.
			The battery voltage is lower than the specified value 2.7 V.	Replace the battery, and then turn ON the power to the encoder.
			A SERVOPACK board fault occurred.	Replace the SERVOPACK.
A.84	Encoder Data Error (Detected on the encoder side.)	Occurred when the control power supply was turned ON.	A malfunction occurred in the encoder.	Turn the encoder power supply OFF and then ON again. If this alarm occurs frequently, replace the servomotor.
			A SERVOPACK board fault occurred.	Replace the SERVOPACK.
		Occurred during normal operation.	A malfunction occurred in the encoder due to external noise.	Correct the wiring around the encoder by separating the encoder cable from the power line, or by checking the grounding and other wiring.)
			An encoder fault occurred.	If this alarm occurs frequently, replace the servomotor.
			A SERVOPACK board fault occurred.	Replace the SERVOPACK.
A.85	Encoder Overspeed (Detected when the encoder power supply was turned ON.) (Detected on the encoder side.)	Occurred when the control power supply was turned ON.	When the encoder power supply turns ON and the SEN signal is ON when using an absolute encoder, the servomotor runs at 200 min^{-1} or more.	Turn ON the encoder power supply when the servomotor runs at a speed less than 200 min^{-1}.
			An encoder fault occurred.	Replace the servomotor.
			A SERVOPACK board fault occurred.	Replace the SERVOPACK.
		Occurred during normal operation.	An encoder fault occurred.	Replace the servomotor.
			A SERVOPACK board fault occurred.	Replace the SERVOPACK.
A.86	Encoder Overheated (Only when an absolute encoder is connected.) (Detected on the encoder side.)	Occurred when the control power supply was turned ON.	An encoder fault occurred.	Replace the servomotor.
			A SERVOPACK board fault occurred.	Replace the SERVOPACK.
		Occurred during normal operation.	The ambient temperature around the servomotor is too high.	The ambient temperature must be 40°C or less.
			The servomotor load is greater than the rated load.	The servomotor load must be within the specified range.
			An encoder fault occurred.	Replace the servomotor.
			A SERVOPACK board fault occurred.	Replace the SERVOPACK.
A.b1	Reference Speed Input Read Error (Detected when the Servo is ON.)	Occurred when the control power supply was turned ON.	A SERVOPACK board fault occurred.	Replace the SERVOPACK.
		Occurred during normal operation.	A malfunction occurred in reading section of the speed reference input.	Clear and reset the alarm and restart the operation.
			A SERVOPACK board fault occurred.	Replace the SERVOPACK.
A.b2	Reference Torque Input Read Error (Detected when the servo is ON.)	Occurred when the control power supply was turned ON.	A SERVOPACK board fault occurred.	Replace the SERVOPACK.
			A malfunction occurred in the reading section of the torque reference input.	Clear and reset the alarm and restart the operation.
		Occurred during normal operation.	A SERVOPACK board fault occurred.	Replace the SERVOPACK.

Table 10.6 Alarm Display and Troubleshooting (Cont'd)

Alarm Display	Alarm Name	Situation at Alarm Occurrence	Cause	Corrective Actions
A.bF	System Alarm (Program error) • Software operation time exceeded • Stack overflow • Micro program error	Occurred when the control power supply was turned ON.	A SERVOPACK board fault occurred.	Replace the SERVOPACK.
		Occurred during normal operation.	A program is incorrect.	Replace the SERVOPACK. (Contact your Yaskawa representative.)
			A SERVOPACK board fault occurred.	Replace the SERVOPACK.
A.C1	Servo Overrun Detected (Detected when the servo is ON.)	Occurred when the control power supply was turned ON.	A SERVOPACK board fault occurred.	Replace the SERVOPACK.
		Occurred when the servo was ON or a reference was input.	The order of phase U, V, and W in the servomotor wiring is incorrect.	Correct the servomotor wiring.
			An encoder fault occurred.	Replace the servomotor.
			A SERVOPACK fault occurred.	Replace the SERVOPACK.
A.C8	Absolute Encoder Clear Error and Multi-turn Limit Setting Error	Occurred when the control power supply was turned ON.	An encoder fault occurred.	Replace the servomotor.
			A SERVOPACK board fault occurred.	Replace the SERVOPACK.
		Occurred when an encoder alarm was cleared and reset.	An encoder fault occurred.	Replace the servomotor.
			A SERVOPACK board fault occurred.	Replace the SERVOPACK.
A.C9	Encoder Communications Error	Occurred when the control power supply was turned ON or during operation.	The encoder wiring and the contact are incorrect.	Correct the encoder wiring.
			Noise interference occurred due to incorrect encoder cable specifications.	Use tinned annealed copper twisted-pair or twisted-pair shielded wire with a core of at least 0.12 mm^2 (0.0002 in^2).
			Noise interference occurred because the wiring distance for the encoder cable is too long.	The wiring distance must be 20m (65.6 ft) max.
			The noise interference occurred on the signal line because the encoder cable is bent and the sheath is damaged.	Correct the encoder cable layout.
			The encoder cable is bundled with a high-current line or near a high-current line.	Correct the encoder cable layout so that no surge is applied.
			The FG electrical potential varies because of the influence from such machines on the servomotor side as welders.	Ground the machine separately from PG side FG.
			Noise interference occurred on the signal line from the encoder.	Take a measure against noise for the encoder wiring.
			Excessive vibration and shocks were applied to the encoder.	Reduce the machine vibration or mount the servomotor securely.
			An encoder fault occurred.	Replace the servomotor.
			A SERVOPACK board fault occurred.	Replace the SERVOPACK.
A.CA	Encoder Parameter Error	Occurred when the control power supply was turned ON.	An encoder fault occurred.	Replace the servomotor.
			A SERVOPACK board fault occurred.	Replace the SERVOPACK.

Table 10.6 Alarm Display and Troubleshooting (Cont'd)

Alarm Display	Alarm Name	Situation at Alarm Occurrence	Cause	Corrective Actions
A.Cb	Encoder Echoback Error	Occurred when the control power supply was turned ON or during operation.	The encoder wiring and contact are incorrect.	Correct the encoder wiring.
			Noise interference occurred due to incorrect encoder cable specifications.	Use tinned annealed copper twisted-pair or twisted-pair shielded wire with a core of at least 0.12 mm^2 (0.0002 in^2).
			Noise interference occurred because the wiring distance for the encoder cable is too long.	The wiring distance must be 20m (65.6 ft) max.
			Noise interference occurred on the signal line, because the encoder cable is bent and the sheath is damaged.	Correct the encoder cable layout.
			The encoder cable is bundled with a high-current line or near a high-current line.	Correct the encoder cable layout so that no surge is applied.
			The FG electrical potential varies because of the influence from such machines on the servomotor side as welders.	Ground the machine separately from PG side FG.
			Noise interference occurred on the signal line from the encoder.	Take measures against noise for the encoder wiring.
			Excessive vibration and shocks to the encoder was applied.	Reduce the machine vibration or mount the servomotor securely.
			An encoder fault occurred.	Replace the servomotor.
			A SERVOPACK board fault occurred.	Replace the SERVOPACK.
A.CC	Multiturn Limit Disagreement	Occurred when the control power supply was turned ON.	The parameter settings for the SERVOPACK are incorrect.	Correct the setting of Pn205 (0 to 65535).
			The multiturn limit value for the encoder is not set or was changed.	Execute Fn013 at the occurrence of alarm.
		Occurred during normal operation.	A SERVOPACK board fault occurred.	Replace the SERVOPACK.
A.d0	Position Error Pulse Overflow (In servo ON status, the position error pulses exceed the overflow level set in the parameter Pn505.)	Occurred when the control power supply was turned ON.	The overflow level (Pn505) is incorrect.	Make the value set in the Pn505 to other than 0.
			A SERVOPACK board fault occurred.	Replace the SERVOPACK.
		Occurred at the servomotor high-speed rotation.	The contact in the servomotor U, V, and W wirings is faulty.	Correct the servomotor wiring.
				Correct the encoder wiring.
			A SERVOPACK board fault occurred.	Replace the SERVOPACK.
		The servomotor did not run with position reference input.	Wirings of the servomotor U, V, and W are incorrect.	Correct the servomotor wiring.
			A SERVOPACK board fault occurred.	Replace the SERVOPACK.
		Normal movement, but occurred with a long distance reference input.	The SERVOPACK gain adjustment is improper.	Increase the speed loop gain (Pn100) and position loop gain (Pn102).
			The V-REF input voltage and the Pn300 setting are incorrect.	Lower the reference speed to the speed limit value.
			The position reference pulse frequency is too high.	Adjust slowly the position reference pulse frequency.
				Apply the smoothing function.
				Correct the electronic gear ratio.
			Setting of the position error pulse overflow alarm level (Pn505) is incorrect.	Set the parameter Pn505 to proper value.
			The servomotor specifications do not meet the load conditions such as torque and moment of inertia.	Reconsider and correct the load and servomotor capacity.

Table 10.6 Alarm Display and Troubleshooting (Cont'd)

Alarm Display	Alarm Name	Situation at Alarm Occurrence	Cause	Corrective Actions
A.F1	Power Line Open Phase (In the main power supply ON status, the voltage stays low for 1 second or more at one of the phases R, S, and T.) (Detected when the main circuit power supply turns ON.)	Occurred when the control power supply was turned ON.	A SERVOPACK fault occurred.	Replace the SERVOPACK.
		Occurred when the main circuit power supply was turned ON.	The three-phase power supply wiring is incorrect.	Correct the power supply wiring.
			The three-phase power supply is unbalanced.	Balance the power supply by changing phases.
			A SERVOPACK fault occurred.	Replace the SERVOPACK.
		Occurred when the servomotor was running.	The contact in three-phase power supply wiring is faulty.	Correct the power supply wiring.
			Three-phase power supply is unbalanced.	Balance the power supply.
			A SERVOPACK fault occurred.	Replace the SERVOPACK.
CPF00	Digital Operator Transmission Error 1 *2	Occurred when the power supply was turned ON with digital operator connected or when connecting digital operator with the power supply was turned ON.	The contact between the digital operator and the SERVOPACK is faulty.	Insert securely the connector, or replace the cable.
			The external noise interference occurred to the digital operator or cable. (The digital operator cable is near noise source.)	Do not lay the cable near noise source.
				Install digital operator far from noise source.
CPF01	Digital Operator Transmission Error 2 *3		A digital operator fault occurred.	Replace the digital operator.
			A SERVOPACK fault occurred.	Replace the SERVOPACK.

* 1. The alarm meaning differs depending on the SERVOPACK capacity.

- For the SERVOPACK with a capacity of 5.0 kW or lower:
  A.40: Overvoltage detection alarm
  A.41: Undervoltage detection alarm
- For the SERVOPACK with a capacity of 6.0 kW or higher:
  A.40: Alarm detecting excessively high/low voltage in the main circuit
  A.41: Not used

* 2. This alarm occurs when the communications is still disabled five seconds after digital operator power supply is ON, or when digital operator communications disabled status stays while an application module is connected.

* 3. This alarm occurs when digital operator received data error occurs consecutively five times, or when the state that digital operator receives no data from SERVOPACK for one second or more occurs consecutively three times.

(2) Warning Display and Troubleshooting

Table 10.7 Warning Display and Troubleshooting

Warning Display	Warning Name	Situation at Warning Occurrence	Cause	Corrective Actions
A.91	Overload: Warning for the alarms A71 and A72 In either of the following cases: 1. 20% of the overload detection level of A71 2. 20% of the overload detection level of A72.	Occurs when the servo was ON.	Wiring is incorrect and the contact in servomotor wiring is faulty.	Correct the servomotor wiring.
			Wiring is incorrect and the contact in encoder wiring is faulty.	Correct the encoder wiring.
			A SERVOPACK fault occurred.	Replace the SERVOPACK.
		The servomotor did not run with a reference input.	Servomotor wiring is incorrect and the contact is faulty.	Correct the servomotor wiring.
			Encoder wiring is incorrect and the contact is faulty.	Correct the encoder wiring.
			The starting torque exceeds the maximum torque.	Reconsider the load and operation conditions. Or, check the servomotor capacity.
			A SERVOPACK fault occurred.	Replace the SERVOPACK.
		Occurred during normal operation.	The effective torque exceeds the rated torque.	Reconsider the load and operation conditions. Or, check the servomotor capacity.
			Temperature in the SERVOPACK panel is high.	Reduce the in-panel temperature to 55°C or less.
			A SERVOPACK fault occurred.	Replace the SERVOPACK.
A.92	Regenerative Overload: Warning for the alarm A320	Occurred when the control power supply was turned ON.	A SERVOPACK fault occurred.	Replace the SERVOPACK.
		Occurred during normal operation (Large increase of regenerative resistor temperature.)	Regenerative energy is excessive.	Check the regenerative resistor capacity, or reconsider the load and operation conditions.
			Regenerative status continues.	
		Occurred during normal operation (Small increase of regenerative resistor temperature).	The setting of parameter Pn600 is smaller than the external regenerative resistor capacity.	Correct the setting of parameter Pn600.
			A SERVOPACK fault occurred.	Replace the SERVOPACK.
		Occurred at servomotor deceleration.	Regenerative energy is excessive.	Check the regenerative resistor capacity, or reconsider the load and operation conditions.
A.93	Absolute Encoder Battery Warning (The battery voltage stays below the specified value 4 seconds after the control power supply was turned ON.) (Only when an absolute encoder is connected.)	Occurred when the control power supply was turned ON (Setting: Pn002.2=1).	A SERVOPACK board fault occurred. (The absolute encoder is used in the incremental encoder setting.)	Replace the SERVOPACK.
		Occurred 4 seconds or more after the control power supply was turned ON (Setting: Pn002.2=0). When an absolute encoder was used.	The battery connection is incorrect or faulty.	Connect correctly the battery.
			The battery voltage is lower than the specified value 2.7 V.	Replace the battery, and turn OFF the encoder power supply and ON again.
			A SERVOPACK board fault occurred.	Replace the SERVOPACK.

10.1.7 Troubleshooting for Malfunction without Alarm Display

The troubleshooting for the malfunctions that causes no alarm display is listed below.
Contact your Yaskawa representative if the problem cannot be solved by the described corrective actions.

Table 10.8 Troubleshooting for Malfunction without Alarm Display

Symptom	Cause	Inspection	Corrective Actions
		■: Turn OFF the servo system before executing operations.	
Servomotor Does Not Start	The control power supply is not ON.	Check voltage between control power supply terminals.	Correct the control power circuit.
	The main circuit power supply is not ON.	Check the voltage between power supply terminals.	Correct the power circuit.
	Wrong wiring or disconnection of I/O signal connector CN1	Check if the connector CN1 is properly inserted and connected.	Correct the connector CN1 connection.
	Servomotor or encoder wiring disconnected.	Check the wiring.	Correct the wiring.
	Overloaded	Run under no load.	Reduce load or replace with larger capacity servomotor.
	Speed/position references not input	Check reference input pins.	Input speed/position references correctly.
	Setting for Pn50A to Pn50D “Input Signal Selection” is incorrect.	Check settings of parameters Pn50A to Pn50D.	Correct the settings for Pn50A to Pn50D “Input Signal Selection.”
	Encoder type differs from parameter setting.	Check incremental or absolute encoder.	Set parameter Pn002.2 to the encoder type being used.
	/S-ON input signal stays OFF.	Check settings of parameters Pn50A.0 and Pn50A.1.	Correct the parameter setting and turn ON /S-ON input signal.
	/P-CON input function setting is incorrect.	Check parameter Pn001.1.	Set parameters to match the application.
	SEN input is turned OFF.	Check the SEN signal input (when absolute encoder is used).	Turn SEN input signal ON.
	Reference pulse mode selection is incorrect.	Check the parameter setting for the reference pulse mode.	Correct setting of parameter Pn200.0.
	Speed control: Speed reference input is incorrect.	Check V-REF and SG to confirm if the control method and the input are agreed.	Correct the control mode selection parameter, or the input.
	Torque control: Torque reference input is incorrect.	Check V-REF and SG to confirm if the control method and the input are agreed.	Correct the control mode selection parameter, or the input.
	Position control: Reference pulse input is incorrect.	Check Pn200.0 reference pulse form or sign + pulse signal.	Correct the control mode selection parameter, or the input.
	The error clear counter (CLR) input is turned ON.	Check CLR or /CLR input pins (CN1-14 and -15).	Turn CLR or /CLR input signal OFF.
	The forward run prohibited (P-OT) or reverse run prohibited (N-OT) input signal is turned OFF.	Check P-OT or N-OT input signal.	Turn P-OT or N-OT input signal ON.
	A SERVOPACK fault occurred.	A SERVOPACK board fault occurred.	Replace the SERVOPACK.
Servomotor Moves Instantaneously, and then Stops	Servomotor wiring is incorrect.	Check the servomotor wiring.	Correct the servomotor wiring.
	Encoder wiring is incorrect.	Check the encoder wiring.	Correct the encoder wiring.
Servomotor Suddenly Stops during Operation and will Not Restart	An alarm occurred while alarm reset signal (ALM-RST) was turned ON.	Check the alarm reset signal.	Remove the cause of alarm. Turn alarm reset signal (ALM-RST) from ON to OFF.
Servomotor Speed Unstable	Wiring connection to servomotor is defective.	Check connection of power lead (phases U, V, and W) and encoder connectors.	Tighten any loose terminals or connectors.

Table 10.8 Troubleshooting for Malfunction without Alarm Display (Cont'd)

Symptom	Cause	Inspection	Corrective Actions
		■: Turn OFF the servo system before executing operations.	
Servomotor Rotates Without Reference Input	Speed control: Speed reference input is incorrect.	Check V-REF and SG to confirm if the control method and the input are agreed.	Correct the control mode selection parameter, or the input correctly.
	Torque control: Torque reference input is incorrect.	Check V-REF and SG to confirm if the control method and the input are agreed.	Correct the control mode selection parameter, or the input correctly.
	Speed reference offset is error.	The SERVOPACK offset is adjusted incorrectly.	Adjust the SERVOPACK offset correctly.
	Position control: Reference pulse input is incorrect.	Check Pn200.0 reference pulse form or sign + pulse signal.	Correct the control mode selection parameter, or the input correctly.
	A SERVOPACK fault occurred.	A SERVOPACK board fault occurred.	Replace the SERVOPACK.
DB (dynamic brake) Does Not Operate	Improper parameter setting	Check the setting of parameter Pn001.0.	Correct the parameter setting.
	DB resistor disconnected	Check if excessive moment of inertia, motor overspeed, or DB frequently activated occurred.	Replace the SERVOPACK, and reconsider the load.
	DB drive circuit fault	DB circuit parts are faulty.	Replace the SERVOPACK.
Abnormal Noise from Servomotor	Mounting not secured	Check if there are any loosen mounting screws.	Tighten the mounting screws.
		Check if there are misalignment of couplings.	Align the couplings.
		Check if there are unbalanced couplings.	Balance the couplings.
	Defective bearings	Check for noise and vibration around the bearings.	If any problems, contact your Yaskawa representative.
	Vibration source on the driven machine	Any foreign matter, damages, or deformation on the machine movable section.	Contact the machine manufacturer.
	Noise interference due to incorrect input signal wire specifications	The specifications of input signal wires must be: Twisted-pair or twisted-pair shielded wire with core 0.12 mm^2 (0.0002 in^2) min. and tinned annealed copper twisted wire.	Use the specified input signal wires.
	Noise interference due to long distance of input signal line	The wiring distance must be 3 m (9.84 ft) max. and the impedance a few hundreds ohm max.	Shorten the wiring distance for input signal line to the specified value.
	Noise interference due to incorrect encoder cable specifications	The specifications of encoder cable must be: Twisted-pair or twisted-pair shielded wire with core 0.12 mm^2 (0.0002 in^2) min. and tinned annealed copper twisted wire.	Use the specified encoder cable.
	Noise interference due to long encoder cable wiring distance	The wiring distance must be 20 m(65.6 ft) max.	Shorten the encoder cable wiring distance to the specified value.
	Noise due to damaged encoder cable	Check if the encoder cable is not damaged or bent.	Modify the encoder cable layout.
	Excessive noise to the encoder cable	Check if the encoder cable is bundled with high-current line or near the high-current line.	Install a surge suppressor to the encoder cable.
	FG electrical potential varies by influence of such machines on the servomotor side as welders.	Check if the machine is correctly grounded.	Ground the machine separately from PG side FG.
	SERVOPACK pulse counting error due to noise	Check if there is noise interference on the signal line from encoder.	Take measure against noise for the encoder wiring.
	Excessive vibration and shock to the encoder	Vibration from the machine occurred or servomotor installation is incorrect. (Mounting surface accuracy, fixing, alignment, etc.)	Reduce vibration from the machine, or secure the servomotor installation.
	Encoder fault	An encoder fault occurred.	Replace the servomotor.

Table 10.8 Troubleshooting for Malfunction without Alarm Display (Cont'd)

Symptom	Cause	Inspection	Corrective Actions
		■: Turn OFF the servo system before executing operations.	
Servomotor Vibrates at about 200 to 400 Hz	Speed loop gain value (Pn100) too high.	Factory setting: Kv=40.0 Hz Refer to *9.3.2 Servo Gain Manual Tuning*.	Reduce speed loop gain (Pn100) preset value.
	Position loop gain value (Pn102) too high	Factory setting: Kp=40.0/s Refer to *9.3.2 Servo Gain Manual Tuning*.	Reduce position loop gain (Pn102) preset value.
	Incorrect speed loop integral time constant (Pn101) setting	Factory setting: Ti=20.00 ms Refer to *9.3.2 Servo Gain Manual Tuning*.	Correct the speed loop integral time constant (Pn101) setting.
	When the autotuning is used: Incorrect machine rigidity setting	Check the machine rigidity setting (Fn001).	Select a proper machine rigidity setting (Fn001).
	When the autotuning is not used: Incorrect rotational moment of inertia ratio data	Check the rotational moment of inertia ratio data (Pn103).	Correct the rotational moment of inertia ratio data (Pn103).
High Rotation Speed Overshoot on Starting and Stopping.	Speed loop gain value (Pn100) too high	Factory setting: Kv=40.0 Hz Refer to the gain adjustment in User's Manual.	Reduce the speed loop gain (Pn100) preset value.
	Position loop gain value (Pn102) too high	Factory setting: Kp=40.0/s Refer to the gain adjustment in User's Manual.	Reduce the position loop gain (Pn102) preset value.
	Incorrect speed loop integral time constant (Pn101) setting	Factory setting: Ti=20.00 ms Refer to the gain adjustment in User's Manual.	Correct the speed loop integral time constant (Pn101) setting.
	When the autotuning is used: Incorrect machine rigidity setting	Check the machine rigidity setting (Fn001).	Select a proper machine rigidity setting (Fn001).
	When the autotuning is not used: Incorrect rotational moment of inertia ratio data	Check the rotational moment of inertia ratio data (Pn103).	Correct the rotational moment of inertia ratio data (Pn103).
			Use the mode switch setting function.
Absolute Encoder Position Difference Error (The position saved in host controller when the power turned OFF is different from the position when the power turned ON.)	Noise interference due to improper encoder cable specifications	The specifications of encoder cable must be: Twisted-pair or twisted-pair shielded wire with core 0.12 mm^2 (0.0002 in^2) min. and tinned annealed copper twisted wire.	Use encoder cable with the specified specifications.
	Noise interference because the encoder cable distance is too long.	The wiring distance must be 20 m (65.6 ft) max.	The encoder cable distance must be within the specified range.
	Noise interference due to damaged encoder cable	Noise interference occurred to the signal line because the encoder cable is bent or its sheath damaged.	Correct the encoder cable layout.
	Excessive noise to the encoder cable	Check if the encoder cable is bundled with a high-current line or near high-current line.	Change the encoder cable layout so that no surge is applied.
	FG electrical potential varies by influence of such machines on the servomotor side as welder.	Check if the machine is correctly grounded.	Ground the machine separately from PG side FG.
	SERVOPACK pulse counting error due to noise interference	Check if the signal line from the encoder receives influence from noise interference.	Take measures against noise for encoder wiring.
	Excessive vibration and shock to the encoder	Vibration from machine occurred or servomotor mounting such as mounting surface precision, fixing, and alignment is incorrect.	Reduce vibration from machine or mount securely the servomotor.
	Encoder fault	An encoder fault occurred. (no change in pulse count)	Replace the servomotor.
	SERVOPACK fault	Check the multiturn data from SERVOPACK.	Replace the SERVOPACK.
	Host controller multiturn data reading error	Check the error detection at the host controller.	Correct the error detection section of host controller.
		Check if the host controller executes data parity check.	Execute the multiturn data parity check.
		Check noise on the signal line between SERVOPACK and the host controller.	Noise influence at no parity check (as the above.)

Table 10.8 Troubleshooting for Malfunction without Alarm Display (Cont'd)

Symptom	Cause	Inspection	Corrective Actions
		■: Turn OFF the servo system before executing operations.	
Overtravel (OT) (Movement over the zone specified by the host controller)	An overtravel signal is output (P-OT (CN1-42) or N-OT (CN1-43)) is at H.	Check if the voltage of input signal external power supply (+24 V) is correct.	Connect to the external +24 V power supply.
		Check if the overtravel limit switch (SW) operates properly.	Correct the overtravel limit SW.
		Check if the overtravel limit switch (SW) is connected correctly.	Correct the overtravel limit SW wiring.
	The overtravel signal does not operate normally (P-OT or N-OT signal sometimes changes).	Check the fluctuation of the input signal external power supply (+24 V) voltage.	Stabilize the external +24 V power supply voltage.
		Check if the overtravel limit switch (SW) activate correctly.	Adjust the overtravel limit SW so that it operates correctly.
		Check if the overtravel limit switch wiring is correct. (check for damaged cables or loosen screws.)	Correct the overtravel limit SW wiring.
	Incorrect P-OT/N-OT signal selection	Check the P-OT signal selection (Pn50A.3).	Correct the setting of P-OT signal selection (Pn50A.3).
		Check the N-OT signal selection (Pn50B.0).	Correct the setting of N-OT signal selection (Pn50B.0).
	Incorrect servomotor stop method selection	Check if "coast to stop" in servo OFF status is selected.	Check Pn001.0 and Pn001.1.
		Check if "coast to stop" in torque control mode is selected.	Check Pn001.0 and Pn001.1.
	Improper overtravel position setting	The distance to the position of OT (overtravel) is too short considering the coasting distance.	Correct the OT position.
	Noise interference due to improper encoder cable specifications	The encoder cable specifications must be: Twisted-pair or twisted-pair shielded wire with core 0.12 mm^2 (0.0002 in^2) min. and tinned annealed copper twisted wire.	Use encoder cable with the specified specifications.
	Noise interference because the encoder cable distance is too long.	The wiring distance must be 20 m (65.6 ft) max.	The encoder cable distance must be within the specified range.
	Noise influence due to damaged encoder cable	Check if the encoder cable is bent or its sheath is damaged.	Correct the encoder cable layout.
	Excessive noise interference to encoder cable	Check if the encoder cable is bundled with a high-current line or near high-current line.	Change the encoder cable layout so that no surge is applied.
	FG electrical potential varies by influence of such machines on the servomotor side as welders.	Check if the machine is correctly grounded.	Ground the machine separately from PG side FG.
	SERVOPACK pulse count error due to noise	Check if the signal line from the encoder is influenced by noise.	Take a measure against noise for the encoder wiring.
	Excessive vibration and shock to the encoder	Machine vibration occurred or servomotor mounting such as mounting surface precision, fixing, alignment is incorrect.	Reduce the machine vibration or mount the servomotor securely.
	Encoder fault	An encoder fault occurred.	Replace the servomotor.
	SERVOPACK fault	A SERVOPACK fault occurred.	Replace the SERVOPACK.
Position error (without alarm)	Unsecured coupling between machine and servomotor	Check if a position error occurs at the coupling between machine and servomotor.	Secure the coupling between the machine and servomotor.
	Noise interference due to improper input signal cable specifications	The input signal cable specifications must be: Twisted-pair or twisted-pair shielded wire with core 0.12 mm^2 (0.0002 in^2) min. and tinned annealed copper twisted wire.	Use input signal cable with the specified specifications.
	Noise interference because the input signal cable distance is too long.	The wiring distance must be 3 m (9.84 ft) max. and the impedance several hundreds ohm max.	The input signal cable distance must be within the specified range.
	Encoder fault (pulse count does not change)	An encoder fault occurred. (pulse count does not change)	Replace the servomotor.

Table 10.8 Troubleshooting for Malfunction without Alarm Display (Cont'd)

Symptom	Cause	Inspection	Corrective Actions
		■: Turn OFF the servo system before executing operations.	
Servomotor Overheated	Ambient temperature too high	Measure servomotor ambient temperature.	Reduce ambient temperature to 40°C (104 °F) max.
	Servomotor surface dirty	Check visually.	Clean dust and oil from servomotor surface.
	Overloaded	Run under no load.	Reconsider load and operation conditions or replace with larger capacity servomotor.

10.2 Inspection and Maintenance

10.2.1 Servomotor Inspection

The AC servomotors are brushless. Simple, daily inspection is sufficient. The inspection and maintenance frequencies in Table 10.9 are only guidelines. Increase or decrease the frequency to suit the operating conditions and environment.

IMPORTANT

During inspection and maintenance, do not disassemble the servomotor. If disassembly of the servomotor is required, contact your Yaskawa representative.

Table 10.9 Servomotor Inspections

Item	Frequency	Procedure	Comments
Vibration and Noise	Daily	Touch and listen.	Levels higher than normal?
Exterior	According to degree of contamination	Clean with cloth or compressed air.	–
Insulation Resistance Measurement	At least once a year	Disconnect SERVOPACK and test insulation resistance at 500 V. Must exceed 10 MΩ .*	Contact your Yaskawa representative if the insulation resistance is below 10 MΩ .
Replacing Oil Seal	At least once every 5,000 hours	Remove servomotor from machine and replace oil seal.	Applies only to servomotors with oil seals.
Overhaul	At least once every 20,000 hours or 5 years	Contact your Yaskawa representative.	The user should not disassemble and clean the servomotor.

* Measure across the servomotor FG and the phase-U, phase-V, or phase-W power line.

10.2.2 SERVOPACK Inspection

For inspection and maintenance of the SERVOPACK, follow the inspection procedures in Table 10.10 at least once every year. Other routine inspections are not required.

Table 10.10 SERVOPACK Inspections

Item	Frequency	Procedure	Comments
Clean Interior and Circuit Boards	At least once a year	Check for dust, dirt, and oil on the surfaces.	Clean with cloth or compressed air.
Loose Screws		Check for loose terminal block and connector screws.	Tighten any loose screws.
Defective Parts in Unit or on Circuit Boards		Check for discoloration, damage, or discontinuities due to heating.	Contact your Yaskawa representative.

10.2.3 SERVOPACK's Parts Replacement Schedule

The following electric or electronic parts are subject to mechanical wear or deterioration over time. To avoid failure, replace these parts at the frequency indicated.

The parameters of any SERVOPACKs overhauled by Yaskawa are reset to the factory settings before shipping. Be sure to confirm that the parameters are properly set before starting operation.

Table 10.11 Periodical Part Replacement

Part	Standard Replacement Period	Replacement Method	Operating Conditions
Cooling Fan	4 to 5 years	Replace with new part.	• Ambient Temperature: Annual average of 30°C • Load Factor: 80% max. • Operation Rate: 20 hours/day max.
Smoothing Capacitor	7 to 8 years	Test. Replace with new part if necessary.	
Relays	–	Test. Replace if necessary.	
Fuses	10 years	Replace with new part.	
Aluminum Electrolytic Capacitor on Circuit Board	5 years	Test. Replace with new circuit board if necessary.	

11

Appendix

11.1 Servomotor Capacity Selection Examples - - - - - - - - - - - - - 11-2
11.1.1 Selection Example for Speed Control - 11-2
11.1.2 Selection Example for Position Control - 11-4
11.1.3 Calculating the Required Capacity of Regenerative Resistors - - - - 11-7

11.2 Connection to Host Controller - 11-16
11.2.1 Example of Connection to MP920 4-axes Analog Module SVA-01 - 11-16
11.2.2 Example of Connection to CP-9200SH Servo Controller Module SVA (SERVOPACK in Speed Control Mode) - - - - - - - - - - - - - - - - 11-17
11.2.3 Example of Connection to MEMOCON GL120/130 Series Motion Module MC20 - 11-18
11.2.4 Example of Connection to MEMOCON GL60/70 Series Positioning Module B2813 (SERVOPACK in Position Control Mode) - - - - - - - 11-19
11.2.5 Example of Connection to OMRON's Motion Control Unit - - - - - - 11-20
11.2.6 Example of Connection to OMRON's Position Control Unit - - - - - 11-21
11.2.7 Example of Connection to OMRON's Position Control Unit C500-NC221 (SERVOPACK in Speed Control Mode) - - - - - - - - - - 11-22
11.2.8 Example of Connection to OMRON's Position Control Unit C500-NC112 (SERVOPACK in Position Control Mode) - - - - - - - - - 11-23
11.2.9 Example of Connection to MITSUBISHI's A72 Positioning Unit (SERVOPACK in Speed Control Mode) - 11-24
11.2.10 Example of Connection to MITSUBISHI's A75 Positioning Unit (SERVOPACK in Position Control Mode) - - - - - - - - - - - - - - - - - - 11-25

11.3 List of Parameters - 11-26
11.3.1 Utility Functions List - 11-26
11.3.2 List of Parameters - 11-27
11.3.3 Monitor Modes - 11-43

11.4 Parameter Recording Table - 11-44

11.1 Servomotor Capacity Selection Examples

11.1.1 Selection Example for Speed Control

Mechanical Specifications

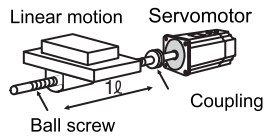

- Load speed: V_ℓ = 15 m/min
- Linear motion section mass: M = 500 kg
- Ball screw length: L_B = 1.4 m
- Ball screw diameter: D_B = 0.04 m
- Ball screw lead: P_B = 0.01 m
- Coupling mass: M_C = 1 kg
- Coupling outer diameter: D_C = 0.06 m
- Feeding times: n = 40 times/min
- Feeding distance: ℓ = 0.275 m
- Feeding time: tm = 1.2 s max.
- Friction coefficient: μ = 0.2
- Mechanical efficiency: η = 0.9 (90%)

(1) Speed Diagram

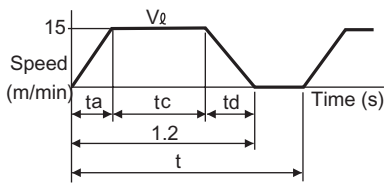

$$t = \frac{60}{n} = \frac{60}{40} = 1.5 \text{ (s)}$$

where ta = td

$$ta = tm - \frac{60 \times \ell}{V_\ell} = 1.2 - \frac{60 \times 0.275}{15} = 0.1 \text{ (s)}$$

$$tc = 1.2 - 0.1 \times 2 = 1.0 \text{ (s)}$$

(2) Rotation Speed

- Load axis rotation speed

$$N_\ell = \frac{V_\ell}{P_B} = \frac{15}{0.01} = 1500 \text{ (min}^{-1}\text{)}$$

- Motor shaft rotation speed with the direct coupling: Gear ratio 1/R = 1/1
  Therefore,

$$N_M = N_\ell \cdot R = 1500 \times 1 = 1500 \text{ (min}^{1}\text{)}$$

(3) Load torque

$$T_L = \frac{9.8\mu \cdot M \cdot P_B}{2\pi R \cdot \eta} = \frac{9.8 \times 0.2 \times 500 \times 0.01}{2\pi \times 1 \times 0.9} = 1.73 \text{ (N·m)}$$

(4) Load Moment of Inertia

- Linear motion section

$$J_{L1} = M\left(\frac{P_B}{2\pi R}\right)^2 = 500 \times \left(\frac{0.01}{2\pi \times 1}\right)^2 = 12.7 \times 10^{-4} \text{ (kg} \cdot \text{m}^2\text{)}$$

- Ball screw

$$J_B = \frac{\pi}{32}\rho \cdot L_B \cdot D_B^4 = \frac{\pi}{32} \times 7.87 \times 10^{-3} \times 1.4 \times (0.04)^4 = 27.7 \times 10^{-4} \text{ (kg} \cdot \text{m}^2\text{)}$$

- Coupling

$$J_C = \frac{1}{8} M_C \cdot D_C^2 = \frac{1}{8} \times 1 \times (0.06)^2 = 4.5 \times 10^{-4} \text{ (kg} \cdot \text{m}^2\text{)}$$

- Load moment of inertia at motor shaft

$$J_L = J_{L1} + J_B + J_C = 44.9 \times 10^{-4}\ (kg \cdot m^2)$$

(5) Load Moving Power

$$P_O = \frac{2\pi N_M \cdot T_L}{60} = \frac{2\pi \times 1500 \times 1.73}{60} = 272\ (W)$$

(6) Load Acceleration Power

$$P_a = \left(\frac{2\pi}{60} N_M\right)^2 \frac{J_L}{ta} = \left(\frac{2\pi}{60} \times 1500\right)^2 \frac{44.9 \times 10^{-4}}{0.1} = 1108\ (W)$$

(7) Servomotor Provisional Selection

(a) Selecting Conditions

- $T_L \leq$ Motor rated torque
- Pa + Po = (1 to 2) × Motor rated output
- $N_M \leq$ Motor rated speed
- $J_L \leq$ SERVOPACK allowable load moment of inertia

The followings satisfy the conditions.

- SGMGH-09A2A servomotor
- SGDH-10ADG SERVOPACK

(b) Specifications of the Provisionally Selected Servomotor and SERVOPACK

- Rated output: 850 (W)
- Rated motor speed: 1500 (min^{-1})
- Rated torque: 5.39 (N·m)
- Instantaneous peak torque: 13.8 (N·m)
- Servomotor moment of inertia: 13.9×10^{-4} ($kg \cdot m^2$)
- SERVOPACK allowable load moment of inertia: 69.58×10^{-4} ($kg \cdot m^2$)

(8) Verification on the Provisionally Selected Servomotor

- Required starting torque

$$T_P = \frac{2\pi N_M (J_M + J_L)}{60ta} + T_L = \frac{2\pi \times 1500 \times (13.9 + 44.9) \times 10^{-4}}{60 \times 0.1} + 1.73$$

≒ 11 (N·m) < Instantaneous peak torque…Satisfactory

- Required braking torque

$$T_S = \frac{2\pi N_M (J_M + J_L)}{60td} - T_L = \frac{2\pi \times 1500 \times (13.9 + 44.9) \times 10^{-4}}{60 \times 0.1} - 1.73$$

≒ 7.5 (N·m) < Instantaneous peak torque…Satisfactory

- Torque efficiency

$$T_{rms} = \sqrt{\frac{T_P^2 \cdot ta + T_L^2 \cdot tc + T_S^2 \cdot td}{t}} = \sqrt{\frac{(11)^2 \times 0.1 + (1.73)^2 \times 1.0 + (7.5)^2 \times 0.1}{1.5}}$$

≒ 3.72 (N·m) < Rated torque…Satisfactory

(9) Result

The provisionally selected servomotor and SERVOPACK are confirmed to be applicable.
The torque diagram is shown below.

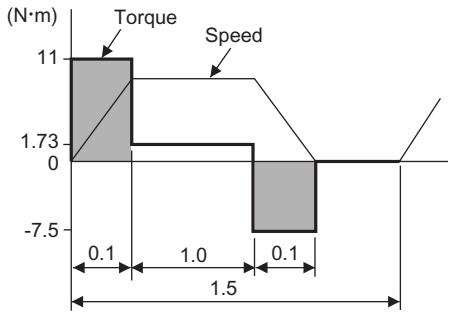

11.1.2 Selection Example for Position Control

Mechanical Specifications

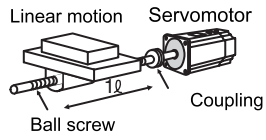

- Load speed: V_ℓ = 15 m/min
- Linear motion section mass: M = 80 kg
- Ball screw length: L_B = 0.8 m
- Ball screw diameter: D_B = 0.016 m
- Ball screw lead: P_B = 0.005 m
- Coupling mass: M_C = 0.3 kg
- Coupling outer diameter: D_C =0 .03 m
- Positioning times: n = 40 times/min
- Positioning distance: ℓ = 0.25 m
- Positioning time: tm = Less than 1.2 s
- Electrical stop accuracy: $\delta = \pm 0.01$ mm
- Friction coefficient: $\mu = 0.2$
- Mechanical efficiency: $\eta = 0.9$ (90%)

(1) Speed Diagram

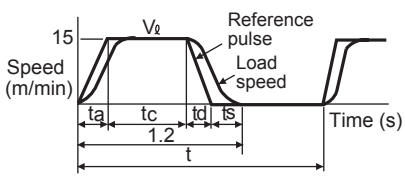

$$t = \frac{60}{n} = \frac{60}{40} = 1.5(s)$$

Where ta = td, ts = 0.1 (s)

$$ta = tm - ts - \frac{60\ell}{V_\ell} = 1.2 - 0.1 - \frac{60 \times 0.25}{15} = 0.1\ (s)$$

$$tc = 1.2 - 0.1 - 0.1 \times 2 = 0.9(s)$$

(2) Rotation Speed

- Load axis rotation speed

$$N_\ell = \frac{V_\ell}{P_B} = \frac{15}{0.005} = 3000\ (min^{-1})$$

- Motor shaft rotation speed with direct coupling: Gear ratio 1/R = 1/1
  Therefore,

$$N_M = N_\ell \cdot R = 3000 \times 1 = 3000\ (min^{-1})$$

(3) Load Torque

$$T_L = \frac{9.8\mu \cdot M \cdot P_B}{2\pi R \cdot \eta} = \frac{9.8 \times 0.2 \times 80 \times 0.005}{2\pi \times 1 \times 0.9} = 0.139\ (N{\cdot}m)$$

(4) Load Moment of Inertia

- Liner motion section

$$J_{L1} = M\left(\frac{P_B}{2\pi R}\right)^2 = 80 \times \left(\frac{0.005}{2\pi \times 1}\right)^2 = 0.507 \times 10^{-4}\ (\mathrm{kg \cdot m^2})$$

- Ball screw

$$J_B = \frac{\pi}{32}\rho \cdot L_B \cdot D_B{}^4 = \frac{\pi}{32} \times 7.87 \times 10^3 \times 0.8 \times (0.016)^4 = 0.405 \times 10^{-4}\ (\mathrm{kg \cdot m^2})$$

- Coupling

$$J_C = \frac{1}{8} M_C \cdot D_C{}^4 = \frac{1}{8} \times 0.3 \times (0.03)^2 = 0.338 \times 10^{-4}\ (\mathrm{kg \cdot m^2})$$

- Load moment of inertia at the motor shaft

$$J_L = J_{L1} \cdot J_B \cdot J_C = 1.25 \times 10^{-4}\ (\mathrm{kg \cdot m^2})$$

(5) Load Moving Power

$$P_O = \frac{2\pi N_M \cdot T_L}{60} = \frac{2\pi \times 3000 \times 0.139}{60} = 43.7\ (\mathrm{W})$$

(6) Load Acceleration Power

$$P_a = \left(\frac{2\pi}{60} N_M\right)^2 \frac{J_L}{ta} = \left(\frac{2\pi}{60} \times 3000\right)^2 \frac{1.25 \times 10^{-4}}{0.1} = 123.4\ (\mathrm{W})$$

(7) Provisionally Servomotor Selection

(a) Selecting Conditions

- $T_L \leq$ Motor rated torque
- Pa + Po = (1 to 2) × Motor rated output
- $N_M \leq$ Motor rated speed
- $J_L \leq$ SERVOPACK allowable load moment of inertia

The followings satisfy the conditions.

- SGMPH-02A312 servomotor
- SGDH-02AP SERVOPACK (for position control)

(b) Specifications of Servomotor and SERVOPACK

- Rated output: 200 (W)
- Rated motor speed: 3000 ($\mathrm{min^{-1}}$)
- Rated torque: 0.637 (N·m)
- Instantaneous peak torque: 1.91 (N·m)
- Servomotor rotor moment of inertia: 0.209×10^{-4} ($\mathrm{kg \cdot m^2}$)
- SERVOPACK allowable load moment of inertia: 3.69×10^{-4} ($\mathrm{kg \cdot m^2}$)
- Number of encoder pulses: 2048 (P/R)

(8) Verification on Provisionally Selected Servomotor

- Required starting torque

$$T_P = \frac{2\pi N_M (J_M + J_L)}{60ta} + T_L = \frac{2\pi \times 3000 \times (0.209 + 1.25) \times 10^{-4}}{60 \times 0.1} + 0.139$$

≒ 0.597 (N·m) < Instantaneous peak torque…Satisfactory

- Required braking torque

$$T_S = \frac{2\pi N_M (J_M + J_L)}{60ta} - T_L = \frac{2\pi \times 3000 \times (0.209 + 1.25) \times 10^{-4}}{60 \times 0.1} - 0.139$$

≒ 0.319 (N·m) < Instantaneous peak torque…Satisfactory

- Effective torque

$$T_{rms} = \sqrt{\frac{T_P^2 \cdot ta + T_L^2 \cdot tc + T_S^2 \cdot td}{t}} = \sqrt{\frac{(0.597)^2 \times 0.1 + (0.139)^2 \times 0.9 + (0.319)^2 \times 0.1}{1.5}}$$

≒ 0.205 (N·m) < Rated torque…Satisfactory

The above confirms that the provisionally selected servomotor and SERVOPACK capacities are sufficient. In the next step, their performance in position control are checked.

(9) PG Feedback Pulse Dividing Ratio: Setting of Electronic Gear Ratio $(\frac{B}{A})$

As the electrical stop accuracy $\delta = \pm 0.01$mm, take the position detection unit $\Delta\ell = 0.01$mm/pulse.

$$\frac{P_B}{\Delta\ell} \times \left(\frac{B}{A}\right) = \frac{5}{0.01} \times \left(\frac{B}{A}\right) = 2048 \times 4$$

$$k = \frac{B}{A} = \frac{2048 \times 4}{500}$$

(10) Reference Pulse Frequency

$$vs = \frac{1000V_\ell}{60 \times \Delta\ell} = \frac{1000 \times 15}{60 \times 0.01} = 25{,}000 \text{ (pps)}$$

(11) Error Counter Pulses

Position loop gain Kp = 30 (1/S)

$$\varepsilon = \frac{vs}{Kp} = \frac{25{,}000}{30} = 833 \text{ (pulse)}$$

(12) Electrical Stop Accuracy

$$\pm\Delta\varepsilon = \pm \frac{\varepsilon}{(\text{SERVOPACK control range}) \times \frac{N_M}{N_R}} = \pm \frac{833}{5000 \times \frac{3000}{3000}} \fallingdotseq \pm 0.17 < \pm 1 \text{ (pulse)} = \pm 0.01 \text{ (pulse)}$$

The above results confirm that the selected SERVOPACK and servomotor are applicable for the position control.

11.1.3 Calculating the Required Capacity of Regenerative Resistors

(1) Simple Calculation

When driving a servomotor with the horizontal axis, check the external regenerative resistor requirements using the calculation method shown below.

(a) SERVOPACKs with Capacities of 400 W or Less

SERVOPACKs with capacities of 400 W or less do not have built-in regenerative resistors. The energy that can be charged with capacitors is shown in the following table. If the rotational energy in the servomotor exceeds these values, then connect an external regenerative resistor.

Voltage	Applicable SERVO-PACKs	Regenerative Energy that Can be Processed (joules)	Remarks
100 V	SGDH-A3BE	7.8	Value when main circuit input voltage is 100 VAC
	SGDH-A5BE to -02BE	15.7	
200 V	SGDH-A3AE, -A5AE	18.5	Value when main circuit input voltage is 200 VAC
	SGDH-01AE to -04AE	37.1	

Calculate the rotational energy E_s in the servomotor from the following equation:

$E_S = J \times (N_M)^2/182$ (joules)

- $J = J_M + J_L$
- J_M: Servomotor rotor moment of inertia ($kg \cdot m^2$)
- J_L: Load converted to shaft moment of inertia ($kg \cdot m^2$)
- N_M: Rotation speed used by servomotor (min^{-1})

(b) SERVOPACKs with Capacities of 500 W to 5.0 kW

Servomotors with capacities of 500 W to 5.0 kW have built-in regenerative resistors. The allowable frequencies for just the servomotor in acceleration and deceleration operation, during the rotation speed cycle from 0 (min^{-1}) to the maximum rotation speed to 0, are summarized in the following table.

Convert the data into the values obtained with actual rotation speed and load moment of inertia to determine whether an external regenerative resistor is needed.

Voltage	Series / Capacity Symbol	Allowable Frequencies in Regenerative Mode (times/min)				
		22	32	40	44	50
200 V	SGMGH-□□A□A	–	–	–	11	–
	SGMGH-□□A□B	–	–	20	–	–
	SGMSH	–	–	29	–	22
	SGMDH	7	11	8	–	–
400 V	SGMGH	–	–	–	11	–
	SGMSH	–	–	29	–	22
	SGMUH	–	–	19	–	–

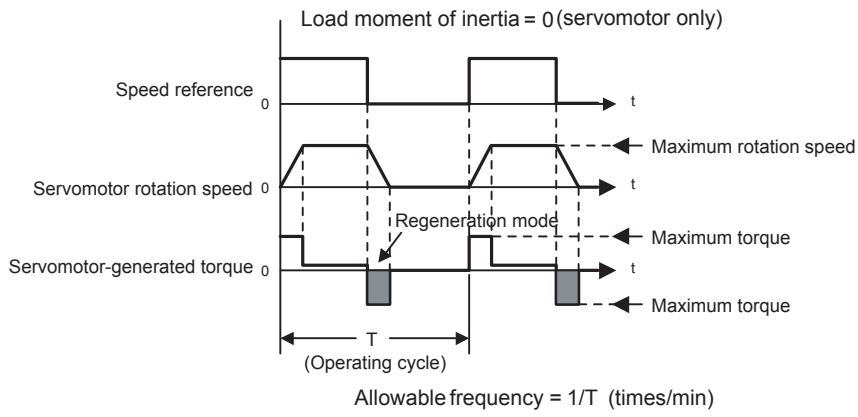

Fig. 11.1 Operating Conditions for Allowable Regenerative Frequency Calculation

Use the following equation to calculate the allowable frequency for regeneration mode operation.

$$\text{Allowable frequency} = \frac{\text{Allowable frequency for Servomotor only}}{(1 + n)} \times \left(\frac{\text{Max. rotation speed}}{\text{Rotation speed}}\right)^2 \text{(times/min)}$$

- $n = J_L/J_M$
- J_M: Servomotor rotor moment of inertia ($kg \cdot m^2$)
- J_L: Load converted to shaft moment of inertia ($kg \cdot m^2$)

(c) SERVOPACKs with Capacities of 6.0 kW or More

SERVOPACKs with capacities of 6.0 kW or more do not have built-in regenerative resistors. The following table shows the allowable regenerative frequencies when the JUSP-RA04 or JUSP-RA05 regenerative resistor is used together with an applicable SERVOPACK.

The servomotor driven conditions and the conversion equation of the allowable regenerative frequencies to the rotation speed and load moment of inertia are the same as the *(b) SERVOPACKs with Capacities of 500 W to 5.0 kW*.

Voltage	Series	Allowable Frequencies in Regenerative Mode (times/min)			
	Capacity Symbol	55	75	1A	1E
200 V	SGMGH-□□A□A	26	36	36	32
	SGMGH-□□A□B	44	–	–	–
400 V	SGMGH-□□D	26	18	36	32

(2) Calculating the Regenerative Energy

This section shows the procedure for calculating the regenerative resistor capacity when acceleration and deceleration operation is as shown in the following diagram.

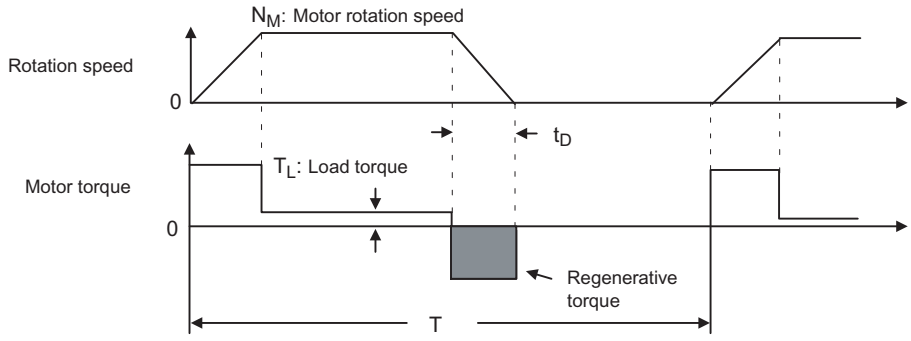

(a) Calculation Procedure

The procedure for calculating the regenerative capacity is as follows:

Step	Item	Symbol	Equation
1	Calculate the rotational energy of the servomotor.	E_S	$E_S = JN_M^2/182$
2	Calculate the energy consumed by load loss during the deceleration period.	E_L	$E_L = (\pi/60)\ N_M T_L t_D$
3	Calculate the energy lost from servomotor winding resistance.	E_M	(Value calculated from "(b) Servomotor Winding Resistance Loss" diagrams) $\times t_D$
4	Calculate the SERVOPACK energy that can be absorbed.	E_C	Calculate from "(3) SERVOPACK's Absorbable Energy" diagrams.
5	Calculate the energy consumed by the regenerative resistor.	E_K	$E_K = E_S - (E_L+E_M+E_C)$
6	Calculate the required regenerative resistor capacity (W).	W_K	$W_K = E_K/ (0.2 \times T)$

Note: 1. The "0.2" in the equation for calculating W_K is the value for when the regenerative resistor's utilized load ratio is 20%.

2. The units for the various symbols are as follows:
   E_S to E_K: Energy joules (J)
   T_L: Load torque (N·m)
   W_K: Regenerative resistor required capacity (W)
   t_D: Deceleration stopping time (s)
   J: $(= J_M + J_L)(kg \cdot m^2)$
   T: Servomotor repeat operation period (s)
   N_M: Servomotor rotation speed (min^{-1})

If the above calculation determines that the amount of regenerative power (Wk) processed by the built-in resistor is not exceeded, then an external regenerative resistor is not required.

If the amount of regenerative power that can be processed by the built-in resistor is exceeded, then install an external regenerative resistor for the capacity obtained from the above calculation.

If the energy consumed by load loss (in step 2 above) is unknown, then perform the calculation using $E_L = 0$.

When the operation period in regeneration mode is continuous, add the following items to the above calculation procedure in order to find the required capacity (W) for the regenerative resistor.

- Energy for continuous regeneration mode operation period: E_G (joules)
- Energy consumed by regenerative resistor: $E_K = E_S - (E_L + E_M + E_C) + E_G$
- Required capacity of regenerative resistor: $W_K = E_K/ (0.2 \times T)$

Here, $E_G = (2\pi/60)\ N_{MG} T_G t_G$

- t_G: Same operation period (s) as above
- T_G: Servomotor's generated torque (N·m) in continuous regeneration mode operation period
- N_{MG}: Servomotor rotation speed (min^{-1}) for same operation period as above

(b) Servomotor Winding Resistance Loss

The following diagrams show the relationship, for each servomotor, between the servomotor's generated torque and the winding resistance loss.

- 100-V Servomotors

SGMAH Servomotors

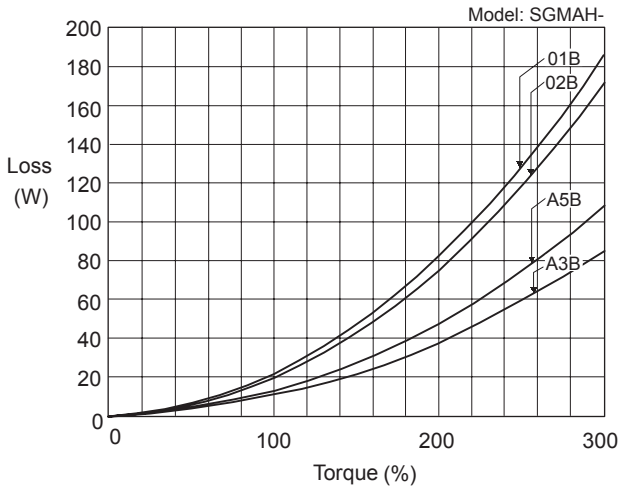

SGMPH Servomotors

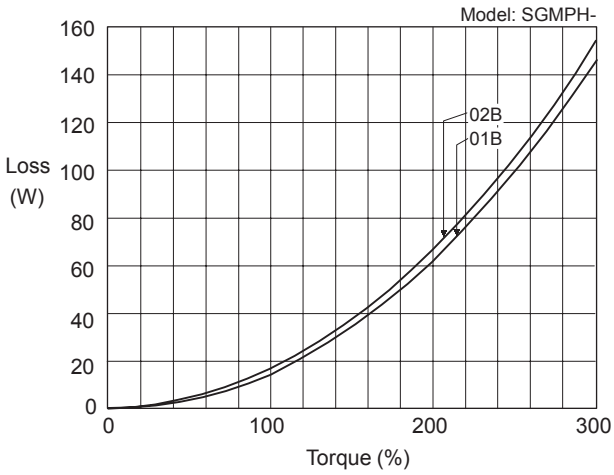

- 200-V Servomotors

SGMAH Servomotors

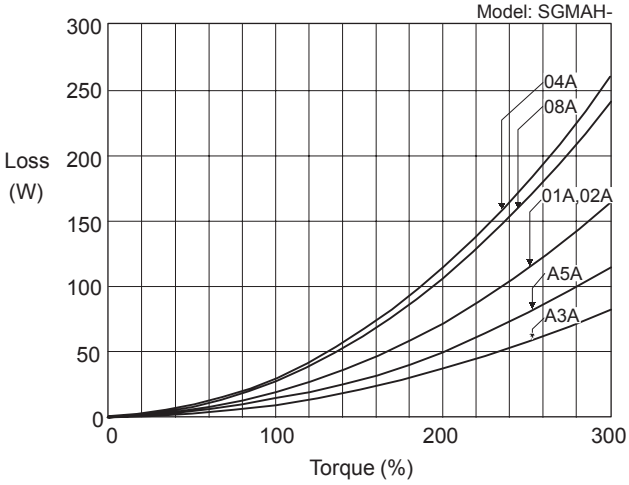

SGMPH Servomotors

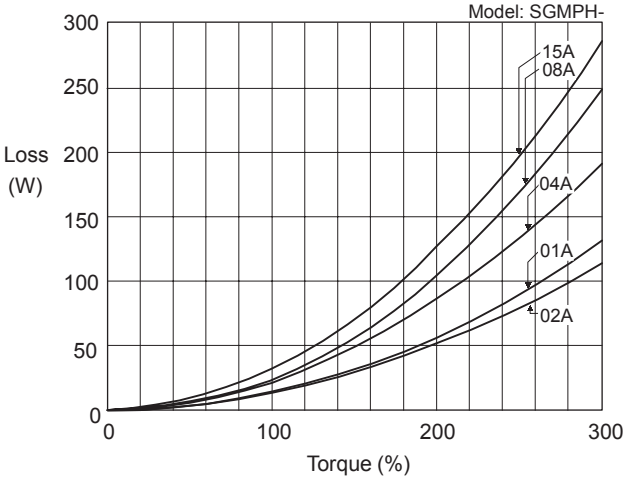

SGMGH Servomotors (1500 min^{-1})

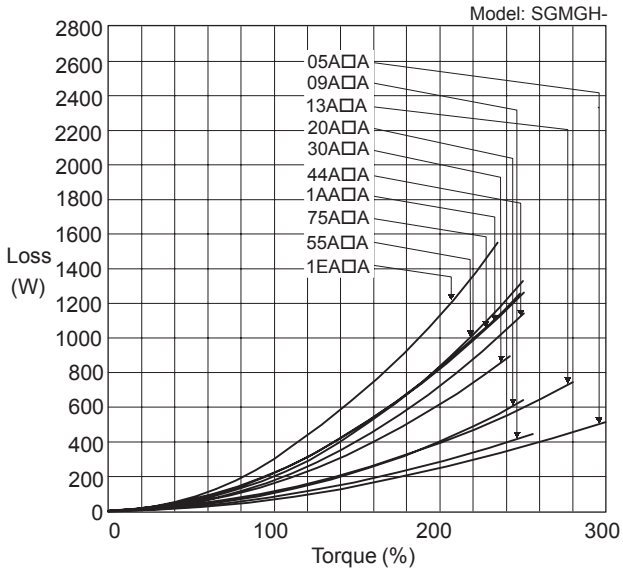

SGMGH Servomotors (1000 min^{-1})

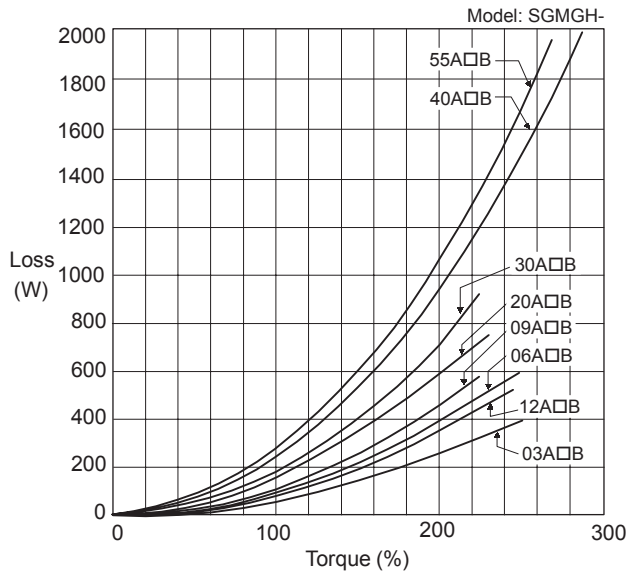

SGMSH Servomotors

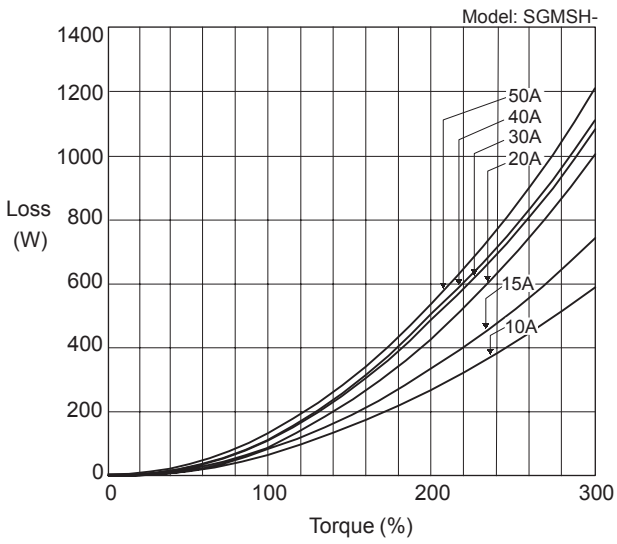

SGMDH Servomotors

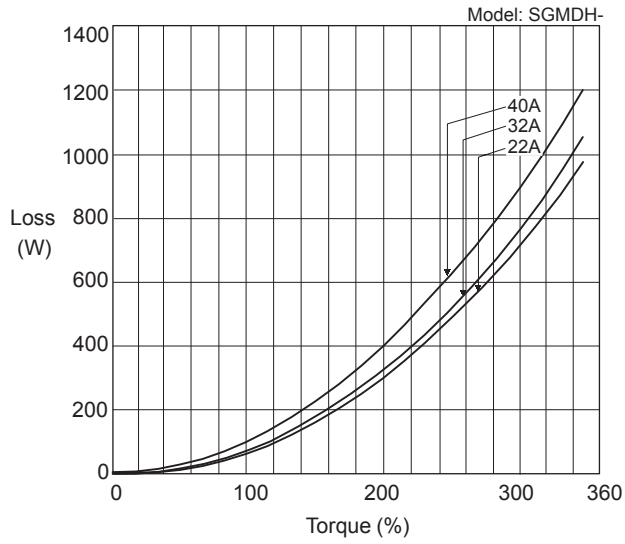

- 400-V Servomotors

SGMGH Servomotors (1500 min^{-1})

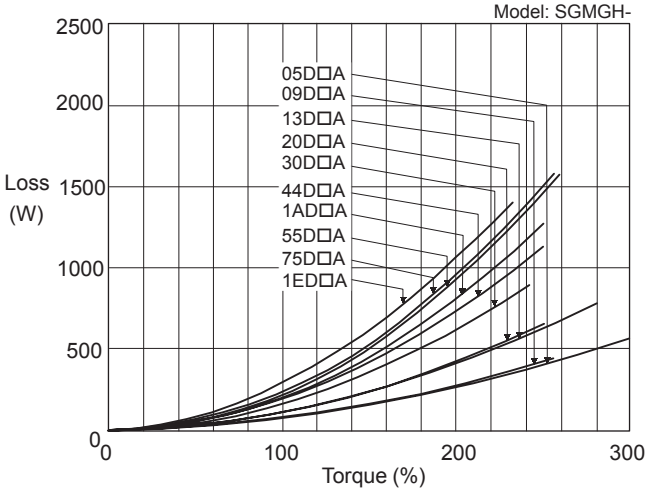

SGMSH Servomotors

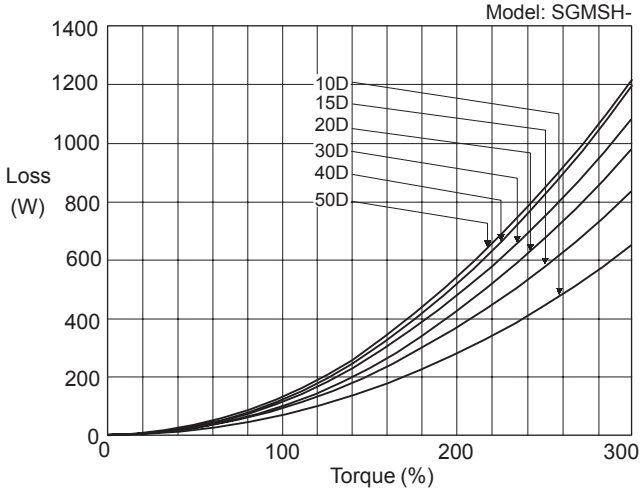

SGMUH Servomotors

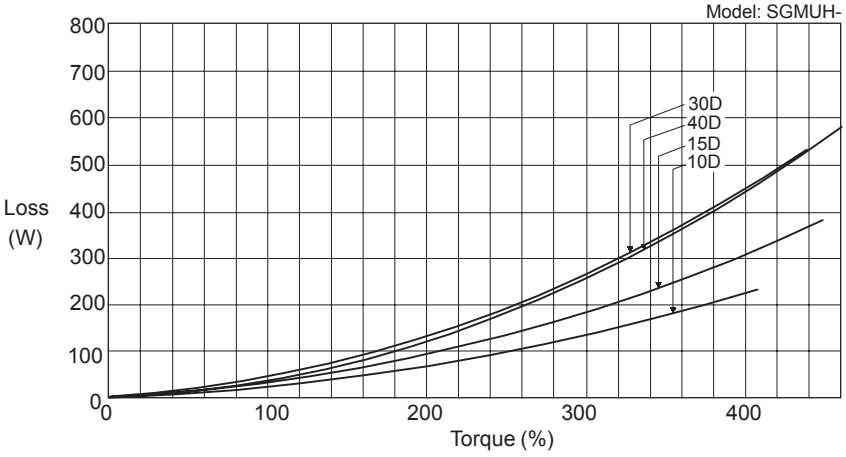

(3) SERVOPACK's Absorbable Energy

The following diagrams show the relationship between the SERVOPACK's input power supply voltage and its absorbable energy.

- 100-V SERVOPACKs

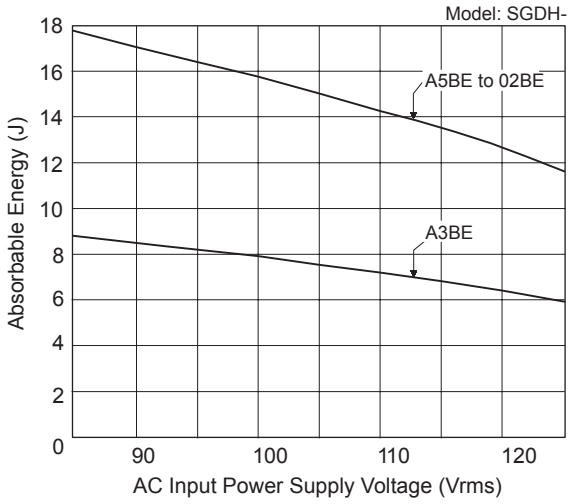

- 200-V SERVOPACKs

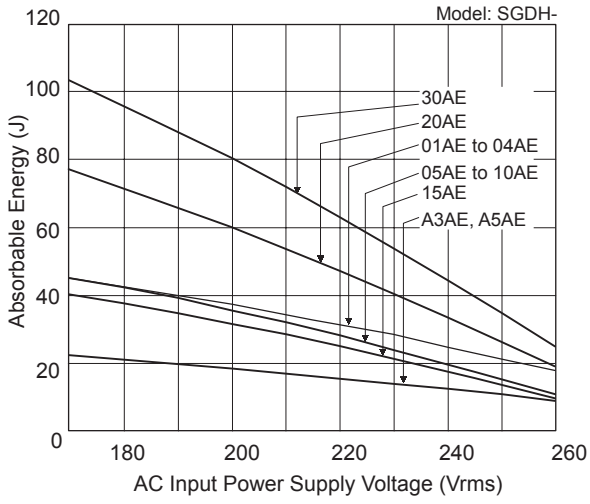

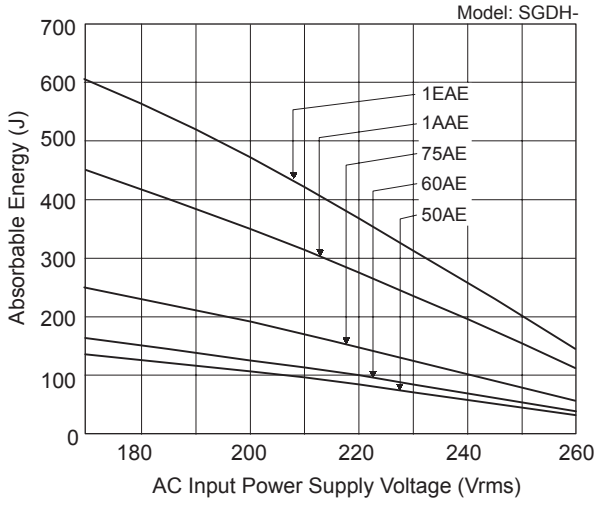

- 400-V SERVOPACKs (05DE to 30DE)

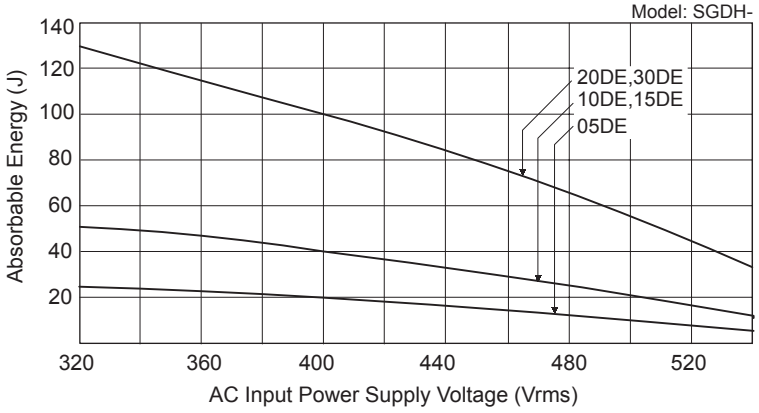

- 400-V SERVOPACKs (50DE to 1EDE)

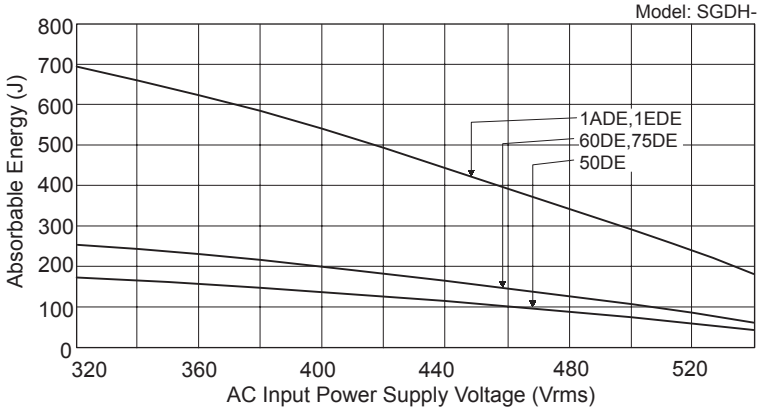

11.2 Connection to Host Controller

11.2.1 Example of Connection to MP920 4-axes Analog Module SVA-01

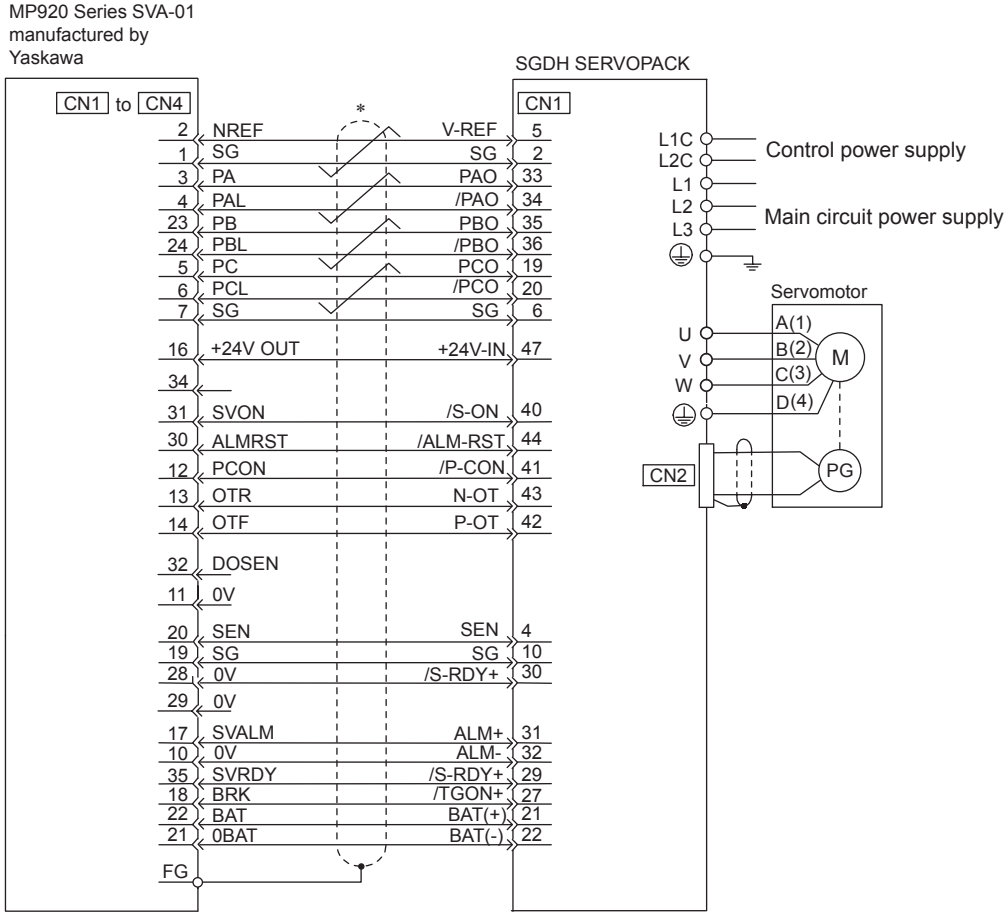

* represents twisted-pair wires.

11.2.2 Example of Connection to CP-9200SH Servo Controller Module SVA (SERVOPACK in Speed Control Mode)

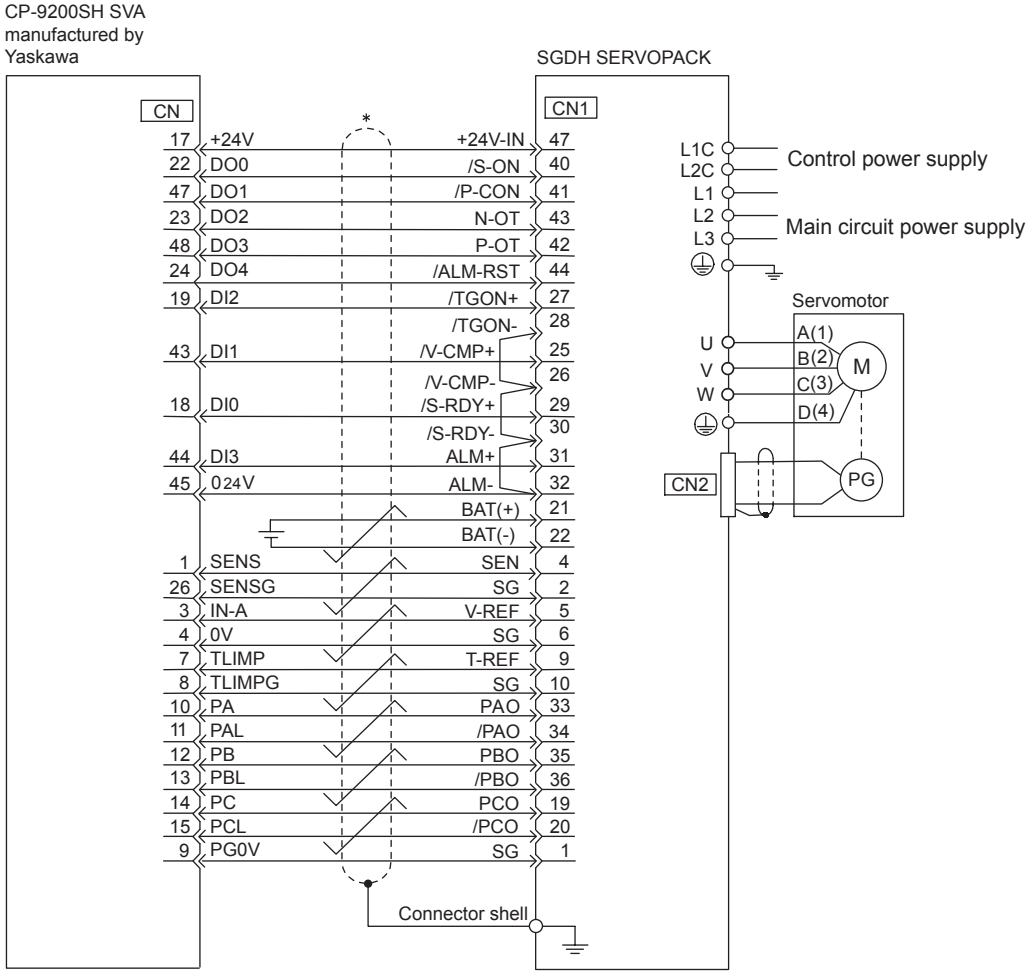

* represents twisted-pair wires.

11.2.3 Example of Connection to MEMOCON GL120/130 Series Motion Module MC20

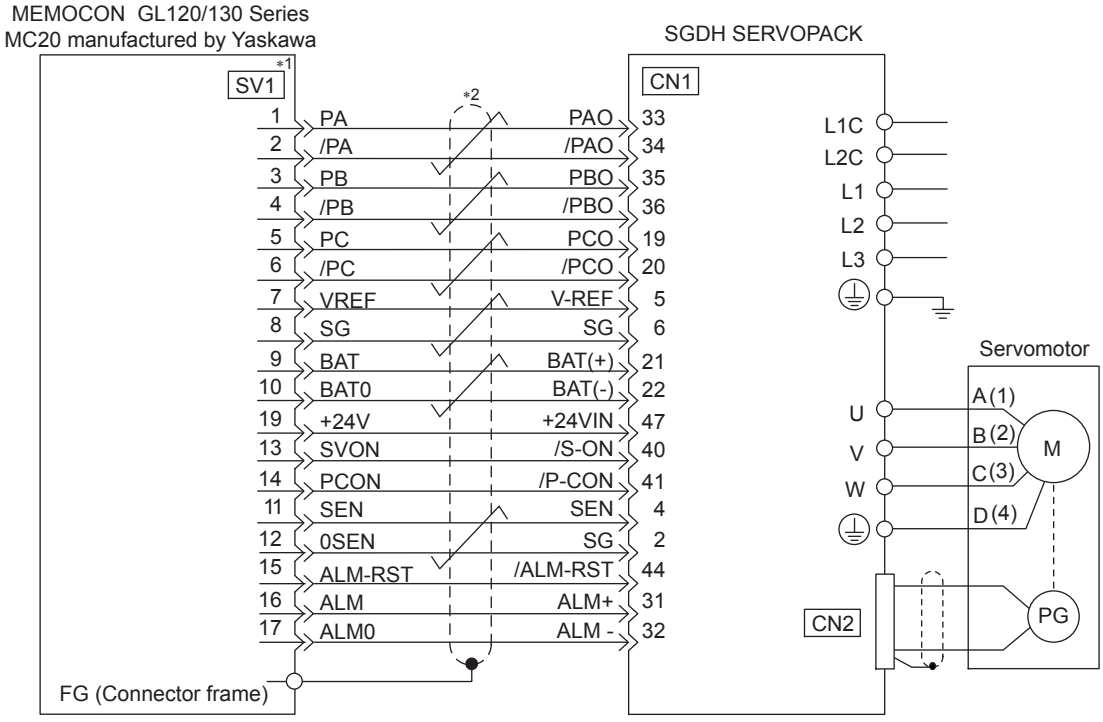

* 1. Pin numbers are the same for SV2 to SV4.

* 2. represents twisted-pair wires.

11.2.4 Example of Connection to MEMOCON GL60/70 Series Positioning Module B2813 (SERVOPACK in Position Control Mode)

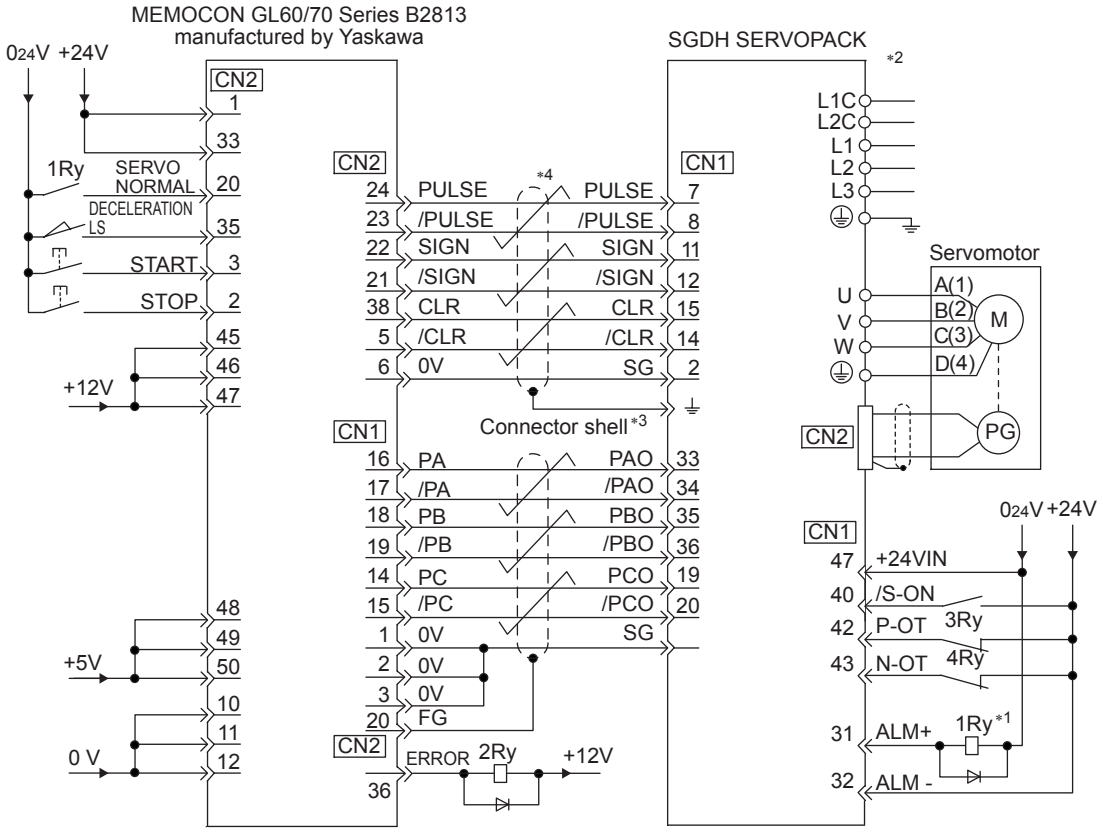

* 1. The ALM signal is output for approximately two seconds when the power is turned ON. Take this into consideration when designing the power ON sequence. The ALM signal actuates the alarm detection relay 1Ry to stop main circuit power supply to the SERVOPACK.
* 2. Set parameter Pn200.0 to 1.
* 3. Connect the shield wire to the connector shell.
* 4. represents twisted-pair wires.

11.2.5 Example of Connection to OMRON's Motion Control Unit

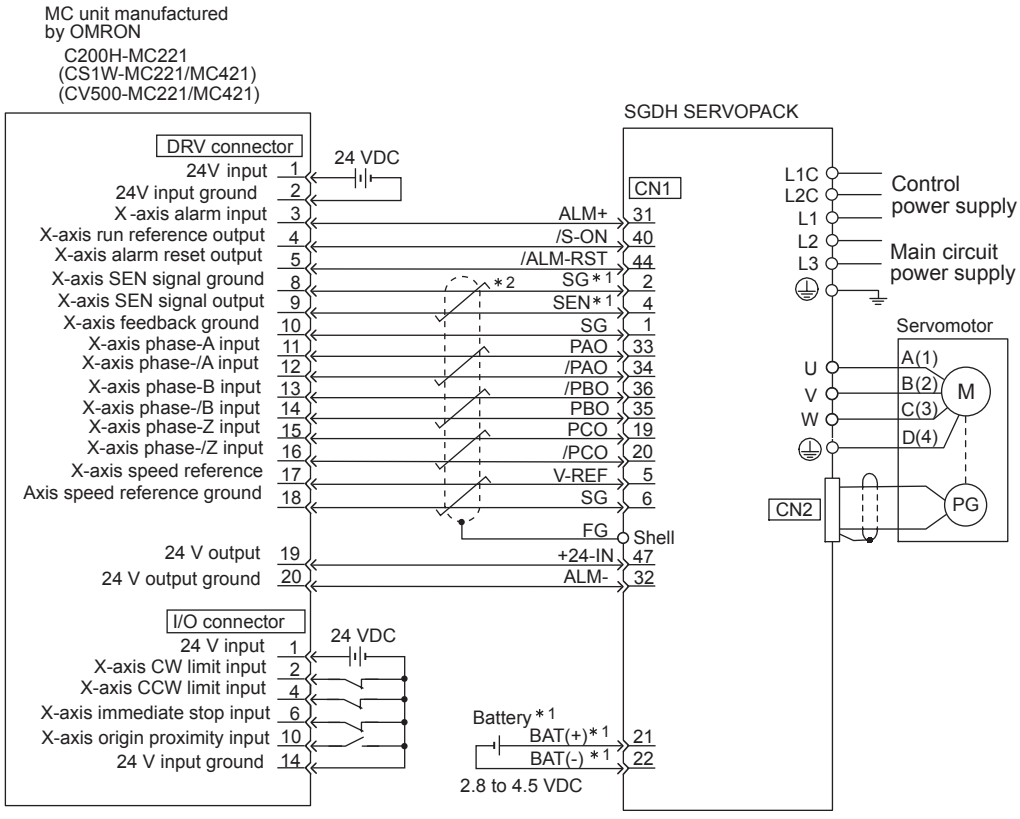

* 1. Connect when an absolute encoder is used.
When a battery is installed in the SERVOPACK, no battery is required for CN1 (between 21 and 22).
- Battery for CN1: ER6VC3 (3.6 V, 2000 mA)
- Battery installed in the SERVOPACK: For 5 kW or less: JUSP-BA01 (3.6 V, 1000 mA)
For 6 kW or more: JUSP-BA01-1 (3.6 V, 1000 mA)

* 2. represents twisted-pair wires.

Note: 1. Only signals applicable to OMRON's MC unit and Yaskawa's SGDH SERVOPACK are shown in the diagram.
2. The main circuit power supply is a three-phase 200 VAC SERVOPACK input in the example. The power supply and wiring must be in accordance with the power supply specifications of the SERVOPACK to be used.
3. Note that incorrect signal connection will cause damage to the MC unit and SERVOPACK.
4. Open the signal lines not to be used.
5. The above connection diagram shows only X-axis connection. When using another axes, make connection to the SERVOPACK in the same way.
6. The normally closed (N.C.) input terminals not to be used at the motion control unit I/O connector section must be short-circuited at the connector.
7. Make the setting so that the servo can be turned ON/OFF by the /S-ON signal.

11.2.6 Example of Connection to OMRON's Position Control Unit

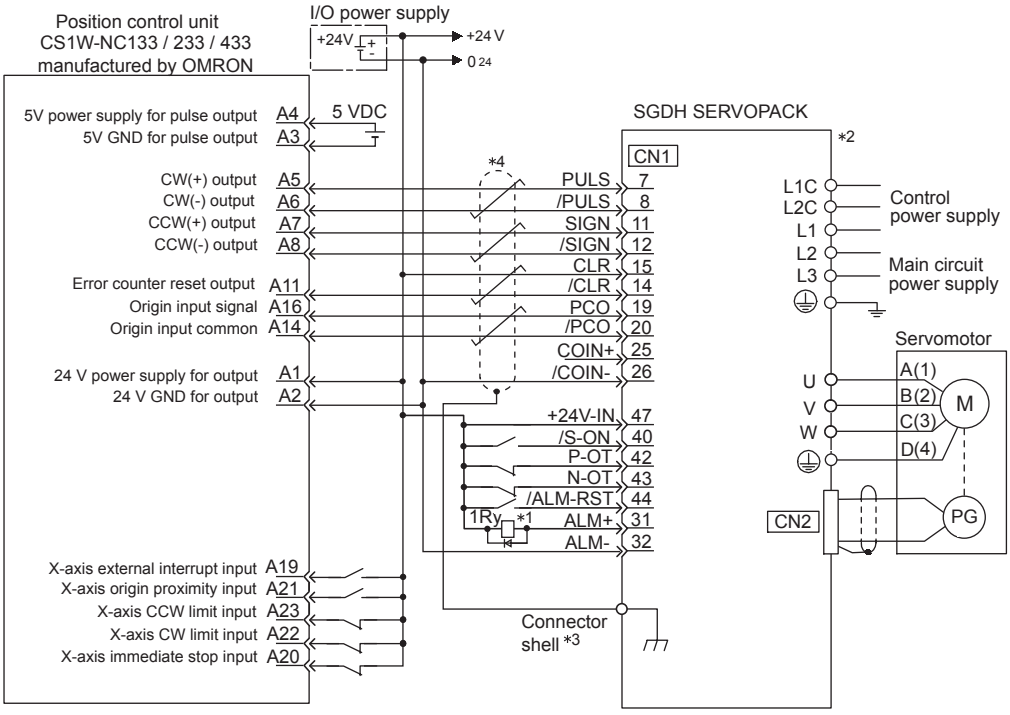

* 1. The ALM signal is output for about two seconds after the power is turned ON. Take this into consideration when designing the power ON sequence. The ALM signal actuates the alarm detection relay 1Ry to stop the main circuit power supply to the SERVOPACK.
* 2. Set parameter Pn200.0 to 1.
* 3. Connect the shield wire to the connector shell.
* 4. represents twisted-pair wires.

Note: Only signals applicable to OMRON's MC unit (positioning unit) and Yaskawa's SGDS SERVOPACK are shown in the diagram.

11.2.7 Example of Connection to OMRON's Position Control Unit C500-NC221 (SERVOPACK in Speed Control Mode)

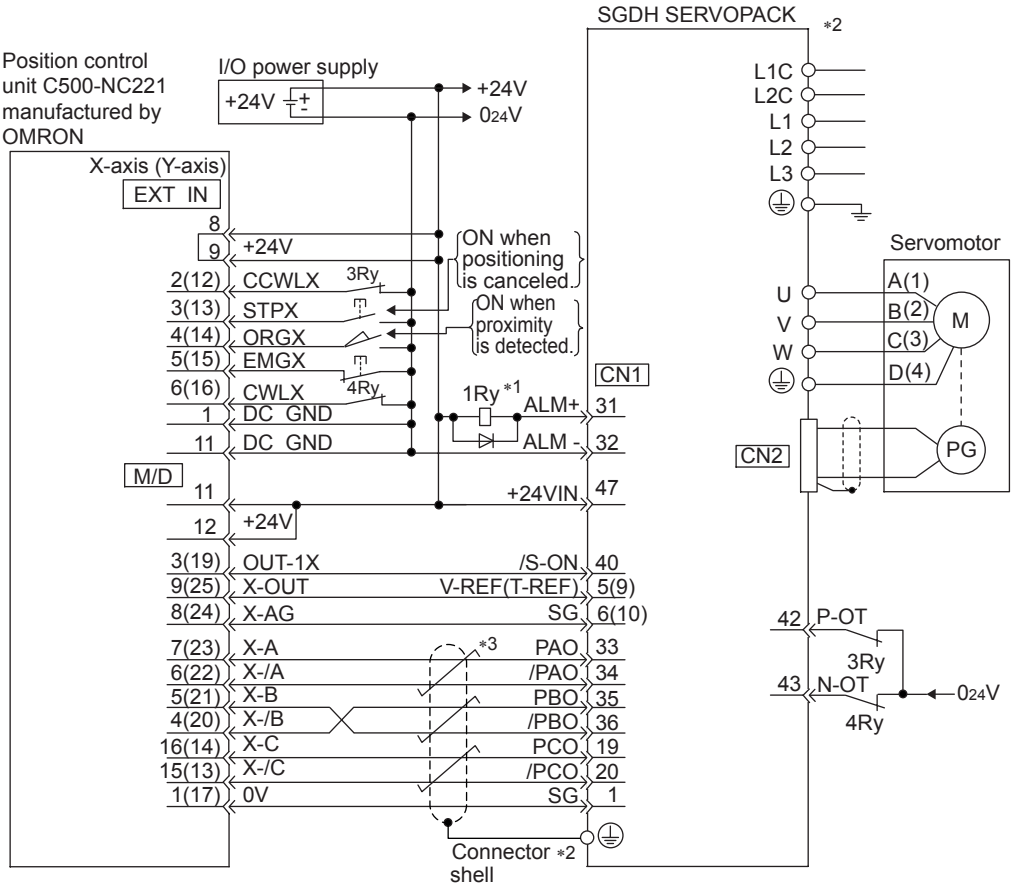

* 1. The ALM signal is output for approximately two seconds when the power is turned ON. Take this into consideration when designing the power ON sequence. The ALM signal actuates the alarm detection relay 1Ry to stop main circuit power supply to the SERVOPACK.
* 2. Connect the I/O cable's shield wire to the connector shell.
* 3. represents twisted-pair wires.

Note: Only signals applicable to OMRON's C500-NC221 position control unit and Yaskawa's SGDH SERVOPACK are shown in the diagram.

11.2.8 Example of Connection to OMRON's Position Control Unit C500-NC112 (SERVOPACK in Position Control Mode)

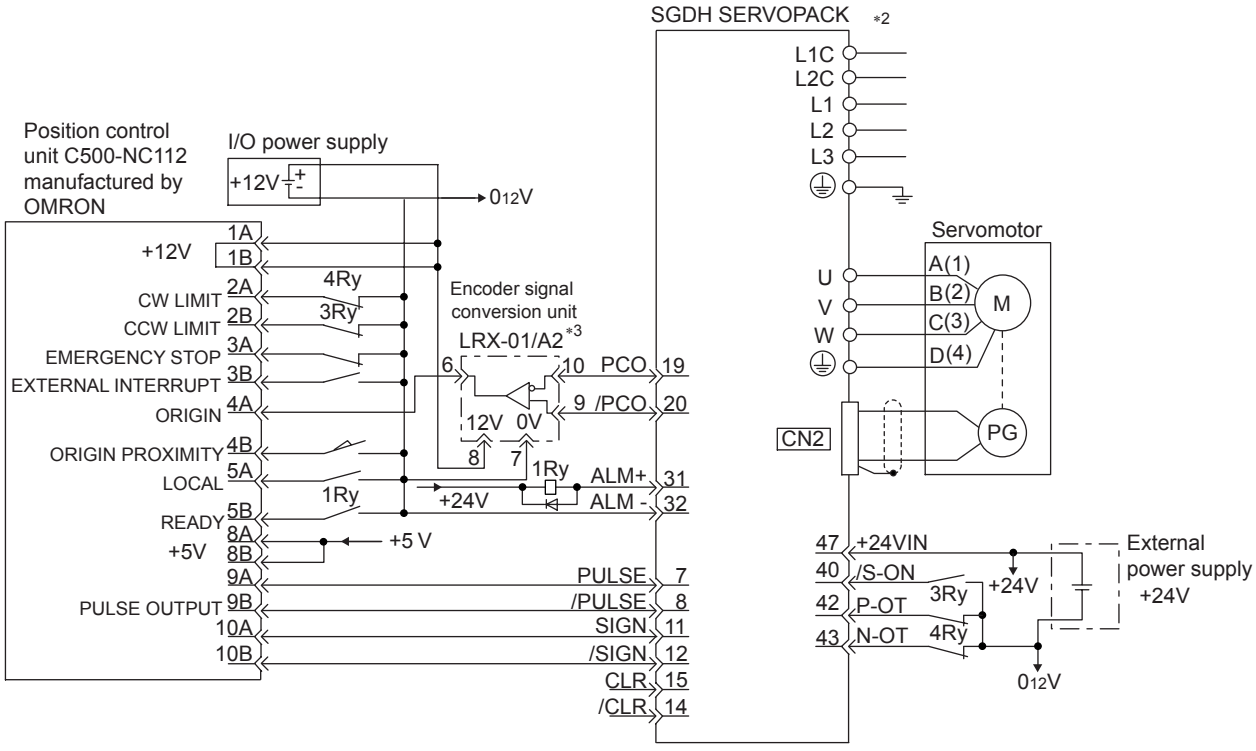

* 1. The ALM signal is output for approximately two seconds when the power is turned ON. Take this into consideration when designing the power ON sequence. The ALM signal actuates the alarm detection relay 1Ry to stop main circuit power supply to the SERVOPACK.
* 2. Set parameter Pn200.0 to 1.
* 3. Manufactured by Yaskawa Controls Co., Ltd.

Note: Only signals applicable to OMRON's C500-NC112 position control unit and Yaskawa's SGDH SERVOPACK are shown in the diagram.

11.2.9 Example of Connection to MITSUBISHI's AD72 Positioning Unit (SERVOPACK in Speed Control Mode)

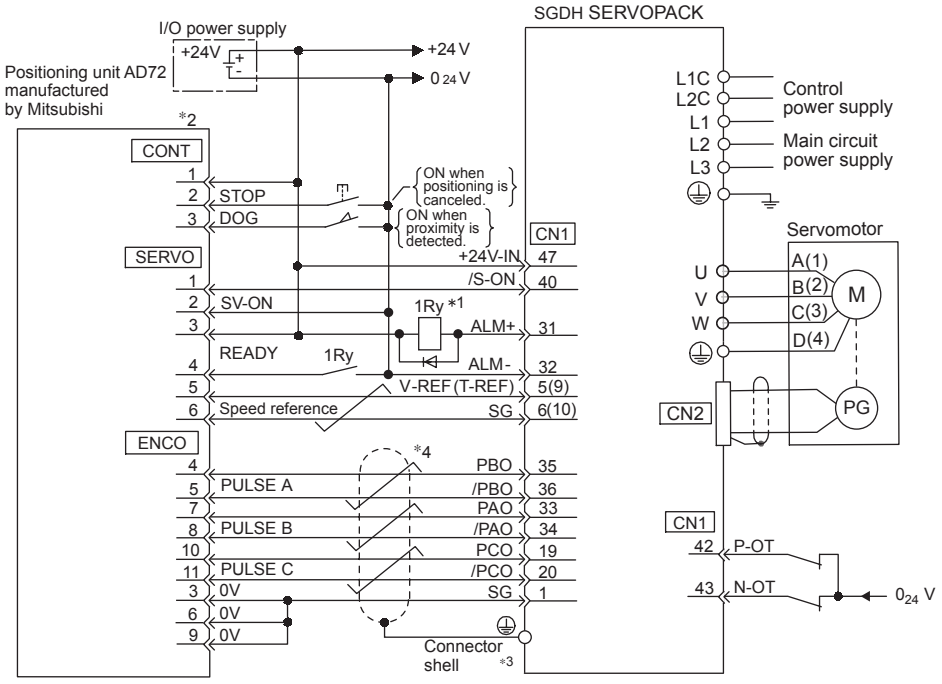

* 1. The ALM signal is output for about two seconds after the power is turned ON. Take this into consideration when designing the power ON sequence. The ALM signal actuates the alarm detection relay 1Ry to stop the main circuit power supply to the SERVOPACK.
* 2. Pin numbers are the same both for X-axis and Y-axis.
* 3. Connect the connector wire to the connector shell.
* 4. represents twisted-pair wires.

Note: Only signals applicable to Mitsubishi's AD72 Positioning Unit and Yaskawa's SGDH SERVOPACK are shown in the diagram.

11.2.10 Example of Connection to MITSUBISHI's AD75 Positioning Unit (SERVOPACK in Position Control Mode)

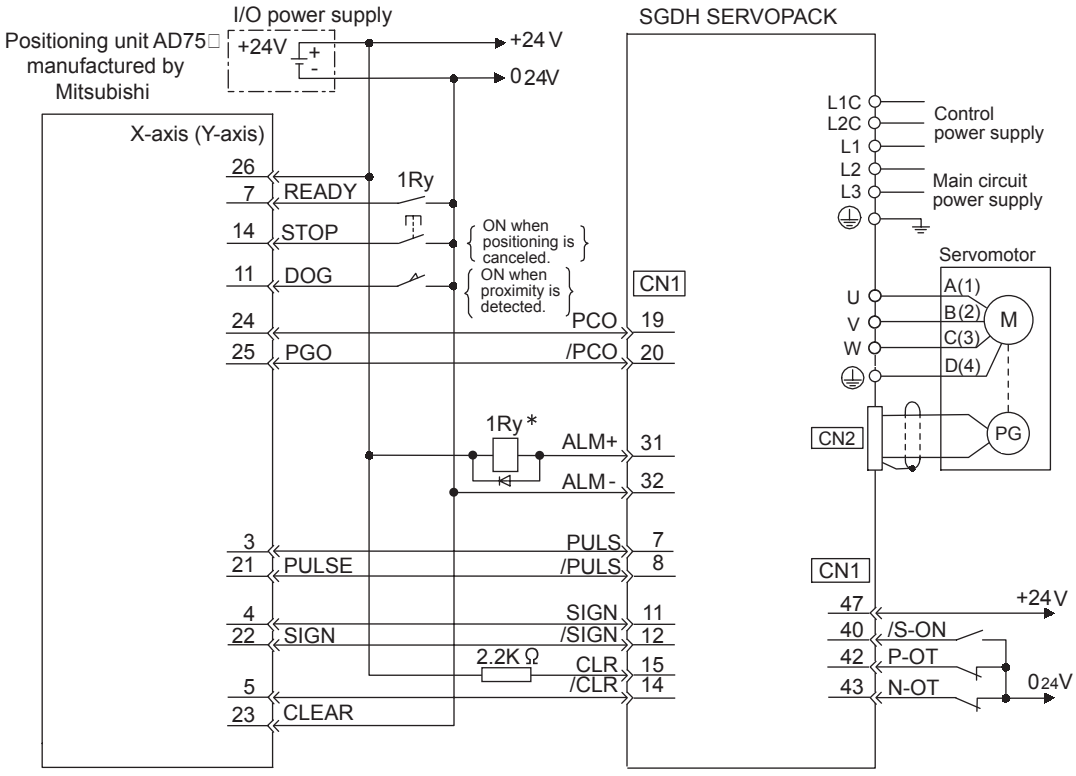

* The ALM signal is output for about two seconds when the power is turned ON. Take this into consideration when designing the power ON sequence. The ALM signal actuates the alarm detection relay 1Ry to stop the main circuit power supply to the SERVOPACK.

Note: Only signals applicable to Mitsubishi's AD75 Positioning Unit and Yaskawa's SGDH SERVOPACK are shown in the diagram.

11.3 List of Parameters

11.3.1 Utility Functions List

The following list shows the available utility functions.

Parameter No.	Function	Remarks	Reference Section
Fn000	Alarm traceback data display		7.2.2
Fn001	Rigidity setting during online autotuning	○	9.2.4
Fn002	JOG mode operation	○	8.1.1
Fn003	Zero-point search mode	○	7.2.3
Fn004	Fixed parameter (Do not change.)	○	–
Fn005	Parameter setting initialization	○	7.2.4
Fn006	Alarm traceback data clear	○	7.2.5
Fn007	Writing to EEPROM inertia ratio data obtained from online autotuning	○	9.2.7
Fn008	Absolute encoder multiturn reset and encoder alarm reset	○	8.4.5
Fn009	Automatic tuning of analog (speed, torque) reference offset	○	8.5.3 8.7.3
Fn00A	Manual adjustment of speed reference offset	○	8.5.3
Fn00B	Manual adjustment of torque reference offset	○	8.7.3
Fn00C	Manual zero-adjustment of analog monitor output	○	–
Fn00D	Manual gain-adjustment of analog monitor output	○	–
Fn00E	Automatic offset-adjustment of motor current detection signal	○	7.2.6
Fn00F	Manual offset-adjustment of motor current detection signal	○	7.2.7
Fn010	Password setting (protects parameters from being changed.)		7.2.8
Fn011	Motor models display		7.2.9
Fn012	Software version display		7.2.10
Fn013	Multiturn limit value setting change when a Multiturn Limit Disagreement alarm (A.CC) occurs	○	8.4.7
Fn014	Application module detection results clear	○	7.2.11

Note: When the parameters marked with "○" in remarks column are set for Write Prohibited Setting (Fn010), the indication shown below appears and such parameters cannot be changed.

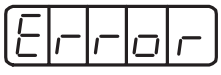

Blinks for one second

11.3.2 List of Parameters

(1) Parameter Display

Parameter settings are displayed as shown below.

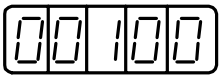

Decimal display
in five digit

(2) Definition of Display for Function Selection Parameters

Each digit of the function selection parameters has a meaning.

For example, the rightmost digit of parameter Pn000 is expressed as “Pn000.0.”

IMPORTANT

1. Each digit of the function selection parameters is defined as shown below. The following explains the purpose of each digit of a parameter.

- Pn000.0 or n.×××□: Indicates the value for the 1st digit of parameter Pn000.
- Pn000.1 or n.××□×: Indicates the value for the 2nd digit of parameter Pn000.
- Pn000.2 or n.×□××: Indicates the value for the 3rd digit of parameter Pn000.
- Pn000.3 or n.□×××: Indicates the value for the 4th digit of parameter Pn000.

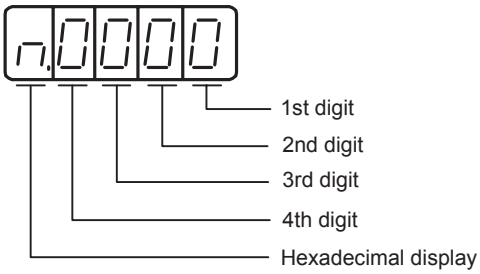

How to Display Parameters

2. After changing the parameters with “After restart” mentioned in “Setting Validation” column in the table on the following pages, turn OFF the main circuit and control power supplies and then turn them ON again to enable the new settings.

Parameter No.	Name	Setting Range	Units	Factory Setting	Setting Validation	Reference Section
Pn000	Function Selection Basic Switches	–	–	0000	After restart	

n. □ □ □ □ (4th digit, 3rd digit, 2nd digit, 1st digit)

Direction Selection
(Refer to "8.3.2 Switching the Servomotor Rotation Direction.")

0	Sets CCW as forward direction.
1	Sets CW as forward direction (Reverse Rotation Mode).
2 and 3	Reserved (Do not change.)

Control Method Selection
(Refer to "8.2 Control Mode Selection.")

0	Speed control (analog reference)
1	Position control (pulse train reference)
2	Torque control (analog reference)
3	Internal set speed control (contact reference)
4	Internal set speed control (contact reference) ⇔ Speed control (analog reference)
5	Internal set speed control (contact reference) ⇔ Position control (pulse train reference)
6	Internal set speed control (contact reference) ⇔ Torque control (analog reference)
7	Position control (pulse train reference) ⇔ Speed control (analog reference)
8	Position control (pulse train reference) ⇔ Torque control (analog reference)
9	Torque control (analog reference) ⇔ Speed control (analog reference)
A	Speed control (analog reference) ⇔ Zero clamp
B	Position control (pulse train reference) ⇔ Position control (Inhibit)

Axis Address

0 to F	Sets SERVOPACK axis address (Function supported by PC software SigmaWin 100/200).

Rotation Type/Linear Type Startup Selection (When the Encoder is not Connected)

0	Starts up as rotation type.
1	Starts up as linear type.

Parameter No.	Name	Setting Range	Units	Factory Setting	Setting Validation	Reference Section
Pn001	Function Selection Application Switches 1	–	–	0000	After restart	

n. [4th digit] [3rd digit] [2nd digit] [1st digit]

Servo OFF or Alarm Stop Mode
(Refer to "8.3.5 Selecting the Stopping Method After Servo OFF.")

0	Stops the motor by applying dynamic brake (DB).
1	Stops the motor by applying dynamic brake (DB) and then releases DB.
2	Makes the motor coast to a stop state without using the dynamic brake (DB).

Overtravel (OT) Stop Mode
(Refer to "8.3.3 Setting the Overtravel Limit Function.")

0	Same setting as Pn001.0 (Stops the motor by applying DB or by coasting).
1	Sets the torque of Pn406 to the maximum value, decelerate the motor to a stop, and then sets it to servolock state.
2	Sets the torque of Pn406 to the maximum value, decelerates the motor to a stop, and then sets it to coasting state.

AC/DC Power Input Selection
(Refer to "6.1.3 Typical Main Circuit Wirning Examples.")

0	Not applicable to DC power input: Input AC power supply through L1, L2 (, and L3) terminals.
1	Applicable to DC power input: Input DC power supply between ⊕1 and ⊖.

Warning Code Output Selection
(Refer to "10.1.2 Warning Display.")

0	ALO1, ALO2, and ALO3 output only alarm codes.
1	ALO1, ALO2, and ALO3 output both alarm codes and warning codes. While warning codes are output, ALM signal output remains ON (normal state).

Parameter No.	Name	Setting Range	Units	Factory Setting	Setting Validation	Reference Section
Pn002	Function Selection Application Switches 2	–	–	0000	After restart	

n. □ □ □ □ (4th digit, 3rd digit, 2nd digit, 1st digit)

Speed Control Option (T-REF Terminal Allocation)

0	N/A
1	Uses T-REF as an external torque limit input. (Refer to "8.9.3 Torque Limiting Using an Analog Voltage Reference.")
2	Uses T-REF as a torque feed forward input. (Refer to "9.4.2 Torque Feed-forward.")
3	Uses T-REF as an external torque limit input when P-CL and N-CL are ON. (Refer to "8.9.4 Torque Limiting Using an External Torque Limit and Analog Voltage Reference.")

Torque Control Option (V-REF Terminal Allocation)
(Refer to "8.7.4 Limiting Servomotor Speed during Torque Control.")

0	N/A
1	Uses V-REF as an external speed limit input.

Absolute Encoder Usage
(Refer to "8.4.2 Selecting an Absolute Encoder.")

0	Uses absolute encoder as an absolute encoder.
1	Uses absolute encoder as an incremental encoder.

Reserved (Do not change)

Parameter No.	Name	Setting Range	Units	Factory Setting	Setting Validation	Reference Section
Pn003	Function Selection Application Switches 3	–	–	0002	After restart	–

n. □□□□ (4th digit, 3rd digit, 2nd digit, 1st digit)

Analog Monitor 1 Torque Reference Monitor (Refer to "9.5 Analog Monitor.")

0	Motor speed: 1 V/1000 min^{-1}
1	Speed reference: 1 V/1000 min^{-1}
2	Torque reference: 1 V/100%
3	Position error: 0.05 V/1 reference unit
4	Position error: 0.05 V/100 reference units
5	Reference pulse frequency (converted to min^{-1}): 1 V/1000 min^{-1}
6	Motor speed × 4: 1 V/250 min^{-1}
7	Motor speed × 8: 1 V/150 min^{-1}
8 to F	Reserved (Do not change)

Analog Monitor 2 Speed Reference Monitor (Refer to "9.5 Analog Monitor.")

0 to F	Same as Analog Monitor 1 Torque Reference Monitor

Reserved (Do not change)

Reserved (Do not change)

Pn004	Reserved (Do not change)	–	–	0000	Immediately	–
Pn005	Reserved (Do not change)	–	–	0000	Immediately	–
Pn100	Speed Loop Gain	1 to 2000 Hz	1 Hz	40 Hz	Immediately	9.3.4
Pn101	Speed Loop Integral Time Constant	0.15 to 512.00 ms	0.01 ms	20.00 ms	Immediately	9.3.5
Pn102	Position Loop Gain	1 to 2000/s	1/s	40/s	Immediately	9.3.3
Pn103	Moment of Inertia Ratio	0 to 10000%	1%	0%	Immediately	9.2.6 9.3.3
Pn104	2nd Speed Loop Gain	1 to 2000 Hz	1 Hz	40 Hz	Immediately	9.4.7
Pn105	2nd Speed Loop Integral Time Constant	0.15 to 512.00 ms	0.01 ms	20.00 ms	Immediately	9.4.7
Pn106	2nd Position Loop Gain	1 to 2000/s	1/s	40/s	Immediately	9.4.7
Pn107	Bias	0 to 450 min^{-1}	1 min^{-1}	0 min^{-1}	Immediately	9.4.6
Pn108	Bias Width Addition	0 to 250 reference units	Reference unit	7 reference units	Immediately	9.4.6
Pn109	Feed-forward	0 to 100%	1%	0%	Immediately	9.4.1

Parameter No.	Name	Setting Range	Units	Factory Setting	Setting Validation	Reference Section
Pn10A	Feed-forward Filter Time Constant	0.00 to 64.00 ms	0.01 ms	0.00 ms	Immediately	9.4.1
Pn10B	Gain-related Application Switches	–	–	0000	After restart/ Immediately	9.4.3 9.4.9
Pn10C	Mode Switch Torque Reference	0 to 800%	1%	200%	Immediately	9.4.5
Pn10D	Mode Switch Speed Reference	0 to 10000 min^{-1}	1 min^{-1}	0 min^{-1}	Immediately	9.4.5
Pn10E	Mode Switch Acceleration	0 to 3000 min^{-1}/ s	1 min^{-1}/ s	0 min^{-1}/ s	Immediately	9.4.5
Pn10F	Mode Switch Error Pulse	0 to 10000 reference units	1 reference unit	0 reference unit	Immediately	9.4.5

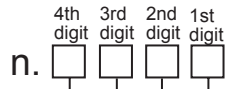

Mode Switch Selection (Refer to "9.4.5 Using the Mode Switch (P/PI Switching).")		Setting Validation
0	Uses internal torque reference as the condition (Level setting: Pn10C)	Immediately
1	Uses speed reference as the condition (Level setting: Pn10D)	Immediately
2	Uses acceleration as the condition (Level setting: Pn10E)	Immediately
3	Uses position error pulse as the condition (Level setting: Pn10F)	Immediately
4	No mode switch function available	Immediately

Speed Loop Control Method (Refer to "9.3.5 Speed Loop Integral Time Constant.")		Setting Validation
0	PI control	After restart
1	IP control	After restart
2 and 3	Reserved (Do not change)	After restart

Reserved (Do not change)

Reserved (Do not change)

Parameter No.	Name	Setting Range	Units	Factory Setting	Setting Validation	Reference Section
Pn110	Online Autotuning Switches *1	–	–	0010	After restart/ Immediately	–

n. [4th digit] [3rd digit] [2nd digit] [1st digit]

Online Autotuning Method (Refer to "9.2.3 Selecting the Online Autotuning Execution Method.")		Setting Validation
0	Tunes only at the beginning of operation.	After restart
1	Always tunes.	
2	Does not perform autotuning.	

Speed Feedback Compensation Selection (Refer to "9.4.8 Speed Feedback Compensation.")		Setting Validation
0	Applicable	Immediately
1	N/A	

Friction Compensation Selection		Setting Validation
0	Friction compensation: Disabled	Immediately
1	Friction compensation: Small	
2	Friction compensation: Large	

Reserved (Do not change)

Pn111	Speed Feedback Compensation *2	1 to 500%	1%	100%	Immediately	9.4.8
Pn112	Reserved (Do not change)	–	–	100%	–	–
Pn113				1000		
Pn114				200		
Pn115				32		
Pn116				16		
Pn117				100%		
Pn118				100%		
Pn119				50 /s		
Pn11A				1000%		
Pn11B				50 Hz		
Pn11C				70 Hz		
Pn11D				100%		
Pn11E				100%		
Pn11F				0 ms		
Pn120				0 ms		
Pn121				50 Hz		
Pn122				0 Hz		
Pn123				0%		

* 1. Pn110.1 and Pn110.2 will be effective when online.
* 2. The parameter Pn111 setting is enabled only when the parameter Pn110.1 is set to 0.

Parameter No.	Name	Setting Range	Unit	Factory Setting	Setting Validation	Reference Section
Pn200	Position Control References Selection Switches	–	–	0000	After restart	8.6.1
Pn201	PG Divider	16 to 16384 P/rev	1 P/rev	16384 P/rev	After restart	8.5.7
Pn202	Electronic Gear Ratio (Numerator)	1 to 65535	–	4	After restart	8.6.2
Pn203	Electronic Gear Ratio (Denominator)	1 to 65535	–	1	After restart	8.6.2
Pn204	Position Reference Accel/Decel Time Constant	0.00 to 64.00 ms	0.01 ms	0.00 ms	Immediately	8.6.4
Pn205	Multiturn Limit Setting *	0 to 65535 rev	rev	65535 rev	After restart	8.4.7
Pn206	Reserved (Do not change)	–	–	16384 P/rev	–	–

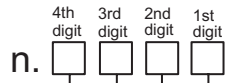

Reference Pulse Form

0	Sign + Pulse, positive logic
1	CW + CCW, positive logic
2	Phase A + Phase B (×1), positive logic
3	Phase A + Phase B (×2), positive logic
4	Phase A + Phase B (×4), positive logic
5	Sign + Pulse, negative logic
6	CW + CCW, negative logic
7	Phase A + Phase B (×1), negative logic
8	Phase A + Phase B (×2), negative logic
9	Phase A + Phase B (×4), negative logic

Error Counter Clear Signal From

0	Clears error counter when the signal is at H level.
1	Clears error counter at the rising edge of the signal.
2	Clears error counter when the signal is at L level.
3	Clears error counter at the falling edge of the signal.

Clear Operation

0	Clears error counter at the baseblock.
1	Does not clear error counter (Possible to clear error counter only with CLR signal).
2	Clears error counter when an alarm occurs.

Filter Selection

0	Reference input filter for line driver signals
1	Reference input filter for open collector signals

* The multiturn limit must be changed only for special applications. Changing this limit inappropriately or unintentionally can be dangerous.

Parameter No.	Name	Setting Range	Unit	Factory Setting	Setting Validation	Reference Section
Pn207	Position Control Function Switches	–	–	0000	After restart	–
	n. □□□□ (4th digit, 3rd digit, 2nd digit, 1st digit) **Position Reference Filter Selection (Refer to "8.6.4 Smoothing.")** 0: Acceleration/deceleration filter 1: Average movement filter **Position Control Option (Refer to "9.4.3 Speed Feed-forward.")** 0: N/A 1: Uses V-REF as a speed feed-forward input. **Reserved (Do not change)** **Reserved (Do not change)**					
Pn208	Position Reference Movement Averaging Time	0.00 to 64.00 ms	0.01 ms	0.00 ms	After restart	8.6.4
Pn300	Speed Reference Input Gain	1.50 to 30.00 V / rated speed	0.01V / rated speed	6.00 V / rated speed	Immediately	8.5.1 8.7.4 9.4.3
Pn301	Speed 1	0 to 10000 min^{-1}	1 min^{-1}	100 min^{-1}	Immediately	8.8.1
Pn302	Speed 2	0 to 10000 min^{-1}	1 min^{-1}	200 min^{-1}	Immediately	8.8.1
Pn303	Speed 3	0 to 10000 min^{-1}	1 min^{-1}	300 min^{-1}	Immediately	8.8.1
Pn304	JOG Speed	0 to 10000 min^{-1}	1 min^{-1}	500 min^{-1}	Immediately	8.1.1
Pn305	Soft Start Acceleration Time	0 to 10000 ms	1 ms	0 ms	Immediately	8.5.4
Pn306	Soft Start Deceleration Time	0 to 10000 ms	1 ms	0 ms	Immediately	8.5.4
Pn307	Speed Reference Filter Time Constant	0.00 to 655.35 ms	0.01 ms	0.40 ms	Immediately	8.5.5
Pn308	Speed Feedback Filter Time Constant	0.00 to 655.35 ms	0.01 ms	0.00 ms	Immediately	9.4.7
Pn400	Torque Reference Input Gain	1.0 to10.0 V /rated torque	0.1 V/rated torque	3.0 V/ rated torque	Immediately	8.7.1 8.9.3 8.9.4 9.4.2
Pn401	Torque Reference Filter Time Constant	0.00 to 655.35 ms	0.01 ms	1.00 ms	Immediately	9.4.10
Pn402	Forward Torque Limit	0 to 800%	1%	800%	Immediately	8.9.1
Pn403	Reverse Torque Limit	0 to 800%	1%	800%	Immediately	8.9.1
Pn404	Forward External Torque Limit	0 to 800%	1%	100%	Immediately	8.9.2 8.9.4
Pn405	Reverse External Torque Limit	0 to 800%	1%	100%	Immediately	8.9.2 8.9.4

Parameter No.	Name	Setting Range	Unit	Factory Setting	Setting Validation	Reference Section
Pn406	Emergency Stop Torque	0 to 800%	1%	800%	Immediately	8.3.3
Pn407	Speed Limit during Torque Control	0 to 10000 min^{-1}	1 min^{-1}	10000 min^{-1}	Immediately	8.7.4
Pn408	Torque Function Switches	–	–	0000	Immediately	9.4.10
Pn409	Notch Filter Frequency	50 to 2000 Hz	1 Hz	2000 Hz	Immediately	9.4.10
Pn500	Positioning Completed Width	0 to 250 reference units	1 reference unit	7 reference units	Immediately	8.6.5
Pn501	Zero Clamp Level	0 to 10000 min^{-1}	1 min^{-1}	10 min^{-1}	Immediately	8.5.6
Pn502	Rotation Detection Level	1 to 10000 min^{-1}	1 min^{-1}	20 min^{-1}	Immediately	8.11.3
Pn503	Speed Coincidence Signal Output Width	0 to 100 min^{-1}	1 min^{-1}	10 min^{-1}	Immediately	8.5.8
Pn504	NEAR Signal Width	1 to 250 reference units	1 reference unit	7 reference units	Immediately	8.6.6
Pn505	Overflow Level	1 to 8388352	1 reference unit	262144 reference units	Immediately	9.3.3
Pn506	Brake Reference - Servo OFF Delay Time	1 to 50 (10 to 500 ms)	10 ms	10 ms	Immediately	8.3.4
Pn507	Brake Reference Output Speed Level	0 to 10000 min^{-1}	1 min^{-1}	100 min^{-1}	Immediately	8.3.4
Pn508	Timing for Brake Reference Output during Motor Operation	10 to 100 (100 to 1000 ms)	10 ms	500 ms	Immediately	8.3.4
Pn509	Momentary Hold time	20 to 1000 ms	1 ms	20 ms	Immediately	8.3.6

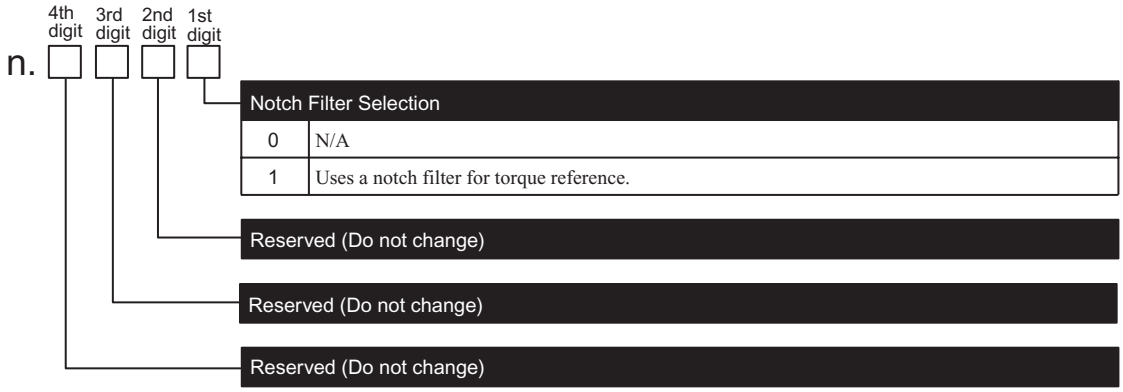

Parameter No.	Name	Setting Range	Unit	Factory Setting	Setting Validation	Reference Section
Pn50A	Input Signal Selections 1	–	–	2100	After restart	–

n. [4th digit] [3rd digit] [2nd digit] [1st digit]

Input Signal Allocation Mode
(Refer to "7.3.2 Input Circuit Signal Allocation.")

0	Uses the sequence input signal terminals with standard allocation.*
1	Changes the sequence input signal allocation for each signal.

/S-ON Signal Mapping
Signal Polarity: Normal; Servo ON when ON (L-level)
Signal Polarity: Reverse; Servo ON when OFF (H-level)
(Refer to "8.3.1 Setting the Servo ON Signal.")

0	ON when CN1-40 input signal is ON (L-level).
1	ON when CN1-41 input signal is ON (L-level).
2	ON when CN1-42 input signal is ON (L-level).
3	ON when CN1-43 input signal is ON (L-level).
4	ON when CN1-44 input signal is ON (L-level).
5	ON when CN1-45 input signal is ON (L-level).
6	ON when CN1-46 input signal is ON (L-level).
7	Sets signal ON.
8	Sets signal OFF.
9	OFF when CN1-40 input signal is OFF (H-level).
A	OFF when CN1-41 input signal is OFF (H-level).
B	OFF when CN1-42 input signal is OFF (H-level).
C	OFF when CN1-43 input signal is OFF (H-level).
D	OFF when CN1-44 input signal is OFF (H-level).
E	OFF when CN1-45 input signal is OFF (H-level).
F	OFF when CN1-46 input signal is OFF (H-level).

/P-CON Signal Mapping (P control when ON (L-level))
(Refer to "9.4.4 Proportional Control Operation (Proportional Operation Reference).")

0 to F	Same as /S-ON

P-OT Signal Mapping (Overtravel when OFF (H-level))
(Refer to "8.3.3 Setting the Overtravel Limit Function.")

0	Forward run allowed when CN1-40 input signal is ON (L-level).
1	Forward run allowed when CN1-41 input signal is ON (L-level).
2	Forward run allowed when CN1-42 input signal is ON (L-level).
3	Forward run allowed when CN1-43 input signal is ON (L-level).
4	Forward run allowed when CN1-44 input signal is ON (L-level).
5	Forward run allowed when CN1-45 input signal is ON (L-level).
6	Forward run allowed when CN1-46 input signal is ON (L-level).
7	Forward run prohibited.
8	Forward run allowed.
9	Forward run allowed when CN1-40 input signal is OFF (H-level).
A	Forward run allowed when CN1-41 input signal is OFF (H-level).
B	Forward run allowed when CN1-42 input signal is OFF (H-level).
C	Forward run allowed when CN1-43 input signal is OFF (H-level).
D	Forward run allowed when CN1-44 input signal is OFF (H-level).
E	Forward run allowed when CN1-45 input signal is OFF (H-level).
F	Forward run allowed when CN1-46 input signal is OFF (H-level).

* When Pn50A.0 is set to 0 for the input signal standard allocation mode, the following modes are compatible: Pn50A.1 = 7, Pn50A.3 = 8, and Pn50B.0 = 8.

Parameter No.	Name	Setting Range	Unit	Factory Setting	Setting Validation	Reference Section
Pn50B	Input Signal Selections 2	–	–	6543	After restart	–

n. [4th digit] [3rd digit] [2nd digit] [1st digit]

N-OT Signal Mapping (Overtravel when OFF (H-level)) (Refer to "8.3.3 Setting the Overtravel Limit Function.")

0	Reverse run allowed when CN1-40 input signal is ON (L-level).
1	Reverse run allowed when CN1-41 input signal is ON (L-level).
2	Reverse run allowed when CN1-42 input signal is ON (L-level).
3	Reverse run allowed when CN1-43 input signal is ON (L-level).
4	Reverse run allowed when CN1-44 input signal is ON (L-level).
5	Reverse run allowed when CN1-45 input signal is ON (L-level).
6	Reverse run allowed when CN1-46 input signal is ON (L-level).
7	Reverse run prohibited.
8	Reverse run allowed.
9	Reverse run allowed when CN1-40 input signal is OFF (H-level).
A	Reverse run allowed when CN1-41 input signal is OFF (H-level).
B	Reverse run allowed when CN1-42 input signal is OFF (H-level).
C	Reverse run allowed when CN1-43 input signal is OFF (H-level).
D	Reverse run allowed when CN1-44 input signal is OFF (H-level).
E	Reverse run allowed when CN1-45 input signal is OFF (H-level).
F	Reverse run allowed when CN1-46 input signal is OFF (H-level).

/ALM-RST Signal Mapping (Alarm Reset when ON (L-level)) (Refer to "8.11.1 Servo Alarm Output (ALM) and Alarm Code Output (ALO1, ALO2, ALO3).")

0 to F	Same as N-OT

/P-CL Signal Mapping (Torque Limit when ON (L-level)) (Refer to "8.9.2 External Torque Limit (Output Torque Limiting by Input Signals).")

0 to F	Same as /S-OT, the setting of 2nd digit of Pn50A

/N-CL Signal Mapping (Torque Limit when ON (L-level)) (Refer to "8.9.2 External Torque Limit (Output Torque Limiting by Input Signals).")

0 to F	Same as /S-OT, the setting of 2nd digit of Pn50A

INFO

■ Input signal polarities

Signal	Effective Level	Voltage level	Contact
ON	Low (L) level	0 V	Close
OFF	High (H) level	24 V	Open

Parameter No.	Name	Setting Range	Unit	Factory Setting	Setting Validation	Reference Section
Pn50C	Input Signal Selections 3	–	–	8888	After restart	–

n. [4th digit] [3rd digit] [2nd digit] [1st digit]

/SPD-D Signal Mapping
(Refer to "8.8 Operating Using Speed Control with an Internally Set Speed.")

0	ON when CN1-40 input signal is ON (L-level).
1	ON when CN1-41 input signal is ON (L-level).
2	ON when CN1-42 input signal is ON (L-level).
3	ON when CN1-43 input signal is ON (L-level).
4	ON when CN1-44 input signal is ON (L-level).
5	ON when CN1-45 input signal is ON (L-level).
6	ON when CN1-46 input signal is ON (L-level).
7	Sets signal ON.
8	Sets signal OFF.
9	ON when CN1-40 input signal is OFF (H-level).
A	ON when CN1-41 input signal is OFF (H-level).
B	ON when CN1-42 input signal is OFF (H-level).
C	ON when CN1-43 input signal is OFF (H-level).
D	ON when CN1-44 input signal is OFF (H-level).
E	ON when CN1-45 input signal is OFF (H-level).
F	ON when CN1-46 input signal is OFF (H-level).

/SPD-A Signal Mapping □
(Refer to "8.8 Operating Using Speed Control with an Internally Set Speed.")

0 to F	Same as /SPD-D

/SPD-B Signal Mapping □
(Refer to "8.8 Operating Using Speed Control with an Internally Set Speed.")

0 to F	Same as /SPD-D

/C-SEL Signal Mapping (Control mode change when ON (L-level))
(Refer to "8.10.2 Switching the Control Mode.")

0 to F	Same as /SPD-D

Parameter No.	Name	Setting Range	Unit	Factory Setting	Setting Validation	Reference Section
Pn50D	Input Signal Selections 4	–	–	8888	After restart	–

n. 4th digit □ 3rd digit □ 2nd digit □ 1st digit □

/ZCLAMP Signal Mapping (Zero clamp when ON (L-level))
(Refer to "8.5.6 Using the Zero Clamp Function.")

0	ON when CN1-40 input signal is ON (L-level).
1	ON when CN1-41 input signal is ON (L-level).
2	ON when CN1-42 input signal is ON (L-level).
3	ON when CN1-43 input signal is ON (L-level).
4	ON when CN1-44 input signal is ON (L-level).
5	ON when CN1-45 input signal is ON (L-level).
6	ON when CN1-46 input signal is ON (L-level).
7	Sets signal ON.
8	Sets signal OFF.
9	ON when CN1-40 input signal is OFF (H-level).
A	ON when CN1-41 input signal is OFF (H-level).
B	ON when CN1-42 input signal is OFF (H-level).
C	ON when CN1-43 input signal is OFF (H-level).
D	ON when CN1-44 input signal is OFF (H-level).
E	ON when CN1-45 input signal is OFF (H-level).
F	ON when CN1-46 input signal is OFF (H-level).

/INHIBIT Signal Mapping (Reference pulse inhibit when ON (L-level))
(Refer to "8.6.7 Reference Pulse Inhibit Function (INHIBIT).")

0 to F	Same as /ZCLAMP

/G-SEL Signal Mapping (Gain change when ON (L-level))
(Refer to "9.4.9 Switching Gain Settings.")

0 to F	Same as /ZCLAMP

Reserved (Do not change)

Parameter No.	Name	Setting Range	Unit	Factory Setting	Setting Validation	Reference Section
Pn50E	Output Signal Selections 1	–	–	3211	After restart	–

n. □ □ □ □ (4th digit, 3rd digit, 2nd digit, 1st digit)

Positioning Completion Signal Mapping (/COIN)
(Refer to "8.6.5 Positioning Completed Output Signal.")

0	Disabled (the above signal is not used.)
1	Outputs the signal from CN1-25, 26 output terminal.
2	Outputs the signal from CN1-27, 28 output terminal.
3	Outputs the signal from CN1-29, 30 output terminal.

Speed Coincidence Detection Signal Mapping (/V-CMP)
(Refer to "8.5.8 Speed Coincidence Output.")

0 to 3	Same as /COIN

Rotation Detection Signal Mapping (/TGON)
(Refer to "8.11.3 Running Output Signal (/TGON).")

0 to 3	Same as /COIN

Servo Ready Signal Mapping (/S-RDY)
(Refer to "8.11.4 Servo Ready (/S-RDY) Output.")

0 to 3	Same as /COIN

Pn50F	Output Signal Selections 2	–	–	0000	After restart	–

n. □ □ □ □ (4th digit, 3rd digit, 2nd digit, 1st digit)

Torque Limit Detection Signal Mapping (/CLT)
(Refer to "8.9.5 Checking Output Torque Limiting during Operation.")

0	Disabled (the above signal is not used.)
1	Outputs the signal from CN1-25, -26 output terminal.
2	Outputs the signal from CN1-27, -28 output terminal.
3	Outputs the signal from CN1-29, -30 output terminal.

Speed Limit Detection Signal Mapping (/VLT)
(Refer to "8.7.4 Limiting Servomotor Speed during Torque Control.")

0 to 3	Same as /CLT

Brake Interlock Signal Mapping (/BK)
(Refer to "8.3.4 Setting for Holding Brakes.")

0 to 3	Same as /CLT

Warning Signal Mapping (/WARN)
(Refer to "8.11.2 Warning Output (/WARN).")

0 to 3	Same as /CLT

Parameter No.	Name	Setting Range	Unit	Factory Setting	Setting Validation	Reference Section
Pn510	Output Signal Selections 3	–	–	0000	After restart	–
Pn511	Reserved (Do not change)	–	–	8888	Immediately	–
Pn512	Output Signal Reversal Settings	–	–	0000	After restart	7.3.3
Pn600	Regenerative Resistor Capacity *1	Depends on SERVOPACK Capacity *2	10 W	0 W	Immediately	6.5
Pn601	Reserved (Do not change)	Depends on SERVOPACK Capacity *2	–	0 W	Immediately	–

Pn510 — n. □□□□ (4th digit, 3rd digit, 2nd digit, 1st digit)

1st digit: Near Signal Mapping (/NEAR) (Refer to "8.6.6 Positioning Near Signal.")

0	Disabled (the above signal is not used.)
1	Outputs the signal from CN1-25 or -26 terminals.
2	Outputs the signal from CN1-27 or -28 terminals.
3	Outputs the signal from CN1-29 or -30 terminals.

2nd digit: Reserved (Do not change)

3rd digit: Reserved (Do not change)

4th digit: Reserved (Do not change)

Pn512 — n. □□□□ (4th digit, 3rd digit, 2nd digit, 1st digit)

1st digit: Output Signal Reversal for CN1-25 or -26 Terminals

0	Output signal is not reversed.
1	Output signal is reversed.

2nd digit: Output Signal Reversal for CN1-27 or -28 Terminals

0	Output signal is not reversed.
1	Output signal is reversed.

3rd digit: Output Signal Reversal for CN1-29 or -30 Terminals

0	Output signal is not reversed.
1	Output signal is reversed.

4th digit: Reserved (Do not change)

* 1. Normally set to “0.” When using an external regenerative resistor, set the allowable power loss (W) of the regenerative resistor.
* 2. The upper limit is the maximum output capacity (W) of the SERVOPACK.

11.3.3 Monitor Modes

The following list shows monitor modes available.

Parameter No.	Content of Display	Unit
Un000	Actual motor speed	min^{-1}
Un001	Input speed reference	min^{-1}
Un002	Internal torque reference (Value for rated torque)	%
Un003	Rotation angle 1 (Number of pulses from the zero point:16-bit decimal code)	pulse
Un004	Rotation angle 2 (Angle from the zero point (electrical angle))	deg
Un005	Input signal monitor	–
Un006	Output signal monitor	–
Un007	Input reference pulse speed (displayed only in position control mode)	min^{-1}
Un008	Error counter value (amount of position error) (displayed only in position control mode)	reference unit
Un009	Accumulated load rate (Value for the rated torque as 100%: Displays effective torque in 10 s cycle.)	%
Un00A	Regenerative load rate (Value for the processable regenerative power as 100%: Displays regenerative power consumption in 10 s cycle.)	%
Un00B	Power consumed by DB resistance (Value for the processable power when dynamic brake is applied as 100%: Displays DB power consumption in 10 s cycle.)	%
Un00C	Input reference pulse counter (hexadecimal code) (displayed only in position control mode)	-
Un00D	Feedback pulse counter (hexadecimal code)	-

11.4 Parameter Recording Table

Use the following table for recording parameters.

Note: Setting validation ("immediately" or "after restart") for Pn10B and Pn110 differs depending on the digit. The digits validated after restart are underlined in "Factory Setting" column.

Parameter No.	Factory Setting						Name	Setting Validation
Pn000	0000						Function Selection Basic Switches	After restart
Pn001	0000						Function Selection Application Switches 1	After restart
Pn002	0000						Function Selection Application Switches 2	After restart
Pn003	0002						Function Selection Application Switches 3	After restart
Pn004	0000						Reserved (Do not change)	Immediately
Pn005	0000						Reserved (Do not change)	Immediately
Pn100	40 Hz						Speed Loop Gain	Immediately
Pn101	20.00 ms						Speed Loop Integral Time Constant	Immediately
Pn102	40 /s						Position Loop Gain	Immediately
Pn103	0%						Moment of Inertia Ratio	Immediately
Pn104	40 Hz						2nd Speed Loop Gain	Immediately
Pn105	20.00 ms						2nd Loop Integral Time Constant	Immediately
Pn106	40 /s						2nd Position Loop Gain	Immediately
Pn107	0 min^{-1}						Bias	Immediately
Pn108	7 reference units						Bias Width Addition	Immediately
Pn109	0%						Feed-forward	Immediately
Pn10A	0.00 ms						Feed-forward Filter Time Constant	Immediately
Pn10B	0000						Gain-related Application Switches	After restart
Pn10C	200%						Mode Switch Torque Reference	Immediately
Pn10D	0 min^{-1}						Mode Switch Speed Reference	Immediately
Pn10E	0 min^{-1}/s						Mode Switch Acceleration	Immediately
Pn10F	0 reference units						Mode Switch Error Pulse	Immediately
Pn110	0010						Online Autotuning Switches	After restart
Pn111	100%						Speed Feedback Compensation	Immediately
Pn112	100%						Reserved (Do not change)	Immediately
Pn113	1000						Reserved (Do not change)	Immediately
Pn114	200						Reserved (Do not change)	Immediately
Pn115	32						Reserved (Do not change)	Immediately
Pn116	16						Reserved (Do not change)	Immediately
Pn117	100%						Reserved (Do not change)	Immediately
Pn118	100%						Reserved (Do not change)	Immediately
Pn119	50 /s						Reserved (Do not change)	Immediately
Pn11A	1000%						Reserved (Do not change)	Immediately
Pn11B	50 Hz						Reserved (Do not change)	Immediately
Pn11C	70 Hz						Reserved (Do not change)	Immediately
Pn11D	100%						Reserved (Do not change)	Immediately
Pn11E	100%						Reserved (Do not change)	Immediately
Pn11F	0 ms						Reserved (Do not change)	Immediately

Parameter No.	Factory Setting						Name	Setting Validation
Pn120	0 ms						Reserved (Do not change)	Immediately
Pn121	50 Hz						Reserved (Do not change)	Immediately
Pn122	0 Hz						Reserved (Do not change)	Immediately
Pn123	0%						Reserved (Do not change)	Immediately
Pn200	0000						Position Control References Selection Switches	After restart
Pn201	16384 P/rev						PG Divider	After restart
Pn202	4						Electronic Gear Ratio (Numerator)	After restart
Pn203	1						Electronic Gear Ratio (Denominator)	After restart
Pn204	0.00 ms						Position Reference Accel/Decel Time Constant	Immediately
Pn205	65535 rev						Multiturn Limit Setting	After restart
Pn206	16384 P/rev						Reserved (Do not change)	–
Pn207	0000						Position Control Function Switches	After restart
Pn208	0.00 ms						Position Reference Movement Averaging Time	After restart
Pn300	6.00 V/ rated speed						Speed Reference Input Gain	Immediately
Pn301	100 min^{-1}						Speed 1	Immediately
Pn302	200 min^{-1}						Speed 2	Immediately
Pn303	300 min^{-1}						Speed 3	Immediately
Pn304	500 min^{-1}						JOG Speed	Immediately
Pn305	0 ms						Soft Start Acceleration Time	Immediately
Pn306	0 ms						Soft Start Deceleration Time	Immediately
Pn307	0.40 ms						Speed Reference Filter Time Constant	Immediately
Pn308	0.00 ms						Speed Feedback Filter Time Constant	Immediately
Pn400	3.0 V/ rated speed						Torque Reference Input Gain	Immediately
Pn401	1.00 ms						Torque Reference Filter Time Constant	Immediately
Pn402	800%						Forward Torque Limit	Immediately
Pn403	800%						Reverse Torque Limit	Immediately
Pn404	100%						Forward External Torque Limit	Immediately
Pn405	100%						Reverse External Torque Limit	Immediately
Pn406	800%						Emergency Stop Torque	Immediately
Pn407	10000 min^{-1}						Speed Limit during Torque Control	Immediately
Pn408	0000						Torque Function Switches	Immediately
Pn409	2000 Hz						Notch Filter Frequency	Immediately
Pn500	7 reference units						Positioning Completed Width	Immediately
Pn501	10 min^{-1}						Zero Clamp Level	Immediately
Pn502	20 min^{-1}						Rotation Detection Level	Immediately
Pn503	10 min^{-1}						Speed Coincidence Signal Output Width	Immediately
Pn504	7 reference units						NEAR Signal Width	Immediately
Pn505	262144 reference units						Overflow Level	Immediately

Parameter No.	Factory Setting						Name	Setting Validation
Pn506	10 ms						Brake Reference-Servo OFF Delay Time	Immediately
Pn507	100 min^{-1}						Brake Reference Output Speed Level	Immediately
Pn508	500 ms						Timing for Brake Reference Output during Motor Operation	Immediately
Pn509	20 ms						Momentary Hold Time	Immediately
Pn50A	2100						Input Signal Selections 1	After restart
Pn50B	6543						Input Signal Selections 2	After restart
Pn50C	8888						Input Signal Selections 3	After restart
Pn50D	8888						Input Signal Selections 4	After restart
Pn50E	3211						Output Signal Selections 1	After restart
Pn50F	0000						Output Signal Selections 2	After restart
Pn510	0000						Output Signal Selections 3	After restart
Pn511	8888						Reserved (Do not change)	Immediately
Pn512	0000						Output Signal Reversal Settings	After restart
Pn600	0 W						Regenerative Resistor Capacity	Immediately
Pn601	0 W						Reserved (Do not change)	Immediately

INDEX

A

absolute encoder battery - 2-28
absolute encoder reception sequence - 8-32
absolute encoder setup - 8-30
absolute encoders - 8-27
adjusting offset - 8-40
alarm code output - 8-77, 10-2
alarm display table - 10-2
alarm display table when the application module is used - - - - - - 10-5
alarm display table when the linear motor is used - - - - - - - - - - - 10-6
alarm reset - 8-77, 10-2
alarm traceback data clear (Fn006) - 7-12
alarm traceback data display (Fn000) - 7-9
alignment - 3-43
allocating input signals - 7-25
allocating output signals - 7-27
ALM - 6-15
ALM-RST - 6-14, 7-3
ALO - 6-15
ambient/storage temperature - 4-5
analog monitor - 9-28
analog monitor cable - 2-27
analog monitoring - 4-6
angular transmission error accuracy - 3-46
application module - 2-28
application module detection results clear (Fn014) - - - - - - - - - - 7-18
attaching the ferrite core - 6-26
automatic offset-signal adjustment of motor current detection signal (Fn00E) - 7-13
autotuning functions - 9-3

B

ball screw - 8-52
base-mounted type - 4-23
BAT - 6-14
battery
absolute encoder battery - 5-72
belt and pulley - 8-52
bias setting - 4-5
BK - 6-15
brake power supply unit - 5-67
brake power supply units
selection - 2-31
built-in open collector power supply - 4-5
built-in panel operator - 7-2

C

cable selection
SGMAH and SGMPH servomotors - - - - - - - - - - - - - - - - - - 2-17
SGMDH servomotors - 2-22
SGMGH servomotors - 2-22
SGMSH servomotors - 2-22
SGMUH servomotors - 2-22
cables for analog monitor - 5-65
cables for connecting personal computers - - - - - - - - - - - - - - - - - 5-63
calculating the required capacity of regenerative resistors - - - - - 11-7
CE marking - 1-10
checking products - 1-2
clear signal form selection - 8-49
CLR - 6-14
CLT - 6-15
CN1
terminal layout - 6-13
CN2 terminal layout - 6-9
COIN - 6-15
connecting a reactor - 6-32
connecting external regenerative resistors - - - - - - - - - - - - - - - - - 6-33
connecting regenerative resistors - 6-33
connecting the digital operator - 7-2
connection cable for digital operator - 2-27
connection cable for personal computer - - - - - - - - - - - - - - - - - - 2-27
connection to host controller - 11-16
connector terminal block converter unit - - - - - - - - - - - - - - - - - - 5-66
connectors and cables for encoder signals - - - - - - - - - - - - - - - - - 5-55
continuous output current - 4-3, 4-4
control method - 4-5
control mode selection - 8-17, 8-75

D

DATA/ENTER key - 7-3
DATA/SHIFT key - 7-3
DC reactors - 5-86
selection - 2-30
deviceNet I/F unit - 5-91
digital operator - 2-27, 5-64
key names and functions - 7-3
status display - 7-6
types - 7-2
disc table - 8-52
DOWN key - 7-3
DSPL/SET key - 7-3
dynamic brake - 4-6

E

electronic gear - 4-6
electronic gear ratio equation - 8-52
EMC installation conditions - 6-23
encoder cables - 5-48
encoder signal converter unit - 5-89
encoder signal output - 8-45
external regenerative resistor - 5-69
external torque limit - 8-70

F

feed forward compensation - 4-5
feed-forward reference - 9-15
flexible cables - 5-59
wiring precautions - 5-59
forward rotation prohibited - 8-20
frequency characteristics - 4-5
fully-closed I/F unit - 5-96
fuse capacity - 2-29

G

ground noise - 3-46
grounding - 6-20

H

handling batteries - 8-29
handling oil and water- 3-44
hot start - 4-19

I

I/O signal (CN1) names and functions - 6-14
I/O signal cables - 2-27, 5-60
I/O signal connections- 6-10
impact acceleration- 3-45
impact occurrences- 3-45
impact resistance - 3-45
INDEXER module - 5-94
input circuit signal allocation - 7-23
input signal monitor display- 7-29
instantaneous power loss settings - 8-26
interface for reference input circuits - 6-16
analog input circuit- 6-16
position reference input circuit - 6-16
internal torque limit - 8-69

L

LEFT key - 7-3
limiting torque- 8-69
list of parameter- 11-26
list of utility function modes - 7-8
load moment of inertia - 4-20
load regulation- 4-5
lost motion - 3-46

M

magnetic contactor - 5-80
magnetic contactors
selection - 2-30
main circuit wiring examples - 6-5
manual adjustment of the torque reference offset- - - - - - - - - - - - 8-63
manual offset-adjustment of the motor current detection signal
(Fn00F) - 7-14
manual tuning - 9-12
mating concentricity of the flange- 3-44
max. allowable input motor speed- 3-46
max. output current- 4-3, 4-4
mechanical tolerance - 3-44
MECHATROLINK-I I/F unit - 5-90
mode switch (P/PI switching)- 9-19
MODE/SET key- 7-3
molded-case circuit breaker - 5-73
molded-case circuit breaker (MCCB) - 2-29
monitor display
feedback pulse counter - 7-31
reference pulse counter - 7-31
monitor mode - 7-28
motor models display (Fn011) - 7-16
multiturn limit setting - 8-36

N

names and functions of main circuit terminals- - - - - - - - - - - - - - - 6-2
N-CL - 6-14
NEAR - 6-15
noise data - 3-46
noise filter for brake power supplies - 6-21
noise filters- 6-21
selection- 2-30
noise interference - 6-19
N-OT- 6-14
notch filter - 9-26

O

online autotuning- 9-5
machine rigidity setting - 9-8
saving the results- 9-10
operating using position control - 8-48
operating using speed control with an internally set speed - - - - - 8-66
operating using speed control with analog reference - - - - - - - - - 8-38
operating using torque control - 8-61
operation in monitor mode - 7-30
output circuit interface - 6-17
line driver output circuit - 6-17
open-collector output circuit - 6-18
photocoupler output circuit - 6-18
output circuit signal allocation- 7-26
output signal monitor display- 7-30
overshooting- 9-19
overtravel stop - 4-6

P

panel operator
key names and functions- 7-3
status display - 7-6
PAO - 6-15
PAO serial data specifications - 8-33
parameter setting mode- 7-19
parameter settings initialization (Fn005) - - - - - - - - - - - - - - - - - - 7-11
parameters - 7-20, 7-22
example of changing function selection- - - - - - - - - - - - - - - - - 7-22
password setting (protects parameters from being changed)
(Fn010) - 7-15
PBO - 6-15
P-CL - 6-14
PCO - 6-15
P-CON- 6-14
peripheral device selection - 2-26
perpendicularity between the flange face and output shaft - - - - - 3-44
PL1 to 3 - 6-14
position control block diagram- 8-56
position control by host controller - 8-16
position loop gain - 9-13
positioning completed output signal - 8-58
positioning completed width setting - 4-5
positioning near signal - 8-59
positioning time reduction functions- 9-3
P-OT - 6-14
product part names- 1-4
PROFIBUS-DP I/F unit - 5-92
proportional control operation
(proportional operation reference) - 9-18
protection- 4-6
PSO- 6-15
PULS- 6-14
pulse dividing ratio setting - 8-46

R

rack-mounted type - 4-23
rated input motor speed - 3-46
rated torque - 3-46
reactors - 5-86
    DC reactor - 6-31
    selection- 2-30
reference pulse
    form - 4-5
    frequency - 4-5
    type - 4-5
reference pulse inhibit function (INHIBIT) - - - - - - - - - - - - - - - - 8-60
reference unit - 8-50
regenerative resistor - 4-20
regenerative resistor capacity - 6-35
regenerative resistor unit - 5-71
regenerative resistors
    selection- 2-31
replacing batteries - 8-30
replacing oil seal - 10-22
RESET key- 7-3
reverse rotation prohibited- 8-20
RIGHT key- 7-3
running output signal - 8-78
run-out at the end of the shaft - 3-44

S

selecting a position reference filter - 8-57
selecting an absolute encoder- 8-29
selecting the speed loop control method (PI Control or IP Control)9-14
selecting the stopping method after servo OFF - - - - - - - - - - - - - 8-25
SEN - 6-14
SEN signal connection - 8-28
sequence I/O signal monitor display - 7-29
sequence input - 4-6
sequence input circuit interface - 6-17
sequence output- 4-6
servo alarm (ALM) output - 10-2
servo alarm output (ALM) - 8-77
servo gain
    adjustment methods - 9-2
    explanation- 9-12
servo ready - 8-79
servo system configurations - 1-7
servomotor
    winding resistance loss - 11-11
servomotor inspection - 10-22
servomotor main circuit wire size and connectors - - - - - - - - - - - - 5-7
servomotors
    capacity selection examples- 11-2
    direction of servomotor rotation - 3-45
    inspection and maintenance- 10-22
    mechanical specifications - 3-43
    model designations - 2-2
    nameplate- 1-2
    overhanging loads - 4-22
    part names - 1-4
    precautions on servomotor installation - - - - - - - - - - - - - - - 3-43
    regenerative brake - 4-22
    winding resistance loss - 11-11
    wire size - 5-7
SERVOPACK inspection -10-22
SERVOPACK's parts replacement schedule - - - - - - - - - - - - - - -10-23
SERVOPACKs
    absorbable energy -11-14
    applicable servomotors - 2-16
    cable types - 5-45
    dimensional drawings - 4-23
    installation - 4-7
    internal block diagrams - 4-9
    load moment of inertia - 4-19
    model designations - 2-15
    nameplate - 1-3
    operating conditions - 4-7
    orientation - 4-8
    overload characteristics - 4-19
    power losses- 4-17
    power supply capacities - 4-17
    product part names - 1-5
    ratings and specifications - 4-3
    wire size - 5-45
setting a reference pulse form - 8-48
setting for holding brakes - 8-22
setting the electronic gear - 8-50
setting the overtravel limit function - 8-20
setting the servo ON signal - 8-18
setting the speed bias - 9-22
SGMAH and SGMPH servomotor connectors for standard
environments - 5-8
SGMAH servomotors (3000 min-1)
    derating rate for servomotor fitted with oil seal - - - - - - - - - - 3-5
    dimensional drawings - 3-49
    holding brake electrical specifications - - - - - - - - - - - - - - - - 3-6
    holding brake moment of inertia - 3-5
    torque-motor speed characteristics - - - - - - - - - - - - - - - - - - - 3-5
    with low-backlash gears - 3-8
    with standard backlash gears - 3-6
    without gears - 3-4
SGMDH servomotors (2000 min-1)
    connectors conforming to IP67 and european safety
    standards - 5-34
    connectors for standard environments- - - - - - - - - - - - - - - - - 5-19
    dimensional drawings -3-151
    holding brake electrical specifications - - - - - - - - - - - - - - - 3-40
    main circuit connector pin arrangement - - - - - - - - - - - - - - - 5-34
    servomotor main circuit connector pin arrangement - - - - - - 5-19
    torque-motor speed characteristics - - - - - - - - - - - - - - - - - - 3-40
    with holding brakes - 3-39
SGMGH servomotors (1000 min-1)
    connectors conforming to IP67 and european safety
    standards - 5-27
    connectors for standard environments- - - - - - - - - - - - - - - - - 5-15
    dimensional drawings -3-120
    holding brake electrical specifications - - - - - - - - - - - - - - - 3-28
    holding brake moment of inertia - 3-27
    main circuit connector pin arrangement - - - - - - - - - - - - - - - 5-16
    servomotor main circuit connector pin arrangement - - - - - - 5-29
    torque-motor speed characteristics - - - - - - - - - - - - - - - - - - - 3-27
    with low-backlash gears - 3-31
    with standard backlash gears - 3-29
    without gears - 3-26

SGMGH servomotors (1500 min-1)
connectors conforming to IP67 and european safety standards - 5-22
connectors for standard environments - - - - - - - - - - - - - - - - - 5-12
dimensional drawings - 3-94
holding brake electrical specifications - - - - - - - - - - - - - - - - - 3-20
holding brake moment of inertia - 3-19
main circuit connector pin arrangement - - - - - - - - - - - - - - - - 5-14
servomotor main circuit connector pin arrangement - - - - - - - 5-26
torque-motor speed characteristics - - - - - - - - - - - - - - - - - - 3-19
with low-backlash gears - 3-23
with standard backlash gears - 3-21
without gears - 3-17
SGMGH, SGMSH, SGMDH, and SGMUH servomotor connector configurations - 5-11
SGMPH servomotors (3000 min-1)
derating rate for servomotor with oil seal - - - - - - - - - - - - - - 3-12
dimensional drawings - 3-79
holding brake electrical specifications - - - - - - - - - - - - - - - - - 3-13
holding brake moment of inertia - 3-12
output shafts with oil seals - 3-93
torque-motor speed characteristics - - - - - - - - - - - - - - - - - - 3-12
with low-backlash gears - 3-15
with standard backlash gears - 3-13
without gears - 3-11
SGMSH servomotors (3000 min-1)
connectors conforming to IP67 and european safety standards - 5-30
connectors for standard environments - - - - - - - - - - - - - - - - - 5-17
dimensional drawings - 3-141
holding brake electrical specifications - - - - - - - - - - - - 3-35, 3-42
holding brake moment of inertia - - - - - - - - - - - - - - - - 3-34, 3-42
main circuit connector pin arrangement - - - - - - - - - - - 5-18, 5-20
servomotor main circuit connector pin arrangement - - - - - - - 5-33
torque-motor speed characteristics - - - - - - - - - - - - - - - - - - 3-35
with low-backlash gears - 3-36
without gears - 3-33
SGMUH servomotors (6000 min-1)
connectors conforming to IP67 and european safety standards - 5-35
connectors for standard environments - - - - - - - - - - - - - - - - - 5-19
dimensional drawings - 3-153
servomotor main circuit connector pin arrangement - - - - - - - 5-37
torque-motor speed characteristics - - - - - - - - - - - - - - - - - - 3-42
without holding brakes - 3-41
shaft end specifications for SGMGH, SGMSH and SGMDH servomotors - 3-156
shield box - 6-26
SigmaIndexer - 5-95
SIGN - 6-14
soft start - 8-43
soft start time setting - 4-5
software version display (Fn012) - 7-17
S-ON - 6-14
specifications and dimensional drawings of servomotor main circuit cable - 5-3
cables for 400 V SGMAH and SGMPH servomotors with brakes - 5-6
cables for 400 V SGMAH and SGMPH servomotors without brakes - 5-5
cables for SGMAH and SGMPH servomotors with brakes - - - 5-3
cables for SGMAH and SGMPH servomotors without brakes - 5-3
flexible cables for SGMAH and SGMPH servomotors with brakes - 5-5
flexible cables for SGMAH and SGMPH servomotors without brakes - 5-4
specifications of built-in regenerative resistor - - - - - - - - - - - - - - 6-34
speed coincidence output - 8-47
speed feedback compensation - 9-23
speed limit during torque control - 8-65
speed loop gain - 9-14
speed loop integral time constant - 9-14
speed regulation - 4-6
S-RDY - 6-15, 8-79
standard replacement period - 10-23
starting time - 4-20
stopping time - 4-20
surge suppressor - 5-84
surge suppressor for brake power supply - - - - - - - - - - - - - - - - - 5-85
surge suppressor for magnetic contactor - - - - - - - - - - - - - - - - - 5-84
surge suppressors
selection - 2-30
SVON key - 7-3
switching gain settings - 9-25
switching the servomotor rotation direction - - - - - - - - - - - - - - - 8-19

T

temperature regulation - 4-5
terms - 3-46
TGON - 6-15
through shaft section - 3-44
torque control tolerance - 4-5
torque limiting using an analog voltage reference - - - - - - - - - - - 8-72
torque reference filter - 9-26
torsion rigidity - 3-46
T-REF - 6-14
trial operation - 8-4
trial operation for servomotor without load - - - - - - - - - - - - - - - - 8-6
troubleshooting - 10-2
alarm - 10-7
malfunction without alarm display - - - - - - - - - - - - - - - - - - 10-17

U

UL standards - 1-10
installation conditions - 6-26
undershooting - 9-19
UP key - 7-3
using more than one SERVOPACK - 6-27

V

variable resistor for speed and torque setting - - - - - - - - - - - - - - 5-88
V-CMP - 6-15
VCT - 6-15
vibration class - 3-45
vibration reduction functions - 9-4
vibration resistance - 3-45
vibration/shock resistance - 4-5
VLT - 6-15
voltage regulation - 4-5
voltage resistance test - 4-8
V-REF - 6-14

W

WARN - 6-15
warning code output - 10-4
warning display - 10-4
warning display and troubleshooting - 10-16
warning display table when the application module is used - - - - - 10-6
warning output (/WARN) - 8-78
wiring
400-V power supply voltage - 6-30
absolute encoders - 6-9
DC power supply input - 6-7
incremental encoders - 6-8
wiring encoders - 6-8
wiring example - 6-20
wiring for noise control - 6-20
wiring main circuit power supply connector - - - - - - - - - - - - - - - - - 6-4
wiring precautions - 6-19

Z

zero clamp function - 8-43
zero-point search mode (Fn003) - 7-10

Revision History

The revision dates and numbers of the revised manuals are given on the bottom of the back cover.

MANUAL NO. SIEPS80000005B

© Printed in Japan October 2003 03-04 ◇1

Revision number

Date of printing

Date of original publication

Date of Printing	Rev. No.	Section	Revised Content
April 2003	–		First edition – Revised and combined the contents of the following manuals: • Σ-II Series SGM□H/SGDH USER'S MANUAL Servo Selection and Data Sheets (Manual No. SIE-S800-32.1) • Σ-II Series SGM□H/SGDH USER'S MANUAL Design and Maintenance (Manual No. SIE-S800-32.2)
October 2003	◇1	1.1.2	Revision: Nameplate of servomotors
		3.1.1, 3.2.1	Revision: Brake holding torque changed to motor rated torque
		3.11.3 (3), 3.11.4 (3), 3.11.5 (3)	Revision: Models
April 2004	◇2	2.1.3 (2)	Revision: Model of SGMGH servomotors (1500 min^{-1}, with gears)
		2.1.5 (2)	Revision: Model of SGMSH servomotors (3000 min^{-1}, with gears)
		2.1.6	Revision: Model of SGMDH servomotors (2000 min^{-1})
		3.14.2 (2)	Revision: Dimensional drawing of 200-V class SGMGH servomotors (1500 min^{-1}, without gears and with brakes, 5.5 to 15 kW)
		3.14.3	Revision: Dimensional drawing of 400-V class SGMGH servomotors (1500 min^{-1}, without gears and with brakes, 500 W to 15 kW)
		3.14.4 (1)	Revision: Dimensional drawing of SGMGH servomotors (1500 min^{-1}, with standard backlash gears and without brakes, foot-mounted type, grease lubricating type)
		3.14.5 (2)	Revision: Dimensional drawing of SGMGH servomotors (1500 min^{-1}, with standard backlash gears and without brakes, flange-mounted type, small oil lubricating type)
		3.15.3 (1)	Revision: Dimensional drawing of SGMGH servomotors (1000 min^{-1}, with standard backlash gears and without brakes, foot-mounted type, grease lubricating type)
		3.15.4 (1)	Revision: Dimensional drawing of SGMGH servomotors (1000 min^{-1}, with standard backlash gears and without brakes, flange-mounted type, grease lubricating type)
		3.15.4 (2)	Revision: Dimensional drawing of SGMGH servomotors (1000 min^{-1}, with standard backlash gears and without brakes, flange-mounted type, small oil lubricating type)
		3.17.1	Addition: Shaft-end dimensions of SGMDH servomotors (2000 min^{-1}, without gears and with/without brakes)
		3.19	Revision: Dimension line of shaft-end drawings
		6.4.2 (3)	Slightly revised
		8.4.6 (2)	Revision: Procedure 4
		Back cover	Revision: Address

Σ-Ⅱ Series SGM□H/SGDH

USER'S MANUAL

IRUMA BUSINESS CENTER□
480, Kamifujisawa, Iruma, Saitama 358-8555, Japan
Phone 81-4-2962-5696 Fax 81-4-2962-6138

YASKAWA ELECTRIC AMERICA, INC.□
2121 Norman Drive South, Waukegan, IL 60085, U.S.A.
Phone 1-847-887-7000 Fax 1-847-887-7370

MOTOMAN INC. HEADQUARTERS□
805 Liberty Lane West Carrollton, OH 45449, U.S.A.
Phone 1-937-847-6200 Fax 1-937-847-6277

YASKAWA ELÉTRICO DO BRASIL COMÉRCIO LTD.A.□
Avenida Fagundes Filho, 620 Bairro Saude-Sao Pãulo-SP, Brazil CEP: 04304-000
Phone 55-11-5071-2552 Fax 55-11-5581-8795

YASKAWA ELECTRIC EUROPE GmbH□
Am Kronberger Hang 2, 65824 Schwalbach, Germany
Phone 49-6196-569-300 Fax 49-6196-569-312

Motoman Robotics Europe AB□
Box 504 S38525 Torsås, Sweden
Phone 46-486-48800 Fax 46-486-41410

Motoman Robotec GmbH□
Kammerfeldstraβe 1, 85391 Allershausen, Germany
Phone 49-8166-90-100 Fax 49-8166-90-103

YASKAWA ELECTRIC UK LTD.□
1 Hunt Hill Orchardton Woods Cumbernauld, G68 9LF, United Kingdom
Phone 44-1236-735000 Fax 44-1236-458182

YASKAWA ELECTRIC KOREA CORPORATION□
Kfpa Bldg #1201, 35-4 Youido-dong, Yeongdungpo-Ku, Seoul 150-010, Korea
Phone 82-2-784-7844 Fax 82-2-784-8495

YASKAWA ELECTRIC (SINGAPORE) PTE. LTD.□
151 Lorong Chuan, #04-01, New Tech Park Singapore 556741, Singapore
Phone 65-6282-3003 Fax 65-6289-3003

YASKAWA ELECTRIC (SHANGHAI) CO., LTD.□
No.18 Xizang Zhong Road. Room 1805, Harbour Ring Plaza Shanghai 20000, China
Phone 86-21-5385-2200 Fax 86-21-5385-3299

YATEC ENGINEERING CORPORATION□
4F., No.49 Wu Kong 6 Rd, Wu-Ku Industrial Park, Taipei, Taiwan
Phone 886-2-2298-3676 Fax 886-2-2298-3677

YASKAWA ELECTRIC (HK) COMPANY LIMITED□
Rm. 2909-10, Hong Kong Plaza, 186-191 Connaught Road West, Hong Kong
Phone 852-2803-2385 Fax 852-2547-5773

BEIJING OFFICE□
Room No. 301 Office Building of Beijing International Club, 21
Jianguomenwai Avenue, Beijing 100020, China
Phone 86-10-6532-1850 Fax 86-10-6532-1851

TAIPEI OFFICE□
9F, 16, Nanking E. Rd., Sec. 3, Taipei, Taiwan
Phone 886-2-2502-5003 Fax 886-2-2505-1280

SHANGHAI YASKAWA-TONGJI M & E CO., LTD.□
27 Hui He Road Shanghai China 200437
Phone 86-21-6553-6060 Fax 86-21-5588-1190

BEIJING YASKAWA BEIKE AUTOMATION ENGINEERING CO., LTD.□
30 Xue Yuan Road, Haidian, Beijing P.R. China Post Code: 100083
Phone 86-10-6233-2782 Fax 86-10-6232-1536

SHOUGANG MOTOMAN ROBOT CO., LTD.□
7, Yongchang-North Street, Beijing Economic Technological Investment & Development Area,
Beijing 100076, P.R. China
Phone 86-10-6788-0551 Fax 86-10-6788-2878

YASKAWA ELECTRIC CORPORATION

YASKAWA

In the event that the end user of this product is to be the military and said product is to be employed in any weapons systems or the manufacture thereof, the export will fall under the relevant regulations as stipulated in the Foreign Exchange and Foreign Trade Regulations. Therefore, be sure to follow all procedures and submit all relevant documentation according to any and all rules, regulations and laws that may apply.

Specifications are subject to change without notice
for ongoing product modifications and improvements.

© 2003-2004 YASKAWA ELECTRIC CORPORATION. All rights reserved.

MANUAL NO. SIEPS80000005C

Printed in Japan April 2004 03-4 ②
04-1⑤ 97-23059, 97-23060, 97-71094