SINAMICS S110

Function Manual · 10/2008

SINAMICS

SIEMENS

SIEMENS

SINAMICS

S110
SINAMICS S110 Drive functions

Function Manual

Preface

General information for commissioning 1

Commissioning preparations for PROFIBUS 2

Commissioning with PROFIBUS 3

Commissioning with CANopen 4

Diagnostics 5

Parameterizing using the BOP20 (Basic Operator Panel 20) 6

Drive functions 7

Safety Integrated Functions 8

Communication PROFIBUS DP 9

Basic information about the drive system 10

Appendix 11

Valid for: Firmware version FW4.1

10/2008
6SL3097-4AB10-0BP0

Legal information

Warning notice system

This manual contains notices you have to observe in order to ensure your personal safety, as well as to prevent damage to property. The notices referring to your personal safety are highlighted in the manual by a safety alert symbol, notices referring only to property damage have no safety alert symbol. These notices shown below are graded according to the degree of danger.

⚠DANGER
indicates that death or severe personal injury **will** result if proper precautions are not taken.

⚠WARNING
indicates that death or severe personal injury **may** result if proper precautions are not taken.

⚠CAUTION
with a safety alert symbol, indicates that minor personal injury can result if proper precautions are not taken.

CAUTION
without a safety alert symbol, indicates that property damage can result if proper precautions are not taken.

NOTICE
indicates that an unintended result or situation can occur if the corresponding information is not taken into account.

If more than one degree of danger is present, the warning notice representing the highest degree of danger will be used. A notice warning of injury to persons with a safety alert symbol may also include a warning relating to property damage.

Qualified Personnel

The device/system may only be set up and used in conjunction with this documentation. Commissioning and operation of a device/system may only be performed by **qualified personnel**. Within the context of the safety notes in this documentation qualified persons are defined as persons who are authorized to commission, ground and label devices, systems and circuits in accordance with established safety practices and standards.

Proper use of Siemens products

Note the following:

⚠WARNING
Siemens products may only be used for the applications described in the catalog and in the relevant technical documentation. If products and components from other manufacturers are used, these must be recommended or approved by Siemens. Proper transport, storage, installation, assembly, commissioning, operation and maintenance are required to ensure that the products operate safely and without any problems. The permissible ambient conditions must be adhered to. The information in the relevant documentation must be observed.

Trademarks

All names identified by ® are registered trademarks of the Siemens AG. The remaining trademarks in this publication may be trademarks whose use by third parties for their own purposes could violate the rights of the owner.

Disclaimer of Liability

We have reviewed the contents of this publication to ensure consistency with the hardware and software described. Since variance cannot be precluded entirely, we cannot guarantee full consistency. However, the information in this publication is reviewed regularly and any necessary corrections are included in subsequent editions.

Siemens AG
Industry Sector
Postfach 48 48
90026 NÜRNBERG
GERMANY

Ordernumber: 6SL3097-4AB10-0BP0
Ⓟ 12/2008

Copyright © Siemens AG 2008.
Technical data subject to change

Preface

Foreword

SINAMICS Documentation

The SINAMICS documentation is organized in 2 parts:

- General documentation / catalogs
- Manufacturer/service documentation

At http://www.siemens.com/motioncontrol/docu information is available on the following topics:

- Ordering documentation

  Here you will find the current overview of publications
- Downloading documentation

  Links to more information for downloading files from Service & Support
- Researching documentation online

  Information on DOConCD and direct access to the publications in DOConWeb.
- Individually compiling documentation on the basis of Siemens contents with the My Documentation Manager (MDM), refer to

  http://www.siemens.com/mdm

The My Documentation Manager offers you a number of features for compiling your own machine documenation

- Training and FAQs

Information on the range of training courses and FAQs (frequently asked questions) are available via the page navigation.

Usage phases and the available tools/documents

Table 1 Usage phase and the available tools / documents

Usage phase	Tools/documents
Orientation	SINAMICS S Sales Documentation
Planning/configuration	SIZER engineering tool Configuration Manuals, Motors
Decision making / ordering	SINAMICS S Catalogs
Installation / assembly	• SINAMICS S110 Equipment Manual
Commissioning	• STARTER parameterization and commissioning tool • SINAMICS S110 Getting Started • SINAMICS S110 Function Manual Drive Functions • SINAMICS S110 List Manual
Usage / operation	• SINAMICS S110 Function Manual Drive Functions • SINAMICS S110 List Manual
Maintenance/servicing	• SINAMICS S110 Function Manual Drive Functions • SINAMICS S110 List Manual

Target group

This documentation is aimed at machine manufacturers, commissioning engineers, and service personnel who use SINAMICS.

Benefits

This documentation contains the comprehensive information about parameters, function diagrams and faults and alarms required to commission and service the system.

This manual should be used in addition to the other manuals and tools provided for the product.

Standard scope

The scope of the functionality described in this document can differ from the scope of the functionality of the drive system that is actually supplied.

- Other functions not described in this documentation might be able to be executed in the drive system. This does not, however, represent an obligation to supply such functions with a new control or when servicing.
- Functions can be described in the documentation that are not available in a particular product version of the drive system. The functionality of the supplied drive system should only be taken from the ordering documentation.
- Extensions or changes made by the machine manufacturer must be documented by the machine manufacturer.

For reasons of clarity, this documentation does not contain all of the detailed information on all of the product types. This documentation cannot take into consideration every conceivable type of installation, operation and service/maintenance.

Search tools

The following guides are provided to help you locate information in this manual:

1. General table of contents for the complete manual (after the preface).
2. List of abbreviations
3. References.
4. Index

Technical Support

If you have any questions, please contact our hotline:

	Europe/Africa
Telephone	+49 180 5050 - 222
Fax	+49 180 5050 - 223
0.14 €/min. from German landlines, mobile phone prices may differ)	
Internet	http://www.siemens.de/automation/support-request

	America
Telephone	+1 423 262 2522
Fax	+1 423 262 2200
E-mail	mailto:techsupport.sea@siemens.com

	Asia/Pacific
Telephone	+86 1064 757575
Fax	+86 1064 747474
E-mail	mailto:support.asia.automation@siemens.com

Note

You will find telephone numbers for other countries for technical support in the Internet:
http://www.automation.siemens.com/partner

Spare parts

You can find spare parts on the Internet at:
http://support.automation.siemens.com/WW/view/de/16612315

Questions about the documentation

If you have any questions (suggestions, corrections) regarding this technical documentation, please fax or e-mail us at:

Fax	+49 9131 98 2176
E-mail	mailto:docu.motioncontrol@siemens.com

A fax form is at the end of this document.

Internet address for SINAMICS

http://www.siemens.com/sinamics.

EC Declarations of Conformity

The EC Declaration of Conformity for the EMC Directive can be found/obtained:

- in the Internet:
  http://support.automation.siemens.com
  under the Product/Order No. 15257461
- at the responsible regional office of the I DT MC Business Unit of Siemens AG

The EC Declaration of Conformity for the Low-Voltage Directive can be found/obtained

- in the Internet:
  http://support.automation.siemens.com
  under the Product/Order No. 22383669

Note

When operated in dry areas, SINAMICS S devices conform to the Low Voltage Directive 73/23/EEC or 2006/95/EEC.

Note

SINAMICS S devices fulfill EMC Directive 89/336/EEC or 2004/108/EEC in the configuration specified in the associated EC Declaration of Conformity and when the EMC installation guideline is implemented, Order No. 6FC5297-0AD30-0□P□.

Note

The Equipment Manual describes a desired state which, if maintained, ensures reliable operation as desired and compliance with EMC limit values.

Should there be a deviation from the Manual requirements, appropriate actions (e.g. measurements) must be taken to check/prove that the desired reliable operation is ensured and EMC limit values are complied with.

ESD information

⚠ CAUTION

Electrostatic sensitive devices (ESD) are single components, integrated circuits or devices that can be damaged by electrostatic fields or electrostatic discharges.

Regulations for handling ESD components:

When handling components, make sure that personnel, workplaces, and packaging are well earthed.

Personnel may only come into contact with electronic components, if

- They are grounded with an ESD wrist band, or
- They are in ESD areas with conductive flooring, ESD shoes or ESD grounding straps.

Electronic boards should only be touched if absolutely necessary. They must only be handled on the front panel or, in the case of printed circuit boards, at the edge.

Electronic boards must not come into contact with plastics or items of clothing containing synthetic fibers.

Boards must only be placed on conductive surfaces (work surfaces with ESD surface, conductive ESD foam, ESD packing bag, ESD transport container).

Do not place boards near display units, monitors, or television sets (minimum distance from screen: 10 cm).

Measurements must only be taken on boards when the measuring instrument is grounded (via protective conductors, for example) or the measuring probe is briefly discharged before measurements are taken with an isolated measuring device (for example, touching a bare metal housing).

Safety information

⚠ DANGER

Commissioning must not start until you have ensured that the machine, in which the components described here are installed, complies with the Machinery Directive 98/37/EC.

Only appropriately qualified personnel may mount/install, commission and service the SINAMICS S units.

The personnel must take into account the information provided in the technical customer documentation for the product, and be familiar with and observe the specified danger and warning notices.

Operational electrical equipment and motors have parts and components which are at hazardous voltage levels, that if touched, can result in severe bodily injury or death.

All work on the electrical system must be carried out when the system has been disconnected from the power supply.

In combination with the drive system, the motors are generally approved for operation on TN and TT systems with grounded neutral and on IT systems.

In operation on IT systems, the occurrence of a first fault between an active part and ground must be signaled by a monitoring device. In accordance with IEC 60364-4-41 it is recommended that the first fault should be eliminated as quickly as practically possible.

In networks with a grounded external conductor, an isolating transformer with grounded neutral (secondary side) must be connected between the supply and the drive system to protect the motor insulation from excessive stress. The majority of TT systems have a grounded external conductor, so in this case an isolating transformer must be used.

⚠ DANGER

Correct and safe operation of SINAMICS S drive units assumes correct transportation in the transportation packaging, correct long-term storage in the transport packaging, setup and installation, as well as careful operation and maintenance.

The details in the Catalogs and proposals also apply to the design of special equipment versions.

In addition to the danger and warning information provided in the technical customer documentation, the applicable national, local, and system-specific regulations and requirements must be taken into account.

To ensure compliance with EN 61800-5-1 and UL 508, only safety extra-low voltages from the electronics modules may be connected to connections and terminals.

⚠ DANGER

Using protection against direct contact via DVC A (PELV) is only permissible in areas with equipotential bonding and in dry rooms indoors. If these conditions are not fulfilled, then other protective measures against electric shock must be used (e.g. protection using protective impedances or limited voltage or using protective classes I and II).

⚠ DANGER

Electrical, magnetic and electromagnetic fields (EMF) that occur during operation can pose a danger to persons who are present in the direct vicinity of the product - especially persons with pacemakers, implants, or similar devices.

The relevant directives and standards must be observed by the machine/plant operators and persons present in the vicinity of the product. These are, for example, EMF Directive 2004/40/EEC and standards EN 12198-1 and -3 pertinent to the European Economic Area (EEA), as well as accident prevention code BGV 11 and the associated rule BGR 11 "Electromagnetic fields" of the German employer's liability accident insurance association.

These state that a hazard analysis must drawn up for every workplace, from which measures for reducing dangers and their impact on persons are derived and applied, and exposure and danger zones are defined and observed.

The relevant safety notes in each chapter must be observed.

⚠ DANGER

As part of routine tests, SINAMICS S components will undergo a voltage test in accordance with EN 61800-5-1. Before the voltage test is performed on the electrical equipment of machines acc. to EN 60204-1, Section 19.4, all connectors of SINAMICS S equipment must be disconnected/unplugged to prevent the equipment from being damaged.

Motors should be connected up in accordance with the circuit diagram supplied with the motor (refer to the connection examples for Power Modules). They must not be connected directly to the three-phase supply because this will damage them.

⚠ WARNING

Operating the equipment in the immediate vicinity (< 1.8 m) of mobile telephones with a transmitter power of > 1 W may cause the equipment to malfunction.

Explanation of symbols

The symbols are in accordance with IEC 617-2.

Table 2 Symbols

Symbol	Meaning
	Protective earth (PE)
	Ground (e.g. M 24 V)
	Functional ground Equipotential bonding

Table of contents

Preface 5

1 General information for commissioning 21

1.1 The STARTER user interface 21

1.2 BICO interconnection procedure in STARTER 22

1.3 Notes on the commissioning of a 2-pole resolver as absolute encoder 32

1.4 Temperature sensors for SINAMICS components 33

2 Commissioning preparations for PROFIBUS 37

2.1 Requirements for commissioning 37

2.2 PROFIBUS components 40

2.3 Connection via serial interface 41

2.4 DRIVE-CLiQ interface for CU305 42

2.5 Powering-up/powering-down the drive system 43

3 Commissioning with PROFIBUS 47

3.1 Sequence of operations during commissioning 47
3.1.1 Safety guidelines 47

3.2 STARTER commissioning tool 48
3.2.1 Important STARTER functions 48
3.2.2 Activating online operation: STARTER via PROFIBUS 51

3.3 Basic Operator Panel 20 (BOP20) 52
3.3.1 Important functions via BOP20 53

3.4 Creating a project in STARTER 54
3.4.1 Creating a project offline 54
3.4.2 Searching for a drive unit online 56
3.4.3 Searching for nodes that can be accessed 58

3.5 Example of first commissioning with STARTER 58
3.5.1 Task 59
3.5.2 Commissioning with Starter (example) 60

3.6 Initial commissioning: Servo AC DRIVE with BOP20 as an example 61
3.6.1 Task 61
3.6.2 Component wiring (example) 62
3.6.3 Quick commissioning using the BOP (example) 63

4 Commissioning with CANopen 65

4.1 Requirements for commissioning 65
4.1.1 Pre-requisites for commissioning the CANopen interface 65
4.1.2 Previous knowledge 65
4.1.3 Prerequisites for commissioning CU305 with CANopen 66
4.1.4 CAN bus on the CU305 67
4.1.5 CAN bus interface X126 68
4.1.6 CANopen functionality CU305 CAN 69
4.1.7 Diagnostics LED "COM" 70

4.2 Commissioning 70
4.2.1 Procedure when commissioning the drive for the first time 70
4.2.2 CANopen object directory 71
4.2.3 Commissioning options 72
4.2.4 Configuring the drive unit with STARTER (overview) 73
4.2.5 Searching for the drive unit ONLINE 74
4.2.6 Configuring a drive unit 75
4.2.7 CAN settings 81
4.2.7.1 Monitoring 81
4.2.8 Loading the project to the drive unit 82

4.3 Configuring COB-IDs and process data objects 83
4.3.1 Configuring COB-IDs and process data 83

4.4 Interconnecting process data 83
4.4.1 Interconnecting process data 83

4.5 Loading and managing projects ONLINE 84
4.5.1 Load the projects from the drive unit to the PC/PG in ONLINE mode and save them 84

5 Diagnostics 85

5.1 Diagnostics via LEDs 85
5.1.1 LEDs when the Control Unit is booted 85
5.1.2 LEDs after the Control Unit CU305 has booted 86
5.1.3 Sensor Module Cabinet SMC10 / SMC20 88
5.1.4 SMC30 Sensor Module Cabinet 89

5.2 Diagnostics via STARTER 90
5.2.1 Function generator 90
5.2.2 Trace function 94
5.2.3 Measuring function 96
5.2.4 Measuring sockets 98

5.3 Fault and alarm messages 102
5.3.1 General information about faults and alarms 102
5.3.2 Buffer for faults and alarms 103
5.3.3 Configuring messages 106
5.3.4 Parameters and function diagrams for faults and alarms 108
5.3.5 Forwarding of faults and alarms 109

6 Parameterizing using the BOP20 111

6.1 General information about the BOP20 111

6.2 Displays and using the BOP20 113

6.3 Fault and alarm displays 117

6.4 Controlling the drive using the BOP20 118

7 Drive functions 119

7.1 Servo control 119
7.1.1 Speed controller 119
7.1.2 Speed setpoint filter 120
7.1.3 Speed controller adaptation 121
7.1.4 Torque-controlled operation 123
7.1.5 Torque setpoint limitation 126
7.1.6 Current controller 130
7.1.7 Current setpoint filter 132
7.1.7.1 Description 132
7.1.7.2 Integration 138
7.1.8 Note about the electronic motor model 138
7.1.9 V/f control for diagnostics 139
7.1.10 Optimizing the current and speed controller 142
7.1.11 Sensorless operation (without an encoder) 143
7.1.12 Motor data identification 147
7.1.12.1 Motor data identification 147
7.1.12.2 Motor data identification - induction motor 150
7.1.12.3 Motor data identification - synchronous motor 152
7.1.13 Pole position identification 155
7.1.14 Vdc control 159
7.1.15 Dynamic Servo Control (DSC) 162
7.1.16 Travel to fixed stop 165
7.1.17 Vertical axes 170
7.1.18 Variable signaling function 171

7.2 Basic functions 173
7.2.1 Changing over units 173
7.2.2 Reference parameters/normalizations 175
7.2.3 Automatic restart 177
7.2.4 Armature short-circuit brake, DC brake 179
7.2.5 OFF3 torque limits 183
7.2.6 Simple brake control 184
7.2.6.1 Description 184
7.2.7 Runtime (operating hours counter) 186
7.2.8 Parking axis and parking encoder 187
7.2.8.1 Description 187
7.2.8.2 Example: parking axis and parking sensor 189
7.2.9 Updating the firmware 190
7.2.9.1 Upgrading firmware and the project in STARTER 190
7.2.10 Changing the direction of rotation without changing the setpoint 192

7.3 Function modules 193
7.3.1 Function modules - Definition and commissioning 193
7.3.2 Technology controller 194
7.3.2.1 Features 194
7.3.2.2 Description 194
7.3.2.3 Integration 197
7.3.2.4 Commissioning with STARTER 198
7.3.3 Extended monitoring functions 199
7.3.3.1 Description 199
7.3.3.2 Integration 200
7.3.3.3 Commissioning 201
7.3.4 Extended brake control 202
7.3.4.1 Features 202
7.3.4.2 Integration 202

7.3.4.3 Description ... 204
7.3.4.4 Examples ... 204
7.3.4.5 Commissioning ... 206
7.3.5 Closed-loop position control ... 207
7.3.5.1 General features ... 207
7.3.5.2 Position actual value conditioning ... 207
7.3.5.3 Position controller ... 216
7.3.5.4 Monitoring functions ... 217
7.3.5.5 Measuring probe evaluation and reference mark search ... 220
7.3.5.6 Integration ... 221
7.3.6 Basic Positioner ... 222
7.3.6.1 Mechanical system ... 224
7.3.6.2 Limits ... 226
7.3.6.3 Referencing ... 231
7.3.6.4 Traversing blocks ... 238
7.3.6.5 Travel to fixed stop ... 244
7.3.6.6 Direct setpoint input (MDI) ... 247
7.3.6.7 Jog ... 250
7.3.6.8 Status signals ... 251
7.3.7 Extended setpoint channel ... 253
7.3.7.1 Activation of the "extended setpoint channel" function module ... 253
7.3.7.2 Description ... 254
7.3.7.3 Jog ... 255
7.3.7.4 Fixed speed setpoints ... 259
7.3.7.5 Motorized potentiometer ... 260
7.3.7.6 Main/supplementary setpoint and setpoint modification ... 262
7.3.7.7 Direction limitation and setpoint inversion ... 263
7.3.7.8 Suppression bandwidths and setpoint limits ... 264
7.3.7.9 Ramp-function generator ... 266

8 Safety Integrated Functions ... 271

8.1 Standards and regulations ... 271
8.1.1 General information ... 271
8.1.1.1 Aims ... 271
8.1.1.2 Functional safety ... 272
8.1.2 Safety of machinery in Europe ... 272
8.1.2.1 Machinery Directive (98/37/EC) ... 273
8.1.2.2 Harmonized European Standards ... 273
8.1.2.3 Standards for implementing safety-related controllers ... 275
8.1.2.4 EN ISO 13849-1 (previously EN 954-1) ... 277
8.1.2.5 EN 62061 ... 278
8.1.2.6 Series of standards EN 61508 (VDE 0803) ... 280
8.1.2.7 Risk analysis/assessment ... 280
8.1.2.8 Risk reduction ... 282
8.1.2.9 Residual risk ... 282
8.1.3 Machine safety in the USA ... 282
8.1.3.1 Minimum requirements of the OSHA ... 283
8.1.3.2 NRTL listing ... 283
8.1.3.3 NFPA 79 ... 284
8.1.3.4 ANSI B11 ... 284
8.1.4 Machine safety in Japan ... 285
8.1.5 Equipment regulations ... 285
8.1.6 Other safety-related issues ... 286
8.1.6.1 Information sheets issued by the Employer's Liability Insurance Association ... 286
8.1.6.2 Additional references ... 286

8.2 General information about SINAMICS Safety Integrated 287
8.2.1 Supported functions 287
8.2.2 Parameter, Checksum, Version, Password 288

8.3 System features 291
8.3.1 Certification 291
8.3.2 Safety instructions 291
8.3.3 Probability of failure of the safety functions (PFH value) 294
8.3.4 Response times 295
8.3.5 Residual risk 296

8.4 Basic Functions 298
8.4.1 Safe Torque Off (STO) 298
8.4.2 Safe Stop 1 (SS1, time controlled) 301
8.4.3 Safe Brake Control (SBC) 302
8.4.4 Safety faults 304
8.4.5 Forced checking procedure 306

8.5 Extended Functions 307
8.5.1 Safe Stop 1 (SS1, time and acceleration controlled) 307
8.5.2 Safe Stop 2 (SS2) 310
8.5.3 Safe Operating Stop (SOS) 312
8.5.4 Safely Limited Speed (SLS) 313
8.5.5 Safe Speed Monitor (SSM) 316
8.5.6 Safe Acceleration Monitor (SBR) 318
8.5.7 Safety faults 320
8.5.8 Message buffer 324
8.5.9 Safe actual value acquisition 326
8.5.10 Forced dormant error detection 329

8.6 Controlling the safety functions 331
8.6.1 Overview of F-DI/F-DOs and of their structure 331
8.6.2 Control of the Basic Functions via a safe input terminal pair 332
8.6.2.1 Control via terminals on the Control Unit and the power unit 332
8.6.3 Control of the Safety Integrated Extended Functions using safe input terminals 332
8.6.4 Overview of the F-DOs 337
8.6.5 Control by way of PROFIsafe 339

8.7 Commissioning 342
8.7.1 Safety Integrated firmware versions 342
8.7.2 General commissioning information 343
8.7.2.1 Introduction 343
8.7.2.2 Setting the sampling times 344
8.7.3 Commissioning the safety terminals by means of STARTER/SCOUT 345
8.7.3.1 Basic sequence of commissioning 345
8.7.3.2 Configuration start screen 346
8.7.3.3 Configuration of the safety terminals 347
8.7.3.4 F-DI/F-DO configuration 348
8.7.3.5 Control interface 350
8.7.4 Commissioning PROFIsafe via PROFIBUS 351
8.7.5 Information pertaining to component replacements 355
8.7.6 Information pertaining to series commissioning 355

8.8 Application examples 356
8.8.1 Input/output interconnections for a safety switching device with CU305 356
8.8.2 Interconnection of F-DO with redundant contactors with positively driven auxiliary contacts 358

8.9 Acceptance test and acceptance report ... 359
8.9.1 General information ... 359
8.9.2 Safety logbook ... 364
8.9.3 Acceptance report ... 365
8.9.3.1 Plant description - Documentation part 1 ... 365
8.9.3.2 Description of safety functions - Documentation Part 2 ... 366
8.9.4 Acceptance tests ... 368
8.9.4.1 Acceptance test for Safe Torque Off (STO) ... 368
8.9.4.2 Acceptance test for Safe Stop 1, time controlled (SS1) ... 370
8.9.4.3 Acceptance test for "Safe Brake Control" (SBC) ... 371
8.9.4.4 Acceptance test for Safe Stop 1, time and acceleration controlled ... 373
8.9.4.5 Acceptance test for Safe Stop 2 (SS2) ... 375
8.9.4.6 Acceptance test for Safe Operating Stop (SOS) ... 377
8.9.4.7 Acceptance test for Safely Limited Speed (SLS) ... 379
8.9.4.8 Acceptance test for Safe Speed Monitor (SSM) ... 380
8.9.5 Completion of certificate ... 382

9 Communication PROFIBUS DP ... 383

9.1 Communication according to PROFIdrive ... 383
9.1.1 General information about PROFIdrive for SINAMICS ... 383
9.1.2 Application classes ... 384
9.1.3 Cyclic communication ... 388
9.1.3.1 Telegrams and process data ... 388
9.1.3.2 Description of control words and setpoints ... 392
9.1.3.3 Description of status words and actual values ... 404
9.1.3.4 Control and status words for encoder ... 417
9.1.3.5 Example 2: Flying measurement ... 421
9.1.3.6 Central control and status words ... 428
9.1.3.7 Motion Control with PROFIdrive ... 434
9.1.4 Acyclic communication ... 437
9.1.4.1 General information about acyclic communication ... 437
9.1.4.2 Structure of orders and responses ... 439
9.1.4.3 Determining the drive object numbers ... 444
9.1.4.4 Example 1: read parameters ... 445
9.1.4.5 Example 2: write parameters (multi-parameter request) ... 447

9.2 Communication via PROFIBUS DP ... 450
9.2.1 General information about PROFIBUS ... 450
9.2.1.1 General information about PROFIBUS for SINAMICS ... 450
9.2.2 Commissioning PROFIBUS ... 452
9.2.2.1 General information about commissioning ... 452
9.2.2.2 Commissioning procedure ... 455
9.2.2.3 Diagnostics options ... 455
9.2.2.4 SIMATIC HMI addressing ... 455
9.2.2.5 Monitoring: telegram failure ... 457
9.2.3 Motion Control with PROFIBUS ... 458

10 Basic information about the drive system 463

10.1 Parameter 463

10.2 Data sets 466
10.2.1 CDS: Command Data Set 466
10.2.2 DDS: Drive Data Set 467
10.2.3 EDS: Encoder Data Set 468
10.2.4 MDS: Motor Data Set 468
10.2.5 Integration 469
10.2.6 Using data sets 470

10.3 Working with the memory card 472
10.3.1 Functions of the memory card 472

10.4 BICO technology: Interconnecting signals 475
10.4.1 Description 475
10.4.2 Binectors, connectors 476
10.4.3 Interconnecting signals using BICO technology 477
10.4.4 Internal encoding of the binector/connector output parameters 478
10.4.5 Sample interconnections 478
10.4.6 BICO technology: 479
10.4.7 Scaling 480

10.5 Inputs/outputs 481
10.5.1 Overview of inputs/outputs 481
10.5.2 Digital inputs/outputs 482
10.5.3 Analog Input 485

10.6 System sampling times 486

10.7 Licensing 487

11 Appendix 491

11.1 List of abbreviations 491

Index 505

General information for commissioning 1

1.1 The STARTER user interface

You can use STARTER to create the sample project. The different areas of the user interface are used for different configuration tasks (refer to diagram below):

- Project navigator (area ①): this area displays the elements and objects that can be added to your project.
- Working area (area ②): you create the project in this area:
  - When you are configuring the drive, this area contains the Wizards that help you configure the drive objects.
  - You can configure the parameters for the speed setpoint filter, for example.
  - When you call up the expert list, the system displays a list of all the parameters that you can view or change.
- Detail view (area ③): this area contains detailed information on faults and alarms, for example.

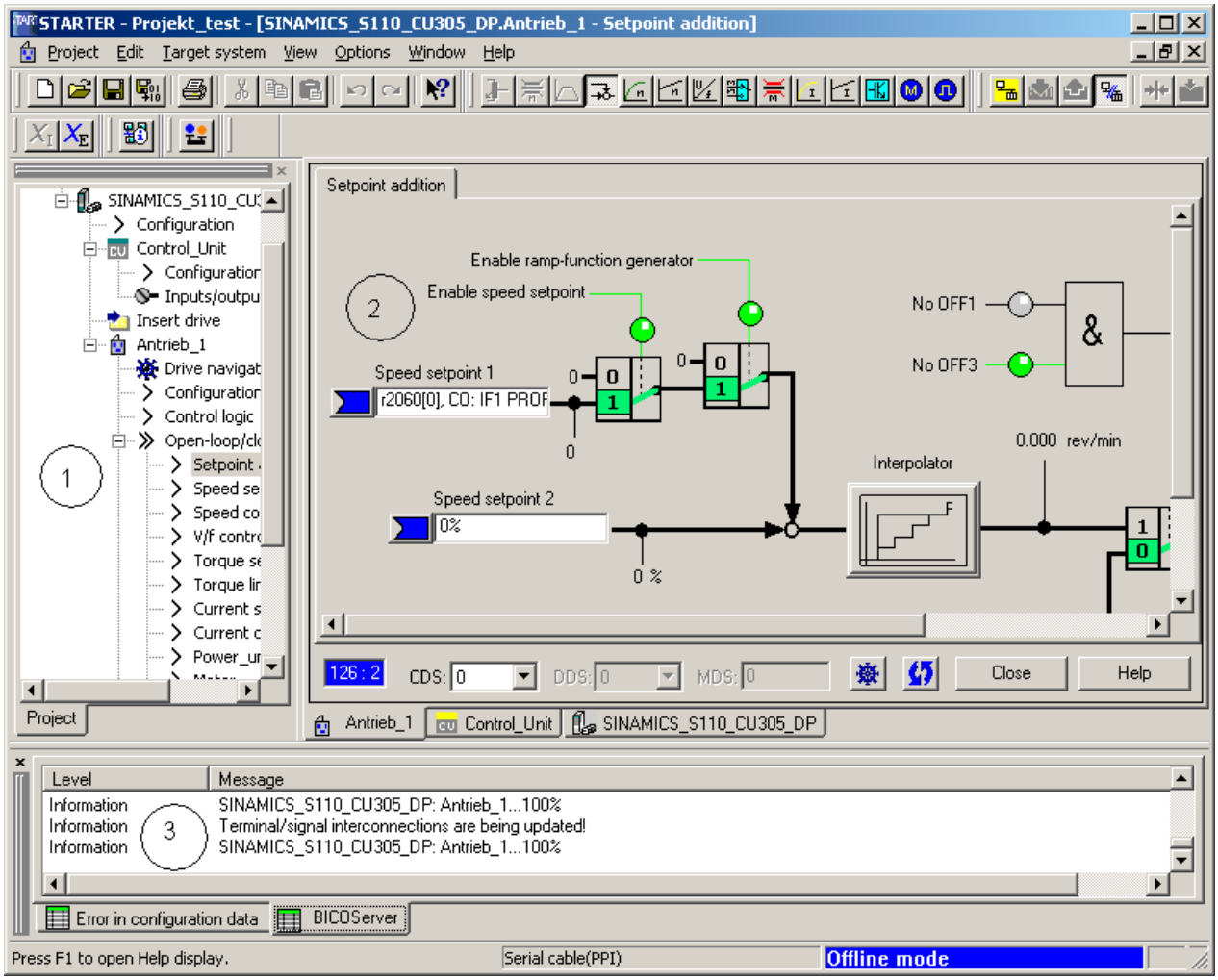

Figure 1-1 The different areas of the STARTER user interface

1.2 BICO interconnection procedure in STARTER

Introduction

Parameterization can be carried out via the following means:

- Expert list
- Graphical screen interface

The steps described below explain the BICO interconnection procedure in STARTER.

Expert list

When carrying out BICO interconnection via the expert list, proceed as follows:

You want to interconnect parameter **p0840** of the control word with r parameter **r2090[0]**, for example.

1. In the project navigator, call up the expert list as follows: **Drive_1 > right-click > Expert > Expert list**.
2. Search for parameter **p0840**.

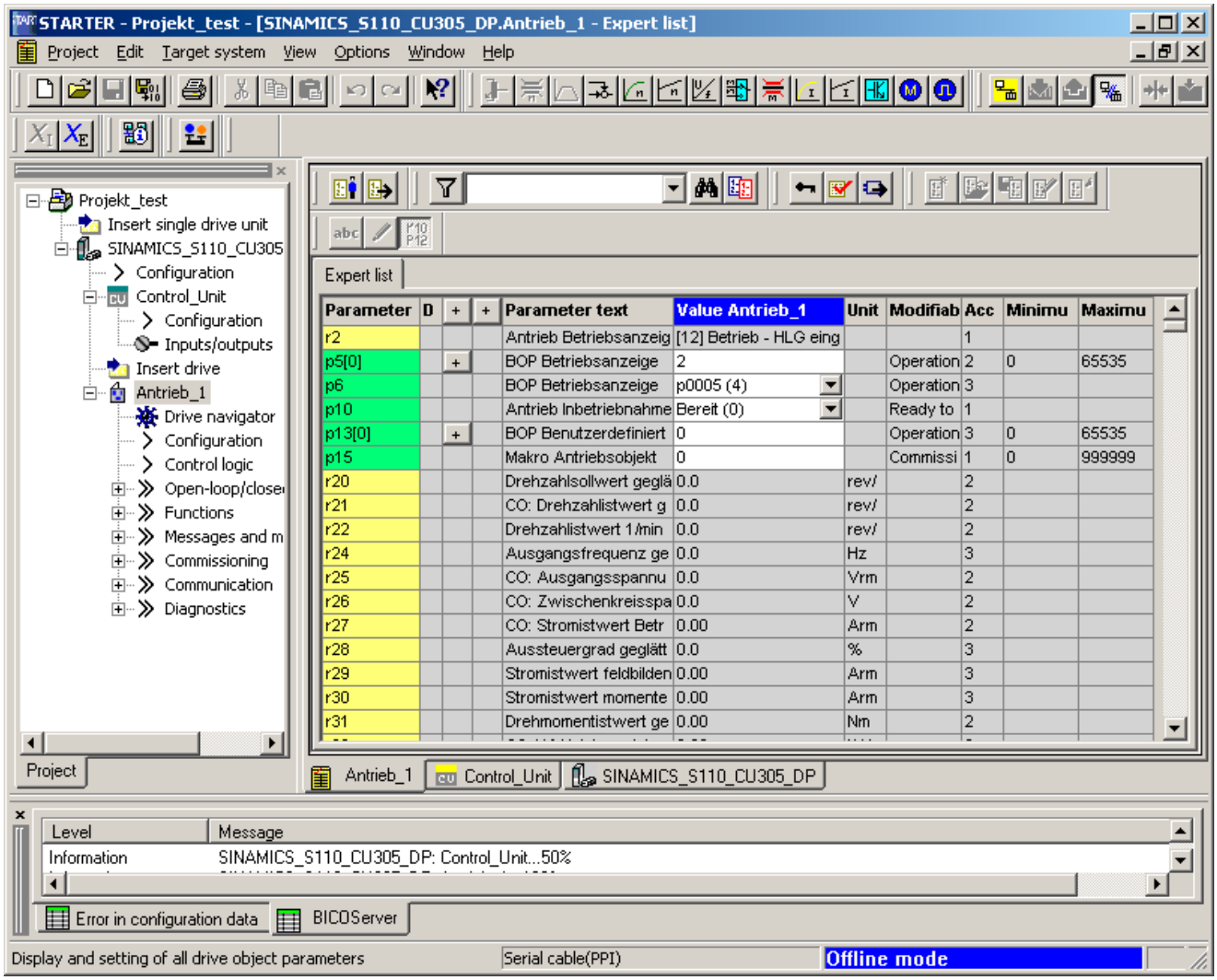

Figure 1-2 Interconnect 1

3. Click the pushbutton to interconnect with an r parameter.
4. A list from which you can select the available r parameters is now displayed.

5. Search for parameter **p2090**.

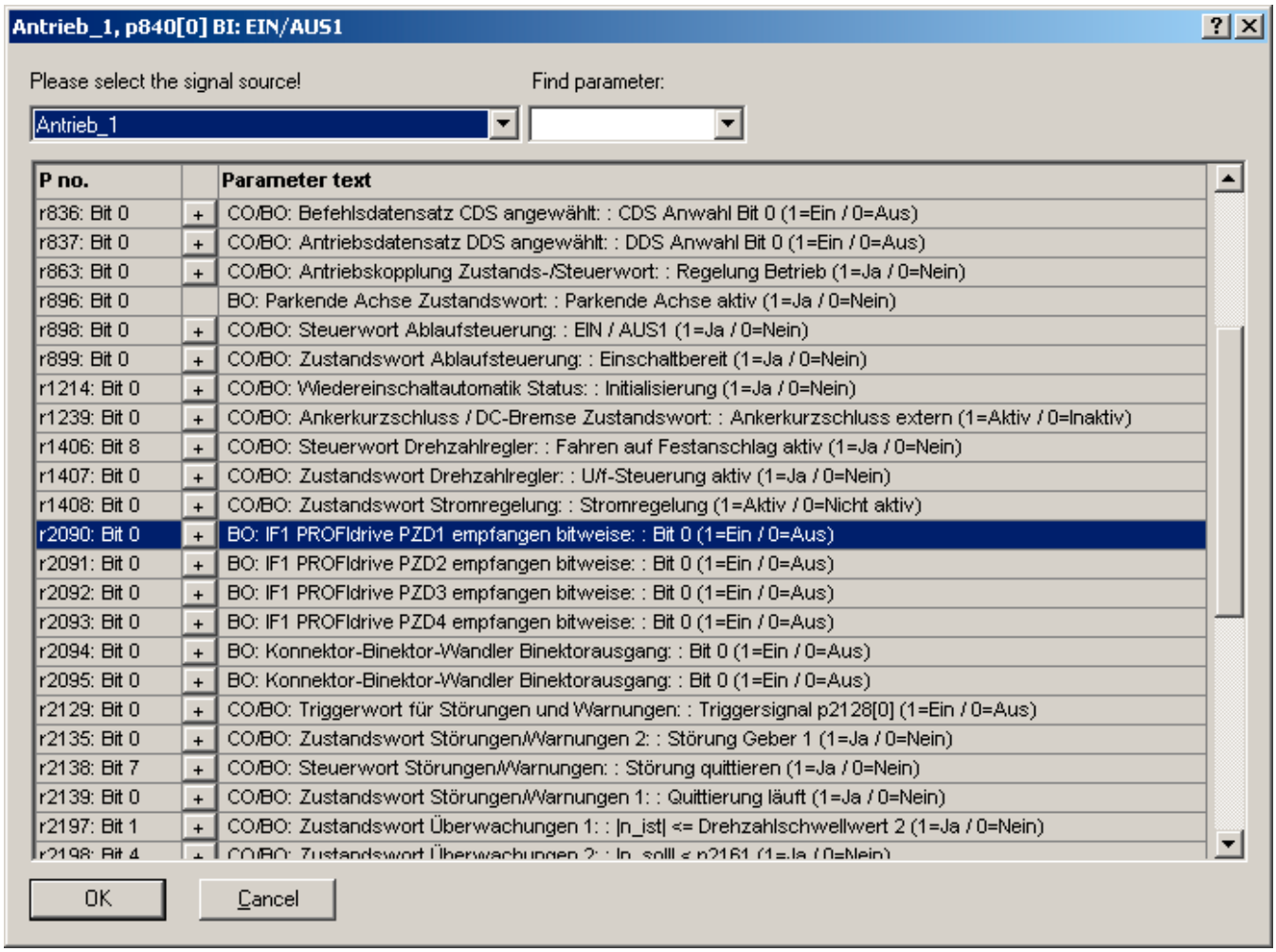

Figure 1-3 Interconnect 2

6. Click the "+" sign to open the 16 bits of r parameter **r2090**.

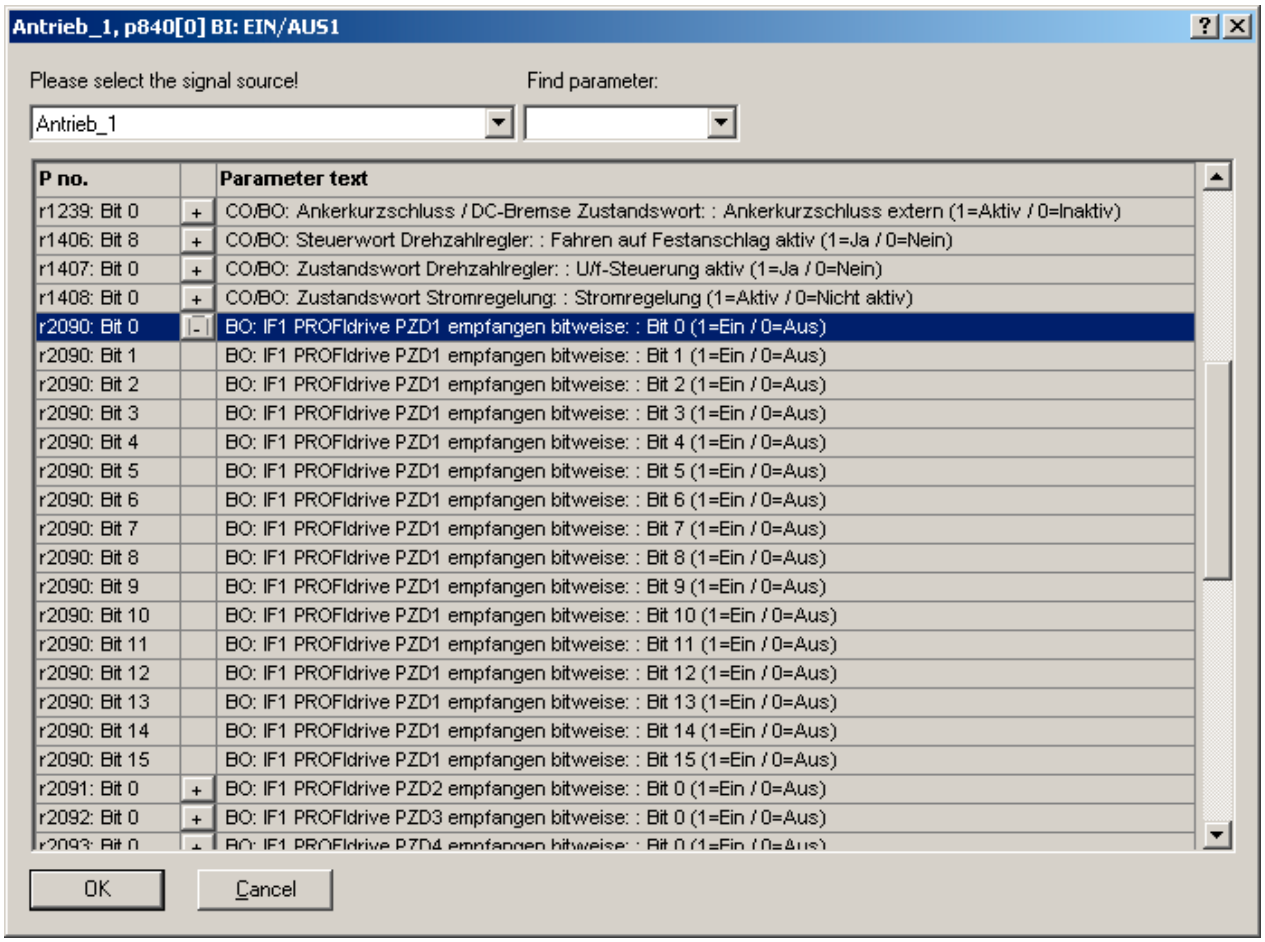

Figure 1-4 Interconnect 3

7. Double-click **r2090: Bit0.**

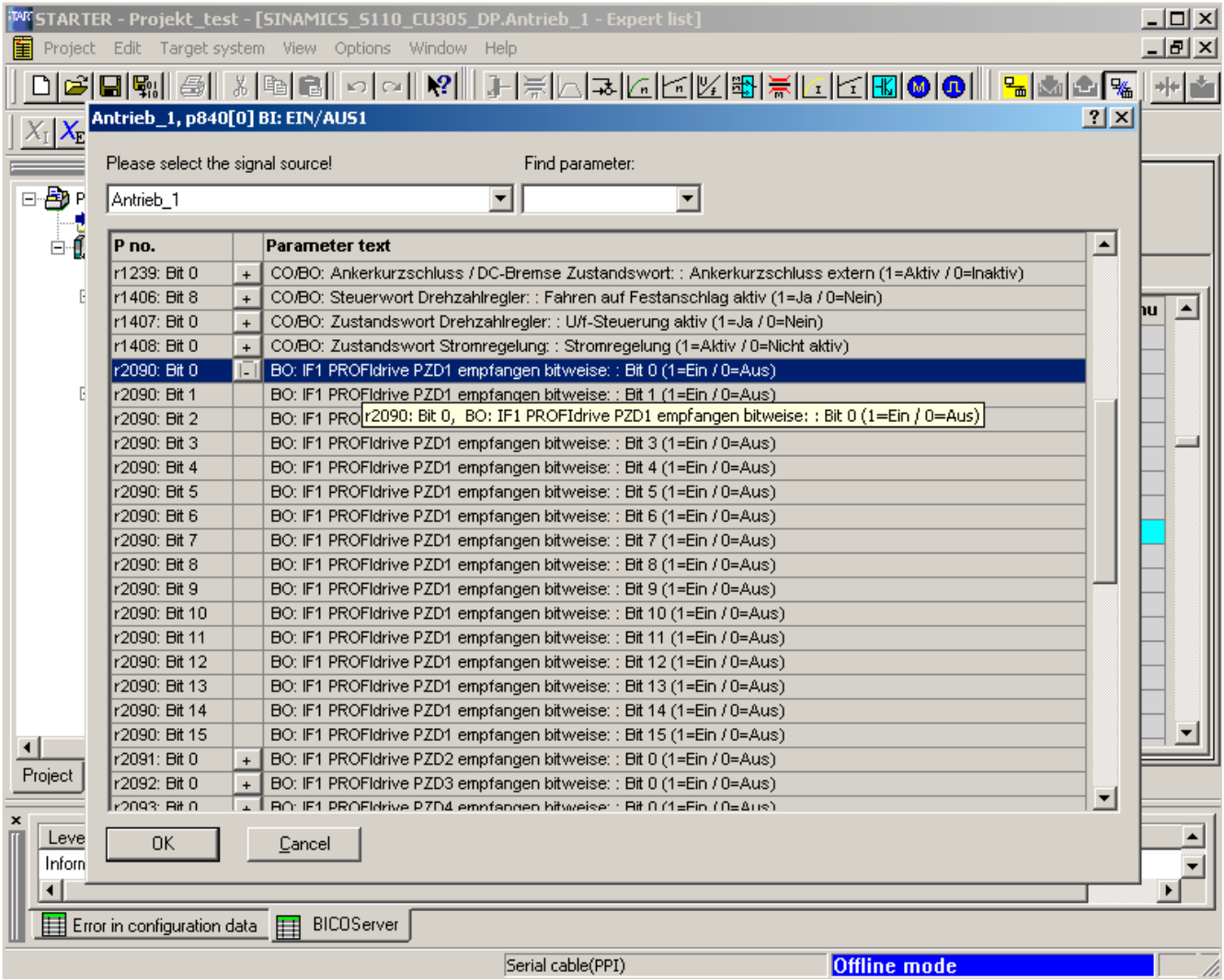

Figure 1-5 Interconnect 4

8. In the expert list, you can now see that **p0840** has been interconnected with r parameter **r2090[0]**.

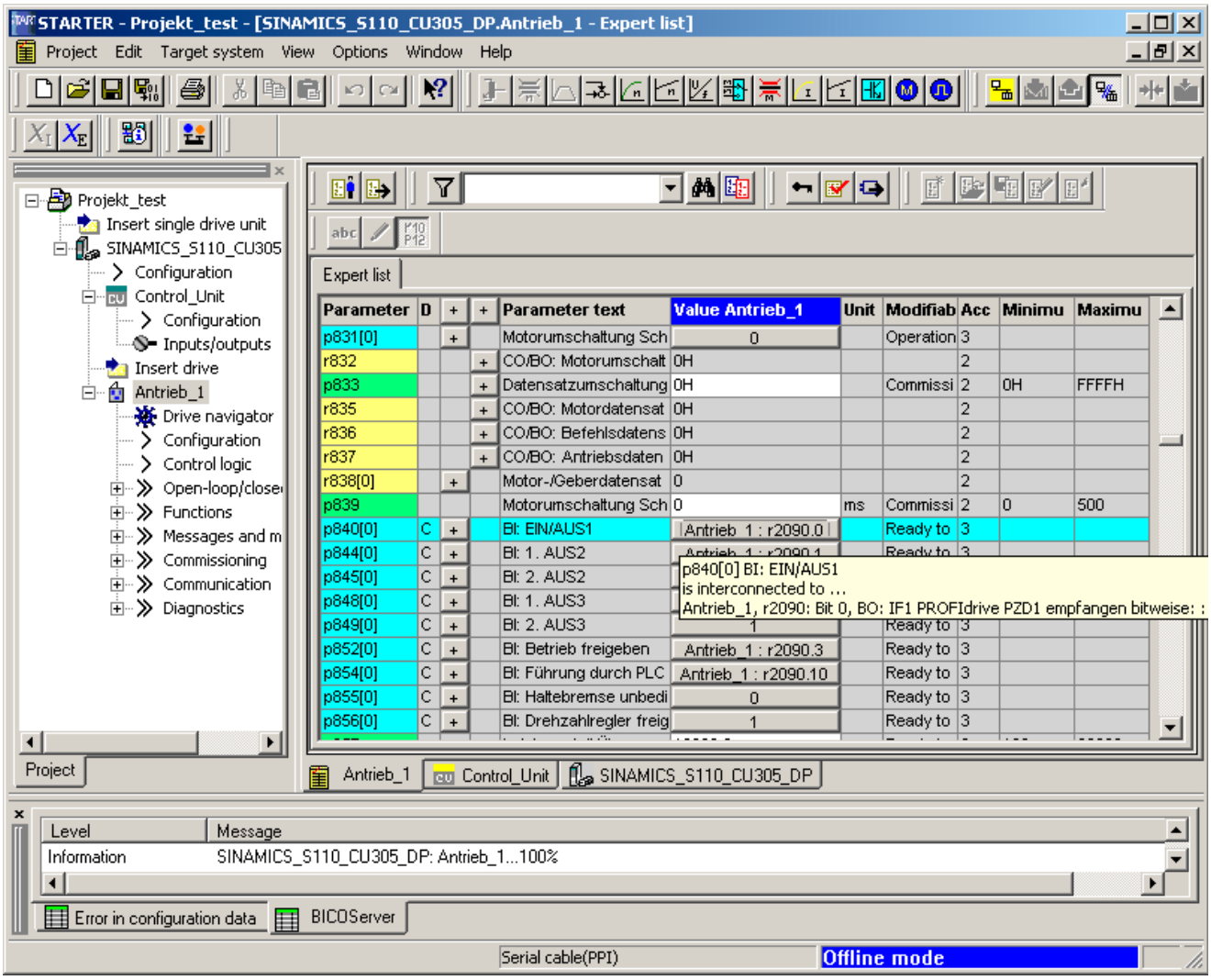

Figure 1-6 Interconnect 5

Graphical screen interface

When carrying out BICO interconnection via the graphical screen interface, proceed as follows:

For the set velocity, which is a 32-bit data type, you want to interconnect p parameter **p1155[0]** for "Speed setpoint 1" with r parameter **r2060[1]**, for example.

1. In the project navigator under **Drive_1 > Open-loop/closed-loop control**, double-click the selection **Setpoint addition**.

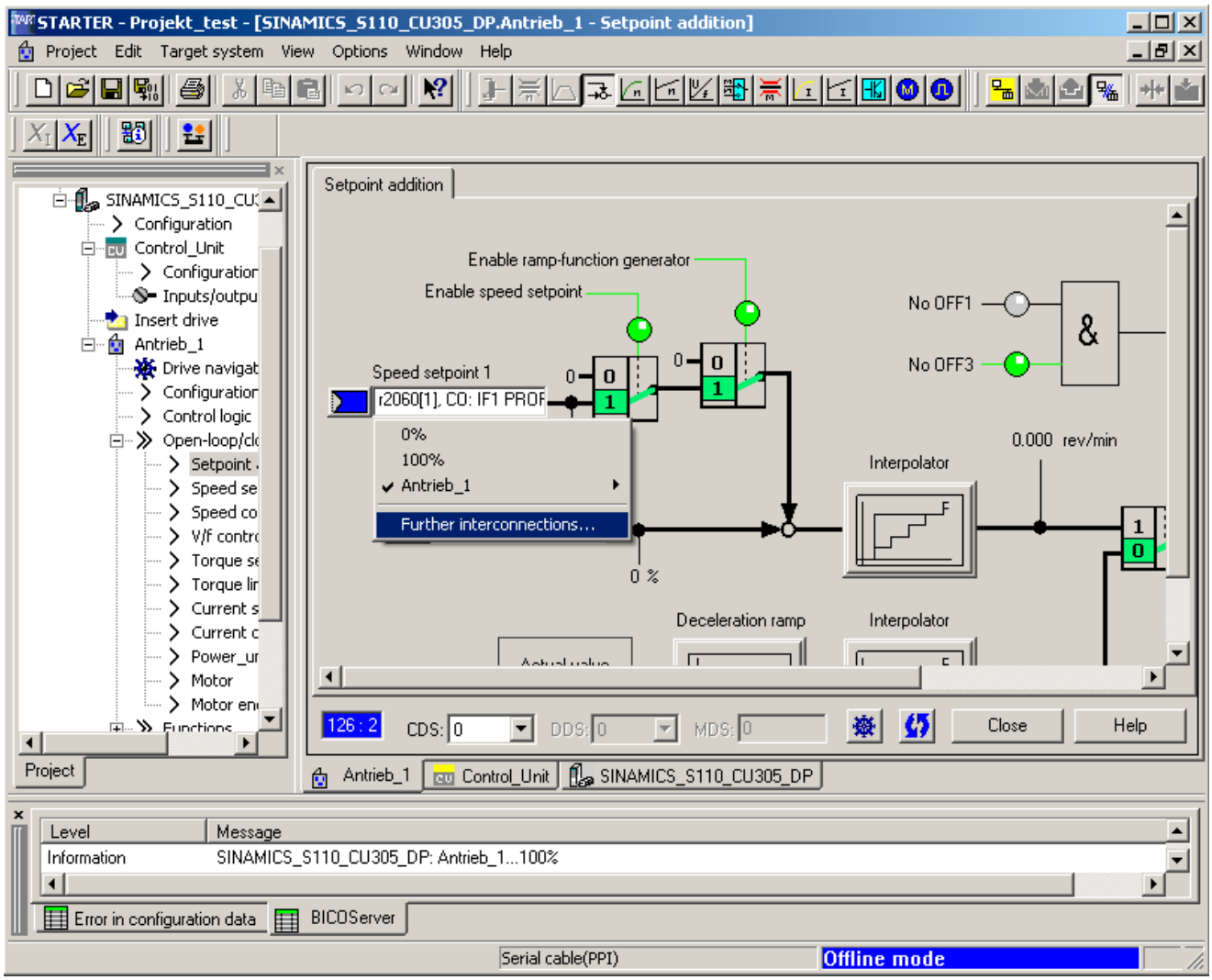

Figure 1-7 Interconnection via graphical screen interface 2

2. Click the **blue** field to the left of the field for **Speed setpoint 1** and then double-click the selection **Further interconnections**, which is now displayed.

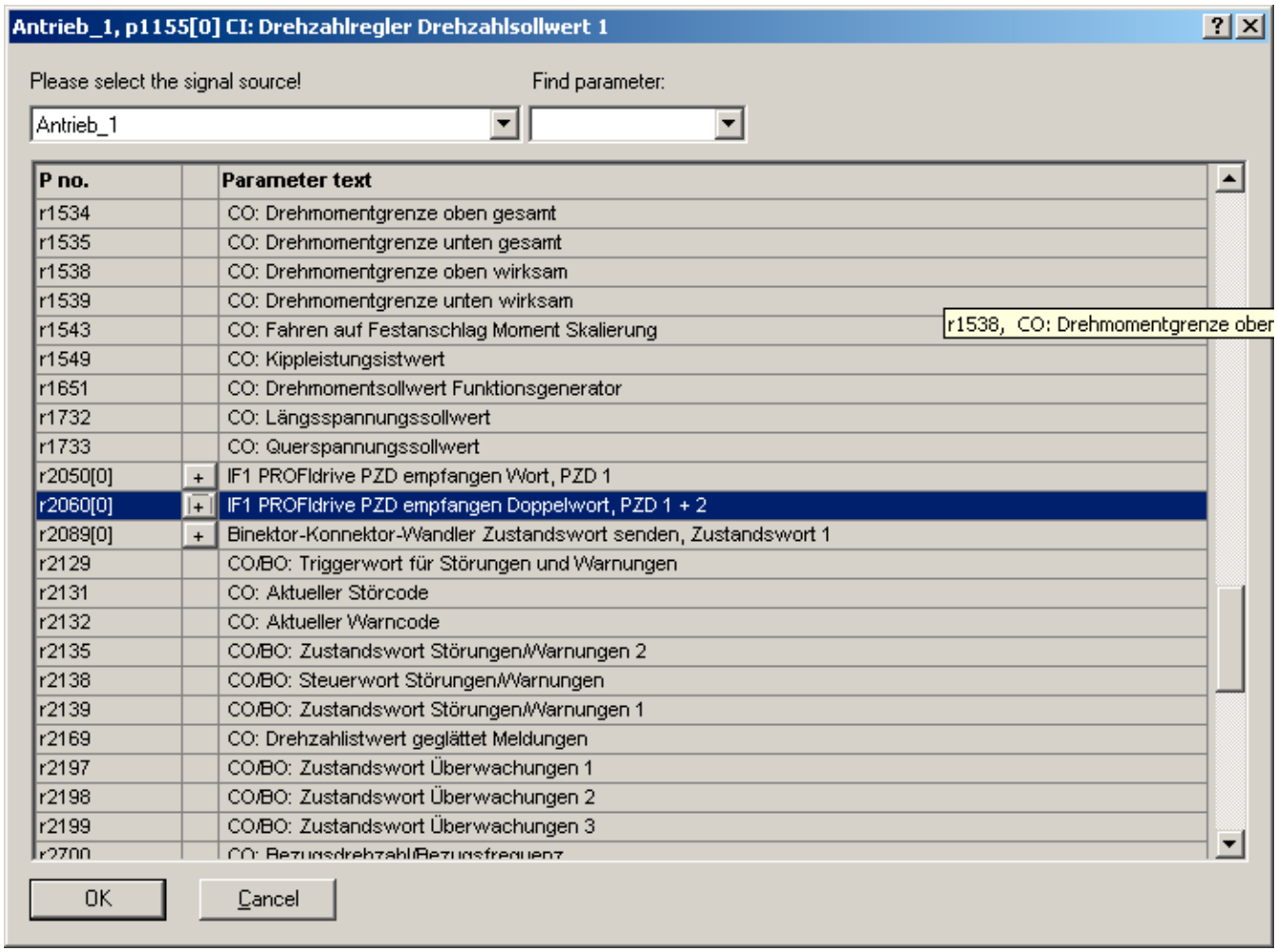

Figure 1-8 Interconnection via graphical screen interface 3

3. A list from which you can select the available r parameters is now displayed.

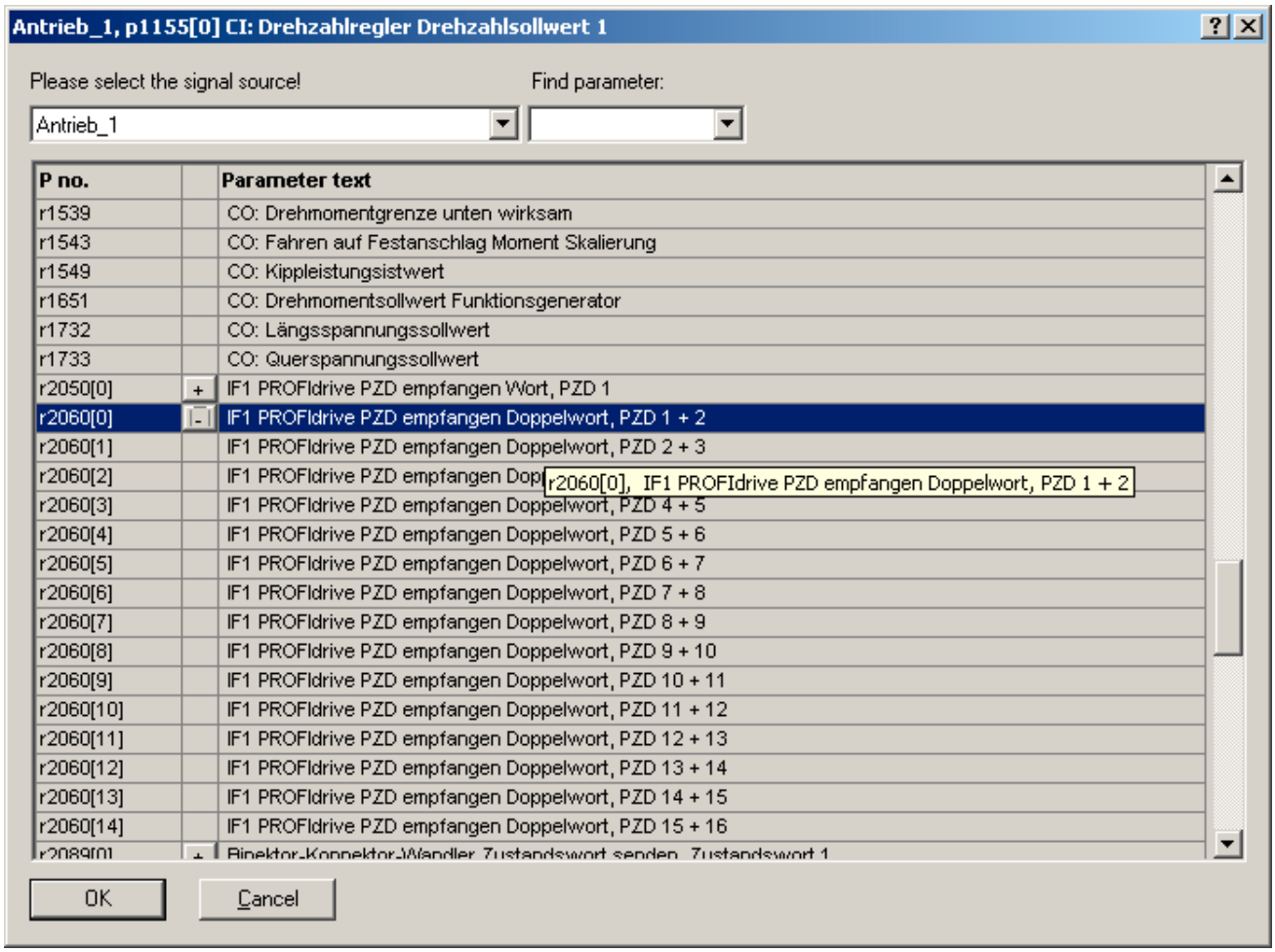

Figure 1-9 Interconnection via graphical screen interface 4

4. Double-click **r2060: Bit1**.

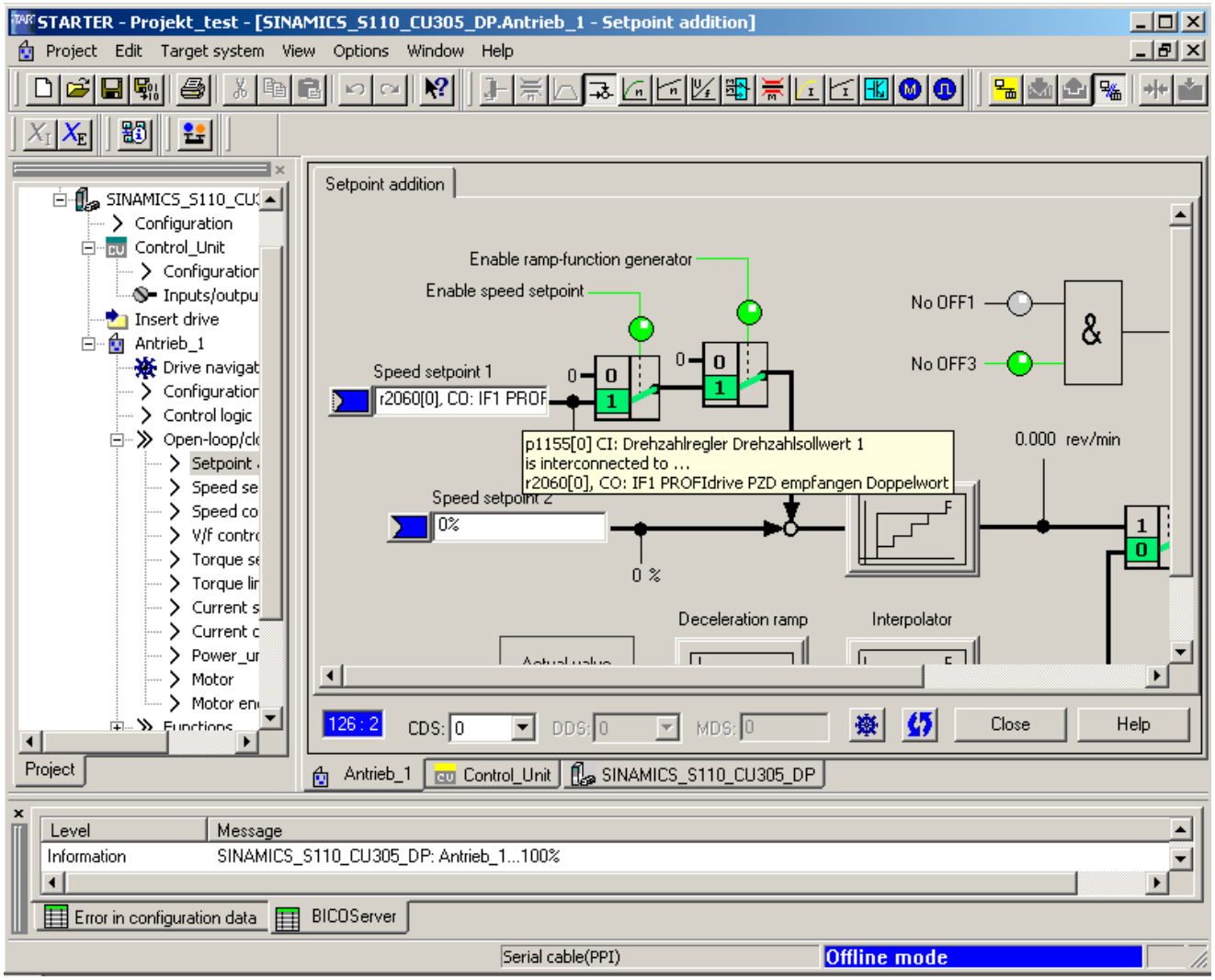

Figure 1-10 Interconnection via graphical screen interface 5

5. In the graphical screen interface, you can now see that **p1155** has been interconnected with r parameter **r2060[1]**.

1.3 Notes on the commissioning of a 2-pole resolver as absolute encoder

Description

2-pole (1 pole pair) resolvers can be used as singleturn absolute encoders. The absolute encoder actual position value is provided in Gn_XIST2 (r483[x]).

Actual position value format

The factory setting for the fine resolution of Gn_XIST1 differs from the fine resolution in Gn_XIST2 (p0418=11, p0419=9). For this reason, there can be slight displacement of the encoder position after switching the drive unit off/on.

Therefore, when using a 2-pole resolver as an absolute encoder, we recommend that the fine resolution for Gn_XIST1 (p0418) be set to the same as the fine resolution for Gn_XIST2 (p0419), e.g. p0418=p0419=11.

2-pole resolvers are automatically entered in the PROFIdrive profile (r0979) as singleturn absolute encoders.

Position tracking

The position tracking can also be activated for a 2-pole resolver. Note that when switched off, the resolver may not be moved more than half an encoder revolution (pole width). The activation and configuration of the position tracking is described in the chapter "Position tracking".

EPOS - absolute encoder adjustment

If the 2-pole resolver is used as an absolute encoder for basic positioning (EPOS), the absolute encoder adjustment must be performed:

- via STARTER (Basic positioner -> Referencing) or
- via the expert list.

  To do this, the reference point coordinate p2599 is set to the value corresponding to the mechanical system and the adjustment requested with p2507=2.

The data is then saved by copying from RAM to ROM.

1.4 Temperature sensors for SINAMICS components

The following table provides an overview of the components which are available in SINAMICS S110 with temperature sensor connections.

Table 1- 1 Temperature sensor connections for SINAMICS components

Module	Interface	Pin	Signal name	Technical specifications
SMC10/SMC20	X520 (sub D)	13 25	+Temp - Temp	Temperature sensor KTY84/130 / PTC
SMC30	X520 (sub D) Temperature channel 2	1 8	+Temp - Temp	Temperature sensor KTY84/130 / PTC / bimetallic-element switch with NC contact
	X531 (terminal) Temperature channel 1	3 4	- Temp +Temp	Temperature sensor KTY84/130 / PTC / bimetallic-element switch with NC contact
CU305	X133 (terminal) Temperature channel 1	7	+ Temp	Motor temperature measurement KTY84/130 (KTY+) Temperature sensor connection KTY84/130 / PTC
		8	M (- Temp)	Ground for KTY or PTC
CU305	X23 (sub D)	1 8	+Temp - Temp	Temperature sensor KTY84/130 / PTC / bimetallic-element switch with NC contact

[1)] Cable for connection to direct measurement systems: Order number 6FXx002-2CB54-xxxx

Commissioning information

The index [0..n] used in the following identifies either the motor data set or the encoder data set.

SMC10/SMC20

The parameterization of the motor temperature evaluation via the sub D socket X520 can be performed using the Starter screen (signals and monitoring \ Motor temperature).

SMC30

In addition to temperature evaluation via terminal X531 (temperature channel 1), this module also has temperature evaluation at SUB-D socket X520 (temperature channel 2).

At the default setting (p0600 = 1 "Temperature via encoder 1" and p0601 = 20 "KTY") the temperature is analyzed using the first temperature channel. The temperature sensor is connected to terminal X531 on the SMC30. The temperature is shown via r0035.

The parameterization of the motor temperature evaluation via the sub D socket X520 must be performed in the expert list as follows:

- p0600[0..n]: Selection of the encoder (1 or 2) to which the SMC30, that is used for the temperature evaluation, is assigned (n = motor data set).
- p0601[0..n] = 10 (evaluation via several temperature channels), n = motor data set.
- p4601[0..n]: Select the temperature sensor type for temperature channel 2 (depends on encoder data set n, not motor data set).

For multiple temperature channels (use of temperature channels 1 and 2 on SMC30), parameter r0035 shows the maximum temperature.

Example:

A KTY temperature sensor is connected at the sub D socket X520 on the SMC30 of Encoder 1.

This is parameterized via:

- p0600[0..n] = 1 / p0601[0..n] = 10 / p4601[0..n] = 20

Both temperature channels (X520 and X531) can be used at the same time. In addition to the above parameterization, the sensor type of the temperature sensor connected at terminal X531 must be entered in p4600[0..n]. The maximum value is then generated for the motor temperature and displayed in r0035.

SME20

Parameterization of the evaluation of KTY and PTC temperature sensors, connected at connector X100, can be performed using the STARTER screen (\Signals and monitoring \ Motor temperature).

CU305

A temperature sensor can also be connected to this module using terminal X133 or sub D socket X23.

The parameterization of the motor temperature evaluation via the sub D socket X23 or terminal X133 can be performed using the Starter screen (\Signals and monitoring \ Motor temperature).

It is not possible to use both temperature channels (X23 and X133) at the same time. Both channels are connected with each other. The sensors would be connected in parallel and the temperature display would show the wrong value.

Faults and alarms

F07011 drive: Motor overtemperature

KTY sensor:
The motor temperature has exceeded the fault threshold (p0605) or the timer stage (p0606) after the alarm threshold was exceeded (p0604) has expired.
This results in the reaction parameterized in p0610.

PTC sensor:
The response threshold of 1650 Ohm was exceeded and the timer stage (p0606) has expired.
This results in the reaction parameterized in p0610.

If an SME Module is used (p0601 = 10), parameter r0949 displays the number of the sensor channel that has triggered the message.

A07015 drive: Motor temperature sensor alarm

An error was detected when evaluating the temperature sensor set in p0600 and p0601.

When the fault occurs, the time is started in p0607. If the fault is still present after this time has expired, then fault F07016 is output; however, at the earliest, 1 s after alarm A07015.

If an SME Module is used (p0601 = 10), parameter r2124 displays the number of the sensor channel that has triggered the message.

F07016 drive: Motor temperature sensor fault

An error was detected when evaluating the temperature sensor set in p0600 and p0601.

If alarm A07015 is present, the time in p0607 is started. If the fault is still present after this time has expired, then fault F07016 is output; however, at the earliest, 1 s after alarm A07015.

If an SME Module is used (p0601 = 10), parameter r0949 displays the number of the sensor channel that has triggered the message.

Function diagrams (see SINAMICS S110 List Manual)

- 8016 Signals and monitoring - Thermal monitoring of motor

Overview of important parameters (see SINAMICS S110 List Manual)

- r0035 Motor temperature
- p0600[0..n] Motor temperature sensor for monitoring
- p0601[0..n] Motor temperature sensor type
- p0604[0...n] Motor overtemperature alarm threshold
- p0605[0...n] Motor overtemperature fault threshold
- p0606[0...n] Motor overtemperature timer stage
- p0607[0...n] Temperature sensor fault timer stage
- p0610[0...n] Motor overtemperature reaction
- p460x[0...n] Motor temperature sensor (x+1) sensor type, x = 0..3

Commissioning preparations for PROFIBUS 2

Before you start commissioning, you will need to carry out the preparations described in this chapter:

- Requirements for commissioning
- PROFIBUS components

2.1 Requirements for commissioning

The basic requirements for commissioning a SINAMICS S110 drive system are as follows:

- STARTER commissioning tool
- PROFIBUS interface
- Wired drive line-up (see Equipment Manual)

The following diagram shows an overview of an example configuration with blocksize components.

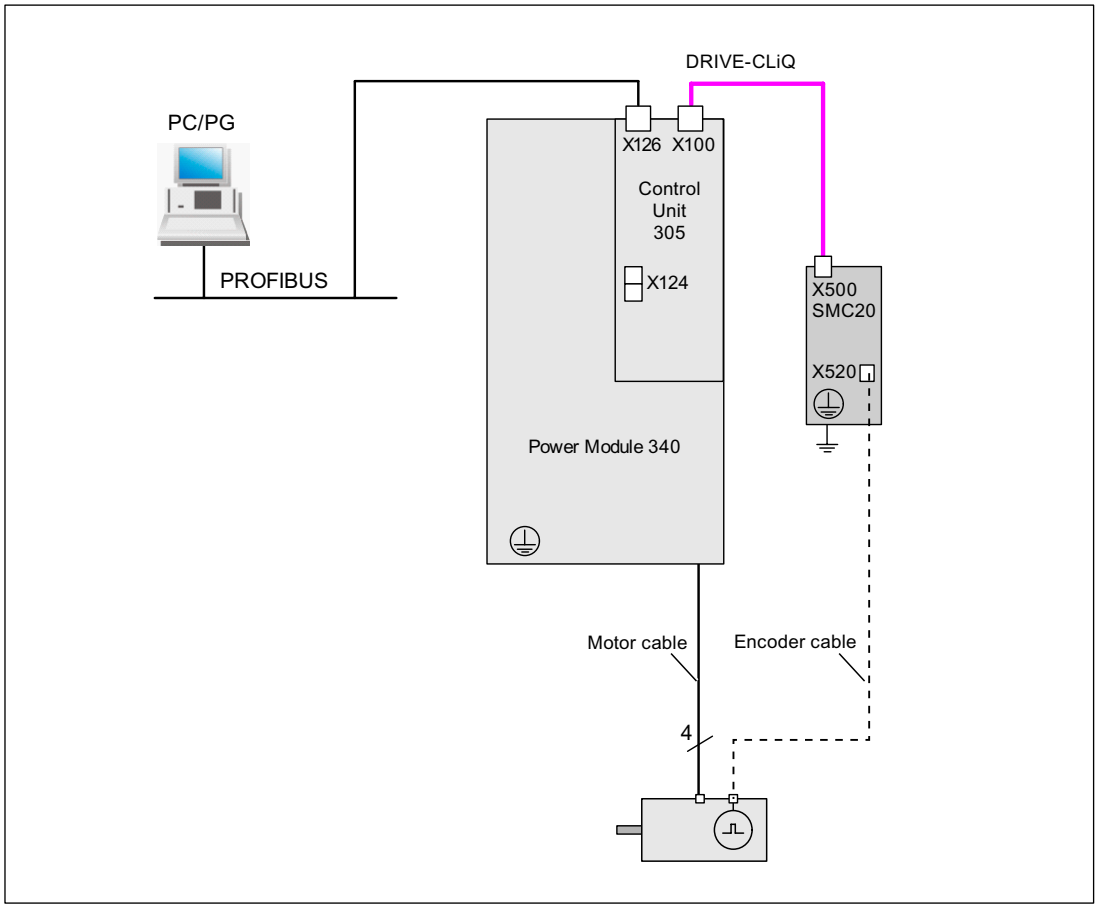

Figure 2-1 Component configuration (example)

Check list for commissioning blocksize power units

The following checklist must be carefully observed. The safety information in the Manuals must be read and understood before starting work.

Table 2- 1 Check list for commissioning blocksize

Check	O. K.
Are the ambient conditions in the permitted range (see Equipment Manual)?	
Is the component firmly attached to the fixing points provided?	
Can the cooling air flow unobstructed?	
Have the ventilation clearances for the components been observed?	
Are all necessary components of the configured drive line-up installed and available?	
Have the DRIVE-CLiQ limitations for CU305 been observed?	
Have the line-side and motor-side power cables been dimensioned and routed in accordance with the ambient and routing conditions?	
Have the maximum permissible cable lengths between the frequency converter and the motor (depending on the type of cables used) been observed?	
Have the cables been properly connected with the correct torque to the component terminals?	
Have the cables for the motor and low-voltage switchgear been connected with the required torques?	
Has all wiring work been successfully completed?	
Are all connectors correctly plugged in and screwed in place?	
Have all the screws been tightened to the specified torque?	
Are the shield connections installed correctly?	

2.2 PROFIBUS components

We recommend the following components for communication via PROFIBUS:

1. Communication modules if PG/PC interface via the **PROFIBUS interface**
   - CP5511 (PROFIBUS connection via PCMCIA card in notebook as programming device)
     The PROFIBUS card CP5511 allows a maximum of 10 slave connections.
     For larger projects (many CUs) with several drive units and thus with more than 10 PROFIBUS slaves, problems may occur with the notebook when going online with STARTER.
     Remedy: Replace interface card CP5511 with a CP5512 interface card or via menu item "Select target system/target devices..." only select the drive units that you actually want to work with.
   - CP5512 (PROFIBUS connection via CARDBUS)

     Configuration: PCMCIA type 2 card + adapter with 9-pin SUB-D socket for connection to PROFIBUS.

     For MS Windows 2000/XP Professional and PCMCIA 32 only

     Order No.: 6GK1551-2AA00
   - CP5611 A2 (PROFIBUS connection via short PCI card)

     Configuration: Short PCI card with 9-pin SUB-D socket for connection to PROFIBUS.

     Not for Windows 95/98SE

     Order No.: 6GK1561-1AA01
   - CP5613 A2 (PROFIBUS connection via short PCI card)

     Configuration: Short PCI card with 9-pin SUB-D socket for connection to PROFIBUS.

     Order No.: 6GK1561-3AA01
2. **Connection cable**
   - between: CP 5xxx <--> PROFIBUS

     Order No.: 6ES7901-4BD00-0XA0
   - MPI cable (SIMATIC S7)
     Order No.: 6ES7901-0BF00-0AA0

Cable lengths

Table 2- 2 Permissible PROFIBUS cable lengths

Baud rate [bit/s]	Max. cable length [m]
9.6 k to 187.5 k	1000
500 k	400
1.5 M	200
3 to 12 M	100

2.3 Connection via serial interface

Prerequisite

There must be a serial interface (COM) on the PC from which the connection is to be made.

Settings

1. In the STARTER, go to **Project > Set PG/PC interface** and select the **Serial cable (PPI)** interface.
   If this interface is not in the selection list, you will first have to add it using **Select**.

   Note

   If the interface cannot be added to the selection menu, the driver for the serial interface has to be installed.
   This is located under the following path on the STARTER CD:
   \installation\starter\starter\Disk1\SerialCable_PPI\
   The STARTER must not be active while the driver is being installed.

2. Enter the following settings. The "0" address and the transmission rate (e.g. 19.2 kbit/s) are important here.

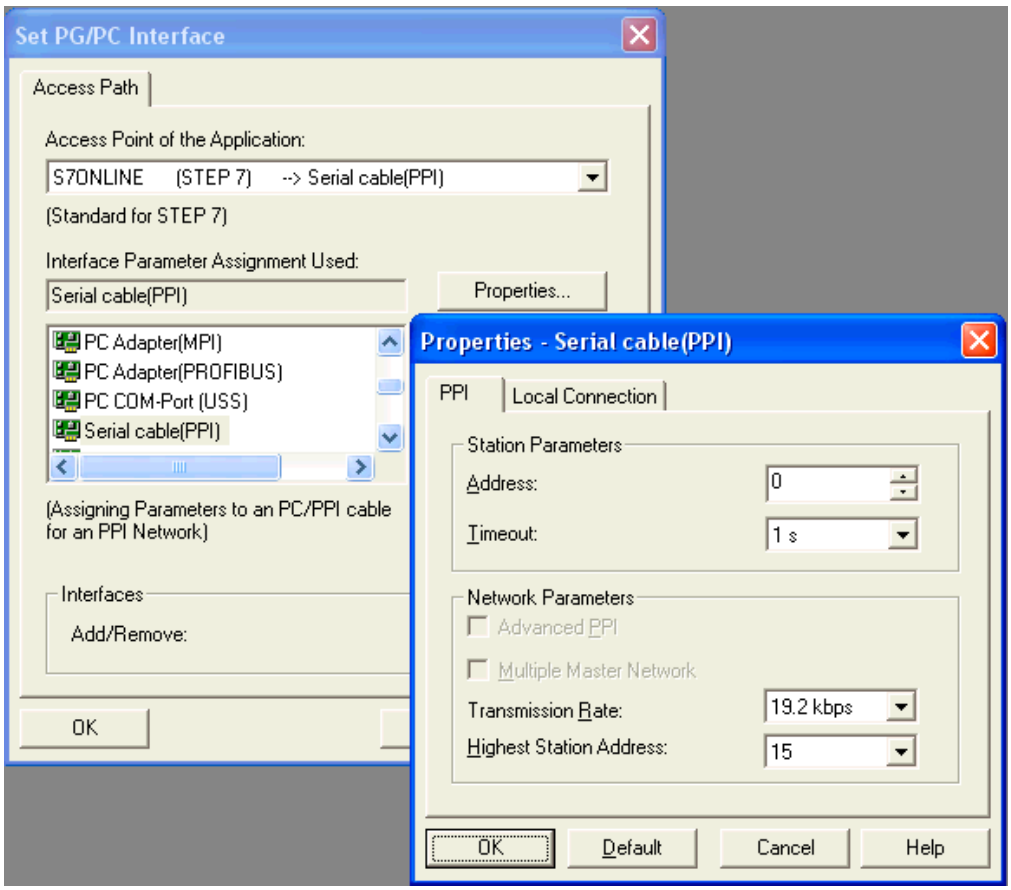

Figure 2-2 Setting the interface

3. The Control Unit's PPI address is pre-set to "3" in the factory.
4. Also set the bus address to "3" during set-up, or under "properties" in the drive unit context menu.

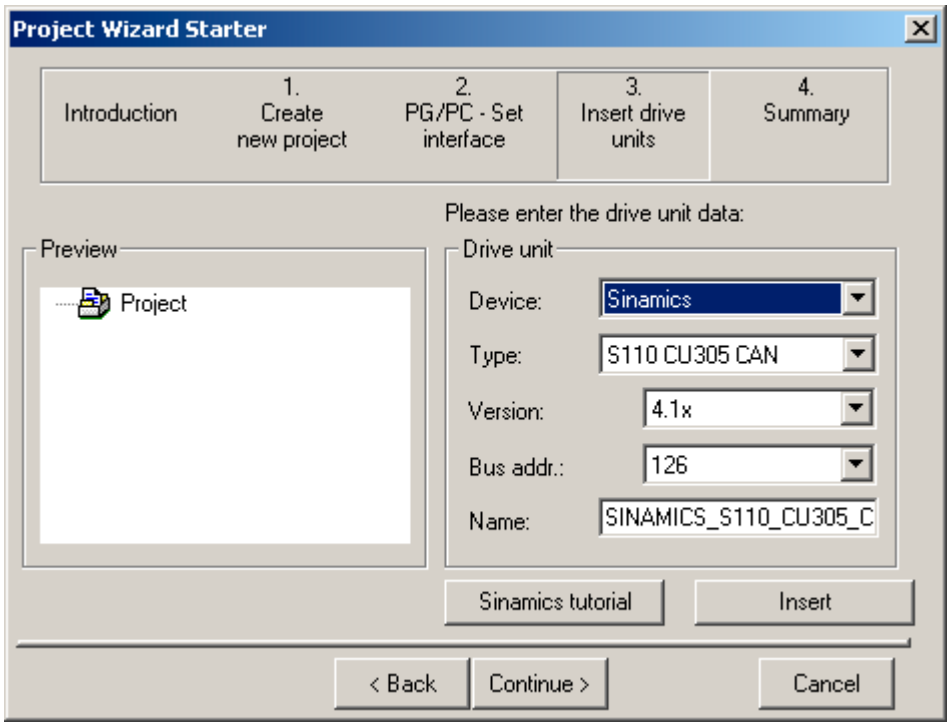

Figure 2-3 Setting the bus address

5. A null modem cable must be used to connect the PC (COM interface) to the Control Unit. This interface must not be switched.

2.4 DRIVE-CLiQ interface for CU305

The CU305 has a DRIVE-CLiQ interface. You may connect exactly one of the following components to this interface:

- SMI motor
- 1 encoder of type SMC10, SMC20, SMC30, SME20 or SME25

Further components or connections to the DRIVE-CLiQ interface are not permitted and lead to errors in the drive system.

2.5 Powering-up/powering-down the drive system

Powering-up the drive

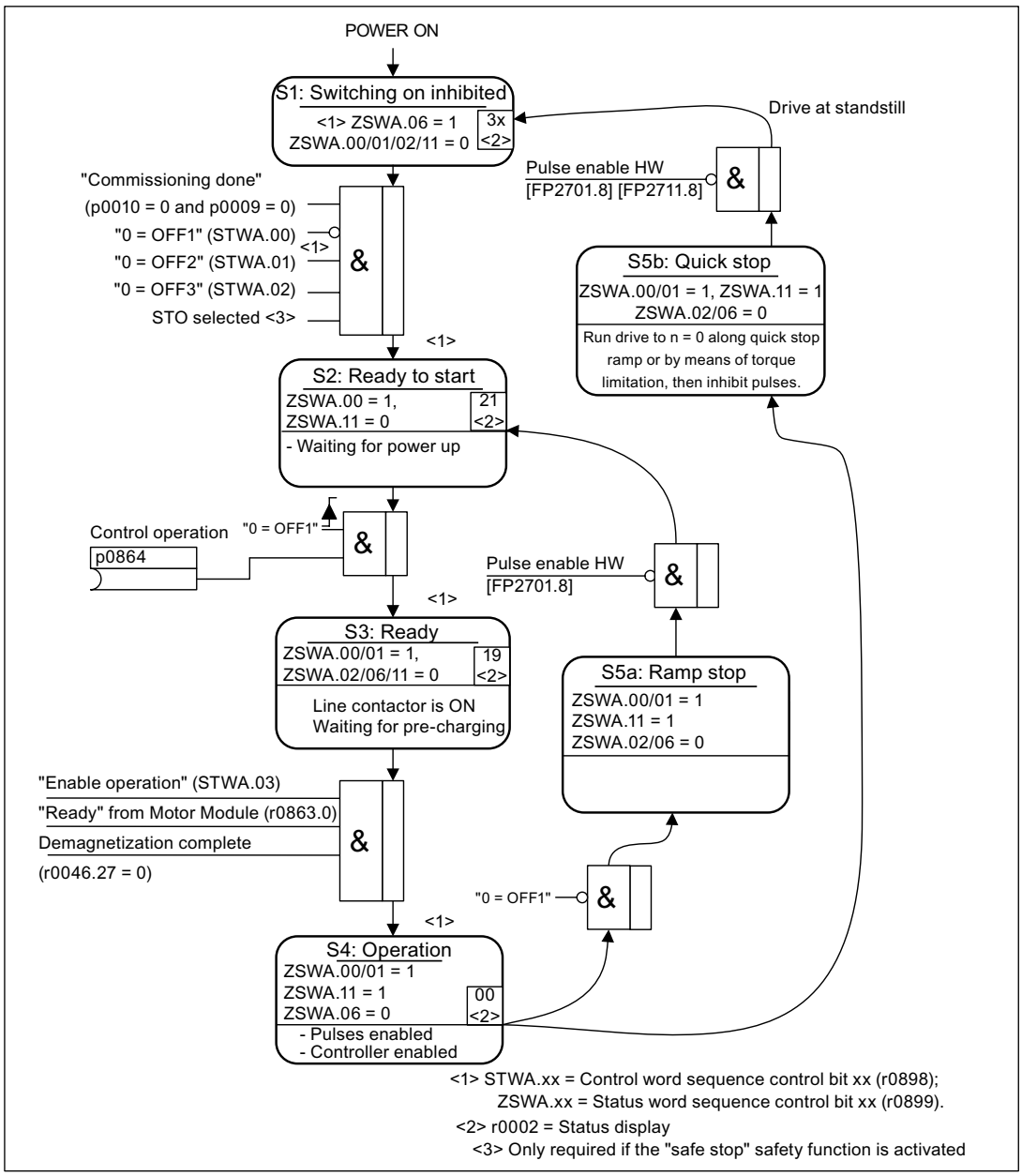

Figure 2-4 Powering-up the drive

Off responses

- OFF1
  - n_set = 0 is input immediately to brake the drive along the deceleration ramp (p1121).
  - When zero speed is detected, the motor holding brake (if parameterized) is closed (p1215). The pulses are suppressed when the brake application time (p1217) expires. Zero speed is detected when the actual speed drops below the speed threshold (p1226) or once the monitoring time (p1227) started when speed setpoint ≤ speed threshold (p1226) has expired.
- OFF2
  - Immediate pulse suppression, the drive coasts to a standstill.
  - The motor holding brake (if parameterized) is closed immediately.
  - Switching on inhibited is activated.
- OFF3
  - n_set = 0 is input immediately to brake the drive along the OFF3 deceleration ramp (p1135).
  - When zero speed is detected, the motor holding brake (if parameterized) is closed. The pulses are suppressed when the brake application time (p1217) expires. Zero speed is detected when the actual speed drops below the speed threshold (p1226) or once the monitoring time (p1227) started when speed setpoint ≤ speed threshold (p1226) has expired.
  - Switching on inhibited is activated.

Control and status messages

Table 2- 3 Power-on/power-off control

Signal name	Internal control word	Binector input	PROFdrive/Siemens telegram 1 ... 111
0 = OFF1	STWA.00 STWAE.00	p0840 ON/OFF1	STW1.0
0 = OFF2	STWA.01 STWAE.01	p0844 1. OFF2 p0845 2. OFF2	STW1.1
0 = OFF3	STWA.02	p0848 1. OFF3 p0849 2. OFF3	STW1.2
Enable operation	STWA.03 STWAE.03	p0852 Enable operation	STW1.3

Table 2- 4 Switch-in/switch-out status signal

Signal name	Internal status word	Parameter	PROFdrive/Siemens telegram 1 ... 111
Ready to start	ZSWA.00 ZSWAE.00	r0899.0	ZSW1.0
Ready for operation	ZSWA.01 ZSWAE.01	r0899.1	ZSW1.1
Operation enabled	ZSWA.02 ZSWAE.02	r0899.2	ZSW1.2
Switching on inhibited	ZSWA.06 ZSWAE.06	r0899.6	ZSW1.6
Pulses enabled	ZSWA.11	r0899.11	ZSW1.11 [1]

[1] Only Siemens telegrams 102 and 103

Function diagrams (see SINAMICS S110 List Manual)

- 2610 Sequence control - sequencer
- 2634 Missing enable signals, line contactor control

Commissioning with PROFIBUS 3

3.1 Sequence of operations during commissioning

Once the basic requirements have been met, you may proceed as follows to commission the drive:

Table 3- 1 Commissioning

Step	Activity
1	Create project with STARTER.
2	Configure the drive unit in STARTER.
3	Save the project in STARTER.
4	Go online with the target device in STARTER.
5	Load the project to the target device.
6	The motor starts to run.

Note

If motors with a DRIVE-CLiQ interface are used, all motor and encoder data should be saved in a non-volatile manner for spare part usage of the Sensor Module on the motor via p4692 = 1.

3.1.1 Safety guidelines

⚠ DANGER

A hazardous voltage will be present in all components for a further five minutes after the system has been shutdown.

Note the information on the component!

⚠ CAUTION

A project with Safety Integrated may not be created offline.

Note

The design guidelines and safety information in the Manuals must be carefully observed (refer to the SINAMICS S documentation, Equipment Manual).

CAUTION

In STARTER, after the changeover of the axis type via p9302/p9502 and subsequent POWER ON, the units that depend on the axis type are only updated after a project upload.

3.2 STARTER commissioning tool

Brief description

STARTER is used for commissioning drive units in the MICROMASTER and SINAMICS product ranges.

STARTER can be used for the following:

- Commissioning
- Testing (via the control panel)
- Drive optimization
- Diagnostics

System prerequisites

The system requirements for STARTER can be found in the "Readme" file in the STARTER installation directory.

3.2.1 Important STARTER functions

Description

STARTER supports the following tools for managing the project:

- Copy RAM to ROM
- Download to target device
- Load to PG/PC
- Restoring the factory settings
- Commissioning wizard
- Displaying toolbars

Copy RAM to ROM

You can use this function to save volatile Control Unit data to the non-volatile memory. This ensures that the data is still available after the 24 V Control Unit supply has been switched off.

This function can be activated as follows:

- Extras -> Setting -> Download -> Activate "Copy from RAM to ROM"

  This means that every time data is loaded to the target system by choosing "Load project to target system", the data is stored in the non-volatile memory.
- Right-click Drive unit -> Target system -> Copy from RAM to ROM
- Drive unit grayed out -> "Copy from RAM to ROM" button

NOTICE
The power supply to the Control Unit may first be switched off after saving has finished (i.e. after saving has started, wait until it has finished and parameter p0977 has the value 0 once more).

Download to target device

You can use this function to load the current STARTER project to the Control Unit. The data is loaded to the working memory of the Control Unit. A reset is then triggered.

This function can be activated as follows:

- Right-click Drive unit -> Target system -> Load to target system
- Drive unit grayed out -> "Load to target system" button
- Online/offline comparison screen -> "Load to target device" button
- Project to all drive units simultaneously:
  "Load project to target system" button, menu Project -> Load to target system

Load to PG/PC

You can use this function to load the current Control Unit project to STARTER.

This function can be activated as follows:

- Right-click Drive unit -> Target system -> Load to PG/PC
- Drive unit grayed out -> "Load project to PG/PC" button
- Online/offline comparison screen -> "Load project to PG/PC" button

Restoring the factory settings

You can use this function (p0970 = 1) to set all the parameters in the work memory of the Control Unit to the factory settings. The CU305 will then perform an automatic start. All relevant parameters found are written to the work memory (RAM). As part of this process, various factory-set parameters are automatically updated to actual (more recent) values. Once this automatic configuration is complete, a project with all available drive parameters will be available in the target system.

This function, which is called "Restore factory settings", can be activated as follows:

- Right-click Drive unit -> Target system -> Restore factory settings
- Drive unit grayed out -> "Restore factory settings" button

For more information about STARTER, see Getting Started.

Displaying toolbars

The toolbars can be activated by choosing View -> Toolbars (checkmark).

Creating and copying data sets (offline)

Drive and command data sets (DDS and CDS) can be added in the drive's configuration screen by clicking the appropriate buttons.

For more information about data sets, see the Principles chapter for the drive system.

3.2.2 Activating online operation: STARTER via PROFIBUS

Description

The following options are available for online operation via PROFIBUS:

- Online operation via PROFIBUS

STARTER via PROFIBUS (example with 2 CU305 and a CU310 DP)

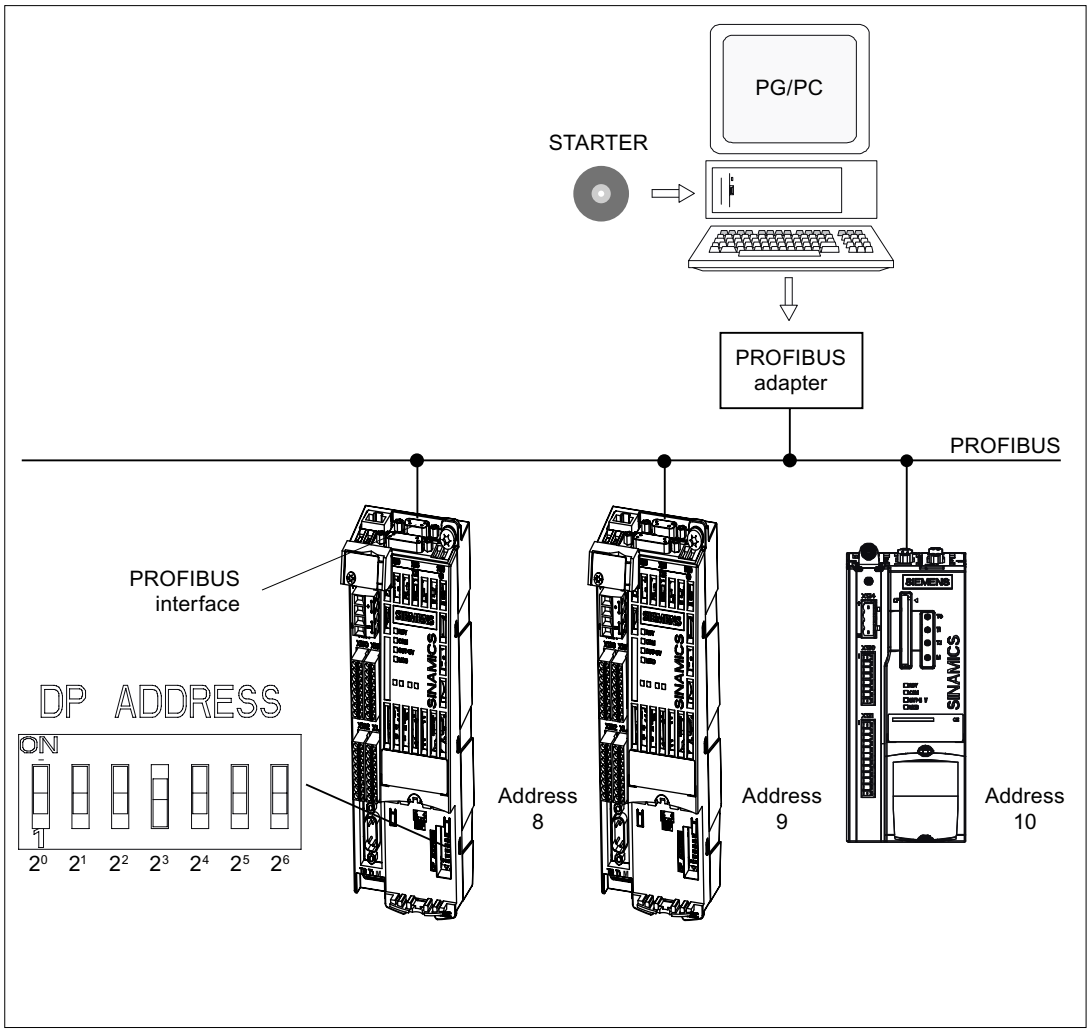

Figure 3-1 STARTER via PROFIBUS (example with 2 CU305 and a CU310 DP)

Settings in STARTER for direct online connection via PROFIBUS

The following settings are required in STARTER for communication via PROFIBUS:

- Extras -> Set PG/PC interface

Add/remove interfaces

- Extras -> Set PG/PC interface... -> Properties

  Activate/deactivate "PG/PC is the only master on the bus".

Note

- Baud rate

  Switching STARTER to a working PROFIBUS:

  STARTER automatically detects the baud rate used by SINAMICS for the PROFIBUS.

  Switching the STARTER for commissioning:

  The Control Unit automatically detects the baud rate set in STARTER.
- PROFIBUS addresses

  The PROFIBUS addresses for the individual drive units must be specified in the project and must match the address settings on the devices.

3.3 Basic Operator Panel 20 (BOP20)

Brief description

The Basic Operator Panel 20 (BOP20) is a basic operator panel with six keys and a display unit with background lighting. The BOP20 can be plugged onto the SINAMICS Control Unit and operated.

The following functions are possible using BOP20

- Entering parameters
- Display of operating modes, parameters, alarms and faults
- Powering-up/powering-down while commissioning

Further information: See 'Parameterizing using the BOP20 (Basic Operator Panel 20)' chapter

3.3.1 Important functions via BOP20

Description

Using the BOP20, the following functions can be executed via parameters that support you when handling projects:

- Restoring the factory settings
- Copy RAM to ROM
- Acknowledge error

Restoring the factory settings

The factory setting of the complete device can be established in the drive object CU.

- p0009 = 30
- p0976 = 1

Copy RAM to ROM

You can initiate the saving of all parameters to the non-volatile memory in the drive object CU:

- Press the P key for 3 seconds,
  or
- p0009 = 0
- p0977 = 1

NOTICE
This parameter is not accepted if an identification run (e.g. motor identification) has been selected on a drive.

Acknowledge error

To acknowledge all the faults that have been rectified, press the Fn key.

3.4 Creating a project in STARTER

3.4.1 Creating a project offline

To create a project offline, you need the PROFIBUS address, the device type (e.g. SINAMICS S110), and the device version (e.g. FW 4.1).

Table 3- 2 Sequence for creating a project in STARTER (example)

	What to do?	How to do it?	Remark
1.	Create a new project	• Operator action: – Menu "Project"--> New ... • User projects: – Projects already in the target directory • Name: Project_1 (can be freely selected) Type: Project Storage location (path): Default (can be set as required) 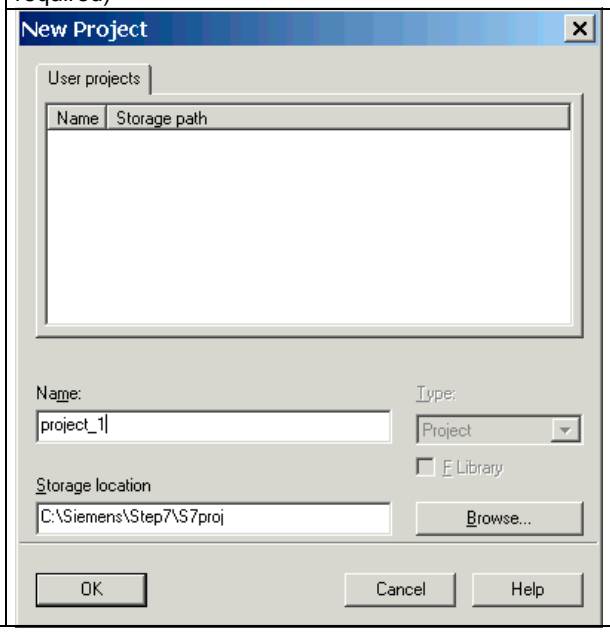 	The project is created offline and loaded to the target system when configuration is complete.

2.	Add individual drive	Operator action: --> Double-click "Add individual drive unit". Device type: SINAMICS S110 CU305 DP (can be selected) Device version: 4.1x (can be selected) Address type: PROFIBUS/USS/PPI (can be selected) Bus address: 37 (can be selected)	Information about the bus address: When commissioning the system for the first time the PROFIBUS address of the Control Unit must be set here. The address is set via the address switch on the Control Unit (or via p0918 if the address switch = "all ON" or "all OFF" (factory setting = 126)).
	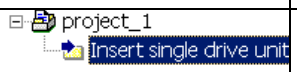	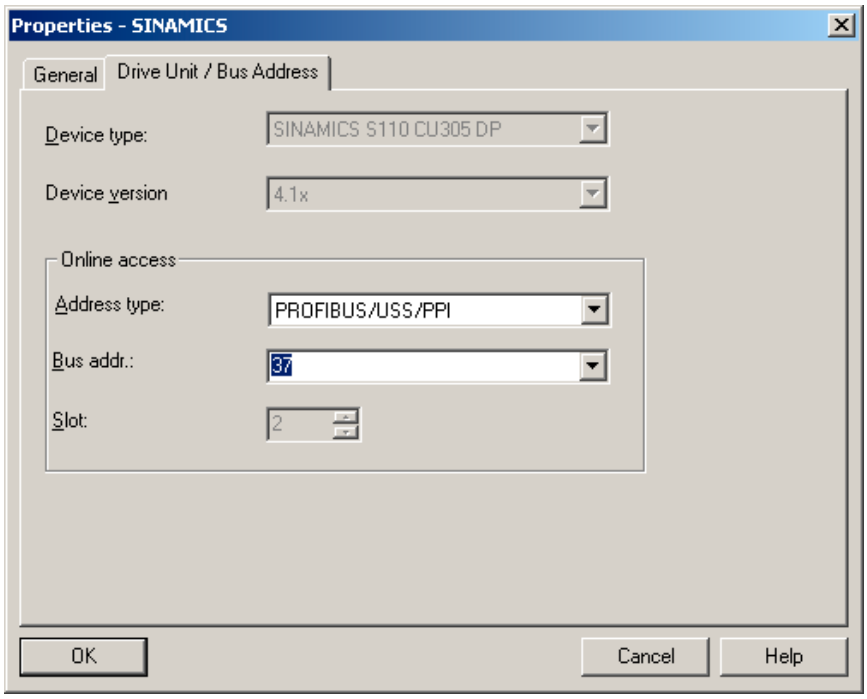	
3.	Configure the drive unit.	Once you have created the project, you have to configure the drive unit. An example appears in the next section.	

3.4.2 Searching for a drive unit online

To search for a drive unit online, the drive unit and the PG/PC must be connected via PROFIBUS.

Table 3- 3 Sequence for searching for a drive unit in STARTER (example)

	What to do?	How to do it?
1.	Create a new project	Operator action: Menu "Project"--> New with Wizard Click "Find drive unit online".
		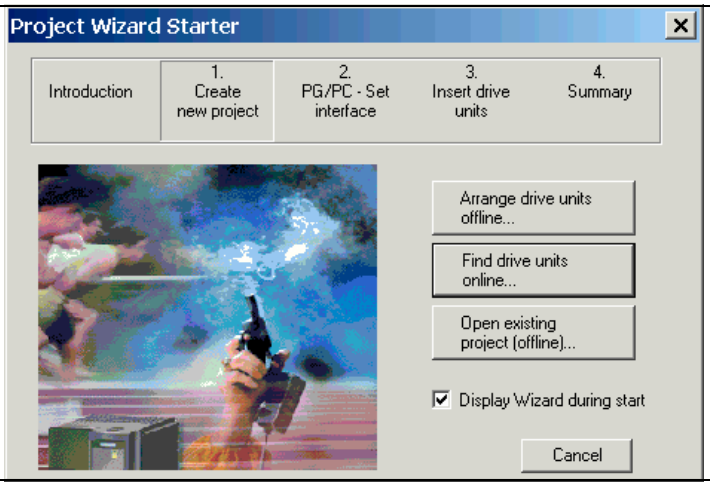
1.1	Enter the project data.	Project name: Project_1 (can be freely selected) Author: Any Remark: Any
		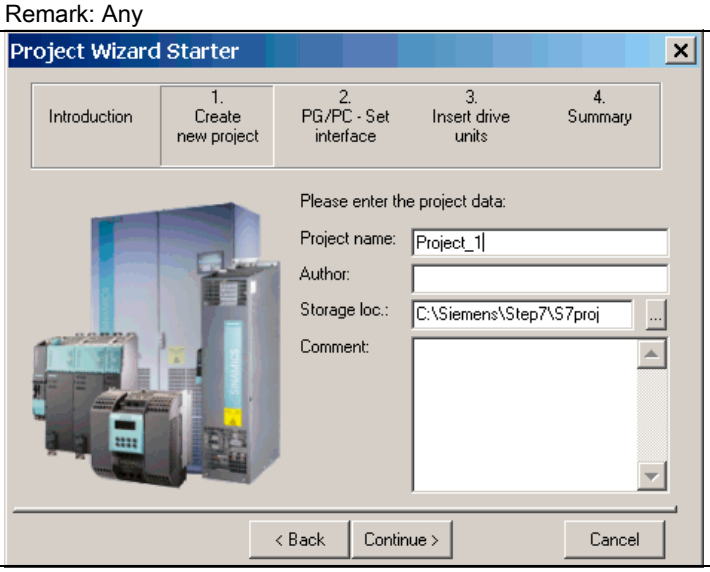

	What to do?	How to do it?
2.	Set up the PG/PC interface	Here, you can set up the PG/PC interface by clicking "Change and test". 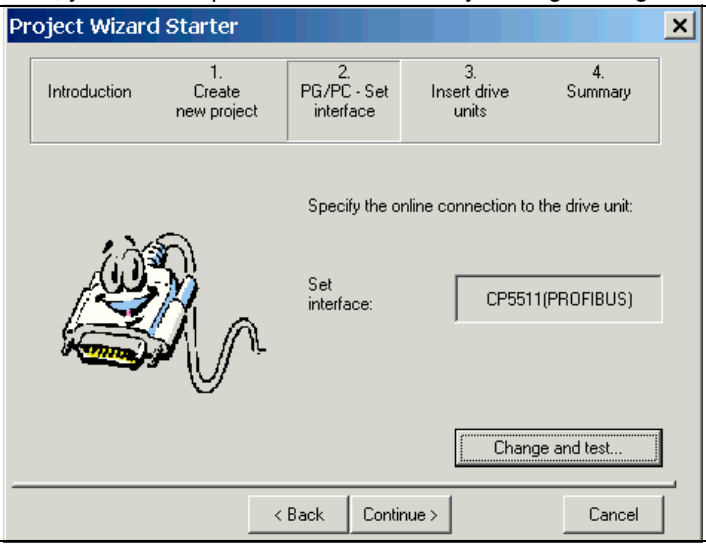
3.	Insert drives	Here, you can search for nodes that have been accessed. 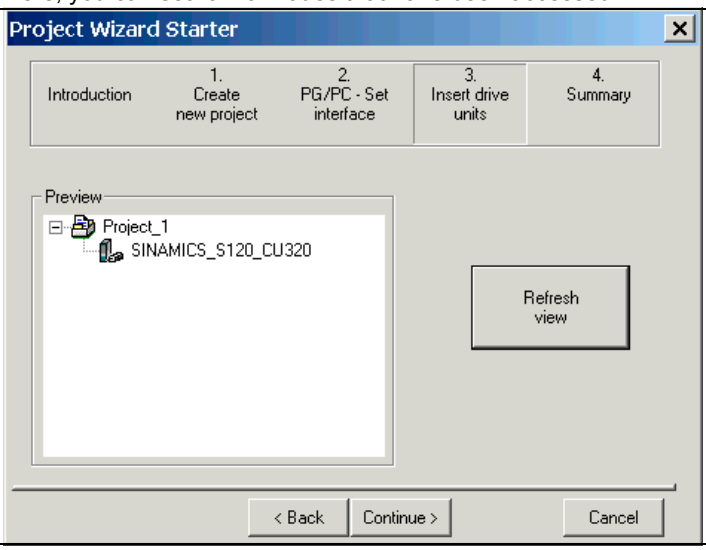

	What to do?	How to do it?
4.	Summary	You have now created the project. -> Click "Complete".
		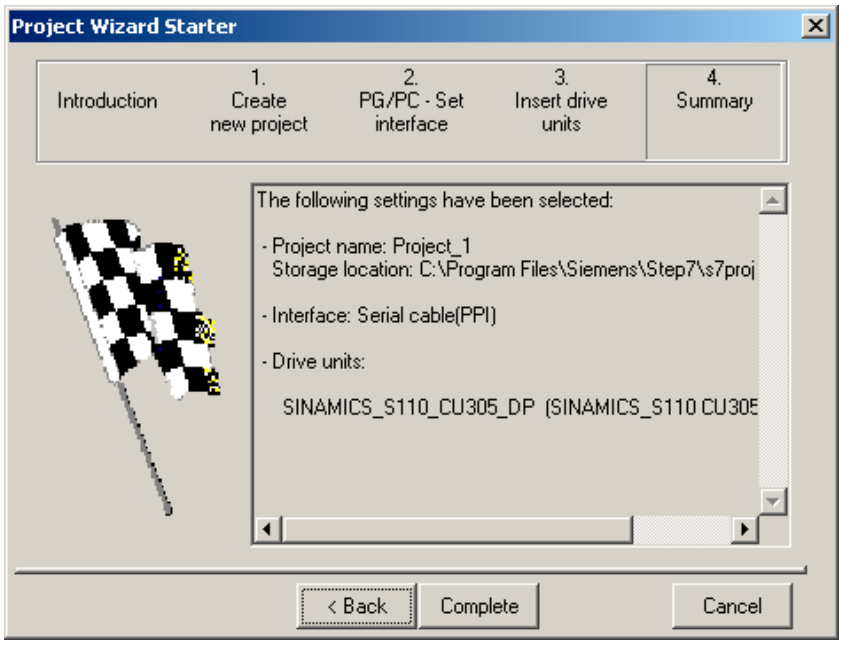
5.	Configure the drive unit.	Once you have created the project, you have to configure the drive unit. An example appears in the next section.

3.4.3 Searching for nodes that can be accessed

To search for a drive unit online, the drive unit and the PG/PC must be connected via PROFIBUS. The interface must be set correctly in STARTER.

3.5 Example of first commissioning with STARTER

The example provided in this section explains all the configuration and parameter settings that are required for first commissioning. Commissioning is carried out using the STARTER commissioning tool.

Requirements for commissioning

1. The checklist for commissioning (Table 1-1 or 1-2 in Section 1.1) has been filled out and the points ticked off.
2. STARTER is installed and activated.

   --> see the "Readme" file on the STARTER installation CD.
3. The power supply (24 VDC) is switched on.

3.5.1 Task

1. Commission a drive system with the following components:

Table 3- 4 Component overview

Designation	Component	Order number
Closed-loop control and infeed		
Control Unit	Control Unit 305	
Drive 1		
Sensor Module	SMC20	6SL3055-0AA00-5BAx
Motor	Synchronous motor	1FK7061–7AF7x–xxxx
Motor encoder	Incremental encoder sin/cos C/D 1 Vpp 2048 p/r	1FK7xxx–xxxxx–xAxx

2. The drive is to be enabled via PROFIBUS.

- Telegram for drive 1
- Standard telegram 4: Speed control, 1 position encoder

Note

For more information about telegram types, see the section titled "Communication via PROFIBUS" or see the SINAMICS S110 List Manual.

3.5.2 Commissioning with Starter (example)

The table below describes the steps for commissioning with STARTER.

Table 3- 5 Sequence for commissioning with STARTER (example)

	What to do?	How to do it?	Remark
1.	Automatic configuration	Operator action: -> "Project" -> "Connect to target system" -> Double-click "Automatic configuration". -> Follow the instructions provided in the wizard.	-
2.	Configuring a drive	The drive needs to be configured as follows. -> "Drive_1" -> Double-click "Configuration" -> Click "Configure DDS"	-
3.1	Control structure	You can activate the function modules. You can select the control type.	-
3.2	Power unit	The wizard displays the data determined automatically from the electronic type plate.	-
3.3	Motor	The name of the motor (e.g. tooling labeling) can be entered. Select standard motor from list: Yes Select the motor type (see type plate).	You can select a standard motor from the motor list or you can enter the motor data manually. You can then select the motor type.
3.4	Motor brakes	Here, you can configure the brake and activate the "Extended brake control" function module.	For more information, see the Function Manual.
3.5	Encoder	Motor encoder: Select a standard encoder from the list: Yes Select "2048, 1 Vpp, A/B C/D R"	If you are using an encoder that does not appear in the list, you can also enter the data manually.
3.6	Process data exchange	PROFIBUS telegram type 4 (drive 1) and 3 (drive 2) must be selected.	-
3.7	Summary	For system documentation purposes, the drive data can be copied to the clipboard and then pasted into a text program, for example.	-
Note The reference parameters and limit values can be protected against being automatically overwritten in STARTER by setting p0340 = 1: Drive -> Configuration-> Reference parameters/Blocked list tab.			
4.	Save the parameters on the device	• Connect with target system (go online) • Target system -> Download to target device • Target system -> Copy RAM to ROM (saving data to non-volatile memory)	Point the mouse at the drive unit (SINAMICS S110) and right-click.
5.	The motor starts to run.	The drive can be set in motion using the control panel in STARTER. • Following the pulse enable, the drive will switch to operating status.	For more information about the control panel, see the STARTER online help. The control panel supplies the control word 1 (STW1) and speed setpoint 1 (NSOLL).

STARTER diagnosis options

Under "Component" -> Diagnosis -> Control/status words

- Control/status words
- Status parameters
- Alarm history

3.6 Initial commissioning: Servo AC DRIVE with BOP20 as an example

The example provided in this section explains all the configuration and parameter settings that are required for first commissioning. Commissioning is performed using the BOP20.

Commissioning requirement

- The check list for commissioning (Table 1-1 or 1-2 from Section 1.1) has been filled out and the points complied with.

3.6.1 Task

1. Commission a drive unit (operating mode servo, closed-loop speed control) with the following components:

Table 3- 6 Component overview

Designation	Component	Order number
Closed-loop control		
Control Unit	Control Unit 305 DP	6SL3040-0JA00-0AA0
Operator Panel	Basic Operator Panel 20 (BOP20)	6SL3055-0AA00-4BAx
Drive		
Power Module	Power Module 340	6SL3210-xxxx-xxxx
Motor	Synchronous motor with DRIVE-CLiQ interface	1FK7061–7AF7x–xAxx
Motor encoder via DRIVE-CLiQ	Incremental encoder sin/cos C/D 1 Vpp 2048 p/r	1FK7xxx–xxxxx–xAxx

2. Commissioning is performed using the BOP20.

3. The function keys of the Basic Operator Panel (BOP) should be parameterized so that the ON/OFF signal and the speed setpoints are entered using these keys.

3.6.2 Component wiring (example)

The following diagram shows a possible component configuration and wiring option.

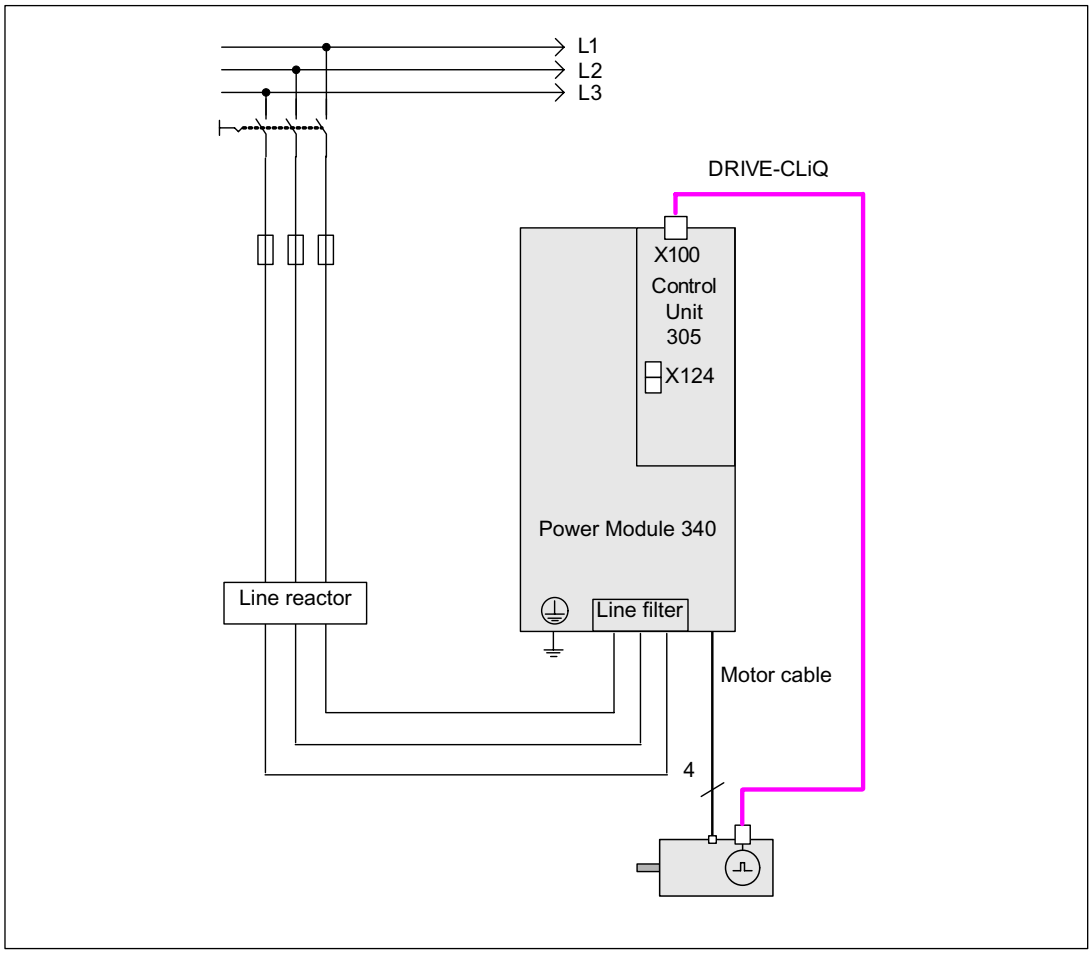

Figure 3-2 Component wiring with integrated Sensor Module (example)

For more information on wiring and connecting the encoder system, see the Equipment Manual.

3.6.3 Quick commissioning using the BOP (example)

Table 3- 7 Quick commissioning for a motor with a DRIVE-CLiQ interface

	Procedure	Description		Factory setting
Note: The drive must be set to the factory settings before first commissioning is carried out.				
1.	p0009 = 1	**Device commissioning parameter filter ***		1
		0	Ready	
		1	Device configuration	
		30	Parameter reset	
2.	p0009 = 2	**Device commissioning parameter filter ***		1
		0	Ready	
		1	Device configuration	
		2	Defining the drive type / function module	
		30	Parameter reset	
Note: When a configured DRIVE-CLiQ component is booted for the first time, the firmware is automatically updated to the status in the non-volatile memory. This may take a few minutes and is indicated by the READY-LED on the corresponding components flashing green/red and the Control Unit flashing orange (0.5 Hz). Once all updates have been completed, the READY-LED on the Control Unit flashes orange at 2 Hz and the corresponding READY-LED on the components flashes green/red at 2 Hz. For the firmware to be activated, a POWER ON must be carried out for the components.				
3.	p0108[1] = H0004		**Drive object, function module ***	0000
		Bit 8	Extended setpoint channel	
4.	p0009 = 0	**Device commissioning parameter filter ***		1
		0	Ready	
		1	Device configuration	
		30	Parameter reset	
5.	DO = 2	**Select drive object (DO) 2 (= SERVO)**		1
		1	CU	
		2	SERVO	
		To select a drive object (DO), simultaneously press the Fn key and an arrow key. The selected project is displayed at the top left.		
6.	p0840[0] = r0019.0(DO 1)	**BI: ON/OFF1 [CDS]** Sets the signal source for STW1.0 (ON/OFF1) Interconnection with r0019.0 of the drive object Control Unit (DO 1) Effect: Signal ON/OFF1 from the BOP		0
7.	p1070[0] = r1024	**CI: Main setpoint [CDS]** Sets the signal source for speed setpoint 1 of the speed controller. Interconnecting to r1024 on its own drive object		0
8.	Save all parameters	Press the P key for 3 s.		

	Procedure	Description	Factory setting
9.		Switching the drive on with the ON pushbutton Binector output r0019.0 is set using this pushbutton.	

* These parameters offer more setting options than the ones described here. For more possible settings, see the SINAMICS S110 List Manual.

[CDS] Parameter depends on command data sets (CDS). Data set 0 is preset.
[DDS] Parameter depends on drive data sets (DDS). Data set 0 is preset.
BI binector input
BO binector output
CI connector input
CO connector output

Commissioning with CANopen 4

4.1 Requirements for commissioning

4.1.1 Pre-requisites for commissioning the CANopen interface

Section content

This section describes the commissioning prerequisites:

- CU305 CAN with connection to PC/PG
- The STARTER commissioning tool on the PC/PG

You can find a detailed description of the CANopen interface on the CU305 CAN in the /GH8/ Manual and in the /IH2/ CANopen Commissioning Manual.

You can find an introduction to the commissioning tool STARTER in this Manual in the section "Commissioning tool STARTER" or in the /IH2/ CANopen Commissioning Manual.

4.1.2 Previous knowledge

To fully understand this Commissioning Chapter on the CANopen interface, you must be familiar with CANopen terminology.

This Chapter includes, among other things,

- An overview of the most important terms and abbreviations
- A breakdown of the communication objects in the CANopen object directory in the CANopen slave software

You must be familiar with the following standards:

Note

SINAMICS with CANopen complies with the following standards:

- CiA DS-301 V4.02 (Application Layer and Communication Profile)

- CiA DS-402 V2.0 (Device Profile for Drives and Motion Control)

- CiA DR-303-3 V1.2 (Indicator Specification)

- CiA DS-306 V1.3: (Electronic data sheet specification for CANopen)

4.1.3 Prerequisites for commissioning CU305 with CANopen

To commission a CAN bus in a SINAMICS drive line-up,

the following hardware and software components are required:

- CU305 CAN with firmware in the non-volatile memory.
- Link between the CANopen Control Unit and a PC/programming device with an RS232 connection.
- The STARTER commissioning tool is installed on your PC/PG.

Note

Please see the SINAMICS S110 Equipment Manual for descriptions of the components of a SINAMICS drive line-up as well as for information about wiring, the interface to a PC/programming device, and the installation of the STARTER commissioning tool.

4.1.4 CAN bus on the CU305

The integrated CAN interface is used to connect drives in the SINAMICS S110 drive system to higher-level automation systems with a CAN bus.

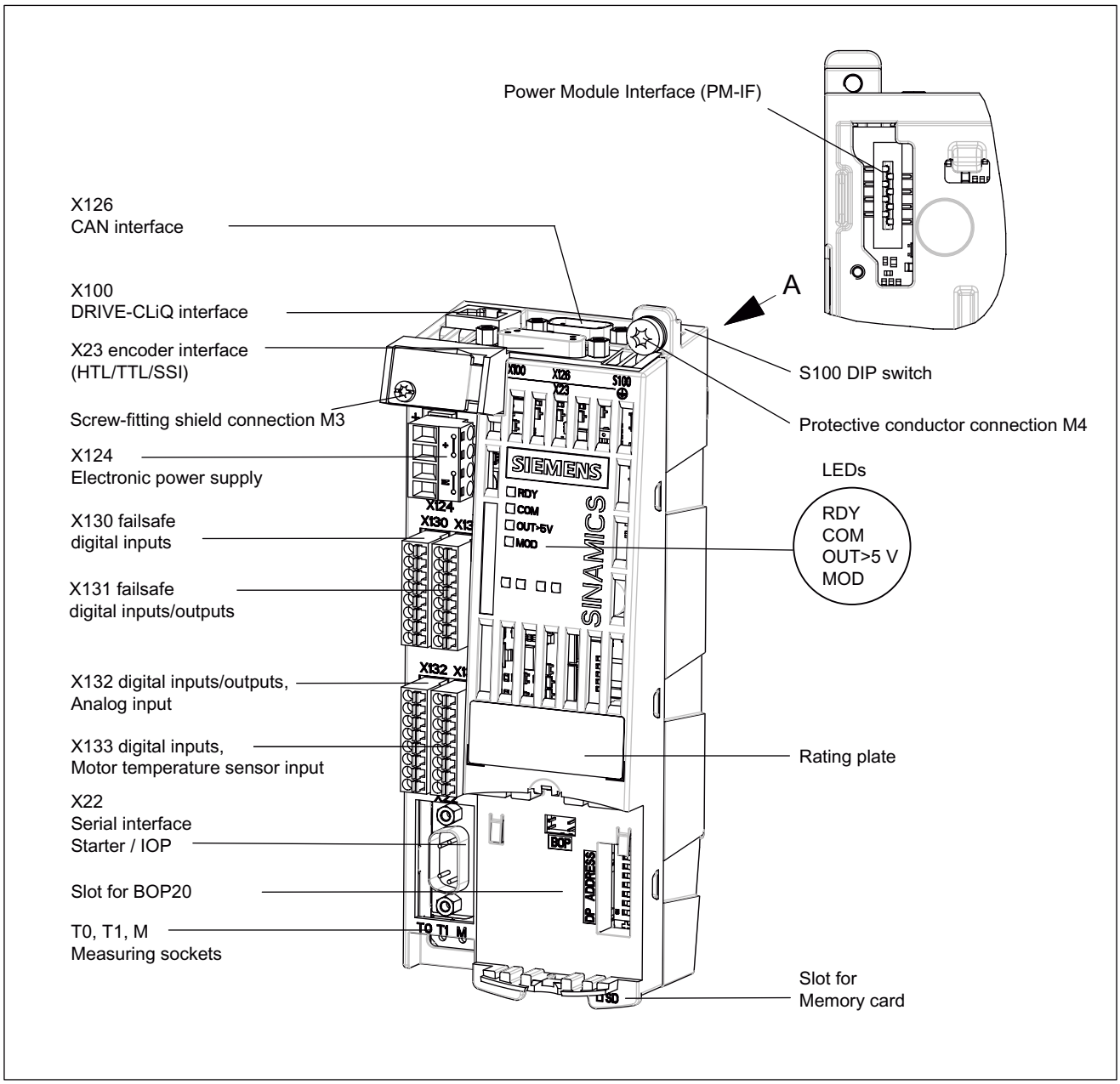

Figure 4-1 View of the CU305 CAN

The CU305 CAN uses 9-pin Sub D X126 connectors for the connection to the CAN bus system.

⚠ WARNING
Do NOT connect a PROFIBUS cable Connecting a PROFIBUS cable to CAN connector X126 is highly likely to damage the CANopen interface of the CU305 beyond repair.

The connector can be used as an input or an output. Unused pins are plated through.

The following baud rates (among others) are supported: 10, 20, 50, 125, 250, 500, 800 kBaud, and 1 MBaud.

The PC with STARTER is connected to serial interface X22 (RS232).

4.1.5 CAN bus interface X126

Connector assignment of the CANopen interface X126 on S110

Table 4- 1 CAN bus interface X126

	Pin	Designation	Technical specifications
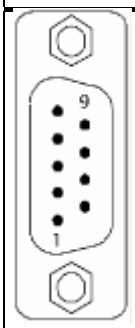	1	Reserved	
	2	CAN_L	CAN signal (dominant low)
	3	CAN_GND	CAN ground
	4	Reserved	
	5	CAN_SHLD	Optional shield
	6	GND	CAN ground
	7	CAN_H	CAN signal
	8	Reserved	
	9	Reserved	
Type: 9-pin SUB-D male			

4.1.6 CANopen functionality CU305 CAN

Introduction

The CU305 CAN supports the CANopen transfer types with SDOs (service data objects) and PDOs (process data objects).

The CU305 CAN also supports free PDO mapping.

The CU305 CAN supports CANopen communication profile DS 301 version 4.0, device profile DSP 402 (drives and motion control) version 2.0, and indicator profile DR303-3 version 1.0.

For communication monitoring purposes, the CU305 CAN supports node guarding and the heartbeat protocol (heartbeat producer).

The CU305 CAN features an SDO->parameter channel that can be used to read or write all the SINAMICS parameters.

The CU305 CAN firmware supports Profile Velocity Mode.

Node guarding

SINAMICS waits a certain time (node lifetime) for message frames from the master application and permits a specific number (lifetime factor) of failures within a specified time interval (node guard time).

The node lifetime is calculated by multiplying the node guard time by the lifetime factor.

Heartbeat protocol

SINAMICS (producer) cyclically transmits (heartbeat time) its communication status (sign of life) on the CAN bus to the master application.

Profile velocity mode

Velocity setpoint defaults and settings can be made in this mode.

4.1.7 Diagnostics LED "COM"

COM diagnostics LED -> red

Table 4- 2 COM diagnostics LED -> red (CANopen error LED)

ERROR LED flashing frequency	Status	Meaning
Off	No error	Ready
Single flash	Warning limit reached	At least one of the CAN controller error counters has reached the "Error Passive" warning threshold (too many telegrams with errors).
Double flash	Error control event	A guard event has occurred.
On	Bus off	The CAN controller is in "Bus off".

COM diagnostics LED -> green

Table 4- 3 COM diagnostics LED -> green (CANopen RUN LED)

ERROR LED flashing frequency	Status	Meaning
Single flash	Stopped	The node is in the STOPPED state.
Flashing	PRE-OPERATIONAL	The node is in the PRE-OPERATIONAL state.
On	OPERATIONAL	The node is in the OPERATIONAL state.

4.2 Commissioning

4.2.1 Procedure when commissioning the drive for the first time

Section content

This section shows you how to carry out initial commissioning for the CANopen interface in the SINAMICS drive line-up using the STARTER commissioning tool. This section first looks at the main steps in the initial commissioning procedure. The initial commissioning procedure described here takes place with STARTER in ONLINE mode. At the end of each step, notes are included (if necessary) to explain how the procedure differs in OFFLINE mode.

Prerequisite

Before you start to follow the steps described in this section for commissioning, you must have read the section titled "Requirements for commissioning".

4.2.2 CANopen object directory

CANopen object directory

When the drive objects are initialized,

the CANopen objects are initialized in the object directory of the SINAMICS drive line-up (CANopen slave software).

Objects

The following SINAMICS objects are involved in communication:

1. Control Unit communication objects independent of the drive
   – include: Number and number of errors, communication addresses etc.
2. Drive-dependent communication objects
   – Up to eight PDOs for sending and eight PDOs for receiving can be parameterized for the drive. Each PDO contains:
     - Communication and
     - mapping parameters (max. 8 bytes/4 words/64 bits)
3. Manufacturer-specific objects
   – Objects to access SINAMICS parameters.
   – Free objects for sending/receiving process data, there are freely interconnectable objects available for each drive object (max. 16) in the object directory (see CANopen Manual for table).
   – The manufacturer-specific range starts in the object directory from address 2000 hex and ends at 5FFF hex.
4. Drive objects in drive profile DSP 402
   – Profile Velocity Mode.
   – Setpoint and actual values and comparisons.

4.2.3 Commissioning options

Prerequisites

You can find explanations of the CANopen terminology and other important technical principles in the Introduction chapter in the CANopen Manual.

Commissioning

This section describes the commissioning prerequisites:

- SINAMICS S110: CU305 CAN
- STARTER commissioning tool

Note

All CANopen parameters, errors and warnings are described in the List Manual.

SINAMICS S110 on a CANopen interface

There are two ways of putting SINAMICS S110 into operation with the STARTER tool on a CANopen interface.

- Via predefined message frames ("predefined connection set").
- Via free PDO mapping (user-defined message frames)

4.2.4 Configuring the drive unit with STARTER (overview)

Initial commissioning: procedure

In the table below, the current commissioning step is highlighted in **bold**:

Table 4- 4 CANopen initial commissioning

Step	Procedure
1	Hardware settings on the CU305
2	Configure the drive unit using the STARTER commissioning tool in ONLINE mode.
3	Configure the COB IDs and process data objects for the receive and transmit message frames.
4	Interconnect the receive and transmit buffers.
5	In ONLINE mode, load the projects from the drive unit to the PC/PG and save.

Carrying out the commissioning step

Configure the drive unit in STARTER by carrying out the following steps:

- Search for the drive unit ONLINE.
- Enter the drive configuration data.
- Configure the motor.
- Configure the CANopen interface on the CU305 Control Unit
  - CAN interface
  - Monitoring
- Load the project to the drive unit.

Note

When carrying out these steps, see the SINAMICS CANopen Interface Commissioning Manual.

4.2.5 Searching for the drive unit ONLINE

Introduction

The SINAMICS firmware is able to detect the connected drives automatically, as well as set and save the corresponding parameters.

Steps

To ensure that the drive unit configuration is identified automatically, open a new project in STARTER: Proceed as follows:

1. To launch the STARTER commissioning tool, click the STARTER icon or select the menu command **Start > Programs > STARTER > STARTER** in the Windows start menu. The STARTER project assistant is launched.
2. Choose **Find drive units online....**

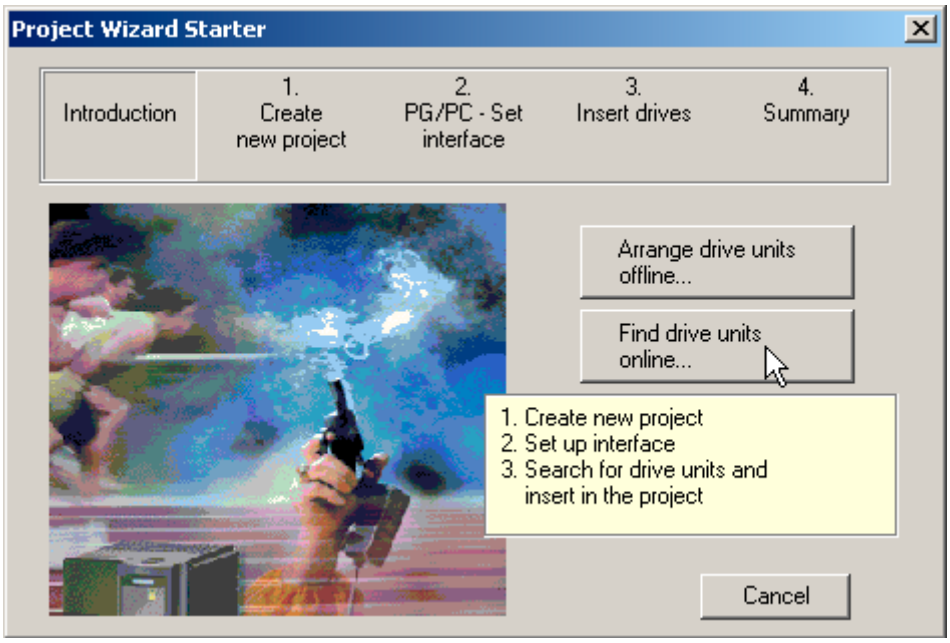

Figure 4-2 Find drive units online...

3. The Wizard guides you through the procedure for creating a new project. In the next dialog box, enter a name for the project e.g. **Project_CANopen_0** and click **Continue >**.

4. The Project Wizard searches for the drive unit ONLINE and inserts it in the project. Click **Continue >**. The Wizard displays a summary of the project.
5. Choose **Complete**. The new project and drive unit are displayed in STARTER.

Note

The system searches for drive units or, more precisely, Control Units; in other words, if more than one Control Unit exists in the system, more than one drive unit is found. The peripherals associated with a drive unit (Control Unit, etc.) are not yet displayed at this point. They do not appear until **automatic configuration** is carried out.

4.2.6 Configuring a drive unit

Introduction

You have proceeded as described above and integrated the drive unit into the STARTER project automatically.

Note

In the case of connection via an SMI, this step is not required (the motor is configured automatically).

Steps

Proceed as follows to configure the CANopen interface, the motor, and the encoder for the drive.

Note

You only have to change the motor and encoder configuration;

1. Choose **Disconnect from target system...**. The modified data is loaded from RAM to ROM and to the PG.
   The motors are configured in OFFLINE mode and are then loaded to the target system in ONLINE mode.
2. During first commissioning, double-click **Configure drive unit** in the project navigator (see the example screen below). Once first commissioning is complete, you will find the CANopen interface configuration under **Control Unit** → **Configuration** → **Wizard** button.

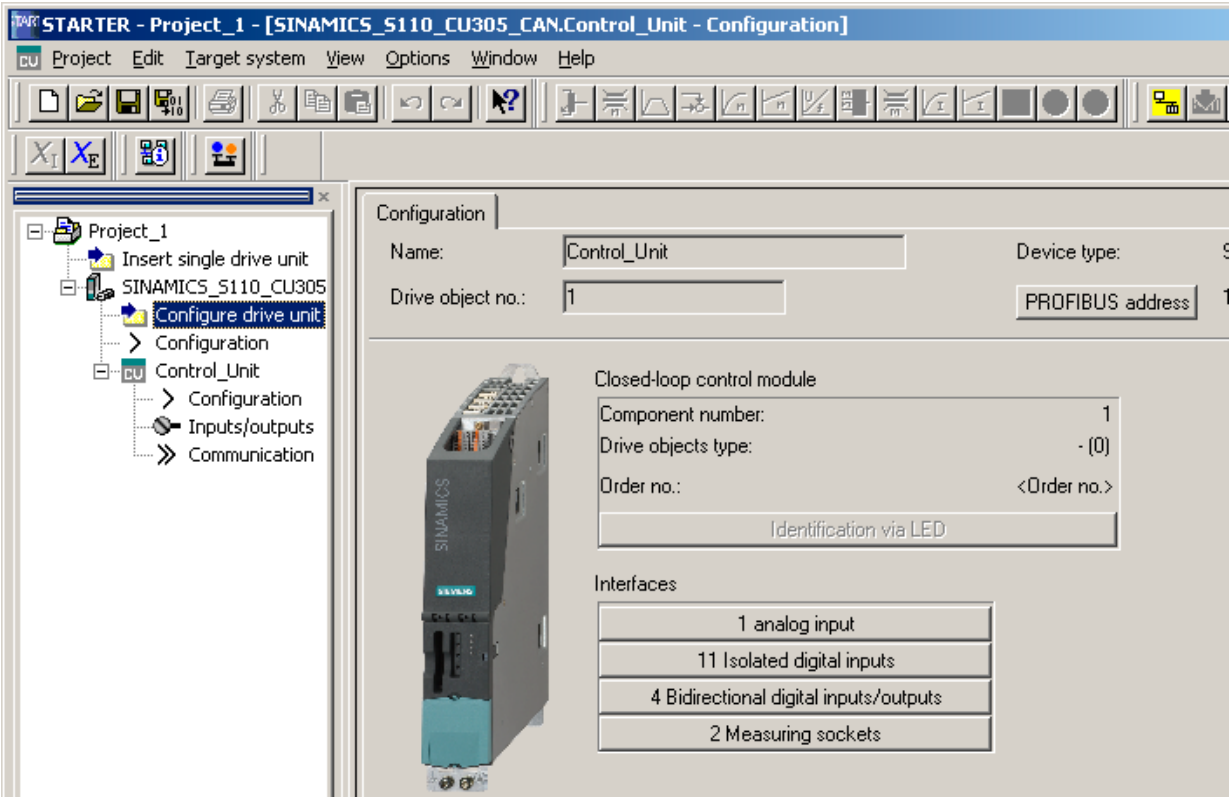

Figure 4-3 Configuring a drive

3. Enter the transmission rate and the CAN bus address/node ID in the **Configuration - <Project name> - CAN interface** dialog box.

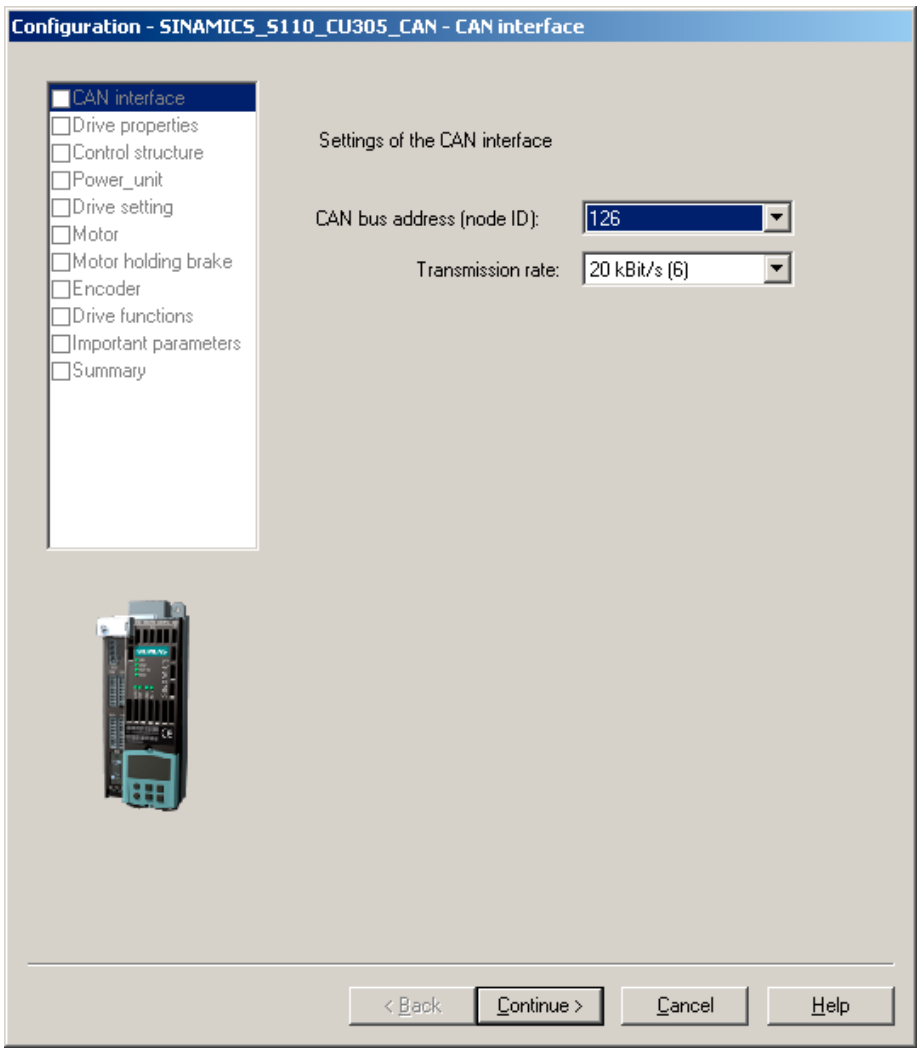

Figure 4-4 CAN interface

4. You can select a transmission rate of **1 MBit/s** for commissioning, for example.
   The factory setting is 20 kBit/s.

Note

If, during commissioning, you power down/power up the control or carry out a RESET, the factory settings will be restored.

---

5. There are two possible ways of setting the bus address/node ID:
   – In this dialog box, you can set a value between 1 and 126 if the address switch on the Control Unit (labeled "DP address") is set to 0 or 127.

   Note

   If the address switch is set to between 1 and 126, values that were entered here in OFFLINE mode will not be downloaded.

   – Directly using the address switch on the Control Unit.
   The following diagram shows an example for address **5**.

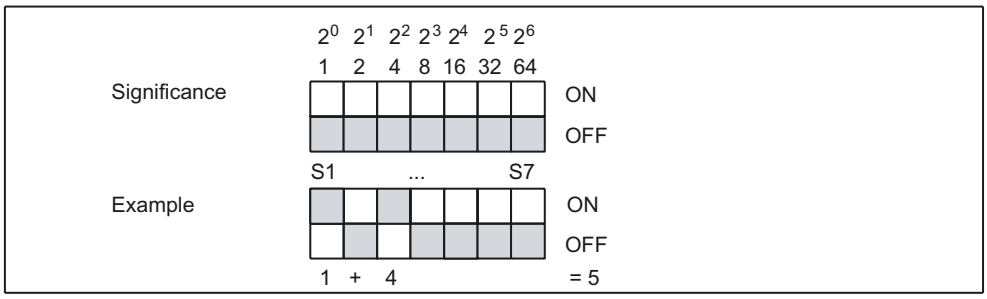

Figure 4-5 Example: Bus address via the address switch on the Control Unit

Compliance with the following instructions is mandatory!

Note

Permissible CAN bus address: 1...126.

The address set on the switch is displayed in **p8620.0**.

If the switch setting changes, the new setting will not be applied until the next POWER ON.

The factory setting is "ON" or "OFF" for all switches.

During SINAMICS power up the address switch is polled first in order that the bus address can be set. If the switch setting is 0 or 127, the address can be set via parameter **p8620.0**.

If the address is set to a valid node address (1...126), this is copied to parameter **p8620.0**, where it is displayed. Click **Next >**.

6. During first commissioning, you will need to enter a name for the drive in the **Drive properties** dialog box. Click **Next >**. Once first commissioning is complete, you will find the drive configuration under **Drive_1** → **Configuration** → **Configure DDS** button.

7. On the dialog screen which appears when you select this command path ("SINAMICS_S110_CU305_CAN configuration - Control structure"), you can define whether the drive object (function module) is to operate with/without an extended setpoint channel. The commissioning procedure described here is carried out **without** an extended setpoint channel (ramp-function generator). The field for the extended setpoint channel must be clicked-out.

Note

When the ramp-function generator is activated (with setpoint channel), the interconnection from CI: p2151 = r1119 can be changed, so that to evaluate bit 10 in status word (r8784) the setpoint can be retrieved (taken) from in front of the ramp-function generator.

When the ramp-function generator is active, objects 6086 hex and 6083 hex of the drive provide are included.

---

8. You only configure the motor and the encoder! Work through the Wizard by choosing **Continue >** until you reach the point at which you configure the motor (see the following diagram).

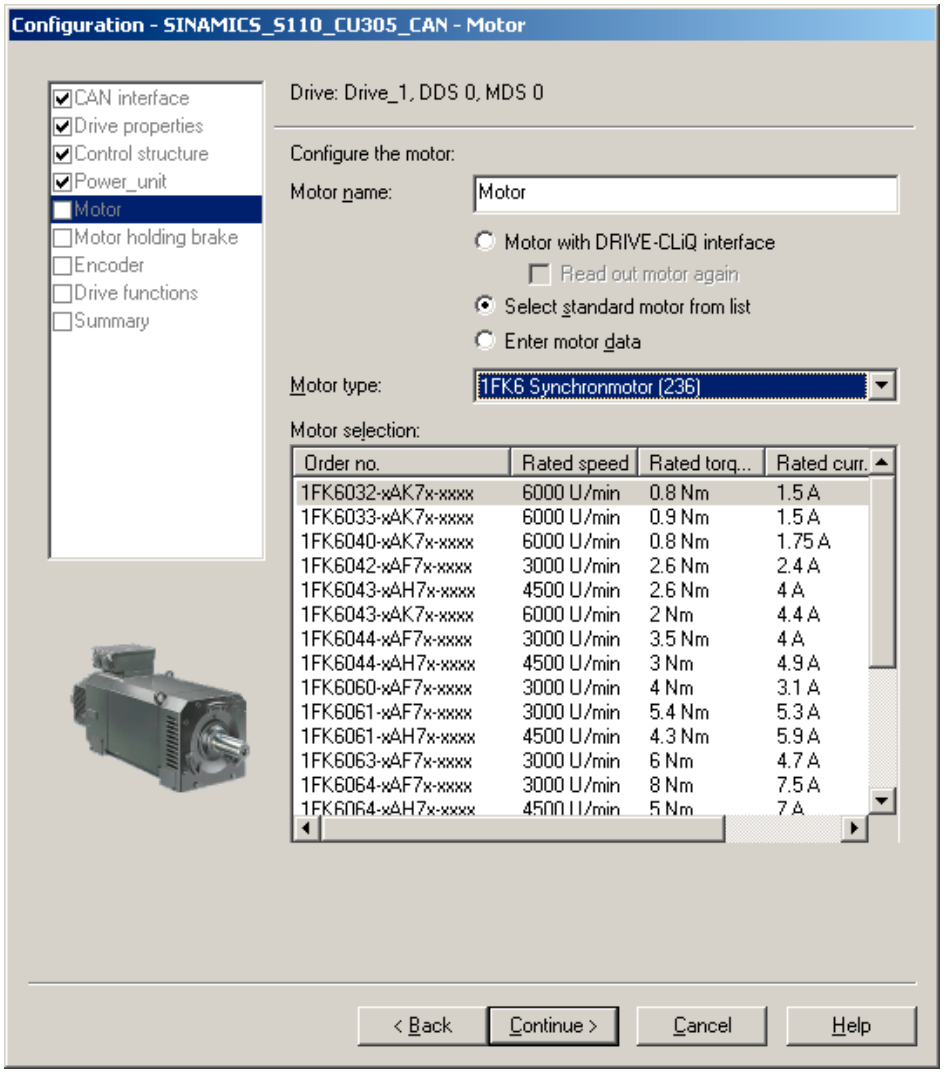

Figure 4-6 Configure the motor

9. Choose the motor type and the motor according to the type (order no.) (see the rating plate).
10. Click **Continue >** until you reach the point at which you configure the encoder.
11. Select the motor encoder and click **Next >** to run the wizard through to the dialog containing the summary.
12. Click **Complete**.

This completes the OFFLINE configuration of the drive unit.

4.2.7 CAN settings

4.2.7.1 Monitoring

Introduction

SINAMICS supports the following two optional monitoring services to ensure the functionality of CANopen network nodes:

- Heartbeat:
  SINAMICS (producer) cyclically transmits (heartbeat time) its communication status on the CAN bus to the master application.
- Node guarding:
  SINAMICS waits a certain time (node lifetime) for master frames from the master application and permits a specific number (lifetime factor) of failures within a specified time interval (node guard time).
  The node lifetime is calculated by multiplying the node guard time by the lifetime factor.

Note

Only one node monitoring service can be activated at any one time (either heartbeat or node guarding).

If both monitoring services are activated, node guarding is effective.

Steps

On the **Monitoring** tab, enter the required monitoring service (heartbeat or node guarding).

1. Select the **Monitoring** tab.
2. The default commissioning value for the **Heartbeat** monitoring mechanism could be, for example, **100 ms**. Enter this value (unless it has already been entered).
3. The default commissioning values for the **node guarding** monitoring service could be:
   - Time interval (guard time): **100 ms**
   - Number of failures (lifetime factor): **3**
     Enter these values (unless they have already been entered).

The CANopen interface is now parameterized. To load the project to the target system in ONLINE mode, carry out the following steps.

Note

Parameter **p8609** determines how the drive or CAN node will respond in the event of a CAN communication or device error.

Factory setting:

p8609 = 1, => no change

Parameter p8609

Sets the behavior of the CAN node referred to the communications error or equipment fault.

- Values:
  - 0: Pre-operational
  - 1: No change
  - 2: Stopped
- Index (corresponds to the CANopen object 1029 hex):
  - [0] = Behavior for communication errors
  - [1] = Behavior for device faults

4.2.8 Loading the project to the drive unit

Introduction

To load the project to the drive unit, proceed as follows:

Steps

1. Click **Connect to target system**. An ONLINE connection is established and an ONLINE/OFFLINE comparison takes place. If any discrepancies are identified, they are displayed (see screenshot below).

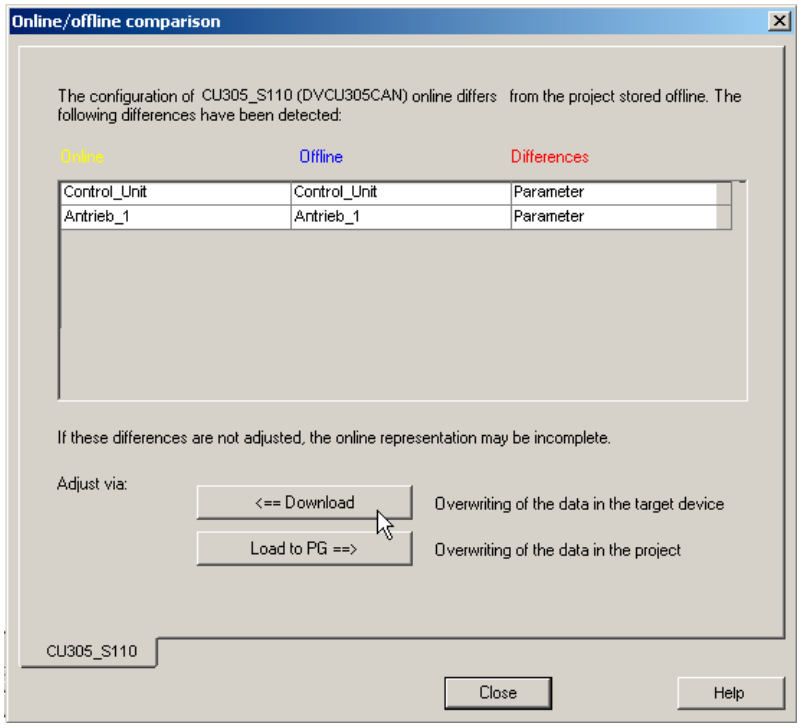

Figure 4-7 ONLINE/OFFLINE comparison (example)

2. You changed the data OFFLINE and now have to load it to the target system. Carry out the following:
   - **<-- Download** in the "ONLINE/OFFLINE comparison" dialog box
   - When the system asks "Are you sure?", click **Yes**. The system now starts loading the data.
   - When the system informs you that the data was successfully loaded to the target system, click **OK**.
   - Click **OK** for "Load from RAM to ROM".
3. Discrepancies were identified again during the ONLINE/OFFLINE comparison. Now click **Load to programming device -->**.
4. Load the new data from the drive unit to the PG. Carry out the following:
   - When the system asks "Are you sure?", click **Yes**. The system now starts loading the data.
   - When the system informs you that the data was successfully loaded to the PG, click **OK**.
5. As no more discrepancies are showing on the ONLINE/OFFLINE comparison dialog screen, you can click **Close**.

This completes the procedure for configuring the drive unit hardware with the CANopen interface.

4.3 Configuring COB-IDs and process data objects

4.3.1 Configuring COB-IDs and process data

Configuring COB-IDs and process data

For more information about this subject please see the CANopen Commissioning Manual (COB-IDS and process data objects associated with receive and transmit telegrams).

4.4 Interconnecting process data

4.4.1 Interconnecting process data

Interconnecting process data

For more information about this subject please see the chapter titled Interconnecting process data in the receive and send buffers in the CANopen Commissioning Manual.

4.5 Loading and managing projects ONLINE

4.5.1 Load the projects from the drive unit to the PC/PG in ONLINE mode and save them

Prerequisite

You are in ONLINE mode in STARTER and have completed the initial commissioning procedure.

Steps

To store the data configured ONLINE in the STARTER project on the PG/PC, proceed as follows:

1. Select the drive unit in the project navigator. Select **Target device > Load to programming device** from the context menu (right-click to open).
2. Carry out the following:
   - When the system asks "Are you sure?", click **Yes**. The system now starts loading the data.
   - When the system informs you that the data was successfully loaded, click **OK**.
3. Click the **Disconnect from target system** function key.
4. If prompts are displayed, then click on the following one after the other:
   - **Changes in the drive unit...**
   - **Save data,** for SERVO_1
   - When the system informs you that the data was successfully copied from RAM to ROM, click **OK**.
   - When the system prompts you to confirm that you want the data to be loaded to the PG, click **Yes**.
   - When the system informs you that the data was successfully loaded to the PG, click **OK**.
5. STARTER is in OFFLINE mode.
6. Click **Project > Save as...**

This completes initial commissioning for the CANopen interface.

Diagnostics 5

This chapter describes the following diagnostic features of the SINAMICS S drive system:

- Diagnostics via LEDs
- Diagnostics via STARTER
- Diagnostic buffer
- Fault and alarm messages

5.1 Diagnostics via LEDs

5.1.1 LEDs when the Control Unit is booted

The individual statuses during the booting procedure are indicated by means of the LEDs on the Control Unit.

- The duration of the individual statuses varies.
- If an error occurs, booting is aborted and the cause of the error is indicated via the LEDs. **Remedy:** Exchange the Control Unit.
- Once the unit has been successfully booted, all the LEDs are switched off briefly.
- Once the unit has been booted, the LEDs are driven via the loaded software.

  The description of the LEDs after booting applies.

Control Unit 305 - behavior of the LEDs during booting

Table 5- 1 LEDs during power up

LED				Status	Remark
RDY	COM	OUT>5	MOD		
orange	orange	red	off	Reset	–
red	red	off	off	BIOS loaded	–
red 2 Hz	red	off	off	BIOS error	–
red	off	off	off	firmware loaded	–
red 2 Hz	red 2 Hz	off	off	file error	problem with file system
off	red	off	off	firmware checked	no CRC errors
red 0.5 Hz	red 0.5 Hz	off	off	firmware checked	CRC error
orange	off	off	off	drive initialization	

5.1.2 LEDs after the Control Unit CU305 has booted

Table 5- 2 Control Unit CU305 – description of the LEDs after booting

LED	Color	Status	Description, cause	Remedy
RDY (READY)	-	off	Electronics power supply is missing or outside permissible tolerance range.	-
	Green	Continuous	The component is ready and cyclic DRIVE-CLiQ communication takes place or the Control Unit waits for initial commissioning.	-
		Flashing 2 Hz	Writing to the memory card[1)]	-
	Red	Continuous	At least one fault is present in this component.	Remedy and acknowledge fault
		Flashing 2 Hz	Boot error	Replace Control Unit. Carry-out a POWER ON.
	Green/ Red	Flashing 0.5 Hz	Control Unit CU305 is ready for operation. However there are no software licenses.	Obtain licenses.
	Orange	Continuous	DRIVE-CLiQ communication is being established.	-
		Flashing 0.5 Hz	Updating the firmware of the DRIVE-CLiQ components.	-
		Flashing 2 Hz	Firmware update is complete for components. Wait for POWER ON for the components in question.	Turn POWER ON for the components in question
	Green/ orange or red/ orange	Flashing 1 Hz	Component detection via LED is activated (p0124[0]). Note: Both options depend on the LED status when component recognition is activated via p0124[0] = 1.	-
COM PROFIdrive cyclic operation/ CU305 DP	-	off	Cyclic communication has not (yet) taken place. Note: The PROFIdrive is ready to communicate when the Control Unit is ready to operate (see LED RDY).	-
	Green	Continuous	Cyclic communication is taking place.	-
		Flashing 0.5 Hz	Cyclic communication is not yet running fully. Possible reasons: • The controller is not transferring any setpoints. • During isochronous operation, no global control (GC) or a faulty global control (GC) is transferred by the controller.	-
	Red	Continuous	Cyclic communication has been interrupted.	Remedy fault

LED	Color	Status	Description, cause	Remedy
	Orange	Flashing 2 Hz	Firmware CRC error.	Make sure that the memory card has been inserted properly. [1)] Replace the memory card. [1)] Replace Control Unit. Carry-out a POWER ON.
COM/ CU305 CAN	-	off	Cyclic communication has not (yet) taken place. **Note:** The CAN is ready to communicate when the Control Unit is ready to operate (see LED RDY).	-
	Green	Continuous	Cyclic communication is taking place.	-
		Flashing 0.5 Hz	Cyclic communication is not yet running fully. Possible reasons: • The controller is not transferring any setpoints. • During isochronous operation, no global control (GC) or a faulty global control (GC) is transferred by the controller.	-
	Red	Continuous	Cyclic communication has been interrupted.	Remedy fault
	Orange	Flashing 2 Hz	Firmware CRC error.	Make sure that the memory card has been inserted properly. [1)] Replace the memory card. [1)] Replace Control Unit. Carry-out a POWER ON.
OUT>5 V	-	off	The voltage of the electronics power supply for the measuring system is 5 V.	-
	Orange	Continuous	The voltage of the electronics power supply for the measuring system is 24 V. **Important:** Make sure that the connected encoder can be operated with a 24 V power supply. If an encoder that is designed for a 5 V supply is operated with a 24 V supply, this can destroy the encoder electronics.	-
MOD	-	off	Reserved	-

[1)] This option is only valid if an optional memory card is inserted.

5.1.3 Sensor Module Cabinet SMC10 / SMC20

Table 5- 3 Sensor Module Cabinet 10 / 20 (SMC10 / SMC20) – description of the LEDs

LED	Color	Status	Description, cause	Remedy
RDY READY	-	off	Electronics power supply is missing or outside permissible tolerance range.	–
	Green	Continuous	The component is ready for operation and cyclic DRIVE-CLiQ communication is taking place.	–
	Orange	Continuous	DRIVE-CLiQ communication is being established.	–
	Red	Continuous	At least one fault is present in this component. Note: LED is driven irrespective of the corresponding messages being reconfigured.	Remedy and acknowledge fault
	Green/red	0.5 Hz flashing light	Firmware is being downloaded.	–
		2 Hz flashing light	Firmware download is complete. Wait for POWER ON	Carry out a POWER ON
	Green/orange or Red/orange	Flashing light	Component recognition via LED is activated (p0144) Note: Both options depend on the LED status when component recognition is activated via p0144 = 1.	–

5.1.4 SMC30 Sensor Module Cabinet

Table 5- 4 Sensor Module Cabinet SMC30 – description of the LEDs

LED	Color	State	Description, cause	Remedy
RDY READY	-	Off	Electronics power supply is missing or outside permissible tolerance range.	–
	Green	Continuous light	The component is ready for operation and cyclic DRIVE-CLiQ communication is taking place.	–
	Orange	Continuous light	DRIVE-CLiQ communication is being established.	–
	Red	Continuous light	At least one fault is present in this component. Note: The LED is activated regardless of whether the corresponding messages have been reconfigured.	Remedy and acknowledge fault
	Green/red	Flashing, 0.5 Hz	Firmware is being downloaded.	–
	Green/red	Flashing, 2 Hz	Firmware download is complete. Wait for POWER ON.	Carry out a POWER ON
	Green/orange or Red/orange	Flashing	Component recognition via LED is activated (p0144). Note: Both options depend on the LED status when component recognition is activated via p0144 = 1.	–
OUT > 5 V	-	Off	Electronics power supply is missing or outside permissible tolerance range. Power supply ≤ 5 V.	–
	Orange	Continuous light	Electronics power supply for encoder system available. Power supply > 5 V. Important: Make sure that the connected encoder can be operated with a 24 V power supply. If an encoder that is designed for a 5 V supply is operated with a 24 V supply, this can destroy the encoder electronics.	–

5.2 Diagnostics via STARTER

Description

The diagnostic functions support commissioning and service personnel during commissioning, troubleshooting, diagnostics and service activities.

General information

Prerequisites: Online operation of STARTER.

The following diagnostic functions are available in STARTER:

- Specifying signals with the ramp-function generator
- Signal recording with the trace function
- Analyzing the control response with the measuring function
- Outputting voltage signals for external measuring devices via test sockets

5.2.1 Function generator

Description

The ramp-function generator can be used, for example, for the following tasks:

- To measure and optimize control loops.
- To compare the dynamic response of coupled drives.
- To specify a simple traversing profile without a traversing program.

The ramp-function generator can be used to generate different signal shapes.

In the connector output operating mode (r4818), the output signal can be injected into the control loop via the BICO interconnection.

Depending on the mode set, this setpoint can also be applied to the control structure as, for example, a current setpoint, disturbing torque, or speed setpoint. The impact of superimposed control loops is automatically suppressed.

Parameterizing and operating the ramp-function generator

The ramp-function generator is parameterized and operated via the parameterization and commissioning tool STARTER.

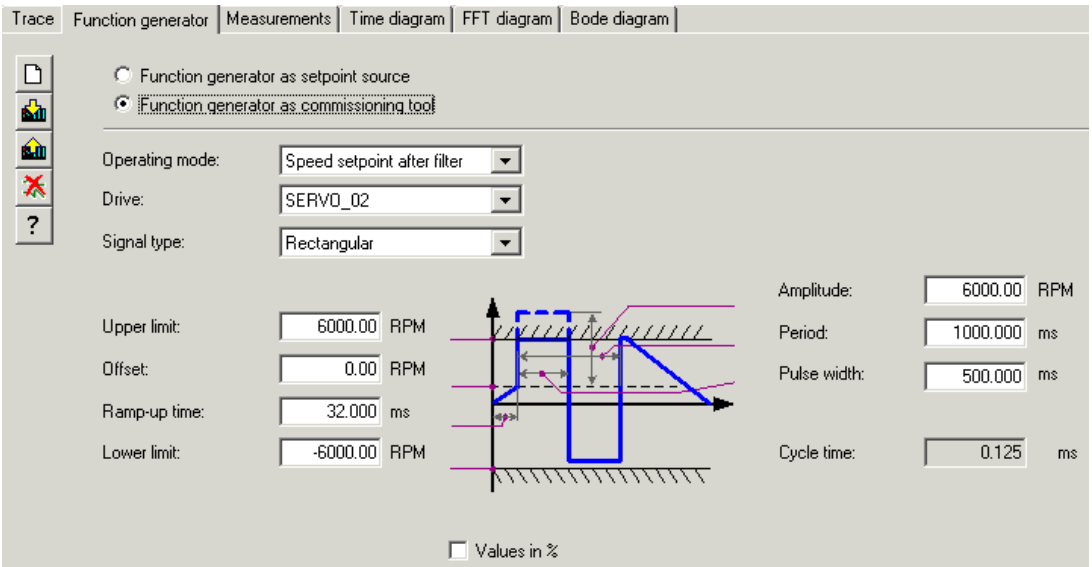

Figure 5-1 "Ramp-function generator" initial screen

Note

Please see the online help for more information about parameterizing and operation.

Properties

- Concurrent injection to several drives possible.
- The following parameterizable signal shapes can be set:
  - Square-wave
  - Staircase
  - Triangular
  - PRBS (pseudo random binary signal, white noise)
  - Sinusoidal
- An offset is possible for each signal. The ramp-up to the offset is parameterizable. Signal generation begins after the ramp-up to the offset.

- Restriction of the output signal to the minimum and maximum value settable.
- Operating modes of the function generator
  - Connector output
  - Current setpoint downstream of filter (current setpoint filter)
  - Disturbing torque (downstream of current setpoint filter)
  - Speed setpoint downstream of filter (speed setpoint filter)
  - Current setpoint upstream of filter (current setpoint filter)
  - Speed setpoint upstream of filter (speed setpoint filter)

Injection points of the ramp-function generator

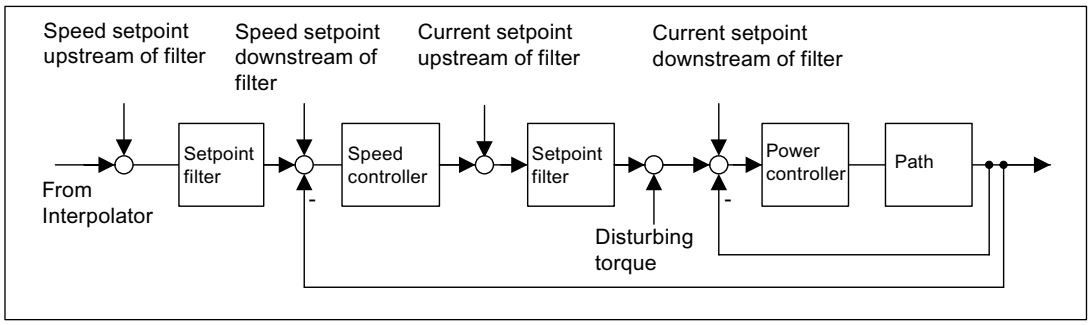

Figure 5-2 Injection points of the ramp-function generator

Further signal shapes

Further signal shapes can be parameterized.

Example:

The "triangular" signal form can be parameterized with "upper limitation" to produce a triangle with no peak.

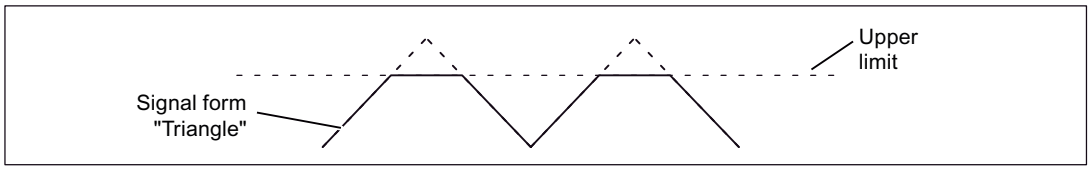

Figure 5-3 "Triangular" signal without peak

Starting/stopping the ramp-function generator

Note

With the corresponding ramp-function generator parameter settings (e.g. offset), the motor can "drift" and travel to its end stop.

The movement of the drive is not monitored while the ramp-function generator is active.

To start the ramp-function generator:

1. Meet the conditions for starting the ramp-function generator
   - Activate the control panel

     Drive_1 –> Commissioning –> Control panel
   - Switch on the drive

     Control panel –> Activate enable signals –> Switch on
2. Select the operating mode

   e.g. speed setpoint downstream of filter
3. Set the signal shape

   e.g. square-wave
4. Load the settings to the target system ("Download parameterization" button)
5. Start the ramp-function generator ("Start FctGen" button)

To stop the measuring function:

- "Stop FctGen" button

Parameterization

The "function generator" parameter screen is selected via the following icon in the toolbar of the STARTER commissioning tool:

Figure 5-4 STARTER icon for "trace function/ramp-function generator"

5.2.2 Trace function

Description

The trace function can be used to record measured values over a defined period depending on trigger conditions.

Call to the trace function

The "Trace" parameter screen is selected via the following icon in the toolbar of the STARTER commissioning tool:

Figure 5-5 STARTER icon for "trace/function generator"

Parameterizing and using the trace function

The trace function is parameterized and operated via the parameterization and commissioning tool STARTER.

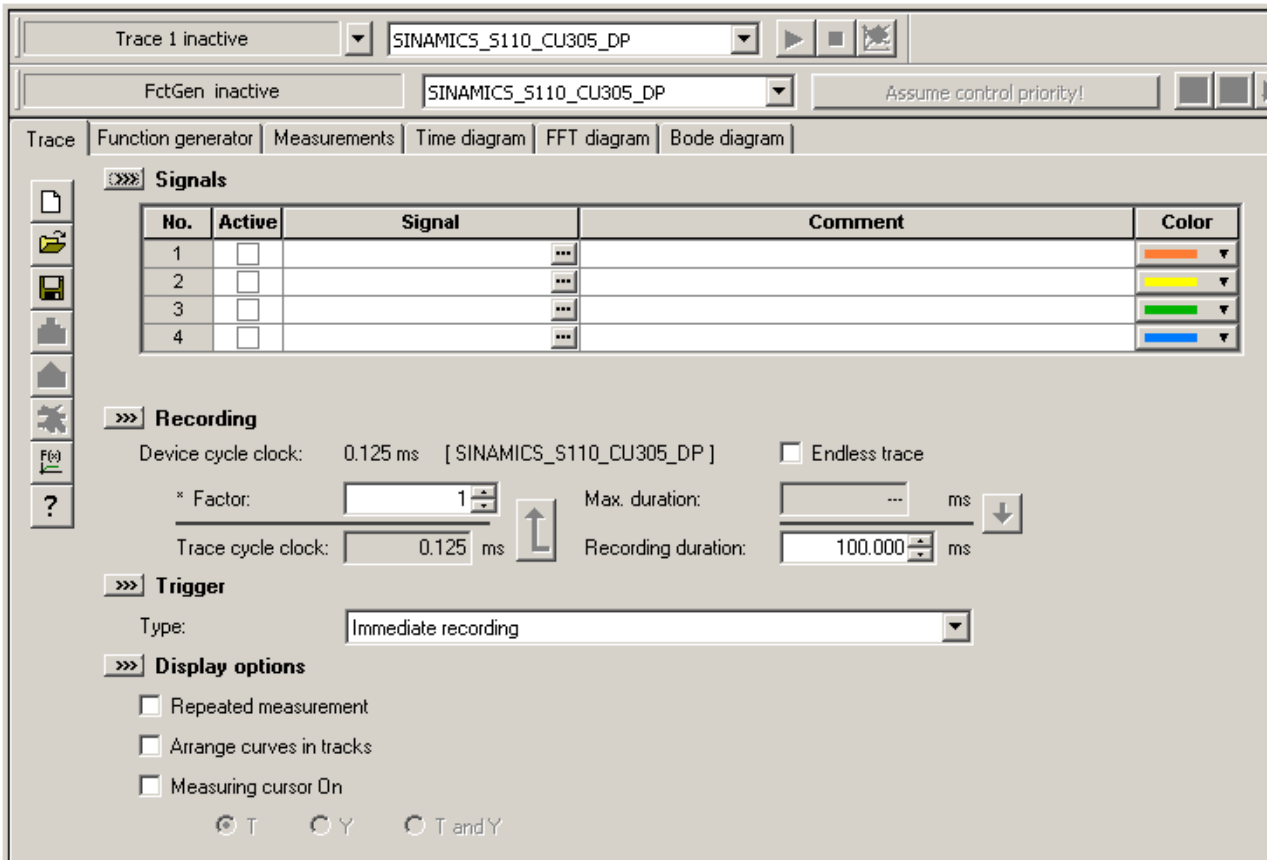

Figure 5-6 Trace function

The unit cycle time display flashes 3 times at around 1 Hz when the time slice is changed from < 4 ms to ≥4 ms (see description under "Properties").

Note

Please see the online help for more information about parameterizing and operation.

Properties

- Up to 4 recording channels per trace.
- Device cycle for individual trace: 0.25 ms
- Two independent trace recorders per Control Unit
  - Endless trace:
    Activate **Ring buffer** to define the recording length more precisely. If the ring buffer is deactivated, the trace records until the available memory space is filled.
  - Device cycle for endless trace: 2 ms
- Trigger:
  - Without triggering (recording immediately after start)
  - Triggering on signal with edge or on level
  - Trigger delay and pretrigger possible
- STARTER parameterization and commissioning tool
  - Automatic or adjustable scaling of display axes
  - Signal measurement via cursor
- Settable trace cycle: Integer multiples of the basic sampling time
  - Averaging of trace values:
    If a float value is recorded with a cycle which is slower than the device cycle, the values recorded will not be averaged.

5.2.3 Measuring function

Description

The measuring function is used for optimizing the drive controller. By parameterizing the measuring function, the impact of superimposed control loops can be suppressed selectively and the dynamic response of the individual drives analyzed. The ramp-function generator and trace function are linked for this purpose. The control loop is supplied with the ramp-function generator signal at a given point (e.g. speed setpoint) and recorded by the trace function at another (e.g. speed actual value). The trace function is parameterized automatically when the measuring function is parameterized. Specific predefined operating modes for the trace function are used for this purpose.

Parameterizing and using the measuring function

The measuring function is parameterized and operated via the parameterization and commissioning tool STARTER.

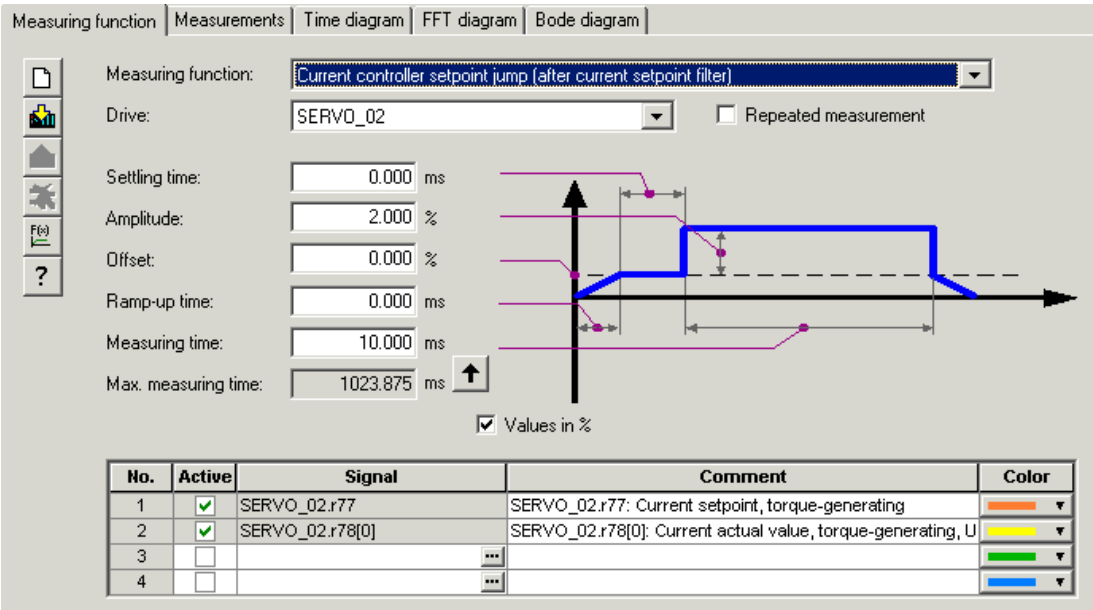

Figure 5-7 "Measuring function" initial screen

Note

Please see the online help for more information about parameterizing and operation.

Properties

- Measuring functions
  - Current controller setpoint change (downstream of the current setpoint filter)
  - Current controller reference frequency response (downstream of the current setpoint filter)
  - Speed controller setpoint change (downstream of the speed setpoint filter)
  - Speed controller disturbance step change (fault downstream of the current setpoint filter)
  - Speed controller reference frequency response (downstream of the speed setpoint filter)
  - Speed controller reference frequency response (upstream of the speed setpoint filter)
  - Speed controller interference frequency response (fault downstream of the current setpoint filter)
  - Speed controller path (excitation downstream of current setpoint filter)

Starting/stopping the measuring function

⚠ CAUTION
With the corresponding measuring function parameter settings (e.g. offset), the motor can "drift" and travel to its end stop. The movement of the drive is not monitored while the measuring function is active.

To start the measuring function:

1. Ensure that the prerequisites for starting the measuring function are fulfilled.
   - Activate the control panel.

     Drive_1 –> Commissioning –> Control panel
   - Switch on the drive.

     Control panel –> Activate enable signals –> Switch on
2. Select the drive (as control panel).
3. Set the measuring function.

   e.g. current controller setpoint change
4. Load the settings to the target system ("Download parameterization" button).
5. Start the ramp-function generator ("Start measuring function" button)

To stop the measuring function:

- "Stop measuring function" button

Parameterization

The "measuring function" parameter screen is selected via the following icon in the toolbar of the STARTER commissioning tool:

Figure 5-8 STARTER icon for "Measuring function"

5.2.4 Measuring sockets

Description

The measuring sockets are used to output analog signals. Any interconnectable signal can be output to any measuring socket on the Control Unit.

CAUTION
The measuring sockets should be used for commissioning and servicing purposes only. The measurements may only be carried out by properly trained specialist personnel.

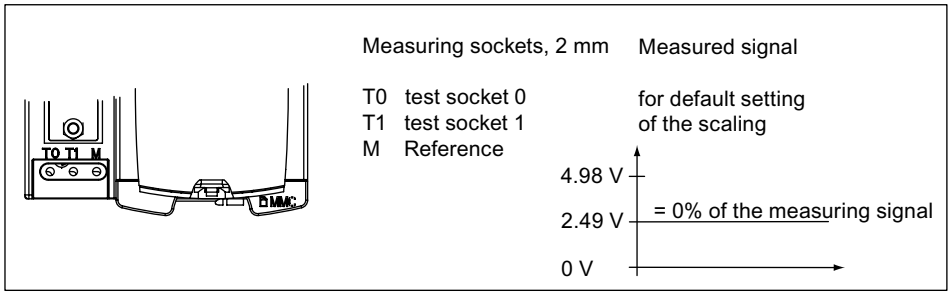

Figure 5-9 Arrangement of the measuring sockets on the Control Unit CU305

Parameterizing and using the measuring sockets

The measuring sockets are parameterized and operated via the STARTER parameterization and commissioning tool.

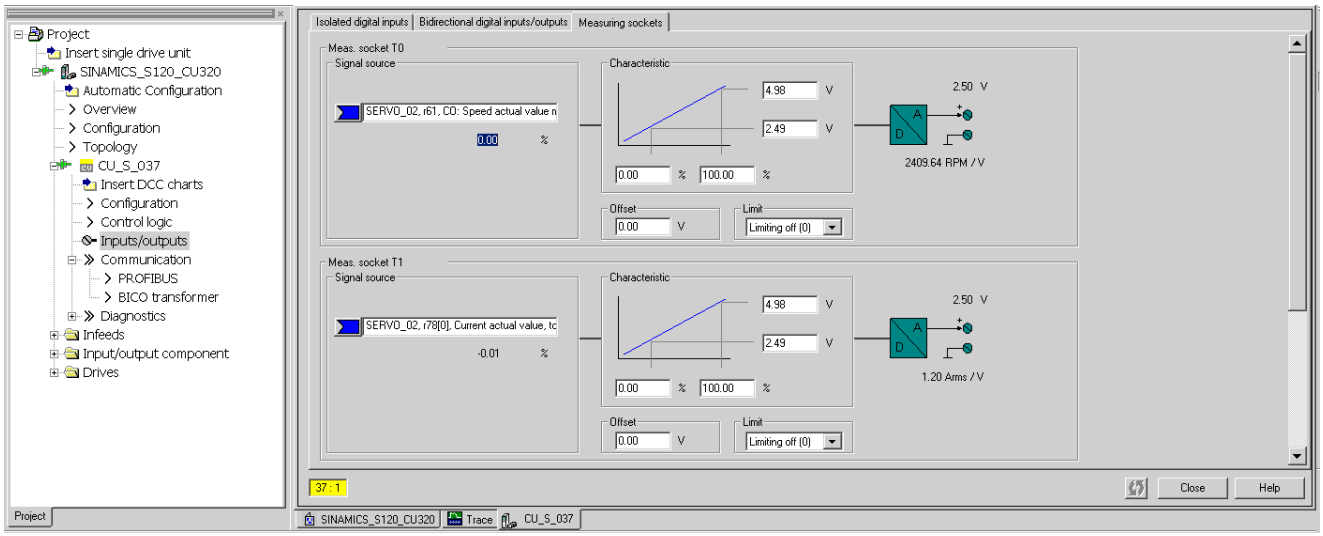

Figure 5-10 "Measuring sockets" initial screen

In the STARTER commissioning tool, select the parameter screen "Measuring sockets" in the project tree under the **CU** in the entry **inputs/outputs** in the tab **Measuring sockets**.

Note

Please see the online help for more information about parameterizing and operation.

Properties

- Resolution — 8-bit
- Voltage range — 0 V to +4.98 V
- Measuring cycle — Depends on the measuring signal (e.g. actual speed value in speed controller cycle 250 µs)

Short-circuit-proof

Parameterizable scaling

Adjustable offset

Adjustable limitation

Signal chart for measuring sockets

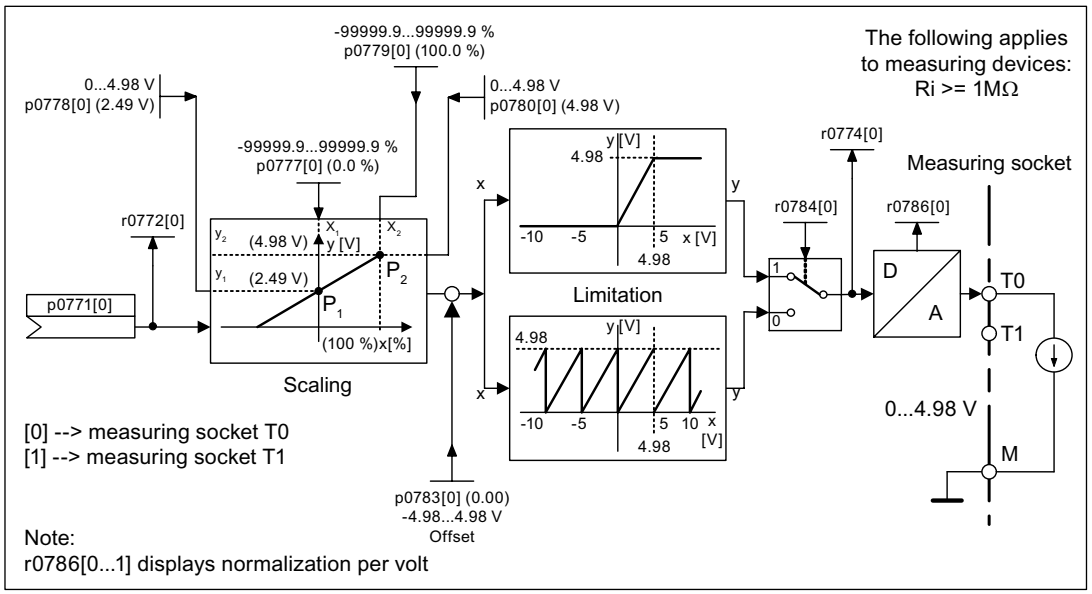

Figure 5-11 Signal chart for measuring sockets

Which signal can be output via measuring sockets?

The signal to be output via a measuring socket is specified by parameterizing the connector input p0771[0...1].

Important measuring signals (examples):

r0060	CO: Speed setpoint before speed setpoint filter
r0063	CO: Actual speed value
r0069[0...2]	CO: Phase currents actual value
r0075	CO: Field-generating current setpoint
r0076	CO: Field-generating actual current
r0077	CO: Torque-generating current setpoint
r0078	CO: Torque-generating actual current

Scaling

Scaling specifies how the measuring signal is processed. A straight line with 2 points must be defined for this purpose.

Example:

x1 / y1 = 0.0% / 2.49 V x2 / y2 = 100.0% / 4.98 V (default setting)

– 0.0% is mapped onto 2.49 V

– 100.0% is mapped onto 0.00 V

Offset

The offset is applied additively to the signal to be output. The signal to be output can thus be displayed within the measuring range.

Limitation

- Limitation On

  If signals are output outside the permissible measuring range, the signal is limited to 4.98 V or to 0V.

- Limitation off

  The output of signals outside the permissible measuring range causes a signal overflow. In the event of an overflow, the signal jumps from 0 V to 4.98 V or from 4.98 to 0 V.

Example of a measurement

Assumption:

The actual speed (r0063) is to be output for a drive via measuring socket T1.

How do you do it?

1. Connect and set the measuring device.
2. Interconnect the signal (e.g. STARTER).

   Interconnect the connector input (CI) belonging to the measuring socket with the desired connector output (CO).

   CI: p0771[1] = CO: r0063
3. Parameterize the signal characteristic (scaling, offset, limitation).

Function diagrams (see SINAMICS S110 List Manual)

- 8134 measuring sockets

Overview of important parameters (see SINAMICS S110 List Manual)

Adjustable parameters

- p0771[0...1] CI: Measuring sockets signal source
- p0777[0...1] Measuring sockets characteristic value x1
- P0778[0...1] Measuring sockets characteristic value y1
- p0779[0...1] Measuring sockets characteristic value x2
- p0780[0...1] Measuring sockets characteristic value y2
- p0783[0...1] Measuring sockets offset
- p0784[0...1] Measuring sockets limit on/off

Display parameters

- r0772[0...1] Measuring sockets output signal
- r0774[0...1] Measuring sockets output voltage
- r0786[0...1] Measuring sockets normalization per volt

5.3 Fault and alarm messages

5.3.1 General information about faults and alarms

Description

The errors and states detected by the individual components of the drive system are indicated by messages.

The messages are categorized into faults and alarms.

Note

The individual faults and alarms are described in the SINAMICS S110 List Manual in the section titled "Faults and Alarms". Function diagrams for the fault buffer, alarm buffer, fault trigger and fault configuration are also contained in the Section "Function diagrams" -> "Faults and alarms".

Properties of faults and alarms

- Faults
  - Are identified by Fxxxxx.
  - Can lead to a fault reaction.
  - Must be acknowledged once the cause has been remedied.
  - Status via Control Unit and LED RDY.
  - Status via PROFIBUS status signal ZSW1.3 (fault active).
  - Entry in the fault buffer.
- Alarms
  - Are identified by Axxxxx.
  - Have no further effect on the drive.
  - The alarms are automatically reset once the cause has been remedied. No acknowledgment is required.
  - Status via PROFIBUS status signal ZSW1.7 (alarm active).
  - Entry in the alarm buffer.
- General properties of faults and alarms
  - Can be configured (e.g. change fault to alarm, fault reaction).
  - Triggering on selected messages possible.
  - Initiation of messages possible via an external signal.

Acknowledgment of faults

The list of faults and alarms specifies how each fault is acknowledged after the cause has been remedied.

1. Acknowledgment of faults by "POWER ON"
   - Switch the drive on/off (POWER ON)
2. Acknowledgment of faults by "IMMEDIATE"
   - Via PROFIBUS control signal

     STW1.7 (reset fault memory): 0/1 edge

     Set STW1.0 (ON/OFF1) = "0" and "1"
   - Via external input signal

     Binector input and interconnection with digital input

     p2103 = "Requested signal source"

     Across all of the drive objects (DO) of a Control Unit

     p2102 = "Requested signal source"
3. Acknowledge faults with "PULSE INHIBIT"
   - The fault can only be acknowledged with a pulse inhibit (r0899.11 = 0).
   - The same possibilities are available for acknowledging as described under acknowledge IMMEDIATELY.

Note

The drive cannot resume operation until all active faults have been acknowledged.

5.3.2 Buffer for faults and alarms

Note

The contents of the fault buffer are saved to non-volatile memory when the Control Unit is powered down, i.e. the fault buffer history is still available when the unit is powered up again.

NOTICE
The entry in the fault/alarm buffer is made after a delay. For this reason, the fault/alarm buffer should not be read until a change in the buffer is also recognized (r0944, r2121) after "Fault active"/"Alarm active" is output.

Fault buffer

Faults which occur are entered in the fault buffer as follows:

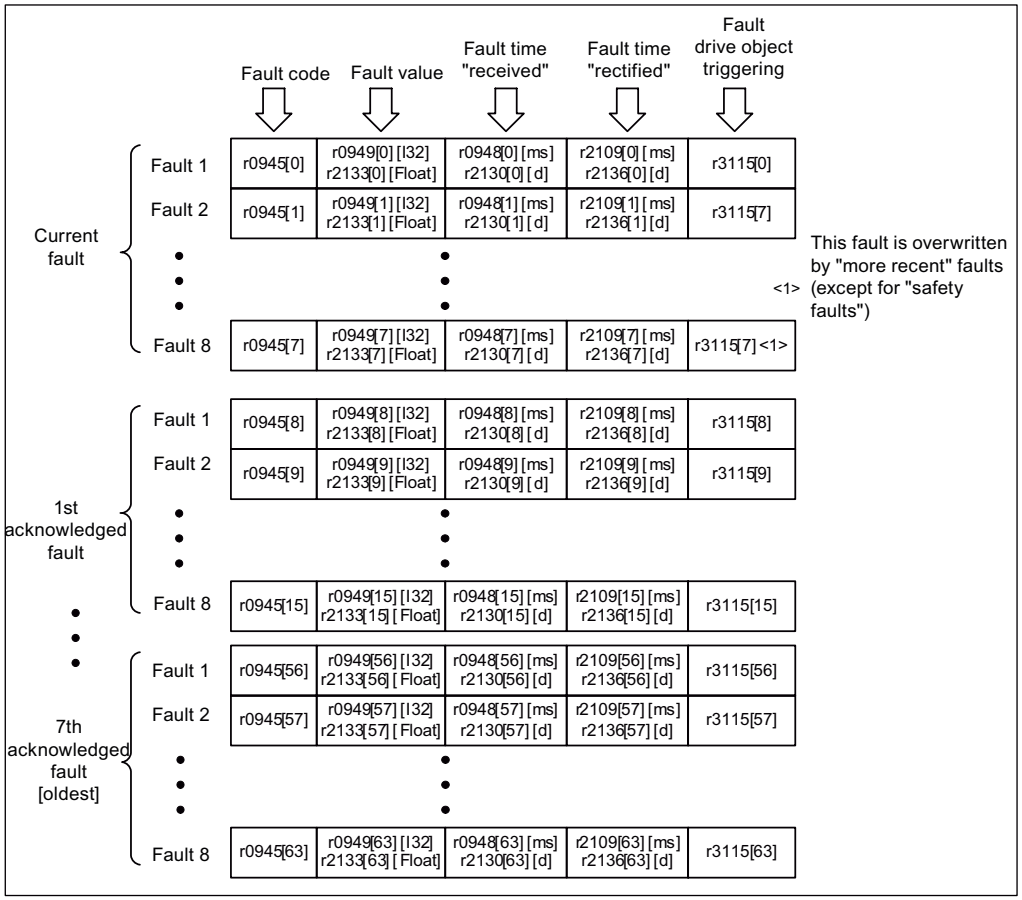

Figure 5-12 Structure of the fault buffer

Properties of the fault buffer:

- A new fault incident encompasses one or more faults and is entered in "Current fault incident".
- The entries appear in the buffer according to the time at which they occurred.
- If a new fault incident occurs, the fault buffer is reorganized. The history is recorded in "Acknowledged fault incident" 1 to 7.
- If the cause of at least one fault in "Current fault incident" is remedied and acknowledged, the fault buffer is reorganized. Faults that have not been remedied remain in "Current fault incident".
- If "Current fault incident" contains eight faults and a new fault occurs, the fault in the parameters in index 7 is overwritten by the new fault.
- r0944 is incremented each time the fault buffer changes.
- A fault value (r0949) can be output for a fault. The fault value is used to diagnose the fault more accurately; please refer to the fault description for details of the meaning.

Clearing the fault buffer

- The fault buffer is reset as follows: p0952 = 0

Alarm buffer, alarm history

The alarm buffer comprises the alarm code, the alarm value and the alarm time (received, resolved). The alarm history occupies the last indices ([8...63]) of the parameter.

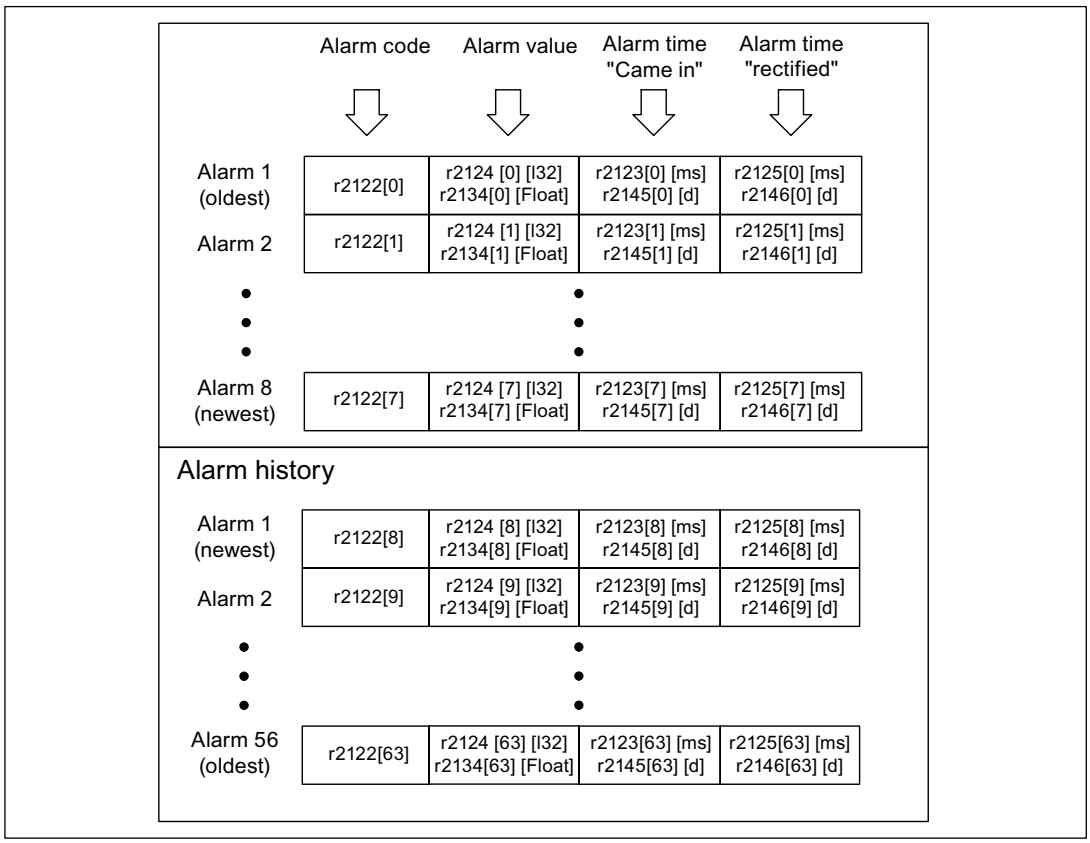

Figure 5-13 Structure of alarm buffer

Alarms that occur are entered in the alarm buffer as follows:

A maximum of 64 alarms are displayed in the alarm buffer:

- Index 0 .. 6: The first 7 alarms are displayed.
- Index 7: The most recent alarm is displayed.

A maximum of 56 alarms are displayed in the alarm history:

- Index 8: The most recent alarm is displayed.
- Index 9 .. 63: The first 55 alarms are displayed.

Properties of the alarm buffer/alarm history:

- The arrangement in the alarm buffer is made after the time that they occurred from 7 to 0. In the alarm history, this is from 8 to 63.
- If 8 alarms have been entered into the alarm buffer, and a new alarm is received, then the alarms that have been resolved are transferred into the alarm history.
- r2121 is incremented each time the alarm buffer changes.
- An alarm value (r2124) can be output for an alarm. The alarm value is used to diagnose the alarm more accurately; please refer to the alarm description for details of the meaning.

Deleting the alarm buffer, index [0...7]:

- The alarm buffer index [0...7] is reset as follows: p2111 = 0

5.3.3 Configuring messages

The properties of the faults and alarms in the drive system are permanently defined.

The following can be configured for some of the messages within a permanently defined framework for the drive system:

Change message type (example)

Select message	Set message type	
p2118[5] = 1001	p2119[5]	= 1: Fault (F)
		= 2: Alarm (A)
		= 3: No message (N)

Change fault reaction (example)

Select message	Set fault response	
p2100[3] = 1002	p2101[3]	= 0: None
		= 1: OFF1
		= 2: OFF2
		= 3: OFF3
		= 4: STOP1 (available soon)
		= 5: STOP2
		= 6: IASC/DC brake Internal armature short-circuit braking or DC brake
		= 7: ENCODER (p0491)

Change acknowledgment (example)

Select message	Set acknowledgment	
p2126[4] = 1003	p2127[4]	= 1: POWER ON
		= 2: IMMEDIATELY
		= 3: PULSE INHIBIT

Note

Only those messages which are listed in the indexed parameters can be changed as desired. All other message settings retain their factory settings or are reset to the factory settings.

Examples:

- In the case of messages listed via p2128[0...19], the message type can be changed. The factory setting is set for all other messages.
- The fault response of fault F12345 has been changed via p2100[n]. The factory settings are to be restored.
  – p2100[n] = 0

Triggering on messages (example)

Table 5- 5

Select message	Trigger signal
p2128[0] = 1001	BO: r2129.0
or	
p2128[1] = 1002	BO: r2129.1

Note

The value from CO: r2129 can be used as group trigger.

CO: r2129 = 0 No selected message has been output.

CO: r2129 > 0 Group trigger.
At least one selected message has been output.
The individual binector outputs BO: r2129 should be investigated.

Triggering messages externally

If the appropriate binector input is interconnected with an input signal, fault 1, 2 or 3 or alarm 1, 2 or 3 can be triggered via an external input signal.

Once an external fault (1 to 3) has been triggered on the Control Unit drive object, this fault is also present on all associated drive objects. If one of these external faults is triggered on a different drive object, it is only present on that particular drive object.

BI: p2106	—> External fault 1	—> F07860(A)
BI: p2107	—> External fault 2	—> F07861(A)
BI: p2108	—> External fault 3	—> F07862(A)
BI: p2112	—> External alarm 1	—> A07850(F)
BI: p2116	—> External alarm 2	—> A07851(F)
BI: p2117	—> External alarm 3	—> A07852(F)

Note

An external fault or alarm is triggered by a 1/0 signal.

An external fault and alarm do not usually mean that an internal drive message has been generated. The cause of an external fault and warning should, therefore, be remedied outside the drive.

5.3.4 Parameters and function diagrams for faults and alarms

Function diagrams (see SINAMICS S110 List Manual)

- 8060 Faults and alarms – fault buffer
- 8065 Faults and alarms – alarm buffer
- 8070 Faults and alarms – fault/alarm trigger word r2129
- 8075 Faults and alarms – fault/alarm configuration

Overview of important parameters (see SINAMICS S110 List Manual)

- r0944 Counter for fault buffer changes
  ...
- p0952 Fault counter
- p2100[0...19] Fault code for fault reaction selection
  ...
- r2139 Status word for faults

5.3.5 Forwarding of faults and alarms

Forwarding of faults and alarms of the CU

When faults or alarms are triggered on the drive object of the CU, it is always assumed that central functions of the drive unit are affected. For this reason, these faults and alarms are not only signaled on the drive object of the CU, but are also forwarded to all other drive objects. The fault reaction affects the drive object of the CU and all other drive objects.

A fault that is set on the drive object of the CU must be acknowledged on all drive objects to which this fault was forwarded. In this way, the fault is then automatically acknowledged on the drive object of the CU. Alternatively all faults of all drive objects can also be acknowledged on the CU.

If a set alarm is reset on the drive object of the CU, this alarm also disappears automatically on the other drive objects to which this alarm was forwarded.

Forwarding of faults and alarms due to BICO interconnections

If two or more drive objects are connected via BICO interconnections, faults and alarms of CU-type drive objects are forwarded to SERVO-type drive objects.

Fault and alarm classes

There are differentiated alarm messages in the cyclic telegrams between the former alarm classes "Alarm" and "Fault". Therefore there are 3 additional levels of alarm between the "pure" alarm and the fault.

The function permits a higher-level control (SIMATIC, SIMOTION, SINUMERIK, etc.) to have different control reactions to alarm messages from the drive.

The new statuses act as alarms for the drive, therefore there is NO immediate reaction from the drive (like for the former level "alarm").

Information on alarm classes are described in status word ZSW2 at bit positions bit 5 - 6 (for SINAMICS) or bit 11-12 (SIMODRIVE 611) (see also "ZSW2" in the chapter "Cyclic Communication").

ZSW2: Valid for SINAMICS Interface Mode p2038=0 (function diagram 2454)

Bit 5 - 6 Alarm classes alarms

= 0: Alarm (former alarm level)

= 1: Alarm class W_NCA alarms

= 2: Alarm class W_NCB alarms

= 3: Alarm class W_NCC alarms

ZSW2: Valid for SIMODRIVE 611 Interface Mode p2038=1 (function diagram 2453)

Bit 11 - 12 Alarm classes alarms

= 0: Alarm (former alarm level)

= 1: Alarm class W_NCA alarms

= 2: Alarm class W_NCB alarms

= 3: Alarm class W_NCC alarms

These attributes for differentiating the alarms are assigned implicitly to the appropriate alarm numbers. The reaction to the existing alarm classes in the alarm is defined by the user program in the higher-level control.

Explanations of the alarm classes

- W_NCA: Drive operation currently not limited
  - e.g. alarm when measurement systems inactive
  - no limitation on current movement
  - Prevent possible switching to the defective measuring system
- W_NCB: Time-limited operation
  - e.g. prewarning temperature: without further action the drive may need to be switched off
  - After a timer stage -> additional fault
  - after exceeding a switch-off threshold -> additional fault
- W_NCC: Functionally limited operation
  - e.g. reduced voltage/current/torque/speed limits (i2t)
  - e.g. continue with reduced accuracy / resolution
  - e.g. continue without encoder

Parameterizing using the BOP20

6

6.1 General information about the BOP20

With the BOP20, drives can be powered up and powered down during the commissioning phase and parameters can be displayed and modified. Faults can be diagnosed as well as acknowledged.

The BOP20 is snapped onto the Control Unit; to do this the dummy cover must be removed (for additional information on mounting, please refer to the Equipment Manual).

Overview of displays and keys

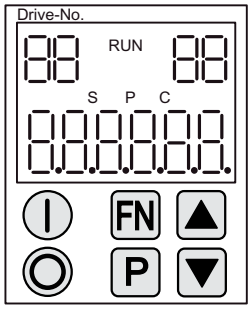

Figure 6-1 Overview of displays and keys

Information on the displays

Table 6- 1 LED

Display	Meaning
top left 2 positions	The active drive object of the BOP is displayed here. The displays and key operations always refer to this drive object.
RUN	Is lit (bright) if the drive is in the RUN state (operation). RUN is also displayed via bit r0899.2 of the drive.
top right 2 positions	The following is displayed in this field: • More than 6 digits: Characters that are still present but are invisible (e.g. "r2" —> 2 characters to the right are invisible, "L1" —> 1 character to the left is invisible) • Designation of BICO inputs (bi, ci) • Designation of BICO outputs (bo, co) • Source object of a BICO interconnection to a drive object different than the active one.
S	Is (bright) if at least one parameter was changed and the value was not transferred into the non-volatile memory.
P	Is lit (bright) if, for a parameter, the value only becomes effective after pressing the P key.
C	Is light (bright) if at least one parameter was changed and the calculation for consistent data management has still not been initiated.
Below, 6 digit	Displays, e.g. parameters, indices, faults and alarms.

Information on the keys

Table 6- 2 Keys

Key	Name	Meaning
	ON	Power up the drive for which the command "ON/OFF1" should come from the BOP. Binector output r0019.0 is set using this key.
	OFF	Powering down the drive for which the commands "ON/OFF1", "OFF2" or "OFF3" should come from the BOP. The binector outputs r0019.0, .1 and .2 are simultaneously reset when this key is pressed. After the key has been released, binector outputs r0019.1 and .2 are again set to a "1" signal.
FN	Functions	The significance of these keys depends on the actual display. Note: The effectiveness of this key to acknowledge faults can be defined using the appropriate BiCo parameterization.
P	Parameters	The significance of these keys depends on the actual display. If this key is pressed for 3 s, the "Copy RAM to ROM" function is executed. The "S" displayed on the BOP disappears.
	Raise	The keys depend on the current display and are used to either raise or lower values.
	Lower	

BOP20 functions

Table 6- 3 Functions

Name	Description
Units	The units are not displayed on the BOP.
Access level	The access level for the BOP is defined using p0003. The higher the access level, the more parameters can be selected using the BOP.
Unplug while voltage is present	The BOP can be withdrawn and inserted under voltage. • The ON and OFF keys have a function. When withdrawing, the drive is stopped. Once the BOP has been inserted, the drive must be switched on again. . • ON and OFF keys have no function Withdrawing and inserting has no effect on the drive.
Actuating keys	The following applies to the "P" and "FN" keys: • When used in a combination with another key, "P" or "FN" must be pressed first and then the other key.

Parameters for BOP

Drive object, Control Unit

- p0003 BOP access level
- p0009 Device commissioning, parameter filter
- r0019 CO/BO: Control word, BOP
- p0977 Save all parameters

SERVO drive object

- p0010 Commissioning parameter filter

6.2 Displays and using the BOP20

Features

- Operating display
- Changing the active drive object
- Displaying/changing parameters
- Displaying/acknowledging faults and alarms
- Controlling the drive using the BOP20

Parameter display

The parameters are selected in the BOP20 using the number. The parameter display is reached from the operating display by pressing the "P" key. Parameters can be searched for using the arrow keys. The parameter value is displayed by pressing the "P" key again. You can toggle between the drive objects by simultaneously pressing the keys "FN" and the arrow keys. You can toggle between r0000 and the parameter that was last displayed by pressing the "FN" key in the parameter display.

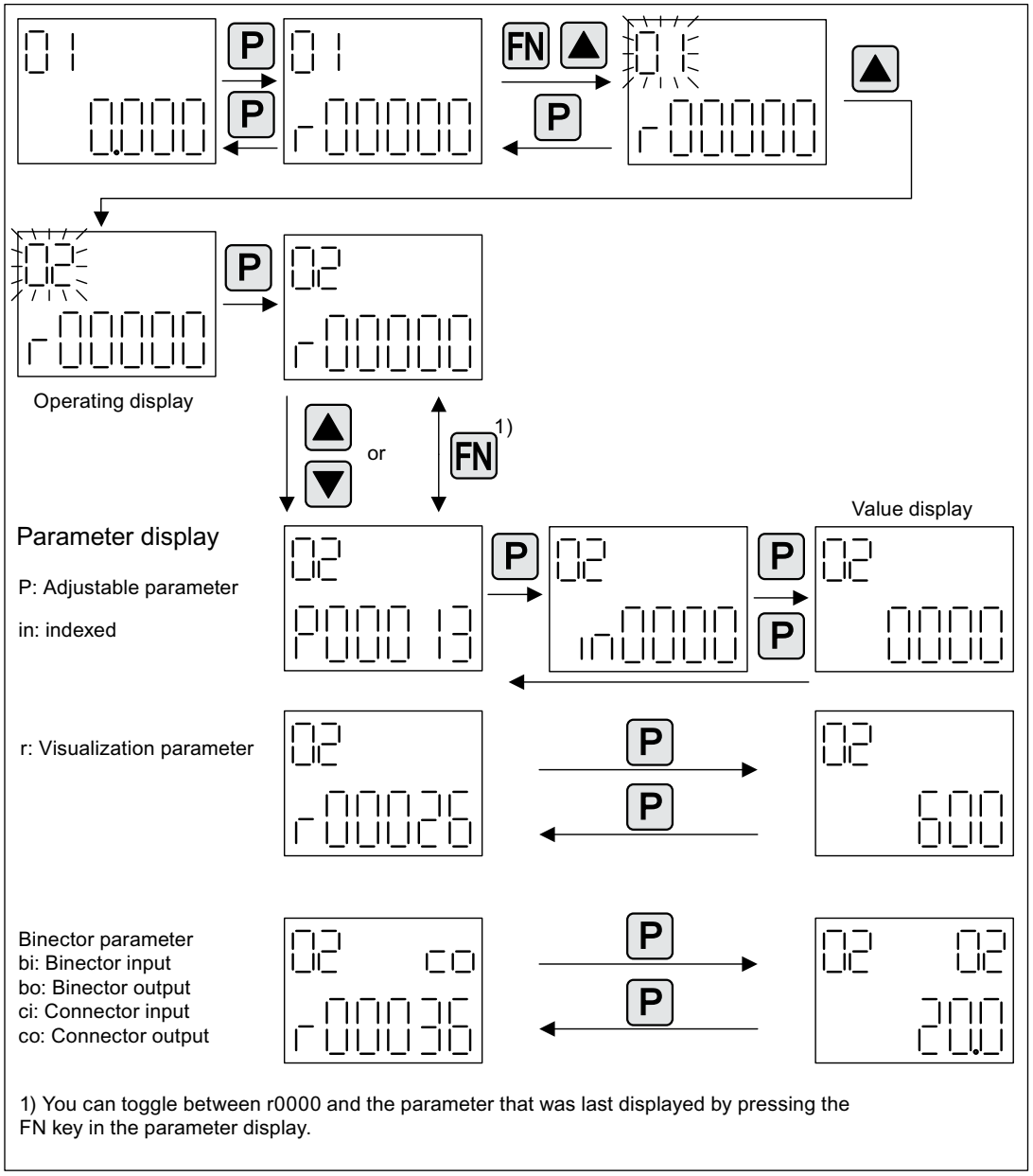

Figure 6-2 Parameter display

Value display

To switch from the parameter display to the value display, press the "P" key. In the value display, the values of the adjustable parameters can be increased and decreased using the arrow. The cursor can be selected using the "FN" key.

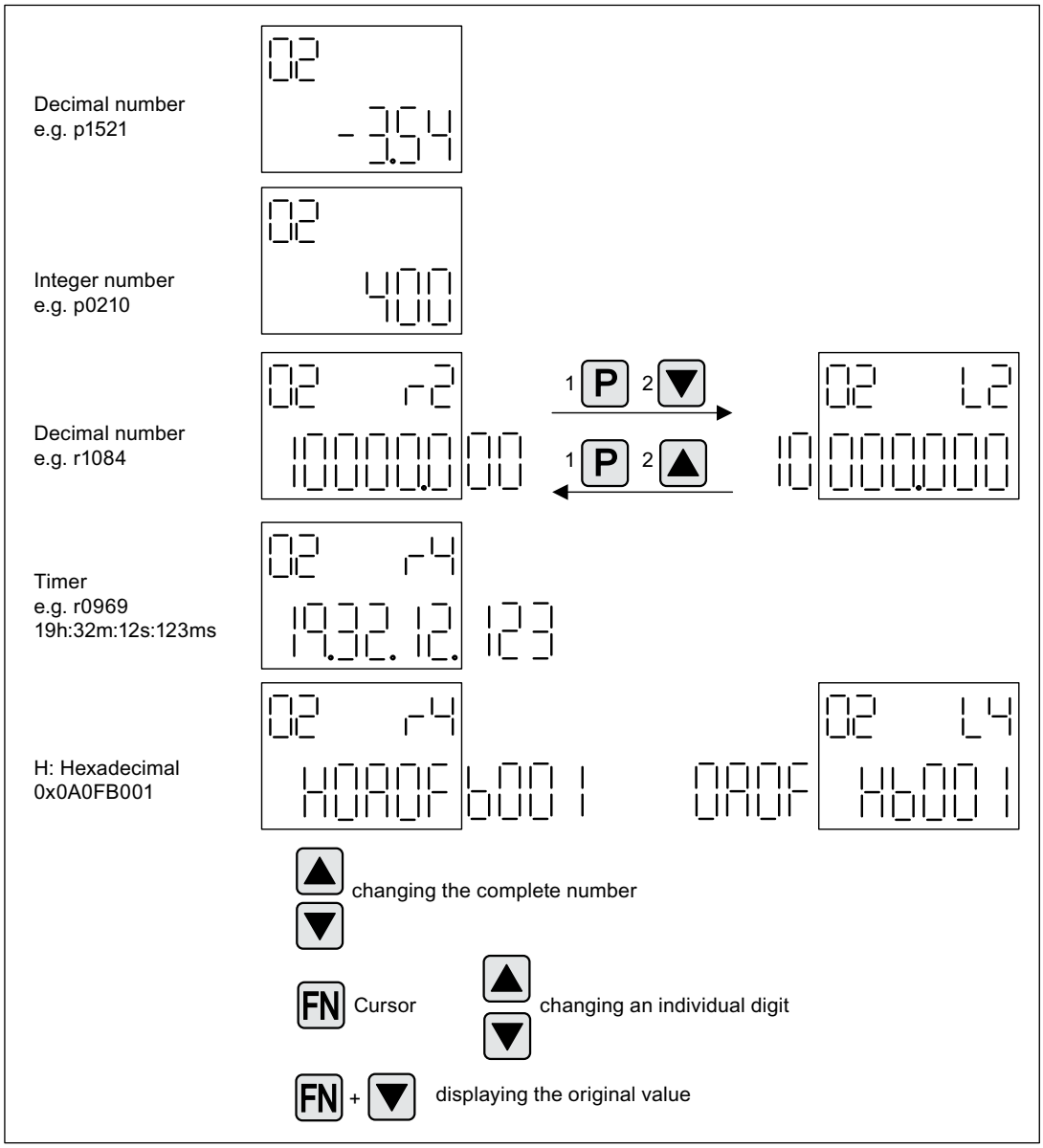

Figure 6-3 Value display

Example: Changing binector and connector input parameters

For the binector input p0840[0] (OFF1) of drive object 2 binector output r0019.0 of the Control Unit (drive object 1) is interconnected.

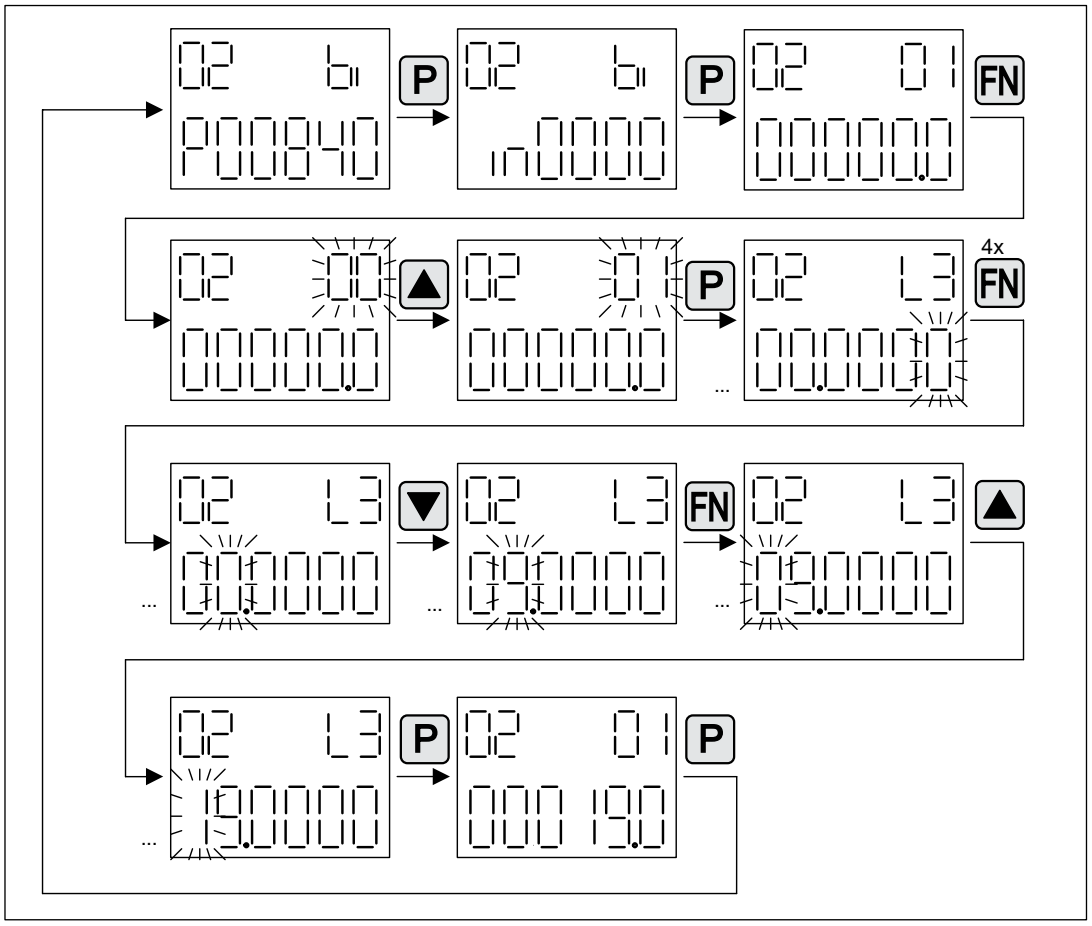

Figure 6-4 Example: Changing indexed binector parameters

6.3 Fault and alarm displays

Displaying faults

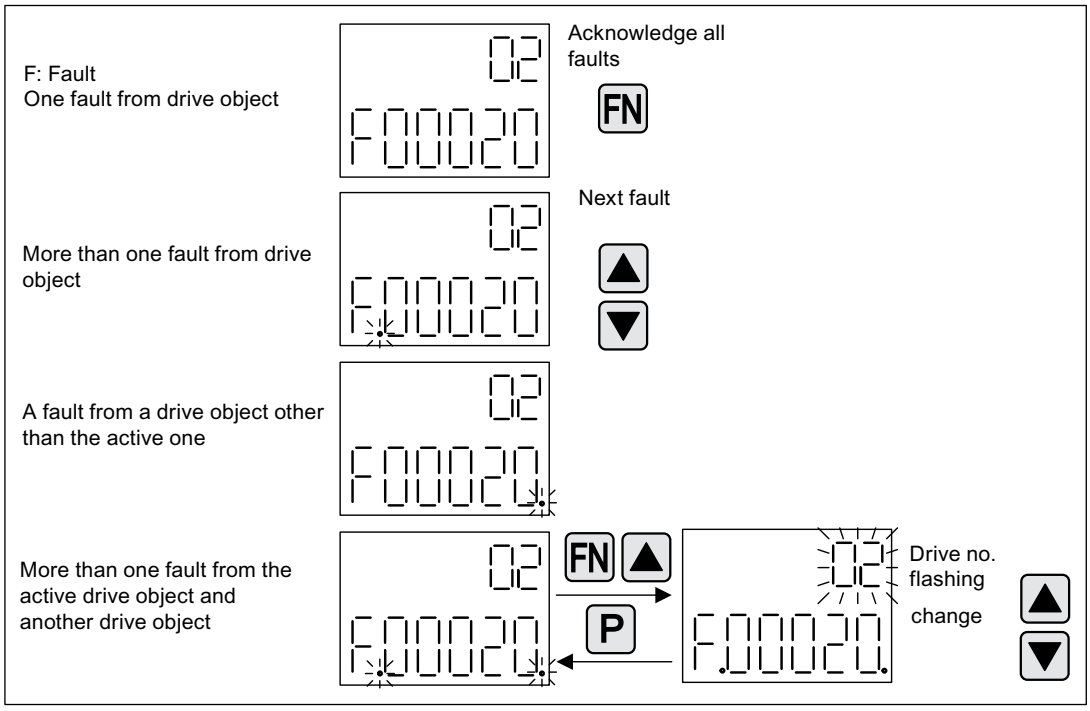

Figure 6-5 Faults

Displaying alarms

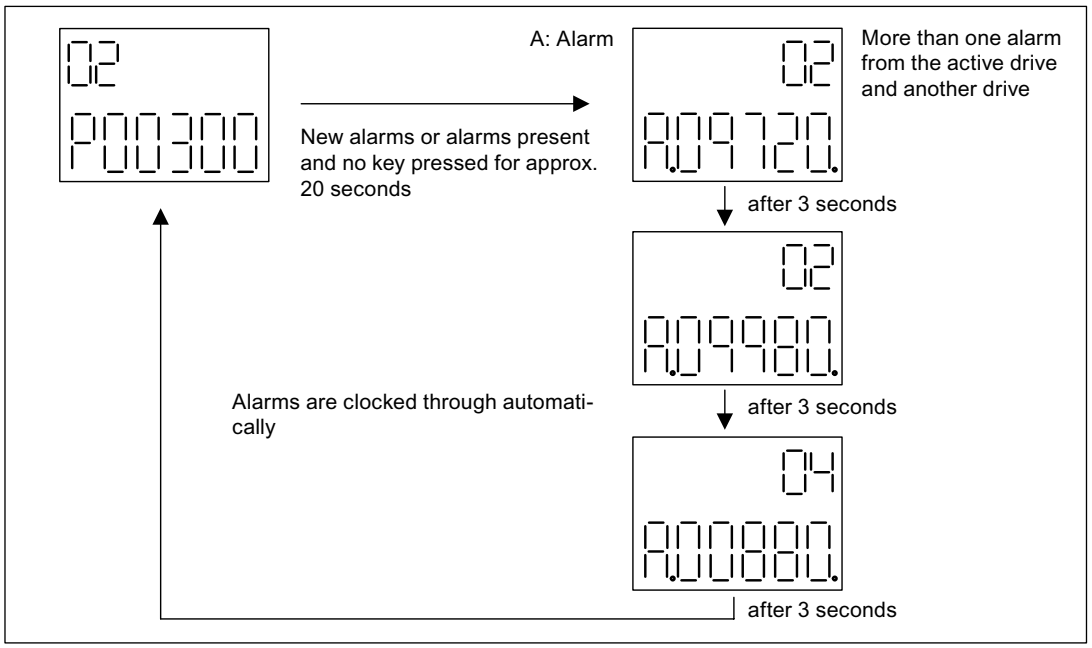

Figure 6-6 Alarms

6.4 Controlling the drive using the BOP20

Description

When commissioning the drive, it can be controlled via the BOP20. A control word is available on the Control Unit drive object (r0019) for this purpose, which can be interconnected with the appropriate binector inputs of e.g. the drive.

The interconnections do not function if a standard PROFIdrive telegram was selected as its interconnection cannot be disconnected.

Table 6- 4 BOP20 control word

Bit (r0019)	Name	Example, interconnection parameters
0	ON / OFF (OFF1)	p0840
1	No coast down/coast down (OFF2)	p0844
2	No quick stop/quick stop (OFF3)	p0848
Note: For simple commissioning, only bit 0 should be interconnected. When interconnecting bits 0 ... 2, then the system is powered-down according to the following priority: OFF2, OFF3, OFF1.		
7	Acknowledge fault (0 -> 1)	p2102

Drive functions

7

7.1 Servo control

This type of closed-loop control enables operation with a high dynamic response and precision for a motor with a motor encoder.

7.1.1 Speed controller

The speed controller controls the motor speed using the actual values from the encoder (operation with encoder) or the calculated actual speed value from the electric motor model (operation without encoder).

Properties

- Speed setpoint filter
- Speed controller adaptation

Note

Speed and torque cannot be controlled simultaneously. If speed control is activated, this has priority over torque control.

Limits

The maximum speed p1082[D] is defined with default values for the selected motor and becomes active during commissioning. The ramp function generators refer to this value.

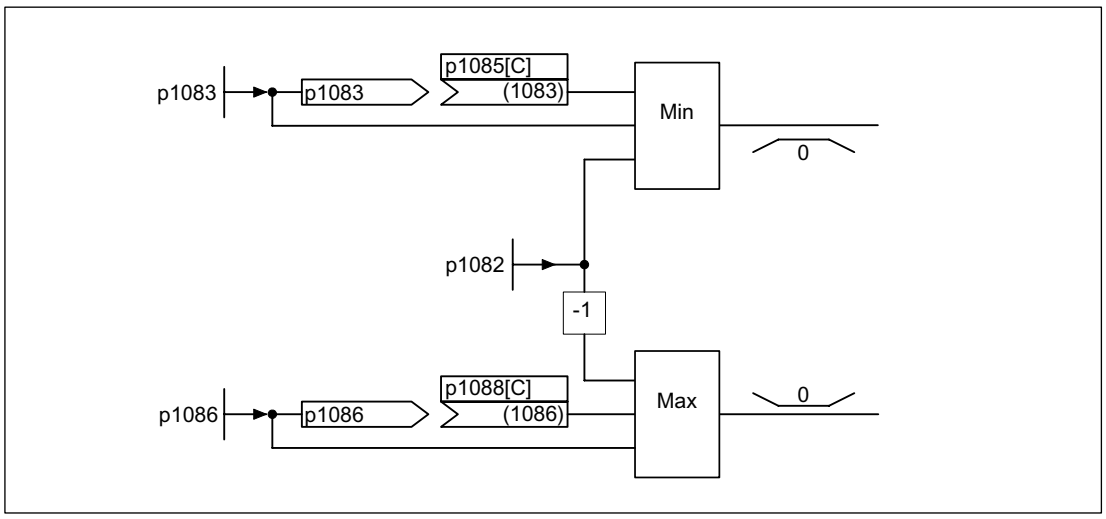

Figure 7-1 Speed controller limitations

7.1.2 Speed setpoint filter

The speed setpoint filter can be used as follows:

- Bandstop
- Low-pass 1st order (PT1) or
- Low-pass 2nd order (PT2)

The filter is activated via parameter p1414. The filter elements are selected via parameter p1415.

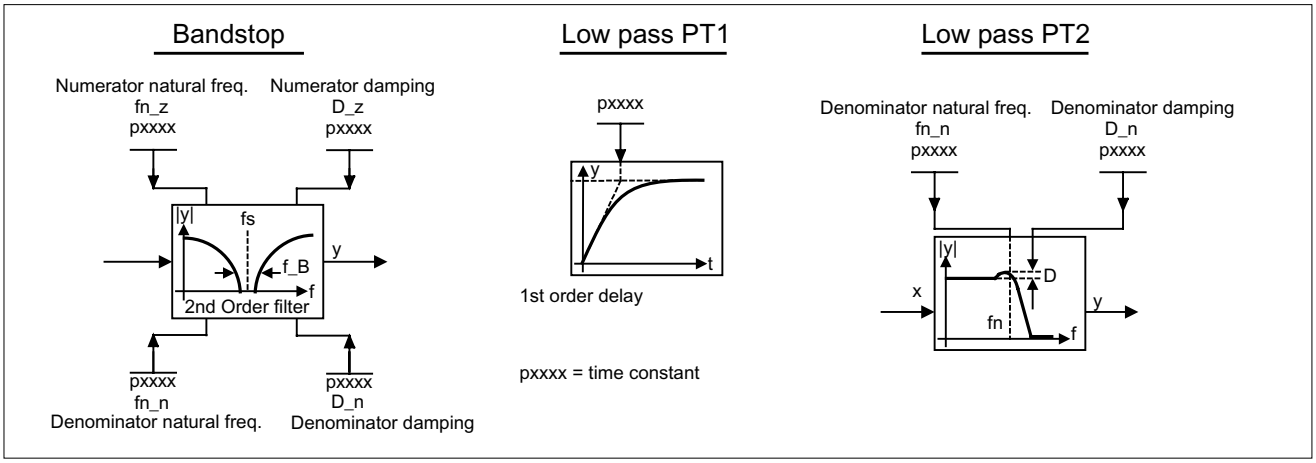

Figure 7-2 Filter overview for speed setpoint filters

Function diagrams (see SINAMICS S110 List Manual)

- 5020 Speed setpoint filter and speed pre-control

Overview of important parameters (see SINAMICS S110 List Manual)

Adjustable parameters

- p1414[D] Speed setpoint filter activation
- p1415[D] Speed setpoint filter 1 type
- p1416[D] Speed setpoint filter 1 time constant
- p1417[D] Speed setpoint filter 1 denominator natural frequency
- p1418[D] Speed setpoint filter 1 denominator damping
- p1419[D] Speed setpoint filter 1 numerator natural frequency
- p1420[D] Speed setpoint filter 1 numerator damping

Parameterization

The "speed setpoint filter" parameter screen is selected with the icon in the toolbar of the STARTER commissioning tool.

7.1.3 Speed controller adaptation

Description

Two adaptation methods are available, namely free Kp_n adaptation and speed-dependent Kp_n/Tn_n adaptation.

Free Kp_n adaptation is also active in "operation without encoder" mode and is used in "operation with encoder" mode as an additional factor for speed-dependent Kp_n adaptation.

Speed-dependent Kp_n/Tn_n adaptation is only active in "operation with encoder" mode and also affects the Tn_n value.

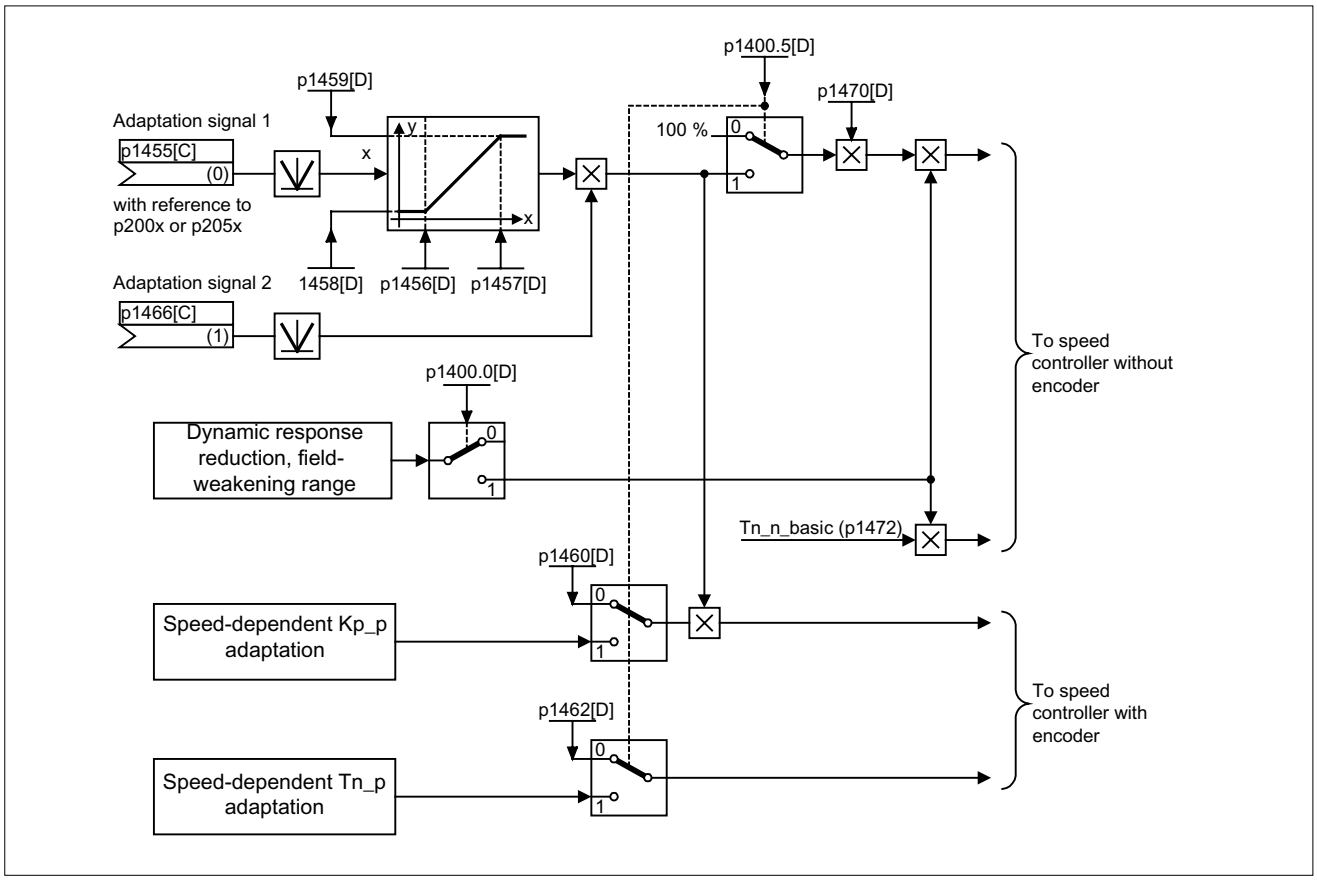

Figure 7-3 Free Kp_n adaptation

Example of speed-dependent adaptation

Note

This type of adaptation is only active in "operation with encoder" mode.

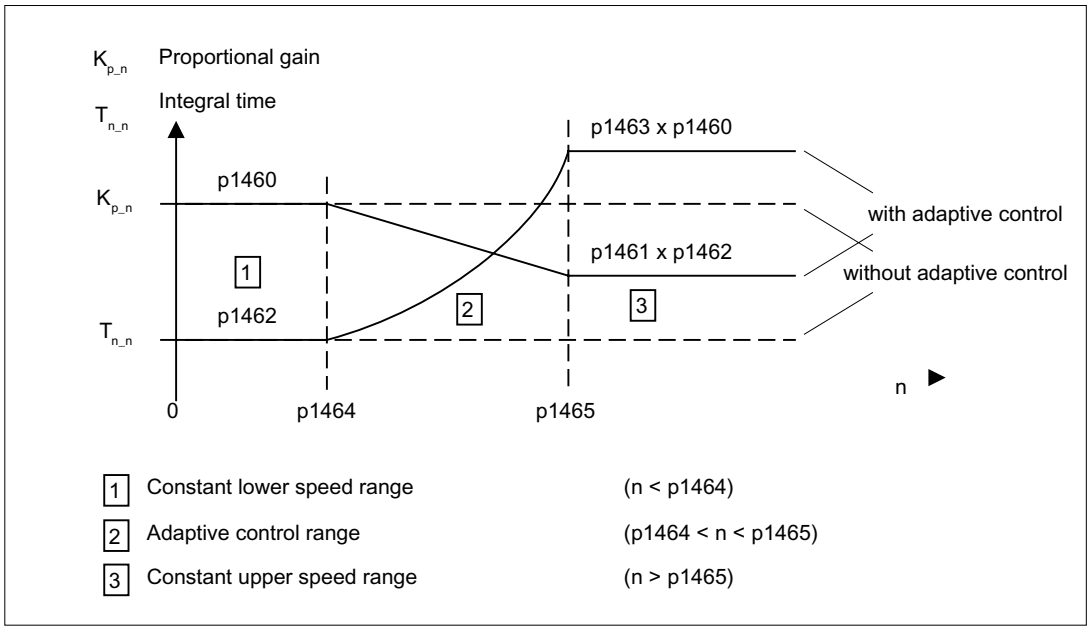

Figure 7-4 Speed controller Kp_n/Tn_n adaptation

Parameterization

The "speed controller" parameter screen is selected via the following icon in the toolbar of the STARTER commissioning tool:

Figure 7-5 STARTER icon for "speed controller"

Function diagrams (see SINAMICS S110 List Manual)

- 5050 Kp_n and Tn_n adaptation

Overview of important parameters (see SINAMICS S110 List Manual)

Free Kp_n adaptation

- p1455[0...n] CI: Speed controller P gain adaptation signal
- p1456[0...n] Speed controller P gain adaptation lower starting point
- p1457[0...n] Speed controller P gain adaptation upper starting point
- p1458[0...n] Lower adaptation factor
- p1459[0...n] Upper adaptation factor

Speed-dependent Kp_n/Tn_n adaptation

- p1460[0...n] Speed controller P gain lower adaptation speed
- p1461[0...n] Speed controller Kp adaptation speed upper scaling
- p1462[0...n] Speed controller integral time lower adaptation speed
- p1463[0...n] Speed controller Tn adaptation speed upper scaling
- p1464[0...n] Speed controller lower adaptation speed
- p1465[0...n] Speed controller upper adaptation speed
- p1466[0...n] CI: Speed controller P gain scaling

7.1.4 Torque-controlled operation

Description

An operating mode switchover (p1300) can be carried out or a binector input (p1501) used to switch from speed control to torque control mode. All torque setpoints from the speed control system are rendered inactive. The setpoints for torque control mode are selected by parameterization.

Properties

- Switchover to torque control mode via:
  - Operating mode selection
  - Binector input
- Torque setpoint can be specified:
  - The torque setpoint source can be selected
  - The torque setpoint can be scaled
  - An additional torque setpoint can be entered
- Display of the overall torque

Commissioning of torque control mode

1. Set torque control mode (p1300 = 23; p1501 = "1" signal)
2. Specify torque setpoint
   - Select source (p1511)
   - Scale setpoint (p1512)
   - Select supplementary setpoint (1513)

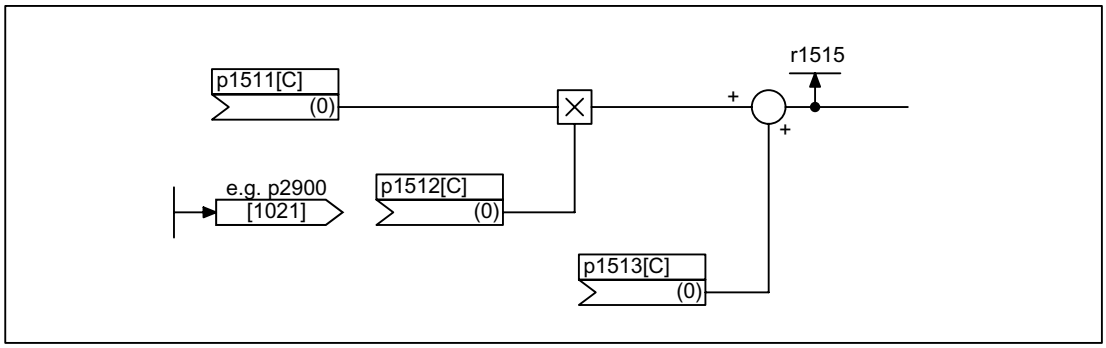

Figure 7-6 Torque setpoint

3. Activate enable signals

OFF responses

- OFF1 and p1300 = 23
  - Reaction as for OFF2
- OFF1, p1501 = "1" signal and p1300 ≠ 23
  - No separate braking response; the braking response takes place by a drive that specifies the torque.
  - The pulses are suppressed when the brake application time (p1217) expires. Zero speed is detected when the actual speed drops below the speed threshold (p1226) or once the monitoring time (p1227) started when speed setpoint ≤ speed threshold (p1226) has expired.
  - Switching on inhibited is activated.
- OFF2
  - Immediate pulse suppression, the drive coasts to standstill.
  - The motor brake (if parameterized) is closed immediately.
  - Switching on inhibited is activated.

- OFF3
  - Switch to speed-controlled operation
  - n_set = 0 is input immediately to brake the drive along the OFF3 deceleration ramp (p1135).
  - When zero speed is detected, the motor brake (if parameterized) is closed.
  - The pulses are suppressed when the motor brake application time (p1217) has elapsed. Zero speed is detected when the actual speed drops below the speed threshold (p1226) or once the monitoring time (p1227) started when speed setpoint ≤ speed threshold (p1226) has expired.
  - Switching on inhibited is activated.

Function diagrams (see SINAMICS S110 List Manual)

- 5060 Torque setpoint, control type switchover
- 5610 Torque limiting/reduction/interpolator

Signal overview (see SINAMICS S110 List Manual)

- r1406.12 Torque control active

Parameterization

The "torque setpoint" parameter screen is selected via the following icon in the toolbar of the STARTER commissioning tool:

Figure 7-7 STARTER icon for "torque setpoint"

Overview of important parameters (see SINAMICS S110 List Manual)

Adjustable parameters

- p1300 Open-loop/closed-loop control operating mode
- p1501[C] BI: Change over between closed-loop speed/torque control
- p1511[C] CI: Supplementary torque 1
- p1512[C] CI: Supplementary torque 1 scaling
- p1513[C] CI: Supplementary torque 2

Display parameters

- r1515 Supplementary torque total

7.1.5 Torque setpoint limitation

Description

The steps required for limiting the torque setpoint are as follows:

1. Define the torque setpoint and an additional torque setpoint
2. Generate torque limits

The torque setpoint can be limited to a maximum permissible value in all four quadrants. Different limits can be parameterized for motor and regenerative modes.

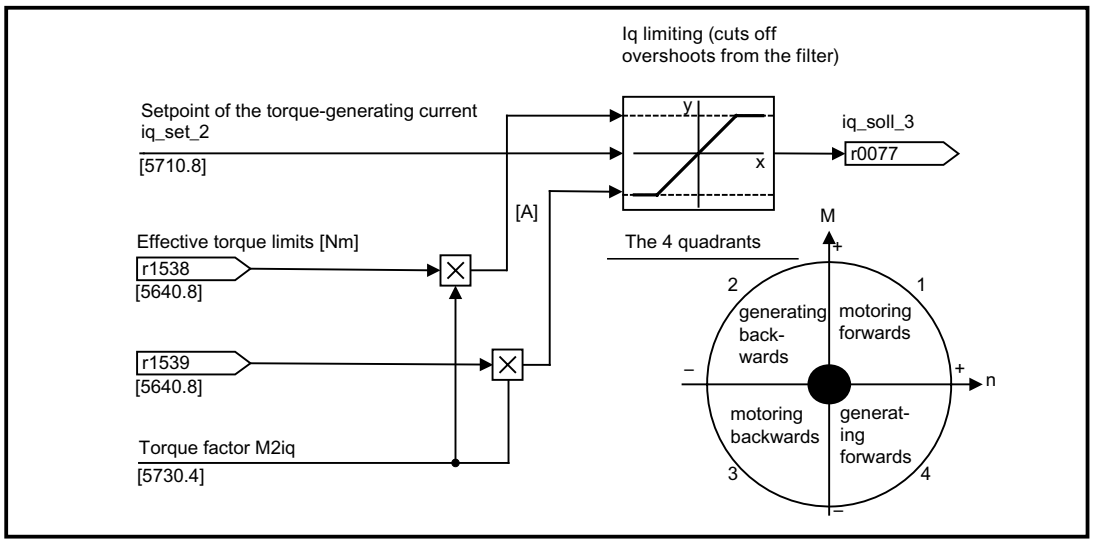

Figure 7-8 Current/torque setpoint limiting

Note

This function is effective immediately without any settings. The user can also define further settings for limiting the torque.

Properties

The connector inputs of the function are initialized with fixed torque limits. If required, the torque limits can also be defined dynamically (during operation).

- A control bit can be used to select the torque limitation mode. The following alternatives are available:
  - Upper and lower torque limit
  - Motor and regenerative torque limit
- Additional power limitation configurable
  - Motor mode power limit
  - Regenerative mode power limit

- The following factors are monitored by the current controller and thus always apply in addition to torque limitation:
  - Stall power
  - Maximum torque-generating current
- Offset of the setting values also possible (see "Example: Torque limits with or without offset").
- The following torque limits are displayed via parameters:
  - Lowest of all upper torque limits with and without offset
  - Highest of all lower torque limits with and without offset

Fixed and variable torque limit settings

Table 7- 1 Fixed and variable torque limit settings

Selection	Torque limitation mode			
Mode	Maximum upper or lower torque limits p1400.4 = 0		Maximum motor or regenerative mode torque limits p1400.4 = 1	
Fixed torque limit	Upper torque limit (as positive value)	p1520	Motor mode torque limit (as positive value)	p1520
	Lower torque limit (as negative value)	p1521	Regenerative mode torque limit (as negative value)	p1521
Source for variable torque limit	Upper torque limit	p1522	Motor mode torque limit	p1522
	Lower torque limit	p1523	Regenerative mode torque limit	p1523
Source for variable scaling factor of torque limit	Upper torque limit	p1528	Motor mode torque limit	p1528
	Lower torque limit	p1529	Regenerative mode torque limit	p1529
Torque offset for torque limit	Shifts the upper and lower torque limits together	p1532	Shifts the motor and regenerative mode torque limits together	p1532

Variants of torque limitation

The following variants are available:

1. No settings entered:

   The application does not require any additional restrictions to the torque limits.
2. Fixed limits are required for the torque:

   The fixed upper and lower limits or alternatively the fixed motor and regenerative limits can be specified separately by different sources.
3. Dynamic limits are required for the torque:
   - The dynamic upper and lower limit or, alternatively, the dynamic motor and regenerative limit can be specified separately by different sources.
   - Parameters are used to select the source of the current limit.

4. A torque offset can be parameterized.
5. In addition, the power limits can be parameterized separately for motor and regenerative mode.

NOTICE
Negative values at r1534 or positive values at r1535 represent a minimum torque for the other torque directions and can cause the drive to rotate if no load torque is generated to counteract this (see function diagram 5630 in the SINAMICS S110 List Manual).

Example: Torque limits with or without offset

The signals selected via p1522 and p1523 include the torque limits parameterized via p1520 and p1521.

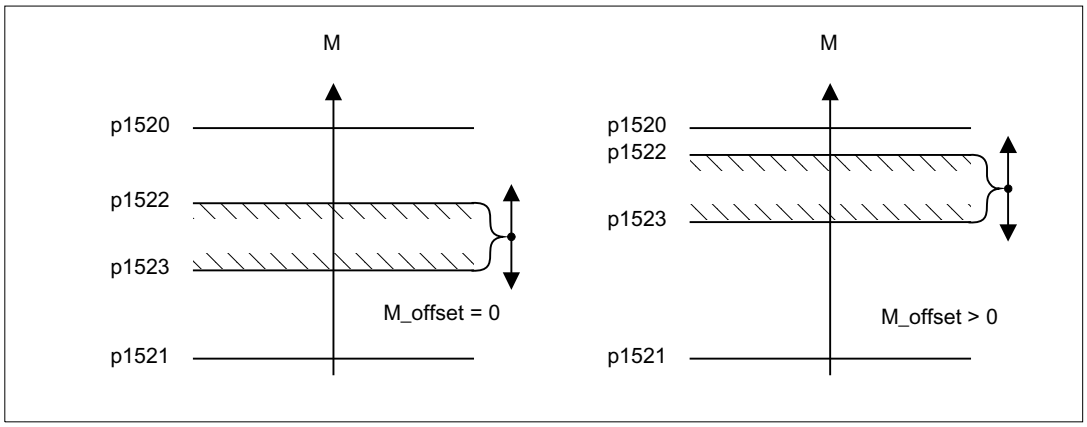

Figure 7-9 Example: Torque limits with or without offset

Activating the torque limits

1. Use parameters to select the torque limitation source.
2. Use a control word to specify the torque limitation mode.
3. The following can also be carried out if necessary:
   – Select and activate additional limitations.
   – Set the torque offset.

Examples

- Travel to fixed stop
- Tension control for continuous goods conveyors and winders

Function diagrams (see SINAMICS S110 List Manual)

- 5610 Torque limiting/reduction/interpolator
- 5620 Motor/generator torque limit
- 5630 Upper/lower torque limit
- 5640 Mode changeover, power/current limiting

Parameterization

The "torque limit" parameter screen is selected via the following icon in the toolbar of the STARTER commissioning tool:

Figure 7-10 STARTER icon for "torque limit"

Overview of important parameters (see SINAMICS S110 List Manual)

- p0640[0...n] Current limit
- p1400[0...n] Speed control configuration
- r1508 CO: Torque setpoint before supplementary torque
- r1509 CO: Torque setpoint before torque limiting
- r1515 Supplementary torque total
- p1520[0...n] CO: Torque limit, upper/motoring
- p1521[0...n] CO: Torque limit, lower/regenerative
- p1522[C] CI: Torque limit, upper/motoring
- p1523[C] CI: Torque limit, lower/regenerative
- r1526 Torque limit, upper/motoring without offset
- r1527 Torque limit, lower/regenerative without offset
- p1528[0...n] CI: Torque limit, upper/motoring, scaling
- p1529[0...n] CI: Torque limit, lower/regenerative scaling
- p1530[0...n] Motor mode power limit
- p1531[0...n] Regenerative mode power limit
- p1532[0...n] Torque limit offset
- r1533 Maximum torque-generating current of all current limits
- r1534 CO: Torque limit, upper total
- r1535 CO: Torque limit, lower total
- r1536 Maximum motor-mode torque-generating current limit
- r1537 Minimum regenerative-mode torque-generating current
- r1538 CO: Upper effective torque limit
- r1539 CO: Lower effective torque limit

7.1.6 Current controller

Properties

- PI controller for current control
- Two identical current setpoint filters
- Current and torque limitation
- Current controller adaptation
- Flux control

Closed-loop current control

No settings are required for operating the current controller. Optimization measures can be taken in certain circumstances.

Current and torque limitation

The current and torque limitations are initialized when the system is commissioned for the first time and should be adjusted according to the application.

Current controller adaptation

The P gain of the current controller can be reduced (depending on the current) by means of current controller adaptation. Current controller adaptation can be deactivated with the setting p1402.2 = 0.

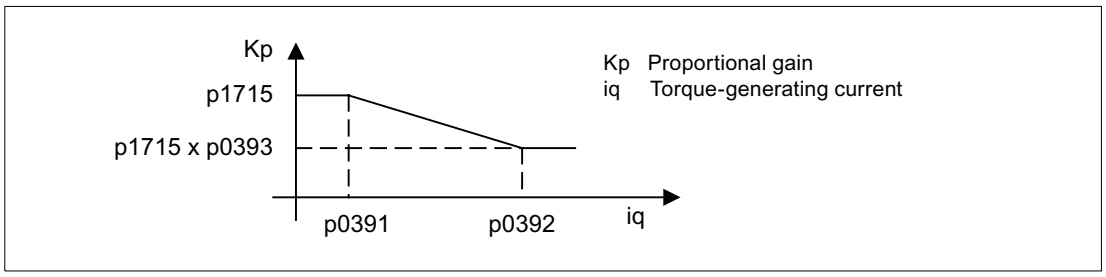

Figure 7-11 Current controller adaptation

Flux controller (for induction motor)

The parameters for the flux controller are initialized when the system is commissioned for the first time and do not usually need to be adjusted.

Commissioning with STARTER

In the STARTER commissioning tool, the "Current controller" parameter screen is selected with the icon in the toolbar:

Function diagrams (see SINAMICS S110 List Manual)

- 5710 Current setpoint filters
- 5714 Iq and Id controller
- 5722 Specified field current, flux reduction, flux controller

Overview of important parameters (see SINAMICS S110 List Manual)

Closed-loop current control

- p1701[0...n] Current controller reference model dead time
- p1715[0...n] Current controller P gain
- p1717[0...n] Current controller integral time

Current and torque limitation

- p0323[0...n] Maximum motor current
- p0326[0...n] Stall torque correction factor
- p0640[0...n] Current limit
- p1520[0...n] CO: Torque limit, upper/motoring
- p1521[0...n] CO: Torque limit, lower/regenerative
- p1522[0...n] CI: Torque limit, upper/motoring
- p1523[0...n] CI: Torque limit, lower/regenerative
- p1524[0...n] CO: Torque limit, upper/motoring, scaling
- p1525[0...n] CO: Torque limit, lower/regenerative scaling
- p1528[0...n] CI: Torque limit, upper/motoring, scaling
- p1529[0...n] CI: Lower or regenerative torque limit scaling
- p1530[0...n] Motor mode power limit
- p1531[0...n] Regenerative mode power limit
- p1532[0...n] Torque offset torque limit

Display parameters

- r1526 Torque limit, upper/motoring without offset
- r1527 Torque limit, lower/regenerative without offset
- r1533 Maximum torque-generating current of all current limits
- r1534 CO: Torque limit, upper total
- r1535 CO: Torque limit, lower total
- r1536 Maximum torque-generating current limit
- r1537 Maximum torque-generating current limit
- r1538 CO: Upper effective torque limit
- r1539 CO: Upper effective torque limit

Current controller adaptation

- p0391[0...n] Current controller adaptation lower starting point
- p0392[0...n] Current controller adaptation upper starting point
- p0393[0...n] Current controller adaptation upper P gain
- p1590[0...n] Flux controller P gain
- p1592[0...n] Flux controller integral time

7.1.7 Current setpoint filter

7.1.7.1 Description

Description

The two current setpoint filters connected in series can be parameterized as follows:

- Low-pass 2nd order (PT2: -40 dB/decade) (type 1)
- General filter 2nd order (type 2)
  Bandstop and lowpass with reduction are converted to the parameters of the general filter 2nd order via STARTER.
  - Bandstop
  - Low-pass with reduction by a constant value

The phase frequency curve is shown alongside the amplitude log frequency curve. A phase shift results in a control system delay and should be kept to a minimum.

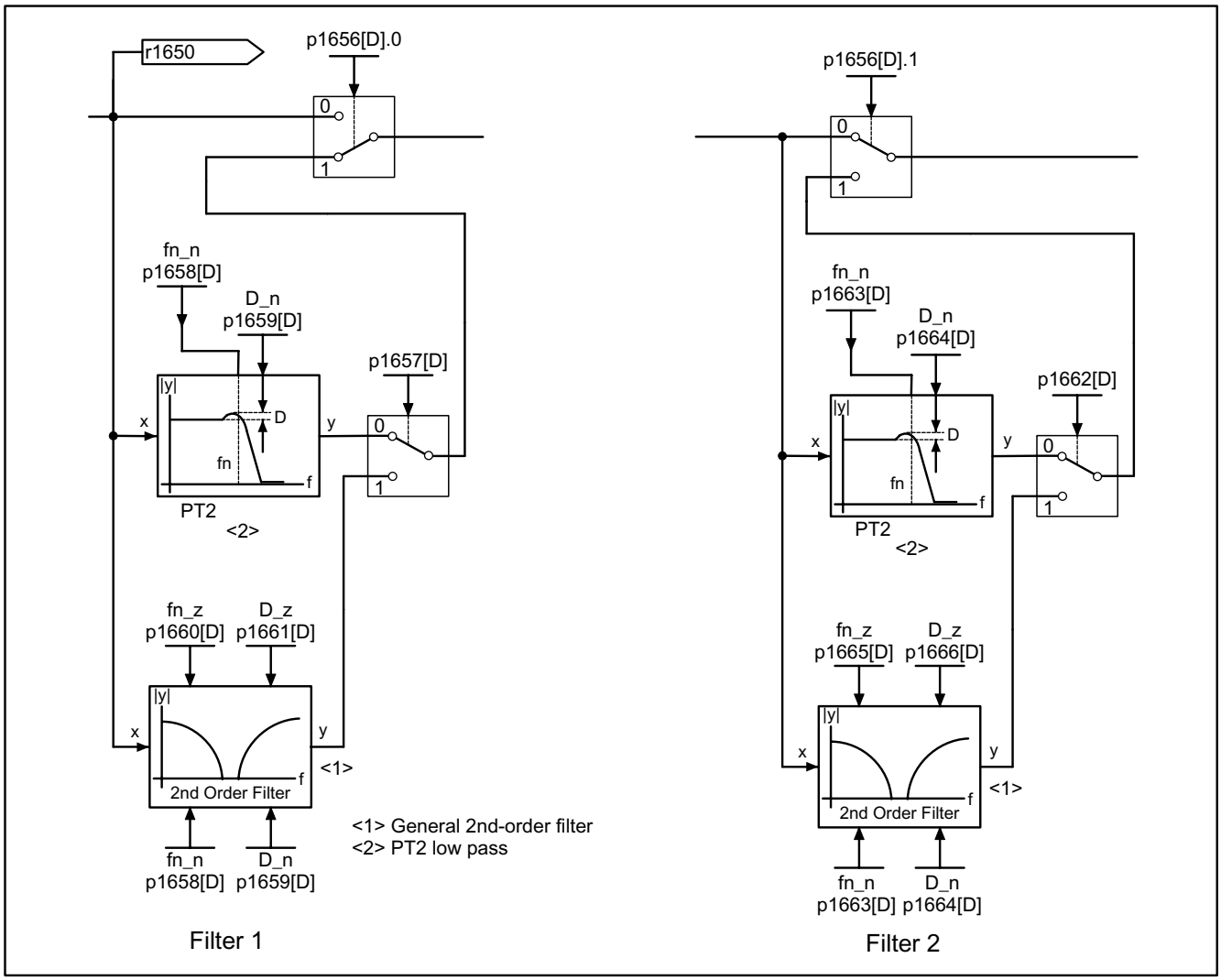

Figure 7-12 Current setpoint filter

Transfer function:

$$H_{(s)} = \frac{1}{\left(\frac{s}{2\pi f_N}\right)^2 + \frac{2D_N}{2\pi f_N} \bullet s + 1}$$

Denominator natural frequency f_N
Denominator damping D_N

Table 7- 2 Example of a PT2 filter

STARTER filter parameters	Amplitude log frequency curve	Phase frequency curve
Characteristic frequency f_N 500 Hz Damping D_N 0.7 dB	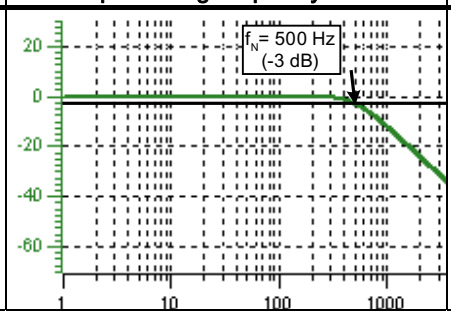	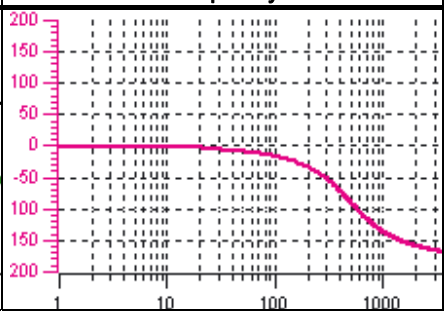

Band-stop with infinite notch depth

Table 7- 3 Example of band-stop with infinite notch depth

STARTER filter parameters	Amplitude log frequency curve	Phase frequency curve
Blocking frequency f_{Sp} = 500 Hz Bandwidth (-3 dB) f_{BB} = 500 Hz Notch depth K = -∞ dB Reduction Abs = 0 dB	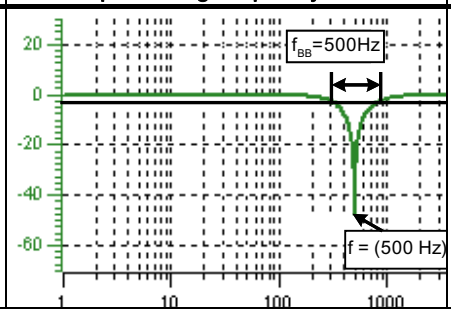	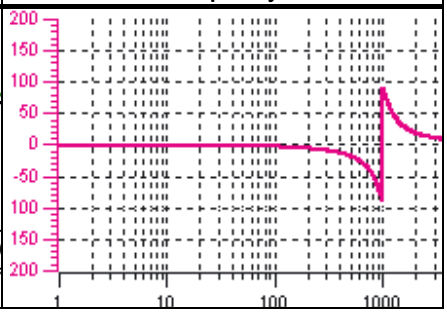

Simplified conversion to parameters for general order filters:

Reduction or increase after the blocking frequency (Abs)

Infinite notch depth at the blocking frequency

- Numerator natural frequency $f_Z = f_{Sp}$
- Numerator damping $D_Z = 0$
- Denominator natural frequency $f_N = f_{Sp}$
- Denominator damping $D_N = \frac{f_{BB}}{2 \bullet f_{Sp}}$

Band-stop with defined notch depth

Table 7- 4 Example of band-stop with defined notch depth

STARTER filter parameters	Amplitude log frequency curve	Phase frequency curve
Blocking frequency f_{Sp} = 500 Hz Bandwidth f_{BB} = 500 Hz Notch depth K = -20 dB Reduction Abs = 0 dB	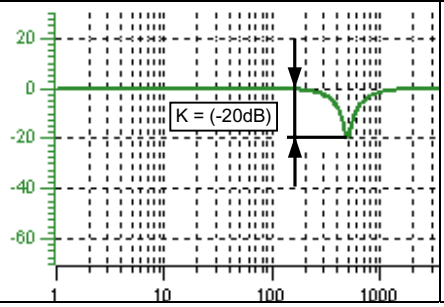	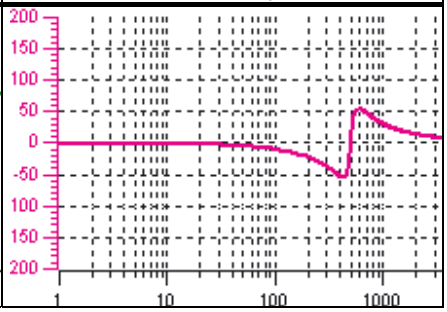

Simplified conversion to parameters for general order filters:

No reduction or increase after the blocking frequency

Defined notch at the blocking frequency K[dB] (e.g. -20 dB)

- Numerator natural frequency $f_Z = f_{Sp}$
- Numerator damping $D_Z = \frac{f_{BB}}{2 \bullet f_{Sp} \bullet 10^{\frac{K}{20}}}$
- Denominator natural frequency $f_N = f_{Sp}$
- Denominator damping $D_N = \frac{f_{BB}}{2 \bullet f_{Sp}}$

Band-stop with defined reduction

Table 7- 5 Example of band-stop

STARTER filter parameters	Amplitude log frequency curve	Phase frequency curve
Blocking frequency f_{SP} = 500 Hz Bandwidth f_{BB} = 500 Hz Notch depth K = -∞ dB Reduction ABS = -10 dB	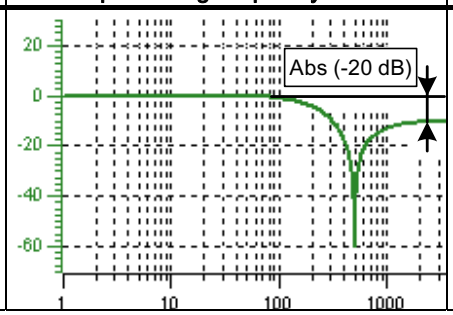	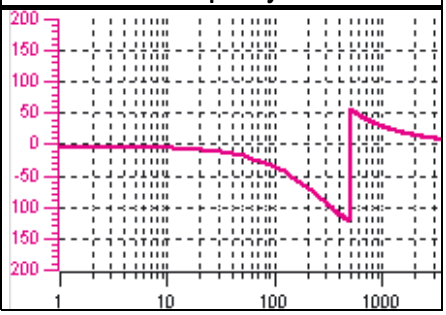

General conversion to parameters for general order filters:

- Numerator natural frequency $f_Z = \frac{\omega_Z}{2\pi} = f_{Sp}$
- Numerator damping $D_Z = 10^{\frac{K}{20}} \bullet \frac{1}{2} \bullet \sqrt{\left(1 - \frac{1}{10^{\frac{Abs}{20}}}\right)^2 + \frac{f_{BB}^{\ 2}}{f_{Sp}^{\ 2} \bullet 10^{\frac{Abs}{10}}}}$
- Denominator natural frequency $f_N = \frac{\omega_N}{2\pi} = f_{Sp} \bullet 10^{\frac{Abs}{40}}$
- Denominator damping $D_N = \frac{f_{BB}}{2 \bullet f_{Sp} \bullet 10^{\frac{Abs}{40}}}$

General low-pass with reduction

Table 7- 6 Example of general low-pass with reduction

STARTER filter parameters	Amplitude log frequency curve	Phase frequency curve
Characteristic frequency f_{Abs} = 500 Hz Damping D = 0.7 Reduction Abs = -10 dB	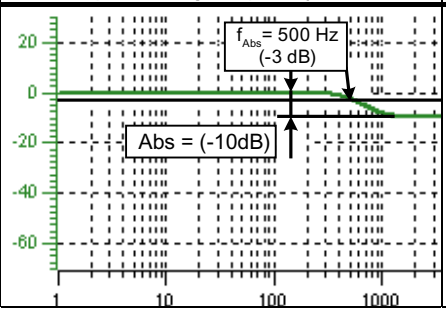	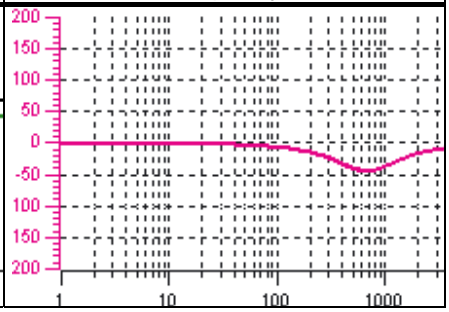

Conversion to parameters for general order filters:

- Numerator natural frequency $f_Z = f_{Abs}$ (start of reduction)
- Numerator damping $f_Z = \frac{f_{Abs}}{10^{\frac{Abs}{40}}}$
- Denominator natural frequency f_N
- Denominator damping D_N

Transfer function general 2nd order filter

$$H_{(s)} = \frac{\left(\frac{s}{2\pi f_Z}\right)^2 + \frac{2D_Z}{2\pi f_Z} \bullet s + 1}{\left(\frac{s}{2\pi f_N}\right)^2 + \frac{2D_N}{2\pi f_N} \bullet s + 1}$$

Numerator natural frequency f_Z

Numerator damping D_Z

Denominator natural frequency f_N

Denominator damping D_N

Table 7- 7 Example of general 2nd order filter

STARTER filter parameters	Amplitude log frequency curve	Phase frequency curve
Numerator frequency f_Z = 500 Hz Numerator damping D_Z = 0.02 dB Denominator frequency f_N = 900 Hz Denominator damping D_N = 0.15 dB	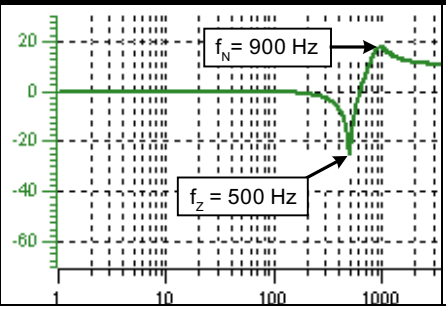	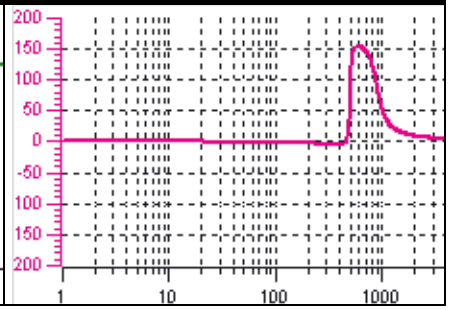

7.1.7.2 Integration

Parameterization

The "current setpoint filter" parameter screen is selected via the following icon in the toolbar of the STARTER commissioning tool:

Figure 7-13 STARTER icon for "current setpoint filter"

Function diagrams (see SINAMICS S110 List Manual)

- 5710 Current setpoint filters

Overview of important parameters (see SINAMICS S110 List Manual)

- p1656 Activates current setpoint filter
- p1657 Current setpoint filter 1 type
- p1658 Current setpoint filter 1 denominator natural frequency
- p1659 Current setpoint filter 1 denominator damping
- p1660 Current setpoint filter 1 numerator natural frequency
- p1661Current setpoint filter 1 numerator damping
- ...
- p1666 Current setpoint filter 2 numerator damping
- p1699 Filter data transfer

7.1.8 Note about the electronic motor model

A model change takes place within the speed range p1752*(100%-p1756) and p1752. With induction motors with encoder, the torque image is more accurate in higher speed ranges; the effect of the rotor resistance and the saturation of the main field inductance are corrected. With synchronous motors with encoder, the commutation angle is monitored.

7.1.9 V/f control for diagnostics

Description

With V/f control, the motor is operated with an open control loop and does require speed control or actual current sensing, for example. Operation is possible with a small amount of motor data.

V/f control can be used to check the following:

- Motor Module
- Power cable between the Motor Module and motor
- Motor
- DRIVE-CLiQ cable between the Motor Module and Motor
- Encoder and actual encoder value

The following motors can be operated with V/f control:

- Induction motors
- Synchronous motors

CAUTION
V/f control must only be used as a diagnostic function (e.g. to check that the motor encoder is functioning correctly).

Note

In V/f mode, the calculated actual speed value is always displayed in r0063. The speed of the encoder (if installed) is displayed in r0061. If an encoder is not installed, r0061 displays "0".

Note

The operation of synchronous motors with V/f control is allowed only at up to 25 % of the rated motor speed.

Structure of V/f control

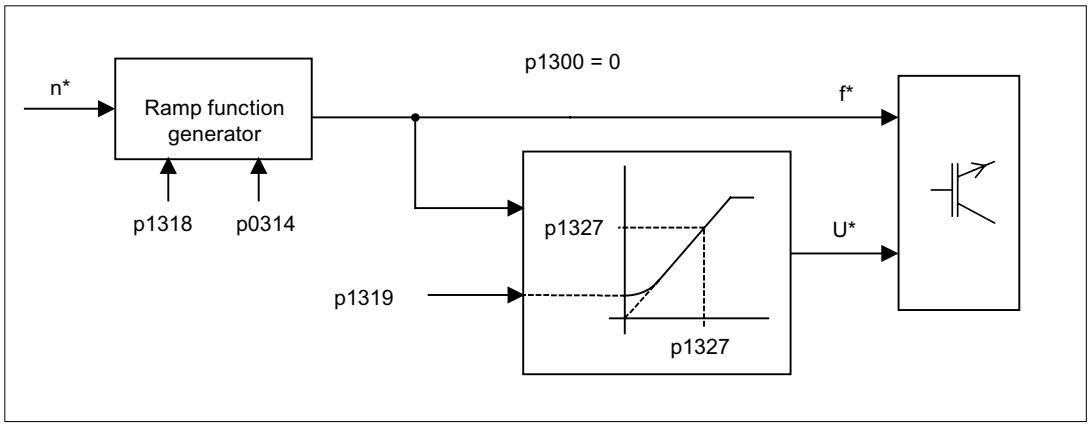

Figure 7-14 Structure of V/f control

Prerequisites for V/f control

1. First commissioning has been carried out:
   The parameters for V/f control have been initialized with appropriate values.
2. First commissioning has not been carried out:
   The following relevant motor data must be checked and corrected:
   – r0313 Motor pole pair number, actual (or calculated)
   – p0314 Motor pole pair number
   – p1318 V/f control ramp-up/ramp-down time
   – p1319 V/f control voltage at zero frequency
   – p1326 V/f control programmable characteristic frequency 4
   – p1327 V/f control programmable characteristic voltage 4

   V/f control can now be commissioned.

Note

With synchronous motors, V/f mode is normally only stable at low speeds. Higher speeds can induce vibrations.

Commissioning V/f control

1. Verify the preconditions for V/f control mode.
2. Set p0311 –> Rated motor speed
3. Set p1317 = 1 –> activates the function
4. Activate the enable signals for operation
5. Specify the speed setpoint –> evaluate the diagnostic function

V/f characteristic

The speed setpoint is converted to the frequency specification taking into account the number of pole pairs. The synchronous frequency associated with the speed setpoint is output (no slip compensation).

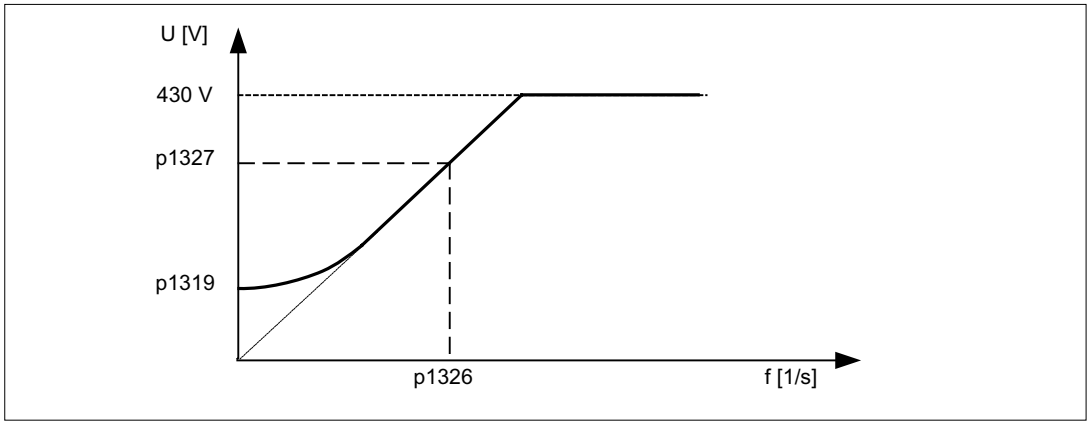

Figure 7-15 V/f characteristic

Function diagrams (see SINAMICS S110 List Manual)

- 5300 V/f control for diagnostics

Overview of important parameters (see SINAMICS S110 List Manual)

- p0304 Motor rated voltage
- p0310 Motor rated frequency
- p0311 Motor rated speed
- r0313 Motor pole pair number, actual (or calculated)
- p0314 Motor pole pair number
- p0322 Maximum motor speed
- p0323 Maximum motor current
- p0640 Current limit
- p1082 Maximum speed
- p1317 V/f control diagnostics activation
- p1318 V/f control ramp-up/ramp-down time
- p1319 V/f control voltage at zero frequency
- p1326 V/f control programmable characteristic frequency 4
- p1327 V/f control programmable characteristic voltage 4

7.1.10 Optimizing the current and speed controller

General information

⚠ CAUTION
Controller optimization may only be performed by skilled personnel with a knowledge of control engineering.

The following tools are available for optimizing the controllers:

- "Function generator" in STARTER
- "Trace" in STARTER
- "Measuring function" in STARTER
- Measuring sockets on the Control Unit

Optimizing the current controller

The current controller is initialized when the system is commissioned for the first time and is adequately optimized for most applications.

Optimizing the speed controller

The speed controller is set in accordance with the motor moment of inertia when the motor is configured for the first time. The calculated proportional gain is set to approximately 30% of the maximum possible gain in order to minimize vibrations when the controller is mounted on the mechanical system of the machine for the first time.

The integral time of the speed controller is always preset to 10 ms.

The following optimization measures are necessary in order to achieve the full dynamic response:

- Increase the proportional gain Kp_n (p1460)
- Change the integral action time Tn_n (p1462)

Automatic controller setting of the speed controller (frequency response analysis) in STARTER

- The automatic speed controller setting has the following features:
  - Section identification using FFT analysis
  - Automatic setting of filters in the current setpoint arm, e.g. for damping resonances
  - Automatic setting of the controller (amplification factor Kp, integral time Tn)
- The automatic controller settings can be verified with the measuring functions.

The "Automatic controller setting" parameter screen is selected with the icon in the toolbar of the STARTER commissioning tool:

Example of measuring the speed controller frequency response

By measuring the speed controller frequency response and the control system, critical resonance frequencies can, if necessary, be determined at the stability limit of the speed control loop and dampened using one or more current setpoint filters. This normally enables the proportional gain to be increased (e.g. Kp_n = 3* default value).

After the Kp_n value has been set, the ideal integral action time Tn_n (e.g. reduced from 10 ms to 5 ms) can be determined.

Example of speed setpoint step change

A rectangular step change can be applied to the speed setpoint via the speed setpoint step change measuring function. The measuring function has preselected the measurement for the speed setpoint and the torque-generating current.

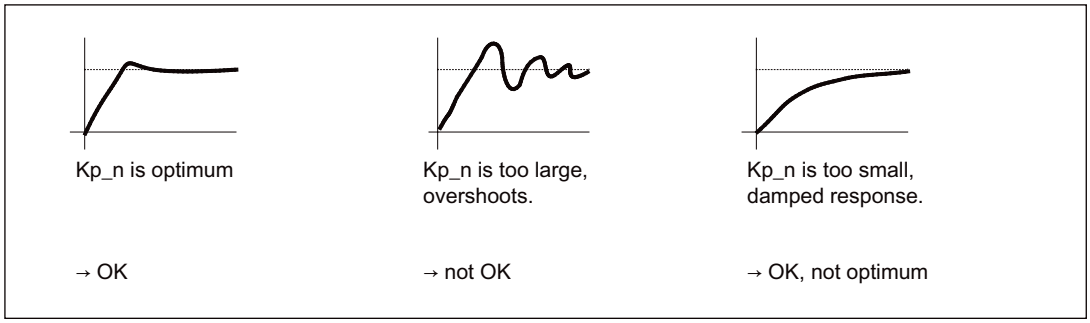

Figure 7-16 Setting the proportional gain Kp

Parameter overview

See "Speed controller".

7.1.11 Sensorless operation (without an encoder)

NOTICE
The operation of synchronous motors without an encoder must be verified in a test application. Stable operation in this mode cannot be guaranteed for every application. Therefore, the user will be solely responsible for the use of this operating mode.

Description

This allows operation without an encoder and mixed operation (with/without encoder). Encoderless operation with the motor model allows a higher dynamic response and greater stability than a standard drive with V/f control. Compared with a drive with an encoder, however, speed accuracy is lower and the dynamic response and smooth running features deteriorate.

Since the dynamic response in operation without an encoder is lower than in operation with an encoder, accelerating torque pre-control is implemented to improve the control dynamic performance. It controls, knowing the drive torque, and taking into account the existing torque and current limits as well as the load moment of inertia (motor moment of inertia: p0341*p0342 + load torque: p1498) the required torque for a demanded speed dynamic performance optimized from a time perspective.

Note

If the motor is operated with and without an encoder (e.g. p0491 not 0 or p1404 < p1082), the maximum current during operation without an encoder can be reduced via p0642 (reference value is p0640) in order to minimize interfering, saturation-related motor data changes during operation without an encoder.

A torque smoothing time can be parameterized via p1517 for the torque pre-control. The speed controller needs to be optimized for operation without an encoder due to the lower dynamic response. This can be carried out via p1470 (P gain) and p1472 (integral time).

In the low-speed range, the actual speed value, the orientation, and the actual flux can no longer be calculated during operation without an encoder due to the accuracy of the measured values and the parameter sensitivity of the technique. For this reason, an open-loop current/frequency control is selected. The switchover threshold is parameterized via p1755 and the hysteresis via p1756.

To accept a high load torque even in the open-loop controlled range, the motor current can be increased via p1612. To do so, the drive torque (e.g. friction torque) must be known or estimated. An additional reserve of approx. 20% should also be added. In synchronous motors, the torque is converted to the current via the motor torque constant (p0316). In the lower speed range, the required current cannot be measured directly on the Motor Module. The default setting is 50% (synchronous motor) or 80% (induction motor) of the motor rated current (p0305). When parameterizing the motor current (p1612), you must take into account the thermal motor load.

Note

Encoderless operation is not permitted for vertical axes or similar. Encoderless operation is not suitable for a higher-level closed-loop position control either.

The start behavior of synchronous motors from standstill can be improved further by parameterizing the pole position identification (p1982 = 1).

Behavior once pulses have been canceled

Once the pulses have been canceled in operation without an encoder, the current actual speed value of the motor can no longer be calculated. Once the pulses are enabled again, the system must search for the actual speed value.

p1400.11 can be used to parameterize whether the search is to begin with the speed setpoint (p1400.11 = 1) or with speed = 0.0 (p1400.11 = 0). Under normal circumstances, p1400.11 = 0 because the motor is usually started from standstill. If the motor is rotating faster than the changeover speed p1755 when the pulses are enabled, p1400.11 = 1 must be set.

If the motor is rotating and the start value for the search is as of the setpoint (p1400.11 = 1), the speed setpoint must be in the same direction as the actual speed before the pulses can

be enabled. A large discrepancy between the actual and setpoint speed can cause a malfunction.

> ⚠ **WARNING**
>
> Once the pulses have been canceled, no information about the motor speed is available. The computed actual speed value is then set to zero, which means that all actual speed value messages and output signals are irrelevant.

Switchover between closed-loop/open-loop operation and operation with/without encoder

Operation without an encoder is activated via parameter setting p1300 = 20. If p1300 = 20 or p1404 = 0, operation without an encoder is active across the entire speed range. If the speed value is less than the changeover speed p1755, the motor is operated in accordance with the current/frequency.

During operation with an encoder, a switchover can be made to operation without an encoder when the speed threshold p1404 is exceeded. If p1404 > 0 and p1404 < p1755, a switchover is not made to operation without an encoder until the speed exceeds p1755.

Operation without an encoder is displayed in parameter r1407.1.

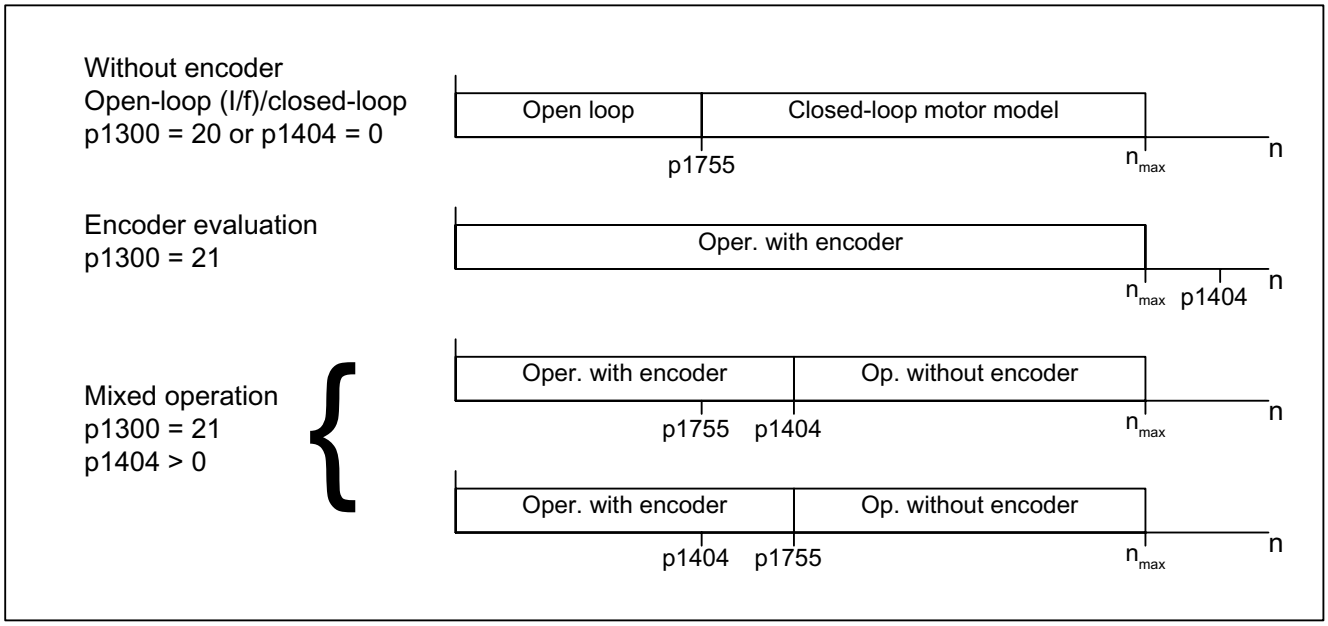

Figure 7-17 Area switchover

> **Note**
>
> In closed-loop control operating mode "Speed controller without encoder", a rotor position encoder is not required. Since a temperature monitor is not usually connected in this case either, this must be parameterized via p0600 = 0 (no sensor).

Series reactor

When high-speed special motors are used, or other low leakage induction motors, a series reactor may be required to ensure stable operation of the current controller.

The series reactor can be integrated via p0353.

Commissioning/optimization

1. Estimate the motor current p1612 on the basis of the mechanical conditions (I = M/kt).
2. Set Kn (p1470) and Tn (p1472) above I/f operation (> p1755). The load moment of inertia should be set to zero here (p1498 = 0), since this deactivates part of the torque pre-control.
3. Determine the load moment of inertia in the speed range above I/f operation (> p1755) by setting p1498 via a ramp response (e.g. ramp time 100 ms) and assessing the current (r0077) and model speed (r0063).

Function diagrams (see SINAMICS S110 List Manual)

- 5050 Kp_n-/Tn_n adaptation
- 5060 Torque setpoint, control type switchover
- 5210 Speed controller

Overview of important parameters (see SINAMICS S110 List Manual)

- p0341 Motor moment of inertia
- p0342 Ratio between the total moment of inertia and that of the motor
- p0353 Motor series inductance
- p0600 Motor temperature sensor for monitoring
- p0640 Current limit
- p0642 Encoderless current reduction
- p1300 Open-loop/closed-loop control operating mode
- p1400.11 Speed control configuration; encoderless operation actual speed value start value
- p1404 Encoderless operation changeover speed
- r1407.1 CO/BO: Status word speed controller; encoderless operation active
- p1470 Speed controller encoderless operation P-gain
- p1472 Speed controller encoderless operation integral-action time
- p1498 Load moment of inertia
- p1517 Accelerating torque smoothing time constant
- p1612 Current setpoint, open-loop control, encoderless
- p1755 Motor model without encoder, changeover speed
- p1756 Motor model changeover speed hysteresis

7.1.12 Motor data identification

7.1.12.1 Motor data identification

Description

Motor data identification (MotID) provides a means of determining motor data (of third-party motors, for example). The drive system must have been commissioned for the first time as basis for using MotID. To do this, either the electrical motor data (motor data sheet) or the rating plate data must be entered and the calculation of the motor/control parameters (p0340) must have been completed.

Commissioning involves the following steps:

- Enter the motor data or the rating plate data and the encoder data
- Complete calculation of the motor and control data as starting value for the MotID (p0340 = 3, if motor data, p0340 = 1, if rating plate data were entered)
- Carry out a static measurement (p1910)
- For synchronous motors: Carry out an angular commutation calibration (p1990) and if required, fine synchronization (refer to r1992)
- Carry out a rotating measurement (p1960)

  Before starting the rotating measurement, the speed controller setting should be checked and optimized (p1460, p1462 and p1470, p1472).

  It is preferable if the rotating MotID is carried out with the motor de-coupled from the mechanical system. This therefore means that only the motor moment of inertia is determined. The total moment of inertia with mechanical system can be subsequently identified with p1959 = 4 and p1960 = 1. The stress on the mechanical system can be reduced by parameterizing the ramp-up time (p1958) and/or using a speed limit (p1959.14/p1959.15) or using the current and speed limit. The higher the selected ramp-up time, the less accurate the moment of inertia determined.

  Note

  Completion of the individual identification runs can be read via parameters r3925 to r3928.

The enable signals OFF1, OFF2, OFF3 and "enable operation" remain effective and can be interrupt the motor identification routine.

If there is an extended setpoint channel (r0108.08 = 1), parameters p1959.14 = 0 and p1959.15 = 0 and a direction of rotation limit (p1110 or p1111) is active there, then this is observed at the instant of the start via p1960. For p1958 = -1, the ramp-up and ramp-down time of the setpoint channel (p1120 and p1121) are also used for the MotID.

Note

If a ramp-up/ramp-down time or one direction of rotation limit is activated, parts of the motor data identification routine cannot be carried out. For other parts of the motor data identification routine, the accuracy of the results is diminished because a ramp-up/ramp-down time is selected. If possible, p1958 should be 0 and no direction of rotation limit selected (p1959.14 = 1 and p1959.15 = 1).

⚠ DANGER

The stationary MotID can result in slight movement of up to 210 degrees electrical.

For the rotating motor data identification routine, motor motion is initiated, which can reach the maximum speed (p1082) and the motor torque corresponding to the maximum current (p0640).

The rotating measurement should be carried out with a motor running at no load (de-coupled from the mechanical system) in order to prevent damage/destruction to the load or be influenced by the load. If the motor cannot be de-coupled from the mechanical system, then the stress on the mechanical system can be reduced by parameterizing the ramp-up time (p1958) and/or using a speed limit (p1959.14/p1959.15) or using the current and speed limit.

If a mechanical distance limit has been set, you are advised not to carry out the rotating measurement.

The emergency OFF functions must be fully operational during commissioning.

To protect the machines and personnel, the relevant safety regulations must be observed.

Motor data

Motor data input requires the following parameters:

Table 7- 8 Motor data

Induction motor	Permanent-magnet synchronous motor
• p0304 Motor rated voltage • p0305 Motor rated current • p0307 Motor rated power • p0308 Motor rated power factor • p0310 Motor rated frequency • p0311 Motor rated speed • p0320 Motor rated magnetizing current • p0322 maximum motor speed • p0350 motor stator resistance, cold • p0353 motor series inductance • p0354 motor rotor resistance, cold • p0356 motor stator leakage inductance • p0358 motor rotor leakage inductance • p0360 motor magnetizing inductance • p0400ff encoder data	• p0305 Motor rated current • p0311 Motor rated speed • p0314 Motor pole pair number • p0316 motor torque constant • p0322 maximum motor speed • p0323 maximum motor current • p0341 Motor moment of inertia • p0350 motor stator resistance, cold • p0353 motor series inductance • p0356 motor stator leakage inductance • p0400ff encoder data

Rating plate data

Input of the rating plate data requires the following parameters:

Table 7- 9 Rating plate data

Induction motor	Permanent-magnet synchronous motor
• p0304 rated voltage • p0305 rated current • p0307 rated power • p0308 rated power factor (cos ϕ) • p0310 rated frequency • p0311 rated speed • p0322 maximum motor speed • p0353 motor series inductance • p0400ff encoder data	• p0304 rated voltage • p0305 rated current • p0307 rated power (alternative p0316) • p0311 rated speed • p0314 Motor pole pair number or p0315 Motor pole pair width • p0322 maximum motor speed • p0323 maximum motor current • p0353 motor series inductance • p0400ff encoder data

Since the rating plate data contains the initialization values for identification, you must ensure that it is entered correctly and consistently to enable the above data to be determined.

Parameters to control the MotID

The following parameters influence the MotID:

Table 7- 10 Parameters for control

Static measurement (motor data identification)	Rotating measurement
• p0640 Current limit • p1215 Motor holding brake configuration • p1909 Motor data identification control word • p1910 Motor data identification, stationary • p1959.14/.15 Positive/negative direction permitted*	• p0640 Current limit • p1082 Maximum speed • p1958 motor data identification ramp-up/ramp-down time • p1959 Rotating measurement configuration • p1960 Rotating measurement selection
Note: If a brake is being used and is operational (p1215 = 1, 3), then the stationary measurement with closed brake is carried out. If possible (e.g. no hanging/suspended axis), we recommend that the brake is opened before the MotID (p1215 = 2). This also means that the encoder size can be adjusted and the angular commutation calibrated. *The p1959 setting has the following effects on the rotational direction parameter p1821: Positive direction permitted, with setting p1821=0 means: Clockwise direction of rotation Negative direction permitted, with setting p1821=1 means: Counter-clockwise direction of rotation	

7.1.12.2 Motor data identification - induction motor

Induction motor

The data are identified in the gamma equivalent circuit diagram and displayed in r19xx. The motor parameters p0350, p0354, p0356, p0358 and p0360 taken from the MotID refer to the T equivalent circuit diagram of the induction machine and cannot be directly compared. This is the reason that an r parameter is listed in the table, which displays the parameterized motor parameters in the gamma equivalent circuit diagram.

Table 7- 11 Data determined using p1910 for induction motors (stationary measurement)

Determined data (gamma)	Data that are accepted (p1910 = 1)
r1912 identified stator resistance	p0350 motor stator resistance, cold + p0352 cable resistance
r1913 rotor time constant identified	r0384 motor rotor time constant/damping time constant, d axis
r1915 stator inductance identified	-
r1925 threshold voltage identified	-
r1927 rotor resistance identified	r0374 motor resistance cold (gamma) p0354
r1932 d inductance	r0377 motor leakage inductance, total (gamma) p0353 motor series inductance p0356 motor leakage inductance p0358 motor leakage inductance p1715 current controller P gain p1717 current controller integral action time
r1934 q inductance identified	-

Determined data (gamma)	Data that are accepted (p1910 = 1)
r1936 magnetizing inductance identified	r0382 motor main inductance, transformed (gamma) p0360 motor main inductance p1590 flux controller P gain p1592 flux controller integral action time
r1973 encoder pulse number identified	-
Note: The encoder pulse number is only determined very imprecisely and is only suitable for making rough checks (p0408). The sign is negative if inversion is required (p0410.0).	
-	p0410 encoder inversion actual value
Note: If the encoder inversion is changed using MotID, fault F07993 is output, which refers to a possible change in the direction of rotation and can only be acknowledged by p1910 = -2.	

Table 7- 12 Data determined using p1960 for induction motors (rotating measurement)

Determined data (gamma)	Data that are accepted (p1960 = 1)
r1934 q inductance identified	-
r1935 q inductance identification current	
Note: The q inductance characteristic can be used as basis to manually determine the data for the current controller adaptation (p0391, p0392 and p0393).	
r1936 magnetizing inductance identified	r0382 motor main inductance, transformed (gamma) p0360 motor main inductance p1590 flux controller P gain p1592 flux controller integral action time
r1948 magnetizing current identified	p0320 rated motor magnetizing current
r1962 saturation characteristic magnetizing current identified	-
r1963 saturation characteristic stator inductance identified	-
Note: The magnetic design of the motor can be identified from the saturation characteristic.	
r1969 moment of inertia identified	p0341 motor moment of inertia * p0342 ratio between the total moment of inertia and that of the motor + p1498 load moment of inertia
r1973 encoder pulse number identified	-
Note: The encoder pulse number is only determined very imprecisely and is only suitable for making rough checks (p0408). The sign is negative if inversion is required (p0410.0).	

7.1.12.3 Motor data identification - synchronous motor

Synchronous motor

Table 7- 13 Data determined using p1910 for synchronous motors (stationary measurement)

Determined data	Data that are accepted (p1910 = 1)
r1912 stator resistance identified	p0350 motor stator resistance, cold + p0352 cable resistance
r1925 threshold voltage identified	-
r1932 d inductance	p0356 motor stator leakage inductance + p0353 motor series inductance p1715 current controller P gain p1717 current controller integral-action time
r1934 q inductance identified	-
r1950 Voltage emulation error voltage values	p1952 Voltage emulation error, final value
r1951 Voltage emulation error, current values	p1953 Voltage emulation error, current offset
Note regarding r1950 to p1953: Active when the function module "extended torque control" is activated and activated compensation of the voltage emulation error (p1780.8 = 1).	
r1973 Encoder pulse number identified	-
Note: The encoder pulse number is only determined very imprecisely and is only suitable for making rough checks (p0408). The sign is negative if inversion is required (p0410.0).	
r1984 Pole position identification angular difference	p0431 Angular commutation offset
Note: r1984 indicates the difference of the angular commutation offset before being transferred into p0431.	
-	p0410 Encoder inversion actual value
Note: If the encoder inversion is changed using MotID, fault F07993 is output, which refers to a possible change in the direction of rotation and can only be acknowledged by p1910 = -2.	

Table 7- 14 Data determined using p1960 for synchronous motors (rotating measurement)

Determined data	Data that are accepted (p1960 = 1)
r1934 q inductance identified	-
r1935 q inductance identification current	-
Note: The q inductance characteristic can be used as basis to manually determine the data for the current controller adaptation (p0391, p0392 and p0393).	
r1937 torque constant identified	p0316 motor torque constant
r1938 voltage constant identified	p0317 motor voltage constant
r1939 reluctance torque constant identified	p0328 motor reluctance torque constant
r1947 optimum load angle identified	p0327 optimum motor load angle
r1969 moment of inertia identified	p0341 Motor moment of inertia * p0342 ratio between the total moment of inertia and that of the motor + p1498 load moment of inertia
r1973 Encoder pulse number identified	-
Note: The encoder pulse number is only determined very imprecisely and is only suitable for making rough checks (p0408). The sign is negative if inversion is required (p0410.0).	
r1984 Pole position identification angular difference	p0431 Angular commutation offset
Note: r1984 indicates the difference of the angular commutation offset before being transferred into p0431.	

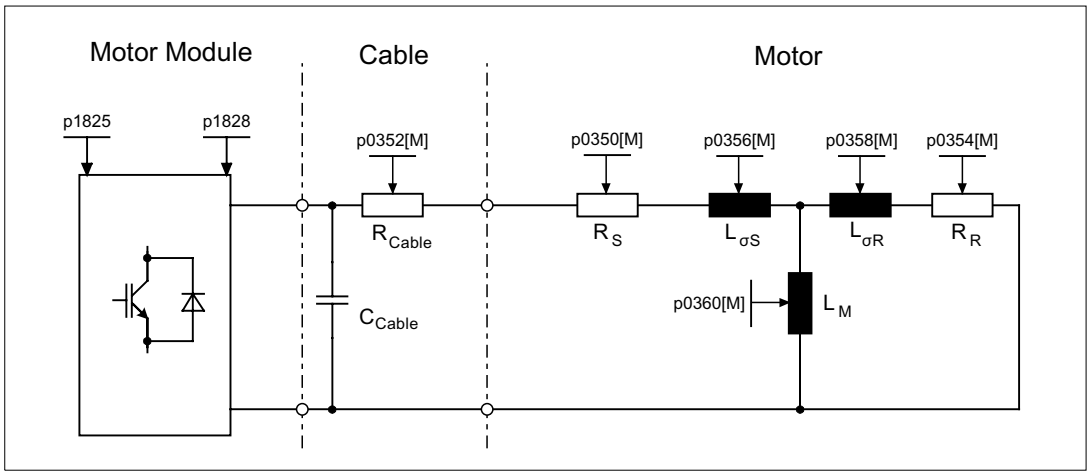

Figure 7-18 Equivalent circuit diagram for induction motor and cable

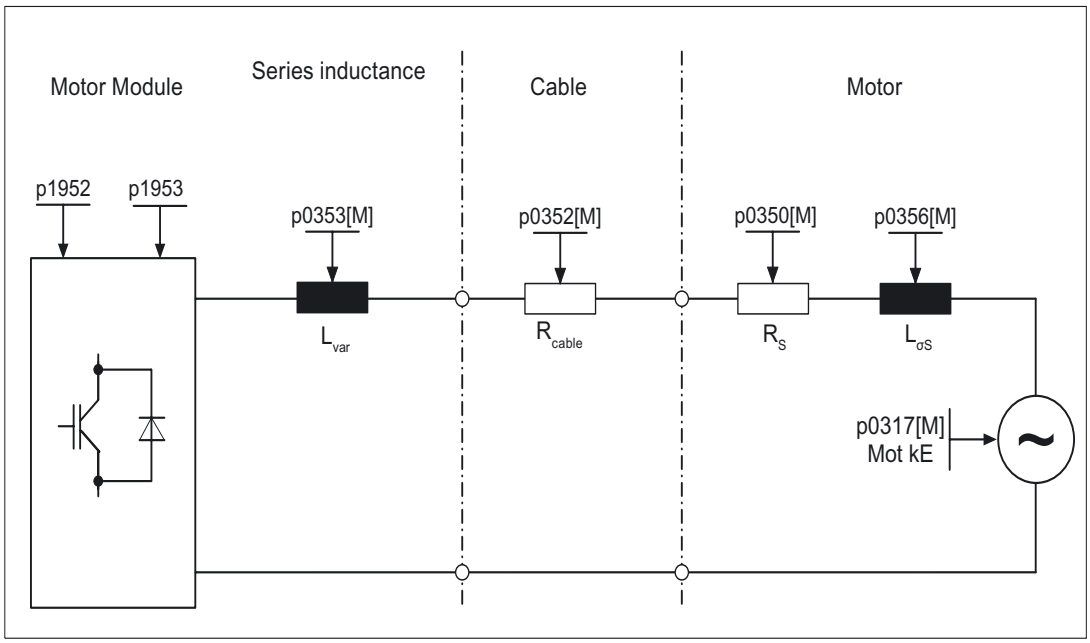

Figure 7-19 Equivalent circuit diagram for synchronous motor and cable

Overview of important parameters (see SINAMICS S110 List Manual)

- r0047 Status identification

Standstill measurement

- p1909 Motor data identification control word
- p1910 Motor data identification, stationary

Rotating measurement

- p1958 Motor data identification ramp-up/ramp-down times
- p1959 Rotating measurement configuration
- p1960 Rotating measurement selection

7.1.13 Pole position identification

Description

For synchronous motors, the pole position identification determines its electrical pole position, that is required for the field-oriented control. Generally, the electrical pole position is provided from a mechanically adjusted encoder with absolute information. In this case, pole position identification is not required. For the following encoder properties, pole position identification is not required:

- Absolute encoder (e.g. EnDat, DRIVE-CLiQ encoder)
- Encoder with C/D track and pole pair number ≤ 8
- Hall sensor
- Resolver with a multiple integer ratio between the motor pole pair number and the encoder pole pair number
- Incremental encoder with a multiple integer ratio between the motor pole pair number and the encoder pulse number

The pole position identification is used for:

- Determining the pole position (p1982 = 1)
- Determining the angular commutation offset during commissioning (p1990 = 1)
- Plausibility check for encoders with absolute information (p1982 = 2)

⚠ WARNING
When the motors are not braked, the motor rotates or moves as a result of the current impressed during the measurement. The magnitude of the motion depends on the magnitude of the current and the moment of inertia of the motor and load.

Notes regarding pole position identification

The relevant technique can be selected using parameter P1980. The following techniques are available for a pole position identification routine:

- Saturation-based 1st+ 2nd harmonics (p1980 = 0)
- Saturation-based 1st harmonics (p1980 = 1)
- Saturation-based, two-stage (p1980 = 4)
- Saturation-based (p1980 = 10)

The following supplementary conditions apply to the saturation-based motion technique:

- This technique can be used for both braked and non-braked motors.
- It can only be used for a speed setpoint = 0 or from standstill.
- The specified current magnitudes (p0325, p0329) must be sufficient to provide a significant measuring result.

- For motors without iron, the pole position cannot be identified using the saturation-based technique.
- With 1FK7 motors, two-stage procedures must not be used (p1980 = 4). The value in p0329, which is set automatically, must not be reduced.

For the motion-based technique, the following supplementary conditions apply:

- The motor must be free to move and it may not be subject to external forces (no hanging/suspended axes)
- It can only be used for a speed setpoint = 0 or from standstill.
- If there is a motor brake, then this must be open (p1215 = 2).
- The specified current magnitude (p1993) must move the motor by a sufficient amount.

⚠ WARNING
Before using the pole position identification routine, the control sense of the speed control loop must be corrected (p0410.0). For rotating motors, in encoderless operation with a small positive speed setpoint (e.g. 10 RPM), the speed actual value (r0061) and the speed setpoint (r1438) must have the same sign.

Pole position determination with zero marks

The pole position identification routine provides coarse synchronization. If zero marks exist, the pole position can be automatically compared with the zero mark position once the zero mark(s) have been passed (fine synchronization). The zero mark position must be either mechanically or electrically (p0431) calibrated. If the encoder system permits this, then we recommend fine synchronization (p0404.15 = 1). This is because it avoids measurement spread and allows the determined pole position to be additionally checked.

Suitable zero marks are:

- One zero mark in the complete traversing range
- Equidistant zero marks whose relevant position to the commutation are identical
- Distance-coded zero marks

Determining a suitable technique for the pole position identification routine

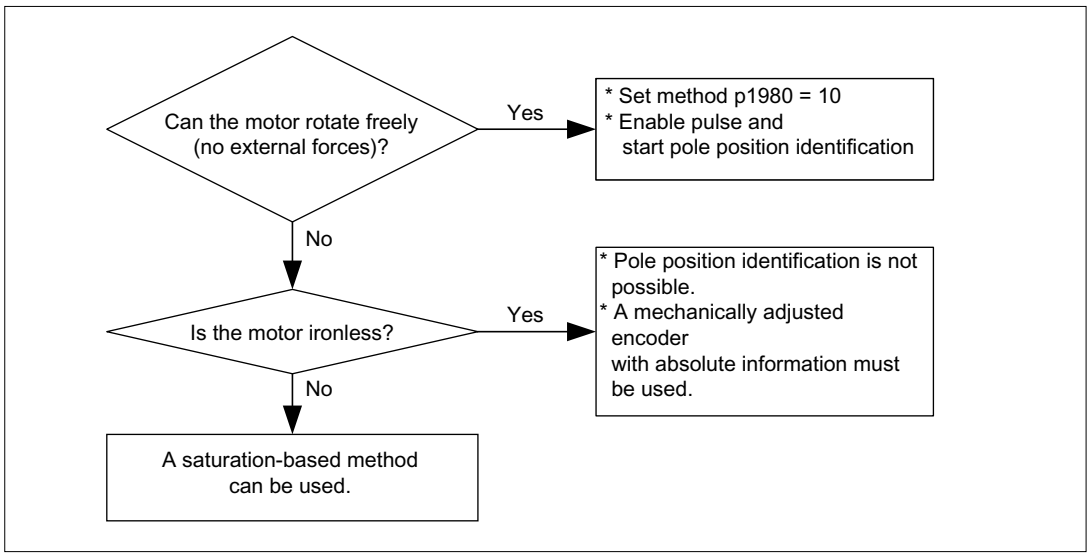

Figure 7-20 Selecting the appropriate technique

Angular commutation offset commissioning support (p1990)

The function for determining the commutation angle offset is activated via p1990=1. The commutation angle offset is entered in p0431. This function can be used in the following cases:

- Single calibration of the pole position for encoders with absolute information (exception: The Hall sensor must always be mechanically adjusted.)
- Calibrating the zero mark position for fine synchronization

Table 7- 15 Mode of operation of p0431

	Incremental without zero mark	Incremental with one zero mark	Incremental with distance-coded zero marks	Absolute encoder
C/D track	p0431 shifts the commutation with respect to the C/D track	p0431 shifts the commutation with respect to the C/D track and zero mark	Currently not available	Not permitted
Hall sensor	p0431 does not influence the Hall sensor. The Hall sensor must be mechanically adjusted.	p0431 does not influence the Hall sensor. p0431 shifts the commutation with respect to the zero mark	p0431 does not influence the Hall sensor. p0431: shifts the commutation with respect to the absolute position (after two zero marks have been passed)	Not permitted
Pole position identification	p0431 no effect	p0431 shifts the commutation with respect to the zero mark	p0431: shifts the commutation with respect to the absolute position (after two zero marks have been passed)	p0431 shifts the commutation with respect to absolute position

Note

When fault F07414 occurs, p1990 is automatically started; if p1980 is not equal to 99 and p0301 does not refer to a catalog motor with an encoder that is adjusted in the factory.

Overview of important parameters (see SINAMICS S110 List Manual)

- p0325[0...n] Motor pole position identification current 1st phase
- p0329[0...n] Motor pole position identification current
- p0404.15 Commutation with zero mark
- p0431 Angular commutation offset
- p1980[0...n] Pole position identification procedure
- p1981[0...n] Pole position identification maximum movement
- p1982[0...n] Pole position identification selection
- p1983 Pole position identification test
- r1984 Pole position identification angular difference
- r1985 Pole position identification saturation curve
- r1987 Pole position identification trigger curve
- p1990 Pole position identification commutation angle offset commissioning
- r1992 Pole position identification diagnostics
- p1993 Pole position identification current, motion based
- p1994 Pole position identification rise time motion based
- p1995 Pole position identification motion based P gain
- p1996 Pole position identification motion based integral action time
- p1997 Pole position identification motion based smoothing time

7.1.14 Vdc control

Description

Vdc control can be activated if overvoltage or undervoltage is present in the supply voltage. This prevents a fault from occurring due to the supply voltage and ensures that the drive is always ready to use.

This function is activated by means of the configuration parameter (p1240). It can be activated if an overvoltage or undervoltage is present. The torque limit of the motor at which the Vdc controller is active can be affected if discrepancies in the supply voltage are significant enough. The motor may no longer be able to maintain its setpoint speed or the acceleration/braking phases could be prolonged.

The Vdc controller is an automatic P controller that influences the torque limits. It only intervenes when the supply voltage approaches the "upper threshold" (p1244) or "lower threshold" (p1248) and the corresponding controller is activated via the configuration parameter (p1240).

An application for the Vdc controller is, for example, as a safety measure in the event of a power failure (Vdc_min and Vdc_max controller).

Description of Vdc_min control (p1240 = 2, 3)

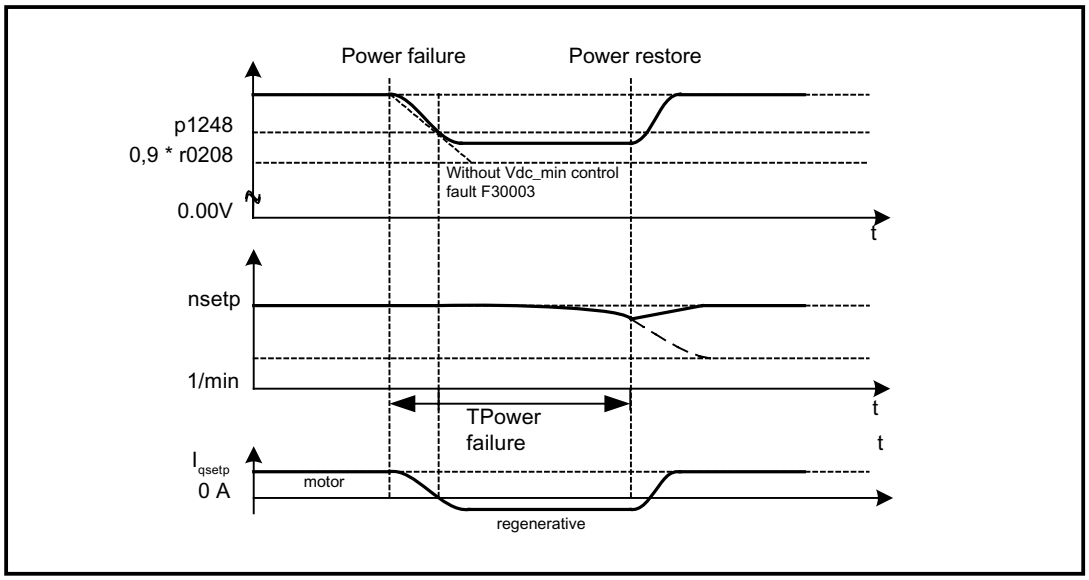

Figure 7-21 Switching Vdc_min control on/off (kinetic buffering)

In the event of a power failure, the Power Module will no longer be able to maintain the supply voltage, in particular if the motor is drawing active power. To maintain the supply voltage in the event of a power failure (e.g. for a controlled emergency retraction), the Vdc_min controller can be activated for the drive. If the voltage threshold set in p1248 is undershot, this drive will be decelerated so that its kinetic energy can be used to maintain the supply voltage. The threshold should be considerably higher than the trip threshold of the motor (recommendation: 50 V below the supply voltage). When the power supply is restored, the Vdc controller is automatically deactivated and the drive will ramp back up to the speed

setpoint. If the supply voltage cannot be restored, the power supply will fail once the kinetic energy of the drive has been exhausted with an active Vdc_min controller.

Note

You must make sure that the converter is not disconnected from the power supply. It could become disconnected, for example, if the line contactor drops out. The line contactor would need to have an uninterruptible power supply (UPS), for example.

Description of Vdc_min control without braking (p1240 = 8, 9)

As with p1240 = 2, 3, however, active motor braking can be prevented by a reduction in the supply voltage. The effective upper torque limit must not be less than the torque limit offset (p1532). The motor does not switch to regenerative mode and no longer draws any active power from the DC link.

Description of Vdc_max control (p1240 = 1, 3)

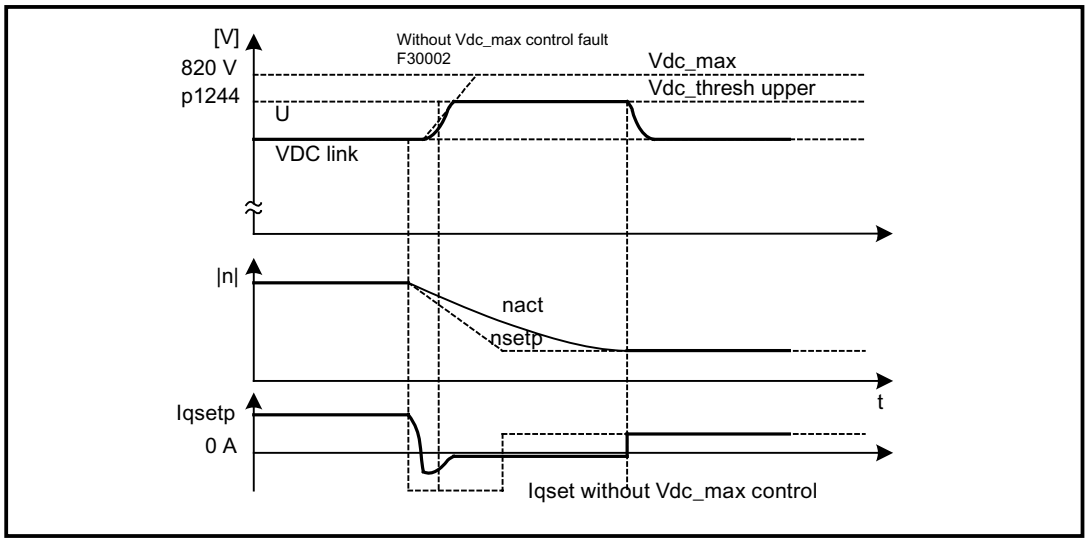

Figure 7-22 Switching-in/switching-out the Vdc_max control

In the event of a power failure, the voltage can increase until it reaches the shutdown threshold when the drive is decelerated. The Vdc_max controller can be activated to prevent the system from shutting down due to overvoltage. The Vdc_max controller is normally activated for drives that have to decelerate/accelerate high levels of kinetic energy themselves. When the overvoltage threshold in p1244 is reached (recommended setting: 50 V higher than the supply voltage), the braking torque of the drive with an active Vdc_max controller is reduced by shifting the torque limit. In this way, the drive feeds back the same amount of energy that is assimilated as a result of losses or consumers, thereby minimizing the braking time.

Description of Vdc_max control without acceleration (p1240 = 7, 9)

As with p1240 = 1, 3, if the drive must not be accelerated by means of an increase in the supply voltage, acceleration can be prevented by setting p1240 = 7, 9. The effective lower torque limit must not be greater than the torque limit offset (p1532).

Description of Vdc controller monitoring functions (p1240 = 4, 5, 6)

In the event of a power failure, the supply voltage can increase until it reaches the shutdown threshold when the drive is decelerated. To ensure that uncritical drives do not attempt to draw power from the supply voltage in the event of a power failure, such drives can be switched off by a fault (F07404) with a parameterizable voltage threshold (p1244). This is carried out by activating the Vdc_max monitoring function (p1240 = 4, 6).

Function diagrams (see SINAMICS S110 List Manual)

- 5650 Vdc_max controller and Vdc_min controller

Overview of important parameters (see SINAMICS S110 List Manual)

Adjustable parameters

- p1240 Vdc controller or Vdc monitoring configuration
- p1244 DC link voltage threshold, upper
- p1248 DC link voltage threshold, lower
- p1250 Vdc controller proportional gain

Display parameters

- r0056.14 Vdc_max controller active
- r0056.15 Vdc_min controller active

7.1.15 Dynamic Servo Control (DSC)

Description

The function Dynamic Servo Control" (DSC) is a closed-loop control structure which is computed in a fast speed controller clock cycle and is supplied with setpoints by the control in the position controller clock cycle.

This allows higher position controller gain factors to be achieved.

The following prerequisites are necessary to use the "Dynamic Servo Control" function:

- n-set mode
- Isochronous PROFIBUS-DP
- The position controller gain factor (KPC) and the position deviation (XERR) must be included in the PROFIBUS-DP setpoint telegram (refer to p0915).
- The position actual value must be transferred to the master in the actual value telegram of PROFIBUS-DP via the encoder interface Gx_XIST1.
- When DSC is activated, the speed setpoint N_SOLL_B from the PROFIBUS DP telegram is used as speed pre-control value.
- The internal quasi position controller uses the position actual value from the motor measuring system (G1_XIST1) or the position actual value from the additional encoder system (free telegrams).

Further PZD data telegram types can be used with the telegram extension. It must then be ensured that SERVO supports a maximum of 16 PZD setpoints and 19 PZD actual values.

Note

Synchronization is required on the control side and on the drive side for the operation of DSC.

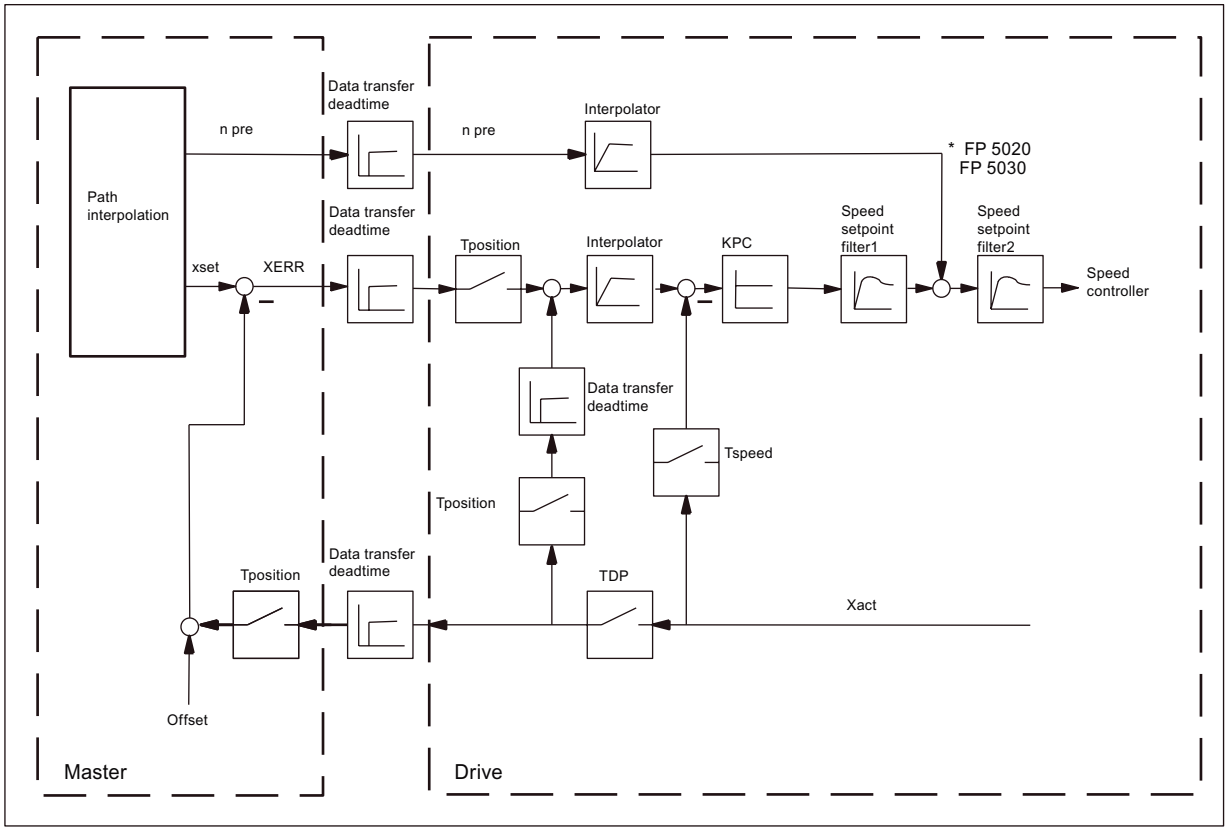

Figure 7-23 Control principle using DSC

Activating

If the prerequisites for DSC are met, the DSC structure is activated through a logical combination of the parameters p1190 "DSC position deviation XERR" and p1191 "DSC position controller gain KPC" through a selected suitable PROFIdrive telegram.
If KPC = 0 is issued, only speed control with the speed pre-control value (p1430, typically N_SOLL_B) can be used. Position controlled operation requires a transfer of KPC > 0.

When DSC is activated, it is recommended to use a new setting for the position controller gain KPC in the master.

When DSC is activated, the channels p1155 and p1160 for the position setpoint values as well as the channel for the extended setpoint value are not used.

The p1430 value for speed pre-control is still taken into account.

Deactivating

If both KPC = 0 (p1191=0) and XERR = 0 (p1190 = 0) are set, the DSC structure is dissolved and the "DSC" function is deactivated. In this case, only the value from p1430 from speed pre-control is taken into account.

Since it is possible to set higher gain factors using DSC, the control loop can become unstable when DSC is disabled. For this reason, before deactivating DSC, the value for KPC in the master must be reduced.

Speed setpoint filter

A speed setpoint filter to smoothen the speet setpoint steps is no longer required when DSC is active.

When using the "DSC" function, it only makes sense to use speed setpoint filter 1 to support the position controller, e.g. to suppress resonance effects.

External encoder systems (except motor encoder)

If, with DSC active, an external encoder is to be used, this requires the selection of a telegram with additional encoder actual values: Free telegrams.

For optimum control in DSC mode, the same encoders must be used for the controller (Master) and the drive via the parameter p1192 "DSC encoder selection".

Since the motor encoder is no longer used in this case, the adaptation factor for the conversion of the selected encoder system into the motor encoder system is determined using parameter p1193 "DCS encoder adaptation factor". The factor represents the ratio of the pulse difference between the motor encoder and the used encoder for the same reference distance.

The effect of the parameters p1192 and p1193 is illustrated in function diagram 3090.

Diagnostics

Via the parameter r1407.4 = 1 it can be indicated whether the speed setpoint of DSC is used.

Preconditions for the indication:

- p1190 and p1191 must be connected to a signal source with a value of > 0 (DSC structure activated).
- OFF1, OFF2 and OFF3 must not be active.
- The motor data identification must not be active.
- Master control must not be active.

The "DSC" function cannot be active under the following conditions:

- Isochronous mode has not been selected (r2054 not equal to 4)
- PROFIBUS is not isochronous (r2064[0] not equal to 1)
- On the control side, DSC is not active, which causes the value of KPC =0 to be transmitted to p1191.

Function diagrams (see SINAMICS S110 List Manual)

- 2420 PROFIdrive standard telegrans and process data
- 2422 Vendor-specific telegrams and process data
- 3090 Dynamic Servo Control (DSC)
- 5020 Speed setpoint filter and speed pre-control
- 5030 Reference model

Overview of important parameters (see SINAMICS S110 List Manual)

- p1190 CI: DSC position deviation XERR
- p1191 CI: DSC position controller gain KPC
- p1192[D] DSC encoder selection
- p1193[D] DSC encoder adaptation factor
- r1407.4 CO/BO: Status word, velocity controller

7.1.16 Travel to fixed stop

Description

This function can be used to move a motor to a fixed stop at a specified torque without a fault being signaled. When the stop is reached, the specified torque is built up and remains applied.

The desired torque derating is brought about by scaling the upper/motor-mode torque limit and the lower/regenerative-mode torque limit.

Application examples

- Screwing parts together with a defined torque.
- Moving to a mechanical reference point.

Signals

When PROFIBUS telegrams 2 to 4 are used, the following are automatically interconnected:

- Control word 2, bit 8
- Status word 2, bit 8

Also with PROFIdrive telegrams 102 and 103:

- Message word, bit 1
- Process data M_red to the scaling of the torque limit

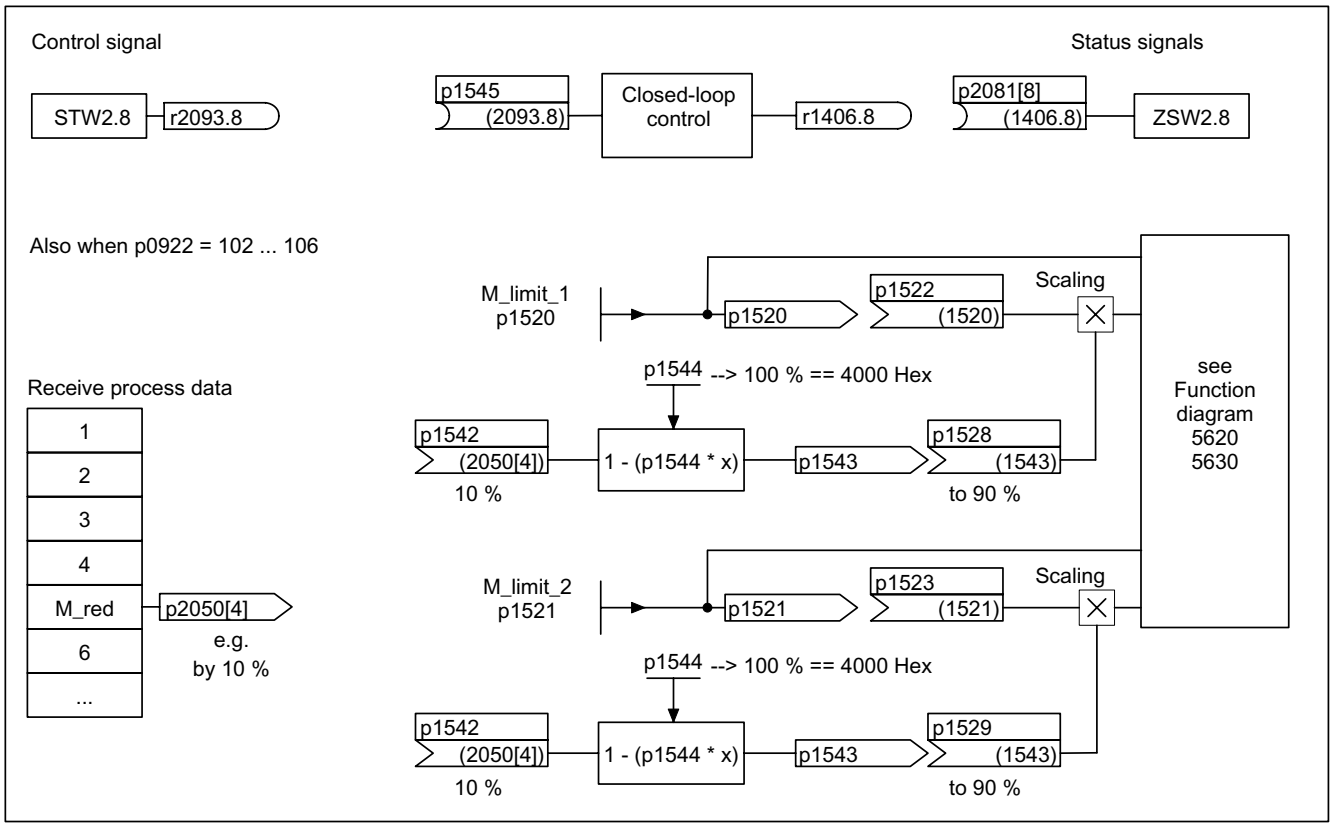

Figure 7-24 Signals for "Travel to fixed stop"

When PROFIdrive telegrams 2 to 4 are used, no torque reduction is transmitted. When the "Travel to fixed stop" function is activated, the motor ramps up to the torque limits specified in p1520 and p1521. If the torque has to be reduced, telegrams 102 and 103, for example, can be used for transmission. Another option would be to enter a fixed value in p2900 and interconnect it to the torque limits p1528 and p1529.

Signal chart

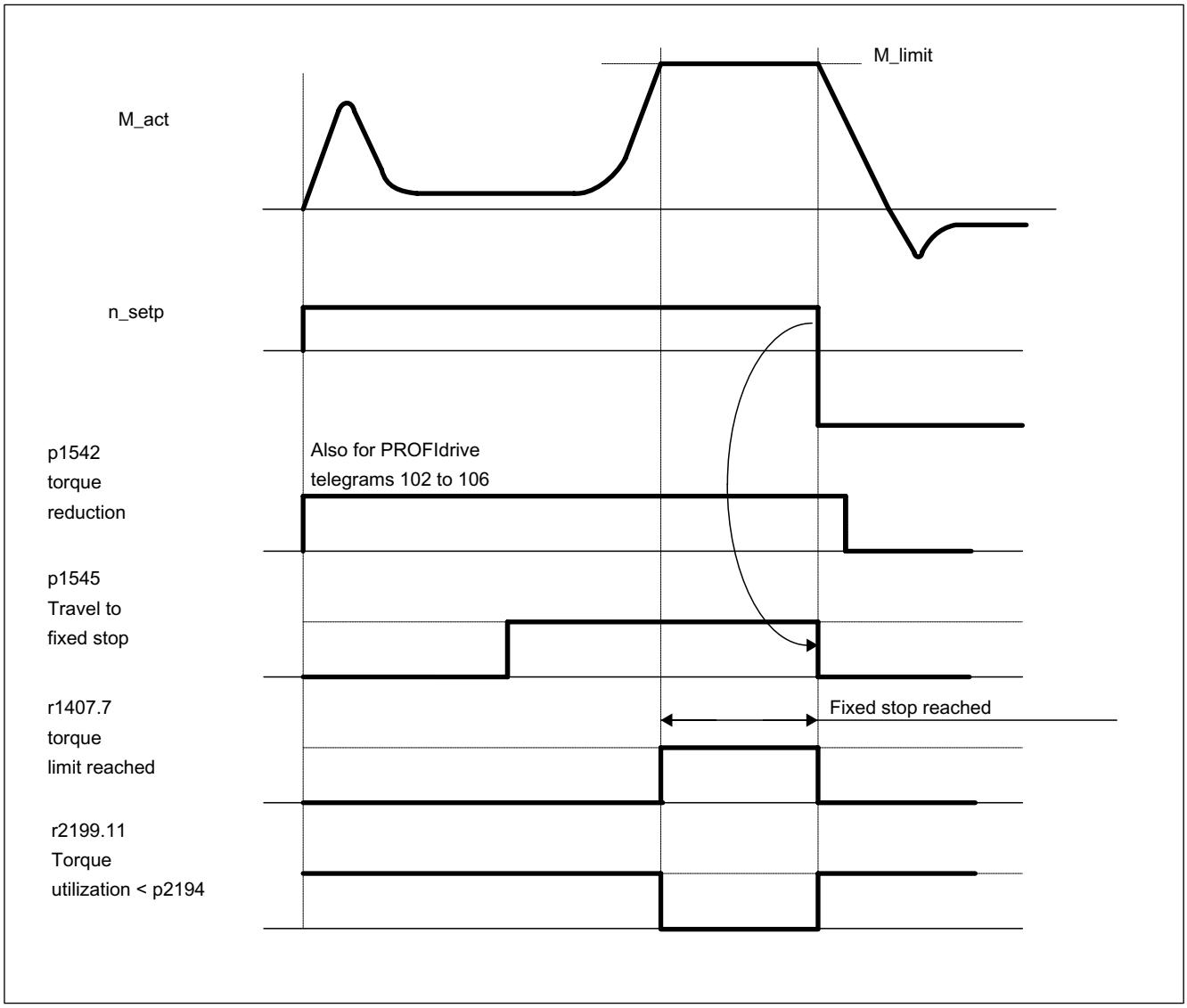

Figure 7-25 Signal chart for "Travel to fixed stop"

Commissioning for PROFIdrive telegrams 2 to 4

1. Activate travel to fixed stop.
   Set p1545 = "1".
2. Set the required torque limit.

   Example:
   p1400.4 = "0" —> upper or lower torque limit
   p1520 = 100 Nm —> effective in upper positive torque direction
   p1521 = –1500 Nm —> effective in lower negative torque direction
3. Run motor to fixed stop.

   The motor runs at the set torque until it reaches the stop and continues to work against the stop until the torque limit has been reached, this status being indicated in status bit

   r1407.7 "Torque limit reached".

Control and status messages

Table 7- 16 Control: Travel to fixed stop

Signal name	Internal control word STW n_ctrl	Binector input	PROFIdrive p0922 and/or p2079
Activate travel to fixed stop	8	p1545 Activate travel to fixed stop	STW2.8

Table 7- 17 Status message: Travel to fixed stop

Signal name	Internal status word	Parameter	PROFIdrive p0922 and/or p2079
Travel to fixed stop active	-	r1406.8	ZSW2.8
Torque limits reached	ZSW n_ctrl.7	r1407.7	ZSW1.11 (inverted)
Torque utilization < torque threshold value 2	ZSW monitoring functions 3.11	r2199.11	MESSAGEW.1

Function diagrams (see SINAMICS S110 List Manual)

- 5610 Torque limiting/reduction/interpolator
- 5620 Motor/generator torque limit
- 5630 Upper/lower torque limit
- 8012 Torque messages, motor blocked/stalled

Overview of important parameters (see SINAMICS S110 List Manual)

- p1400[0...n] Speed control configuration
- r1407.7 BO: Torque limit reached
- p1520[0...n] CO: Torque limit, upper/motoring
- p1521[0...n] CO: Torque limit, lower/regenerative
- p1522[0...n] CI: Torque limit, upper/motoring
- p1523[0...n] CI: Torque limit, lower/regenerative
- r1526 Torque limit, upper/motoring without offset
- r1527 Torque limit, lower/regenerative without offset
- p1532[0...n] Torque limit offset
- p1542[0...n] CI: Travel to fixed stop, torque reduction
- r1543 CO: Travel to fixed stop, torque scaling
- p1544 Travel to fixed stop, evaluate torque reduction
- p1545[0...n] BI: Activate travel to fixed stop
- p2194[0...n] Torque threshold 2
- p2199.11 BO: Torque utilization < torque threshold value 2

7.1.17 Vertical axes

Description

With a vertical axis without mechanical weight compensation, electronic weight compensation can be set by offsetting the torque limits (p1532). The torque limits specified in p1520 and p1521 are shifted by this offset value.

The offset value can be read in r0031 and transferred in p1532.

To reduce compensation once the brake has been released, the torque offset can be interconnected as a supplementary torque setpoint (p1513). In this way, the holding torque is set as soon as the brake has been released.

Function diagrams (see SINAMICS S110 List Manual)

- 5060 Torque setpoint, control type switchover
- 5620 Motor/generator torque limit
- 5630 Upper/lower torque limit

Overview of important parameters (see SINAMICS S110 List Manual)

- r0031 Actual torque smoothed
- p1513 CI: Supplementary torque 2
- p1520 CO: Torque limit, upper/motoring
- p1521 CO: Torque limit, lower/regenerative
- p1532 CO: Torque limit, offset

7.1.18 Variable signaling function

Description

The variable signaling function can be used to monitor BICO sources and parameters (with the attribute traceable) for violation of an upper or lower threshold (p3295).

A hysteresis (p3296) can be specified for the threshold value and a pull-in or drop-out delay (p3297/8) can be specified for the output signal (p3294).

The setting of a hysteresis results in a tolerance band around the threshold value. If the upper threshold value is exceeded the output signal is set to 1, if it drops below the lower threshold value the output signal is reset to 0.

After the configuration is completed, the variable signaling function must be activated with p3290.0.

Example 1:

Heating should be switched on depending on the temperature. For this the analog signal of an external sensor is connected with the variable signaling function. A temperature threshold and a hysteresis is defined to prevent the heating from switching on and off constantly.

Example 2:

A process variable pressure is to be monitored, whereby a temporary overpressure is tolerated. For this the output signal of an external sensor is connected with the variable signaling function. The pressure thresholds and a pull-in delay are set as tolerance time.

When the output signal of the variable signaling function is set, bit 5 in message word MELDW is set during cyclic communication. The message word MELDW is a component of the telegrams 102, 103, 110, 111.

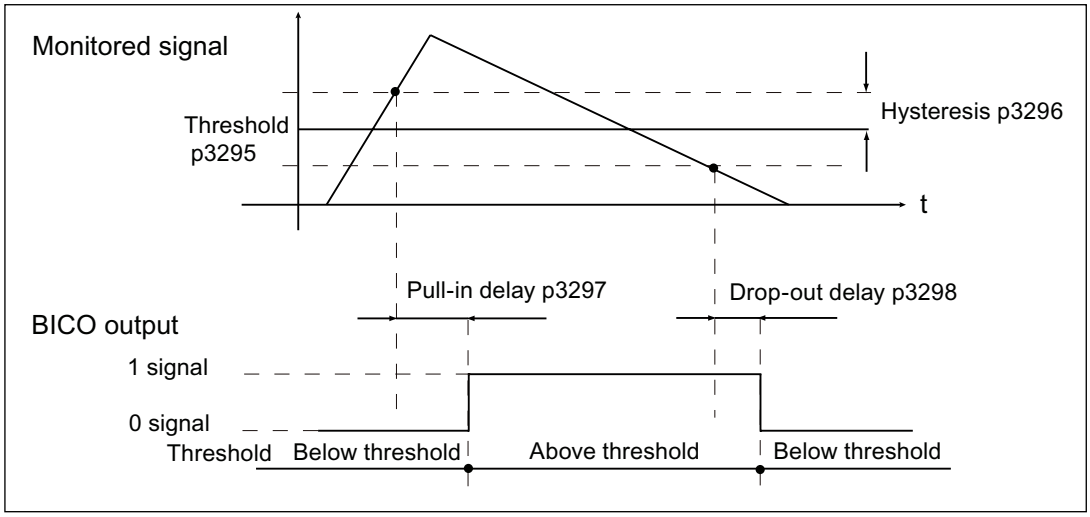

Figure 7-26 Variable signaling function

Function diagram (see SINAMICS S110 List Manual)

- 5301 Servo control - variable signaling function

Overview of important parameters (see SINAMICS S110 List Manual)

- p3290 Start variable signaling function
  Bit 0 = 0: Stop variable signaling function (default)
  Bit 0 = 1: Start variable signaling function with current parameter settings
  Bit 1 = 0: Compare without sign
  Bit 1 = 1: Compare with sign (default)
- p3291 Variable signaling function signal source
  BICO source, with which the connector parameters or parameters with the attribute traceable can be connected.
- p3292 Variable signaling function signal source address
  Set the address of the signal source for the variable signaling function
- p3293 Variable signaling function signal source data type
  Set the data type of the signal source for the variable signaling function
- p3294 Variable signaling function output signal
  Display the output signal for the variable signaling function.
  Specify the signal source (binector parameter), individual bits can be interconnected.
- p3295 Variable signaling function threshold value
  Set the threshold value for the variable signaling function.
- p3296 Variable signaling function hysteresis
  Set the hysteresis for the variable signaling function.
- p3297 Variable signaling function pull-in delay [ms]
  Set the pull-in delay for the variable signaling function.
  The output signal is set if the condition for a 1 signal is fulfilled for a longer period than the programmed pull-in delay.
- p3298 Variable signaling function drop-out delay [ms]
  Set the drop-out delay for the variable signaling function.
  The output signal is reset if the condition for a 0 signal is fulfilled for a longer period than the programmed drop-out delay.

Note:

The variable signaling function works with an accuracy of 8 ms (also to be taken into account for pull-in and drop-out delay).

7.2 Basic functions

7.2.1 Changing over units

Description

By changing over the units, parameters and process quantities for input and output can be changed over to an appropriate system of units (US units or as per unit quantities (%)).

The following supplementary conditions apply when changing over units:

- Parameters of the rating plate of the drive converter or the motor rating plate can be changed over between SI/US units; however, a per unit representation is not possible.
- After changing over the units parameter, all parameters that are assigned to one of the units group dependent on it, are all changed over to the new system of units.
- A parameter is available to select technological units (p0595) to represent technological quantities in the technology controller.
- If the units are converted to per unit quantities and the reference quantity changed, the percentage value entered in a parameter is not changed.
  Example:
  - A fixed speed of 80% corresponds, for a reference speed of 1500 RPM, to a value of 1200 RPM.
  - If the reference speed is changed to 3000 RPM, then the value of 80% is kept and now means 2400 RPM.

Restrictions

- When a unit changeover occurs, rounding to the decimal places is carried out. This can lead to the original value being changed by up to one decimal place.
- If a referenced form is selected and the reference parameters (e.g. p2000) are changed retrospectively, the referenced values of some of the control parameters are also adjusted to ensure that the control behavior is unaffected.
- If the reference variables (p2000 to p2007) are changed offline in STARTER, there is a risk that the parameter value ranges will be violated. In this case, appropriate fault messages will be displayed when the parameters are loaded to the drive units.

Groups of units

Every parameter that can be changed over is assigned to a units group, that, depending on the group, can be changed over within certain limits.

This assignment and the unit groups for each parameter are listed in the parameter list in the SINAMICS S110 List Manual.

The units groups can be individually switched via the following parameters: p0100, p0505 and p0595

Function in STARTER

To call up the function for converting units in STARTER, choose Drive object -> Configuration -> Units. The reference parameters can be found under Drive object -> Configuration -> Reference parameters

Overview of important parameters (see SINAMICS S110 List Manual)

- p0010 Commissioning parameter filter
- p0100 Motor Standard IEC/NEMA
- p0505 Selecting the system of units
- p0595 Selecting technological units
- p0596 Reference quantity, technological units
- p2000 CO: Reference frequency/speed
- p2001 CO: Reference voltage
- p2002 CO: Reference current
- p2003 CO: Reference torque
- r2004 CO: Reference power
- p2005 CO: Reference angle
- p2007 CO: Reference acceleration

7.2.2 Reference parameters/normalizations

Description

Reference values, corresponding to 100%, are required for the statement of units as percentages. These reference values are entered in parameters p2000 to p2007. They are computed during the calculation through p0340 = 1 or in STARTER during drive configuration. After calculation in the drive, these parameters are automatically protected via p0573 = 1 from boundary violation through a new calculation (p0340). This eliminates the need to adjust the references values in a PROFIdrive controller whenever a new calculation of the reference parameters via p0340 takes place.

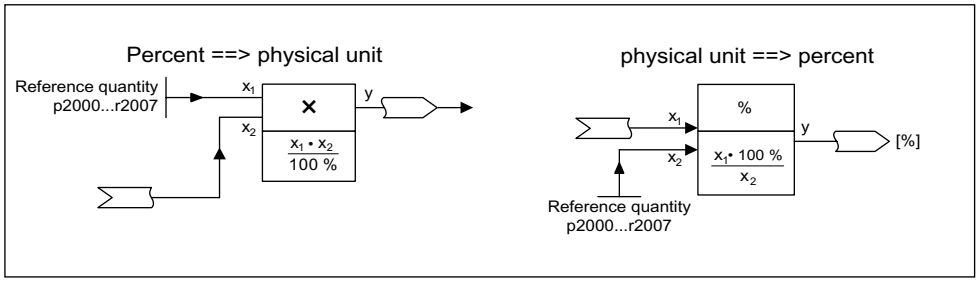

Figure 7-27 Illustration of conversion with reference values

Note

If a referenced form is selected and the reference parameters (e.g. p2000) are changed retrospectively, the referenced values of some of the control parameters are also adjusted to ensure that the control behavior is unaffected.

Using STARTER offline

Following offline drive configuration, the reference parameters are preset; they can be changed and protected under Drive -> Configuration -> "Disabled list" tab.

Note

If the reference values (p2000 to p2007) are changed offline in STARTER, it can lead to boundary violations of the parameter values, which cause fault messages during loading to the drive.

Normalization for servo object

Table 7- 18 Normalization for servo object

Size	Normalization parameter	Default at initial commissioning
Reference speed	100 % = p2000	Induction motor p2000 = Maximum motor speed (p0322) Synchronous motor p2000 = Rated motor speed (p0311)
Reference voltage	100 % = p2001	p2001 = 1000 V
Reference current	100 % = p2002	p2002 = Motor limit current (p0338); when p0338 = "0", 2 * rated motor current (p0305)
Reference torque	100 % = p2003	p2003 = p0338 * p0334; when "0", 2 * rated motor torque (p0333)
Reference power	100 % = r2004	r2004 = p2003 * p2000 * π / 30
Reference angle	100% = p2005	90°
Reference acceleration	100% = p2007	0.01 $1/s^2$
Reference frequency	100 % = p2000/60	-
Reference modulation depth	100 % = Maximum output voltage without overload	-
Reference flux	100 % = Rated motor flux	-
Reference temperature	100% = 100°C	-
Reference electrical angle	100 % = 90°	-

Overview of important parameters (see SINAMICS S110 List Manual)

- p0340 Automatic calculation of motor/control parameters
- p0573 Disable automatic calculation of reference values
- p2000 Reference speed reference frequency
- p2001 Reference voltage
- p2002 Reference current
- p2003 Reference torque
- r2004 Reference power
- p2005 Reference angle
- p2007 Reference acceleration

7.2.3 Automatic restart

Description

The "automatic restart" function is used to restart the drive automatically once the power has been restored following a power failure. In this case, all of the faults present are automatically acknowledged and the drive is powered-up again. This function is not only restricted to line supply faults; it can also be used to automatically acknowledge faults and to restart the motor after any fault trips.

⚠ WARNING

If p1210 is set to value > 1, the motor can start automatically once the power supply has been restored. This is especially critical if the motor comes to a standstill (zero speed) after longer line supply failures and it is incorrectly assumed that it has been powered down. For this reason, death, serious injury, or considerable material damage can occur if personnel enter the working area of a motor in this condition.

Automatic restart mode

Table 7- 19 Automatic restart mode

p1210	Mode	Meaning
0	Disables automatic restart	Automatic restart inactive
1	Acknowledges all faults without restarting	When p1210 = 1, faults that are present are acknowledged automatically when their cause is rectified. If further faults occur after faults have been acknowledged, then these are also again automatically acknowledged. A minimum time of p1212 + 1 s must expire between successful fault acknowledgment and a fault re-occurring if the signal ON/OFF1 (control word 1, bit 0) is at a HIGH signal level. If the ON/OFF1 signal is at a LOW signal level, the time between a successful fault acknowledgment and a new fault must be at least 1s. For p1210 = 1, fault F07320 is not generated if the acknowledge attempt failed (e.g. because the faults occurred too frequently).

p1210	Mode	Meaning
4	Automatic restart after line supply failure, no additional start attempts	If p1210 = 4, an automatic restart will only be performed if in addition fault F30003 occurs on the Motor Module or there is a HIGH signal at binector input p1208[1]. If additional faults are present, then these faults are also acknowledged and when successfully acknowledged, the starting attempt is continued. When the 24 V power supply of the CU fails, this is interrupted as a line supply failure.
6	Restart after any fault with additional start attempts	When p1210 = 6, an automatic restart is carried out after any fault or when p1208[0] = 1. If the faults occur one after the other, then the number of start attempts is defined using p1211. Monitoring over time can be set using p1213.

Starting attempts (p1211) and delay time (p1212)

p1211 is used to specify the number of starting attempts. The number is internally decremented after each successful fault acknowledgment (line supply voltage must be re-applied). Fault F07320 is signaled if the number of parameterized startup attempts is exceeded.

When p1211 = x, x + 1 starting attempts are made.

Note

A start attempt immediately starts when the fault occurs.

The faults are automatically acknowledged in intervals of half the delay time p1212.

After successful acknowledgment and voltage recovery, the system is automatically powered up again.

The starting attempt is considered to have been successfully completed once motor magnetization (induction motor) is complete (r0056.4 = 1) and one additional second has expired. The starting counter is only reset back to the initial value p1211 after this time.

If additional faults occur between successful acknowledgment and the end of the startup attempt, then the startup counter, when it is acknowledged, is also decremented.

Monitoring time line supply return (p1213)

The monitoring time starts when the faults are detected. If the automatic acknowledgments are not successful, the monitoring time runs again. If the drive has not successfully restarted once the monitoring time has expired (motor magnetization must have been completed: r0056.4 = 1), fault F07320 is output. The monitoring is de-activated with p1213 = 0.

If a fault is pending, fault F07320 will be generated on every restart attempt if the time defined in p1213 has expired. If p1210 > 1 and the time in p1213 is set lower than p1212, then fault F07320 will also be generated on every restart attempt. The monitoring time must be extended if the faults that occur cannot be immediately and successfully acknowledged (e.g. when faults are permanently present).

Commissioning

1. Activating the function
   – Automatic restart: Set mode (p1210).
2. Set starting attempts (p1211).
3. Set delay times (p1212, p1213).
4. Check function.

Overview of important parameters (see SINAMICS S110 List Manual)

- r0863 CO/BO: Drive coupling status word/control word
- p1210 Automatic restart, mode
- p1211 Automatic restart, attempts to start
- p1212 Automatic restart, delay time start attempts
- p1213 Automatic restart, waiting time increment

7.2.4 Armature short-circuit brake, DC brake

Features

- For permanent-magnet synchronous motors:
  – Controlling an external armature short-circuit configuration
- For induction motors:
  Activation of DC brake
- Assignment as fault response

Description

Armature short-circuit braking is only supported for permanent-magnet synchronous motors. It is mainly required when braking in a hazardous situation, if controlled braking using the frequency converter is no longer possible (e.g. in the event of a power failure, EMERGENCY OFF, etc.). The motor stator windings are short-circuited by means of a contactor circuit (possibly using external braking resistors). The resistance in the motor circuit suppresses the motor's kinetic energy.

In order for the CU305 to be able to maintain this function in the event of a power failure, an uninterruptible 24 V power supply (UPS) must be used. High-speed permanent-magnet spindle drives for machine tools are a typical application for armature short-circuit braking.

With the external armature short-circuit brake, the slow contactor response causes a response in the range of > 60 ms.

DC braking is only supported for induction motors. It can be used most effectively to bring the rotor to a safe standstill in the event of the loss of the encoder signal. In order to achieve this, a constant DC current is injected in the stator to decelerate the rotor to standstill and hold it there.

The functions can be triggered by applying a "1" signal to binector input p1230 or in response to a fault (see the description of p0491 or p2100/p2101).

External armature short-circuit braking

The external armature short-circuit is activated by setting p1231 = 1 (with contactor feedback signal) or p1231 = 2 (without contactor feedback signal). It can be triggered via an input signal p1230 (signal = 1) or a fault response. Triggering takes place once the pulses have been suppressed or the circuit breaker has been inhibited.

This function uses output terminals to control an external contactor, which can short-circuit the motor terminals via external resistors, for example. An armature short-circuit brake has the advantage of a higher braking effect than a mechanical brake at the start of braking (at a high speed). However, since the braking effect fades away as the speed drops, we recommend a combination of armature and mechanical braking.

For the function with contactor feedback signal, the feedback inputs of both command data sets (CDS = 2) p1235[0..1] have to be wired.

The external armature short-circuit is only supported for rotary-type permanent-magnet synchronous motors (p0300 = 2xx).

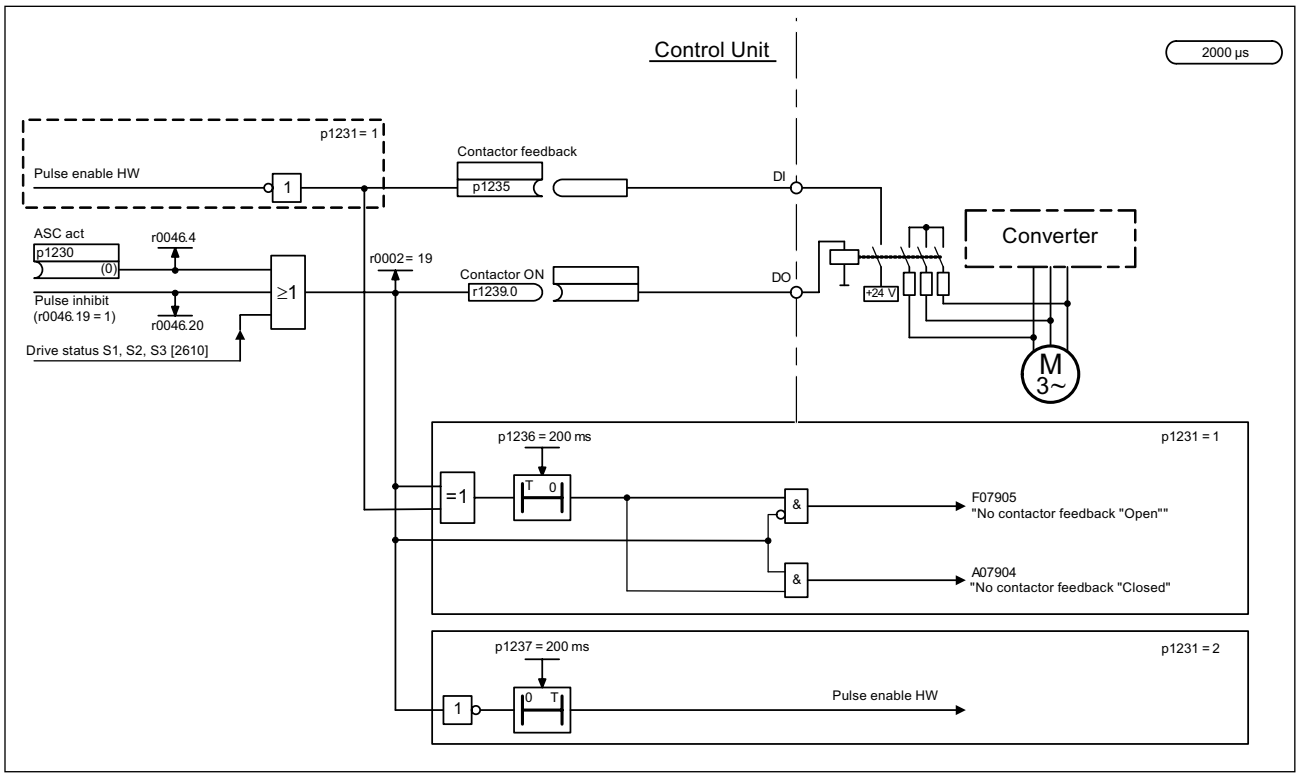

Figure 7-28 External armature short-circuit braking with/without contactor feedback signal

DC brake (induction motors)

The DC brake is activated by setting parameter p1231 = 4 (internal armature short-circuit/DC brake). It can be triggered via an input signal p1230 (signal = 1) or a fault response:

Activation of DC brake with BI p1230

If the DC brake is activated with the digital input signal, the pulses will first be inhibited for the motor demagnetization time p0347 in order to demagnetize the motor. Next, braking current p1232 is injected into the DC brake for as long as the signal = 1 at the binector input, in order to decelerate the motor or hold it at standstill.

When the DC brake is released, the drive will return to its initial operating mode (it is only at this point that the motor is remagnetized).

In this mode, parameter p1234 (speed at the start of DC braking) is ignored.

DC brake as a fault response

If the DC brake is activated as a fault response, the motor will first be decelerated in field-oriented mode along the OFF1 ramp (defined using p1082, p1121) until it reaches the speed at the start of DC braking (p1234). If the fault in response to which braking has been triggered is an encoder fault, braking will not be controlled (p1234 is ignored). Next, the pulses will be inhibited for the motor demagnetization time p0347 in order to demagnetize the motor. DC braking will then commence for the DC braking duration set in p1233. If an encoder signal is available (neither encoder fault nor encoderless operation), the DC brake will remain active for the set duration p1233 but will be deactivated at the latest when the standstill threshold p1226 is undershot.

NOTICE
In encoderless operation or with strong field weakening in particular, when the rotor is rotating, there is no guarantee of controlled operation being restored once the DC brake function has been deactivated. In such cases, the drive will shut down with a fault message with OFF2 response.

Note

- During parameterization, a check is made to determine whether the following conditions have been met (if not, fault message F7906 is generated):
  - Suitable type of motor for function
  - Function-specific: Sensible assignment of parameters p1232 ... p1237.
- The internal armature short-circuit (p1231 = 4 for synchronous motor) and internal voltage protection (p1231 = 3) functions are not supported for the SINAMICS S110 system.
- The "IASC/DC brake" fault response has the second-highest priority (second only to OFF2).

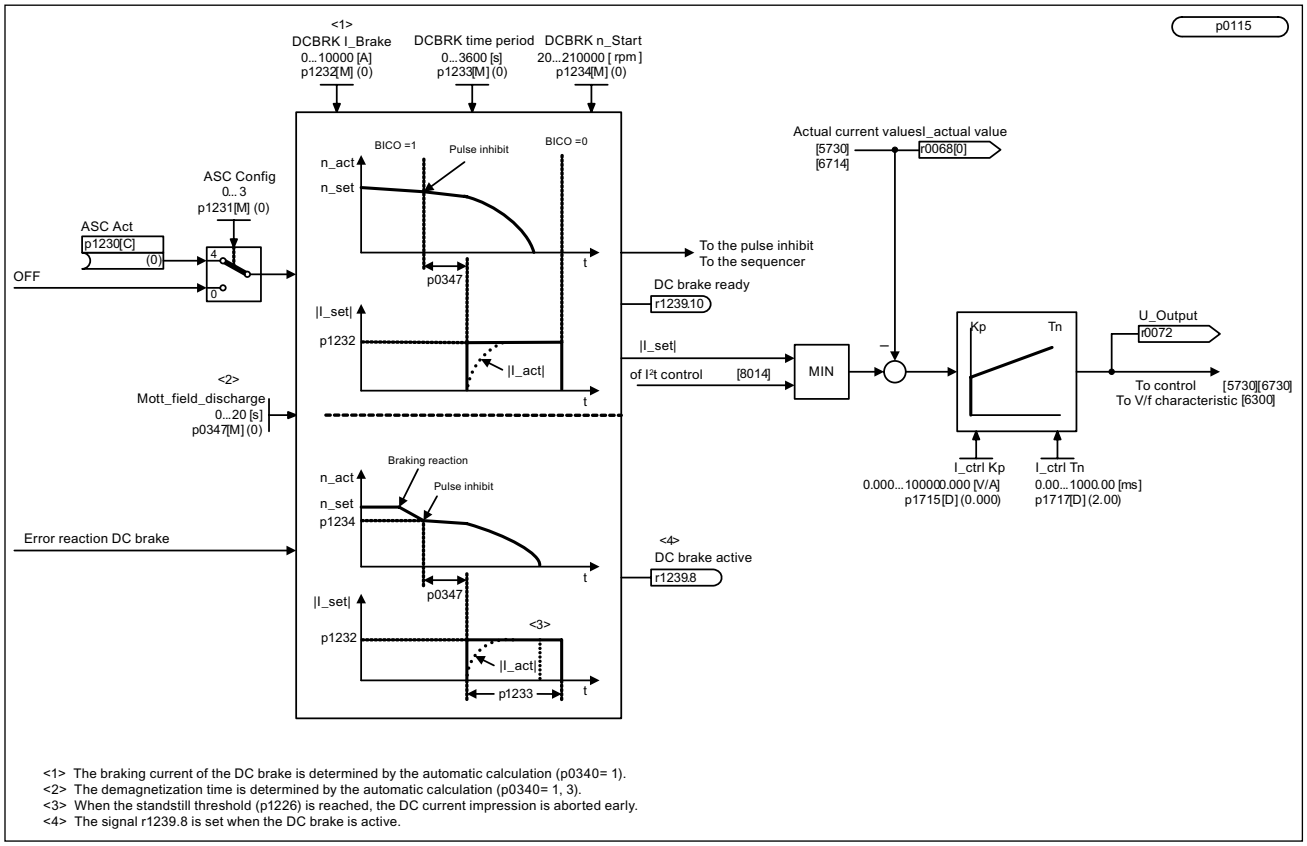

Figure 7-29 DC brake

Function diagrams (see SINAMICS S110 List Manual)

- 7014 External armature short circuit (p0300 = 2xx or 4xx, synchronous motors)
- 7017 DC brake (p0300 = 1xx, induction motors)

Overview of important parameters (see SINAMICS S110 List Manual)

- p1226 Standstill detection, velocity threshold
- p1230[0...n] BI: Armature short-circuit/DC brake activation
- p1231[0...n] Armature short-circuit/DC brake configuration
- p1232[0...n] DC brake, braking current
- p1233[0...n] DC braking time
- p1234[0...n] DC brake starting speed
- p1235[0...n] BI: External armature short-circuit, contactor feedback signal
- p1236[0...n] External armature short-circuit, contactor feedback signal monitoring time
- p1237[0...n] External armature short-circuit, delay time when opening
- r1238 CO: Armature short-circuit, external state
- r1239.0..10 CO/BO: Armature short-circuit/DC brake status word

7.2.5 OFF3 torque limits

Description

If the torque limits are externally specified (e.g. tension controller), then the drive can only be stopped with a reduced torque.

In order to avoid this, there is a binector input (p1551), that for a LOW signal, activates the torque limits p1520 and p1521. This means that the drive can brake with the maximum torque by interconnecting the signal OFF 3 (r0899.5) to this binector.

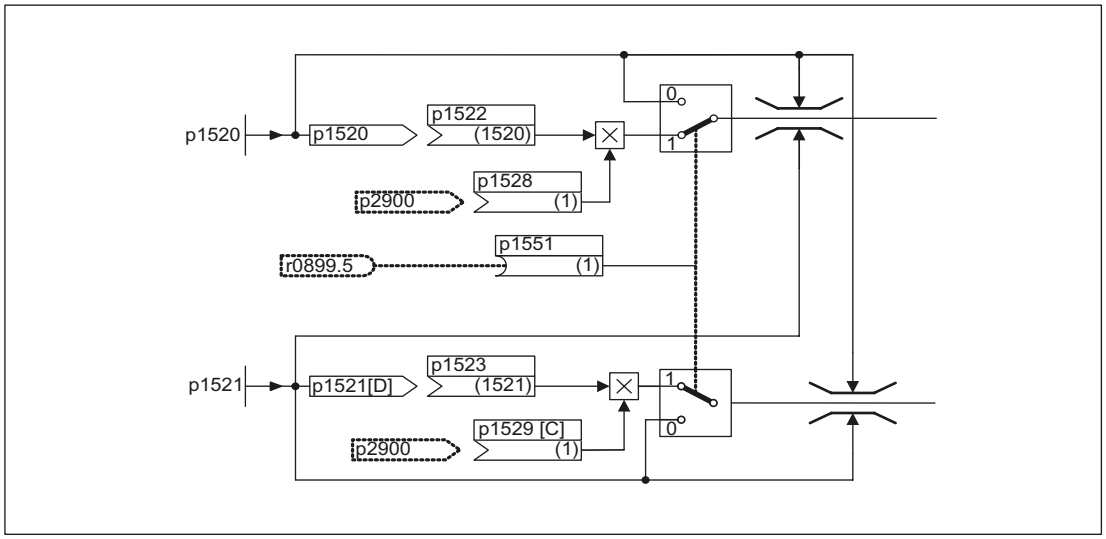

Figure 7-30 Torque limits OFF3

Function diagrams (see SINAMICS S110 List Manual)

- 5620 Motor/generator torque limits
- 5630 Upper/lower torque limit

Overview of important parameters (see SINAMICS S110 List Manual)

- p1520 Torque limit, upper/motoring
- p1521 Torque limit, lower/regenerative

7.2.6 Simple brake control

7.2.6.1 Description

Features

- Automatic activation by means of sequence control
- Standstill (zero-speed) monitoring
- Forced brake release (p0855, p1215)
- Application of brake for a 1 signal "unconditionally close holding brake" (p0858)
- Application of brake after "Enable speed controller" signal has been canceled (p0856)

Description

The "Simple brake control" is used exclusively for the control of holding brakes. The holding brake is used to secure drives against unwanted motion when deactivated.

The control command for opening and closing the holding brake is transferred directly to the drive via by the Control Unit that logically links and monitors the signals with the system-internal processes.

The Motor Module then performs the action and activates the output for the holding brake. The exact sequence control is illustrated in the SINAMICS S110 List Manual (FP 2701). The operating principle of the holding brake can be configured via parameter p1215.

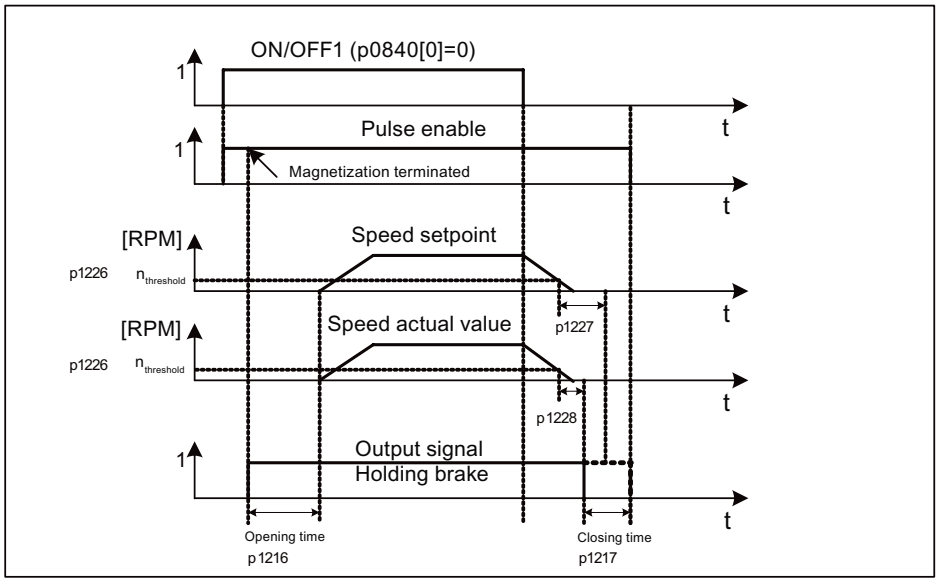

Figure 7-31 Function chart: simple brake control

The start of the closing time for the brake depends on the expiration of the shorter of the two times p1227 (Pulse suppression, delay time) and p1228 (Zero speed detection monitoring time)

⚠ WARNING
The holding brake must not be used as a service brake. When holding brakes are used, the special technological and machine-specific conditions and standards for ensuring personnel and machine safety must be observed. The risks involved with vertical axes, for example, must also be taken into account.

Commissioning

Simple brake control will be activated automatically (p1215 = 1) when the Motor Module has an internal brake control and a connected brake has been found.

If no internal brake control is available, the control can be activated using a parameter (p1215 = 3).

CAUTION
If p1215 = 0 (no brake available) is set when a brake is present, the drive runs with applied brake. This can damage the brake beyond repair.

CAUTION
Brake control monitoring may only be activated for Blocksize power units with Safe Brake Relay (p1278 = 0).

Function diagrams (see SINAMICS S110 List Manual)

- 2701 Simple brake control (r0108.14 = 0)

Overview of important parameters (see SINAMICS S110 List Manual)

- r0056.4 Magnetizing complete
- r0060 CO: Speed setpoint before the setpoint filter
- r0063 CO: Actual speed smoothed (servo)
- r0108.14 Extended brake control
- p0855[C] BI: Unconditionally release holding brake
- p0856 BI: Speed controller enabled
- p0858 BI: Unconditionally close holding brake
- r0899.12 BO: Holding brake open
- r0899.13 BO: Command, close holding brake
- p1215 Motor holding brake configuration
- p1216 Holding brake release time

- p1217 Holding brake application time
- p1226 Threshold for zero speed detection
- p1227 Zero speed detection monitoring time
- p1228 Zero speed detection, delay time
- p1278 Deactivate monitoring of brake control

7.2.7 Runtime (operating hours counter)

Total system runtime

The total system runtime is displayed in p2114 (Control Unit). Index 0 indicates the system runtime in milliseconds after reaching 86.400.000 ms (24 hours), the value is reset. Index 1 indicates the system runtime in days.

At power-off the counter value is saved.

After the drive unit is powered-up, the counter continues to run with the value that was saved the last time that the drive unit was powered-down.

Relative system runtime

The relative system runtime after the last POWER ON is displayed in p0969 (Control Unit). The value is in milliseconds and the counter overflows after 49 days.

Actual motor operating hours

The motor operating hours counter p0650 (drive) is started when the pulses are enabled. When the pulse enable is withdrawn, the counter is stopped and the value saved.

If p0651 is at 0, the counter is de-activated.

If the maintenance interval set in p0651 is reached, fault F01590 is triggered. Once the motor has been maintained, the maintenance interval must be reset.

CAUTION
If the motor data set is switched during the star/delta switchover without the motor being changed, the two values in p0650 must be added to determine the correct number of motor operating hours.

Operating hours counter for the fan

The operating hours of the fan in the power unit are displayed in p0251 (drive).

The number of hours operated can only be reset to 0 in this parameter (e.g. after a fan has been replaced). The service life of the fan is entered in p0252 (drive). Alarm A30042 is output 500 hours before this figure is reached. Monitoring is deactivated when p0252 = 0.

7.2.8 Parking axis and parking encoder

7.2.8.1 Description

The parking function is used in two ways:

- "Parking axis"
  - Monitoring of all encoders assigned to the "motor control" application of a drive is suppressed.
  - All encoders assigned to the "Motor control" application of a drive are prepared for the "removed" state.
- "Parking encoder"
  - Monitoring of a certain encoder is suppressed.
  - The encoder is prepared for the "removed" state.

Parking an axis

When the axis is parked, the power unit and all the encoders assigned to "motor control" are switched to inactive (r0146[n] = 0).

- Control is carried out via the control/status words of the cyclic telegram (STW2.7 and ZSW2.7) or using parameters p0897 and r0896.0.
- The drive must be brought to a standstill by the higher-level controller (disable pulses e.g. via STW1.0/OFF1).
- A measuring system that is not assigned to the "motor control" (e.g. direct measuring system) remains active (r0146[n] = 1).
- The drive object remains active.

Note

Once the "Parking axis" / "Parking encoder" status has been canceled, you may have to carry out the following actions:

If the motor encoder has been replaced: determine the commutation angle offset (p1990).

A new encoder must be referenced again (e.g. to determine the machine zero point).

Parking an encoder

When an encoder is parked, the encoder being addressed is switched to inactive (r0146 = 0).

- Control is carried out via the encoder control/status words of the cyclic telegram (Gn_STW.14 and Gn_ZSW.14).
- With a parked motor measuring system, the associated drive must be brought to a standstill by the higher-level control system (disable pulses e.g. via CTW1.0/OFF1).
- The monitoring functions for the power unit remain active (r0126 = 1).

Example: parking axis

In the following example, an axis is parked. To ensure that the axis parking is effective, the drive must be brought to a standstill (e.g. via STW1.0 (OFF1). All components assigned to the motor control (e.g. power unit and motor encoder) are shut down.

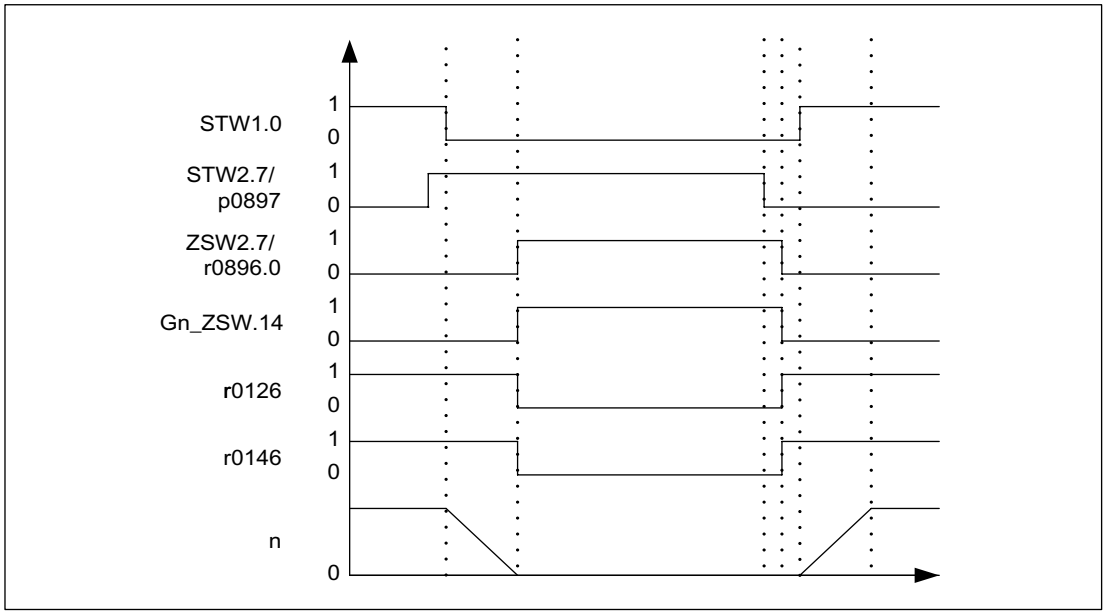

Figure 7-32 Function chart: parking axis

Example: parking encoder

In the following example, a motor encoder is parked. To activate motor encoder parking, the drive must be stopped (e.g. via STW1.0 (OFF1).

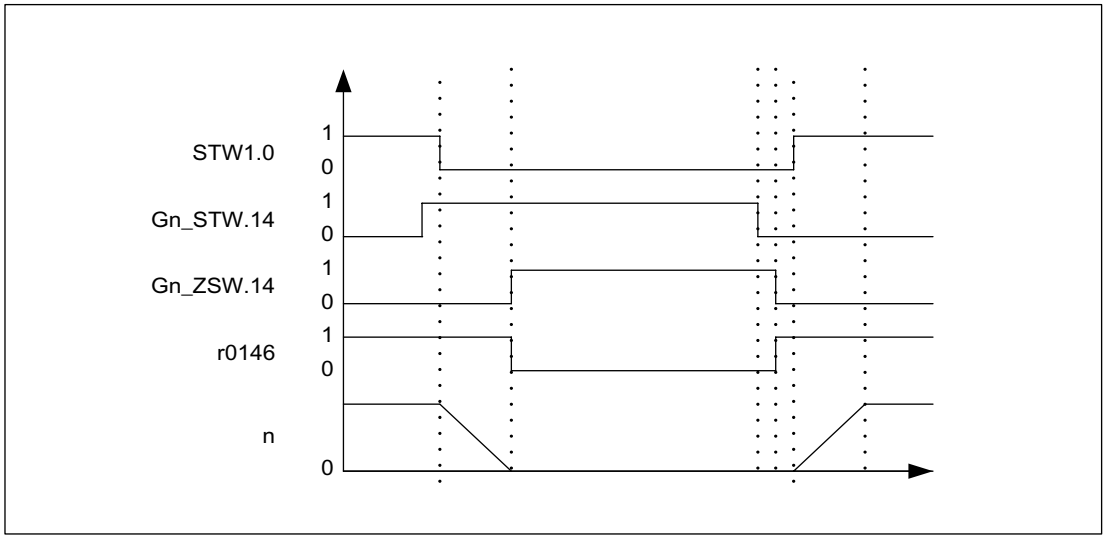

Function chart: parking encoder

Overview of important parameters (see SINAMICS S110 List Manual)

- p0145 Activate/deactivate encoder interface
- r0146 Encoder interface active/inactive
- p0895 BI: Activate/deactivate power unit component
- r0896.0 BO: Parking axis status word
- p0897 BI: Parking axis selection

7.2.8.2 Example: parking axis and parking sensor

Example: parking axis

In the following example, an axis is parked. To ensure that the axis parking is effective, the drive must be brought to a standstill (e.g. via CTW1.0 (OFF1). All components assigned to the motor control (e.g. power unit and motor encoder) are shut down.

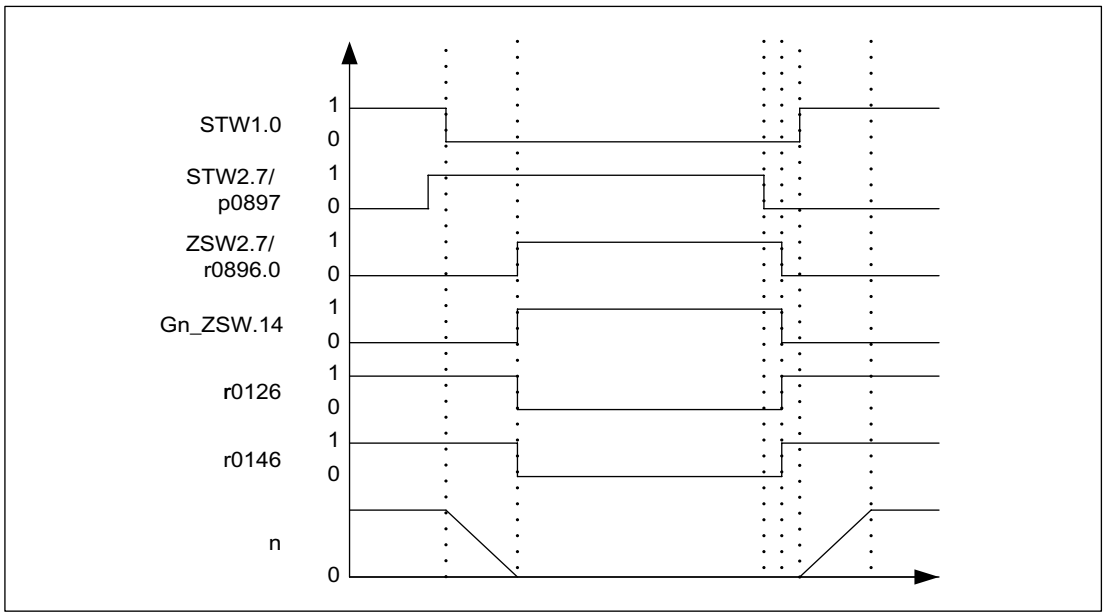

Figure 7-33 Function chart: parking axis

Example: parking encoder

In the following example, a motor encoder is parked. To activate motor encoder parking, the drive must be stopped (e.g. via STW1.0 (OFF1).

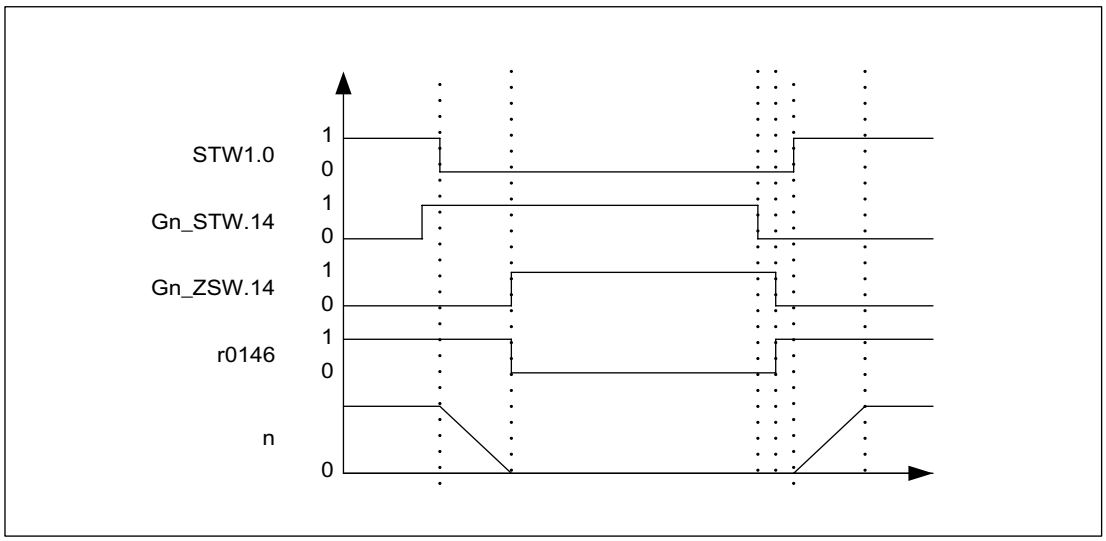

Figure 7-34 Function chart: parking encoder

7.2.9 Updating the firmware

The firmware must be updated if the functional scope is extended in a more recent version and the corresponding functions need to be used.

A memory card containing the firmware update should be inserted into the powered-down Control Unit 305. On power up, the firmware on the memory card will be transferred to the CU305's non-volatile ROM memory. Any parameter data sets also on the memory card will also be transferred. The Control Unit 305 will then start automatically with the newly uploaded firmware, including the newly uploaded parameters, if applicable.

This process may take a few minutes and is indicated by the READY(RDY) LED on the CU305 lighting up steady red. The progress is displayed in parameter p7827.

Once all updates have been uploaded, the READY(RDY) LED will flash red at 2 Hz and the corresponding READY(RDY) LED on the component will flash green/red at 2 Hz. For the firmware to be activated, a POWER ON must be carried out for the components.

Note

The versions of the DRIVE-CLiQ component and that of the Control Unit may differ. A version overview can be accessed via parameter r7825.

7.2.9.1 Upgrading firmware and the project in STARTER

Preconditions are a functional project, a memory card containing the new firmware and a current version of STARTER.

Upgrade the project

1. Is the project in STARTER? Yes: continue with 3.
2. Upload project with STARTER.
   - Connect with target system (go online)
   - Downloading the project into the PG
3. Install the latest firmware version for the project.
   - in the project navigator, right-click the drive unit -> Target -> Device version
   - e.g. select version "SINAMICS S110 V4.1x" -> Change version

Update the firmware and load the new project to the target device.

1. Insert memory card with the new firmware version.
   - Disconnect the Control Unit from the power supply ->
   - Insert the memory card containing the new FW version ->
   - Power-up the Control Unit again.
2. Go online and download the project to the target device -> Copy from RAM to ROM
3. Upgrading the firmware for the DRIVE-CLiQ components takes place automatically.
4. Reset the drive unit using a POWER ON (Control Unit and all DRIVE-CLiQ components). The new firmware release is only effective in the DRIVE-CLiQ components now and is also displayed in the version overview.

7.2.10 Changing the direction of rotation without changing the setpoint

Features

- Not change to the speed setpoint and actual value, the torque setpoint and actual value and the relative position change.
- Only possible when the pulses are inhibited

CAUTION
If a change of rotational direction is configured in the data set configurations (e.g. p1821[0] = 0 and p1821[1] = 1), then when the function module basic positioner or position control is activated, the absolute adjustment must be reset each time the system boots or when the rotational direction changes (p2507), as the position reference is lost when the rotational direction changes.

Note

If one of the p1959.14/15 options (positive/negative direction of rotation permitted) is selected in parameter p1959, this will affect the direction of rotation when p1821 (sense of rotation) is set as follows:
If p1821 = 0 or 1, positive direction of rotation (p1959.14 =1) means: clockwise or counter-clockwise direction respectively.
If p1821 = 1 or 0, negative direction of rotation (p1959.15 =1) means: counter-clockwise or clockwise direction respectively.

Description

The direction of rotation of the motor can be reversed using the rotational direction change via p1821 without having to change the motor rotating field by interchanging two phases at the motor and having to invert the encoder signals using p0410.

The rotational direction change via p1821 can be detected as a result of the direction of rotation of the motor. The speed setpoint and actual value, torque setpoint and actual value and also the relative position change remain unchanged.

The rotational direction change can be identified as a result of the phase voltage. Similarly, when the rotational direction changes, the absolute position reference is also lost.

Overview of important parameters (see SINAMICS S110 List Manual)

- r0069 Phase current, actual value
- p1821 Rotational direction
- p1959[0...n] Rotating measurement configuration
- p2507 LR absolute encoder adjustment status

7.3 Function modules

7.3.1 Function modules - Definition and commissioning

Description

A function module is a functional expansion of a drive object that can be activated during commissioning.

Examples of function modules:

- Technology controller
- Setpoint Channel
- Extended brake control

A function module generally has separate parameters and, in some cases, separate faults and warnings too. These parameters and messages are only displayed when the function module is active. An active function module also generally requires additional processing time, which must be taken into account during configuration.

Commissioning with STARTER

In the STARTER commissioning screens, you can activate the function modules directly (e.g. technology controller) or indirectly (activating the basic positioner automatically activates position control, for example).

Commissioning via parameter (only with BOP20)

The function modules can be activated/de-activated using parameter p0108 of the Control Unit (CU). The READY LED on the main component of the drive object can be made to flash by means of parameter p0124 (CU).

Overview of important parameters (refer to the SINAMICS S110 List Manual)

- p0108 Drive objects, function module
- p0124 Identifying the main components using LEDs

7.3.2 Technology controller

7.3.2.1 Features

Simple control functions can be implemented with the technology controller, e.g.:

- Level control
- Dancer position/tension control
- Pressure control
- Flow control
- Simple closed-loop control without higher-level controller

The technology controller features:

- Separate fixed values
- Integrated motorized potentiometer
- Technology controller with:
  - Two scalable setpoints
  - Ramp-function generator in setpoint channel
  - Filter for actual value and setpoint channel
  - Two modes for derivative component injection
  - Pre-control
  - Output ramp with limits
  - Scalable output signal

7.3.2.2 Description

Motorized potentiometer

This function is used to simulate an electromechanical potentiometer for setpoint input. Separate binector inputs for higher (p2235) and lower (p2236) are used to adjust the input setpoint: The potentiometer limits are defined within maximum (p2237) and minimum (p2238) values. The setpoint input is routed to an internal ramp-function generator, for which both a ramp-up (p2247) and a ramp-down (p2248) time, as well as an initial value (p2240) can be defined. Initial rounding can be activated to fine-tune the setpoint, whereby the acceleration of the setpoint is calculated as follows:

$a = 0.0001 \cdot MAX[p2237; |p2238|] \cdot 0.13^2$

The connector output of the motorized potentiometer (r2250) can, for example, be used as a setpoint for the technology controller. The motorized potentiometer requires the OFF1 enable for operation.

Technology controller

Two scalable setpoints (p2255/ p2256) can be specified via two connector inputs (p2253/ p2254). A ramp-function generator in the setpoint channel can be used to define a ramp by means of the ramp-up and ramp-down times (p2257/p2258). Both the setpoint and actual value channels have access to a filter element with configurable time constants (p2261 and p2265).

The proportional gain (p2280), integral time (p2285) and derivative-action time (p2274) can be set in the following technology controller. The controller itself has access to two controller type modes dependent upon p2263:

- PI controller with derivative component in actual value channel (p2263 = 0; factory setting)

  With this type of controller, changes to actual values caused by a change in the disturbance variable will generate a stronger reaction from the final controlling element (on account of the derivative component) . The effect of abrupt changes to setpoints (no ramp) on the control process is tempered by the reaction of the final controlling element (thereby reducing the load on the final controlling element). The derivative component can also be used to compensate the delay generated by the upstream smoothing of a noisy actual value signal.

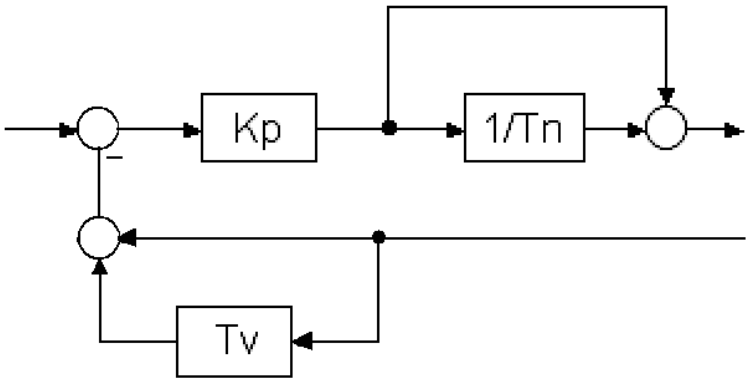

Figure 7-35 Controller structure of the PI controller with derivative component in the actual value channel

- Technology controller (p2263 = 1)

  Here, the derivative component is generated from the system deviation; as such, a setpoint change will generate an abrupt change in the final controlling element. Changes to disturbance variables are also compensated more quickly due to the action of the derivative component.

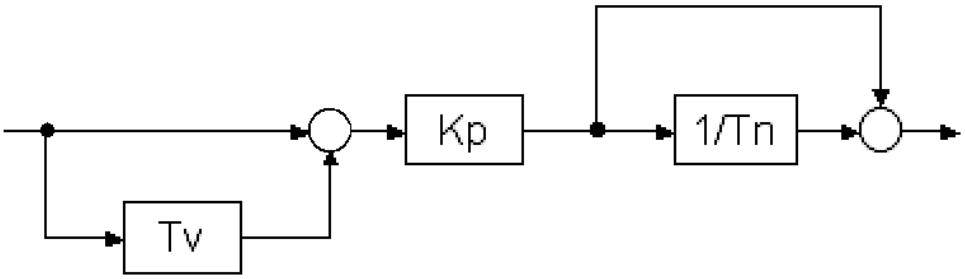

Figure 7-36 Controller structure of the PID technology controller when p2263 = 1

Please note that the controller structure of the technology controller differs from the standard technology controller structure described below, which is standard in some sources. To enable comparison, the corresponding conversions have been specified:

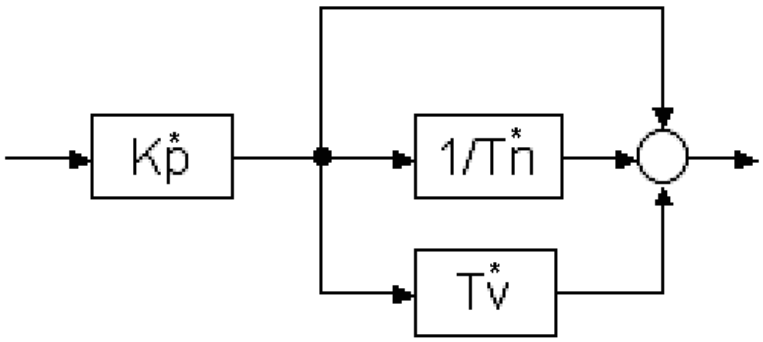

Figure 7-37 Technology controller structure with parallel components

$$\frac{U(s)}{E(s)} = K_P^* \cdot \left(1 + \frac{1}{s \cdot T_N^*} + s \cdot T_V^*\right)$$

where

$$K_P^* = K_P \cdot \left(1 + \frac{T_V}{T_N}\right) \quad T_V^* = \frac{T_V \cdot T_N}{T_V + T_N} \quad T_N^* = T_V + T_N$$

Other controller variants are also possible:

- PI controller by switching-out the derivative component (rate time T_V: p2274 = 0)
- PD controller by switching-out the integral component (integral time T_N: p2285 = 0)
- Proportional controller by switching-out the integral and derivative components (p2274 = 0; p2285 = 0)

Note:
In the factory setting (p2252.1 = 1), the integral component is not dependent upon the proportional gain (p2280). In this case p2285 is the integration time constant T_I. If p2252.1 = 0, p2285 will become the integral time T_N, with the result that the following applies for the integral component:

$$\frac{U_I(s)}{E(s)} = K_P \cdot \frac{1}{s \cdot T_N}$$

A further connector input (p2289) is available at the controller output for pre-control or switching in fault values. The signal is then routed via a limit (p2291/2).

The technology controller has a dedicated enable binector input (p2200). To avoid abrupt changes in the output signal, an output ram can be defined by means of a ramp-up/ramp-down time (p2293).

Note:
In the factory setting p2252.2 = 1, the output will be set to 0 immediately when the enable is lost (p2200 = 0). In order for the output signal to be fed back via the output ramp, p2252.2 = 0 must be set.

The output signal (r2294) can then be scaled via the connector input p2295 before being made available as a connector output for downstream connection.

7.3.2.3 Integration

The technology controller function is integrated in the system as follows.

Function diagrams (see SINAMICS S110 List Manual)

- 7950 Fixed values (r0108.16 = 1)
- 7954 Motorized potentiometer (r0108.16 = 1)
- 7958 Closed-loop control (r0108.16 = 1)

Overview of important parameters (see SINAMICS S110 List Manual)

Fixed setpoints

- p2201[0...n] CO: Technology controller, fixed value 1
- ...
- p2215[0...n] CO: Technology controller, fixed value 15
- p2220[0...n] BI: Technology controller fixed value selection bit 0
- p2221[0...n] BI: Technology controller fixed value selection bit 1
- p2222[0...n] BI: Technology controller fixed value selection bit 2
- p2223[0...n] BI: Technology controller fixed value selection bit 3

Motorized potentiometer

- p2230[0...n] Technology controller motorized potentiometer configuration
- p2235[0...n] BI: Technology controller motorized potentiometer, raise setpoint
- p2236[0...n] BI: Technology controller motorized potentiometer, lower setpoint
- p2237[0...n] Technology controller motorized potentiometer, maximum value
- p2238[0...n] Technology controller motorized potentiometer, minimum value
- p2240[0...n] Technology controller motorized potentiometer, start value
- r2245 CO: Technology controller motorized potentiometer, setpoint before RFG
- p2247[0...n] Technology controller motorized potentiometer, ramp-up time
- p2248[0...n] Technology controller motorized potentiometer, ramp-down time
- r2250 CO: Technology controller motorized potentiometer, setpoint after RFG

Closed-loop control

- p2200 BI: Technology controller enable
- p2253[0...n] CI: Technology controller setpoint 1
- p2254 [0...n] CI: Technology controller setpoint 2
- p2255 Technology controller setpoint 1 scaling
- p2256 Technology controller setpoint 2 scaling
- p2257 Technology controller ramp-up time
- p2258 Technology controller ramp-down time
- p2261 Technology controller setpoint filter time constant
- p2263 Technology controller type
- p2264[0...n] CI: Technology controller actual value
- p2265 Technology controller actual value filter time constant
- p2280 Technology controller proportional gain
- p2285 Technology controller integral action time
- p2289[0...n] CI: Technology controller pre-control signal
- p2295 Technology controller output scaling

7.3.2.4 Commissioning with STARTER

The "technology controller" function module can be activated via the commissioning Wizard.

You can check the actual configuration in parameter r0108.16.

Dedicated screens are available for parameterization.

7.3.3 Extended monitoring functions

7.3.3.1 Description

When the extension is activated, the monitoring functions are extended as follows:

- Speed setpoint monitoring: |n_setp| ≤ p2161
- Speed setpoint monitoring: n_set > 0
- Load monitoring

Description of load monitoring

This function monitors power transmission between the motor and the working machine. Typical applications include V-belts, flat belts, or chains that loop around the belt pulleys or cog wheels for drive and outgoing shafts and transfer the peripheral speeds and forces. Load monitoring can be used here to identify blockages in the working machine and interruptions to the power transmission.

During load monitoring, the current speed/torque curve is compared with the programmed speed/torque curve (p2182 to p2190). If the current value is outside the programmed tolerance bandwidth, a fault or alarm is triggered depending on parameter p2181. The fault or alarm message can be delayed by means of parameter p2192 to prevent false messages caused by brief transitional states.

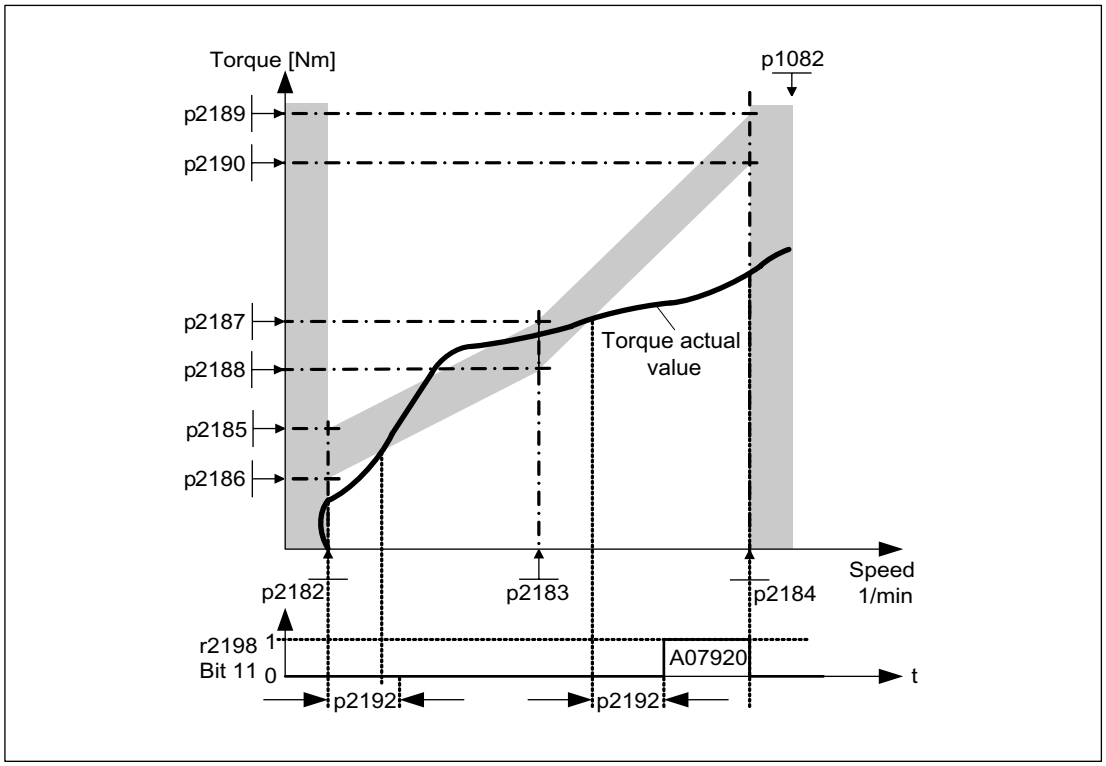

Figure 7-38 Load monitoring

Commissioning

The extended monitoring functions are activated while the commissioning wizard is running. Parameter r0108.17 indicates whether it has been activated.

Function diagrams (see SINAMICS S110 List Manual)

- 8010 Speed signals
- 8013 Load monitoring

Overview of important parameters (see SINAMICS S110 List Manual)

Load monitoring

- p2181[D] Load monitoring response
- p2182[D] Load monitoring speed threshold 1
- p2183[D] Load monitoring speed threshold 2
- p2184[D] Load monitoring speed threshold 3
- p2185[D] Load torque monitoring torque threshold 1 upper
- ...
- p2190[D] Load torque monitoring torque threshold 3 lower
- p2192[D] Load monitoring delay time

Speed setpoint monitoring

- p2150[D] Hysteresis speed 3
- p2151[C] CI: Speed setpoint
- p2161[D] Speed threshold value 3
- r2198.4 BO: Status word monitoring 2, |n_setp| ≤ p2161
- r2198.5 BO: Status word monitoring 2, n_setp < 0

7.3.3.2 Integration

The extended monitoring functions are integrated as follows in the system.

Function diagrams (see SINAMICS S110 List Manual)

- 8010 Speed signals
- 8013 Load monitoring

Overview of important parameters (see SINAMICS S110 List Manual)

Load monitoring

- p2181[D] Load monitoring response
- p2182[D] Load monitoring speed threshold 1
- p2183[D] Load monitoring speed threshold 2
- p2184[D] Load monitoring speed threshold 3
- p2185[D] Load torque monitoring torque threshold 1 upper
- ...
- p2190[D] Load torque monitoring torque threshold 3 lower
- p2192[D] Load monitoring delay time

Speed setpoint monitoring

- p2150[D] Hysteresis speed 3
- p2151[C] CI: Speed setpoint
- p2161[D] Speed threshold value 3
- r2198.4 BO: Status word monitoring 2, |n_setp| ≤ p2161
- r2198.5 BO: Status word monitoring 2, n_setp < 0

7.3.3.3 Commissioning

The extended monitoring functions are activated while the commissioning Wizard is running. Parameter r0108.17 indicates whether it has been activated.

7.3.4 Extended brake control

7.3.4.1 Features

The extended brake control function has the following features:

- Forced brake release (p0855, p1215)
- Close the brake for a 1 signal "unconditionally close holding brake" (p0858)
- Binector inputs for releasing/applying the brake (p1218, p1219)
- Connector input for threshold value for releasing/applying the brake (p1220)
- OR/AND block, each with two inputs (p1279, r1229.10, p1229.11)
- Holding and operational brakes can be activated.
- Function for monitoring brake feedback signals (r1229.4, r1229.5)
- Configurable responses (A7931, A7932)
- Application of brake after "Enable speed controller" signal has been removed (p0856)

7.3.4.2 Integration

The extended brake control function is integrated in the system as follows.

Function diagrams (see SINAMICS S110 List Manual)

- 2704 Zero speed detection (r0108.14 = 1)
- 2707 Release and apply brake (r0108.14 = 1)
- 2711 Signal outputs (r0108.14 = 1)

Overview of important parameters (see SINAMICS S110 List Manual)

- r0108.14 Extended brake control
- r0899 CO/BO: Status word sequence control

Standstill (zero-speed) monitoring

- r0060 CO: Speed setpoint before the setpoint filter
- r0063 CO: Actual speed value after actual value smoothing
- p1225 CI: Standstill detection, threshold value
- p1226 Threshold for zero speed detection
- p1227 Zero speed detection monitoring time
- p1228 Zero speed detection, delay time
- p1224[0...3] BI: Close motor holding brake at standstill
- p1276 Motor holding brake standstill detection bypass

Release and apply the brake

- p0855 BI: Unconditionally release holding brake
- p0858 BI: Unconditionally close holding brake
- p1216 Holding brake release time
- p1217 Holding brake application time
- p1218[0...1] BI: Open motor holding brake
- p1219[0...3] BI: Immediately close motor holding brake
- p1220 CI: Open motor holding brake, signal source, threshold
- p1221 Open motor holding brake threshold
- p1277 Motor holding brake delay braking threshold exceeded

Free blocks

- p1279 BI: Motor holding brake, OR/AND logic operation

Brake monitoring functions

- p1222 BI: Motor holding brake, feedback signal, brake closed
- p1223 BI: Motor holding brake, feedback signal, brake open

Configuration, control/status words

- p1215 Motor holding brake configuration
- r1229 CO/BO: Motor holding brake status word
- p1278 Motor holding brake type

Control and status messages for extended brake control

Table 7- 20 Control: Extended brake control

Signal name	Binector input	Control word sequence control / interconnection parameters
Enable speed setpoint	p1142 BI: Enable speed setpoint	STWA.6
Enable setpoint 2	p1152 BI: Setpoint 2 enable	p1152 = r899.15
Unconditionally release holding brake	p0855 BI: Unconditionally release holding brake	STWA.7
Enable speed controller	p0856 BI: Enable speed controller	STWA.12
Unconditionally close holding brake	p0858 BI: Unconditionally close holding brake	STWA.14

Table 7- 21 Status message: Extended brake control

Signal name	Parameter	Brake status word
Command, open brake (continuous signal)	r1229.1	B_ZSW.1
Pulse enable, extended brake control	r1229.3	B_ZSW.3
Brake does not open	r1229.4	B_ZSW.4
Brake does not close	r1229.5	B_ZSW.5
Brake threshold exceeded	r1229.6	B_ZSW.6
Value below brake threshold	r1229.7	B_ZSW.7
Brake monitoring time expired	r1229.8	B_ZSW.8
Request, pulse enable missing/n_ctrl inhibited	r1229.9	B_ZSW.9
Brake OR logic operation result	r1229.10	B_ZSW.10
Brake AND logic operation result	r1229.11	B_ZSW.11

7.3.4.3 Description

The "Extended brake control" function allows complex braking control for motor holding brakes and operational brakes.

The brake is controlled as follows (the sequence reflects the priority):

- Via parameter p1215
- Via binectors p1219[0...3] and p0855
- Via zero speed detection
- Via a connector interconnection threshold value

For an AC drive with "Safe Brake Relay," the "Safe Brake Control" safety function requires that the type of the brake control be set in parameter p1278, to "Brake control with diagnostic evaluation" (p1278 = 0).

7.3.4.4 Examples

Starting against applied brake

When the device is switched on, the setpoint is enabled immediately (if other enable signals are issued), even if the brake has not yet been released (p1152 = 1). The factory setting p1152 = r0899.15 must be disconnected here. The drive first generates torque against the applied brake. The brake is not released until the motor torque or motor current (p1220) has exceeded braking threshold 1 (p1221).

This configuration is used, for example, when the drive is connected to a belt that is under tension (loop accumulator in the steel industry).

Emergency brake

If emergency braking is required, electrical and mechanical braking is to take place simultaneously. This can be achieved if OFF3 is used as a tripping signal for emergency braking:
p1219[0] = r0898.2 (OFF3 to "apply brake immediately").

The OFF3 ramp (p1135) should be set to 0 seconds so that the converter does not work against the brakes. Regenerative energy may accumulate, and this must be either fed back into the supply system or converted into heat using a braking resistor.

This is often used, for example, in calendar stacks, cutting tools, running gears, and presses.

Operating brake for crane drives

For cranes with a manual control, it is important that the drive immediately response when the control lever is moved (master switch). The drive is powered-up using the on command (p0840) (the pulses are enabled). Speed setpoint (p1142) and speed controller (p0856) are inhibited. The motor is magnetized. The magnetization time generally applicable for three-phase motors (1-2 seconds) is therefore eliminated.

Now, there is only the brake opening time that is applicable as delay between moving the master switch and the motor rotating. If the master switch is moved (deflected), then there is a "setpoint enable from the control" (bit interconnected with p1142, p1229.2, p1224.0). The speed controller is immediately enabled - the speed setpoint is enabled after the brake opening time (p1216). When the master switch is in the zero position, the speed setpoint is inhibited - the drive is ramp-down using the ramp function generator. The brake closes once the standstill limit (p1226) has been fallen below. After the brake closing time (p1217), the speed controller is inhibited (the motor is no longer generating any force). The extended brake control is used with the modifications described below.

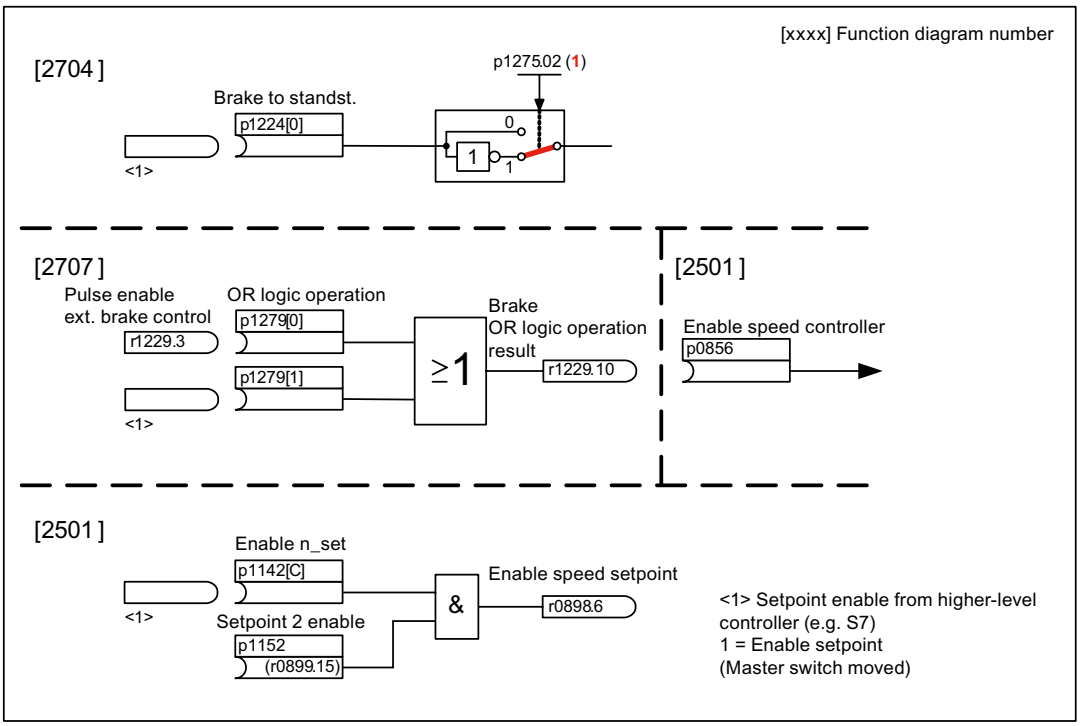

Figure 7-39 Example, operating brake for a crane drive

7.3.4.5 Commissioning

The extended brake control function can be activated while the commissioning Wizard is running. Parameter r0108.14 indicates whether the function module has been activated.

Unless you change the default settings, the extended brake control function behaves in exactly the same way as the simple brake control function.

Brake control can be activated via a parameter (p1215 = 3).

When braking with a feedback signal (p1222), the inverted signal must be connected to the BICO input for the second (p1223) feedback signal. The response times of the brakes can be set in p1216 and p1217.

Note

If p1215 = 0 (no brake available) is set when a brake is present, the drive runs with applied brake. This can damage the brake beyond repair.

CAUTION
Brake control monitoring may only be activated for Blocksize power units with Safe Brake Relay (p1278 = 0).

7.3.5 Closed-loop position control

7.3.5.1 General features

The position controller essentially comprises the following parts:

- Position actual value conditioning (including the lower-level measuring probe evaluation and reference mark search)
- Position controller (including limits, adaptation and the pre-control calculation)
- Monitoring functions (including standstill, positioning, dynamic following error monitoring and cam signals)
- There is still no position actual value conditioning for distance-coded measuring systems.
- Position tracking of the load gear (motor encoder), using absolute encoders for rotary axes (modulo) as for linear axes.

7.3.5.2 Position actual value conditioning

Features

- Correction value (p2512, p2513)
- Setting value (p2514, p2515)
- Position offset (p2516)
- Position actual value (r2521)
- Velocity actual value (r2522)
- Motor revolutions (p2504)
- Load revolutions (p2505)
- Spindle pitch (p2506)
- Position tracking (p2720ff)

Description

The position actual value conditioning implements the conditioning of the position actual value in a neutral position unit LU (LENGTH UNIT). To do this, the function block uses the encoder evaluation/motor control with the available encoder interfaces Gn_XIST1, Gn_XIST2, Gn_STW and Gn_ZSW. These just provide position information in encoder pulses and fine resolution (increments).

The position actual value is conditioned immediately after the system has booted, regardless of whether the position controller is enabled, as soon as valid values are received via the encoder interface.

Parameter p2502 (encoder assignment) is used to define from which encoder (1 or 2), the position actual value is sensed.

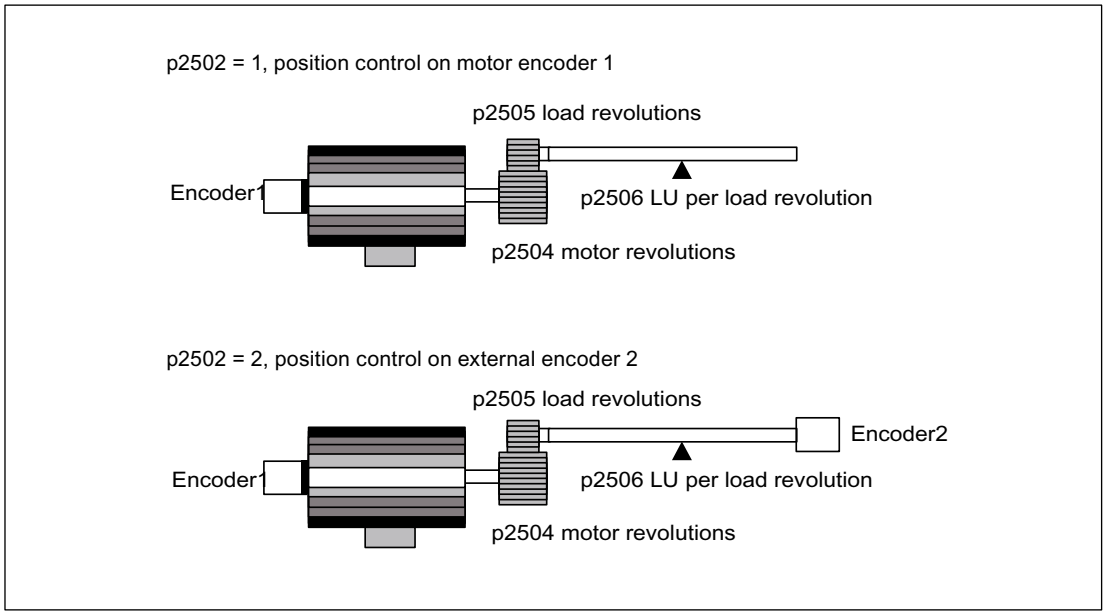

Figure 7-40 Position actual value sensing with rotary encoders

The link between the physical variables and the neutral length unit LU is established via parameter p2506 (LU per load revolution) for rotary encoders. Parameter p2506 mirrors, together with p2504, p2505, the interrelationship between encoder increments and the neutral position unit LU.

Example:

Rotary encoder, ball screw with a pitch of 10 mm/revolution. 10 mm should have a resolution of 1 µm (i.e. 1 LU = 1 µm).

-> One load revolution corresponds to 10000 LU

-> p2506 = 10000

Note

The effective actual value resolution is obtained from the product of the encoder pulses (p0408) and the fine resolution (p0418) and a measuring gear that may be being used (p0432, p0433).

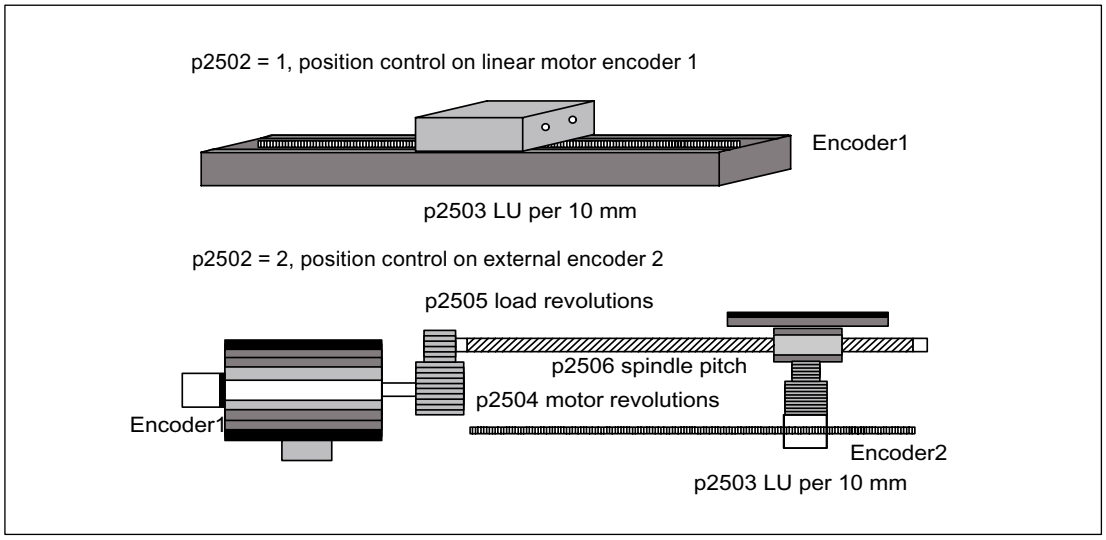

Figure 7-41 Position actual value sensing with linear encoders

For linear encoders, the interrelationship between the physical quantity and the neutral length unit LU is configured using parameter p2503 (LU/10 mm).

Example:

Linear encoder, 10 mm should have a resolution of 1 µm (i.e. 1 LU = 1 µm).

-> p2503 = 10000

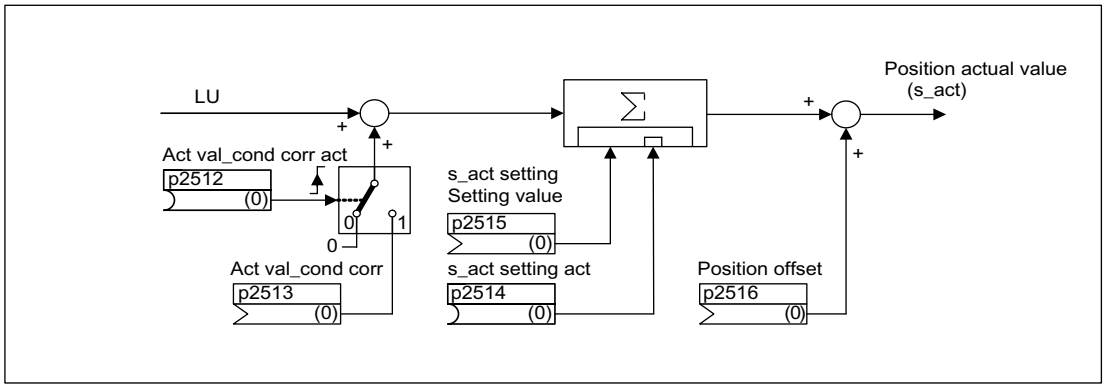

Figure 7-42 Position actual value conditioning

A correction can be made using connector input p2513 (correction value, position actual value conditioning) and a positive edge at binector input p2512 (activates the correction value). When the "basic positioning" function module is activated, p2513 is automatically interconnected with r2685 (EPOS correction value) and p2512 with r2684.7 (activate correction). This interconnection enables modulo offset by EPOS, for example.

p2516 can be used to switch in position offset. Using EPOS, p2516 is automatically interconnected to r2667. Backlash compensation is implemented using this interconnection.

Using the connector input p2515 (position setting value) and a "1" signal at binector input p2514 (set position actual value), a position setting value can be entered.

> ⚠ WARNING
>
> When the actual position value is set (p2514 = "1" signal), the actual position value of the position controller is kept at the value of connector p2515 as standard.
>
> Incoming encoder increments are not evaluated. A difference in position cannot be compensated for in this situation.

An inversion of the actual position value resulting from the encoder is undertaken using parameter p0410. An inversion of the axis motion can be entered using a negative value in p2505.

Load gear position tracking

Features

- Configuration via p2720
- Virtual multiturn via p2721
- Tolerance window for monitoring the position at switching on p2722
- Input of the load gear via p2504 and p2505
- Display via r2723

Prerequisite

- Absolute encoder

Description

Position tracking enables reproduction of the position of the load when gears are used. It can also be used to extend the position area.

Position tracking is activated via parameter p2720.0 = 1. The position tracking of the load gear, however, is only relevant for the motor encoder (encoder 1). The load gear ratio is entered via parameters p2504 and p2505. Position tracking can be activated with rotary axes (modulo).

Position tracking for the load gear can only be activated once for each motor data set MDS.

The load position actual value in r2723 (must be requested via GnSTW.13, see section "Control and status words for encoders") comprises the following information:

- Encoder pulses per revolution (p0408)
- Fine resolution per revolution (p0419)
- Virtual number of stored revolutions of a rotary absolute encoder (p2721)
- Load gear ratio (p2504/p2505)

> **Note**
>
> The sum of p0408, p0419 and p2721 is limited to 32 bits.

Example of position area extension

With absolute encoders without position tracking, it must be ensured that the traversing range is 0 smaller than half the encoder range, because beyond this range, no unique reference remains after switching on and off (see description on parameter p2507). This traversing range can be extended using the virtual multiturn (p2721).

The following diagram illustrates an absolute encoder that can represent 8 encoder revolutions (p0421 = 8).

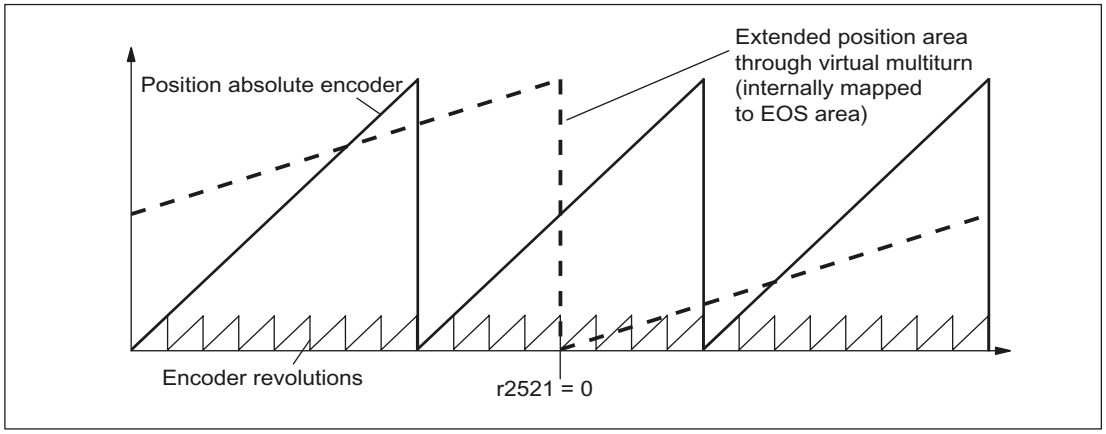

Figure 7-43 Position tracking (p2721 = 24), setting p2504 = p2505 =1 (gear factor = 1)

In this example, this means:

Without position tracking, the position for +/- 4 encoder revolutions about r2521 = 0 LU can be reproduced.

With position tracking, the position for +/- 12 encoder revolutions (+/- 12 load revolutions with load gear) can be reproduced (p2721 = 24).

Practical example:
For a linear axis, the value for p2721 is set to 262144 for an encoder with p0421 = 4096. That means, +/- 131072 encoder revolutions or load revolutions can be reproduced in this way.

For a rotary axis, a value for p2721 = p0421 is set for an encoder.

Configuration of the load gear (p2720).

The following points can be set by configuring this parameter:

- p2720.0: Activation of position tracking
- p2720.1: Setting the axis type (linear or rotary axis)

  Here, a rotary axis refers to a modulo axis (modulo offset can be activated through higher-level control or EPOS). With a linear axis, position tracking is mainly used to extend the position area (see section: Virtual multiturn encoder (p2721)).
- p2720.2: Reset position
  The position values stored in non-volatile memory are reset in response to the following events:
  - When encoder replacement is detected.
  - When the configuration of the encoder data set (EDS) is modified.
  - When the absolute encoder is adjusted again.

Note

If position tracking of the load gear is activated with parameter p2720[0]=1 (position gear load tracking) after the encoder is adjusted (p2507=3), the adjustment will be reset.

If the encoder is adjusted again when load position tracking is active, the load gear position will be reset (overflows).

The permissible position tracking range is mapped onto the reproducible encoder range of EPOS.

Virtual multiturn encoder (p2721)

The virtual multiturn resolution is used to set the number of resolvable motor rotations for a rotary absolute encoder with activated position tracking. It can be edited only for rotary axes.

With a rotary absolute encoder (p0404.1 = 1) with activated position tracking (p2720.0 = 1), p2721 can be used to enter a virtual multiturn resolution.

Note

If the gear factor is not equal to 1, then p2721 always refers to the load side. The virtual resolution, which is required for the load, is then set here.

For rotary axes, the virtual multiturn resolution (p2721) is preset to the value of the multiturn resolution of the encoder (p0421) but may be changed.

Example: Singleturn encoder

Parameter p0421 is preset to p0421 = 1. However, parameter p2721 can be altered subsequently, e.g. the user can program p2721 = 5. As a result, the encoder evaluation initiates 5 load rotations before the same absolute value is achieved again.

For linear axes, the virtual multiturn resolution (p2721) is preset to the multiturn resolution of the encoder (p0421) extended by 6 bits (max. overflows 32 positive/negative)

The value for p2721 cannot be edited again afterwards.

Example: Multiturn encoder

For a linear axis, the value for p2721 is set to 262144 for an encoder with p0421 = 4096. That means, +/- 131072 encoder revolutions or load revolutions can be reproduced in this way.

If, as a result of extension of the multiturn information, the displayable area of r2723 (32 bits) is exceeded, the fine resolution (p0419) must be reduced accordingly.

Tolerance window (p2722)

After switching on, the difference between the stored position and the actual position is ascertained and, depending on the result, the following is triggered:

Difference within the tolerance window -> the position is reproduced based on the current actual encoder value.

Difference outside the tolerance window -> an appropriate message (F07449) is output.

The tolerance window is preset to quarter of the encoder range and can be changed.

⚠ CAUTION

The position can only be reproduced if, in the powered-down state, the encoder was moved through less than half of the range that it can represent. For the standard EQN1325 encoder, this is 2048 revolutions or half a revolution for singleturn encoders.

Note

The ratio stamped on the gear rating plate is often just a rounded-off value (e.g.1:7.34). If, for a rotary axis, it is not permissible to have any long-term drift, then the actual ratio of the gearbox teeth must be requested from the gearbox manufacturer.

Multiple drive data sets

Position tracking of the load gear can be activated in multiple drive data sets.

- The load gear is DDS-dependent.
- Load gear position tracking is computed only for the active drive data set and is EDS-dependent.
- For position tracking to be continued in different drive data sets under the same mechanical conditions and with the same encoder data sets, it must be activated explicitly in all the relevant drive data sets. Possible applications of drive data set switchover with continuation of position tracking:
  - Star/delta switchover
  - Different ramp-up times / controller settings
- When the switchover between drive data sets involves a change in gear unit, the position tracking function starts from the beginning again, i.e. it behaves on switchover as if a POWER ON had occurred.
- For identical mechanical relationships and the same encoder data set, DDS changeover has no effect on the calibration status and reference point status.

Restrictions

- Position tracking cannot be activated for an encoder data set which is used in different drive data sets as encoder1 for different gears. If an attempt is still made to activate position tracking, fault "F07555 (Drive encoder: Configuration position tracking" will be displayed with fault value 03 hex.
  A check is generally performed to determine whether the load gear is the same in all DDS in which the relevant encoder data set is used.
  In this case, the settings in each of the load gear parameters p2504[D], p2505[D], p2720[D], p2721[D] and p2722[D] must be identical.
- If an encoder data set is used in one DDS as a motor encoder with position tracking and in another DDS as an external encoder, the position tracking starts from the beginning again, i.e. it behaves in the same way as it would do after a POWER ON.
- If position tracking is reset in one drive data set, it is also reset in all other drive data sets which contain the relevant encoder data set.
- An axis in an inactive drive data set may move by a maximum of half an encoder range (see p2722: tolerance window).

Commissioning position tracking load gear using STARTER

The position tracking function can be configured in the "Mechanical system" screen for "Position control" in STARTER.
The "Mechanical system" screen for "Position control" is not made accessible unless the function module "Basic positioner" is activated (r0108.4 = 1) which means that the function module "Position control" (r0108.3 = 1) is automatically activated as well.

The "basic positioner" function module can be activated via the commissioning wizard or the drive configuration (configure DDS) (configuration "Closed-loop control structure" - checkbox "Basic positioner").

Configuring the position tracking load gear function

The "Position tracking load gear" function can be configured in the following STARTER screens:

1. In the "Mechanical system configuration" screen in the commissioning wizard.
2. In the project navigator under Drive -> "Technology" -> "Position control" in the "Mechanical system" screen.

Integration

Function diagrams (see SINAMICS S110 List Manual)

- 4010 Position actual value conditioning
- 4704 Position and temperature sensing, encoders 1...2
- 4710 Actual speed value and rotor pos. meas., motor enc. (encoder 1)

Overview of important parameters (see SINAMICS S110 List Manual)

- p2502[0...n] LR encoder assignment
- p2503[0...n] LR length unit LU per 10 mm
- p2504[0...n] LR motor/load motor revolutions
- p2505[0...n] LR motor/load load revolutions
- p2506[0...n] LR length unit LU per load revolution
- r2520[0...n] CO: LR position actual value conditioning encoder control word
- r2521[0...n] CO: LR actual position value
- r2522[0...n] CO: LR actual velocity value
- r2523[0...n] CO: LR measured value
- r2524[0...n] CO: LR LU/revolutions
- r2525[0...n] CO: LR encoder adjustment offset
- r2526[0...n] CO/BO: LR status word
- p2720[0...n] Load gear configuration
- p2721[0...n] Load gear absolute encoder rotary revolutions virtual
- p2722[0...n] Load gear position tracking tolerance window
- r2723[0...n] CO: Load gea absolute value
- r2724[0...n] CO: Load gear position difference

7.3.5.3 Position controller

Features

- Symmetrization (p2535, p2536)
- Limiting (p2540, p2541)
- Pre-control (p2534)
- Adaptation (p2537, p2538)

Note

We only recommend that experts use the position controller functions without using the basic positioner.

Description

The position controller is a PI controller. The P gain can be adapted using the product of connector input p2537 (position controller adaptation) and parameter p2538 (Kp).

Using connector input p2541 (limit), the speed setpoint of the position controller can be limited without pre-control. This connector input is pre-interconnected with connector output p2540.

The position controller is enabled by an AND link of the binector inputs p2549 (position controller 1 enable) and p2550 (position controller 2 enable).

The position setpoint filter (p2533 time constant position setpoint filter) is a PT1 element, the symmetrizing filter as deadtime element (p2535 symmetrizing filter speed pre-control (deadtime) and PT1 element (p2536 symmetrizing filter speed pre-control (PT1)). The speed pre-control p2534 (factor, speed pre-control) can be disabled via the value 0.

Function diagrams (see SINAMICS S110 List Manual)

- 4015 Position controller

Overview of important parameters (see SINAMICS S110 List Manual)

- p2533 LR position setpoint filter, time constant
- p2534 LR speed pre-control factor
- p2535 LR speed pre-control symmetrizing filter dead time
- p2536 LR speed pre-control symmetrizing filter PT1
- p2537 CI: LR position controller adaptation
- p2538 LR proportional gain
- p2539 LR integral action time
- p2540 CO: LR position controller output speed limit
- p2541 CI: LR position controller output speed limit signal source

7.3.5.4 Monitoring functions

Features

- Standstill monitoring (p2542, p2543)
- Positioning monitoring (p2544, p2545)
- Dynamic following error monitoring (p2546, r2563)
- Cam controllers (p2547, p2548, p2683.8, p2683.9)

Description

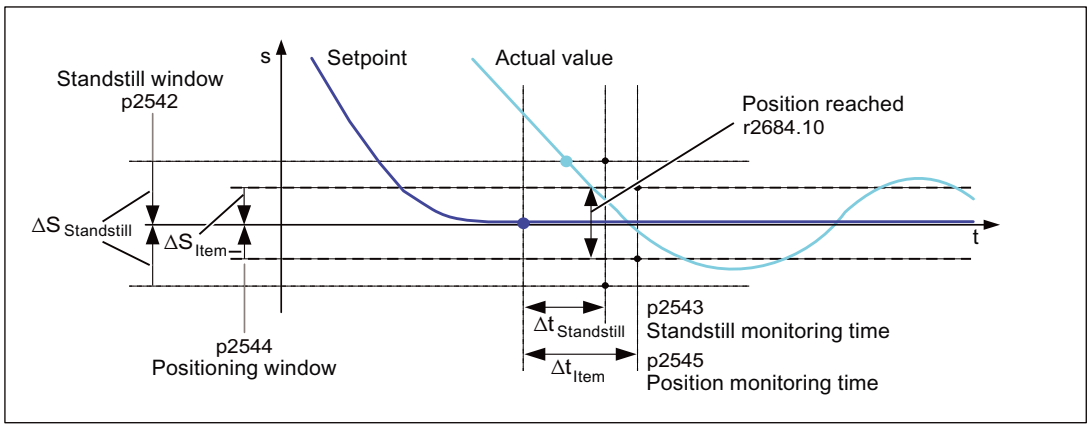

Figure 7-44 Zero-speed monitoring, positioning window

The position controller monitors the standstill, positioning and following error.

Zero-speed monitoring is activated by binector inputs p2551 (setpoint stationary) and p2542 (zero-speed window). If the zero-speed window is not reached once the monitoring time (p2543) has lapsed, fault F07450 is triggered.

Positioning monitoring is activated via binector inputs p2551 (setpoint stationary), p2554 = "0" (travel command not active) and p2544 (positioning window). Once the monitoring time (p2545) has elapsed, the positioning window is checked once. If this is not reached, fault F07451 is triggered.

The standstill monitoring and the positioning monitoring can be de-activated using the value "0" in p2542 and p2544. The standstill window should be greater than or equal to the positioning window (p2542 ≥ p2544). The standstill monitoring time should be less than or equal to the positioning monitoring time (p2543 ≤ p2545).

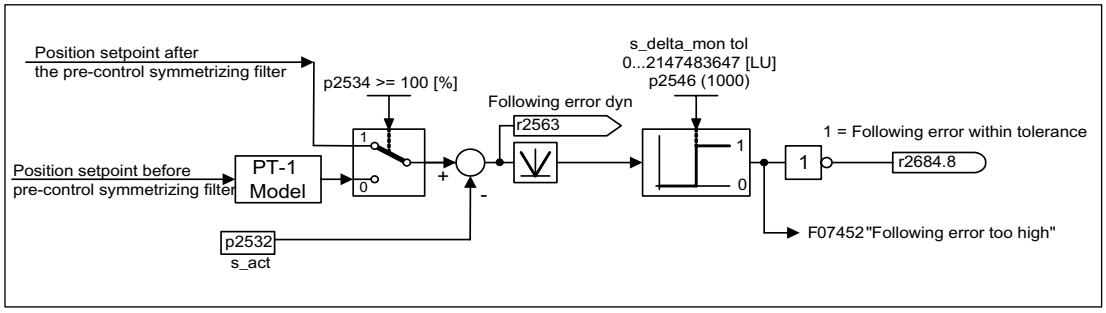

Figure 7-45 Following error monitoring

Following error monitoring is activated via p2546 (following error tolerance). If the absolute value of the dynamic following error (r2563) is greater than p2546, fault F07452 is output and bit r2648.8 is reset.

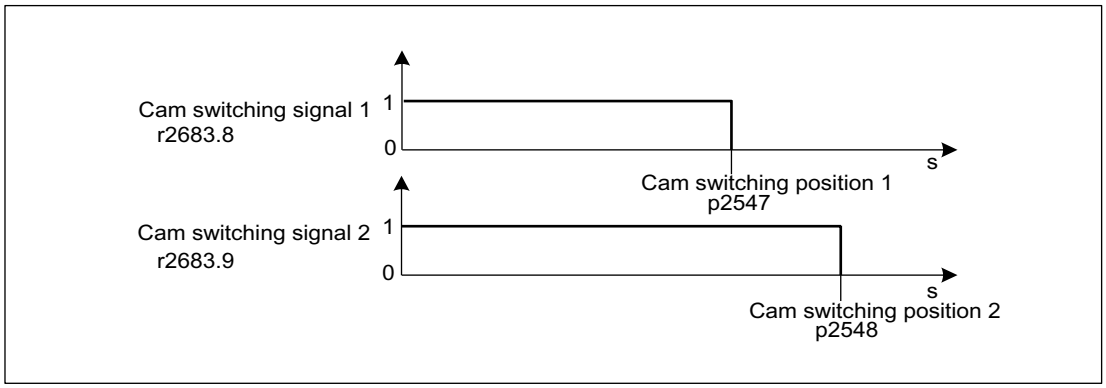

Figure 7-46 Cam controllers

The position controller has two cam controllers. If cam position p2547 or p2548 is passed in the positive direction (p2521 > p2547 or 2548), then cam signals r2683.8 and r2683.9 are reset.

Function diagrams (see SINAMICS S110 List Manual)

- 4020 Zero-speed / positioning monitoring
- 4025 Dynamic following error monitoring, cam controllers

Overview of important parameters (see SINAMICS S110 List Manual)

- p2530 CI: LR setpoint position
- p2532 CI: LR actual position value
- p2542 LR standstill window
- p2543 LR standstill monitoring time
- p2544 LR positioning window
- p2545 LR positioning monitoring time
- p2546 LR dynamic following error monitoring tolerance
- p2547 LR cam switching position 1
- p2548 LR cam switching position 2
- p2551 BI: LR setpoint message present
- p2554 BI: LR travel command message active
- r2563 CO: LR latest following error
- r2683.8 Actual position value <= cam switching position 1
- r2683.9 Actual position value <= cam switching position 2
- r2684 CO/BO: EPOS status word 2

7.3.5.5 Measuring probe evaluation and reference mark search

Description

The "Reference mark search" and "Measuring probe evaluation" functions can be initiated and carried-out via binector input p2508 (activate reference mark search) and p2509 (activate measuring probe evaluation). Binector inputs p2510 (measurement probe selection) and p2511 (measurement probe edge evaluation) define the mode for measurement probe evaluation.

The probe signals are recorded via the encoder encoder status and control word. To speed up signal processing, direct measuring probe evaluation can be activated by selecting the input terminals for probes 1/2 via p2517 and p2518. Measuring probe evaluation is carried out in the position controller cycle, whereby the set send clock cycle of the controller (r2064[1]) must be an integer multiple of the position controller cycle.

The system outputs a message if the same probe input is already being used (see also p0488, p0489 and p0580).

The appropriate function is started using a 0/1 edge at the appropriate input p2508 (activate reference mark search) or p2509 (activate measuring probe evaluation) via the encoder control word. Status bit r2526.1 (reference function) signals that the function is active (feedback from the encoder status word). Status bit r2526.2 (measurement value valid) shows the presence of the measurement required r2523 (position for reference mark or measurement probe).

Once the function is complete (position determined for reference mark or measurement probe), r2526.1 (reference function active) and r2526.2 (measurement valid) continue to remain active and the measurement is provided by r2523 (reference measurement) until the corresponding input p2508 (activate reference mark searches) or p2509 (activate measurement probe evaluation) is reset (0 signal).

If the function (reference mark search or measuring probe evaluation) has still not been completed and the corresponding input p2508 or p2509 is reset, then the function is interrupted via the encoder control word and status bit r2526.1 (reference function active) is reset via the encoder status word.

If both binector inputs p2508 and p2509 are simultaneously set, this causes the active function to be interrupted and no function is started. This is indicated using alarm A07495 "reference function interrupted" and remains until the signals at the binector inputs are reset. The alarm is also generated if, during an activated function (reference mark search or measuring probe evaluation) a fault is signaled using the encoder status word.

If the "position control" function module is selected, these parameters (p2508 to p2511) are preassigned with "0". If the "basic positioner" function module is selected, the functions "reference mark search" (for the function reference point search) and "measuring probe evaluation" (for the function flying referencing) are initiated by the function module basic positioner and the feedback signal (r2526, r2523) is fed back to this (see also: section "Control and status words for encoders").

Function diagrams (see SINAMICS S110 List Manual)

- 4010 Position actual value conditioning
- 4720 Encoder interface, receive signals, encoder 1 ... 2
- 4730 Encoder interface, send signals, encoder 1 ... 2

Overview of important parameters (see SINAMICS S110 List Manual)

- p2508 BI: LR activate reference mark search
- p2509 BI: LR activate measuring probe evaluation
- p2510 BI: LR measuring probe evaluation, selection
- p2511 BI: LR measuring probe evaluation edge
- p2517 LR direct probe 1 input terminal
- p2518 LR direct probe 2 input terminal
- r2523 CO: LR measured value
- r2526 CO/BO: LR status word

7.3.5.6 Integration

The "positon control" function module is integrated in the system as follows:

Commissioning

The configuration screen for "Position control" in STARTER is not made accessible unless the function module "Basic positioner" is activated (r0108.4 = 1) which means that the function module "Position control" (r0108.3 = 1) is automatically activated as well.

The "basic positioner" function module can be activated via the commissioning wizard, drive configuration ("configure DDS"); (configuration "Closed-loop control structure" - checkbox "basic positioner").

To ensure correct, error-free operation of the basic positioner, it is absolutely essential that the "Position control" function module is activated and the position control correctly configured.

If the "position control" function module is active, and to optimize the speed controller, a function generator signal is interconnected to the speed controller input p1160, then the position controller monitoring functions respond. To prevent this from happening, the position controller must be disabled (p2550 = 0) and switch to tracking mode (p2655 = 1, for control using PROFIdrive telegram 110 PosSTW.0 = 1). In this way, the monitoring functions are switched off and the position setpoint is tracked.

Function diagrams (see SINAMICS S110 List Manual)

- 4010 Position actual value conditioning
- 4015 Position controller
- 4020 Zero-speed / positioning monitoring
- 4025 Dynamic following error monitoring, cam controllers

7.3.6 Basic Positioner

General description

The basic positioner is used to position linear and rotary axes (modulo) in absolute/relative terms with motor encoder (indirect measuring system) or machine encoder (direct measuring system).

User-friendly configuration, commissioning, and diagnostic functions are also available in STARTER for the basic positioner functionality (graphic navigation). In STARTER, there is a control panel for the basic positioner and speed-controlled operation; using this control panel, the functionality can be started from a PC/PG to commission the system or carry out diagnostics.

When the basic positioner is activated (r0108.4 = 1), then the position control (r0108.3 = 1) should also be activated. This is realized automatically when activating the basic positioner via the STARTER commissioning wizard. Further, the necessary "internal interconnections" (BICO technology) are automatically established.

⚠ CAUTION
The basic positioner requires the position controller functions. The BICO interconnections established by the basic positioner must be changed by experienced users only.

This means that naturally the position control functions are also available (e.g. standstill monitoring, positioning monitoring, dynamic following error monitoring, cam controllers, modulo function, measuring probe evaluation). Also refer to the section "Position control".

In addition, the following functions can be carried out using the basic positioner:

- Mechanical system
  - Backlash compensation
  - Modulo offset
  - Position tracking of the load gear (motor encoder) with absolute encoders
- Limits
  - Traversing profile limits
  - Traversing range limits
  - Jerk limitation

- Referencing or adjusting
  - Set reference point (for an axis at standstill that has reached its target position)
  - Reference point approach
    (autonomous mode including reversing cam functionality, automatic direction of rotation reversal, referencing to "cams and encoder zero mark" or only "encoder zero mark" or "external equivalent zero mark (BERO)")
  - Flying referencing
    (during the "normal" traversing motion, it is possible to reference, superimposed, using the measuring probe evaluation; generally, evaluating e.g. a BERO. Higher-level (superimposed) function for the modes "jog", direct setpoint input/MDI and "traversing blocks")
  - Referencing with incremental measuring systems
  - Absolute encoder adjustment
- Traversing blocks operating mode
  - Positioning using traversing blocks that can be saved in the drive unit including block change enable conditions and specific tasks for an axis that was previously referenced
  - Traversing block editor using STARTER
  - A traversing block contains the following information:
    traversing block number
    job (e.g. positioning, wait, GOTO block step, setting of binary outputs)
    motion parameters (target position, velocity override for acceleration and deceleration)
    mode (e.g: Skip block, block change enable conditions such as "Continue_with_stop" and "Continue_flying")
    Task parameters (e.g. delay time, block step conditions)
- Direct setpoint input (MDI) mode
  - Positioning (absolute, relative) and setting-up (endless closed-loop position control) using direct setpoint inputs (e.g. via the PLC or process data)
  - It is always possible to influence the motion parameters during traversing (on-the-fly setpoint acceptance) as well as on-the-fly change between the Setup and Positioning modes.
- Jog mode
  - Closed-loop position controlled traversing of the axis with the "endless position controlled" or "jog incremental" modes that can be toggled between (traverse through a "step width")
- Standard PROFIdrive positioning telegrams are available (telegrams 7, 9, 110 and 111). When these are selected, the internal "connection" to the basic positioner is established automatically.
- Control using PROFIdrive telegrams 7 and 110.

7.3.6.1 Mechanical system

Features

- Backlash compensation (p2583)
- Modulo offset (p2577)

Description

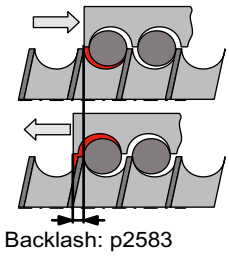

Figure 7-47 Backlash compensation

When mechanical force is transferred between a machine part and its drive, generally backlash occurs. If the mechanical system was to be adjusted/designed so that there was absolutely no play, this would result in high wear. Thus, backlash (play) can occur between the machine component and the encoder. For axes with indirect position sensing, mechanical backlash results in a falsification of the traversing distance, as, at direction reversal, the axis travels either too far or not far enough corresponding to the absolute value of the backlash.

Note

The backlash compensation is active, after

- the axis has been referenced for incremental measuring systems
- the axis has been adjusted for absolute measuring systems

In order to compensate the backlash, the determined backlash must be specified in p2583 with the correct polarity. At each direction of rotation reversal, the axis actual value is corrected dependent on the actual traversing direction and displayed in r2667. This value is taken into account in the position actual value using p2516 (position offset).

If a stationary axis is referenced by setting the reference point or an adjusted axis is powered-up with an absolute encoder, then the setting of parameter p2604 (reference point approach, starting direction) is relevant for switching-in the compensation value.

Table 7- 22 The compensation value is switched in as a function of p2604

p2604	Traversing direction	Switch in compensation value
0	positive	none
	negative	immediately
1	positive	immediately
	negative	none

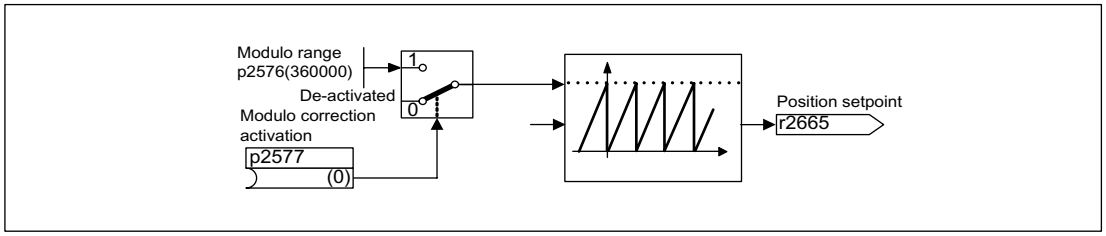

Figure 7-48 Modulo offset

A modulo axis has an unrestricted traversing range. The value range of the position repeats itself after a specific value that can be parameterized (the modulo range or axis cycle), e.g. after one revolution: 360° -> 0°. The modulo range is set in parameter p2576, the offset is activated with parameter p2577. The modulo offset is undertaken at the setpoint end. This is provided with the correct sign via connector output r2685 (correction value) to appropriately correct the position actual value. EPOS initiates the activation of the correction via a rising edge of binector output r2684.7 (activate correction) (r2685 (correction value) and r2684.7 (activate correction) are already connected as standard with the corresponding binector/connector input of the position actual value conditioning). Absolute positioning details (e.g. in a traversing task) must always be within the modulo range. Modulo offset can be activated for linear and rotary length units. The traversing range cannot be limited by a software limit switch.

With active modulo offset and the application of absolute encoders, as a result of potential encoder overflows, it must be ensured that there is an integer ratio v between the multiturn resolution and the modulo range.

The ratio v can be calculated as follows:

- 1. Motor encoder without position tracking:

  v = p0421 * p2506 * p0433 * p2505 / (p0432 * p2504 * p2576)
- 2. Motor encoder with position tracking for the load gear:

  v = p2721 * p2506 * p0433 / (p0432 * p2576)
- 3. Motor encoder with position tracking for the load and measuring gear:

  v = p2721 * p2506 / p2576
- 4. Direct encoder without position tracking:

  v = p0421 * p2506 * p0433 / (p0432 * p2576)

With position tracking it is recommended to change p2721.

Function diagrams (see SINAMICS S110 List Manual)

- 3635 Interpolator
- 4010 Position actual value conditioning

Overview of important parameters (see SINAMICS S110 List Manual)

- p2576 EPOS modulo offset, modulo range
- p2577 BI: EPOS modulo offset activation
- p2583 EPOS backlash compensation
- r2684 CO/BO: EPOS status word 2
- r2685 CO: EPOS correction value

Commissioning with STARTER

In STARTER, the mechanical system screen form can be found under position control.

7.3.6.2 Limits

Description

The velocity, acceleration and deceleration can be limited and the software limit switches and STOP cams set.

Features

- Traversing profile limits
  - Maximum velocity (p2571)
  - Maximum acceleration (p2572) / maximum deceleration (p2573)
- Traversing range limits
  - Software limit switch (p2578, p2579, p2580, p2581, p2582)
  - STOP cams (p2568, p2569, p2570)
- Jerk limitation
  - Jerk limitation (p2574)
  - Activation of jerk limitation (p2575)

Maximum velocity

The maximum velocity of an axis is defined using parameter p2571. The velocity should not be set to be greater than the maximum speeds in r1084 and r1087.

The drive is limited to this velocity if a higher velocity is specified or programmed via the override (p2646) for the reference point approach or is programmed in the traversing block.

Parameter p2571 (maximum velocity) defines the maximum traversing velocity in units 1000 LU/min. If the maximum velocity is changed, then this limits the velocity of a traversing task that is presently being executed.

This limit is only effective in the positioning mode for:

- Jog mode
- Processing traversing blocks
- Direct setpoint input/MDI for positioning/setting-up
- Reference point approach

Maximum acceleration/deceleration

Parameter p2572 (maximum acceleration) and p2573 (maximum deceleration) define the maximum acceleration and the maximum deceleration. In both cases, the units are 1000 LU/s^2.

Both values are relevant for:

- Jog mode
- Processing traversing blocks
- Direct setpoint input/MDI for positioning and setting-up
- Reference point approach

The parameters do not have any effect when faults occur with the fault responses OFF1 / OFF2 / OFF3.

In the traversing blocks mode, the acceleration and deceleration can be set in multiple integer steps (1 %, 2 % ... 100 %) of the maximum acceleration and deceleration. In “direct setpoint input/MDI for positioning and setting up” operating mode, the acceleration/delay override (assignment of 4000 hex = 100%) is specified

Note

A maximum acceleration and/or delay dependent on current velocity (zigzag acceleration) is not supported.

Note

When using the PROFIdrive message frame 110, the velocity override is already connected and has to be supplied by the message frame.

Software limit switches

The connector inputs p2578 (software limit switch minus) and p2579 (software limit switch plus) limit the position setpoint if the following prerequisites are fulfilled:

- The software limit switches are activated (p2582 = "1")
- The reference point is set (r2684.11 = 1)
- The modulo correction is not active (p2577 = "0")

The connector inputs are, in the factory setting, linked to the connector output p2580 (software limit switch minus) and p2581 (software limit switch plus).

STOP cam

A traversing range can, on one hand, be limited per software using the software limit switches and on the other hand, the traversing range can be limited per hardware. In this case, the functionality of the STOP cam (hardware limit switch) is used. The function of the STOP cams is activated by the 1 signal on the binector input p2568 (activation of STOP cams).

Once enabled, the activity of binector inputs p2569 (STOP cam, minus) and p2570 (STOP cam, plus) is checked. These are low active; this means if a 0 signal is present at binector input p2569 or p2570, then these are active.

When a STOP cam (p2569 or p2570) is active, the current motion is halted with the maximum deceleration (p2573) and the appropriate status bit r2684.13 (STOP cam minus active) or r2684.14 (STOP cam plus active) is set.

When an axis has approached a STOP cam, only motion that allows the axis to move away from the cam is permitted (if both STOP cams are actuated, then no motion is possible). When the STOP cam is exited, this is identified by the 0/1 edge in the permitted traversing direction which means that the corresponding status bits (r2684.13 or r2684.14) are reset.

Jerk limitation

Acceleration and deceleration can change suddenly if jerk limiting has not been activated. The diagram below shows the traversing profile when jerk limitation has not been activated. The diagram shows that maximum acceleration (a_{max}) and deceleration (d_{max}) are effective immediately. The drive accelerates until the target speed (v_{target}) is reached and then switches to the constant velocity phase.

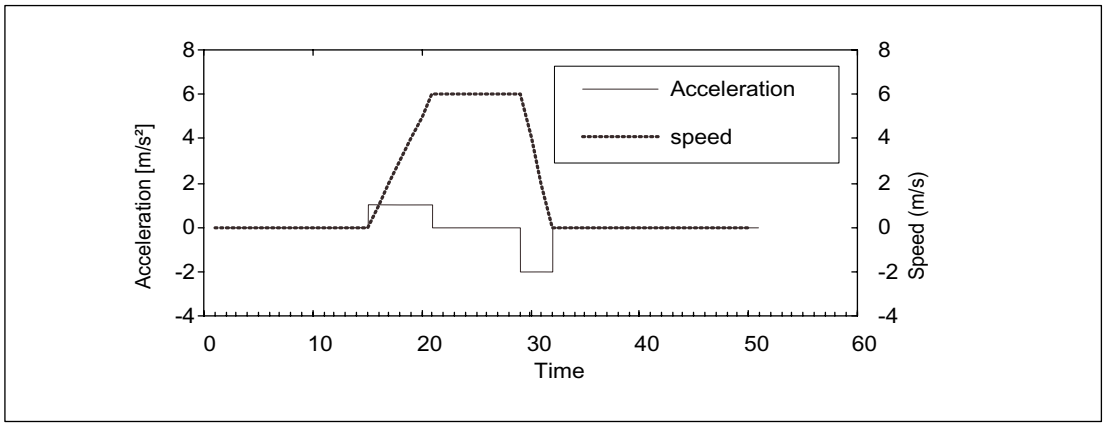

Figure 7-49 Without jerk limitation

Jerk limitation can be used to achieve a ramp-like change of both variables, which ensures "smooth" acceleration and braking as shown in the diagram below. Ideally, acceleration and deceleration should be linear.

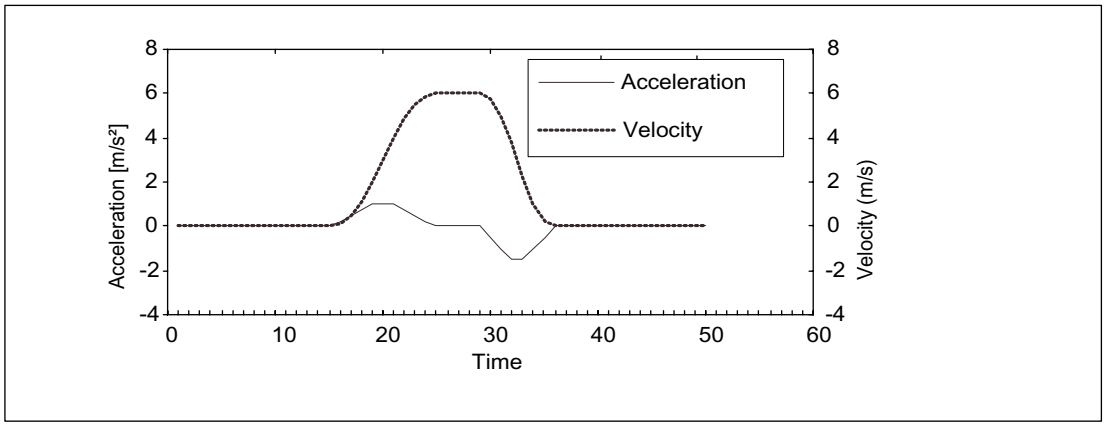

Figure 7-50 Activated jerk limitation

The maximum inclination (r_k) can be set in parameter p2574 ("Jerk limitation") in the unit LU/s³ for both acceleration and braking. The resolution is 1000 LU/s³. To activate limiting permanently, set parameter p2575 ("Active jerk limitation") to 1. In this case, limitation cannot be activated or deactivated in traversing block mode by means of the command "JERK" as this would require parameter p2575 ("Activate jerk limitation") to be set to zero. The status signal r2684.6 ("Jerk limitation active") indicates whether or not jerk limitation is active.

Limitation is effective:

- In jog mode
- When traversing blocks are processed
- When setpoints are defined directly/MDI for positioning and setup
- during referencing
- During stop responses due to alarms

Jerk limitation is not active when messages are generated with stop responses OFF1 / OFF2 / OFF3.

Function diagrams (see SINAMICS S110 List Manual)

- 3630 Traversing range limits

Overview of important parameters (see SINAMICS S110 List Manual)

- p2571 EPOS maximum velocity
- p2572 EPOS maximum acceleration
- p2573 EPOS maximum deceleration
- p2646 CI: EPOS velocity override

Software limit switches

- p2578 CI: EPOS software limit switch, minus signal source
- p2579 CI: EPOS software limit switch, plus signal source
- p2580 CO: EPOS software limit switch, minus
- p2581 CO: EPOS software limit switch, plus
- p2582 BI: EPOS software limit switch activation
- r2683 CO/BO: EPOS status word 1

STOP cam

- p2568 BI: EPOS STOP cam activation
- p2569 BI: EPOS STOP cam, minus
- p2570 BI: EPOS STOP cam, plus
- r2684 CO/BO: EPOS status word 2

7.3.6.3 Referencing

Features

- Reference point offset (p2600)
- Reversing cams (p2613, p2614)
- Reference cam (p2612)
- Binector input start (p2595)
- Binector input setting (p2596)
- Velocity override (p2646)
- Reference point coordinate (p2598, p2599)
- Selecting the referencing type (p2597)
- Absolute encoder adjustment (p2507)

NOTICE
Referencing distance-coded zero marks is not supported.

Description

After a machine has been powered-up, for positioning, the absolute dimension reference must be established to the machine zero. This operation is known as referencing.

The following referencing types are possible:

- Setting the reference point (all encoder types)
- Incremental encoder
  Active referencing (reference point approach (p2597 = 0)):
  - Reference cams and encoder zero mark (p2607 = 1)
  - Encoder zero mark (p0495 = 0)
  - External zero mark (p0495 ≠ 0)
- Flying referencing (passive (p2597 = 1))
- Absolute encoder
  - Absolute encoder adjustment
  - Flying referencing (passive (p2597 = 1))

A connector input is provided for all referencing types to input the reference point coordinate; this allows, e.g. the change/input via the higher-level control. However, to permanently enter the reference point coordinate, an adjustable parameter for this quantity is also required. As standard, this adjustable parameter p2599 is interconnected to connector input p2598.

Set reference point

The reference point can be set using a 0/1 edge at binector input p2596 (set reference point) if no traversing commands are active and the actual position value is valid (p2658 = 1 signal).
A reference point can also be set in conjunction with an intermediate stop.

The current actual position of the drive is set here as the reference point using the coordinates specified by connector input p2598 (reference point coordinates). The setpoint (r2665) is adjusted accordingly.

This function also uses actual position value correction for the position controller (p2512 and p2513). Connector input p2598 is connected to adjustable parameter p2599 as standard. The binector input is not effective for the traversing task being presently executed.

Absolute encoder adjustment

Absolute encoders must be adjusted while commissioning. After the machine has been powered-down the position information of the encoder is kept.

When p2507 = 2 is entered, using the reference point coordinate in p2599, an offset value (p2525) is determined. This is used to calculate the position actual value (r2521). Parameter p2507 signals the adjustment with a "3" - in addition bit r2684.11 (reference point set) is set to "1".

The offset of the encoder adjustment (p2525) should be saved in a non-volatile fashion (RAM to ROM) to permanently save it.

Note

If an adjustment is lost on an already adjusted axis, the axis will remain unadjusted even when the drive unit is switched OFF/ON. The axis needs to be adjusted again in such cases.

⚠ CAUTION

During adjustment with the rotary absolute encoder, a range is aligned symmetrically around the zero point with half the encoder range within which the position is restored after switch off/on. If position tracking is deactivated (2720.0 = 0), only one encoder overflow is permitted to occur in this range (further details are given in chapter Position controller -> Position actual value conditioning). Once adjustment has been carried out, the range must not be exited because a unique reference between the actual encoder value and the mechanical components cannot be established outside the range.

If the reference point p2599 is in the encoder range, the actual position value is set in line with the reference point during adjustment. Otherwise, it is set to a corrected value in the encoder range.

No overflow occurs with linear absolute encoders, which means that the position can be restored within the entire traversing range after switch on/off once adjustment has been carried out. During adjustment, the actual position value is set in line with the reference point.

Reference point approach for incremental measurement systems

When the reference point approach (in the case of an incremental measuring system), the drive is moved to its reference point. In so doing, the drive itself controls and monitors the complete referencing cycle.

Incremental measuring systems require that after the machine has been powered-up, the absolute dimension reference is established to the machine zero point. When powering-up the position actual value x_0 in the non-referenced state is set to $x_0 = 0$. Using the reference point approach, the drive can be reproducibly moved to its reference point. The geometry with a positive starting direction (p2604 = "0") is shown in the following.

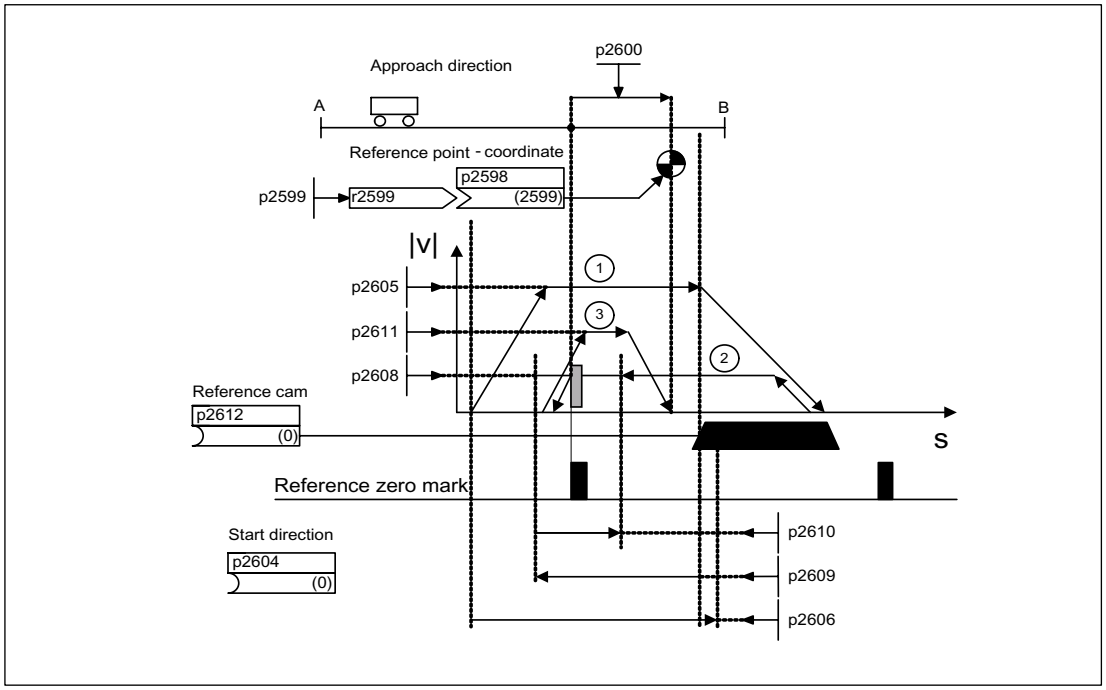

Figure 7-51 Example: reference point approach with reference cam

The signal on binector input p2595 (start referencing) is used to trigger travel to the reference cam (p2607 = 1) if search for reference is selected at the same time (0 signal at binector input p2597 (referencing type selection). The signal in binector input p2595 (start referencing) must be set during the entire referencing process otherwise the process is aborted. Once started, the status signal r2684.11 (reference point set) is reset.

The software limit switch monitoring is inactive during the complete reference point approach; only the maximum traversing range is checked. The SW limit switch monitoring is, if required, re-activated after completion.

The velocity override set is only effective during the search for the reference cam (step 1). This ensures that the "cam end" and "zero mark" positions are always overrun at the same speed. If signal propagation delays arise during switching processes, this ensures that the offset caused during establishment of position is the same in each referencing process.

Axes that only have one zero mark over their complete traversing or modulo range are designated with parameter p2607 = 0 (no reference cam present). After starting the referencing process, synchronization to the reference zero marks is started straight away (see step 2) for these axes.

Search for reference, step 1: travel to reference cam

If there is no reference cam present (p2607 = 0), go to step 2.

When the referencing process is started, the drive accelerates at maximum acceleration (p2572) to the reference cam approach velocity (p2605). The direction of the approach is determined by the signal of binector input p2604 (search for reference start direction).

When the reference cam is reached, this is communicated to the drive using the signal at binector input p2612 (reference cam); the drive then brakes down to standstill with the maximum deceleration (p2573).

If a signal at binector input p2613 (reversing cam, MINUS) or at binector input p2614 (reversing cam, PLUS) is detected during reference point approach, the search direction is reversed.

If the minus reversing cam is approached in the positive direction of travel or the plus reversing cam in the negative direction of travel, fault message F07499 "EPOS: Reversing cam approached from the wrong direction" is generated. In this case, the reversing cam connections must be checked (BI: p2613, BI: p2614) or the direction of approach to the reversing cam.

The reversing cams are low active. If both reversing cams are active (p2613 = "0" and p2614 = "0"), the drive remains stationary. As soon as the reference cam is found, then synchronization to the reference zero mark is immediately started (refer to step 2).

If the axis leaves its start position and travels the distance defined in parameter p2606 (max. distance to reference cam) heading towards the reference cam without actually reaching the reference cam, the drive remains stationary and fault F07458 (reference cam not found) is issued.

If the axis is already located at the cam, when referencing is started, then traversing to the reference cam is not executed, but synchronization to the reference zero mark is immediately started (refer to step 2).

Note

The velocity override is effective during the search for the cam. By changing the encoder data set, status signal r2684.11 (reference point set) is reset.

The cam switch must be able to delivery both a rising and a falling edge. For a reference point approach with evaluation of the encoder zero mark, for increasing position actual values the 0/1 edge is evaluated and for decreasing position actual values, the 1/0 edge. Inversion of the edge evaluation is not possible at the sensor zero mark.

If the length measuring system has several zero marks which repeat at cyclic intervals (e.g. incremental, rotary measuring system), you must ensure that the cam is adjusted so that the same zero mark is always evaluated.

The following factors may impact the behavior of the "reference cam" control signal:

- Switching accuracy and time delay of reference cam switch
- Position controller cycle of drive
- Interpolation cycle of drive
- Temperature sensitivity of machine’s mechanical system

Search for reference, step 2: Synchronizing to the reference zero mark (encoder zero mark or external zero mark)

Reference cam available (p2607 = 1):

In step 2, the drive accelerates to the velocity, specified in p2608 (zero mark approach velocity) in the direction opposite to that specified using binector input p2604 (reference point approach start direction). The zero mark is expected at distance p2609 (max. distance to zero mark). The search for the zero mark is active (status bit r2684.0 = "1" (search for reference active)) as soon as the drive leaves the cam (p2612 = "0") and is within the tolerance band for evaluation (p2609 - p2610). If the position of the zero mark is known (encoder evaluation), the actual position of the drive can be synchronized using the zero mark. The drive starts the search for reference (see step 3). The distance moved between the end of the cam and the zero mark is displayed in diagnostics parameter r2680 (difference between the cam - zero mark).

Encoder zero mark available (p0495 = 0), no reference cam (p2607 = 0):

Synchronization to the reference zero mark begins as soon as the signal at binector input p2595 (start referencing) is detected. The drive accelerates to the velocity, specified in parameter p2608 (zero mark approach velocity) in the direction specified by the signal of binector input p2604 (reference point approach start direction).

The drive synchronizes to the first zero mark and then starts to travel towards the reference point (see step 3).

Note

In this case the direction of approach to the reference zero mark is the opposite to the axes with reference cams!

External zero mark present (p0495 ≠ 0), no reference cam (p2607 = 0):

Synchronization to an external zero mark begins as soon as the signal at binector input p2595 (start referencing) is detected. The drive accelerates to the velocity, specified in parameter p2608 (zero mark approach velocity) in the direction specified by the signal of binector input p2604 (reference point approach start direction). The drive synchronizes to the first external zero mark (p0495). The drive continues to travel with the same velocity and travel is started to the reference point (refer to step 3).

Note

The velocity override is inoperative during this process.

An equivalent zero mark can be set using parameter p0495 (equivalent zero mark input terminal) and the corresponding digital input selected. As standard, for increasing actual position values, the 0/1 edge is evaluated and for decreasing position actual values, the 1/0 edge. For the equivalent zero mark, this can be inverted using parameter p0490 (invert measuring probe or equivalent zero mark).

Search for reference, step 3: Travel to reference point

Travel to the reference point is started when the drive has successfully synchronized to the reference zero mark (see step 2). Once the reference zero mark has been detected, the drive accelerates on-the-fly to the reference point approach velocity set in parameter p2611. The reference point offset (p2600), the distance between the zero mark and reference point, is extended.

If the axis has reached the reference point, then the position actual value and setpoint are set to the value specified using connector input p2598 (reference point coordinate) (as standard, connector input p2598 is connected with adjustable parameter p2599). The axis is then homed and the status signal r2684.11 (reference point set) set.

Note

The velocity override is inoperative during this process.

If the braking distance is longer than the reference point offset or a direction reversal is required as a result of the selected reference point offset, then after detecting the reference zero mark, the drive initially brakes to standstill and then travels back.

Flying referencing

The mode "flying referencing" (also known as post-referencing, positioning monitoring), which is selected using a "1" signal at binector input p2597 (select referencing type), can be used in every mode (jog, traversing block and direct setpoint input for positioning/setting-up) and is superimposed on the currently active mode. Flying referencing can be selected both with incremental and absolute measuring systems.

When "flying referencing" during incremental positioning (relative) you can select whether the offset value is to be taken into account for the travel path or not (p2603).

The "flying referencing" is activated by a 0/1 edge at binector input p2595 (start referencing). The signal in binector input p2595 (start referencing) must be set during the entire referencing process otherwise the process is aborted.

Status bit r2684.1 (passive/flying referencing active) is linked with binector input p2509 (activate measurement probe evaluation). It activates measurement probe evaluation. Binector inputs p2510 (measurement probe selection) and p2511 (measurement probe edge evaluation) can be used to set which measurement probe (1 or 2) and which measurement edge (0/1 or 1/0) is to be used.

The measurement probe pulse is used to supply connector input p2660 (home measurement value) with the measurement via parameter r2523. The validity of the measurement is reported to binector input p2661 (measurement valid feedback) via r2526.2.

Note

The following must always apply to the "Flying referencing mode" windows:

p2602 (outer window) > p2601 (inner window).

See function diagram 3614 for more information on the "Flying referencing mode" function.

The following then happens:

- If the drive has not yet been homed, status bit r2684.11 (reference point set) is set to "1".
- If the drive has already been homed, status bit r2684.11 (reference point set) is not reset when starting flying referencing.
- If the drive has already been homed and the position difference is less than the inner window (p2601), the old actual position value is retained.
- If the drive has already been homed and the position difference is more than the outer window (p2602), warning A07489 (reference point offset outside window 2) is output and the status bit r2684.3 (pressure mark outside window 2) set. No offset to the actual position value is undertaken.
- If the drive has already been referenced and the absolute value of the position difference is greater than the inner window (p2601) and less the outer window (p2602), then the position actual value is corrected.

Note

Flying referencing is not an active operating mode. It is superimposed by an active operating mode.

In contrast to searches for reference, flying referencing can be carried out superimposed by the machine process.

As standard, for flying referencing, measuring probe evaluation is used; when enabled, the measuring probe is selected (p2510) and the edge evaluation (p2511) (in the factory setting, measuring probe 1 is always the measuring probe, flank evaluation in the factory setting is always the 0/1 edge).

Instructions for switching data sets

In the following cases, when a DDS switch takes place, the current actual position value becomes invalid (p2521 = 0) and the reference point (r2684.11 = 0) is reset.

- The EDS that is effective for the position control changes.
- The encoder assignment changes (p2502).
- The mechanical relationships change (p2503...p2506)

With absolute encoders, the status of the adjustment (p2507) is also reset, if the same absolute encoder is selected for the position control although the mechanical relationships have changed (p2503 ... p2506).

In operating mode, a fault message (F07494) is also generated.

Function diagrams (see SINAMICS S110 List Manual)

- 3612 Referencing
- 3614 Flying referencing

Overview of important parameters (see SINAMICS S110 List Manual)

- p2596 BI: EPOS set reference point
- p2597 BI: EPOS referencing type selection
- p2598 CI: EPOS reference point coordinate, signal source
- p2599 CO: EPOS reference point coordinate value
- p2600 EPOS reference point approach, reference point offset

7.3.6.4 Traversing blocks

Description

Up to 16 different traversing blocks can be saved. The maximum number is set using parameter p2615 (maximum number of traversing tasks). All parameters which describe a traversing order are effective during a block change, i.e. if:

- The appropriate traversing block number is selected using binector inputs p2625 to p2630 (block selection, bits 0...5) and started using the signal at binector input p2531 (activate traversing task).
- A block change is made in a sequence of traversing tasks.
- An external block change p2632 "External block change" is triggered.

Traversing blocks are parameterized using parameter sets that have a fixed structure:

- Traversing block number (p2616[0...63])
  Every traversing block must be assigned a traversing block number (in STARTER "No.").
  The traversing blocks are executed in the sequence of the traversing block numbers.
  Numbers containing the value "-1" are ignored so that the space can be reserved for subsequent traversing blocks, for example.

  You can use traversing block numbers in the range from 0 ... 63, regardless of the maximum number of traversing blocks (= 16).
- Task (p2621[0...9])
  1: POSITIONING
  2: FIXED ENDSTOP
  3: ENDLESS_POS
  4: ENDLESS_NEG
  5: WAIT
  6: GOTO
  7: SET_O
  8: RESET_O
  9: JERK
- Motion parameters
  - Target position or traversing distance (p2617[0...63])
  - Velocity (p2618[0...63])
  - Acceleration override (p2619[0...63])
  - Deceleration override (p2620[0...63])
- Task mode (p2623[0...63])
  The execution of a traversing task can be influenced by parameter p2623 (task mode).

This is automatically written by programming the traversing blocks in STARTER.
Value = 0000 cccc bbbb aaaa

– aaaa: Display/hide
  0000: Block is not hidden
  0001: Block is hidden
  A hidden block cannot be selected binary-coded via binector inputs p2625 to p2630. An alarm is output if you attempt to do so.

– bbbb: Continuation condition
  0000, END: 0/1 edge at p2631
  0001, CONTINUE_WITH_STOP:
  The exact position parameterized in the block is approached (brake to standstill and positioning window monitoring) before block processing can continue.
  0010, CONTINUE_ON-THE-FLY:
  The system switches to the next traversing block "on the fly" when the braking point for the current block is reached (if the direction needs to be changed, this does not occur until the drive stops within the positioning window).
  0011, CONTINUE_EXTERNAL:
  Same as "CONTINUE_ON-THE-FLY", except that an instant block change can be triggered up to the braking point by a 0/1 edge. The 0/1 edge can be connected to parameter r2526.2 of the "position control" function module, via the binector input p2633 with p2632 = 1, or via the measuring input p2661 with p2632 = 0. Position detection via the measuring input can be used as an accurate starting position for relative positioning. If an external block change is not triggered, a block change is triggered at the braking point.
  0100, CONTINUE_EXTERNAL_WAIT
  Control signal "External block change" can be used to trigger a flying changeover to the next task at any time during the traveling phase. If "External block change" is not triggered, the axis remains in the parameterized target position until the signal is issued. The difference here is that with CONTINUE_EXTERNAL, a flying changeover is carried out at the braking point if "External block change" has not been triggered, while here the drive waits for the signal in the target position.
  0101, CONTINUE_EXTERNAL_ALARM
  This is the same as CONTINUE_EXTERNAL_WAIT, except that alarm A07463 "External traversing block change in traversing block x not requested" is output when "External block change" is not triggered by the time the drive comes to a standstill. The alarm can be converted to a fault with a stop response so that block processing can be aborted if the control signal is not issued.

– cccc: positioning mode
  With the POSITON task (p2621 = 1), defines how the position specified in the traversing task is to be approached.
  0000, ABSOLUTE:
  The position specified in p2617 is approached.
  0001, RELATIVE:
  The axis is traveled along the value specified in p2617.
  0010, ABS_POS:
  For rotary axes with modulo offset only. The position specified in p2617 is approached in a positive direction.
  0011, ABS_NEG:
  For rotary axes with modulo offset only. The position specified in p2617 is approached in a negative direction.

- Task parameter (command-dependent significance) (p2622[0...63])

Intermediate stop and reject traversing task

The intermediate stop is activated by a 0 signal at p2640. After activation, the system brakes with the parameterized deceleration value (p2620 or p2645).

The current traversing task can be rejected by a 0 signal at p2641. After activation, the system brakes with the maximum deceleration (p2573).

The "intermediate stop" and "reject traversing task" functions are only effective in "traversing blocks" and "direct setpoint input/MDI" modes.

POSITIONING

The POSITIONING task initiates motion. The following parameters are evaluated:

- p2616[x] Block number
- p2617[x] Position
- p2618[x] Velocity
- p2619[x] Acceleration override
- p2620[x] Acceleration override
- p2623[x] Task mode

The task is executed until the target position is reached. If, when the task is activated, the drive is already located at the target position, then for the block change enable (CONTINUE_ON-THE-FLY or CONTINUE_EXTERNAL, the text task is selected in the same interpolation clock cycle. For CONTINUE_WITH_STOP, the next block is activated in the next interpolation clock cycle. CONTINUE_EXTERNAL_ALARM causes a message to be output immediately.

FIXED STOP

The FIXED STOP task triggers a traversing movement with reduced torque to fixed stop.

The following parameters are relevant:

- p2616[x] Block number
- p2617[x] Position
- p2618[x] Velocity
- p2619[x] Acceleration override
- p2620[x] Acceleration override
- p2623[x] Task mode
- p2622[x] Clamping torque [0.01 Nm] task parameter for rotary motors.

Possible continuation conditions include END, CONTINUE_WITH_STOP, CONTINUE_EXTERNAL, CONTINUE_EXTERNAL_WAIT.

ENDLESS POS, ENDLESS NEG

Using these tasks, the axis is accelerated to the specified velocity and is moved, until:

- A software limit switch is reached.
- A STOP cam signal has been issued.
- The traversing range limit is reached.
- Motion is interrupted by the control signal "no intermediate stop/intermediate stop (p2640).
- Motion is interrupted by the control signal "do not reject traversing task/reject traversing task" (p2641).
- An external block change is triggered (with the appropriate continuation condition).

The following parameters are relevant:

- p2616[x] Block number
- p2618[x] Velocity
- p2619[x] Acceleration override
- p2623[x] Task mode

All continuation conditions are possible.

JERK

Jerk limitation can be activated (command parameter = 1) or deactivated (task parameter = 0) by means of the JERK task. The signal at the binector input p2575 "Active jerk limitation" must be set to zero. The value parameterized in "jerk limit" p2574 is the jerk limit.

A precise stop is always carried out here regardless of the parameterized continuation condition of the task preceding the JERK task.

The following parameters are relevant:

- p2616[x] Block number
- p2622[x] Task parameter = 0 or 1

All continuation conditions are possible.

WAITING

The WAIT order can be used to set a waiting period, which should expire before the following order is processed.

The following parameters are relevant:

- p2616[x] Block number
- p2622[x]Task parameter = delay time in milliseconds ≥ 0 ms
- p2623[x] Task mode

The delay time is entered in milliseconds - but is rounded-off to a multiple of the interpolator clock cycle p0112[5]. The minimum delay time is one interpolation clock cycle; this means that if a delay time is parameterized which is less than an interpolation clock cycle, then the system waits for one interpolation clock cycle.

Example:

Wait time: 9 ms
Interpolation clock cycle: 4 ms
Active delay time: 12 ms

A precise stop is always carried out here before the wait time, regardless of the parameterized continuation condition of the order preceding the WAIT order. The WAIT task can be executed by an external block change.

Possible continuation conditions include END, CONTINUE_WITH_STOP, CONTINUE_EXTERNAL, CONTINUE_EXTERNAL_WAIT, and CONTINUE_EXTERNAL_ALARM. The fault message is triggered when "External block change" has still not been issued after the delay time has elapsed.

GOTO

Using the GOTO task, jumps can be executed within a sequence of traversing tasks. The block number which is to be jumped to must be specified as task parameter. A continuation condition is not permissible. If there is a block with this number, then alarm A07468 (jump destination does not exist in traversing block x) is output and the block is designated as being inconsistent.

The following parameters are relevant:

- p2616[x] Block number
- p2622[x] Task parameter = Next traversing block number

Any two of the SET_O, RESET_O and GOTO orders can be processed in an interpolation cycle and a subsequent POSITION and WAIT order can be started.

SET_O, RESET_O

Tasks SET_O and RESET_O allow up to two binary signals (output 1 or 2) to be simultaneously set or reset. The number of the output (1 or 2) is specified bit-coded in the task parameter.

The following parameters are relevant:

- p2616[x] Block number
- p2622[x] Task parameter = bit-coded output:
  0x1: Output 1
  0x2: Output 2
  0x3: Output 1 + 2

Possible continuation conditions are END, CONTINUE_ON-THE-FLY and CONTINUE_WITH_STOP, and CONTINUE_EXTERNAL_WAIT.

The binary signals (r2683.10 (output 1) (or r2683.11 (output 2)) can be assigned to digital outputs. The assignment in STARTER is made using the button "configuration digital output".

Any two of the SET_O, RESET_O and GOTO orders can be processed in an interpolation cycle and a subsequent POSITION and WAIT order can be started.

Function diagrams (see SINAMICS S110 List Manual)

- 3616 Traversing blocks operating mode

Overview of important parameters (see SINAMICS S110 List Manual)

- p2616 EPOS traversing block, block number
- p2617 EPOS traversing block, position
- p2618 EPOS traversing block, velocity
- p2619 EPOS traversing block, acceleration override
- p2620 EPOS traversing block, deceleration override
- p2621 EPOS traversing block, task
- p2622 EPOS traversing block, task parameter
- p2623 EPOS traversing block, task mode
- p2625...p2630 BI: EPOS block selection bits 0 ... 5

7.3.6.5 Travel to fixed stop

Description

The "Travel to fixed stop" function can be used, for example, to traverse sleeves to a fixed stop against the workpiece with a predefined torque. In this way, the workpiece can be securely clamped. The clamping torque can be parameterized in the traversing task (p2622). An adjustable monitoring window for travek to fixed stop prevents the drive from traveling beyond the window if the fixed stop should break away.

In positioning mode, travel to fixed stop is started when a traversing block is processed with the FIXED STOP command. In this traversing block, in addition to the specification of the dynamic parameterized position, speed, acceleration override and delay override, the required clamping torque can be specified as task parameter p2622. From the start position onwards, the target position is approached with the parameterized speed. The fixed stop (the workpiece) must be between the start position and the braking point of the axis; that is, the target position is placed inside the workpiece. The preset torque limit is effective from the start, i.e. travel to fixed stop also occurs with a reduced torque. The preset acceleration and delay overrides and the current speed override are also effective. Dynamic following error monitoring (p2546) in the position controller is not effective when traveling to the fixed stop. As long as the drive travels to the fixed stop or is in fixed stop, the "Travel to fixed stop active" status bit r2683.14 is active.

Fixed stop is reached

As soon as the axis comes into contact with the mechanical fixed stop, the closedloop control in the drive raises the torque so that the axis can move on. The torque increases up to the value specified in the task and then remains constant. Depending on the binector input p2637 (fixed stop reached), the "fixed stop reached" status bit r2683.12 is set if:

- the following error exceeds the value set in parameter p2634 (fixed stop: maximum following error) (p2637 = r2526.4)
- external status via the signal at binector input p2637 (fixed stop reached), if this p2637 ≠ r2526.4)

In travel to fixed stop, the clamping torque or clamping force in the traversing block is configured via the task parameter. This is specified in units of 0.01 Nm (rotary motor). The function module is coupled to the torque limit of the basic system via the connector output r2686[0] (torque limit upper) or r2686[1] (torque limit lower), which are connected to the connector input p1528 (torque limit upper scaling) or p1529 (torque limit lower scaling). The connector outputs r2686[0] (torque limit upper) and r2686[1] (torque limit lower) are set to 100% when fixed stop is not active. During active fixed stop, r2686[0] (torque limit upper) or r2686[1] (torque limit lower) are evaluated as a percentage of p1522/p1523 in such a way that the specified clamping torque or clamping force is limited.

When the fixed stop is acknowledged (p2637), the "Speed setpoint total" (p2562) is frozen, as long as the binector input p2553 (fixed stop reached message) is set. The speed control holds the setpoint torque due to the applied speed setpoint. The setpoint torque is output for diagnosis via the connector output r2687 (torque setpoint).

If the parameterized clamping torque is reached at the fixed stop, the status bit r2683.13 "Fixed stop clamping torque reached" is set.

Once the "Fixed stop reached" status has been detected, the traversing task "Travel to fixed stop" is ended. The program advances to the next block depending on the task parameterization. The drive remains in fixed stop until the next positioning task is processed or the system is switched to jog mode. The clamping torque is therefore also applied during subsequent waiting tasks. The continuation condition CONTINUE_EXTERNAL_WAIT can be used to specify that the drive must remain at the fixed stop until a step enabling signal is applied externally.

As long as the drive remains in fixed stop, the position setpoint is adjusted to the actual position value (position setpoint = actual position value). Fixed stop monitoring and controller enable are active.

Note

If the drive is in fixed stop, it can be referenced using the control signal "Set reference point."

If the axis leaves the position that it had at detection of the fixed stop by more than the selected monitoring window for the fixed stop p2635, then the status bit r2683.12 is reset. At the same time, the speed setpoint is set to zero, and fault F07484 "Fixed stop outside of the monitoring window" is triggered with the reaction OFF3 (quick stop). The monitoring window can be set using the parameter p2635 ("Fixed stop monitoring window"). It applies to both positive and negative traversing directions and must be selected such that it will only be triggered if the axis breaks away from the fixed stop.

Fixed stop is not reached

If the brake application point is reached without the "fixed stop reached" status being detected, then the fault F07485 "Fixed stop is not reached" is output with fault reaction OFF1, the torque limit is canceled and the drive cancels the traversing block.

Note

- The fault can be changed into an alarm (see section "Message configuration"), which means that the drive program will advance to the next specified block.
- The target point must be sufficiently far inside the workpiece.

Interruption to "Travel to fixed stop"

The "travel to fixed stop" traversing task can be interrupted and continued using the "intermediate stop" signal at the binector input p2640. The block is canceled using the binector input signal p2641 "Reject traversing task" or by removing the controller enable. In all of these cases, the drive is correspondingly braked. Measures are taken to prevent any risk of damage if the block is canceled when an axis has almost reached the fixed stop (setpoint already beyond the fixed stop, but still within the threshold for fixed stop detection). For this purpose, the position setpoint is made to follow the actual position value after standstill. As soon as the fixed stop is reached, the drive remains in fixed stop even after cancelation. It can be moved away from the fixed stop using jog or by selecting a new traversing task.

Note

The fixed stop monitoring window (p2635) is only activated when the drive is at the fixed stop and remains active until the fixed stop is exited.

Vertical axis

Note

In servo mode, a torque limit offset (p1532) can be entered for vertical axes (see also chapter: Servo control -> Vertical axis).

With asymmetrical torque limits p1522 and p1523, the net weight is taken into account for travel to fixed stop in parameters r2686 and r2687.

If, for example, with a suspended load, p1522 is set to +1000 Nm and p1523 to -200 Nm, then a net weight of 400 Nm (p1522 - p1523) is assumed. If the clamping torque is now configured as 400 Nm, then r2686[0] is preset to 80%, r2686[1] to 0% and r2687 to 800 Nm when travel to fixed stop is activated.

Function diagrams (see SINAMICS S110 List Manual)

- 3616 Traversing blocks mode (r0108.4 = 1)
- 3617 Travel to fixed stop (r0108.4 = 1)
- 4025 Dynamic following error monitoring, cam controllers (r0108.3 = 1)

Overview of important parameters (see SINAMICS S110 List Manual)

- p1528 CI: Torque limit, upper/motoring, scaling
- p1529 CI: Torque limit, lower/regenerative scaling
- p1545 BI: Activate travel to fixed stop
- r2526 CO/BO: LR status word
- p2622 EPOS traversing block, task parameter
- p2634 EPOS Fixed stop maximum permissible following error
- p2635 EPOS Fixed stop monitoring window
- p2637 BI: EPOS Fixed stop reached
- p2638 BI: EPOS Fixed stop outside monitoring window

- r2683 CO/BO: EPOS status word 1
- r2686 CO: EPOS Torque limit effective

7.3.6.6 Direct setpoint input (MDI)

Features

- Select direct setpoint input (p2647)
- Select positioning type (p2648)
- Direction selection (p2651, p2652)
- Setting-up (p2653)
- Fixed setpoints
  - CO: Position setpoint (p2690)
  - CO: Velocity setpoint (p2691)
  - CO: Acceleration override (p2692)
  - CO: Deceleration override (p2693)
- Connector inputs
  - CI: MDI position setpoint (p2642)
  - CI: MDI velocity setpoint (p2643)
  - CI: MDI acceleration override (p2644)
  - CI: MDI deceleration override (p2645)
  - CI: Velocity override (p2646)
- Accept (p2649, p2650)

Description

The direct setpoint input function allows for positioning (absolute, relative) and setup (endless position-controlled) by means of direct setpoint input (e.g. via the PLC using process data).

During traversing, the motion parameters can also be influenced (on-the-fly setpoint acceptance) and an on-the-fly change can be undertaken between the Setup and Positioning modes. The "direct setpoint input" mode (MDI) can also be used if the axis is not referenced in the "setup" or "relative positioning" modes, which means that "flying referencing" (see the separate section), flying synchronization, and post-referencing are possible.

The direct setpoint input function is activated by p2647 = 1. A distinction is made between two modes: positioning mode (p2653 = 0) and setup mode (p2653 = 1).

In "positioning" mode, the parameters (position, velocity, acceleration and deceleration) can be used to carry out absolute (p2648 = 1) or relative (p2648 = 0) positioning with the parameter p2690 (fixed setpoint position).

In the setting-up mode, using parameters (velocity, acceleration and deceleration) "endless" closed-loop position control behavior can be carried out.

It is possible to make a flying changeover between the two modes.

If continuous acceptance (p2649 = 1) is activated, changes to the MDI parameters are accepted immediately. Otherwise the values are only accepted when there is a positive edge at binector input p2650 (setpoint acceptance edge).

Note

Continuous acceptance p2649 = 1 can only be set with free telegram configuration p0922 = 999. No relative positioning is allowed with continuous acceptance.

The direction of positioning can be specified using p2651 (positive direction specification) and p2652 (negative direction specification). If both inputs have the same status, the shortest distance is traveled during absolute positioning (p2648 = "1") of modulo axes (p2577 = "1").

To use the positioning function, the drive must be in operating mode (r0002 = 0). The following options are available for starting positioning:

- p2649 is "1" and positive edge on p2647
- p2649 is "0" and p2647 is "1"
  - positive edge on p2650 or
  - positive edge on p2649

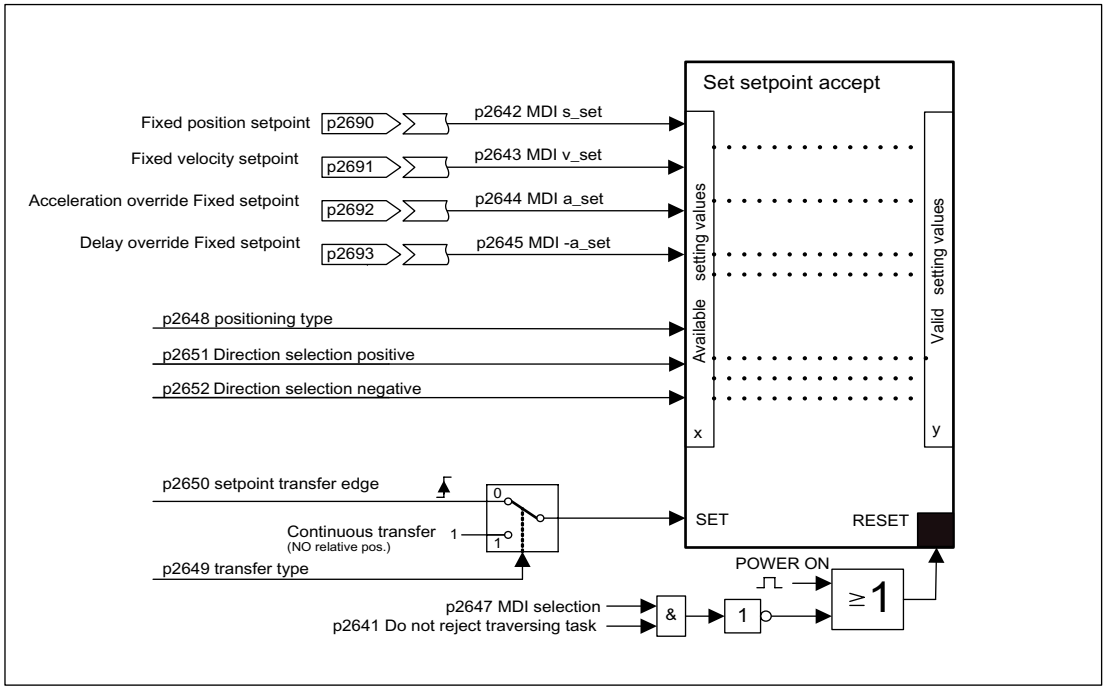

Figure 7-52 Setpoint transfer

MDI mode with the use of PROFIdrive telegram 110.

If the connector input p2654 is preset with a connector input <> 0 (e.g. with PROFIdrive telegram 110 with r2059[11]), then it will internally manage the control signals "Select

positioning type", "Positive direction selection" and "Negative direction selection". The following characteristics are evaluated from the value of the connector input:

- xx0x = absolute -> p2648
- xx1x = relative -> p2648
- xx2x = ABS_POS -> p2648, p2651
- xx3x = ABS_NEG -> p2648, p2652

Intermediate stop and reject traversing task

The intermediate stop is activated by a 0 signal at p2640. After activation, the system brakes with the parameterized deceleration value (p2620 or p2645).

The current traversing task can be rejected by a 0 signal at p2641. After activation, the system brakes with the maximum deceleration (p2573).

The "intermediate stop" and "reject traversing task" functions are only effective in "traversing blocks" and "direct setpoint input/MDI" modes.

Function diagrams (see SINAMICS S110 List Manual)

- 3618 EPOS - direct setpoint input mode/MDI, dynamic values
- 3620 EPOS - direct setpoint input mode/MDI

Overview of important parameters (see SINAMICS S110 List Manual)

- p2577 BI: EPOS modulo offset activation
- p2642 CI: EPOS direct setpoint input/MDI, position setpoint
- p2643 CI: EPOS direct setpoint input/MDI, velocity setpoint
- p2644 CI: EPOS direct setpoint input/MDI, acceleration override
- p2645 CI: EPOS direct setpoint input/MDI, delay override
- p2648 BI: EPOS direct setpoint input/MDI, positioning type
- p2649 BI: EPOS direct setpoint input/MDI, acceptance type
- p2650 BI: EPOS direct setpoint input/MDI, setpoint acceptance edge
- p2651 BI: EPOS direct setpoint input/MDI, positive direction selection
- p2652 BI: EPOS direct setpoint input/MDI, negative direction selection
- p2653 BI: EPOS direct setpoint input/MDI, setup selection
- p2654 CI: EPOS direct setpoint input/MDI, mode adaptation
- p2690 CO: EPOS position, fixed setpoint
- p2691 CO: EPOS velocity, fixed setpoint
- p2692 CO: EPOS acceleration override, fixed setpoint
- p2693 CO: EPOS delay override, fixed setpoint

7.3.6.7 Jog

Features

- Jog signals (p2589, p2590)
- Velocity (p2585, p2586)
- Incremental (p2587, p2588, p2591)

Description

Using parameter p2591 it is possible to change over between jog incremental and jog velocity.

The traversing distances p2587 and p2588 and velocities p2585 and p2586 are entered using the jog signals p2589 and p2590. The traversing distances are only effective for a "1" signal at p2591 (jog, incremental). For p2591 = "0" then the axis moves to the start of the traversing range or the end of the traversing range with the specified velocity.

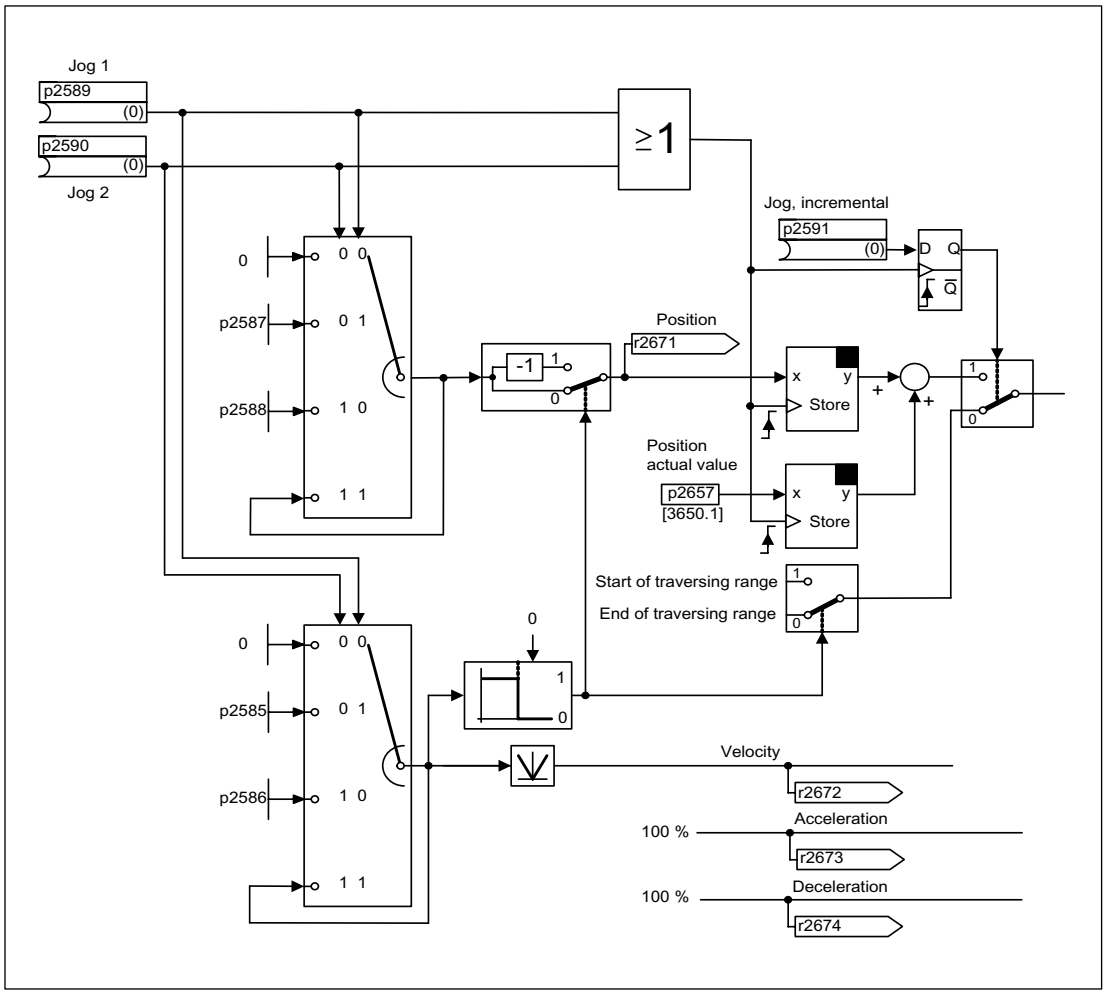

Figure 7-53 Jog mode

Function diagrams (see SINAMICS S110 List Manual)

- 3610 EPOS - jog mode

Overview of important parameters (see SINAMICS S110 List Manual)

- p2585 EPOS jog 1 setpoint velocity
- p2586 EPOS jog 2 setpoint velocity
- p2587 EPOS jog 1 traversing distance
- p2588 EPOS jog 2 traversing distance
- p2589 BI: EPOS jog 1 signal source
- p2590 BI: EPOS jog 2 signal source
- p2591 BI: EPOS jog incremental

7.3.6.8 Status signals

The status signals relevant to positioning mode are described below.

Tracking mode active (r2683.0)

The "Follow-up active mode" status signal shows that follow-up mode has been activated which can be done by binector input p2655 (follow-up mode) or by a fault. In this status, the position setpoint follows the actual position value, i.e. position setpoint = actual position value.

Setpoint static (r2683.2)

The status signal "setpoint static" indicates that the setpoint velocity has a value of 0. The actual velocity can deviate from zero due to a following error. While the status word has a value of 0, a traversing task is being processed.

Traversing command active (r2684.15)

The status signal "traversing command active" indicates that a traversing command is active. A motion command should be understood to comprise all motions (including jog, setup etc.). Contrary to the status signal "setpoint static", the status signal remains active - e.g. if a traversing command was stopped by a velocity override or intermediate stop.

SW limit switch + reached (r2683.7)
SW limit switch - reached (r2683.6)

These status signals indicate that the parameterized negative p2578/p2580 or positive p2579/p2581 traversing range limit was reached or passed. If both status signals are 0, the drive is located within the traversing limits.

Stop cam minus active (r2684.13)
Stop cam plus active (r2684.14)

These status signals indicate that the STOP cam minus p2569 or STOP cam plus p2570 has been reached or passed. The signals are reset if the cams are left in a directly opposing the approach direction.

Axis moves forwards (r2683.4)
Axis moves backwards (r2683.5)
Axis accelerates (r2684.4)
Drive decelerates (r2684.5)
Drive stationary (zero speed) (r2199.0)

These signals display the current motion status. If the actual absolute speed is less or equal to p2161, then the status signal "drive stationary" is set - otherwise it is deleted. The signals are appropriately set if jog mode, reference point approach or a traversing task is active.

Cam switching signal 1 (r2683.8)
Cam switching signal 2 (r2683.9)

The electronic cam function can be implemented using these signals. Cam switching signal 1 is 0 if the actual position is greater than p2547 - otherwise 1. Cam switching signal 2 is 0 if the actual position is greater than p2548 - otherwise 1. This means that the signal is deleted if the drive is located behind (after) the cam switching position. The position controller initiates these signals.

Direct output 1 (r2683.10)
Direct output 2 (r2683.11)

If a digital output is parameterized, the function "direct output 1" or "direct output 2", then it can be set by a corresponding command in the traversing task (SET_O) or reset (RESET_O).

Following error in tolerance (r2684.8)

When the axis is traversed, closed-loop position controlled, using a model, the permissible following error is determined from the instantaneous velocity and the selected Kv factor. Parameter p2546 defines a dynamic following error window that defines the permissible deviation from the calculated value. The status signal indicates as to whether the following error is within the window (status 1).

Target position reached (r2684.10)

The status signal "target position reached" indicates that the drive has reached its target position at the end of a traversing command. This signal is set as soon as the actual drive position is within the positioning window p2544 and is reset, if it leaves this window.

The status signal is not set, if

- Signal level 1 at binector input p2554 "signal traversing command active".
- Signal level 0 at binector input p2551 "signal setpoint static".

The status signal remains set, until

- Signal level 1 at binector input p2551 "signal setpoint static".

Reference point set (r2684.11)

The signal is set as soon as referencing has been successfully completed. It is deleted as soon as no reference is there or at the start of the reference point approach.

Acknowledgement, traversing block activated (r2684.12)

A positive edge is used to acknowledge that in the mode "traversing blocks" a new traversing task or setpoint was transferred (the same signal level as binector input p2631 activate traversing task). In the mode "direct setpoint input / MDI for setting-up/positioning" a positive edge is used to acknowledge that a new traversing task or setpoint was transferred (the same signal level as binector input p2650 "edge setpoint transfer", if the transfer type was selected using a signal edge (binector input p2649 "0" signal)).

Velocity limiting active (r2683.1)

If the actual setpoint velocity exceeds the maximum velocity p2571 - taking into account the velocity override - it is limited and the control signal is set.

7.3.7 Extended setpoint channel

Description

In the servo operating mode, the extended setpoint channel is deactivated by default. If an extended setpoint channel is required, it has to be activated.

Properties of servo mode without the "extended setpoint channel" function module

- The setpoint is directly interconnected to p1155[D] (e.g. from a higher-level control or technology controller)
- Dynamic Servo Control (DSC) only

  When using DSC, the "extended setpoint channel" is not used. This unnecessarily uses the computation time of the Control Unit and, for servo, can be de-activated.
- Deceleration ramp OFF1 via p1121[D]
- Deceleration ramp OFF3 via p1135[D]
- For PROFIdrive telegrams 2 to 103 and 999 only (free assignment)
- STW 1 bit 5 (freeze ramp-function generator), no function

7.3.7.1 Activation of the "extended setpoint channel" function module

The "extended setpoint channel" function module can be activated via the commissioning Wizard or the drive configuration (configure DDS).

You can check the current configuration in parameter r0108.8. Once you have set the configuration, you must download it to the Control Unit where it is stored in a non-volatile memory.

7.3.7.2 Description

In the extended setpoint channel, setpoints from the setpoint source are conditioned for motor control.

The setpoint for motor control can also originate from the technology controller (see "Technology controller").

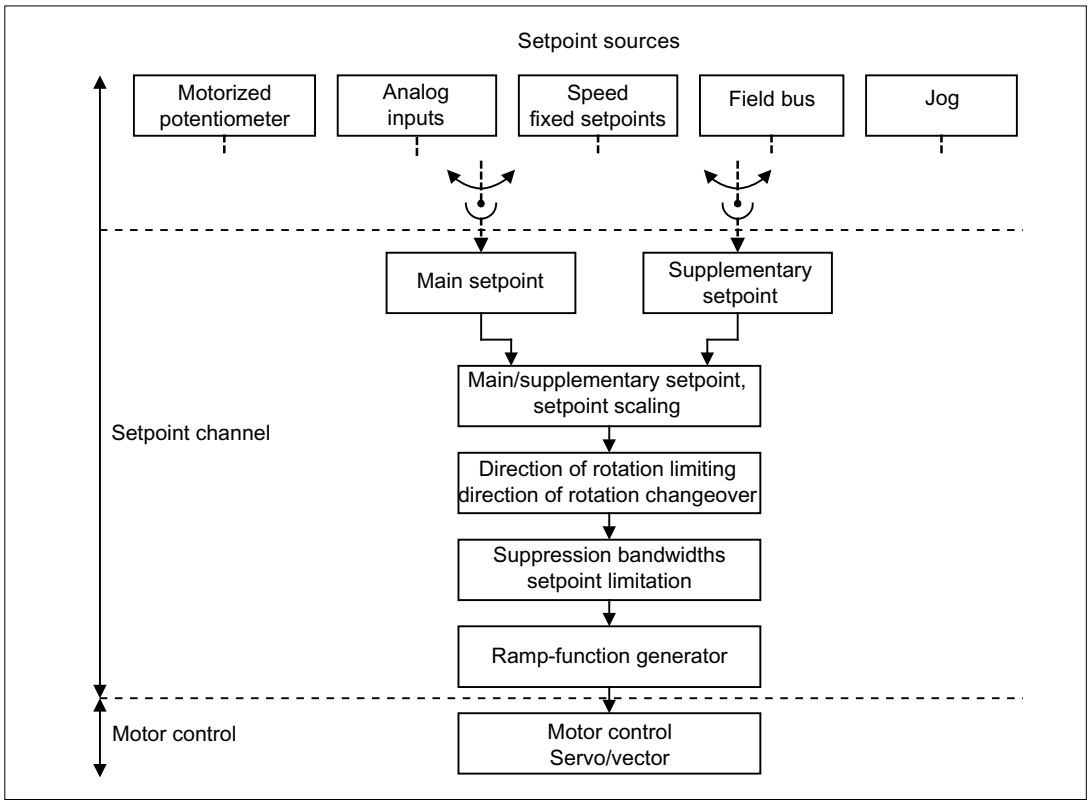

Figure 7-54 Extended setpoint channel

Properties of the extended setpoint channel

- Main/supplementary setpoint, setpoint scaling
- Direction of rotation limiting and direction of rotation changeover
- Suppression bandwidths and setpoint limitation
- Ramp-function generator

Setpoint sources

The closed-loop control setpoint can be interconnected from various sources using BICO technology (e.g. to p1070 CI: main setpoint (see function diagram 3030)).

There are various options for setpoint input:

- Fixed speed setpoints
- Motorized potentiometer

- Jog
- Field bus
  - Setpoint via PROFIBUS, for example
- About the analog input AI of the CU 305

7.3.7.3 Jog

Description

This function can be selected via digital inputs or via a field bus (e.g. PROFIBUS). The setpoint is, therefore, predefined via p1058[D] and p1059[D].

When a jog signal is present, the motor is accelerated to the jog setpoint with the acceleration ramp of the ramp-function generator (referred to the maximum speed p1082; see diagram "Function chart: jog 1 and jog 2"). After the jog signal has been deselected, the motor is decelerated via the set ramp of the ramp-function generator.

CAUTION
The "Jog" function is not PROFIdrive-compliant!

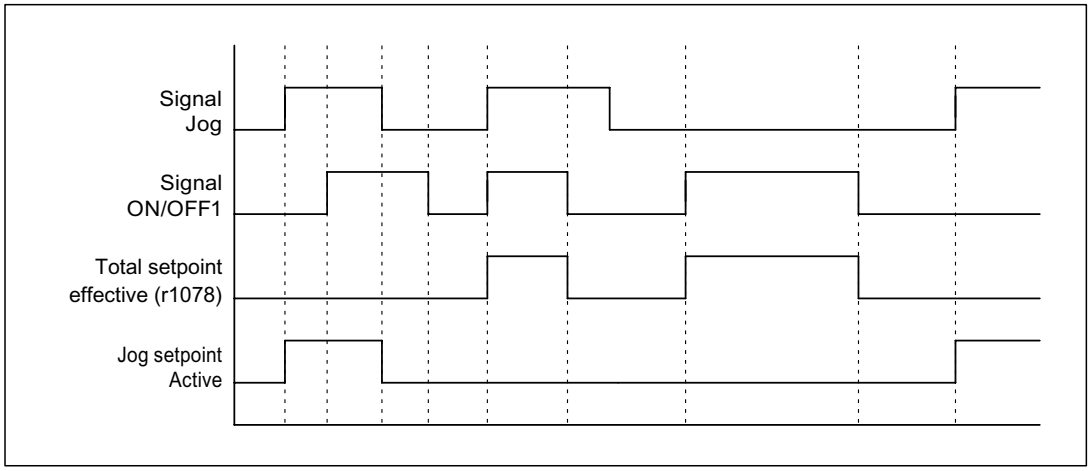

Figure 7-55 Function chart: jog and OFF1

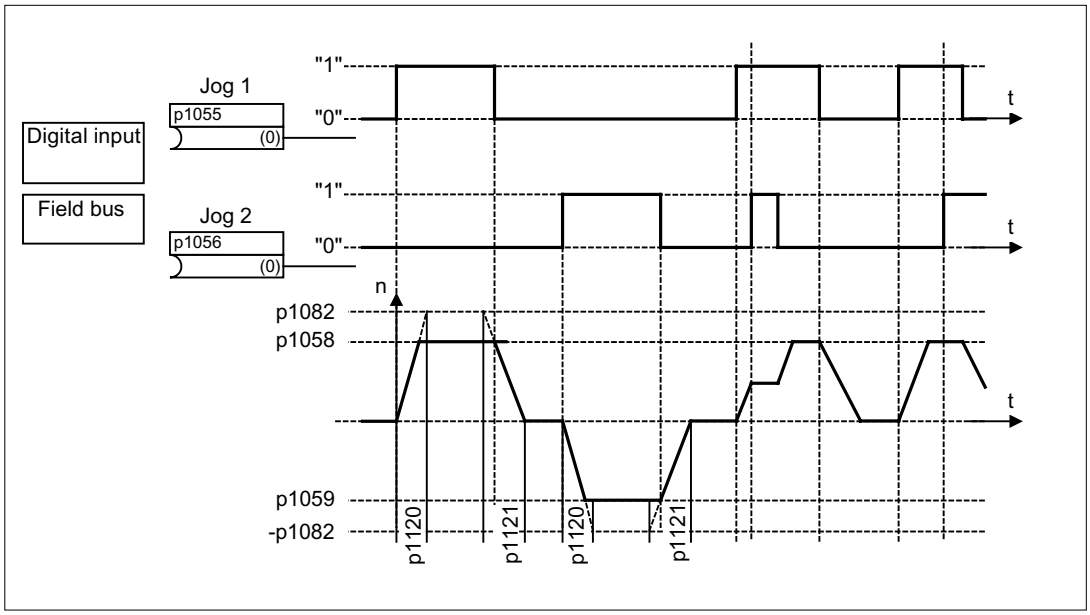

Figure 7-56 Function chart: jog 1 and jog 2

Jog properties

- If both jog signals are issued at the same time, the current speed is maintained (constant velocity phase).
- Jog setpoints are approached and exited via the ramp-function generator.
- The jog function can be activated from the "ready for switching on" status and from the OFF1 deceleration ramp.
- If ON/OFF1 = "1" and jog are selected simultaneously, ON/OFF1 has priority.
- OFF2 and OFF3 have priority over jog.
- In jog mode, the main speed setpoints (r1078) and the supplementary setpoints 1 and 2 (p1155 and p1160) are inhibited.
- The suppression bandwidths (p1091 ... p1094) and the minimum limit (p1080) in the setpoint channel are also active in jog mode.
- In jog mode, ZSWA.02 (operation enabled) is set to "0" because the speed setpoint has not been enabled for control.
- The ramp-function generator cannot be frozen (via p1141) in jog mode (r0046.31 = 1).

Jog sequence

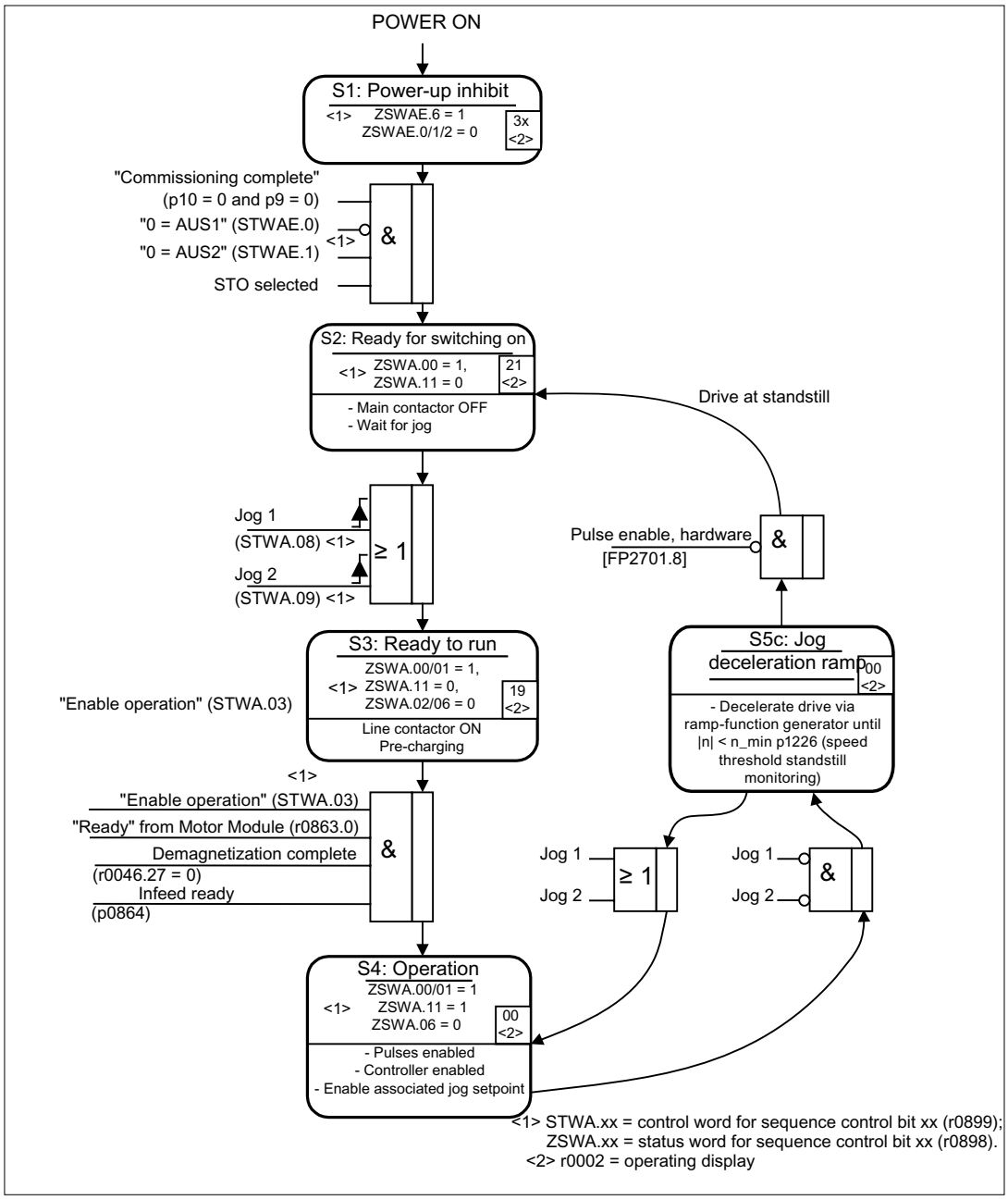

Figure 7-57 Jog sequence

Control and status messages

Table 7- 23 Jog control

Signal name	Internal control word	Binector input	PROFIdrive/Siemens telegram 1 ... 111
0 = OFF1	STWA.0	p0840 ON/OFF1	STW1.0
0 = OFF2	STWA.1	p0844 1. OFF2 p0845 2. OFF2	STW1.1
0 = OFF3	STWA.2	p0848 1. OFF3 p0849 2. OFF3	STW1.2
Enable operation	STWA.3	p0852 Enable operation	STW1.3
Jog 1	STWA.8	p1055 Jog bit 0	STW1.8
Jog 2	STWA.9	p1056 Jog bit 1	STW1.9

Table 7- 24 Jog status message

Signal name	Internal status word	Parameter	PROFIdrive/Siemens telegram 1 ... 111
Ready to start	ZSWA.0	r0899.0	ZSW1.0
Ready for operation	ZSWA.1	r0899.1	ZSW1.1
Operation enabled	ZSWA.2	r0899.2	ZSW1.2
Switching on inhibited	ZSWA.6	r0899.6	ZSW1.6
Pulses enabled	ZSWA.11	r0899.11	ZSW1.11

Function diagrams (see SINAMICS S110 List Manual)

- 2610 Sequence control - sequencer
- 3030 Setpoint addition, setpoint scaling, jog

Overview of important parameters (see SINAMICS S110 List Manual)

- p1055[C] BI: Jog bit 0
- p1056[C] BI: Jog bit 1
- p1058[D] Jog 1 speed setpoint
- p1059[D] Jog 2 speed setpoint
- p1082[D] Maximum speed
- p1120[D] Ramp-function generator ramp-up time
- p1121[D] Ramp-function generator ramp-down time

Parameterization with STARTER

The "Speed setpoint jog" parameter screen is selected with the icon in the toolbar of the STARTER commissioning tool:

7.3.7.4 Fixed speed setpoints

Description

This function can be used to specify preset speed setpoints. The fixed setpoints are defined in parameters and selected via binector inputs. Both the individual fixed setpoints and the effective fixed setpoint are available for further interconnection via a connector output (e.g. to connector input p1070 - CI: main setpoint).

Properties

- Number of fixed setpoints: Fixed setpoint 1 to 15
- Selection of fixed setpoints: Binector input bits 0 to 3
  - Binector input bits 0, 1, 2 and 3 = 0 -> setpoint = 0 active
  - Unused binector inputs have the same effect as a "0" signal

Function diagrams (see SINAMICS S110 List Manual)

- 1550 Overviews - setpoint channel
- 3010 Fixed speed setpoints

Overview of important parameters (see SINAMICS S110 List Manual)

Adjustable parameters

- p1001[D] CO: Fixed speed setpoint 1
- ...
- p1004[D] CO: Fixed speed setpoint 4
- p1020[C] BI: Fixed speed setpoint selection Bit 0
- p1021[C] BI: Fixed speed setpoint selection Bit 1

Display parameters

- r1024 CO: Fixed speed setpoint effective
- r1197 Fixed speed setpoint current number

Parameterization with STARTER

In the STARTER commissioning tool, the "Fixed setpoints" parameter screen in the project navigator under the relevant drive is activated by double-clicking Setpoint channel -> Fixed setpoints.

7.3.7.5 Motorized potentiometer

Description

This function is used to simulate an electromechanical potentiometer for setpoint input.

You can switch between manual and automatic mode for setpoint input. The specified setpoint is routed to an internal ramp-function generator. Setting values, start values and braking with OFF1 do not require the ramp-function generator of the motorized potentiometer.

The output of the ramp-function generator for the motorized potentiometer is available for further interconnection via a connector output (e.g. interconnection to connector input p1070 - CI: main setpoint, an additional ramp-function generator is then active).

Properties for manual mode (p1041 = "0")

- Separate binector inputs for Raise and Lower are used to adjust the input setpoint:
  - p1035 BI: Motorized potentiometer, setpoint, raise
  - p1036 BI: Motorized potentiometer, setpoint, lower
- Invert setpoint (p1039)
- Configurable ramp-function generator, e.g.:
  - Ramp-up/ramp-down time (p1047/p1048) referred to p1082
  - Setting value (p1043/p1044)
  - Initial rounding active/not active (p1030.2)
- Non-volatile storage via p1030.3
- Configurable setpoint for Power ON (p1030.0)
  - Starting value is the value in p1040 (p1030.0 = 0)
  - Starting value is the stored value (p1030.0 = 1)

Properties for automatic mode (p1041 = "1")

- The input setpoint is specified via a connector input (p1042).
- The motorized potentiometer acts like a "normal" ramp-function generator.
- Configurable ramp-function generator, e.g.:
  - Switch on/off (p1030.1)
  - Ramp-up/ramp-down time (p1047/p1048)
  - Setting value (p1043/p1044)
  - Initial rounding active/not active (p1030.2)
- Non-volatile storage of the setpoints via p1030.3
- Configurable setpoint for Power ON (p1030.0)
  - Starting value is the value in p1040 (p1030.0 = 0)
  - Starting value is the stored value (p1030.0 = 1)

Function diagrams (see SINAMICS S110 List Manual)

- 1550 Setpoint channel
- 2501 Control word sequence control
- 3020 Motorized potentiometer

Overview of important parameters (see SINAMICS S110 List Manual)

- p1030[D] Motorized potentiometer, configuration
- p1035[C] BI: Motorized potentiometer, setpoint, raise
- p1036[C] BI: Motorized potentiometer, setpoint, lower
- p1037[D] Motorized potentiometer, maximum speed
- p1038[D] Motorized potentiometer, minimum speed
- p1039[C] BI: Motorized potentiometer, inversion
- p1040[D] Motorized potentiometer, starting value
- p1041[C] BI: Motorized potentiometer, manual/automatic
- p1042[C] CI: Motorized potentiometer, automatic setpoint
- p1043[C] BI: Motorized potentiometer, accept setpoint
- p1044[C] CI: Motorized potentiometer, setting value
- r1045 CO: Motorized potentiometer, speed setpoint in front of the ramp-function generator
- p1047[D] Motorized potentiometer, ramp-up time
- p1048[D] Motorized potentiometer, ramp-down time
- r1050 CO: Motorized potentiometer, setpoint after the ramp-function generator
- p1082[D] Maximum speed

Parameterization with STARTER

In the STARTER commissioning tool, the "Motorized potentiometer" parameter screen in the project navigator under the relevant drive is activated by double-clicking Setpoint channel -> Motorized potentiometer.

7.3.7.6 Main/supplementary setpoint and setpoint modification

Description

The supplementary setpoint can be used to incorporate correction values from lower-level controllers. This can be easily carried out using the addition point for the main/supplementary setpoint in the setpoint channel. Both variables are imported simultaneously via two separate or one setpoint source and added in the setpoint channel.

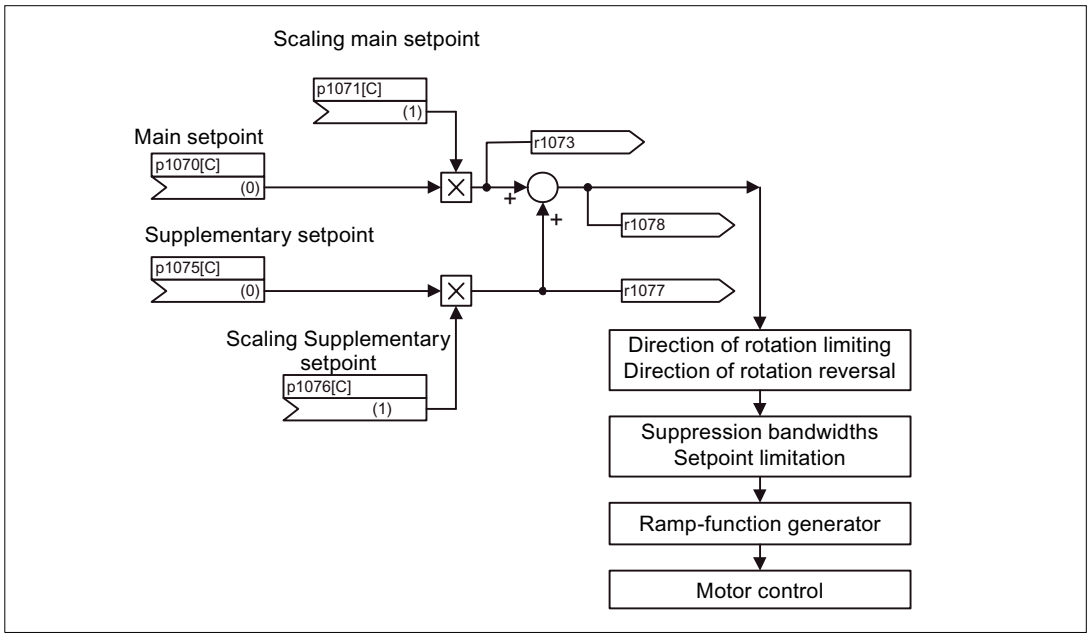

Figure 7-58 Setpoint addition, setpoint scaling

Function diagrams (see SINAMICS S110 List Manual)

- 1550 Setpoint channel
- 3030 Main/supplementary setpoint, setpoint scaling, jog

Overview of important parameters (see SINAMICS S110 List Manual)

Adjustable parameters

- p1070[C] CI: Main setpoint
- p1071[C] CI: Main setpoint scaling
- p1075[C] CI: Supplementary setpoint
- p1076[C] CI: Supplementary setpoint scaling

Display parameters

- r1073[C] CO: Main setpoint effective
- r1077[C] CO: Supplementary setpoint effective
- r1078[C] CO: Total setpoint effective

Parameterization with STARTER

The "Speed setpoint" parameter screen is selected with the icon in the toolbar of the STARTER commissioning tool:

7.3.7.7 Direction limitation and setpoint inversion

Description

A reverse operation involves a direction reversal. Selecting setpoint inversion p1113[C] can reverse the direction in the setpoint channel.

Parameter p1110[C] or p1111[C] can be set respectively to prevent input of a negative or positive setpoint via the setpoint channel. However, the following settings for minimum speed (p1080) in the setpoint channel are still operative. With the minimum speed, the motor can turn in a negative direction, although p1110 = 1 is set.

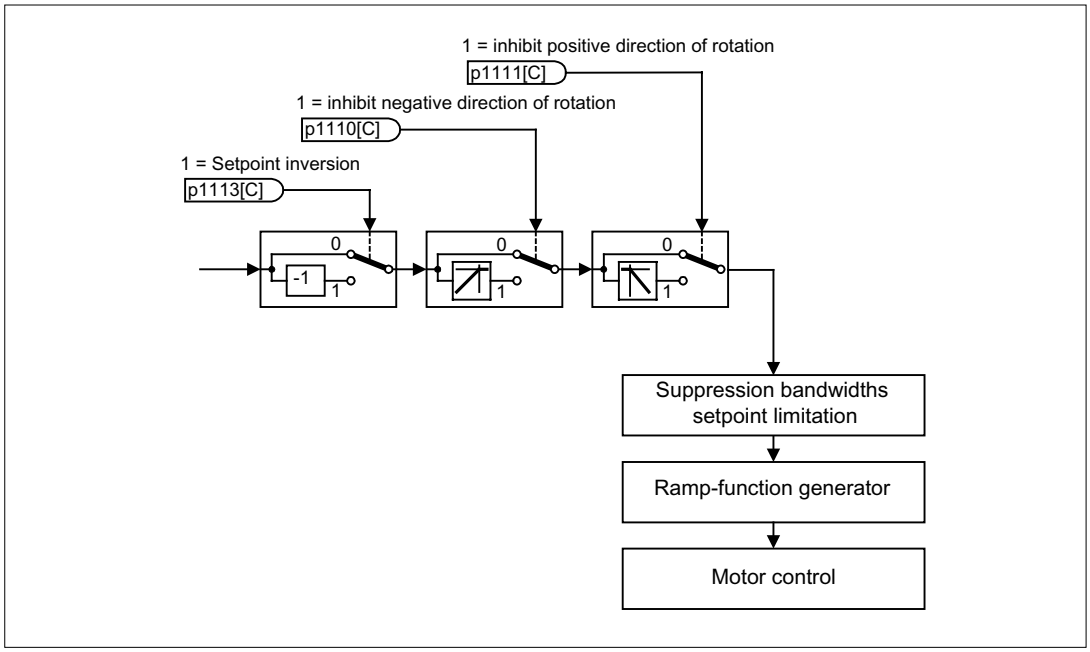

Figure 7-59 Direction of rotation limiting and direction of rotation changeover

Function diagrams (see SINAMICS S110 List Manual)

- 1550 Setpoint channel
- 3040 Direction limitation and direction reversal

Overview of important parameters (see SINAMICS S110 List Manual)

Adjustable parameters

- p1110[C] BI: Inhibit negative direction
- p1111[C] BI: Inhibit positive direction
- p1113[C] BI: Setpoint inversion

Parameterization with STARTER

The "Speed setpoint" parameter screen is selected with the icon in the toolbar of the STARTER commissioning tool:

7.3.7.8 Suppression bandwidths and setpoint limits

Description

In the range 0 U/min to setpoint speed, a drive train (e.g. motor, coupling, shaft, machine) can have one or more points of resonance, which can result in vibrations. The suppression bandwidths can be used to prevent operation in the resonance frequency range.

The limit speeds can be set via p1080[D] and p1082[D]. These limits can also be changed during operation with the connectors p1085[C] and p1088[C].

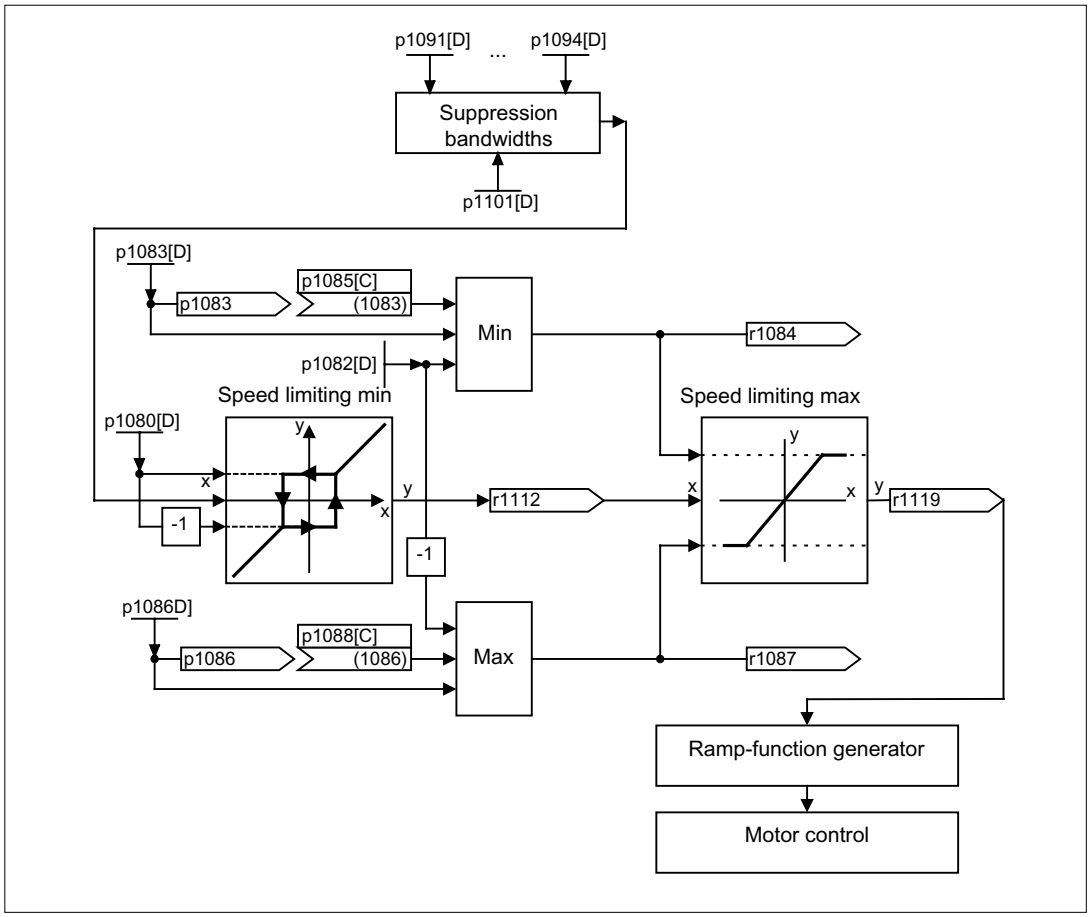

Figure 7-60 Suppression bandwidths, setpoint limitation

Function diagrams (see SINAMICS S110 List Manual)

- 1550 Setpoint channel
- 3050 Suppression bandwidth and speed limiting

Overview of important parameters (see SINAMICS S110 List Manual)

Setpoint limitation

- p1080[D] Minimum speed
- p1082[D] Maximum speed
- p1083[D] CO: Speed limit in positive direction of rotation
- r1084 Speed limit positive effective
- p1085[C] CI: Speed limit in positive direction of rotation
- p1086[D] CO: Speed limit negative direction of rotation
- r1087 Speed limit negative effective
- p1088[C] DI: Speed limit negative direction of rotation
- r1119 Ramp-function generator setpoint at the input

Suppression bandwidths

- p1091[D] Suppression speed 1
- ...
- p1094[D] Suppression speed 4
- p1101[D] Suppression speed bandwidth

Parameterization with STARTER

The "speed limitation" parameter screen is selected by activating the following icon in toolbar of the STARTER commissioning tool:

Figure 7-61 STARTER icon for "speed limitation"

7.3.7.9 Ramp-function generator

Description

The ramp-function generator is used to limit acceleration in the event of abrupt setpoint changes, which helps prevent load surges throughout the drive train. The ramp-up time p1120[D] and ramp-down time p1121[D] can be used to set mutually independent acceleration and deceleration ramps. This allows a controlled transition to be made in the event of setpoint changes.

The maximum speed p1082[D] is used as a reference value for calculating the ramps from the ramp-up and ramp-down times. A special adjustable ramp can be set via p1135 for quick stop (OFF3), e.g. for rapid controlled deceleration when an emergency OFF button is pressed.

There are two types of ramp-function generator:

- Basic ramp-function generator with
  - Acceleration and deceleration ramps
  - Ramp for quick stop (OFF3)
  - Tracking can be selected via a binector input
  - Setting values for the ramp-function generator
- Extended ramp-function generator also has
  - Initial and final rounding off

Note

The ramp-function generator cannot be frozen (via p1141) in jog mode (r0046.31 = 1).

Properties of the basic ramp-function generator

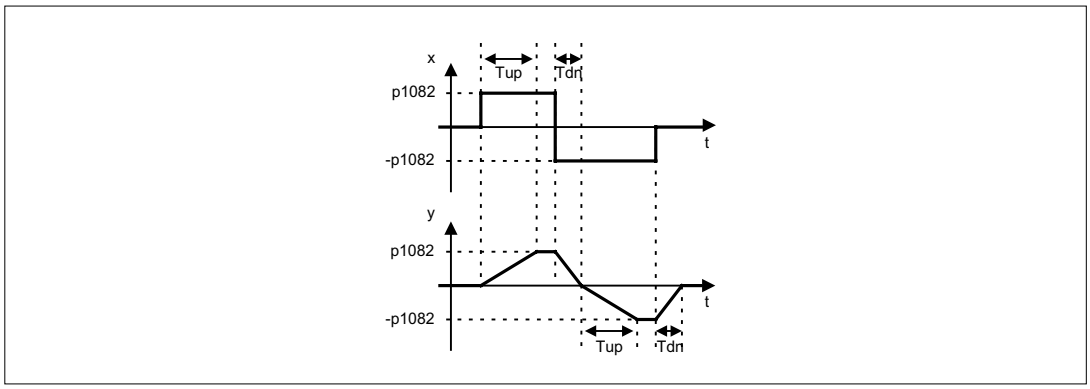

Figure 7-62 Ramp-up and ramp-down with the basic ramp-function generator

- RFG ramp-up time Tup p1120[D]
- RFG ramp-down time Tdn p1121[D]

- OFF3 deceleration ramp
  - OFF3 ramp-down time p1135[D]
- Set ramp-function generator
  - Ramp-function generator setting value p1144[C]
  - Set ramp-function generator signal p1143[C]
- Freezing of the ramp-function generator using p1141 (not in jog mode r0046.31 = 0)

Properties of the extended ramp-function generator

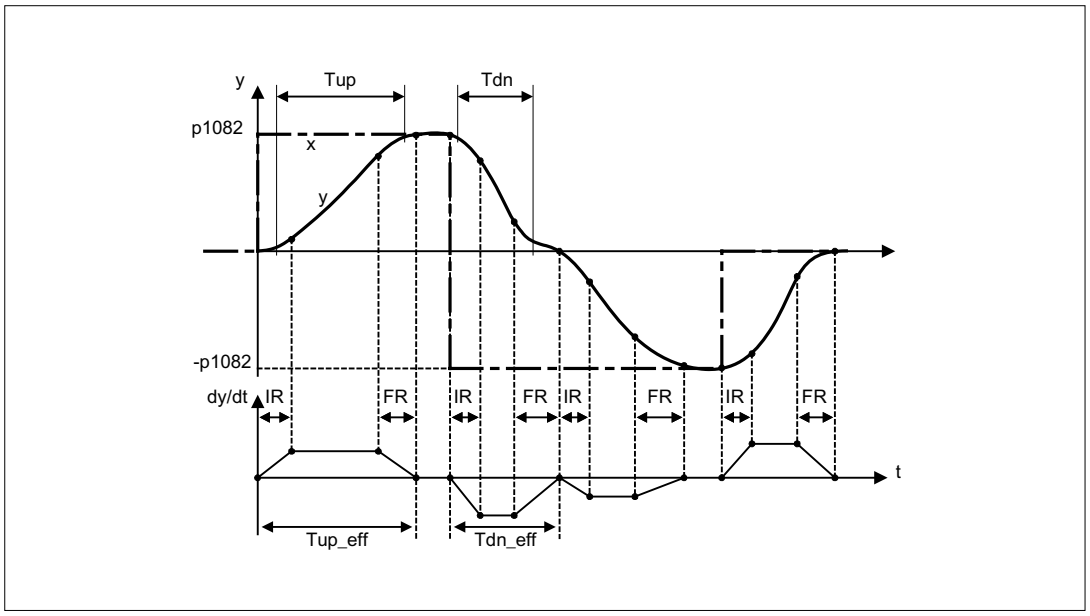

Figure 7-63 Extended ramp-function generator

- RFG ramp-up time Tup p1120[D]
- RFG ramp-down time Tdn p1121[D]
- Initial rounding IR p1130[D]
- Final rounding FR p1131[D]
- Rounding type p1134[D]
- Effective ramp-up time
  Tup_eff = Tup + (IR/2 + FR/2)
- Effective ramp-down time
  Tdn_eff = Tdn + (IR/2 + FR/2)
- OFF3 deceleration ramp
  OFF3 ramp-down time p1135[D]
  OFF3 initial rounding p1136[D]
  OFF3 final rounding p1137[D]

- Set ramp-function generator
  - Ramp-function generator setting value p1144[C]
  - Set ramp-function generator signal p1143[C]
- Select ramp-function generator rounding type p1134[D]
  - p1134 = "0": continuous smoothing rounding is always active. Overshoots may occur. If the setpoint changes, final rounding is carried out and then the direction of the new setpoint is adopted.
  - p1134 = "1": non-continuous smoothing changes immediately to the direction of the new setpoint when the setpoint is changed.
- Configure ramp-function generator, deactivate rounding at zero crossing p1151[D]
- Freezing of the ramp-function generator using p1141 (not in jog mode r0046.31 = 0)

Ramp-function generator tracking

If the drive is in the area of the torque limits, the actual speed value is removed from the speed setpoint. The ramp-function generator tracking updates the speed setpoint in line with the actual speed value and so levels the ramp. p1145 can be used to deactivate ramp-function generator tracking (p1145 = 0) or set the permissible following error (p1145 > 1). If the permissible following error is reached, then the speed setpoint at the ramp-function generator output will only be further increased in the same proportion as the actual speed value.

Ramp-function generator tracking can be activated for the basic and the extended ramp-function generators.

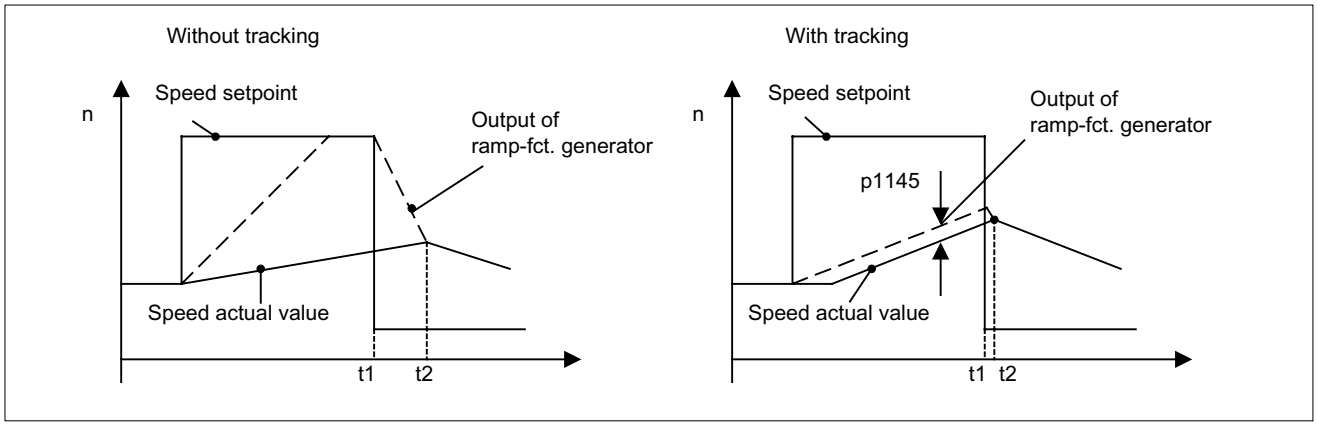

Figure 7-64 Ramp-function generator tracking

Without ramp-function generator tracking

- p1145 = 0
- Drive accelerates until t2 although setpoint < actual value

With ramp-function generator tracking

- At p1145 > 1 (values between 0 and 1 are not applicable), ramp-function generator tracking is activated when the torque limit is approached. The ramp-function generator output thereby only exceeds the actual speed value by a deviation value that can be defined in p1145.
- t1 and t2 almost identical

Function diagrams (see SINAMICS S110 List Manual)

- 1550 Setpoint channel
- 3060 Basic ramp-function generator
- 3070 Extended ramp-function generator
- 3080 Ramp-function generator selection, status word, tracking

Signal overview (see SINAMICS S110 List Manual)

- Control signal STW1.2 OFF3
- Control signal STW1.4 Enable ramp-function generator
- Control signal STW1.5 Start/stop ramp-function generator
- Control signal STW1.6 Enable setpoint
- Control signal STW2.1 Bypass ramp-function generator

Parameterization with STARTER

The "ramp-function generator" parameter screen is selected via the following icon in the toolbar of the STARTER commissioning tool:

Figure 7-65 STARTER icon for "ramp-function generator"

Overview of important parameters (see SINAMICS S110 List Manual)

Adjustable parameters

- p1115 Ramp-function generator selection
- p1120[D] Ramp-function generator ramp-up time
- p1121[D] Ramp-function generator ramp-down time
- p1122[C] BI: Bypass ramp-function generator
- p1130[D] Ramp-function generator initial rounding time
- p1131[D] Ramp-function generator final rounding time
- p1134[D] Ramp-function generator rounding type
- p1135[D] OFF3 ramp-down time
- p1136[D] OFF3 initial rounding time
- p1137[D] OFF3 final rounding time
- p1140[C] BI: Enable ramp-function generator
- p1141[C] BI: Start ramp-function generator
- p1143[C] BI: Ramp-function generator, accept setting value
- p1144[C] CI: Ramp-function generator setting value
- p1145[D] Ramp-function generator tracking
- p1148 [D] Ramp-function generator tolerance for ramp-up and ramp-down active
- p1151 [D] Ramp-function generator configuration

Display parameters

- r1119 CO: Ramp-function generator setpoint at the input
- p1149 Ramp-function generator acceleration
- r1150 CO: Ramp-function generator speed setpoint at the output

Safety Integrated Functions 8

8.1 Standards and regulations

8.1.1 General information

8.1.1.1 Aims

Manufacturers and operating companies of equipment, machines, and products are responsible for ensuring the required level of safety. This means that plants, machines, and other equipment must be designed to be as safe as possible in accordance with the current state of the art. To ensure this, companies describe in the various standards the current state of the art covering all aspects relevant to safety. When the relevant Standards are observed, this ensures that state-of-the-art technology has been utilized and, in turn, the erector/builder of a plant or a manufacturer of a machine or a piece of equipment has fulfilled his appropriate responsibility.

Safety systems are designed to minimize potential hazards for both people and the environment by means of suitable technical equipment, without restricting industrial production and the use of machines more than is necessary. The protection of man and environment must be assigned equal importance in all countries, which is it is important that rules and regulations that have been internationally harmonized are applied. This is also designed to avoid distortions in the competition due to different safety requirements in different countries.

There are different concepts and requirements in the various regions and countries of the world when it comes to ensuring the appropriate degree of safety. The legislation and the requirements of how and when proof is to be given and whether there is an adequate level of safety are just as different as the assignment of responsibilities.

The most important thing for manufacturers of machines and companies that set up plants and systems is that the legislation and regulations in the country where the machine or plant is being operated apply. For example, the control system for a machine that is to be used in the US must fulfill local US requirements even if the machinery construction company (OEM) is based in the European Economic Area (EEA).

8.1.1.2 Functional safety

Safety, from the perspective of the object to be protected, cannot be split-up. The causes of hazards and, in turn, the technical measures to avoid them can vary significantly. This is why a differentiation is made between different types of safety (e.g. by specifying the cause of possible hazards). "Functional safety" is involved if safety depends on the correct function.

To ensure the functional safety of a machine or plant, the safety-related parts of the protection and control devices must function correctly. In addition, the systems must behave in such a way that either the plant remains in a safe state or it is brought into a safe state if a fault occurs. In this case, it is necessary to use specially qualified technology that fulfills the requirements described in the associated Standards. The requirements to achieve functional safety are based on the following basic goals:

- Avoiding systematic faults
- Controlling systematic faults
- Controlling random faults or failures

Benchmarks for establishing whether or not a sufficient level of functional safety has been achieved include the probability of hazardous failures, the fault tolerance, and the quality that is to be ensured by minimizing systematic faults. This is expressed in the Standards using different terms. In IEC/EN 61508, IEC/EN 62061, IEC/EN 61800-5-2: "Safety Integrity Level" (SIL), in EN 954-1: " Categories" and EN ISO 13849-1 "Performance Level" (PL).

8.1.2 Safety of machinery in Europe

The EU Directives that apply to the implementation of products are based on Article 95 of the EU contract, which regulates the free exchange of goods. These are based on a new global concept ("new approach", "global approach"):

- EU Directives only specify general safety goals and define basic safety requirements.
- Technical details can be defined by means of standards by Standards Associations that have the appropriate mandate from the commission of the European Parliament and Council (CEN, CENELEC). These standards are harmonized in line with a specific directive and listed in the official journal of the commission of the European Parliament and Council. Legislation does not specify that certain standards have to be observed. When the harmonized Standards are observed, it can be assumed that the safety requirements and specifications of the Directives involved have been fulfilled.
- EU Directives specify that the Member States must mutually recognize domestic regulations.

The EU Directives are equal. This means that if several Directives apply for a specific piece of equipment or device, the requirements of all of the relevant Directives apply (e.g. for a machine with electrical equipment, the Machinery Directive and the Low-Voltage Directive apply).

8.1.2.1 Machinery Directive (98/37/EC)

When the European common market was launched, a decision was made that the domestic Standards and regulations of all of the EU Member States relating to the technical implementation of machines would be harmonized. This meant that, as an internal market Directive, the content of the Machinery Directive had to be implemented by the individual member states as national legislation. For the Machinery Directive, this was realized with the aim of achieving standard protective goals and, in turn, removing technical trade barriers. In accordance with the definition of a machine ("an assembly of linked parts or components, at least one of which moves"), this Directive is extremely extensive. The range of applications was subsequently expanded to include "safety-related components" and "exchangeable equipment" in the form of revision Directives.

The Machinery Directive involves the implementation of machines. It has 14 Articles and 7 Annexes. The basic safety and health requirements specified in Annex I of the Directive must be fulfilled for the safety of machines. The manufacturer must carefully observe the following principles when it comes to integrating safety (Annex I, Paragraph 1.1.2):

- "Machinery must be constructed in such a way that it can be operated, set up, and maintained as part of its proper use without endangering personnel."
  "The measures must exclude the risk of accidents."
- "When selecting the most appropriate methods, the manufacturer must apply the following principles (in the order specified):
  - Eliminate or minimize hazards (by integrating the safety concept into the development and construction of the machine);
  - Apply and use the necessary protective measures to protect against dangers that cannot be avoided;
  - Inform the user about the residual dangers due to the fact that the safety measures applied are not completely effective."

The protective goals must be implemented responsibly to ensure compliance with the Directive.

Manufacturers of a machine must verify that their machine complies with the basic requirements. This verification is facilitated by means of harmonized standards.

8.1.2.2 Harmonized European Standards

The two Standards Organizations CEN (Comité Européen de Normalisation) and CENELEC (Comité Européen de Normalisation Électrotechnique), which are mandated by the EU Commission, have elaborated harmonized European Standards in order to detail the requirements of the EU Directives for a specific product. These standards (EN standards) are published in the official journal of the commission of the European Parliament and Council and must be included without revision in domestic standards. They are designed to fulfill basic health and safety requirements as well as the protective goals specified in Annex I of the Machinery Directive.

When the harmonized standards are observed, it is "automatically assumed" that the Directive is fulfilled. As such, manufacturers can assume that they have observed the safety aspects of the Directive under the assumption that these are also covered in this standard. However, not every European Standard is harmonized in this sense. Key here is the listing in the official journal of the commission of the European Parliament and Council.

The European standards regarding the safety of machines are structured in a hierarchical manner as follows:

- A standards (basic standards)
- B standards (group standards)
- C standards (product standards)

Type A standards/basic standards

A standards include basic terminology and definitions relating to all types of machine. This includes EN ISO 12100 (previously EN 292) "Safety of Machines, Basic Terminology, General Design Principles."

A standards are aimed primarily at the bodies responsible for setting the B and C standards. The measures specified here for minimizing risk, however, may also be useful for manufacturers if no applicable C standards have been defined.

Type B standards/group standards

B standards cover all safety-related standards for various different machine types. B standards are aimed primarily at the bodies responsible for setting C standards. They can also be useful for manufacturers during the machine design and construction phases, however, if no applicable C standards have been defined.

A further sub-division has been made for B standards:

- Type B1 standards for higher-level safety aspects (e.g. ergonomic principles, safety clearances from sources of danger, minimum clearances to prevent parts of the body from being crushed).
- Type B2 standards for protective safety devices are defined for different machine types (e.g. EMERGENCY STOP devices, two-hand operating circuits, interlocking elements, contactless protective devices, safety-related parts of controls).

Type C standards/product standards

C standards are product-specific standards (e.g. for machine tools, woodworking machines, elevators, packaging machines, printing machines etc.). Product standards cover machine-specific requirements. In some cases, the requirements may differ from the basic and group standards. Type C/product standards have the highest priority for machine manufacturers who can assume that it fulfills the basic requirements of Annex I of the Machinery Directive (automatic presumption of compliance). If no product standard has been defined for a particular machine, type B standards can be applied when the machine is constructed.

A complete list of the standards specified and the mandated draft standards are available on the Internet at the following address:

http://www.newapproach.org/

Recommendation: Due to the rapid pace of technical development and the associated changes in machine concepts, the standards (and C standards in particular) should be checked to ensure that they are up to date. Where appropriate, note that the application of a particular standard may not be mandatory provided that all the safety requirements of the applicable EU directive are fulfilled.

8.1.2.3 Standards for implementing safety-related controllers

If the functional safety of a machine depends on various control functions, the controller must be implemented in such a way that the probability of the safety functions failing is sufficiently minimized. The standards EN ISO 13849-1 (previously EN 954-1) and EN 62061 define guidelines for implementing safety-related machine controllers which, when properly applied, ensure that all the safety requirements of the EC Machinery Directive are fulfilled. These standards ensure that the relevant safety requirements of the Machinery Directive are fulfilled.

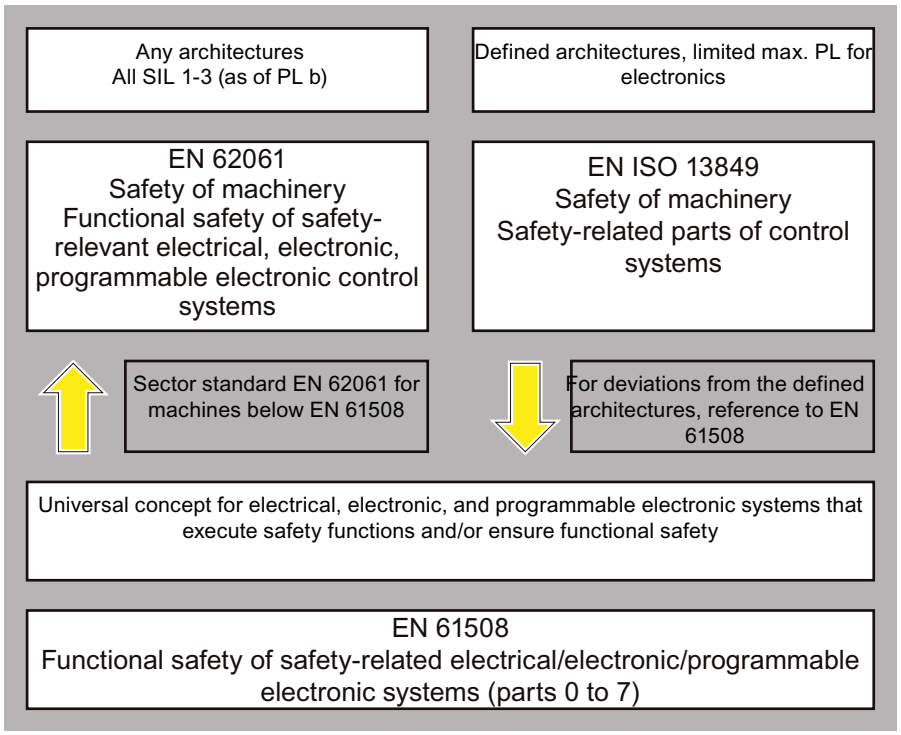

Figure 8-1 Standards for implementing safety-related controllers

The application areas of EN ISO 13849-1, EN 62061, and EN 61508 are very similar. To help users make an appropriate decision, the IEC and ISO associations have specified the application areas of both standards in a joint table in the introduction to the standards. Either EN ISO 13849-1 or EN 62061 are applied depending on the technology (mechanical, hydraulic, pneumatic, electrical, electronic, programmable electronic), risk classification, or architecture.

	Systems for executing safety-related control functions	EN ISO 13849-1	EN 62061
A	Non-electrical (e.g. hydraulic, pneumatic)	X	Not covered
B	Electromechanical (e.g. relay and/or basic electronics)	Restricted to the designated architectures (see comment 1) and max. up to PL = e	All architectures and max. up to SIL 3
C	Complex electronics (e.g. programmable electronics)	Restricted to the designated architectures (see comment 1) and max. up to PL = d	All architectures and max. up to SIL 3
D	A combined with B	Restricted to the designated architectures (see comment 1) and max. up to PL = e	X See comment 3
E	C combined with B	Restricted to the designated architectures (see comment 1) and max. up to PL = d	All architectures and max. up to SIL 3
F	C combined with A or C combined with A and B	X See comment 2	X See comment 3

"X" indicates that the point is covered by this standard.

Comment 1:
Designated architectures are described in Annex B of EN ISO 13849-1 and provide a simplified basis for the quantification.

Comment 2:
For complex electronics: Use of designated architectures in compliance with EN ISO 13849-1 to PL = d, or every architecture in compliance with EN 62061.

Comment 3:
For non-electrical systems: Use components that comply with EN ISO 13849-1 as sub-systems.

8.1.2.4 EN ISO 13849-1 (previously EN 954-1)

A qualitative analysis (to EN 954-1) is not sufficient for modern controllers due to their technology. Among other things, EN 954-1 does not take into account time behavior (e.g. test interval and/or cyclic test, lifetime). This led to in the probability-based approach of EN ISO 13849-1 (probability of failure per unit time).

EN ISO 13849-1 is based on the known categories of EN 954-1. It now also takes into account complete safety functions and all the devices required to execute these. In addition to the qualitative approach of EN 954-1, EN ISO 13849-1 now includes a quantitative analysis of the safety functions. Performance levels (PL), which are based on the categories, are used. The following safety-related characteristic quantities are required for devices/equipment:

- Category (structural requirement)
- PL: Performance level
- $MTTF_d$: Mean time to dangerous failure
- DC: Diagnostic coverage
- CCF:
  Common cause failure

The standard describes how the performance level (PL) is calculated for safety-related components of the controller on the basis of designated architectures. In the event of any deviations from this, EN ISO 13849-1 refers to EN 61508.

When combining several safety-related parts to form a complete system, the Standard explains how to determine the resulting PL.

Note

Since May 2007, EN ISO 13849-1 has been harmonized as part of the Machinery Directive. EN 954-1 will still apply until November 30, 2009.

8.1.2.5 EN 62061

EN 62061 (identical to IEC 62061) is a sector-specific standard subordinate to IEC/EN 61508. It describes the implementation of safety-related electrical machine control systems and looks at the complete lifecycle, from the conceptual phase to decommissioning. The standard is based on the quantitative and qualitative analyses of safety functions,

whereby it systematically applies a top-down approach to implementing complex control systems (known as "functional decomposition"). The safety functions derived from the risk analysis are sub-divided into sub-safety functions, which are then assigned to real devices, sub-systems, and sub-system elements. Both the hardware and software are covered. EN 62061 also describes requirements regarding the implementation of application programs.

A safety-related control systems comprises different sub-systems. From a safety perspective, the sub-systems are described by means of the characteristic quantities (SIL claim limit and PFH_D).

Programmable electronic devices (e.g. PLCs or variable-speed drives) must fulfill EN 61508. They can then be integrated in the controller as sub-systems. The following safety-related characteristic quantities must be specified by the manufacturers of these devices.

Safety-related characteristic quantities for subsystems:

- SIL CL: SIL claim limit
- PFH_D:
  Probability of dangerous failures per hour
- T1:
  Lifetime

Simple sub-systems (e.g. sensors and actuators) in electromechanical components can, in turn, comprise sub-system elements (devices) interconnected in different ways with the characteristic quantities required for determining the relevant PFH_D value of the sub-system.

Safety-related characteristic quantities for subsystem elements (devices):

- λ:
  Failure rate
- B10 value: For elements that are subject to wear
- T1:
  Lifetime

For electromechanical devices, a manufacturer specifies a failure rate λ with reference to the number of operating cycles. The failure rate per unit time and the lifetime must be determined using the switching frequency for the particular application.

Parameters for the sub-system, which comprises sub-system elements, that must be defined during the design phase:

- T2:
  Diagnostic test interval
- β:
  Susceptibility to common cause failure
- DC:
  Diagnostic coverage

The PFH_D value of the safety-related controller is determined by adding the individual PFH_D values for subsystems.

The user has the following options when setting up a safety-related controller:

- Use devices and sub-systems that already comply with EN 954-1 (or EN ISO13849-1), IEC/EN 61508, or IEC/EN 62061. The standard provides information specifying how qualified devices can be integrated when safety functions are implemented.
- Develop own subsystems.
  - Programmable, electronic systems and complex systems: Application of EN 61508 or EN 61800-5-2.
  - Simple devices and subsystems: Application of EN 62061.

EN 62061 does not include information about non-electric systems. The standard provides detailed information on implementing safety-related electrical, electronic, and programmable electronic control systems. EN 954-1 / EN ISO 13849-1 must be applied for non-electrical systems.

Note

Details of simple sub-systems that have been implemented and integrated are available as functional examples.

Note

IEC 62061 has been ratified as EN 62061 in Europe and harmonized as part of the Machinery Directive.

8.1.2.6 Series of standards EN 61508 (VDE 0803)

This series of standards describes the current state of the art.

EN 61508 is not harmonized in line with any EU directives, which means that an automatic presumption of conformity for fulfilling the protective requirements of a directive is not implied. The manufacturer of a safety-related product, however, can also use EN 61508 to fulfill basic requirements of European directives in accordance with the latest conceptual design, for example, in the following cases:

- If no harmonized standard exists for the application in question. In this case, the manufacturer can use EN 61508, although no presumption of conformity exists here.
- A harmonized European standard (e.g. EN 62061, EN 954 or EN ISO 13849, EN 60204-1) references EN 61508. This ensures that the appropriate requirements of the directives are fulfilled ("standard that is also applicable"). When manufacturers apply EN 61508 properly and responsibly in accordance with this reference, they can use the presumption of conformity of the referencing standard.

EN 61508 covers all the aspects that must be taken into account when E/E/PES systems (**e**lectrical, **e**lectronic, and **p**rogrammable **e**lectronic **S**ystem) are used in order to execute safety functions and/or to ensure the appropriate level of functional safety. Other hazards (e.g. electric shock) are, like EN 954, not part of the standard.

EN 61508 has recently been declared the "International Basic Safety Publication", which makes it a framework for other, sector-specific standards (e.g. EN 62061). As a result, this standard is now accepted worldwide, particularly in North America and in the automotive industry. Today, many regulatory bodies already stipulate it (e.g. as a basis for NRTL listing).

Another recent development with respect to EN 61508 is its system approach, which extends the technical requirements to include the entire safety installation from the sensor to the actuator, the quantification of the probability of hazardous failure due to random hardware failures, and the creation of documentation covering all phases of the safety-related lifecycle of the E/E/PES.

8.1.2.7 Risk analysis/assessment

Risks are intrinsic in machines due to their design and functionality. For this reason, the Machinery Directive requires that a risk assessment be performed for each machine and, if necessary, the level of risk reduced until the residual risk is less than the tolerable risk. To assess these risks, the following standards must be applied:

- EN ISO 12100-1 "Safety of Machinery - basic terminology, general principles for design"
- EN ISO 13849-1 (previously EN 954-1) "Safety of machinery"
- EN ISO 14121-1 (previously EN 1050, Paragraph 5) "Safety of machinery - Risk assessment"

EN ISO 12100-1 focuses on the risks to be analyzed and the design principles for minimizing risk. EN ISO 14121-1 describes the iterative process for assessing and minimizing risk to achieve the required level of safety.

The risk assessment is a procedure that allows hazards resulting from machines to be systematically investigated. Where necessary, the risk assessment is followed by a risk reduction procedure. When the procedure is repeated, this is known as an iterative process.

This can help eliminate hazards (as far as this is possible) and can act as a basis for implementing suitable protective measures. The risk assessment involves the following:

- Risk analysis
  - Determining the limits of the machine (EN ISO 12100-1, EN ISO 14121-1 Paragraph 5)
  - Identifying the hazards (EN ISO 12100-1, EN ISO 14121-1 Paragraph 6)
  - Estimating the level of risk (EN 1050 Paragraph 7)
- Risk assessment (EN ISO 14121-1 Paragraph 8)

As part of the iterative process to achieve the required level of safety, a risk assessment is carried out after the risk estimation. A decision must be made here as to whether the residual risk needs to be reduced. If the risk is to be further reduced, suitable protective measures must be selected and applied. The risk assessment must then be repeated.

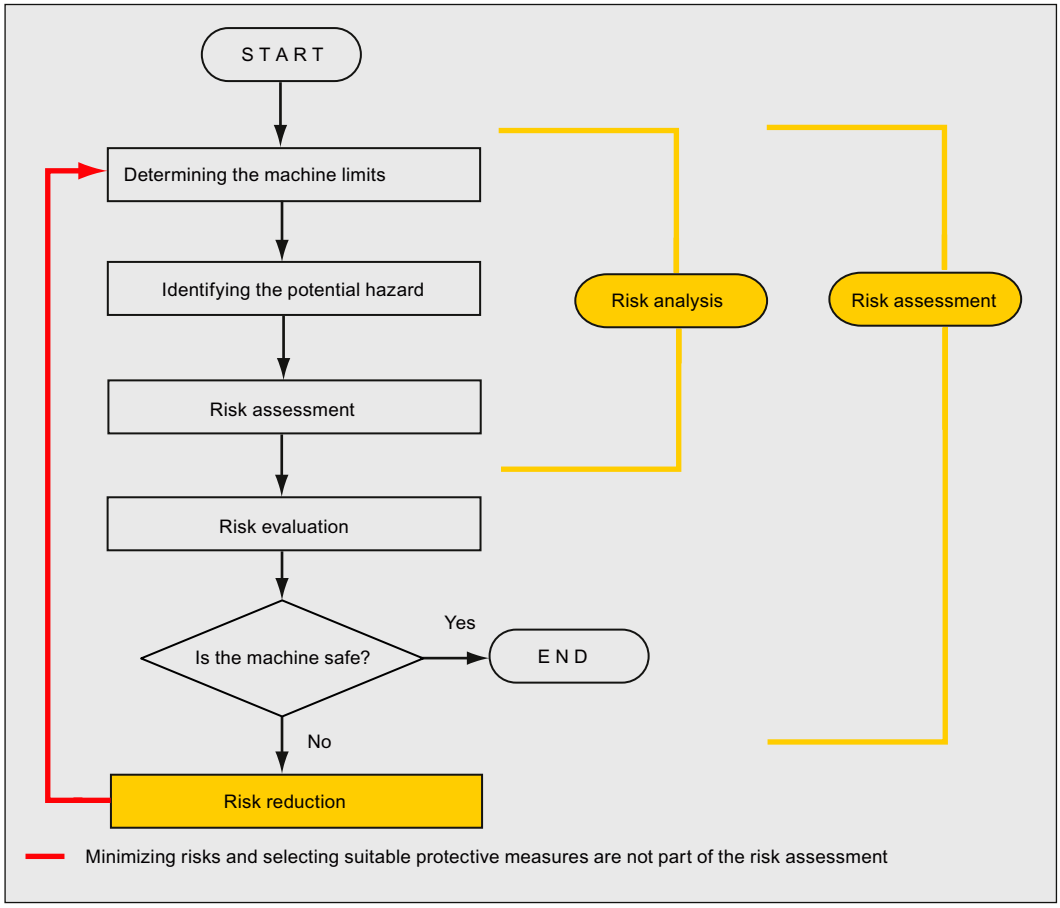

Figure 8-2 Iterative process to achieve the required level of safety to ISO 14121-1

Risks must be reduced by designing and implementing the machine accordingly (e.g. by means of controllers or protective measures suitable for the safety-related functions).

If the protective measures involve the use of interlocking or control functions, these must be designed in accordance with EN ISO 13849-1. For electrical and electronic controls, EN 62061 can be used as an alternative to EN ISO 13849-1. Electronic controls and bus systems must also comply with IEC/EN 61508.

8.1.2.8 Risk reduction

Risk reduction measures for a machine can be implemented by means of safety-related control functions in addition to structural measures. To implement these control functions, special requirements graded according to the magnitude of the risk must be taken into account. These are described in EN 954-1 or EN ISO 13849-1 (previously EN 954-1) or, in the case of electrical controllers (in particular, programmable electronics), in EN 61508 or EN 62061. The requirements regarding safety-related controller components are graded according to the magnitude of the risk and the level to which the risk needs to be reduced.

EN 954-1 defines "categories" for this purpose. Annex B describes a method of selecting the required category for designing and implementing the safety-related controller components.

EN ISO 13849-1 defines a risk graph, which can be used instead of the categories to create hierarchical performance levels (PL).

IEC/EN 62061 uses "Safety Integrity Level" (SIL) for classification purposes. This is a quantified measure of the safety-related performance of a controller. The required SIL is also determined in accordance with the risk assessment principle to ISO 14121 (EN 1050). Annex A of the standard describes a method for determining the required Safety Integrity Level (SIL).

Regardless of which standard is applied, steps must be taken to ensure that all the machine controller components required for executing the safety-related functions fulfill these requirements.

8.1.2.9 Residual risk

In today's technologically advanced world, the concept of safety is relative. In practice, the ability to ensure safety to the extent that risk is permanently excluded – "zero-risk guarantee" – is impossible. The residual risk is the risk that remains once all the relevant protective measures have been implemented in accordance with the latest state of the art.

Machine/plant documentation must always refer to the residual risk (user information to EN ISO 12100-2).

8.1.3 Machine safety in the USA

A key difference in the legal requirements regarding safety at work between the USA and Europe is that, in the USA, no legislation exists regarding machinery safety that is applicable in all of the states and that defines the responsibility of the manufacturers/supplier. A general requirement exists stating that employers must ensure a safe workplace.

8.1.3.1 Minimum requirements of the OSHA

The Occupational Safety and Health Act (OSHA) from 1970 regulates the requirement that employers must offer a safe place of work. The core requirements of OSHA are specified in Section 5 "Duties".

The requirements of the OSH Act are managed by the Occupational Safety and Health Administration (also known as OSHA). OSHA employs regional inspectors who check whether or not workplaces comply with the applicable regulations.

The OSHA regulations are described in OSHA 29 CFR 1910.xxx ("OSHA Regulations (29 CFR) PART 1910 Occupational Safety and Health"). (CFR: Code of Federal Regulations.)

http://www.osha.gov

The application of standards is regulated in 29 CFR 1910.5 "Applicability of standards". The concept is similar to that used in Europe. Product-specific standards have priority over general standards insofar as they cover the relevant aspects. Once the standards are fulfilled, employers can assume that they have fulfilled the core requirements of the OSH Act with respect to the aspects covered by the standards.

In conjunction with certain applications, OSHA requires that all electrical equipment and devices that are used to protect workers be authorized by an OSHA-certified, Nationally Recognized Testing Laboratory (NRTL) for the specific application.

In addition to the OSHA regulations, the current standards defined by organizations such as NFPA and ANSI must be carefully observed and the extensive product liability legislation that exists in the US taken into account. Due to the product liability legislation, it is in the interests of manufacturing and operating companies that they carefully maintain the applicable regulations and are "forced" to fulfill the requirement to use state-of-the-art technology.

Third-party insurance companies generally demand that their customers fulfill the applicable standards of the standards organizations. Self-insured companies are not initially subject to this requirement but, in the event of an accident, they must provide verification that they have applied generally-recognized safety principles.

8.1.3.2 NRTL listing

To protect employees, all electrical equipment used in the USA must be certified for the planned application by a "Nationally Recognized Testing Laboratory" (NRTL) certified by the OSHA. NRTLs are authorized to certify equipment and material by means of listing, labeling, or similar. Domestic standards (e.g. NFPA 79) and international standards (e.g. IEC/EN 61508 for E/E/PES systems) are the basis for testing.

8.1.3.3 NFPA 79

NFPA 79 (Electrical Standard for Industrial Machinery) applies to the electrical equipment of industrial machines with rated voltages of less than 600 V (a group of machines that operate with one another in a coordinated fashion is also considered to be a machine).

NFPA 79 contains basic requirements for programmable electronics and communications buses that specify that these devices must be listed if they are used for executing safety-relevant functions. The devices must be listed. When these requirements are fulfilled, electronic controllers and communications buses can also be used for EMERGENCY STOP functions in stop categories 0 and 1 (see NFPA 79 9.2.5.4.1.4).

Like EN 60204-1, NFPA 79 no longer specifies that the electrical energy must be disconnected by electromechanical means for EMERGENCY STOP functions.

The core requirements regarding programmable electronics and communication buses are: system requirements (see NFPA 79 9.4.3)

1. Control systems that contain software-based controllers must:
   - In the event of a single fault
     (a) cause the system to switch to a safe shutdown mode
     (b) prevent the system from restarting until the fault has been rectified
     (c) prevent an unexpected restart
   - Offer the same level of protection as hard-wired controllers
   - Be implemented in accordance with a recognized standard that defines the requirements for such systems.
2. The following suitable standards IEC 61508, IEC 62061, ISO 13849-1/-2, and IEC 61800-5-2 are specified in a note.

Underwriter Laboratories (UL) has defined a special Category for "Programmable Safety Controllers" for implementing this requirement (code NRGF). This category covers control devices that contain software and are designed for use in safety-related functions.

A precise description of the category and a list of devices that fulfill this requirement can be found on the Internet at the following address:

http://www.ul.com --> certifications directory --> UL Category code/ Guide information --> search for category "NRGF"

TUV Rheinland of North America, Inc. is also an NRTL for these applications.

8.1.3.4 ANSI B11

ANSI B11 standards are joint standards that were developed by various committees, such as the Association for Manufacturing Technology (AMT), and the Robotic Industries Association (RIA).

The hazards of a machine are evaluated by means of a risk analysis/assessment. Risk analysis is an important requirement in accordance with NFPA79, ANSI/RIA 15.06, ANSI B11.TR-3 and SEMI S10 (semiconductors). The documented findings of a risk analysis can be used to select a suitable safety system based on the safety class of the application in question.

8.1.4 Machine safety in Japan

The situation in Japan is different from that in Europe and the US. Legislation such as that prescribed in Europe does not exist. Similarly, product liability does not play such an important role as it does in the USA.

Instead of legal requirements to apply standards have been defined, an administrative recommendation to apply JIS (Japanese Industrial Standard) is in place: Japan bases its approach on the European concept and uses basic standards as national standards (see table).

Table 8- 1 Japanese standards

ISO/IEC number	JIS number	Comments
ISO12100-1	JIS B 9700-1	Earlier designation TR B 0008
ISO12100-2	JIS B 9700-2	Earlier designation TR B 0009
ISO14121- 1 / EN1050	JIS B 9702	
ISO13849-1	JIS B 9705-1	
ISO13849-2	JIS B 9705-1	
IEC60204-1	JIS B 9960-1	Without annex F or route map of the European foreword
IEC61508-0 to -7	JIS C 0508	
IEC 62061		JIS number not yet assigned

8.1.5 Equipment regulations

In addition to the requirements of the guidelines and standards, company-specific requirements must be taken into account. Large corporations in particular (e.g. automobile manufacturers) make stringent demands regarding automation components, which are often listed in their own equipment specifications.

Safety-related issues (e.g. operating modes, operator actions with access to hazardous areas, EMERGENCY STOP concepts, etc.) should be clarified with customers early on so that they can be integrated in the risk assessment/risk reduction process.

8.1.6 Other safety-related issues

8.1.6.1 Information sheets issued by the Employer's Liability Insurance Association

Safety-related measures to be implemented cannot always be derived from directives, standards, or regulations. In this case, supplementary information and explanations are required.

Some regulatory bodies issue publications on an extremely wide range of subjects.

Information sheets covering the following areas are available, for example:

- Process monitoring in production environments
- Axes subject to gravitational force
- Roller pressing machines
- Lathes and turning centers - purchasing/selling

These information sheets issued by specialist committees can be obtained by all interested parties (e.g. to provide support in factories, or when regulations or safety-related measures for plants and machines are defined). They provide support in machinery construction, production systems, and steel construction.

The information sheets can be downloaded from the following Internet address:

http://www.bgmetallsued.de/downloads

Select the category of specialist information sheet you require.

8.1.6.2 Additional references

- Safety Integrated: The Safety System for Industry (5th Edition and supplement), order no. 6ZB5 000-0AA01-0BA1
- Safety Integrated - Terms and Standards - Machine Safety Terminology (Edition 04/2007), order no. E86060-T1813-A101-A1

8.2 General information about SINAMICS Safety Integrated

8.2.1 Supported functions

The functions mentioned here comply with IEC 61508, performance level d (PL d) to ISO 13849-1 (formerly EN 954-1), and IEC 61800-5-2.

The following Safety Integrated (SI) functions are available:

- Safety Integrated Basic Functions

  These functions are part of the standard scope of the drive.

  – Safe Torque Off (STO)

    STO is a safety function that prevents the drive from restarting unexpectedly, in accordance with EN 60204-1:2006 Section 5.4.

  – Safe Stop 1 (SS1, time controlled)

    Safe Stop 1 is based on the "Safe Torque Off" function. This means that a Category 1 stop in accordance with EN 60204-1:2006 can be implemented.

  – Safe Brake Control (SBC)

    The SBC function permits the safe control of a holding brake.

    A Safe Brake Relay is needed in addition for these functions.

- Safety Integrated Extended Functions (including the Basic Functions)

  Note

  When a drive object for which Safety Integrated Extended Functions are enabled is switched to "Park" mode, the Safety Integrated software responds by selecting STO without generating a separate message.

  – Safe Stop 1 (SS1, time and acceleration controlled)

    The SS1 function is based on the “Safe Torque Off” function. This means that a Category 1 stop in accordance with EN 60204-1:2006 can be implemented.

  – Safe Stop 2 (SS2)

    The SS2 function brakes the motor safely with a subsequent transition to "Safe Operating Stop" (SOS).

  – Safe Operating Stop (SOS)

    "Safe Operating Stop" (SOS) protects against unintentional movements. The drive is in closed-loop control mode and is not disconnected from the power supply.

  – Safely Limited Speed (SLS)

    The "Safely Limited Speed" (SLS) protects against excessively high drive speeds.

  – Safe Speed Monitor (SSM)

    The SSM function reliably monitors the speed limit and issues a safe output signal, but without a response function.

Prerequisites for the Extended Functions

- Special license for Extended Functions
  Unlike the Basic Functions, a special license is required for Safety Integrated Extended Functions. The associated license key is entered in parameter p9920 in ASCII code. The license key can be activated via parameter p9921=1. For information on how to generate the license key for the product "SINAMICS Safety Integrated Extended Functions", read the section "Licensing". An insufficient license is indicated via the following alarm and LED:
  - A13000 --> License not sufficient
  - LED READY --> Flashes greed/red at 0.5 Hz
- Activation via PROFIsafe or safe on-board terminals

NOTICE
Per single Control Unit, either control via PROFIsafe or the safe on-board terminals is permitted. Mixed operation is not permitted.

- Safe actual value acquisition (see chapter "Safe actual value acquisition")
- An activated speed controller in the drive
- Overview of hardware components that support the Extended Functions:
  - CU305 Control Unit
  - Power Modules blocksize PM340
  - Sensor Modules SMC20, SME20/25
  - Motors with DRIVE-CLiQ interface (not with resolver encoder)
  - Safe Brake Relay (SBM)

8.2.2 Parameter, Checksum, Version, Password

Properties of Safety Integrated parameters

The following applies to Safety Integrated parameters:

- They are kept separate for each monitoring channel.
- During startup, checksum calculations (Cyclic Redundancy Check, CRC) are performed on the safety parameter data and checked. The display parameters are not contained in the CRC.
- Data storage: The parameters will be saved in the non-volatile memory.

- Factory settings for safety parameters

  A reset of the safety parameters to the factory setting on a drive-specific basis using p0970 or p3900 and p0010 = 30 is only possible when the safety functions are not enabled (p9301 = p9501 = p9601 = p9801 = 0).

  A complete reset of all parameters to the factory settings (p0976 = 1 and p0009 = 30 on the Control Unit) is possible even when the safety functions are enabled (p9301 = p9501 = p9601 = p9801 ≠ 0).

- They are password-protected against accidental or unauthorized changes.

NOTICE
The following safety parameters are not protected by the safety password: • p9370 SI Motion acceptance test mode (Power Module) • p9570 SI Motion acceptance test mode (Control Unit) • p9533 SI Motion SLS Setpoint speed limitation • p9705 BI: SI Motion Test stop signal source

Checking the checksum

For each monitoring channel, the safety parameters include one parameter for the actual checksum for the safety parameters that have undergone a checksum check.

During commissioning, the actual checksum must be transferred to the corresponding parameter for the reference checksum. This can be done for all checksums of a drive object at the same time with parameter p9701.

Basic Functions

- r9798 SI actual checksum SI parameters (Control Unit)
- p9799 SI reference checksum SI parameters (Control Unit)
- r9898 SI actual checksum SI parameters (Power Module)
- p9899 SI reference checksum SI parameters (Power Module)

Extended Functions

- r9398[0...1] SI Motion actual checksum SI parameters (Power Module)
- r9399[0...1] SI Motion reference checksum SI parameters (Power Module)
- r9728[0...1] SI Motion actual checksum SI parameters
- p9729[0...1] SI Motion reference checksum SI parameters

During each ramp-up procedure, the actual checksum is calculated via the safety parameters and then compared with the reference checksum.

If the actual and reference checksums are different, fault F01650/F30650 or F01680/F30680 is output and an acceptance test requested.

Safety Integrated versions

The safety firmware on the Control Unit has a different version ID to that on the Sensor Module.

For the Basic Functions:

- r9770 SI version, drive-autonomous safety functions (Control Unit)

For the Extended Functions:

- r9590 SI Motion Version safe movement monitoring (Control Unit)
- r9890 SI version (Sensor Module)

Note

For detailed requirements regarding Safety Integrated firmware, see "Safety Integrated firmware versions".

Password

The safety password protects the safety parameters against unintentional or unauthorized access.

In commissioning mode for Safety Integrated (p0010 = 95), you cannot change safety parameters until you have entered the valid safety password in p9761 for the drive.

- When Safety Integrated is commissioned for the first time, the following applies:
  - Safety passwords = 0
  - Default setting for p9761 = 0

  In other words:
  The safety password does not need to be set during first commissioning.
- In the case of a series commissioning of Safety or in the case of spare part installation, the following applies:
  - The safety password is retained on the memory card and in the STARTER project.
  - No safety password is required in the case of spare part installation.
- Change password for the drive
  - p0010 = 95 Commissioning mode
  - p9761 = Enter "old safety password".
  - p9762 = Enter "new password".
  - p9763 = Confirm "new password".
  - The new and confirmed safety password is valid immediately.

If you need to change safety parameters but you do not know the safety password, proceed as follows:

1. Resetting the drive unit to factory settings.
2. Recommission the drive unit and drive.
3. Recommission Safety Integrated.

Or contact your regional Siemens office and ask for the password to be deleted (complete drive project must be made available).

Overview of important parameters for "Password" (see SINAMICS S110 List Manual)

- p9761 SI password input
- p9762 SI password new
- p9763 SI password acknowledgment

8.3 System features

8.3.1 Certification

The safety functions of the SINAMICS S drive system meet the following requirements:

- Category 3 to EN 954-1/ISO 13849-1
- Performance Level (PL) d to EN ISO 13849-1
- Safety integrity level 2 (SIL 2) to IEC 61508

In addition, most of the safety functions of the SINAMICS S have been certified by independent institutes. An up-to-date list of certified components is available on request from your local Siemens office.

8.3.2 Safety instructions

Note

Additional safety information and residual risks not specified in this section are included in the relevant sections of this Function Manual.

⚠ DANGER

Safety Integrated can be used to minimize the level of risk associated with machines and plants.
Machines and plants can only be operated safely in conjunction with Safety Integrated, however, when the machine manufacturer

- is familiar with and observes every aspect of this technical user documentation, including the documented general conditions, safety information, and residual risks.
- Carefully constructs and configures the machine/plant. A careful and thorough acceptance test must then be performed by qualified personnel and the results documented.
- Implements and validates all the measures required in accordance with the machine/plant risk analysis by means of the programmed and configured Safety Integrated functions or by other means.

It should be noted that Safety Integrated does not replace the machine/plant risk assessment carried out by the machine manufacturer as required by the EG Machinery Directive.
In addition to Safety Integrated, further risk reduction measures must be implemented.

⚠ WARNING

The Safety Integrated functions cannot be activated until the startup is completed. System startup is a critical operating state with increased risk. No personnel may be present in the immediate danger zone in this phase.

The drives of vertical axes must be in torque state.

A complete forced dormant error detection cycle is required after power on (see chapter "Forced dormant error detection").

⚠ WARNING

EN 60204-1:2006
The EMERGENCY STOP function must be used to bring the machine to a standstill in accordance with stop category 0 or 1 (STO or SS1).
The machine must not restart automatically after EMERGENCY STOP.
When the safety functions (Basic and Extended functions) are deactivated, an automatic restart is permitted under certain circumstances depending on the risk analysis (except when EMERGENCY STOP is reset). An automatic start is permitted when a protective door is closed, for example.

⚠ WARNING

After hardware and/or software components have been modified or replaced, all protective equipment must be closed prior to system startup and drive activation. Personnel shall not be present within the danger zone.

It may be necessary to carry out a partial or complete acceptance test (see chapter "Acceptance test") after having made certain changes or replacements.

Before allowing anybody to re-enter the danger zone, you should test steady control response by briefly moving the drives in forward and reverse direction (+/–).

To observe during power on:

The safety functions can only be activated once system has booted up.

⚠ WARNING

- Encoder faults within a single-encoder system are detected by means of various HW and SW monitoring functions. It is not allowed to disable these monitoring functions and they must be parameterized carefully. Depending on the fault type and responding monitoring function, stop function category 0 or 1 to EN 60204-1:2006 (fault response functions STOP A or STOP B to Safety Integrated) is activated.
- Stop function category 0 to EN 60204-1:2006 (STO or STOP A to Safety Integrated) means that the drives are not decelerate but instead coast to a standstill (the time required to coast to standstill depends on the kinetic energy). This must be included in the logic of the protective door lock, for example, by means of logic operation of SSM (n<nx).
- Safety Integrated is not capable of detecting parameterization errors made by the machine manufacturer. The required safety level can only be reached by by means of an elaborate acceptance test.
- Power Modules or the motor must be replaced with a device of the same type, as the parameter settings will otherwise lead to an incorrect Safety Integrated response. The corresponding drive must be re-commissioned after an encoder was replaced.

⚠ WARNING

If an internal or external fault occurs, none or only some of the parameterized safety functions are available during the STOP-F response triggered by the fault. This must be taken into account when a delay time between STOP F and STOP B is parameterized. This applies in particular to vertical axes.

8.3.3 Probability of failure of the safety functions (PFH value)

Probability of failure

The probabilities of safety function failure must be specified in the form of a PHF value (Probability of Failure per Hour) to IEC 61508, IEC 62061 and ISO 13849-1. The PFH value of a safety function depends on the safety concept of the drive unit and its hardware configuration, as well as on the PFH values of other components used for this safety function.

Corresponding PFH values are provided for the SINAMICS S110 drive unit, depending on the hardware configuration (control type, ...). The various integrated safety functions are not differentiated.

The PHF values can be requested from your local sales office.

8.3.4 Response times

Control signals by way of terminals on the Control Unit and Power Module.

Table 8- 2 Response times with control signals by way of terminals on the Control Unit and Power Module.

Function	Standard	Worst case
STO	2 x r9780 + 4 ms	4 x r9780 + 4 ms
SBC	4 x r9780 + 4 ms	8 x r9780 + 4 ms
SS1 (time controlled) Call (until braking is initiated)	 2 x r9780 + 4 ms + 2 ms	 4 x r9780 + 4 ms + 2 ms

Control by way of PROFIsafe

Table 8- 3 Response times with control by way of PROFIsafe

Function	Standard	Worst case
STO	4 x p9500 + r9780	4 x p9500 + 3 x r9780
SBC	4 x p9500 + 2 x r9780	4 x p9500 + 6 x r9780
SS1 (time and acceleration controlled), SS2 Call Speed limit violated	 4 x p9500 + 2 ms 2 x p9500 + 2 ms	 5 x p9500 + 2 ms 2.5 x p9500 + r9780 + p9511
SOS position tolerance violated	1.5 x p9500 + 2 ms	3 x p9500 + p9511+ 2 ms
SLS speed limit violated [1)]	2 x p9500 + 2 ms	3.5 x p9500 + p9511+ 2 ms
SSM	4 x p9500	4.5 x p9500 + p9511

Activation via safe on-board terminals

Table 8- 4 Reaction times for activation via safe on-board terminals

Function	Standard	Worst case
STO	2.5 x p9500 + r9780 + 1.5 ms	3 x p9500 + 3 x r9780 + 2 ms
SBC	2.5 x p9500 + 2 x r9780 + 1 ms	3 x p9500 + 6 x r9780 + 2 ms
SS1 (time and acceleration controlled), SS2 Call Speed limit violated	 2.5 x p9500 + 3 ms 2 x p9500 + 2 ms	 4 x p9500 + 4 ms 2.5 x p9500 + r9780 + p9511
SOS position tolerance violated	1.5 x p9500 + 2 ms	3 x p9500 + p9511+ 2 ms
SLS speed limit violated [1)]	2 x p9500 + 2 ms	3.5 x p9500 + p9511+ 2 ms
SSM	3 x p9500	3.5 x p9500 + p9511

Information on the tables:

[1)] SLS: Specification of the response time required for initiation of a braking reaction in the drive, or for the output of the "SOS selected" message to the motion control system.

8.3.5 Residual risk

The fault analysis enables the machine manufacturer to determine the residual risk at his machine with regard to the drive unit. The following residual risks are known:

⚠ WARNING

Due to the intrinsic potential of hardware faults, electrical systems are subject to additional residual risk, which can be expressed by means of the PFH value.

⚠ WARNING

- Faults in the absolute track (C-D track), cyclic interchange of the drive phases (V-W-U instead of U-V-W) and reversal of the control direction may cause acceleration of the drive. Due to the fault, however, category 1 and 2 stop functions (to EN 60204-1:2006 (fault response functions stop B to D in accordance with Safety Integrated)) are not activated.
  Stop function category 0 (to EN 60204-1:2006 (fault response function stop A to Safety Integrated)) is not triggered until after the transition or delay time set in the parameter has elapsed. These faults are detected when SBR is selected (fault reaction functions STOP B/C) and stop function category 0 to EN 60204-1:2006 (fault reaction function STOP A in accordance with Safety Integrated) is triggered as early as possible regardless of this delay. Electrical faults (defective components or similar) may also lead to the response stated above.
- Simultaneous failure of two power transistors (one in the upper and the other offset in the lower inverter bridge) in the inverter may cause brief movement of the drive, depending on the number of poles of the motor.
  Maximum value of this movement:

  Synchronous rotary motors: Max. movement = 180° / no. of pole pairs

⚠ WARNING

- Violation of limits may briefly lead to a speed higher than the speed setpoint, or the axis may pass the defined position to a certain extent, depending on the dynamic response of the drive and on parameter settings.
- Mechanical forces greater than the maximum drive torque may force a drive currently operated in position control mode out of Safe Operating Stop state (SOS) and trigger stop function category 1 to EN 60204-1:2006 (fault reaction function STOP B).

⚠ WARNING

Within a single-encoder system:

a) a single electrical fault in the encoder

(or loose encoder shaft coupling), or a loose encoder housing
will cause a static state of the encoder signals (that is, they no longer follow a movement while still returning a correct level), and prevent fault detection while the drive is in stop state (for example, drive in SOS state).

Generally, the drive is held by the active closed-loop control. Under the aspect of closed-loop control it is conceivable that particularly vertical (suspended) drives move downward and that this movement is not detected.

The risk of an electrical fault in the encoder as described under a) is only given for few encoder types with specific function principle (for example, encoders with microprocessor controlled signal generation such as the Heidenheim EQI, Hübner HEAG 159/160, or AMO measuring systems with sin/cos signals).
The risk analysis of the machine manufacturer must include all of the faults described above. Additional safety measures have to be taken at suspended/vertical drives or for handling dragging loads in order to exclude faults as described in a). For example:

- Use of an encoder with analog signal generation

In order to exclude the fault described in b), for example:

- An FMEA regarding encoder shaft breakage (or slip of the encoder shaft coupling), and a solution to prevent loose encoder housings, integration of a fault exclusion process to CDV IEC 61800-5-2

8.4 Basic Functions

8.4.1 Safe Torque Off (STO)

General description

In conjunction with a machine function or in the event of a fault, the "Safe Torque Off" (STO) function is used to safely disconnect the torque-generating motor power supply.

When the function is selected, the drive unit is in a "safe status". The switching on inhibited function prevents the drive unit from being restarted.

The two-channel pulse suppression integrated in the Power Modules is the basis for this function.

Functional features of "Safe Torque Off"

- This function is integrated in the drive; this means that a higher-level controller is not required.
- The function is drive specific, that is, it must be commissioned individually on a drive-by-drive basis.
- The function must be enabled via parameter.
- When the "Safe Torque Off" function is selected:
  - The motor cannot be started accidentally.
  - The pulse suppression safely disconnects the torque-generating motor power supply.
  - The power unit and motor are not electrically isolated.

> ⚠ WARNING
>
> Appropriate measures must be taken to ensure that the motor does not move once the motor power supply has been disconnected ("coast down") (e.g. enable the "Safe Brake Control" function with a vertical axis).

> ⚠ CAUTION
>
> If two power transistors in the power unit (one in the upper and one offset in the lower inverter bridge) break down at the same time, this can cause a limited momentary movement.
>
> The maximum movement for synchronous rotary motors can be = 180 ° / pole pair number

- The status of the "Safe Torque Off" function is displayed using parameters.

Enabling the "Safe Torque Off" (STO) function

The "Safe Torque Off" function is enabled via the following parameters:

NOTICE
It is not possible to activate the control via safety terminals and PROFIsafe at the same time.

- STO via on-board terminals (F-DI 0, Basic Functions):
  - p9601.0 = 1, p9801.0 = 1
  - p9601.2 = 0, p9801.2 = 0
  - p9601.3 = 0, p9801.3 = 0
- STO via on-board terminals (with "Extended Functions" option):
  - p9601.0 = 0, p9801.0 = 0
  - p9601.2 = 1, p9801.2 = 1
  - p9601.3 = 0, p9801.3 = 0
- STO via PROFIsafe (with "Extended Functions" option):
  - p9601.0 = 0, p9801.0 = 0
  - p9601.2 = 1, p9801.2 = 1
  - p9601.3 = 1, p9801.3 = 1
- STO via PROFIsafe or on-board terminals (F-DI 0) (with "Extended Functions" option):
  - p9601.0 = 1, p9801.0 = 1
  - p9601.2 = 1, p9801.2 = 1
  - p9601.3 = 1, p9801.3 = 1

Selecting/deselecting "Safe Torque Off"

The following occurs when "Safe Torque Off" is selected:

- Each monitoring channel triggers safe pulse suppression via its switch-off signal path.
- A motor holding brake is applied (if connected and configured).

The following occurs when "Safe Torque Off" is de-selected:

- Each monitoring channel cancels safe pulse suppression via its switch-off signal path.
- The safety prompt "Apply motor holding brake" is canceled.
- Any pending STOP F or STOP A commands are canceled (see r9772/r9872).

Note

If "Safe Torque Off" is de-selected and selected again through one channel within the time in p9650/p9850, the pulses are canceled but a signal is not output.

If you want a message to be displayed in this case, however, you have to reconfigure N01620/N30620 via p2118 and p2119 as an alarm or fault.

Restart after the "Safe Torque Off" function has been selected

1. Deselect the function in each monitoring channel via the input terminals.
2. Issue drive enable signals.
3. Cancel the "switching on inhibited" and switch the drive back on.
   - 1/0 edge at input signal "ON/OFF1" (cancel "switching on inhibited")
   - 0/1 edge at input signal "ON/OFF1" (switch on drive)
4. Run the drives again.

Status for "Safe Torque Off"

The status of the "Safe Torque Off" (STO) function is displayed using the following parameters:

Parameter overview (see S110 List Manual)

- r9772 CO/BO: SI status (Control Unit)
- r9872 CO/BO: SI status (Power Module)
- r9773 CO/BO: SI status (Control Unit + Power Module)
- r9774 CO/BO: SI status (STO group)

Response time with the "Safe Torque Off" function

For the response times when the function is selected/deselected via input terminals, see the table in "Response times".

Example

Assumption:

Safety monitoring clock cycle time CU (r9780) = 2 ms and inputs/outputs sampling time = 4 ms

t_{R_typ} = 2 x r9780 (2 ms) + 4 ms = 8 ms

t_{R_max} = 4 x r9780 (2 ms) + 4 ms = 12 ms

Parameter overview (see S110 List Manual)

- r9780 SI monitoring clock cycle (Control Unit)
- r9880 SI monitoring clock cycle (Power Module)

8.4.2 Safe Stop 1 (SS1, time controlled)

General description

A Category 1 stop in accordance with EN 60204-1:2006 can be implemented with function "Safe Stop 1". The drive decelerates with the OFF3 ramp (p1135) once "Safe Stop 1" is selected and switches to "Safe Torque Off" once the delay time set in p9652/p9852 has elapsed.

CAUTION
Once the SS1 (time-controlled) function has been selected by parameterizing a delay in p9652/p9852, STO can no longer be selected directly via terminals.

Functional features of "Safe Stop 1"

SS1 is selected by setting p9652 and p9852 (delay time) not equal to "0"

- The function can be selected only in conjunction with "Safe Torque Off".
- When SS1 is selected, the drive is braked along the OFF3 ramp (p1135) and STO/SBC is automatically initiated after the delay time has expired (p9652/p9852).

  As soon as the function is selected, the delay time will start to run down - even if the function is deselected during this time. In this case, after the delay time has expired, the STO/SBC function is selected and then again de-selected immediately.
- The selection is realized through two channels - however braking along the OFF3 ramp, only through one channel.

Release of the SS1 function

The function is enabled by entering the delay time in p9652 and p9852.

Prerequisite

The "Safe Torque Off" function must be enabled.

In order that the drive can brake down to a standstill even when selected through one channel, the time in p9652/p9852 must be shorter than the sum of the parameters for the data cross-check (p9650/p9850 and p9658/p9858).

The time in p9652/p9852 must be dimensioned so that after selection, the drive brakes to a standstill.

Status for "Safe Stop 1"

The status of the "Safe Stop 1" function is displayed using the following parameters:

- r9772 CO/BO: SI status (Control Unit)
- r9773 CO/BO: SI status (Control Unit + Power Module)
- r9774 CO/BO: SI status (STO group)
- r9872 CO/BO: SI status (Power Module)

Overview of important parameters (see SINAMICS S110 List Manual)

- see "Safe Torque Off" function
- p1135[0...n] OFF3 ramp-down time
- p9652 SI Safe Stop 1 delay time (Control Unit)
- p9852 SI Safe Stop 1 delay time (Power Module)

8.4.3 Safe Brake Control (SBC)

Description

Safe brake control is used to activate holding brakes that function according to the standby current principle (e.g. motor holding brake).

The command for releasing or applying the brake is transmitted to the Safe Brake Relay via the Power Module. The Safe Brake Relay then carries out the action and activates the outputs for the brake accordingly.

Brake activation via the brake connection on the Safe Brake Relay is carried out using a safe, two-channel method.

Note

To ensure that this function can be used for Blocksize Power Modules, a Safe Brake Relay must be used (for more information, see the Equipment Manual).

When the Power Module is configured automatically, the Safe Brake Relay is detected and the motor holding brake type is defaulted (p1278 = 0).

⚠ WARNING

"Safe Brake Control" does not detect faults in the brake itself, such as brake winding short-circuit, worn brakes, etc.

If a cable breaks, this is only recognized by the "Safe Brake Control" function when the status changes, i.e. when the brake is applied/released.

Functional features of "Safe Brake Control" (SBC)

- When "Safe Torque Off" is selected or when safety monitors are triggered, "SBC" is performed with safe pulse suppression.
- Unlike conventional brake control, SBC is executed via p1215 through two channels.
- SBC is executed regardless of the brake control or mode set in p1215. SBC is not recommended, however, when 1215 = 0 or 3.
- The function must be enabled via parameter.
- Each time "Safe Torque Off" is selected, the holding brake is applied immediately with forced dormant error detection.

Enabling the "Safe Brake Control (SBC)" function

The "Safe Brake Control" function is enabled via the following parameters:

- p9602 SI enable safe brake control (Control Unit)
- p9802 SI enable safe brake control (Power Module)

The "Safe Brake Control" function is not selected until at least one safety monitoring function has been enabled (i.e. p9601 = p9801 ≠ 0).

Two-channel brake control

The function "Safe Brake Control" is carried out using a two-channel method, in which both the plus-potential (24 V) leading and the ground-potential leading brake connection are connected to the Safe Brake Relay.

The brake diagnosis can only reliably detect a malfunction in either of the switches in the Safe Brake Relay when the status changes (when the brake is released or applied).

If the Safe Brake Relay or its controller detects a fault, the brake current is switched off and a safe status is reached.

Response time with the "Safe Brake Control" function

For the response times when the function is selected/deselected via input terminals, see the table in "Response times".

Example

Assumption:

Safety monitoring clock cycle time CU (r9780) = 2 ms and
inputs/outputs sampling time = 4 ms

t_{R_typ} = 4 x r9780 (2 ms) + 4 ms = 12 ms

t_{R_max} = 8 x r9780 (2 ms) + 4 ms = 20 ms

Parameter overview (see SINAMICS S110 List Manual)

- r9780 SI monitoring clock cycle (Control Unit)
- r9880 SI monitoring clock cycle (Power Module)

8.4.4 Safety faults

The fault messages for Safety Basic Functions are stored in the standard message buffer and can be read from there. In contrast, the fault messages for Safety Integrated Extended Functions are stored in a separate safety message buffer (see section "Message buffer").

When faults associated with Safety Integrated Basic Functions occur, the following stop responses can be initiated:

Table 8- 5 Stop responses to Safety Integrated Basic Functions

<table>
<tr><th>Stop response</th><th>Triggered ...</th><th>Action</th><th>Effect</th></tr>
<tr><td>STOP A cannot be acknowledged</td><td>For all non-acknowledgeable safety faults with pulse suppression.</td><td rowspan="2">Trigger safe pulse suppression via the switch-off signal path for the relevant monitoring channel. During operation with SBC:
apply motor holding brake.</td><td rowspan="2">The motor coasts to a standstill or is braked by the holding brake.</td></tr>
<tr><td>STOP A</td><td>For all acknowledgeable safety faults with pulse suppression.
As a follow-up reaction of STOP F.</td></tr>
<tr><td></td><td colspan="3">STOP A is identical to stop Category 0 to EN 60204-1:2006.
With STOP A, the motor is switched directly to zero torque via the "Safe Torque Off (STO)" function.
A motor at standstill cannot be started again accidentally.
A moving motor coasts to standstill. This can be prevented by using external braking mechanisms (e.g. armature short-circuiting, holding or operational brake).
When STOP A is active, "Safe Torque Off" (STO) is effective.</td></tr>
<tr><td>STOP F</td><td>If an error occurs in the data cross-check.</td><td>Transition to STOP A.</td><td>Follow-up reaction STOP A with adjustable
delay (default setting without delay) if one of the safety functions is selected</td></tr>
<tr><td></td><td colspan="3">STOP F is permanently assigned to the data cross-check (DCC). In this way, errors are detected in the monitoring channels.
After STOP F, STOP A is triggered.
When STOP A is active, "Safe Torque Off" (STO) is effective.</td></tr>
</table>

⚠ WARNING

With a vertical axis or pulling load, there is a risk of uncontrolled axis movements when STOP A/F is triggered. This can be prevented by using "Safe Brake Control (SBC)" and a holding brake (not a safety brake!) with sufficient holding force.

Acknowledging the safety faults

Faults associated with Safety Integrated Basic Functions must be acknowledged as follows:

1. Remove the cause of the fault.
2. Deselect "Safe Torque Off" (STO).
3. Acknowledge the fault.

If safety commissioning mode is exited when the safety functions are switched off (p0010 ≠ 95 when p9601 = p9801 = 0), all the safety faults can be acknowledged.

Once safety commissioning mode has been selected again (p0010 = 95), all the faults that were previously present reappear.

NOTICE
Safety faults can also be acknowledged (as with all other faults) by switching the drive unit off and then on again (POWER ON). If this action has not eliminated the fault cause, the fault is displayed again immediately after power up.

Acknowledgment via PROFIsafe

The higher-level controller sets the signal "Internal Event ACK" via the PROFIsafe telegram (STW bit 7). A falling edge in this signal resets the status "Internal Event" and so acknowledges the fault.

Acknowledgment via F-DI

If the signal "Internal Event ACK" is connected with an F-DI, a falling edge in this signal resets the status "Internal Event" and so acknowledges the fault. For safety reasons, the external signal on the F-DI with the "Internal Event ACK" function must not be set continuously to the "1" level; for acknowledgment, it must first be set from the idle state "0" to "1" and then back to "0" again.

Description of faults and alarms

Note

The faults and alarms for SINAMICS Safety Integrated are described in the following documentation:

References: SINAMICS S110 List Manual

8.4.5 Forced checking procedure

Forced dormant error detection or test for the switch-off signal paths

The forced dormant error detection function at the switch-off signal paths is used to detect software/hardware faults at both monitoring channels in time and is automated by means of activation/deactivation of the "Safe Torque Off" function.

To fulfill the requirements of EN 954-1 / ISO 13849-1 regarding timely error detection, the two switch-off signal paths must be tested at least once within a defined time to ensure that they are functioning properly. This functionality must be implemented by means of forced dormant error detection function, triggered either in manual mode or by the automated process.

A timer ensures that forced dormant error detection is carried out as quickly as possible.

- p9659 SI timer for the forced dormant error detection.

Forced dormant error detection must be carried out at least once during the time set in this parameter.

Once this time has elapsed, an alarm is output and remains present until forced dormant error detection is carried out.

The timer returns to the set value each time the STO function is deactivated.

When the appropriate safety devices are implemented (e.g. protective doors), it can be assumed that running machinery will not pose any risk to personnel. For this reason, only an alarm is output to inform the user that a forced dormant error detection run is due and to request that this be carried out at the next available opportunity. This alarm does not affect machine operation.

The user must set the time interval for carrying out forced dormant error detection to between 0.00 and 9000.00 hours depending on the application (factory setting: 8.00 hours).

Examples of when to carry out forced dormant error detection:

- When the drives are at a standstill after the system has been switched on.
- When the protective door is opened.
- At defined intervals (e.g. every 8 hours).
- In automatic mode (time and event dependent)

NOTICE
The timer of the Basic Functions will be reset if the associated forced dormant error detection is executed and the Extended Functions are used simultaneously. The corresponding alarm of the Basic Functions is not triggered. Discrepancy is not checked at the terminals used to select the Basic Functions as long as STO is set by the Extended Functions. That is, the forced checking procedure of the Basic Functions always has to be executed without simultaneous selection of STO or SS1 by the Extended Functions. It is otherwise not possible to verify the correct control through the terminals.

8.5 Extended Functions

8.5.1 Safe Stop 1 (SS1, time and acceleration controlled)

General description

The "Safe Stop 1" function can be implemented to stop the drive in accordance with IEC 60204-1, stop category 1. The drive brakes with the OFF3 ramp (p1135) once "Safe Stop 1" is selected and switches to "Safe Torque Off" (STO) once the delay time has elapsed (p9356/p9556) or when the shutdown speed is reached (p9360/p9560).

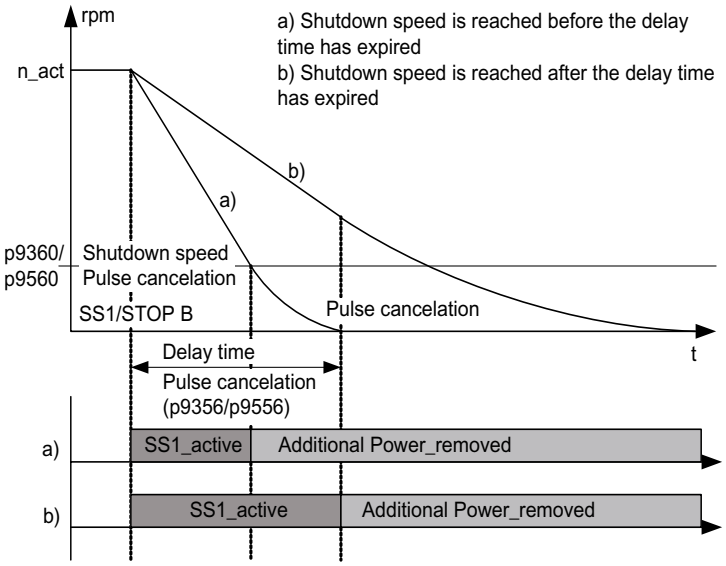

Figure 8-3 Sequence with SS1 selection

Functional features of "Safe Stop 1"

- If SS1 is selected, the drive is brought to a stop along the OFF3 ramp (p1135) and STO/SBC is automatically triggered on expiration of the delay time (p9356/p9556), or after having reached the shutdown speed (p9360/p9560).

  As soon as the function is selected, the delay time will start to run down - even if the function is deselected during this time. In this case, after the delay time has expired, the STO/SBC function is selected and then again de-selected immediately.
- The selection is realized through two channels - however braking along the OFF3 ramp, only through one channel.
- The "Safe Acceleration Monitor" (SBR) function is selected during braking (see "Safe Acceleration Monitor").

Note

If SS1 is selected, this can cause the device that governs the speed setpoint (PLC, motion controller, EPOS) to interrupt the ramp function by triggering OFF2.
Cause: intrinsic fault response, which is triggered when OFF3 is activated unexpectedly.
Parameterization or wiring must be carried out in such a way that the device that governs the speed setpoint can detect that SS1 has been triggered so that it can suppress the OFF2 fault response.

Commissioning

The function is selected by entering the delay time in p9356 and p9556. The delay time until the pulse is suppressed can be shortened by defining a shutdown speed in p9360 and p9560.

To enable the drive to decelerate to standstill, the time set in p9356/p9556 must be sufficient to allow the drive to decelerate to below the shutdown speed in p9360/p9560 with the OFF3 ramp (p1135).

The shutdown speed defined in p9360/p9560 must be set in such a way that personal safety or the safety of the machine is not compromised as of this speed and as a result of subsequent coasting by means of the pulse inhibit signal.

Responses

Speed limit violated (SBR):

- STOP A
- Safety message C01706/C30706

System errors:

1. STOP F with subsequent STOP A
2. Safety message C01711/C30711

Prerequisite

The time set in p9356/9556 must be dimensioned so that after selection, the drive brakes down to a standstill.

Status for "Safe Stop 1"

The status of the "Safe Stop 1" function is displayed using the following parameters:

- r9722.1 CO/BO: SI motion status signals, SS1 active
- r9722.0 CO/BO: SI motion status signals, STO active (power removed)

Overview of important parameters (see SINAMICS S110 List Manual)

- p1135[0...n] OFF3 ramp-down time
- p9301 SI motion enable safety functions (Power Module)
- p9501 SI motion enable safety functions (Control Unit)
- p9348 SI motion SBR actual speed tolerance (Power Module)
- p9548 SI motion SBR actual speed tolerance (Control Unit)
- p9356 SI motion pulse suppression delay time (Power Module)
- p9556 SI motion pulse suppression delay time (Control Unit)
- p9360 SI motion pulse suppression shutdown speed (Power Module)
- p9560 SI motion pulse suppression shutdown speed (Control Unit)
- r9722 CO/BO: SI motion, status signals

8.5.2 Safe Stop 2 (SS2)

Description

The "Safe Stop 2" (SS2) function is used to brake the motor safely on the OFF3 deceleration ramp (p1135) with subsequent transition to the SOS state (see also "Safe Operating Stop") after the delay time expires (p9352/p9552). The delay time set must allow for the drive to brake down to a standstill within this time. The standstill tolerance (p9330/p9530) may not be violated after this time.

After the braking operation is completed, the drives remain in speed control mode (speed setpoint n = 0). The drive is not disconnected from hazardous voltage. The default setpoint (e.g from the setpoint channel, or from a higher-level control) remains inhibited as long as SS2 is selected. The "Safe Acceleration Monitor" (SBR) function is selected during braking.

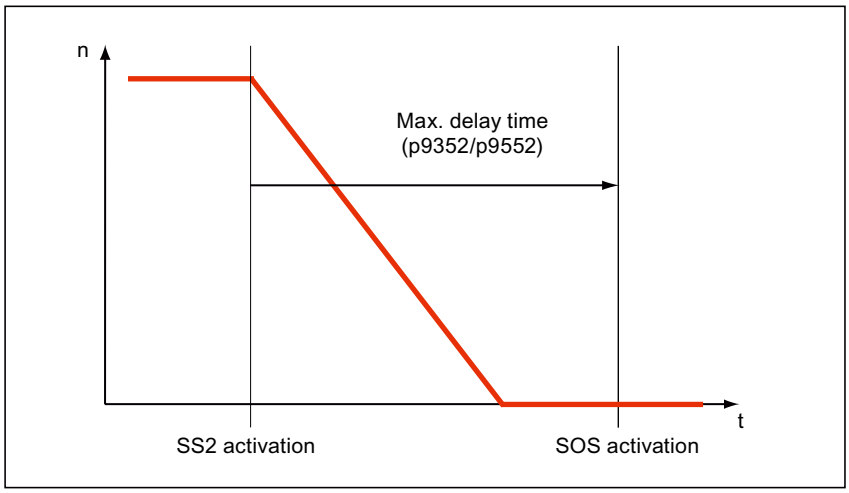

Figure 8-4 Sequence with SS2 selection

Note

If SS2 is selected, this can cause the device that governs the speed setpoint (PLC, motion controller, EPOS) to interrupt the ramp function by triggering OFF2.
Cause: intrinsic fault response, which is triggered when OFF3 is activated unexpectedly.
Parameterization or wiring must be carried out in such a way that the device that governs the speed setpoint can detect that SS2 has been triggered so that it can suppress the OFF2 fault response.

Responses

Speed limit violated (SBR):

- STOP A
- Safety message C01706/C30706

Standstill tolerance violated in p9330/p9530 (SOS):

- STOP B with subsequent STOP A
- Safety message C01707/C30707

System errors:

- STOP F with subsequent STOP A
- Safety message C01711/C30711

Overview of important parameters (see SINAMICS S110 List Manual)

- p1135[0...n] OFF3 ramp-down time
- p9301 SI motion enable safety functions (Power Module)
- p9501 SI motion enable safety functions (Control Unit)
- p9330 SI motion standstill tolerance (Power Module)
- p9530 SI motion standstill tolerance (Control Unit)
- p9348 SI motion SBR actual speed tolerance (Power Module)
- p9548 SI motion SBR actual speed tolerance (Control Unit)
- p9352 SI motion transition time STOP C to SOS (Power Module)
- p9552 SI motion transition time STOP C to SOS (Control Unit)
- r9722.0...15 CO/BO: SI motion integrated drive status signals

8.5.3 Safe Operating Stop (SOS)

Description

This function serves for failsafe monitoring of the standstill position of a drive.

Personnel can enter the protected machine areas without having to shut down the machine as long as SOS is active.

Drive standstill is monitored by means of an SOS tolerance window (p9330 and p9530). The SOS function is activated after SOS is selected and when the delay time set in p9351/p9551 expires. The drive must be braked to standstill within this delay time (e.g. by the controller). Any delay time is cleared after SOS is canceled and the drive can start up immediately.

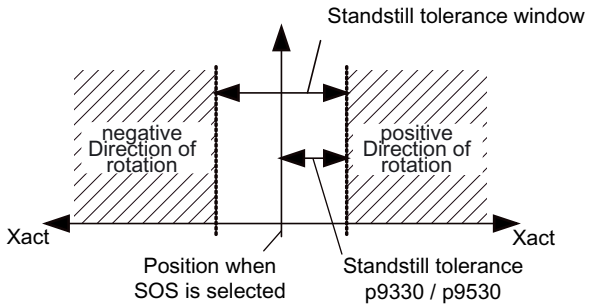

Figure 8-5 Standstill tolerance

Responses

Standstill tolerance violated in p9330/p9530:

- STOP B with subsequent STOP A
- Safety message C01707/C30707

System errors:

- STOP F
- Safety message C01711/C30711

Features

- The drive remains in the closed-loop control mode.
- A programmable standstill tolerance window is available.
- STOP B is the stop response after SOS has responded

Note

The range of the tolerance window should be oriented on the default standstill monitoring limit and be slightly higher than this limit.

Activation of the default monitoring functions may otherwise not be possible.

Note that safe position monitoring within a single-encoder system only works at a rough resolution (4 x pulses per revolution) (see "Safe actual value acquisition".

Overview of important parameters (see SINAMICS S110 List Manual)

- p9301 SI motion enable safety functions (Power Module)
- p9501 SI motion enable safety functions (Control Unit)
- p9330 SI motion standstill tolerance (Power Module)
- p9530 SI motion standstill tolerance (Control Unit)
- p9351 SI motion SLS changeover delay time (Power Module)
- p9551 SI motion SLS(SG) changeover delay time (Control Unit)
- r9722.0...15 CO/BO: SI Motion integrated drive status signals

8.5.4 Safely Limited Speed (SLS)

Description

The "Safely Limited Speed" (SLS) function is used to protect a drive against unintentional high speed. This is achieved by monitoring the current drive speed up to a switched speed limit.

SLS is used to prevent any unintentional movements outside the valid high limit. Limits must be specified based on results of the risk analysis. It is possible parameterize up to 4 different speed values.

The speed limit is activated once SLS has been selected and after the delay time (p9351/p9551) has elapsed. If a lower speed limit is selected, the drive must be decelerated to a speed below the new limit (e.g. by the controller) within this delay time. A delay time is not set if a higher speed limit is selected.

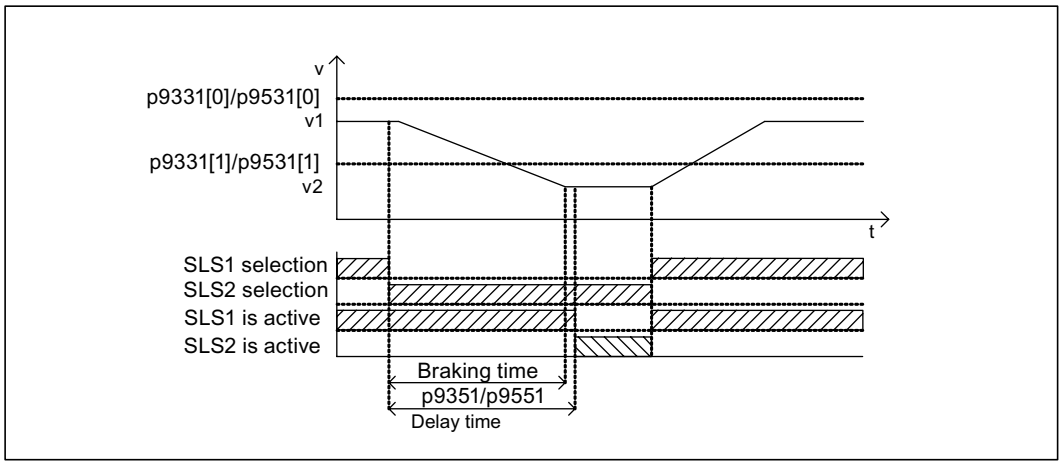

Figure 8-6 Delay time SLS phase changeover

A speed setpoint limit can be set as percentage in p9533. This value is used to calculate a speed setpoint limit r9733, depending on the selected speed limit p9531[x].

By contrast to SI limit parameters, this parameter specifies limits on the motor side instead of limits on the load side.

- r9733[0] = p9531[x] * p9533; x = selected SLS stage
- r9733[1] = - p9531[x] * p9533; x = selected SLS stage

Responses

Speed limit exceeded:

- Configured subsequent stop STOP A / B / C / D by means of p9363/p9563
- Safety message C01714/C30714

System errors:

- STOP F
- Safety messages C01711/C30711

Features

- 4 programmable limits p9331[0...3] and p9531[0...3]
- Programmable stop response by means of p9363/p9563

Changeover of speed limits

The changeover is controlled by means of binary signals from two F-DIs. The speed selection status can be checked using the r9720.9/r9720.10 parameters. Parameters r9722.9 and r9722.10 indicate the actual speed limit, bit r9722.4 must carry a "1" signal.

Table 8- 6 Changeover of speed limits:

F-DI for bit 0 (r9720.9)	F-DI for bit 1 (r9720.10)	Speed limit
0	0	p9331[0]/p9531[0]
0	1	p9331[1]/p9531[1]
1	0	p9331[2]/p9531[2]
1	1	p9331[3]/p9531[3]

The changeover from a lower to a higher speed limit takes effect without any delay.

The changeover from a higher to a lower limit triggers a delay time which can be set at the corresponding parameter (p9351 and p9551).

To ensure that the drive reaches the reduced speed below the new speed limit value once the delay time has elapsed, it must be decelerated accordingly within the delay time by means of the higher-level motion control/setpoint channel. However, if the actual speed is higher than the new limit value and the time has expired, an appropriate alarm with the configured stop response will be generated.

Overview of important parameters (see SINAMICS S110 List Manual)

- p9301.0 SI motion enable safety functions (Power Module)
- p9501.0 SI motion enable safety functions (Control Unit)
- p9331[0...3] SI motion SLS limits (Power Module)
- p9531[0...3] SI motion SLS (SG) limits (Control Unit)
- p9533 SI motion speed setpoint limit (Control Unit)
- p9351 SI motion SLS changeover delay time (Power Module)
- p9551 SI motion SLS changeover delay time (Control Unit)
- p9363[0...3] SI motion SLS stop response (Power Module)
- p9563[0...3] SI motion SLS (SG)-specific stop response (Control Unit)
- r9720 CO/BO: SI motion integrated drive control signals
- r9722.0...15 CO/BO: SI motion integrated drive status signals
- r9733[0...1] CO: SI motion effective speed setpoint limiting

8.5.5 Safe Speed Monitor (SSM)

Description

The SSM function is used for reliably detecting when a speed limit value has been undershot (p9346/p9546) (e.g. for standstill detection) in both directions. A failsafe output signal is available for further processing.

The function is activated automatically as soon as the Extended Functions are enabled with p9301.0 = p9501.0 = 1.

NOTICE
The speed limit of the SSM function (p9346/p9546) is also used as shutdown limit for the SBR function (safe acceleration monitoring). The SBR is deactivated if the speed is below this limit. The effect of the SSM safety function is therefore heavily limited if a relatively high SSM/SBR speed limit is set and the SS1 and SS2 stop functions are activated.

⚠ WARNING
STOP F (indicated by alarm C01711/C30711) only results in a follow-up response (STOP B / STOP A) if at least one of the safety-oriented functions (SOS or SLS) is active or has been selected. If only the SSM function is active, a STOP F crosswise comparison error does not result in a follow-up response (STOP B/STOP A). If SSM is used as a safety function, therefore, at least one of the SOS or SLS functions must be active/selected (e.g. by selecting a high SLS level).

The parameter p9346/p9546 "SI motion SSM (SGA n < nx) velocity limit n_x (CU)" is used to set the velocity limit (in mm/min). The abbreviation "SGA n < nx" indicates the safety function required for determining an output signal when a parameterizable velocity limit has been undershot.

If the velocity limit for the "Safe Speed Monitor" feedback signal (n < n_x) for detecting standstill is undershot, the "SSM feedback signal active" signal (SGA n < n_x) is set. When the set threshold value has been undershot, the "Safe Acceleration Monitor" (SBR) function is also deactivated.

The hysteresis for the SSM output signal is set in parameter p9347/p9547 "SI motion velocity hysteresis (crosswise)". If the maximum permissible velocity tolerance is overshot (i.e. one channel displays a velocity less than p9546 - p9547, while the other channel displays a velocity greater than p9546), a Stop F is issued.

In addition, the output signal for SSM can be smoothed by means of a PT1 filter by setting a filter time p9345/9545 "SI motion filter time nx".

During safe motion monitoring, both functions (hysteresis and filtering) can be activated or deactivated jointly by means of an enabling bit (p9301.16 (Power Modules) and p9501.16 (CU)). In the default setting, the functions are deactivated (p9301.16/p9501.16 = 0).

The following diagram shows the characteristic of the safe output signal SSM when the hysteresis is active:

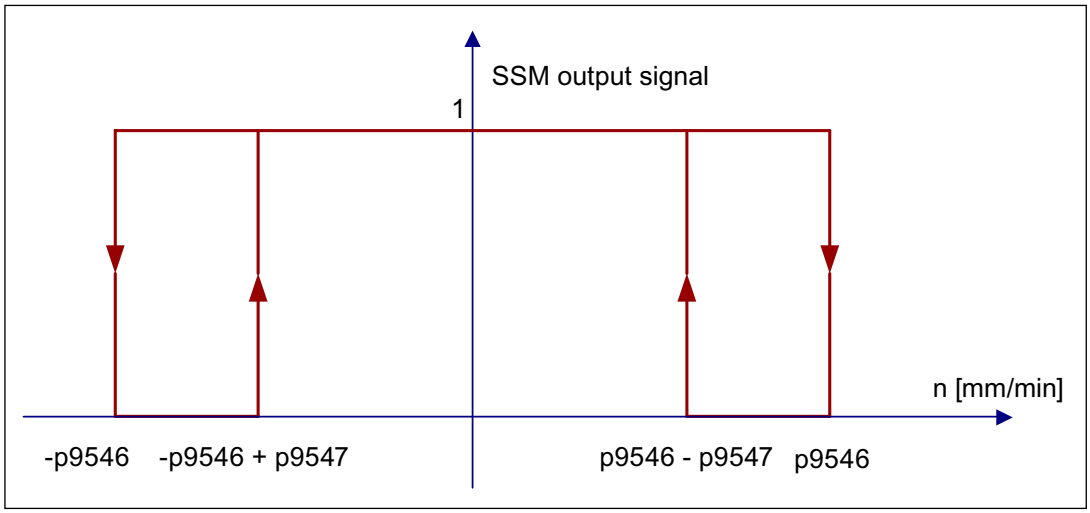

Figure 8-7 Safe output signal for SSM with hysteresis

Due to the hysteresis, the safe output signal for SSM can also lie above the parameterized velocity limit at 1. This is a characteristic of the hysteresis.

Note

When the hysteresis and filter is activated with output signal SSM, the axes behave in a time-delayed manner. This is a characteristic of the filter.

Features

- Safe monitoring of the speed limit specified in p9346 and p9546
- Parameterizable hysteresis via p9347 and p9547
- Variable PT1 filter via p9345 and p9545
- Failsafe output signal
- No stop response

Overview of important parameters (see SINAMICS S110 List Manual)

- p9345 SI motion filter time nx (Power Module)
- p9545 SI motion filter time nx (Control Unit)
- p9346 SI motion velocity limit n_x (Power Module)
- p9546 SI motion velocity limit n_x (Control Unit)
- p9347 SI motion velocity hysteresis (crosswise) (Power Module)
- p9547 SI motion velocity hysteresis (crosswise) (Control Unit)
- r9722.0...15 CO/BO: SI motion PROFIsafe status signals

8.5.6 Safe Acceleration Monitor (SBR)

Description

The "Safe Acceleration Monitor" (SBR) function is used for safe monitoring of acceleration. This safety function is not autarkic and is part of the SS1 (time and acceleration controlled) and SS2 (or STOP B and STOP C) safety functions. A STOP A is generated if any drive acceleration within the ramp-down phase exceeds the tolerance defined in p9348/p9548. The monitoring function is activated after SS1 (or STOP B) and SS2 (or STOP C) are set and is deactivated after the speed drops below the value set in p9346/p9546.

NOTICE
The speed limit of the SSM function (p9346/p9546) is also used as shutdown limit for the SBR function (safe acceleration monitoring). The SBR is deactivated if the speed is below this limit. The effect of the SSM safety function is therefore heavily limited if a relatively high SSM/SBR speed limit is set and the SS1 and SS2 stop functions are activated.

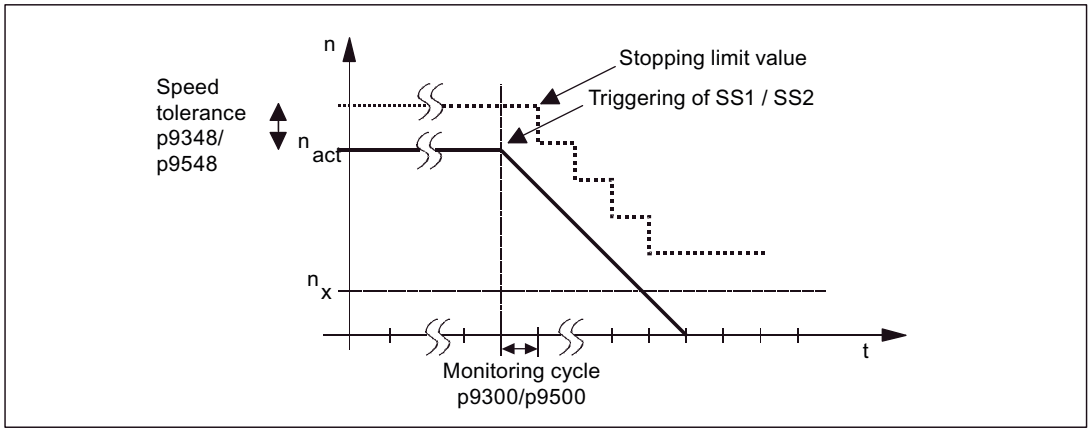

Figure 8-8 Characteristics of the shutdown limit for SBR

Calculating SBR tolerance of the actual speed

The following rules are valid for the parameterization of SBR tolerance:

The maximum speed increase after SS1 / SS2 is triggered is derived from the effective acceleration (a) and the duration of the acceleration phase. The duration of the acceleration phase is equivalent to one monitoring clock cycle (p9300/p9500) MC (delay from detecting an SS1 / SS2 until n_{set} = 0):

SBR tolerance

Actual speed SBR = acceleration * acceleration duration

The following setup rule is derived thereof:

At linear axes:
SBR tolerance [mm/min] = a [m/s^2] * MC [s] * 1000 [mm/m] * 60 [s/min]

At rotary axes:
SBR tolerance [rev/min] = a [rev/s^2] * MC [s] * 60 [s/min]

Recommendation:
The SBR tolerance value entered should be approx. 20% higher than the calculated value.

Responses

Speed limit violated (SBR):

- STOP A
- Safety message C01706/C30706

System errors:

- STOP F with subsequent STOP A
- Safety message C01711/C30711

Features

- Element of the SS1 (time and acceleration controlled) and SS2 functions
- Programmable minimum shutdown speed to be monitored

Overview of important parameters (see SINAMICS S110 List Manual)

- p9346 SI motion velocity limit n_x (Power Module)
- p9546 SI motion velocity limit n_x (Control Unit)
- p9348 SI motion SBR actual speed tolerance (Power Module)
- p9548 SI motion SBR actual speed tolerance (Control Unit)

8.5.7 Safety faults

Stop responses

Faults with Safety Integrated Extended Functions and violation of limits can trigger the following stop response:

Table 8- 7 Stop response overview

Stop response	Triggered ...	Action	Effect
STOP A	For all acknowledgeable safety faults with pulse suppression. As a follow-up reaction of STOP F.	Immediate pulse suppression	Drive coasts down
STOP B	Examples: - standstill tolerance violated in p9330/p9530 (SOS). - Configured subsequent stop p9363/p9563 for SLS. - When the SS2 function is active stop F results in follow-up stop B.	Immediate input of speed setpoint = 0 and start of timer t_B STOP A is triggered on expiration of t_B or if $n_{act} < n_{shutdown}$.	The drive brakes down along the OFF3 ramp and then goes into STOP A state
STOP C	Configured subsequent stop p9363/p9563 with SLS. When SLS is selected, the drive is decelerated with Stop C.	Immediate input of speed setpoint = 0 and start of timer t_C SOS is activated on expiration of t_C.	The drive brakes down along the OFF3 ramp, SOS is then activated
STOP D	Configured subsequent stop p9363/p9563 with SLS.	Timer t_D starts No drive-integrated response SOS is activated on expiration of t_D.	The drive must be decelerated by the higher-level control (within the drive group)! SOS is activated on expiration of the time t_D. An automatic response is only triggered if the standstill tolerance window is violated in SOS.
STOP F	If a fault occurs in the crosswise data comparison. Follow-up response STOP B.	Timer t_{F1} (Basic Functions) or t_{F2} (Extended Functions) No drive response	If a safety function (SOS, SLS) is active, transition to STOP A state on expiration of t_{F1} (Basic Functions), or to STOP B state on expiration of t_{F2} (Extended Functions).

Note

A delay time between STOP F and STOP B should only be set if an additional response is initiated during this time when the "Internal Event" (p9722.7) message signal is evaluated.

A monitoring function should also always be active even in automatic mode (e.g. SLS with a high limit speed) when the delay time is used.

On delays at the stop response transitions

- t_B: p9356/p9556
- t_C: p9352/p9552
- t_D: p9353/p9553
- t_{F1}: p9658/p9858
- t_{F2}: p9355/p9555
- $n_{shutdown}$: p9360/p9560

Stop response priorities

Table 8- 8 Stop response priorities

Priority classes	Stop response
Highest priority	STOP A
.....	STOP B
...	STOP C
..	STOP D
Lowest priority	STOP F

Priorities of stop responses and Extended Functions

Table 8- 9 Priorities of stop responses and Extended Functions

Stop response / extended function		Highest priority	...	...	...	...	Lowest priority
		STOP A	STOP B	STOP C	STOP D	STOP E	STOP F
Highest priority	STO	STOP A / STO	STO	STO	STO	STO	STO
...	SS1	STOP A	STOP B / SS1	SS1	SS1	SS1	SS1
Lowest priority	SS2	STOP A	STOP B	STOP C / SS2	SS2	SS2	SS2 / STOP B[2)]
	SOS	STOP A[1)]	STOP B[1)]	SOS	SOS	SOS	STOP B[2)]
	SLS	STOP A[3)]	STOP B[3)]	STOP C[4)]	STOP D[4)]	STOP E[4)]	STOP B[2)]

1) The SOS monitoring function remains active, but the fault response in the event of a fault can no longer be triggered because it is already present.

2) Stop B is the follow-up stop of Stop F, which is activated after a parameterizable time. Stop F alone does not have any effect; the active safety function is still present.

3) The SLS monitoring function remains active, although the fault response in the event of a fault can no longer be triggered because it is already present.

4) SLS remains active during the braking phase, after which the system switches to SOS.

The table above specifies which stop response / safety function is set when a stop is triggered when a safety function is active. The stops are arranged here from left to right in descending order of priority (stop A to F).

No overall priority is assigned in the individual safety functions. SOS remains active, for example, even if STO is requested. The safety functions that cause the drive to decelerate (STO, SS1, SS2) are specified from top to bottom in descending order of priority.

If a field contains two entries, the stop responses and safety functions have the same priority. Explanation:

- Stop A is equivalent to STO
- Stop B is equivalent to SS1
- Stop C is equivalent to SS2
- When the SS2 function is active, stop F results in follow-up stop B. SS2 remains active.

Examples for illustrating the information in the table:

1. Safety function SS1 has just been selected. Stop A remains active; a stop B operation that is currently in progress is not interrupted by this. The remaining stop functions (stops C to F) are replaced by SS1.
2. The SLS safety function is selected. This does not alter the function of stops A to D. Stop F now triggers a stop B because a safety function has been activated.
3. Stop response C is activated. If the STO or SS1 safety functions are active, this does not have any effect. If SS2 is active, this braking ramp is retained. If SOS is active, SOS remains effective, which is also the end status of stop C. When SLS is selected, the drive is decelerated with Stop C.

Acknowledging the safety faults

General

NOTICE
Safety faults can also be acknowledged (as with all other faults) by switching the drive unit off and then on again (POWER ON). If this action has not eliminated the fault cause, the fault is displayed again after power up..

Acknowledgment via PROFIsafe

The higher-level controller sets the signal "Internal Event ACK" via the PROFIsafe telegram (STW bit 7). A falling edge in this signal resets the status "Internal Event" and so acknowledges the fault.

Acknowledgment via F-DI

If the signal "Internal Event ACK" is connected with an F-DI, a falling edge in this signal resets the status "Internal Event" and so acknowledges the fault. For safety reasons, the external signal on the F-DI with the function "Internal Event ACK" may not be kept continuously on the "1" level or for acknowledgment it must first be set from the idle state "0" to "1" and then set back to "0" once more.

Description of faults and alarms

Note

The faults and alarms for SINAMICS Safety Integrated are described in the following documentation:

References: SINAMICS S110 List Manual

8.5.8 Message buffer

In addition to the fault buffer for F... faults and the alarm buffer for A... alarms, a special message buffer for C... safety messages is available for Safety Extended Functions.

The fault messages for the Safety Basic Functions are stored in the standard fault buffer (see "Buffer for faults and alarms").

The message buffer for safety messages is similar to the fault buffer for fault messages. The message buffer comprises the message code, message value, and message time (received/resolved). The following diagram shows how the message buffer is structured:

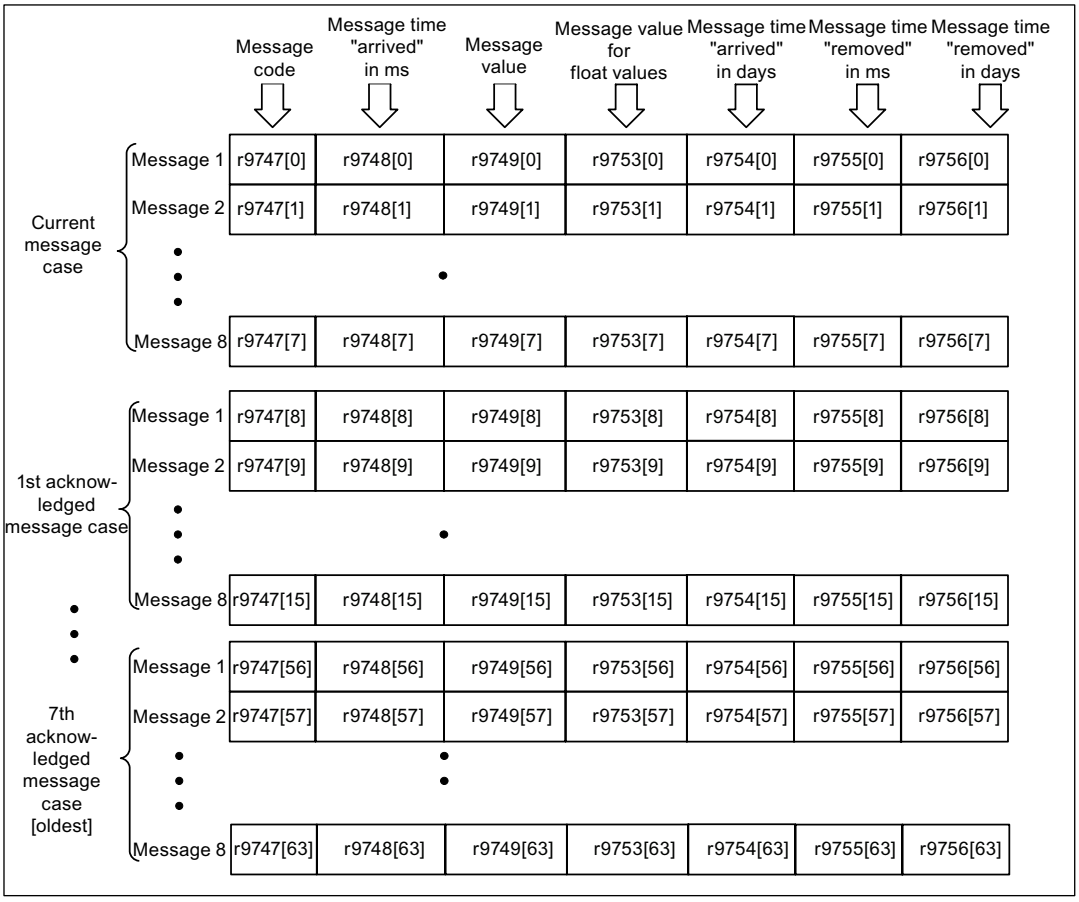

Figure 8-9 Structure of the message buffer

When a safety message is present, the bit 2139.5 = 1 ("Safety message present") is set. The entry in the message buffer is delayed. For this reason, the message buffer should not be read until a change in the buffer (r9744) has been detected after "Safety message present" is output.

The messages must be acknowledged via the failsafe inputs F-DI or via PROFIsafe.

Properties of the message buffer:

- A new message case comprises one or more messages and is entered in the "Current message case".
- The entries appear in the buffer according to the time at which they occurred.
- If a new message case occurs, the message buffer is reorganized accordingly. The history is recorded in "Acknowledged message case" 1 to 7.
- If the cause of at least one message in "Current message case" is rectified and acknowledged, the message buffer is reorganized accordingly. Messages that have not been rectified remain in "Current message case".
- If "Current message case" contains eight messages and a new message is output, the message in the parameters in index 7 is overwritten with the new message.
- r9744 is incremented each time the message buffer changes.
- A message value (r9749, r9753) can be output for a message. The message value is used to diagnose the message more accurately (refer to the message description for more details).

Deleting the message buffer:

The message buffer can be deleted as follows: p9752 = 0.
Parameter p9752 (SI message cases, counter) is also reset to 0 during POWER ON.

Overview of important parameters (see SINAMICS S110 List Manual)

- r2139.0...8 CO/BO: Status word, faults/alarms 1
- r9744 SI message buffer changes, counter
- p9752 SI message cases, counter
- r9747[0...63] SI message code
- r9748[0...63] SI message time received in milliseconds
- r9749[0...63] SI message value
- r9753[0...63] SI message value for float values
- r9754[0...63] SI message time received in days
- r9755[0...63] SI message time removed in milliseconds
- r9756[0...63] SI message time removed in days

8.5.9 Safe actual value acquisition

Supported encoder systems

Safety functions used to monitor movements (e.g. SS2, SOS, SLS and SSM) require safe actual value aquisition.

For safe speed/position sensing for SINAMICS S110, only a single-encoder system may be used.

Single-encoder system

Encoders within single-encoder systems are used to generate the failsafe actual values of the drive. This motor encoder must be appropriately qualified (see encoder types). The safety-relevant actual values are generated either directly in the encoder or in the Sensor Module and are transferred to the Control Unit by way of failsafe communication via DRIVE-CLiQ.

For motors without a DRIVE-CLiQ interface, the connection is established by means of additional Sensor Modules (SMC or SME).

NOTICE
When specifying the standstill tolerance window, observe that failsafe position monitoring within a single-encoder system only works at a rough resolution with 4 pulses per revolution.

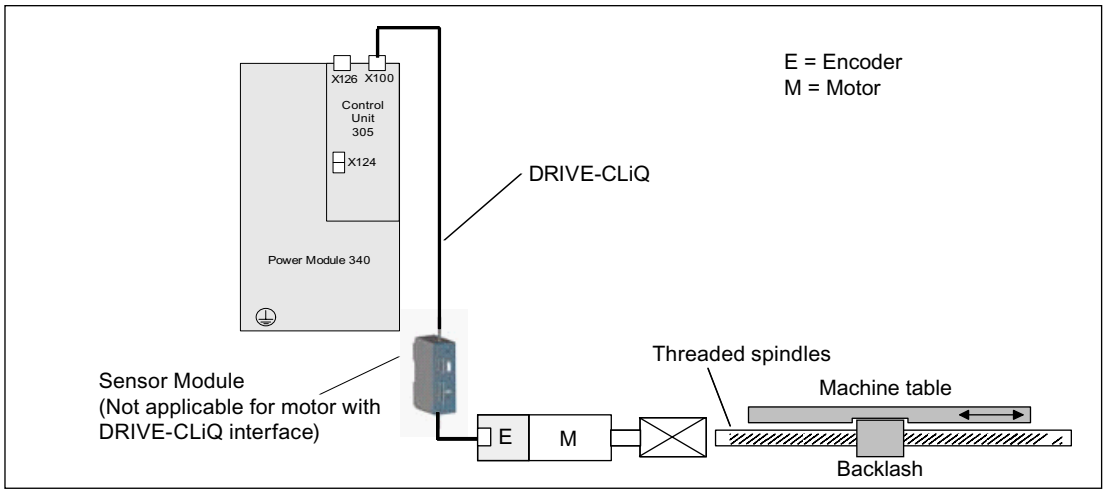

Figure 8-10 Example of a single-encoder system

Encoder types for single-encoder system

Incremental encoders or absolute encoders can be used for safe detection of the position values on a drive.

Safe actual value acquisition relies on redundant evaluation of the incremental channels A/B that supply sin/cos signals of 1 Vpp.

In single-encoder systems, encoders with photoelectric sampling only are permitted for safe actual value acquisition. These optical encoders must supply sin/cos signals of 1 Vpp on the incremental channels A/B.

The absolute position values can be transferred via the serial EnDat interface or an SSI interface to the controller.

Note

Basic absolute encoders (e.g. ECI, EQI) that offer an EnDat interface with additional sin/cos tracks, but operate according to an inductive measuring principle internally, are not permitted for single-encoder systems.

Two read parameters are available for safe motion monitoring:

r9730: SI Motion maximum velocity
Displays the maximum velocity (load side) permissible due to the acquisition of actual values for safe motion monitoring functions. The maximum velocity for actual value acquisition depends on the actual value update clock cycle (p9311/p9511). Parameter p9311/p9511 can be used to set the clock cycle of actual value acquisition for safe motion monitoring.

A slower clock cycle reduces the maximum permissible velocity, but also reduces the load on the Control Unit for safe actual value acquisition.

The maximum permissible velocity which, if overshot, can trigger faults in safe actual value acquisition, is displayed in parameter r9730.

With a default value of p9311/p9511 (0 ms), the isochronous PROFIBUS clock cycle is used (or 1 ms in non-isochronous mode).

r9731: SI Motion safe position accuracy

Displays the maximum positioning accuracy (load side) that can be ensured due to the acquisition of the actual value for the safe motion monitoring functions.

Both parameters r9730/r9731 depend on the relevant encoder type.

Overview of important parameters (see SINAMICS S110 List Manual)

- p9301.3 SI motion enable safety functions (Power Module), enable actual value synchronization
- p9501.3 SI motion enable safety functions (Control Unit), actual value synchronization
- p9302 SI motion axis type (Power Module)
- p9502 SI motion axis type (Control Unit)
- p9311 SI motion clock cycle actual value sensing (Power Module)
- p9511 SI Motion clock cycle actual value sensing (Control Unit)

- p9515 SI Motion encoder coarse position value configuration
- p9516 SI Motion motor encoder config., safety-relevant functions (CU)
- p9317 SI motion linear scale, grid division (Power Module)
- p9517 SI motion linear scale, grid division (Control Unit)
- p9318 SI motion encoder pulses per revolution (Power Module)
- p9518 SI motion encoder pulses per revolution (Control Unit)
- p9319 SI motion fine resolution Gn_XIST1
- p9519 SI motion fine resolution G1_XIST1 (Control Unit)
- p9320 SI motion spindle pitch
- p9520 SI motion spindle pitch (Control Unit)
- p9321[0...7] SI motion gearbox encoder/load denominator (Power Module)
- p9521[0...7] SI motion gearbox encoder/load denominator (Control Unit)
- p9322[0...7] SI motion gearbox encoder/load numerator (Power Module)
- p9522[0...7] SI motion gearbox encoder/load numerator (Control Unit)
- p9323 SI motion significant bits POS2 (Power Module)
- p9324 SI motion fine resolution POS2 (Power Module)
- p9325 SI motion relevant bits POS2 (Power Module)
- p9523 SI motion significant bits POS2 (Control Unit)
- p9524 SI motion fine resolution POS2 (Control Unit)
- p9525 SI motion relevant bits POS2 (Control Unit)
- p9342 SI motion actual value comparison tolerance (crosswise) (Power Module)
- p9542 SI motion actual value comparison tolerance (crosswise) (Control Unit)
- p9349 SI motion slip velocity tolerance (Power Module)
- p9549 SI motion slip velocity tolerance (Control Unit)
- r9713[0...2] SI motion diagnostics position actual value (MAKSIP)
- r9724 SI motion crosswise comparison clock cycle
- r9730 SI Motion maximum velocity
- r9731 SI Motion safe position accuracy

8.5.10 Forced dormant error detection

Forced dormant error detection and function test through test stop

To fulfill the requirements of EN 954-1/ ISO13849-1 PL d and IEC61508 with regard to timely fault detection, the functions and shutdown paths must be tested at least once within a defined period to ensure that they function properly.

The maximum permissible interval for forced dormant error detection with the Basic and Extended Functions is 9000 hours or once a year.

This functionality must be implemented by means of test stop triggering either in cyclic manual mode or by the automated process.

The test stop cycle is monitored. On expiration of the programmed timer, the alarm A01697: "SI motion: Test of motion monitoring required" is generated and a status bit is set which can be transferred to an output or to a PZD bit via BICO. This alarm does not affect machine operation.

The test stop must be initiated application-specific and be executed at a time which suits application requirements. This functionality is implemented by means of a single-channel parameter p9705 which can be wired via BICO either to an input terminal on the drive unit (CU), or to an IO-PZD in the drive telegram.

- p9559 SI Motion Forced dormant error detection timer (Control Unit)
- p9705 BI: SI Motion Test stop signal source
- r9723.0 CO/BO: SI motion PROFIsafe diagnostics signals, dynamic response required

A test stop does not require POWER ON. The acknowledgment is set by canceling the test stop request.

When the appropriate safety devices are implemented (e.g. protective doors), it can be assumed that running machinery will not pose any risk to personnel. For this reason, only an alarm is output to inform the user that a forced dormant error detection run is due and to request that this be carried out at the next available opportunity.

Examples of when to carry out forced dormant error detection:

- When the drives are at a standstill after the system has been switched on.
- Before the protective door is opened.
- At defined intervals (e.g. every 8 hours).
- In automatic mode (time and event dependent)

Note

STO is triggered when a test stop is carried out for the safety functions. The axis must not be in operation.

STO must not be active before the test stop is selected.

When blocksize Power Modules are used, the test stop must be triggered under controlled standstill conditions (speed setpoint setting 0) (OFF2 must not be active).

F-DI/F-DO forced dormant error detection

For forced dormant error detection of the F-DIs, the level of the F-DIs must be inverted, e.g. by activating the appropriate switch or triggering the appropriate function in the connected safety control. The correct reaction to the level change on the F-DIs must be observed by the person carrying out the operation.

If the F-DO is used, it must undergo forced dormant error detection by triggering the appropriate functions in the drive and the resulting level changes on the F-DO.

The correct function of the F-DO must be checked by whoever carries out forced dormant error detection. The required format of the check is determined by the F-DO interconnection.

- F-DO at an F-DI of a safety relay

  (as illustrated in the section titled "Application examples/Input/output interconnections for a safety relay with CU305)

  ⇒ In the case of dormant error detection for the F-DO, its two output drivers are checked by the F-DI of the connected safety relay to ensure that they are functioning correctly.

- F-DO at two contactors with positively driven auxiliary contacts

  (see the section titled Application examples/Interconnection of F-DO with redundant contactors)

  ⇒ The feedback contacts of both contactors have to be monitored by a controller or another monitoring unit to ensure that they both close when the F-DO is switched off (see Application examples).

- When connecting other loads, remember that the correct function of the two output drivers has to be monitored separately where forced dormant error detection is concerned.

8.6 Controlling the safety functions

8.6.1 Overview of F-DI/F-DOs and of their structure

Description

The failsafe input and output terminals (F-DI and F-DO) act as an interface between the internal Safety Integrated functionality and the process.

A dual channel signal applied to an F-DI (Failsafe Digital Input, safety-oriented digital input = safe input terminal pair) controls the active monitoring of the activation/deactivation of safety functions. This function also depends on the status of sensors (e.g. switches).

An F-DO (Failsafe Digital Output, safety-oriented digital output = safe output terminal pair) delivers a dual channel signal representing feedback from the safety functions. It is also suitable for the failsafe control of actuators (e.g. line contactor). See also diagram "Internal connection of F-DI / F-DO of the CU305".

Dual-channel processing of I/O signals

A dual-channel structure is realized for data input/output and for processing failsafe I/O signals. All requests and feedback signals for failsafe functions should be entered or tapped using both channels.

The following options are available for controlling Safety Integrated functions:

- Control via safe input terminals on the Control Unit
- Control by way of PROFIsafe

The Basic Functions (STO, SBC, SS1 time controlled) can be controlled simultaneously using a safe input terminal pair (F-DI0) and via PROFIsafe. For the Extended Functions, control is only available either via the safe input terminal pairs or via PROFIsafe.

8.6.2 Control of the Basic Functions via a safe input terminal pair

8.6.2.1 Control via terminals on the Control Unit and the power unit

Features

- Dual-channel structure via two input terminals as a safe input terminal pair
- Input filter for test signals with a dark period < 1 ms

Overview of the safety function terminals for SINAMICS S110

The digital input terminals DI16 and DI17 are defined as F-DI0 for the control of the Basic Functions, if these are enabled (see diagram "Internal connection of DI/DO of the CU305 with safety function"). Both terminals are processed securely by different signal evaluators in two channels. Both terminals must be operated simultaneously, otherwise a fault will be issued.

Simultaneity and tolerance time of the two monitoring channels

The "Safe Torque Off" function must be selected/deselected simultaneously in both monitoring channels using the input terminals and is only effective for the associated drive.

1 signal: Deselecting the function

0 signal: Selecting the function

"Simultaneously" means:

The changeover must be complete in both monitoring channels within the parameterized tolerance time.

- p9650 SI SGE changeover tolerance time (Control Unit)
- SI SGE changeover, tolerance time (Power Module)

If the "Safe Torque Off" function is not selected/deselected within the tolerance time, this is detected by the crosswise comparison, and fault F01611 or F30611 (STOP F) is output. In this case, the pulses have already been canceled as a result of the selection of "Safe Torque Off" on one channel.

8.6.3 Control of the Safety Integrated Extended Functions using safe input terminals

General information

The Control Unit CU305 includes 6 digital inputs, which can be used as 3 safe input terminal pairs (F-DI) for the control of the Extended Functions.

Furthermore, the CU305 can be extended by exactly one digital output as a safe output terminal pair (F-DO) and usable for the Extended Functions.

- F-DI 0 = DI16/DI17
- F-DI 1 = DI18/DI19
- F-DI 2 = DI20/DI21
- F-DO 0 = DO16+/DO16-

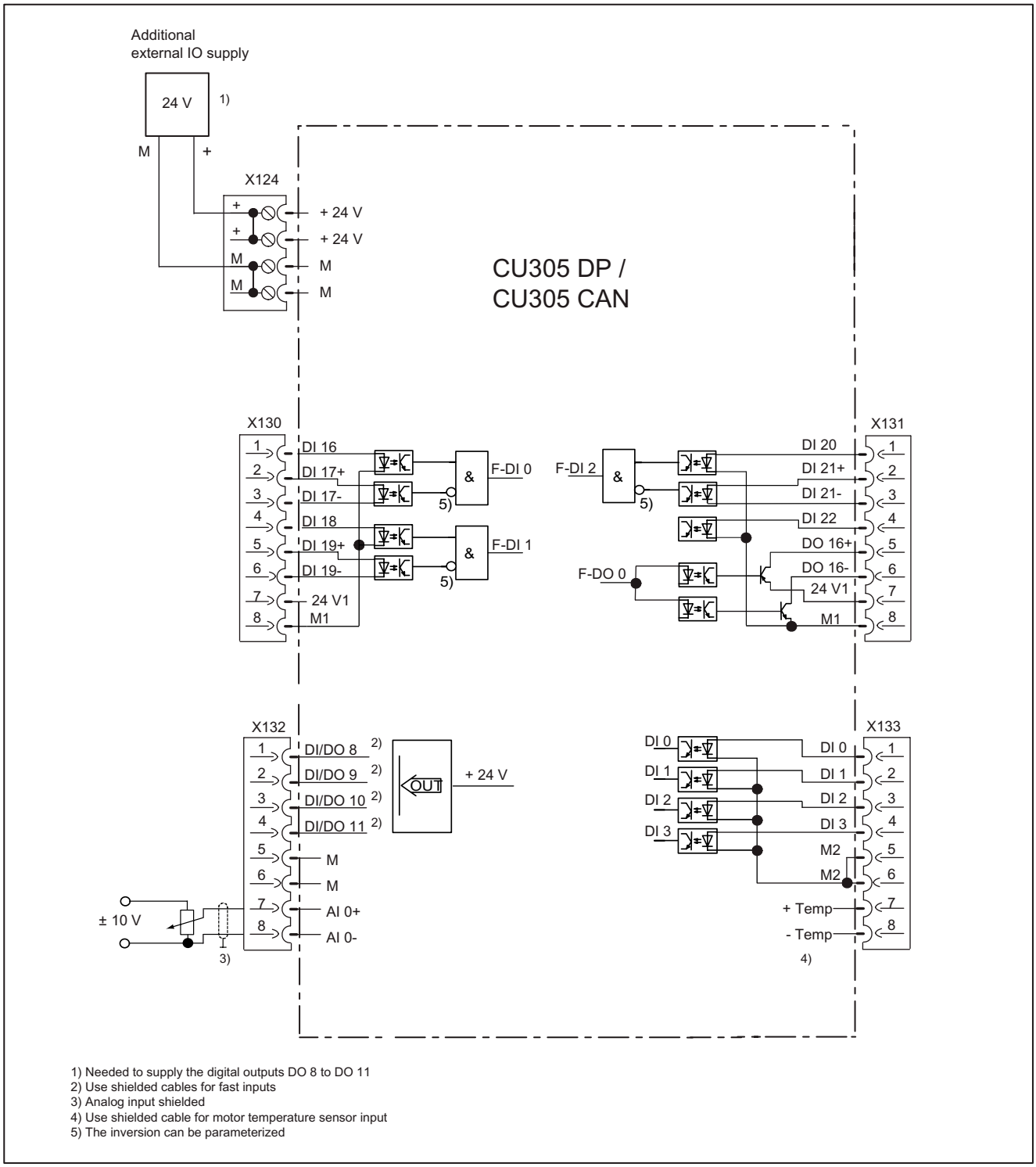

Figure 8-11 Internal connections of the DI/DO of the CU305 with the safety function

Description

Failsafe digital inputs (F-DI) consist of two digital inputs. The cathode of the optocoupler is routed to the second digital input in order to allow the connection of an M-switching F-DO output (the anode must be wired to 24 V DC).

Parameter p10140 is used to determine whether an F-DI is operated as NC/NC or NC/NO contact. The status of each DI can be read at parameter r0722. The same bits of both drive objects are logically linked by AND operation and return the status of the relevant F-DI.

Explanation of terms:

NC contact / NC contact: To select the safety function, a "zero level" must be present on both inputs.

NC contact / NO contact: To select the safety function, a "zero level" at input 1 and a "1 level" at input 2 must be present.

The signal states at the two associated digital inputs (F-DI) must assume the same status configured in p10140 within the monitoring time set in p10002.

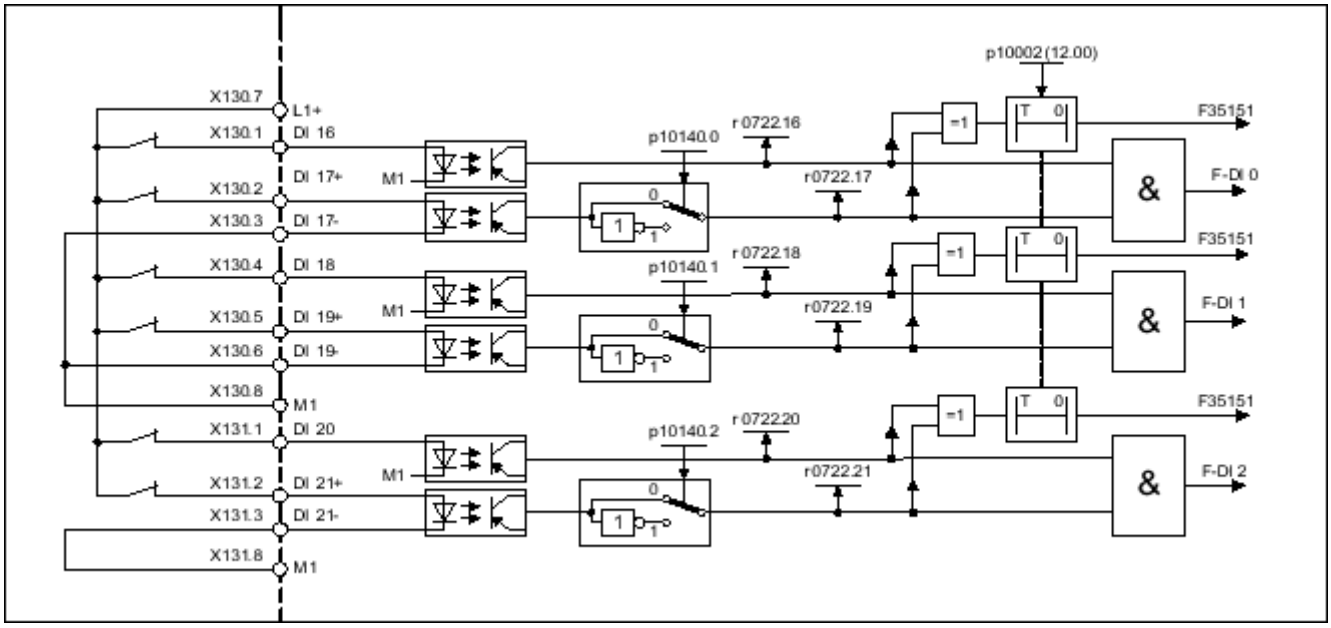

Figure 8-12 Overview of F-DI 0 ... 2

F-DI features

- Failsafe configuration with two digital inputs per F-DI
- Input filter for test signals with a dark period of less than 1 ms
- Configurable connection of NC/NC or NC/NO contacts by means of parameter p10140
- Status parameter r0722
- Adjustable time window for monitoring discrepancy at both digital inputs by means of parameter p10002 for all F-DIs
- 2. Digital input with additional tap of the optocoupler cathode for connecting an M-switching output of a failsafe controller.

⚠ WARNING

In contrast to mechanical switching contacts (e.g. EMERGENCY STOP switches), leakage currents can still flow on semiconductor switches such as those usually used at digital outputs even when they have been switched off. This can lead to false switching states if digital inputs are not connected correctly.

The conditions for digital inputs/outputs specified in the relevant manufacturer documentation must be observed.

⚠ WARNING

In accordance with IEC 61131 Part 2, Chapter 5.2 (2008), only outputs that have a maximum residual current of 0.5 mA when "OFF" can be used to connect CU305 digital inputs with digital semiconductor outputs.

The inclusion of additional load resistors makes it possible to use digital outputs with larger residual currents to connect CU305 inputs.

- F-DI = safety-related dual-channel digital input
- F-DO = safety-related dual-channel digital output

If the digital outputs from another device (e.g. F-DOs on a safety PLC) with a residual current greater than 0.5 mA when "OFF" are connected to the CU305 F-DIs, load resistors should be connected in parallel to both connections on the F-DI.

The maximum permissible voltage for a CU305 F-DI when "OFF" is 5 V (in accordance with IEC 61131-2, 2008).

Figures
- "F-DI at plus-minus-switching safe output ..." and
- "F-DI at plus-plus-switching safe output ..."
in the section titled "Input/output interconnections for a safety relay with CU305" show exactly how the protective circuits for F-DIs with additional load resistors are wired.

- Dimensioning of load resistors - example 1:

  According to manufacturer documentation, the leakage current of an F-DO on a safety PLC is 1 mA; in other words, it is around 0.5 mA higher than is permissible for the F-DI.

  The necessary load resistance is therefore R = 5 V/0.5 mA = 10 kΩ.

  At maximum supply voltage, the power loss for this resistor is:

  P = $(28.8\ V)^2/R$ = 83 mW. The resistor is to be permanently dimensioned for this power loss.

- Dimensioning of load resistors - example 2:

  If further conditions for the digital output (e.g. a minimum load or a maximum load resistance) are specified in the manufacturer documentation, these must be taken into account.

  For example, a minimum load of 1 kΩ is specified for the SIMATIC ET200S 4 F-DO I/O module (6ES7 138-4FB02-0AB0).

  Therefore, two additional 1 kΩ load resistors and a continuous load capacity of at least P = $(28.8\ V)^2/R$ = 830 mW are required to connect an F-DO of this kind to a CU305 F-DI.

The following terminals can be used to connect the external resistors, for example:

- Phoenix Contact
  - P-CO component connector

    - part number: 3036796
  - Three-wire terminal with quick-acting locking technique QTC 1.5-TWIN-TG, part number: 3050413

    Alternative to this terminal:
  - Universal terminal with screw connection UT 4-TWIN-TG

    - part number: 3046595
  - Universal terminal UDK 4-DUR

    - part number: 2775207
- • WAGO:
  - Empty component plug housing

    - part number: 280-801
  - 4-conductor base terminal, center marking, for TS 35, front wiring, CAGE CLAMP® terminal, horizontal design

Overview of important parameters (see SINAMICS S110 List Manual)

- r0722 CO/BO: CU digital inputs, status
- p10002 SI discrepancy monitoring time
- p10140 SI F-DI input mode

8.6.4 Overview of the F-DOs

Description

The failsafe digital output (F-DO) consists of two digital outputs. At the first digital output DO16+ the 24 V potential connected to the terminal 24V1 is switched, and at the second terminal the ground potential connected to terminal M1 is switched (see diagram below "Overview F-DO").

To enable forced dormant error detection, the F-DO must be dynamized with the parameterized function (p9559) (for additional information on forced dormant error detection, see the corresponding function description in the "Extended Functions" section).

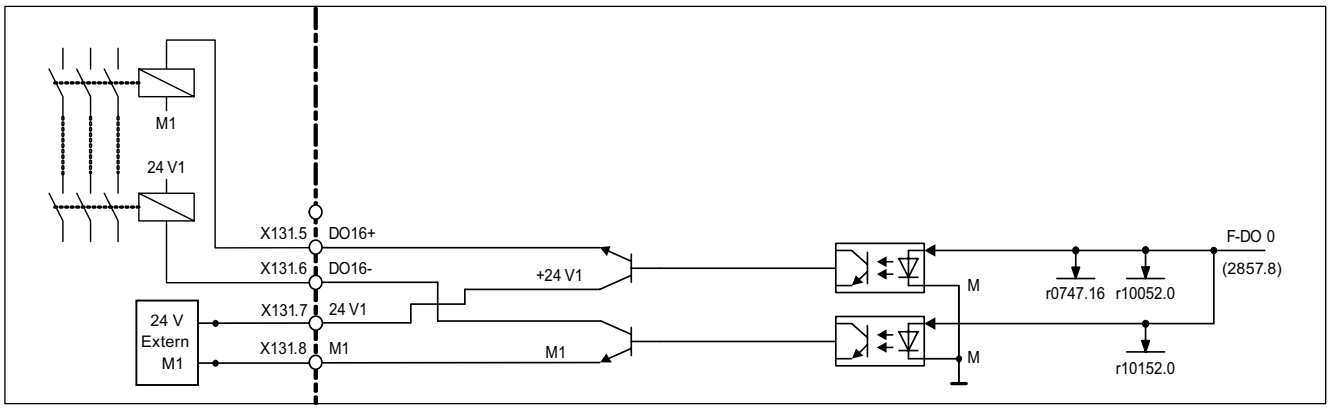

Figure 8-13 F-DO Overview

Signal sources of the F-DO

The following signals are available for outputs for the F-DO. Setting using parameter p10042:

- Power removed (STO active)
- SS1 active
- SS2 active
- SOS active
- SLS active

- Internal event (no active safety fault)
- Safe state

  For the creation of the Signal Safe State, the following signals can be called upon via p10039[0...3]:

  – Power removed (STO active)
  – SS1 active
  – SS2 active
  – SOS active
  – SLS active

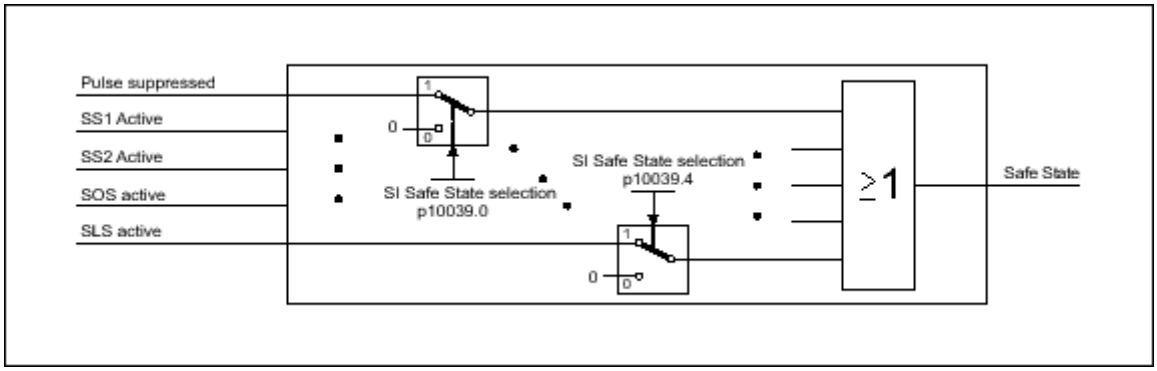

Figure 8-14 Safe state selection

The different signals selected through p10039 are logically linked by means of OR operation. Result of these logic operations is the "Safe State".

F-DO features

- Failsafe design with two digital outputs (plus and minus switching)
- Status parameter r10052
- If the digital output is used for Safety Integrated functions, it is not available for other digital outputs.

Function diagrams (see SINAMICS S110 List Manual)

- 2853 Safety Integrated - Extended Functions (F-DO 0)
- 2856 Safety Integrated - Extended Functions, safe state selection
- 2857 Safety Integrated - Extended Functions, assignment F-DO 0

Overview of important parameters (see SINAMICS S110 List Manual)

- p10042[0..5] SI F-DO 0 signal sources
- r10052 CO/BO: SI status of digital outputs

8.6.5 Control by way of PROFIsafe

Introduction

Safety functions can also be activated via PROFIsafe telegrams in addition to terminals. On PROFIBUS communication is possible via PROFIsafe telegram 30. This section describes the structure of the associated control and status words (see table "Description of the PROFIsafe control word" and "Description of the PROFIsafe status word").

The SINAMICS S110 drive with PROFIsafe configuration represents a PROFIsafe slave (F-slave) featuring failsafe PROFIBUS communication with the failsafe host; or a PROFIsafe-Device (F-device) featuring failsafe PROFINET communication with the failsafe host (PROFINET connection in preparation).

The drive is equipped with dual-channel PROFIsafe communication functions.

The failsafe values are activated and STO is set immediately if a PROFIsafe communication error is detected.

All parameters used to control PROFIsafe communication are protected against unintentional changes by password and checksum. The telegrams are configured using the configuration tool (e.g. HW Config + F-Configuration Pack) on the failsafe host.

Control via PROFIsafe is enabled by setting p9601.3 = p9801.3 = 1.

PROFIsafe STW (S_STW1, PZD1 in telegram 30, output signals)

See function diagram [2840].

Table 8- 10 Description of the PROFIsafe STW

Bit	Meaning	Remarks		BICO
0	STO	1	STO deactivation	r9720.0
		0	STO activation	
1	SS1	1	SS1 deactivation	r9720.1
		0	SS1 activation	
2	SS2	1	SS2 deactivation	r9720.2
		0	SS2 activation	
3	SOS	1	SOS deactivation	r9720.3
		0	SOS activation	
4	SLS	1	SLS deactivation	r9720.4
		0	SLS activation	
5	Reserved	-	-	-
6	Reserved	-	-	-
7	Internal Event ACK	1/0	Acknowledgment	r9720.7
		0	No acknowledgment*	
8	Reserved	-	-	-
		-	-	
9	Select SLS bit 0	-	Selection of the speed limit for SLS (2 bits)	r9720.9
10	Select SLS bit 1	-		r9720.10
11...15	Reserved	-	-	-

*A static zero signal must be present continuously

PROFIsafe ZSW (S_ZSW1, PZD1 in telegram 30, input signals)

See function diagram [2840].

Table 8- 11 Description of the PROFIsafe status word (ZSW)

Bit	Meaning	Remarks		BICO
0	STO active	1	STO active	r9722.0
		0	STO deactivated	
1	SS1 active	1	SS1 active	r9722.1
		0	SS1 deactivated	
2	SS2 active	1	SS2 active	r9722.2
		0	SS2 deactivated	
3	SOS active	1	SOS active	r9722.3
		0	SOS deactivated	
4	SLS active	1	SLS active	r9722.4
		0	SLS deactivated	
5	Reserved	-	-	-
6	Reserved	-	-	-
7	Internal Event	1	Internal event	r9722.7 inverted
		0	No internal event	
8	Reserved	-	-	-
		-	-	
9	Active SLS level bit 0	-	Display of the velocity limit for SLS (2 bits)	r9722.9
10	Active SLS level bit 1	-		r9722.10
11	SOS selected	1	SOS selected	r9722.11
		0	SOS deactivated	
12...14	Reserved	-	-	-
15	SSM (speed)	1	SSM (speed below limit value)	r9722.15
		0	SSM (speed higher than/equal to limit)	

8.7 Commissioning

8.7.1 Safety Integrated firmware versions

General information

The safety firmware on the CU305 Control Unit may have a different version number to the overall firmware version.

The parameters listed below can be used to read the version IDs from the relevant hardware components.

Read the overall firmware version via:

- r0018 Control Unit firmware version

The following firmware data can be read for the Basic Functions:

- r9770 SI version, drive-autonomous safety functions (Control Unit)

The following firmware data can be read for the Extended Functions:

- r9590 SI Motion Version safe movement monitoring (Control Unit)
- r9890 SI version (Sensor Module)

⚠ WARNING

For FW4.1:

In a system configuration, the firmware versions of the DRIVE-CLiQ components can only differ from the versions installed on the memory card or the internal memory if
a) the automatic upgrade/downgrade (parameter p7826) is deactivated
or
b) components with a more recent firmware version can no longer be downgraded to the version installed on the CF card.

Scenario a) is not permissible if Safety Integrated is used and is monitored by the safety firmware of the Control Unit.

Scenario b) is only permissible if this combination has been explicitly approved by the manufacturer.

Basic or Extended Functions that have been enabled are checked to determine whether the parameter for the automatic firmware update is set (p7826 = 1). This means the firmware version of the connected Sensor Module (if any) or the connected motor with DRIVE-CLiQ connection is compared to the firmware version on the Control Unit during booting, and updated if necessary.

During the acceptance test for the Safety Integrated Basic Functions, the safety firmware version of the Control Unit is to be read and logged.

During the acceptance test for the Safety Integrated Extended Functions, the safety firmware versions of the Control Unit and the Sensor Modules or motor with DRIVE-CLiQ connection required for the safety functions are to be read, logged, and checked against the list below.

The list of permissible safety firmware version combinations which must be used as a reference during the test, can be found under "Product Support" at the following address:
http://support.automation.siemens.com/WW/view/de/28554461
The procedure for checking is described in the following.

Procedure for checking the safety firmware version combinations

The document in the link provided contains tables listing the permissible safety firmware version combinations for the different safety function classes (SINAMICS basic functions, SINAMICS Extended Functions, SINUMERIK Safety Integrated).

The safety firmware version relevant for the safety function can be read from the Control Unit. The row containing this version number specifies the associated, permissible safety firmware versions of the relevant drive components. These versions must be compatible with the versions installed on your system.

8.7.2 General commissioning information

8.7.2.1 Introduction

The safety functions are commissioned using the screen forms in the STARTER. These functions are available for each drive at "Functions" -> "Safety Integrated".

The password "0" is set by default.

NOTICE
For safety reasons, safety functions cannot be commissioned offline with the STARTER commissioning tool (or SCOUT).

Prerequisites for commissioning the safety functions (Basic Functions)

1. Commissioning of the drives must be complete.
2. Non-safe pulse suppression must be present (e.g. via OFF1 = "0" or OFF2 = "0")

   If the motor holding brake is connected and parameterized, the holding brake is applied.
3. The terminals for "Safe Torque Off" must be wired.
4. For operation with SBC, the following applies:

   A motor with motor holding brake must be connected to the appropriate terminal of the Power Module.

Standard commissioning of the safety functions

1. A commissioned project that has been uploaded to STARTER can be transferred to another drive unit including the existing safety parameterization.
2. If the source and target devices have different software versions, the reference checksums (p9799, p9899) may have to be adapted. This is indicated by the faults F01650 (fault value: 1000) and F30650 (fault value: 1000).
3. Once the project has been downloaded to the target device, an acceptance must be carried out. This is indicated by fault F01650 (fault value: 2004).

8.7.2.2 Setting the sampling times

Terminology

The software functions installed in the system are executed cyclically at different **sampling times**.

Safety functions are executed within the **monitoring clock cycle** (p9300/p9500).

Communication on PROFIBUS is handled cyclically by means of the **communication clock cycle.**

During the PROFIsafe scan cycle, the PROFIsafe telegrams issued by the master are evaluated.

Rules for setting the sampling times

- The monitoring clock cycle (p9300/p9500) can be set between 500 µs to 25 ms.

  However, the calculation time required for the Extended Functions in the Control Unit depends on the monitoring clock cycle, that is, shorter clock cycles extend the calculation time. The availability of a specific monitoring clock cycle therefore depends on calculation time resources of the Control Unit.

  Calculation time resources on the Control Unit are affected primarily by the enabled extended functions and the selected technological functions.
- The monitoring cycle (p9300/p9500) must be an integer multiple of the actual value update clock cycle (p9311/p9511).

Overview of important parameters (see SINAMICS S110 List Manual)

- p9300 SI motion monitoring clock cycle (Power Module)
- p9311 SI motion clock cycle actual value sensing (Power Module)
- p9500 SI motion monitoring clock cycle (Control Unit)
- p9511 SI Motion clock cycle actual value sensing (Control Unit)

8.7.3 Commissioning the safety terminals by means of STARTER/SCOUT

8.7.3.1 Basic sequence of commissioning

The following conditions must be met before you can configure the safety terminals:

- Concluded initial commissioning of the drive

Table 8- 12 Configuration sequence

Step	Execution
1	Configuring safety terminals
2	Configure the inputs
3	Configure the outputs
4	Change the safety password
5	Activate the configuration by selecting "Activate settings"
6	Save the project in STARTER
8	Execute POWER ON
9	Acceptance test

8.7.3.2 Configuration start screen

Description

The following functions can be selected in the start screen:

- Configuration

  Opens the "Configuration" screen
- Inputs

  Opens the "Inputs" screen
- Outputs

  Opens the "Outputs" screen
- Control

  Opens the "Drive" screen

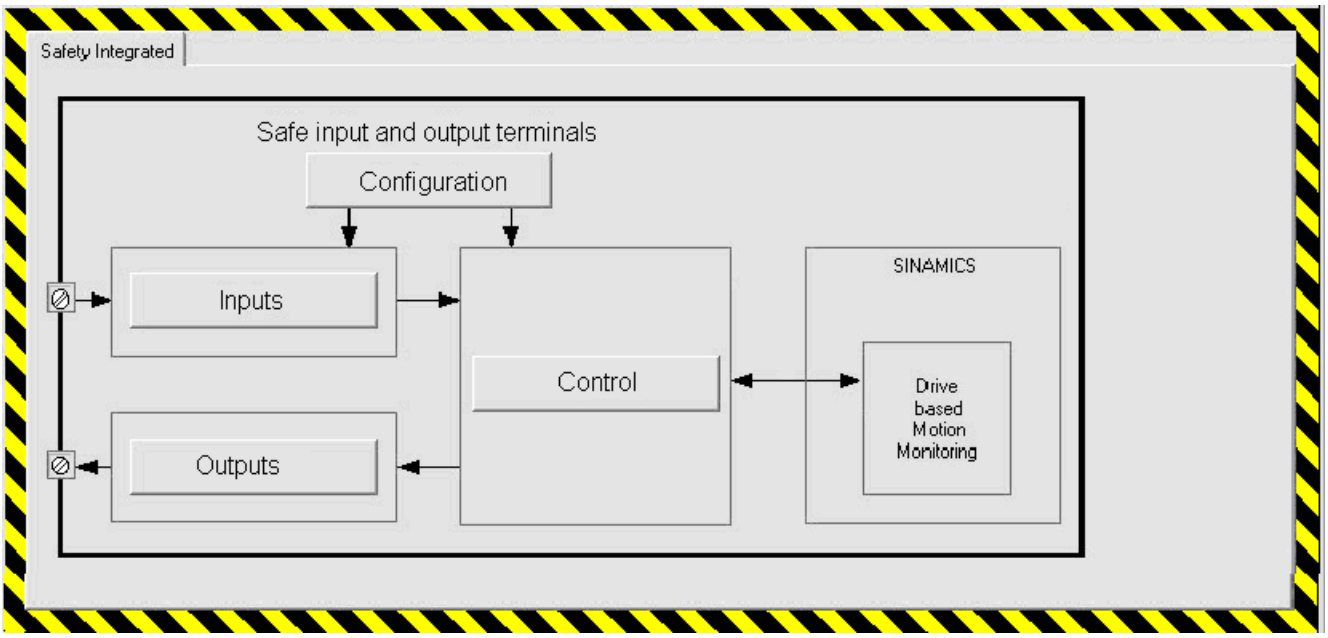

Figure 8-15 Configuration start screen

8.7.3.3 Configuration of the safety terminals

Configuration screen of the terminals for Safety Integrated

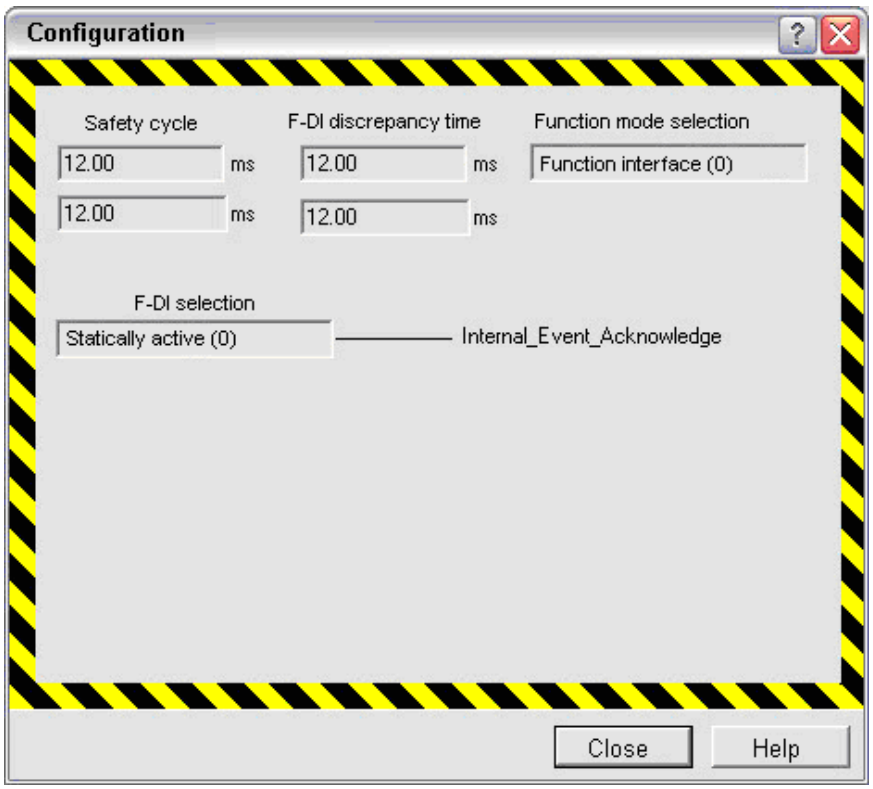

Figure 8-16 Configuring safety terminals

Functions of this screen:

- Safety cycle (p9500)

  The safety clock cycle corresponds to the sampling time of the safety terminals.

  – Enter the safety clock cycle in this input box

- F-DI discrepancy time (p10002)

  The signal states at the two terminals of an F-DI are monitored in order to determine whether these have assumed the same logical state within the discrepancy time.

- F-DI selection (p10006)

  The Extended Functions enter a safety alarm in a special alarm buffer upon the detection of internal errors or violation of limits. This alarm must be acknowledged safely. You can assign an F-DI terminal pair for safe acknowledgment.

- Function mode selection (in preparation)

8.7.3.4 F-DI/F-DO configuration

Inputs screen F-DI

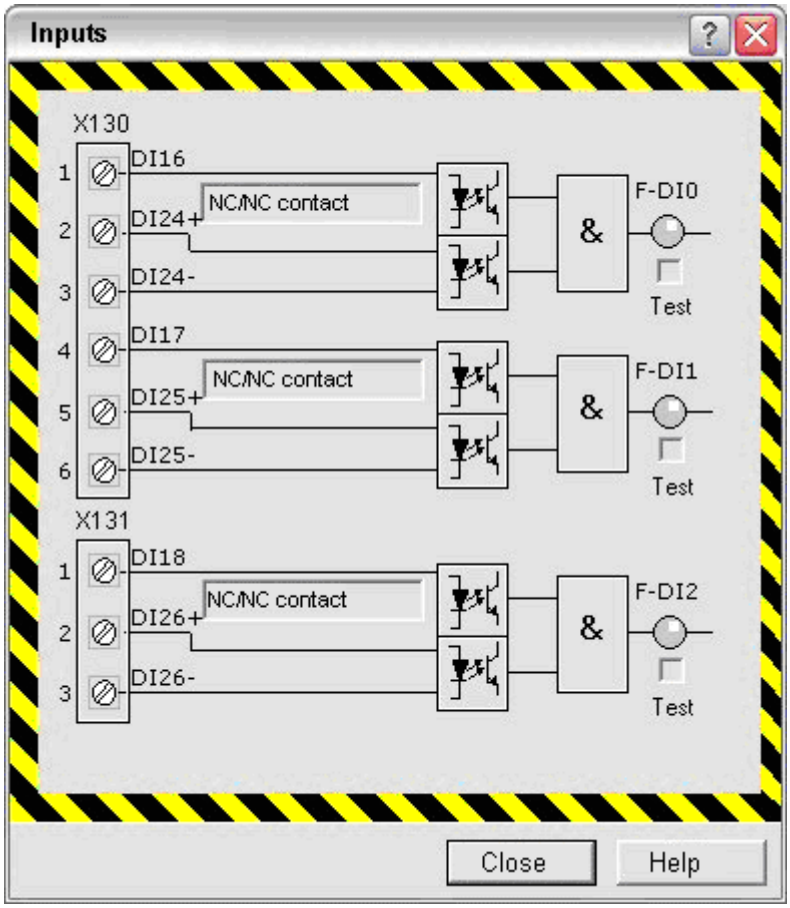

Figure 8-17 Inputs screen

NC/NC contact (p10040)

Terminal property F-DI 0-2 (p10040.0 = F-DI 0, ... p10040.2 = F-DI 2): Configure only the property of the second (lower) digital input. Always connect an NC contact to digital input 1 (upper). Digital input 2 can be configured as NO contact.

LED in F-DI screen

The LED downstream of the AND element indicates the logical state (inactive: gray, active: green, discrepancy error: red).

F-DO output screen

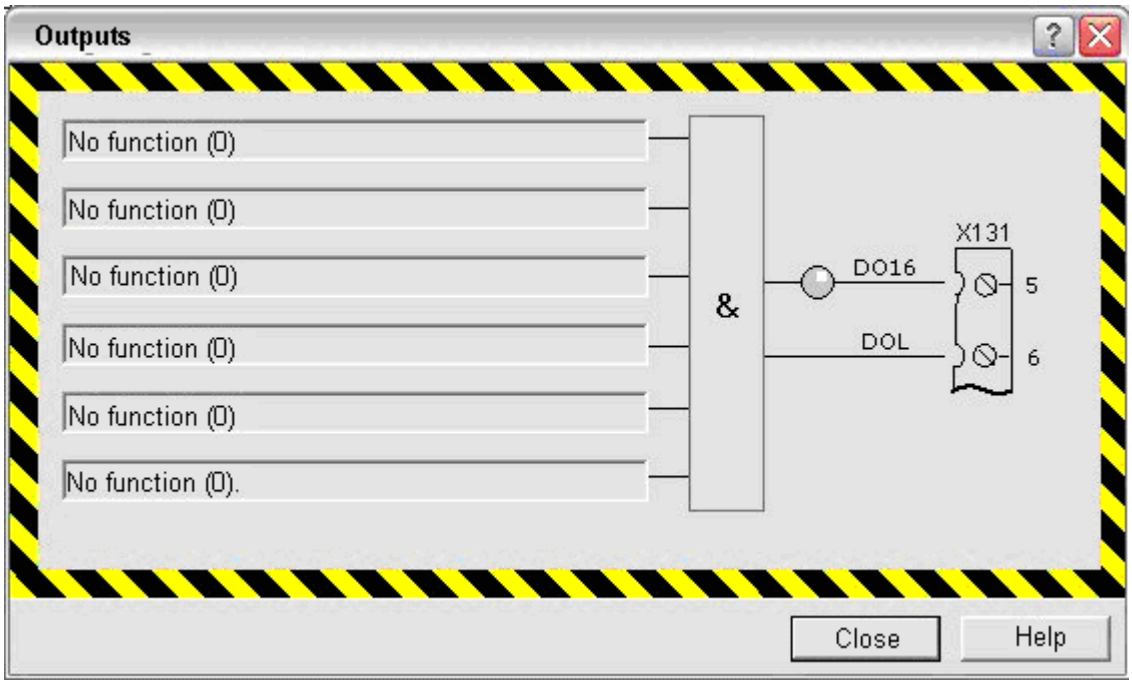

Figure 8-18 Output screen

Signal source for F-DO (p10042)

A six-way AND is connected downstream of the output terminal pair of the F-DO; the signal sources for the inputs of the AND can be selected:

- No signal source (input set to logical HIGH; default)
- Status signals of the drive

  For additional information on status signals, see chapter "F-DO overview" in the "Control using terminals" section.

LED in the F-DO output screen

The LED downstream of the AND element indicates the logical state (inactive: gray, active: green).

8.7.3.5 Control interface

Control interface screen

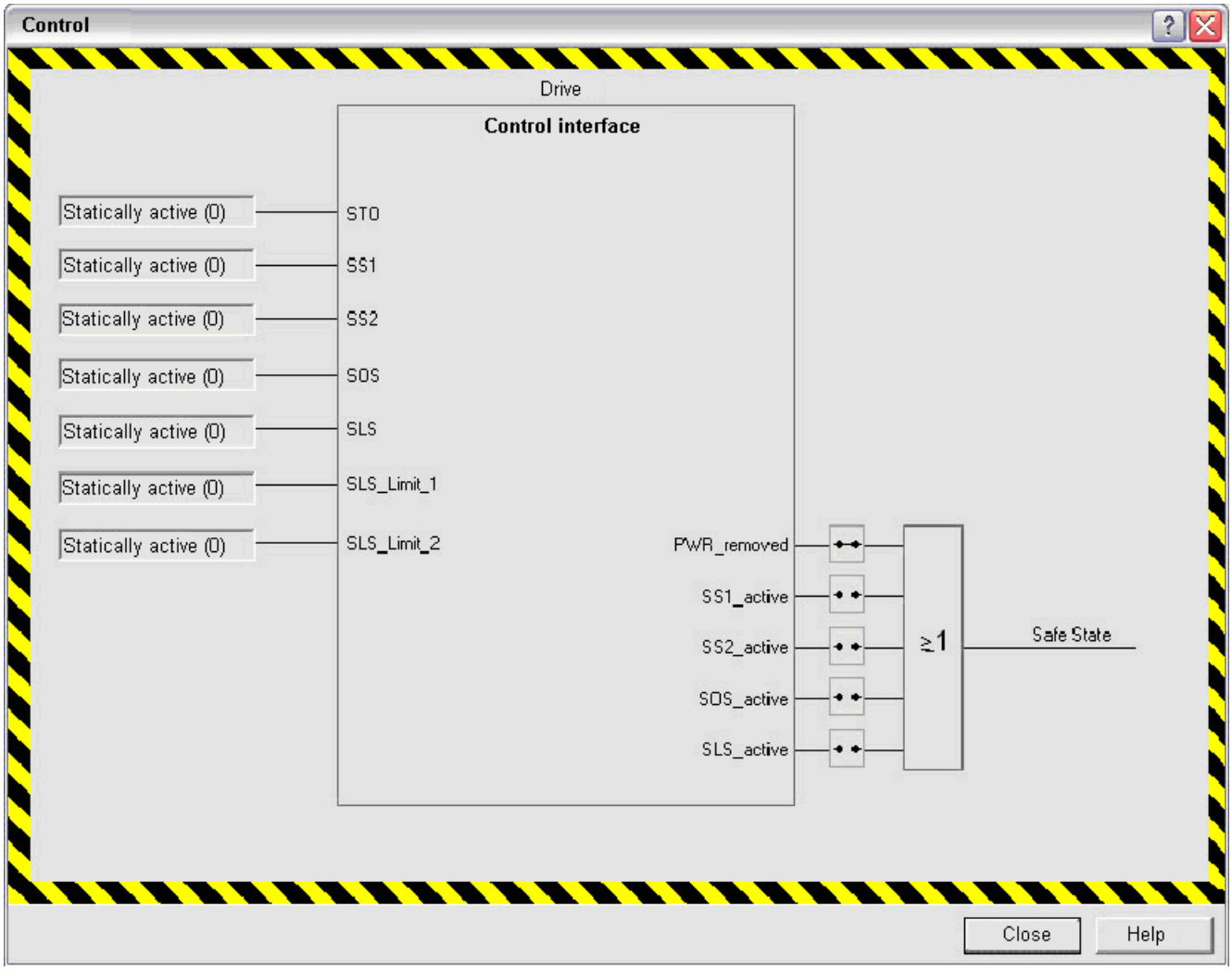

Figure 8-19 Control interface screen

Functions of this screen:

- Selection of an F-DI for the STO, SS1, SS2, SOS and SLS functions and for SLS speed limits (bit coded) (p10022 to p10028).

  An F-DI can be assigned several functions.
- Configuration of the "Safe State" signal (p10039)

  A failsafe output signal "Safe State" is generated based on the following status signals:
  - PWR_removed (STO active)
  - SS1 active
  - SS2 active
  - SOS active
  - SLS active

  The status signals of individual functions (PWR_removed, SS1 active etc.) are logically linked by OR operation.

8.7.4 Commissioning PROFIsafe via PROFIBUS

Example configuration

The next sections deal with a sample configuration of PROFIsafe communication between a SINAMICS S110 drive unit and higher-level SIMATIC F-CPU operating as PROFIBUS master.

The configuration and operation of failsafe communication (F communication) is based on the following software and hardware requirements:

Necessary software packages:

- STEP 7 V5.4 SP4
- S7 F Configuration Pack V5.5 SP3 or higher
- S7 Distributed Safety Programming V5.4 SP3 or higher
- STARTER V4.1.1 + Drive ES-Basic or SIMOTION SCOUT V4.1.1 HF6

Hardware:

- SIMATIC F-CPU e.g. CPU 317F-2

Topology (network view of the project)

Components participating in F communication via PROFIBUS are basically wired as follows:

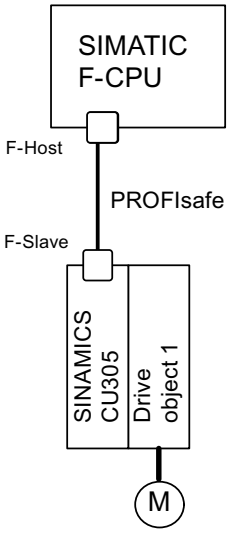

Figure 8-20 Example of a PROFIsafe topology

Configuring PROFIsafe communication

The next sections describe the configuration of PROFIsafe communication between a SIMATIC F-CPU and a drive unit. .

Create an F-CPU such as CPU 317F-2 and a SINAMICS S110 in HW Config in accordance with the hardware installed.

1. Set up the SINAMICS S110 for operation as a DP slave and the connected F-CPU as associated DP master.
2. In the DP slave properties, the PROFIsafe slots can be inserted by choosing "Insert object" on the "Configuration" tab and configured under "PROFIsafe".

3. The telegram configuration for F communication is displayed in the DP slave properties (SINAMICS S110), "Configuration" tab.

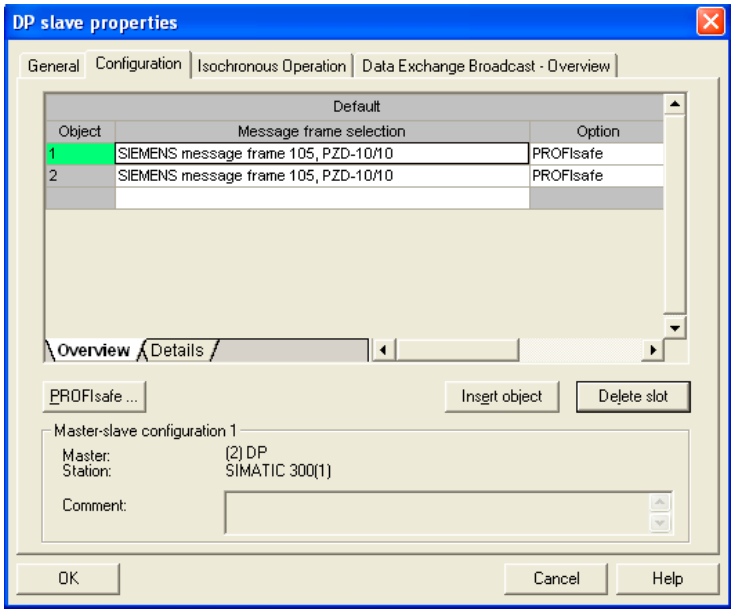

Figure 8-21 Example: PROFIsafe configuration (HW Config)

4. Double-click the icon of the SINAMICS drive unit and select the "Details" tab in the "Configuration" tab.
5. Click "PROFIsafe…" and then define the F parameters which are important to F communication.

Setting F parameters:

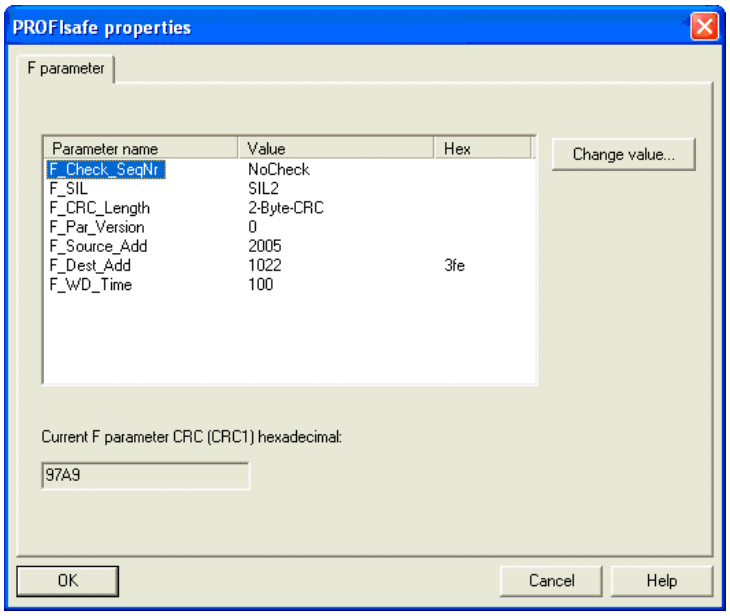

Figure 8-22 PROFIsafe properties (HW Config)

The top five failsafe parameters in this list are configured by default and cannot be edited. The following range of values is valid for the two remaining parameters:

F_Dest_Add: 1-65534
F_Dest_Add determines the PROFIsafe destination address of the drive object.
Any value within the range is allowed, however, it must be entered once again in the safety configuration of the drive in the SINAMICS drive unit. The F_Dest_Add value must be set in p9610 (Control Unit) and in p9810 (Power Module). You can handle these settings quite comfortably using the PROFIsafe STARTER screen (see the picture below). The PROFIsafe target address must be entered in hexadecimal format.

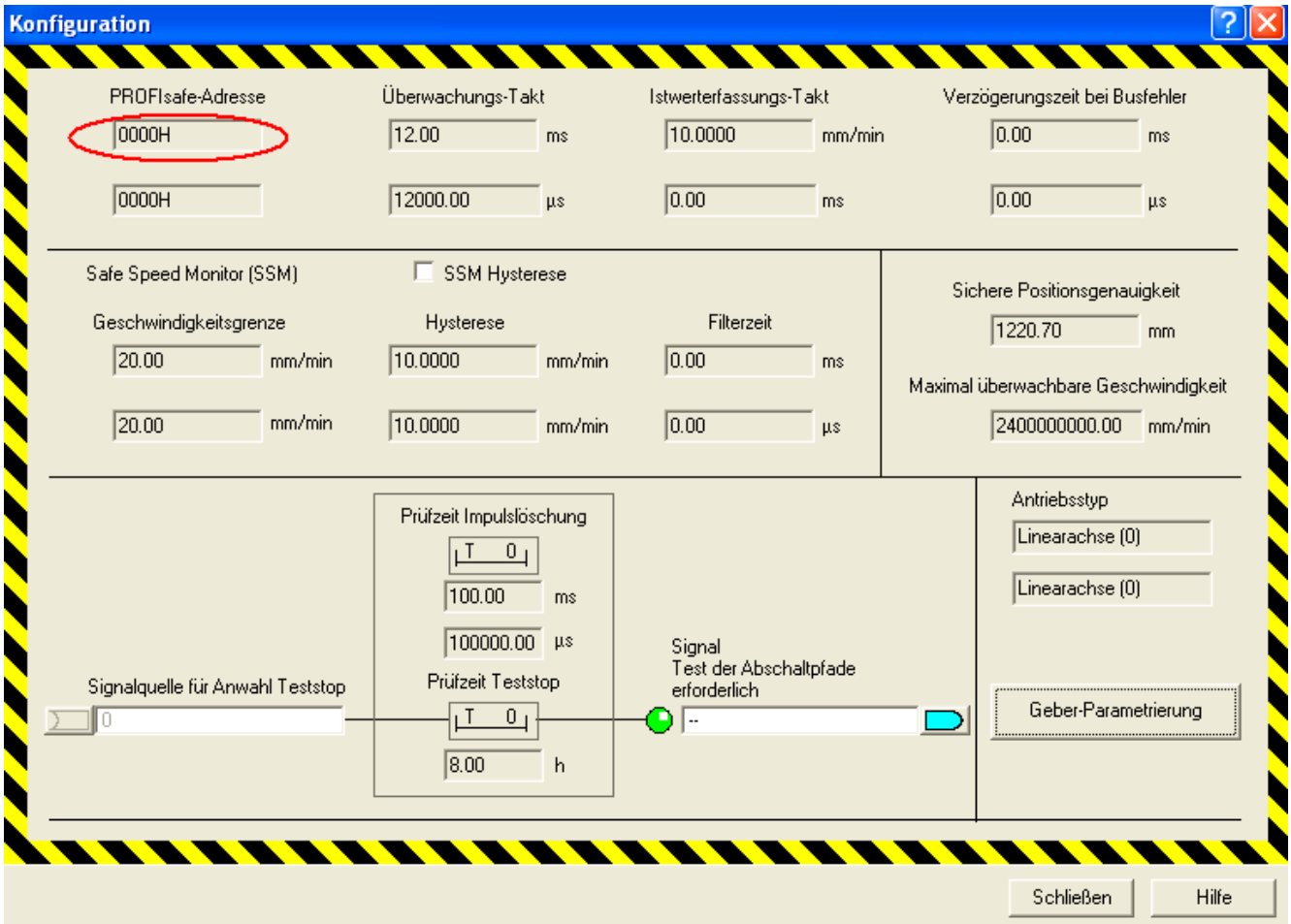

Figure 8-23 PROFIsafe STARTER configuration

F_WD_Time: 10- 65535
A valid current safety message frame must be received from the F-CPU within the monitoring time. The drive will otherwise go into safe state.
Select a monitoring time of sufficient length to let the communication functions tolerate message frame delays, however, make allowances for appropriate short fault reaction times (e.g. to interruption of communications).

For additional information on failsafe parameters, refer to the online help of the "PROFIsafe properties" dialog box ("Help" button).

Compile the F-CPU configuration data in HW Config.

8.7.5 Information pertaining to component replacements

Replacing components

⚠ WARNING
Observe the instructions with regard to changes to software components or to changes to these in the chapter "Safety instructions"!

1. The faulty component was replaced in accordance with safety regulations.
2. Make sure that everybody has cleared the danger zone and then power up the machine.
3. Error F30711 is output with fault value 1031 (data transfer error after replacement of a Sensor Module).
4. With STARTER:
   – Click "Acknowledge hardware replacement" in the start screen of safety functions.
5. Without STARTER:
   – Start the copying function for Node Identifier (p9700 = 1D hex)
   – Confirm the hardware CRC on the drive object (p9701 = EC hex)
6. Back up all parameters.
7. Perform a POWER ON at all components.
8. Faults F01650/F30650 (acceptance test required; see "Acceptance test and acceptance report") are output.
9. Before anyone is allowed to enter the danger zone again and before operation is resumed, select the STO function once and briefly move the drives affected by the component replacement in plus and minus direction (+/-) with activated safety monitoring function (SLS, if parameterized) in order to verify proper functionality.

8.7.6 Information pertaining to series commissioning

A commissioned project that has been uploaded to STARTER can be transferred to another drive unit including the existing safety parameterization.

1. Download the STARTER project to the drive unit.
2. The alarms F01650/F30650 (acceptance test required) are output.

   These fault alarms can be acknowledged because a full acceptance test is not required if no changes were made to safety function parameters.
3. Click "Acknowledge hardware replacement" in the start screen of the safety functions.
4. Save all parameters to the non-volatile memory.
5. Perform a POWER ON at all components.
6. Before anyone is allowed to enter the danger zone again and before operation is resumed, select the STO function once and briefly move the drives affected by the

component replacement in plus and minus direction (+/-) with activated safety monitoring function (SLS, if parameterized) in order to verify proper functionality.

8.8 Application examples

8.8.1 Input/output interconnections for a safety switching device with CU305

interconnecting F-DO with safe input on safety device

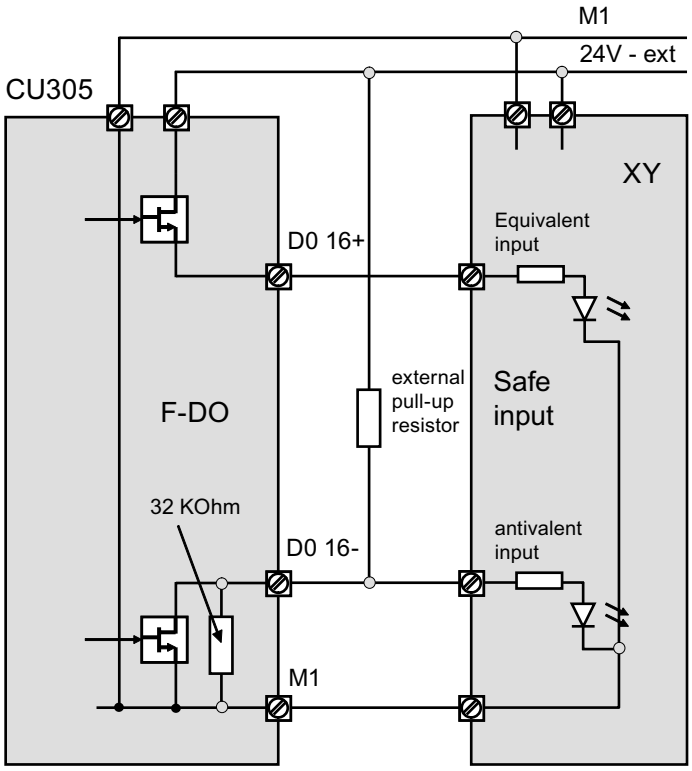

Figure 8-24 F-DO at equivalent/antivalent safe input on safety device XY (e.g. safety PLC)

interconnecting F-DI with plus-minus switching output on safety device

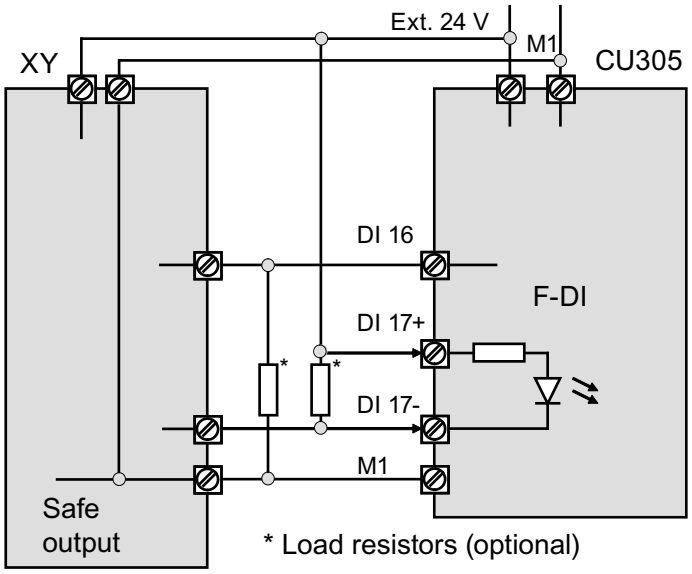

Figure 8-25 F-DI at plus-minus switching safe output on safety device XY (e.g. safety PLC)

Interconnecting F-DI with plus-plus switching output on safety device

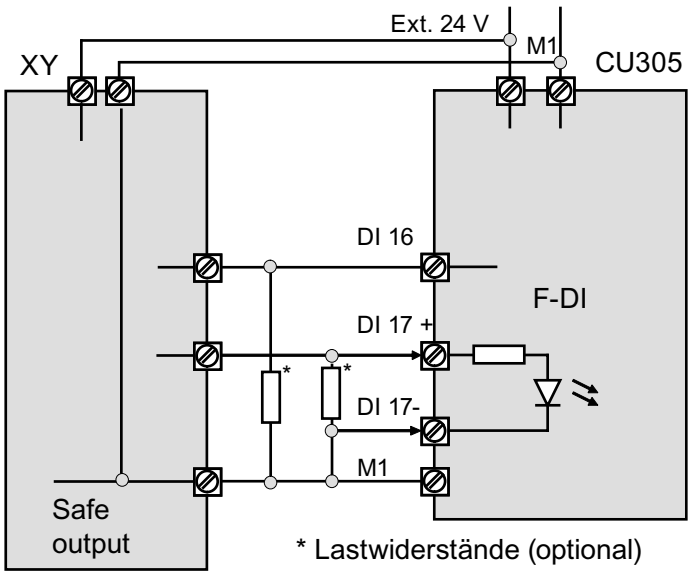

Figure 8-26 F-DI at plus-plus switching safe output on safety device XY (e.g. safety PLC)

8.8.2 Interconnection of F-DO with redundant contactors with positively driven auxiliary contacts

Interconnection of F-DO with redundant contactors with positively driven auxiliary contacts

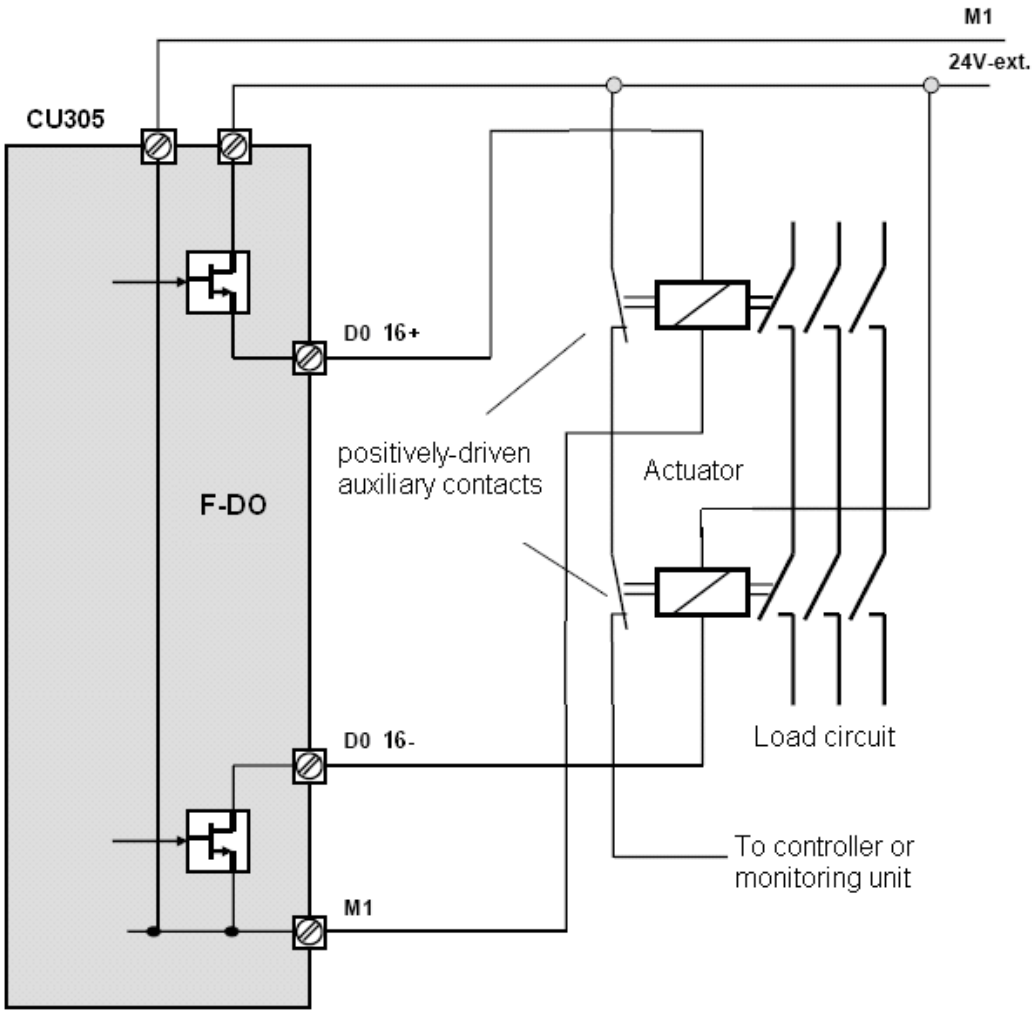

Figure 8-27 Interconnection of F-DO with redundant contactors with positively driven auxiliary contacts

8.9 Acceptance test and acceptance report

8.9.1 General information

Requirements regarding acceptance tests are derived from the EC Machinery Directive and ISO 13849-1. IEC 22G WG 10 is currently working on a "Functional safety" standard which includes a detailed description of acceptance test requirements. The machine manufacturer (OEM) is committed accordingly

- to carry out an acceptance test for safety-related functions and machine parts
- to issue an "Acceptance certificate" which describes the test results.

The acceptance test for systems with Safety Integrated Extended Functions (SI functions) is focused on validating the functionality of Safety Integrated monitoring and stop functions implemented in the drive system. The test objective is to verify proper implementation of the defined safety functions and of test mechanisms (forced dormant error detection measures) and to examine the response of specific monitoring functions to the explicit input of values outside tolerance limits. This has to be conducted for all drive-specific Safety Integrated motion monitoring procedures.

⚠ WARNING
A new acceptance test must be carried out if any changes were made to SI function parameters and must be logged in the acceptance report.

Note

The acceptance test is designed to ensure that the safety functions are correctly parameterized. The measured values (e.g. distance, time) and the system behavior identified (e.g. initiation of a specific stop) can be used for checking the plausibility of the configured safety functions. The objective of an acceptance test is to identify potential configuration errors or to record the valid configuration. The measured values are typical but no worst case values. They represent the behavior of the machine at the time of measurement. These measurements cannot be used, for example, to derive maximum ramp-down values.

Authorized person, acceptance report

The test of each SI function must be carried out by an authorized person and logged in the acceptance report. The report must be signed by the person who carried out the acceptance test. The acceptance report must be kept in the logbook of the relevant machine. Access rights to SI parameters must be protected by password and be recorded accordingly in the acceptance report. In this context this is a person who is authorized by the machine manufacturer and who has adequate professional training and knowledge of the safety functions in order to conduct the acceptance test in a proficient manner.

Note

- Observe the information in the chapter "Procedures for initial commissioning".
- The acceptance report presented below is both an example and recommendation.
- An acceptance report template in electronic format is available at your local sales office.

Necessity of an acceptance test

A complete acceptance test (as described in this chapter) is required after initial commissioning of Safety Integrated functionality on a machine. An acceptance test, possible with reduced scope, is always required after safety-related functions were extended, after the transfer of commissioned objects to other series machines, after changes were made to the hardware and after software upgrades. A summary of conditions which determine the necessary test scope or proposals in this context is provided below.

In order to define a partial acceptance test, it is necessary in the first instance to specify the acceptance test objects, and in the second instance to define logical groups which represent the elements of the acceptance test. The acceptance test must be carried out separately for each individual drive (as far as the machine allows).

Prerequisites for the acceptance test

- The machine is properly wired.
- All safety equipment such as protective door monitoring devices, light barriers or emergency-off switches are connected and ready for operation.
- Commissioning of the open-loop and closed-loop control should be concluded, as the ramp-down path may otherwise change as a result of changed dynamic response of the drive controller, for example. These include, for example:
  - Configuration of the setpoint channel
  - Position control in the higher-level controller
  - Drive control.

Information about the acceptance tests

Note

As far as possible, the acceptance tests are to be carried out at the maximum possible machine speed and acceleration rates to determine the maximum braking distances and stop times that can be expected.

Information on the acceptance test mode (p9370/p9570)

The acceptance test mode can be activated for a definable period (p9358/p9558) by setting the appropriate parameters (p9370/p9570). The acceptance test mode allows operation of the drive beyond SOS limits (p9331/p9531).

Activation of the acceptance test mode is therefore only useful during the testing of SOS and SLS functions.

The SOS can be selected either directly, or by way of SS2 (with deactivated acceptance test mode). Deactivate the SS2 brake ramp in SS2 state in active acceptance test mode in order to enable drive movements after having triggered a violation of standstill limits.

⚠ WARNING

If a speed setpoint that is not zero is present, the active stop function SS2 is set, and the motor is at a standstill (active SOS), the axis starts to move as soon as the acceptance test is activated.

Content of the complete acceptance test

Documentation

Documentation of the machine and of safety functions

1. Machine description (with overview)
2. Specification of the controller (if this exists)
3. Configuration diagram
4. Function table

   Active monitoring functions depending on the operating mode, the protective doors or other sensors This table should be the objective or result of the configuring work.
5. SI functions for each drive
6. Information about safety equipment

Function test Part 1

General function test, including a check of the wiring/programming

1. Test of shutdown paths

   (Test of forced dormant error detection at the inputs and outputs)
2. Testing stop functions SS1 and SS2
3. Test the forced checking procedure of the inputs and outputs
4. Test of the emergency stop function and of safety circuits
5. Changeover test of SI functions

Function test Part 2

Detailed function test and valuation of SI functions used.

1. Testing the SI function "Safe Operating Stop" (SOS)

   (with evaluated measurement diagram or measured values)
2. Test of the SI function "Safely Limited Speed" (SLS)

   (with evaluated measurement diagram or measured values)
3. Test of the SI function "Safe Speed Monitor" (SSM)

   (with evaluated measurement diagram or measured values)

Conclusion of the report

Report of the commissioning status tested and countersignatures

1. Inspection of SI parameters
2. Check that the existing safety firmware versions are permissible using the table under Siemens "Product Support" on the Internet (see "Safety Integrated firmware versions").
3. Logging of checksums (for each drive)
4. Assigning and logging the Safety password

   (do not disclose in the report!)
5. RAM to ROM backup and upload of project data to the STARTER and backup of the project
6. Countersignature

Appendix

Effect of the acceptance test on specific measures

Table 8- 13 Scope of the acceptance test depending on specific measures

Measure	Documentation	Function test Part 1	Function test Part 2	Conclusion of the report
Replacement of the encoder system	No	No	Test of failsafe actual value acquisition	Supplementation New checksums and countersignature as required
Replacement of an SMC/SME Module	Supplementation of hardware data/configuration/software version data	No	Test of failsafe actual value acquisition	Supplementation New checksums and countersignature
Replacement of a motor with DRIVE-CLiQ	Supplementation of hardware data/configuration/software version data	No	Test of failsafe actual value acquisition	Supplementation New checksums and countersignature
Replacing the Control Unit	Supplementation of hardware data/configuration/software version data	No	Partially, if the system scan cycle times or the dynamic response were changed (drive-specific)	Supplementation New checksums and countersignature as required
Replacing the Power Module or Safe Brake Relay	Supplementing hardware data/configuration	Yes	No	Supplementing and countersigning
Replacement of SI-relevant distributed I/O devices (e.g. EMERGENCY OFF switch)	Supplementation of hardware data/configuration/software version data	Yes, with comment restriction to replaced components	No	No
Firmware - upgrade (CU/Sensor Modules)	Supplementation Version data	Yes, including a note informing of the time of implementation of the new functionality	Yes, if the system scan cycle times or the dynamic response were changed or test of the new functionality	Supplementation New checksums and countersignature as required
Change to a single limit (e.g. SLS limit)	Supplementing the SI function	No	Partially, test of the changed limit	Supplementation New checksums and countersignature
Enhancement of functions (e.g. additional actuator, additional SLS stage)	Supplementing SI functions or function table	Yes, with note restriction to adapted parts as required	Partially, test of any additional limits	Supplementation New checksums and countersignature as required
Transfer of project data to other machines via series commissioning	Possibly supplement to the machine description (check of the firmware version)	Yes, with note	No, if no changes were made to SI parameters	No, if data are identical (check of checksums)

8.9.2 Safety logbook

Description

The "Safety Logbook" function is used to detect changes to safety parameters that affect the associated CRC sums. CRCs are only generated when p9601/p9801 (SI enable, functions integrated in the drive CU/Motor Module) is > 0.

Unauthorized data changes can be detected when the CRCs of the SI parameters have changed. Each SI parameter change that is to become active requires the reference CRC to be changed so that the drive can be operated without SI fault messages. The only exception here is when all SI functions are deactivated (p9601/p9801, bit 2=0). In addition to functional safety changes, safety changes as a result of hardware being replaced can be detected when the CRC has changed.

The following changes are recorded by the safety logbook:

- Functional changes are recorded in the checksum r9781[0]:
  - Functional CRCs of the motion monitoring functions (p9729[0]), axial (Extended Functions).
  - Functional CRCs of the basic safety functions integrated in the drive (p9799, SI reference checksum SI parameters CU), axial.
  - Enabling of functions integrated in the drive (p9601), axial (Basic and Extended Functions).
- Hardware-dependent changes are recorded in the checksum r9781[1]:
  - Hardware-dependent CRCs of the motion monitoring functions (p9729[2]), axial (ncSI, Basic and Extended Functions).

Overview of important parameters (see SINAMICS S110 List Manual)

- r9781[0] SI checksum to check changes (Control Unit), functional
- r9781[1] SI checksum to check changes (Control Unit), hardware dependent
- r9782[0] SI time stamp to check changes (Control Unit), functional
- r9782[1] SI time stamp to check changes (Control Unit), hardware dependent
- r9728[0...2] SI Motion actual checksum, SI parameters
- r9729[0...2] SI Motion reference checksum, SI parameters
- p9799 SI reference checksum SI parameters (Control Unit)
- p9601 SI enable, functions integrated in the drive (Control Unit)
- p9801 SI enable, functions integrated in the drive (Motor Module)

8.9.3 Acceptance report

8.9.3.1 Plant description - Documentation part 1

Table 8- 14 Machine description and overview diagram

Designation	
Type	
Serial number	
Manufacturer	
End customer	
Electrical drives	
Other drives	
Overview diagram of machine	

Table 8- 15 Values of relevant parameters

Versions of the firmware and of Safety Integrated		
Component	**FW version**	**SI version**
Parameters Control Unit	r0018 =	r9590 = r9770 =
Parameters Sensor Modules	**FW version**	**SI version**
	r0148 =	r9890 =
Monitoring clock cycles of Safety Integrated		
	SI monitoring clock cycle Control Unit	**SI monitoring clock cycle Power Module**
Basic Functions	r9780 =	r9880 =
	SI motion monitoring clock cycle Control Unit	**SI motion monitoring clock cycle Power Module**
Extended Functions	p9500 =	p9300 =
	SI motion actual value acquisition clock cycle Control Unit	**SI motion actual value acquisition clock cycle Power Module**
Extended Functions	p9511 =	p9311 =

8.9.3.2 Description of safety functions - Documentation Part 2

Introduction

This example contains the description of a plant; the settings for a specific plant must be adapted accordingly.

Function table (Example)

Table 8- 16 Example table: Active monitoring functions depending on the operating mode, the protective doors or other sensors

Mode of operation	Protective door	Drive	Status of monitoring functions
Production	closed and locked	1	All deselected
	unlocked	1	SOS selected
Setup	closed and locked	1	All deselected
	unlocked	1	SLS 1 selected
Emergency stop	-	1	SS1 selected

Comments: --

SI functions for the drive

Table 8- 17 Example: functional overview of the safety functions

Drive	SI function	Limit	active if
1	SOS (via on-board terminals)	100 mm	refer to the function table
1	SLS 1 (via on-board terminals)	50000 mm/min	refer to the function table
1	SS1 (via on-board terminals)	--	Emergency stop triggered

Comments: --

Drive-specific data

Table 8- 18 Drive-specific data (excerpt)

SI function	Parameter Power Modules / CU	Power Module value / CU value
Enable safety functions	p9301 / p9501	1001 bin
Axis type	p9302 / p9502	0
Encoder assignment	p9326 / p9526	1
Sensor Module node identifier	p9328[0..11]	xyz hex
Enable drive-integrated functions	p9801 / p9601	0100 bin
PROFIsafe address	p9810 / p9610	0003 hex
SOS standstill tolerance	p9330 / p9530	1.000°
PLC limit values	p9331[0..3] / p9531[0..3]	2000.00 mm/min
Actual value comparison tolerance	p9342 / p9542	0.1000°
SSM speed limit	p9346 / p9546	20.00 mm/min / 20.00 1/min
SBR actual speed tolerance	p9348 / p9548	300.00 1/min
STOP C -> SOS delay time	p9352 / p9552	100.00 ms
STOP D -> SOS delay time	p9353 / p9553	100.00 ms
STOP E -> SOS delay time	p9354 / p9554	100.00 ms
STOP F -> STOP A delay time	p9355 / p9555	0.00 ms
STOP F -> STOP B delay time	p9858 / p9658	0.00 µs
Safe Stop 1 delay time	p9852 / 9652	0.00 µs
Pulse suppression delay time	p9356 / p9556	100.00 ms
Acceptance test mode time limit	p9358 / p9558	40000.00 ms
PLC stop response	p9363[0..3] / p9563[0..3]	2
Acceptance test mode	p9370 / p9570	0000 hex
Acceptance test status	r9371 / r9571	0000 hex
...	...	...

Parameterizing the SI functions via safety terminals

Parameters for control via safety terminals

Table 8- 19 Parameters for control via safety terminals (excerpt)

SI function	Parameters	Value
Monitoring time discrepancy	p10002	12.00 ms
Forced dynamic behavior timer	p9559	8.00 h
SS1 input terminal	p10023	xy
SOS input terminal	p10025	xy
PLC input terminal	p10026	xy
F-DI input mode	p10040	xy
F-DO 0 signal sources	p10042	xy

Safety equipment

Protective door The protective door is unlocked by means of single-channel request key
Protective door switch The protective door is equipped with a safety door switch. The safety door switch returns the dual-channel signal "Door closed and locked". Changeover and selection of safety functions in accordance with the table shown above.
Mode selector switch The "Production" and "Setup" modes are set by means of a mode selector switch. The key switch features two contact levels. Changeover and selection of safety functions in accordance with the table shown above.
EMERGENCY-STOP pushbutton The dual-channel EMERGENCY-STOP pushbuttons are wired in series. The EMERGENCY-STOP signal activates SS1, then the external brakes and the STO are activated.
Test stop Activation by means of: • Machine power on • Unlocking the protective door

8.9.4 Acceptance tests

Information about the acceptance tests

Note

As far as possible, the acceptance tests are to be carried out at the maximum possible machine speed and acceleration rates to determine the maximum braking distances and stop times that can be expected.

8.9.4.1 Acceptance test for Safe Torque Off (STO)

"Safe Torque Off" (STO) function

This test comprises the following steps:

Table 8- 20 "Safe Torque Off" (STO) function

No.	Description	Status
1.	Initial state	
	Drive in "Ready" status (p0010 = 0)	
	STO function enabled (p9601.0 = 1, p9801.0 = 1)	
	No safety faults and alarms (r0945, r2122, r2132)	

No.	Description	Status
	r9772.0 = r9772.1 = 0 (STO deselected and inactive – CU)	
	r9872.0 = r9872.1 = 0 (STO deselected and inactive – PM)	
	r9773.0 = r9773.1 = 0 (STO deselected and inactive – drive)	
	When terminals are grouped for "Safe Torque Off": r9774.0 = r9774.1 = 0 (STO deselected and inactive - group)	
2.	Run the drive	
3.	Ensure that the correct drive is running	
4.	Select STO when issuing the traversing command	
Note: The acceptance test must be conducted for each configured control which can be set, for example, by way of safety terminals or PROFIsafe.		
5.	Check the following:	
	• The drive coasts to a standstill or is braked and stopped by the mechanical brake (if available and configured (p1215, p9602, p9802)).	
	• No safety faults and alarms (r0945, r2122, r2132)	
	• r9772.0 = r9772.1 = 1 (STO selected and active – CU)	
	• r9872.0 = r9872.1 = 1 (STO selected and active – PM)	
	• r9773.0 = r9773.1 = 1 (STO selected and active – drive)	
	• When terminals are grouped for "Safe Torque Off": r9774.0 = r9774.1 = 1 (STO selected and active - group)	
6.	Deselect STO	
7.	Check the following:	
	• No safety faults and alarms (r0945, r2122, r2132)	
	• r9772.0 = r9772.1 = 0 (STO deselected and inactive – CU)	
	• r9872.0 = r9872.1 = 0 (STO deselected and inactive – PM)	
	• r9773.0 = r9773.1 = 0 (STO deselected and inactive – drive)	
	• When terminals are grouped for "Safe Torque Off": r9774.0 = r9774.1 = 0 (STO deselected and inactive - group)	
	• r0046.0 = 1 (drive in "Switching on inhibited" state)	
8.	Acknowledge "Switching on inhibited" and run the drive	
9.	Ensure that the correct drive is running	
	The following is tested: • Correct connection between Control Unit and Power Module • Correct assignment of drive number – Power Module – motor • The hardware is functioning properly • The switch-off signal paths are wired correctly • Correct assignment of the terminals for STO on the Control Unit • Correct STO grouping (if available) • Correct parameterization of the STO function • Routine for forced dormant error detection of the switch-off signal paths	

8.9.4.2 Acceptance test for Safe Stop 1, time controlled (SS1)

"Safe Stop 1" function (SS1, time-controlled)

This test comprises the following steps:

Table 8- 21 "Safe Stop 1" function (SS1)

No.	Description	Status
1.	Initial state	
	Drive in "Ready" status (p0010 = 0)	
	STO function enabled (p9601.0 = 1, p9801.0 = 1)	
	Enable SS1 function (p9652 > 0, p9852 > 0)	
	No safety faults and alarms (r0945, r2122, r2132)	
	r9772.0 = r9772.1 = 0 (STO deselected and inactive – CU)	
	r9872.0 = r9872.1 = 0 (STO deselected and inactive – MM)	
	r9773.0 = r9773.1 = 0 (STO deselected and inactive – drive)	
	r9772.2 = r9872.2 = 0 (SS1 not requested – CU and MM)	
	When terminals are grouped for "Safe Torque Off": r9774.0 = r9774.1 = 0 (STO deselected and inactive - group)	
2.	Run the drive	
3.	Ensure that the correct drive is running	
4.	Select SS1 when the run command is issued	
Note: The acceptance test must be conducted for each configured control individually, either via terminals or PROFIsafe.		
5.	Check the following:	
	• The drive is braked along the OFF3 ramp (p1135)	
	Before the SS1 delay time (p9652, p9852) expires, the following applies:	
	• r9772.0 = r9772.1 = 0 (STO deselected and inactive - CU)	
	• r9872.0 = r9872.1 = 0 (STO deselected and inactive – MM)	
	• r9772.2 = r9872.2 = 1 (SS1 active – CU and MM)	
	• r9773.0 = r9773.1 = 0 (STO deselected and inactive - drive)	
	• r9773.2 = 1 (SS1 active – drive)	
	STO is initiated after the SS1 delay time expires (p9652, p9852).	
	• No safety faults and alarms (r0945, r2122, r2132)	
	• r9772.0 = r9772.1 = 1 (STO selected and active - CU)	
	• r9872.0 = r9872.1 = 1 (STO selected and active – MM)	
	• r9772.2 = r9872.2 = 0 (SS1 inactive – CU and MM)	
	• r9773.0 = r9773.1 = 1 (STO selected and active – drive)	
	• r9773.2 = 0 (SS1 inactive – drive)	
6.	Canceling SS1	
7.	Check the following:	

No.	Description	Status
	• No safety faults and alarms (r0945, r2122, r2132)	
	• r9772.0 = r9772.1 = 0 (STO deselected and inactive - CU)	
	• r9872.0 = r9872.1 = 0 (STO deselected and inactive – MM)	
	• r9772.2 = r9872.2 = 0 (SS1 inactive – CU and MM)	
	• r9773.0 = r9773.1 = 0 (STO deselected and inactive - drive)	
	• r9773.2 = 0 (SS1 inactive – drive)	
	• r0046.0 = 1 (drive in "Switching on inhibited" state)	
8.	Acknowledge "Switching on inhibited" and run the drive	
9.	Ensure that the correct drive is running	
	The following is tested: • Correct parameterization of the SS1 function	

8.9.4.3 Acceptance test for "Safe Brake Control" (SBC)

"Safe Brake Control" function (SBC)

This test comprises the following steps:

Table 8- 22 "Safe brake control" (SBC) function

No.	Description	Status
1.	Initial state	
	• Drive in "Ready" status (p0010 = 0)	
	• STO function enabled (p9601.0 = 1, p9801.0 = 1)	
	• Enable SBC function (p9602 = 1, p9802 = 1)	
	• Vertical axis: Brake as in sequential control (p1215 = 1) • No vertical axis: Brake always released (p1215 = 2)	
	• Vertical axis: Mechanical brake is applied • No vertical axis: Mechanical brake is released	
	• No safety faults or alarms (r0945, r2122)	
	• r9772.0 = r9772.1 = 0 (STO deselected and inactive – CU)	
	• r9872.0 = r9872.1 = 0 (STO deselected and inactive – MM)	
	• r9773.0 = r9773.1 = 0 (STO deselected and inactive – drive)	
	• r9772.4 = r9872.4 = 0 (SBC not requested – CU and MM)	
2.	Run drive (applied brake is released)	
3.	Ensure that the correct drive is running	

No.	Description	Status
4.	Select STO/SS1 during the traversing command.	
Note: The acceptance test must be conducted for each configured control individually, either via terminals or PROFIsafe.		
5.	Check the following: • Drive is braked and stopped by the mechanical brake. • No safety faults or alarms (r0945, r2122) • r9772.0 = r9772.1 = 1 (STO selected and active – CU) • r9872.0 = r9872.1 = 1 (STO selected and active – MM) • r9773.0 = r9773.1 = 1 (STO selected and active – drive) • r9772.4 = r9872.4 = 1 (SBC requested – CU and MM)	
6.	Deselect STO	
7.	Check the following:	
	• Vertical axis: Mechanical brake remains applied • No vertical axis: Mechanical brake is released • No safety faults or alarms (r0945, r2122)	
	• r9772.0 = r9772.1 = 0 (STO deselected and inactive – CU)	
	• r9872.0 = r9872.1 = 0 (STO deselected and inactive – MM)	
	• r9773.0 = r9773.1 = 0 (STO deselected and inactive – drive)	
	• r9772.4 = r9872.4 = 0 (SBC not requested – CU and MM)	
	• r0046.0 = 1 (drive in "Switching on inhibited" state)	
8.	Acknowledge "Switching on inhibited" and run the drive (vertical axis: mechanical brake is released)	
9.	Ensure that the correct drive is running	
	The following is tested: • The brake is connected properly • The hardware is functioning properly • The SBC is parameterized correctly • Routine for the forced dormant error detection of the brake control	

8.9.4.4 Acceptance test for Safe Stop 1, time and acceleration controlled

"Safe Stop 1" function (SS1, time and acceleration controlled)

Note

As far as possible, the acceptance tests are to be carried out at the maximum possible machine speed and acceleration rates to determine the maximum braking distances and stop times that can be expected.

This test comprises the following steps:

Table 8- 23 "Safe Stop 1" function (SS1)

No.	Description	Status
1.	Initial state	
	• Drive in "Ready" status (p0010 = 0)	
	• Safety Integrated Extended Functions enabled (p9601.2 = 1)	
	• SOS/SLS function enabled (p9501.0 = 1)	
	• No safety alarm (r0945, r2122, r9747)	
2.	Run the drive	
3.	Ensure that the correct drive is running	
4.	Start Trace (trigger r9720.1 = 0) Trace recording of the following values: • Safe actual speed (r9714) • SS1 deactivation (r9720.1) • STO active (r9722.0) • SS1 active (r9722.1)	
5.	Select SS1 while the drive is moving	
Note: The acceptance test must be conducted for each configured control which can be set, for example, by way of safety terminals or PROFIsafe.		
6.	The drive must decelerate to the standstill limit	
7.	Save / print the Trace (refer to the example below)	
8.	Canceling SS1	
9.	Acknowledge "Switching on inhibited" and run the drive	
10.	Ensure that the correct drive is running	

Example of the Trace

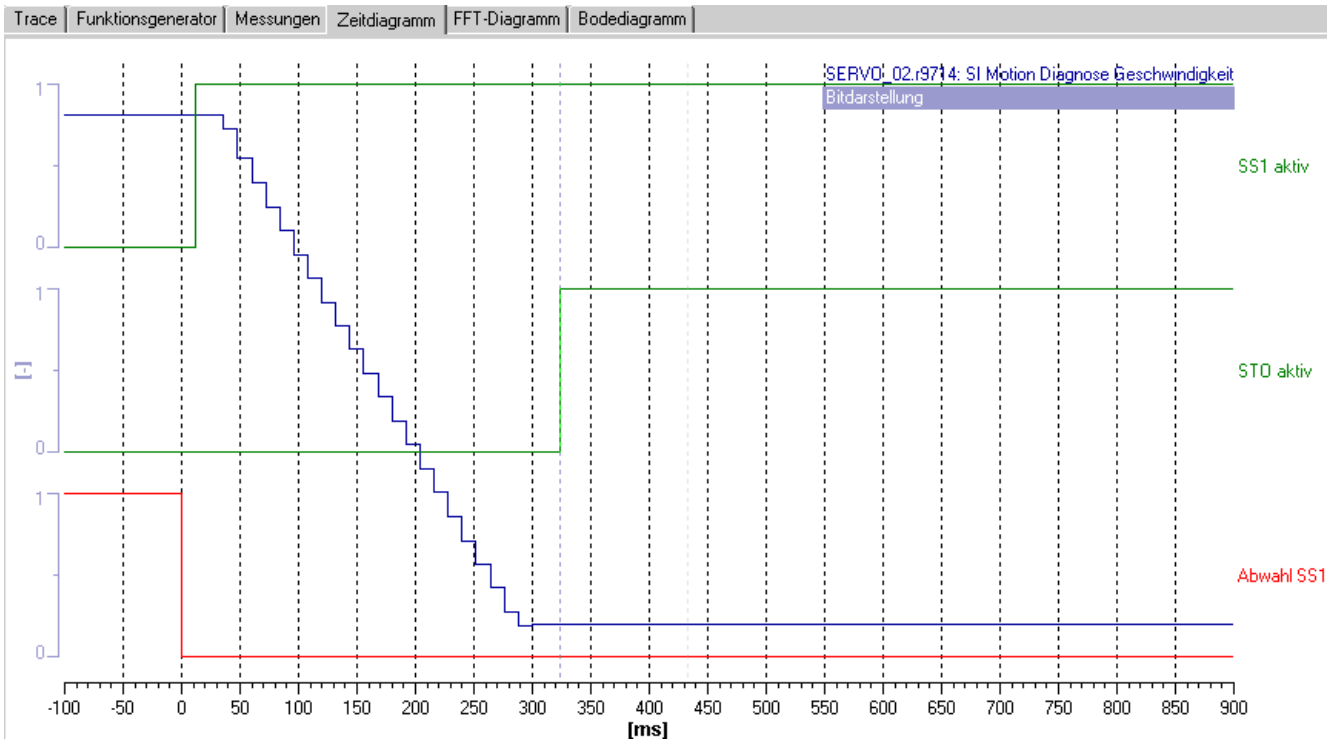

Figure 8-28 Example Trace SS1

8.9.4.5 Acceptance test for Safe Stop 2 (SS2)

"Safe Stop 2" function (SS2)

The test comprises the following steps:

Table 8- 24 "Safe Stop 2" function (SS2)

No.	Description	Status
1.	Initial state	
	• Drive in "Ready" status (p0010 = 0)	
	• Safety Integrated Extended Functions enabled (p9601.2 = 1)	
	• SOS/SLS function enabled (p9501.0 = 1)	
	• No safety alarm (r0945, r2122, r9747)	
2.	Run the drive	
3.	Ensure that the correct drive is running	
4.	Start Trace (trigger SS2 selected r9720.2 = 0) Trace recording of the following values: • Safe actual speed (r9714) • SS2 deactivation (r9720.2) • SS2 active (r9722.2) • SOS active (r9722.3)	
5.	Select SS2 while the drive is moving	
Note: The acceptance test must be conducted for each configured control individually, either via terminals or PROFIsafe.		
6.	The drive must decelerate to the standstill limit	
7.	Save / print the Trace (refer to the example below)	
8.	SS2 deactivated	
9.	Drive returns to the setpoint	

Example of the Trace

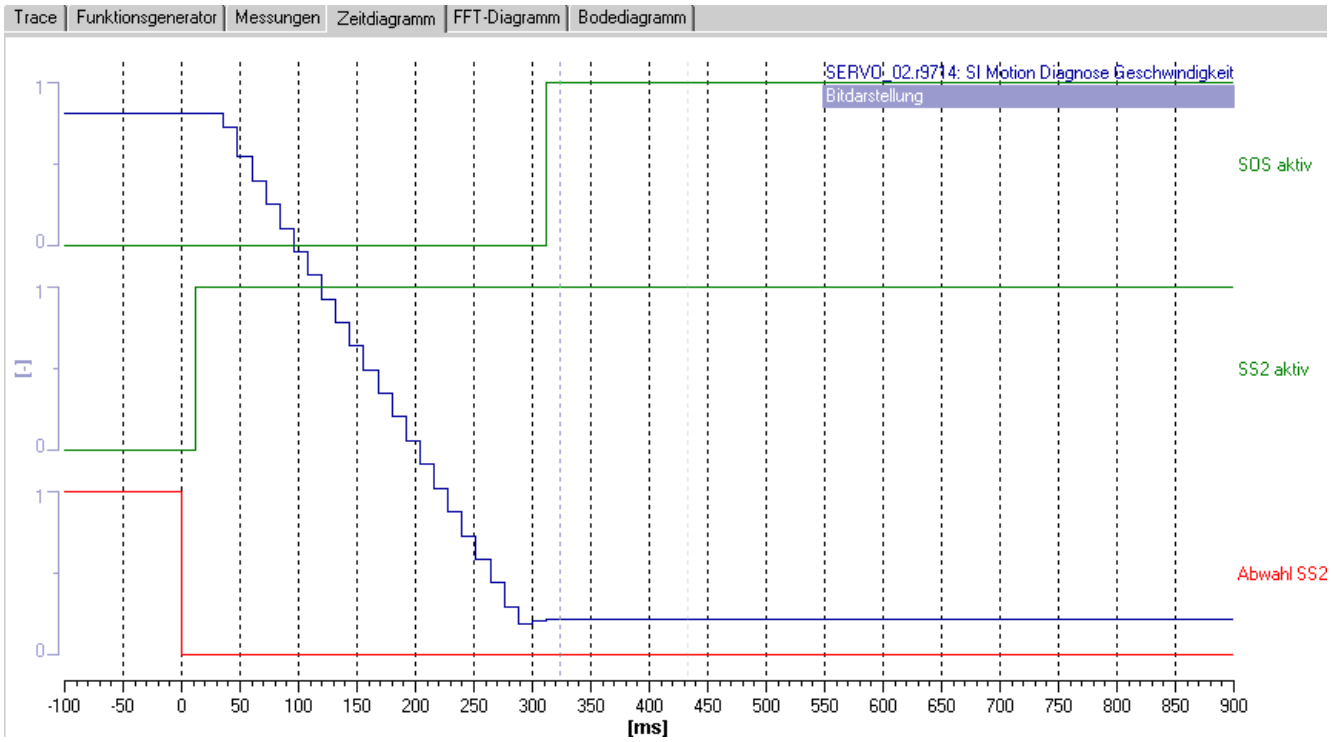

Figure 8-29 Example Trace SS2

8.9.4.6 Acceptance test for Safe Operating Stop (SOS)

"Safe Operating Stop" (SOS) function

Note

As far as possible, the acceptance tests are to be carried out at the maximum possible machine speed and acceleration rates to determine the maximum braking distances and stop times that can be expected.

The test comprises the following steps:

Table 8- 25 "Safe Operating Stop" (SOS) function

No.	Description	Status
1.	Initial state	
	• Drive in "Ready" status (p0010 = 0)	
	• Safety Integrated Extended Functions enabled (p9601.2 = 1)	
	• SOS/SLS function enabled (p9501.0 = 1)	
	• No safety alarm (r0945, r2122, r9747)	
2.	Activation of the acceptance test mode by means of p9370 = p9570 = 00AC (hex)	
3.	Deactivate any speed setpoint limit in the higher-level controller	
4.	Start trace (STO trigger active) Trace recording of the following values: • Safe actual position value (r9713[0/1]) • STOP A or B active (r9721.12) • STO selected and active (r9721.0) • SOS selected and active (r9722.3)	
5.	Run the drive beyond the standstill limit set in p9330/p9530	
6.	The drive must decelerate to the standstill limit	
7.	Save / print the Trace (refer to the example below)	
8.	Deactivation of the acceptance test mode by means of p9370 = p9570 = 0000 (hex)	

Example of the Trace

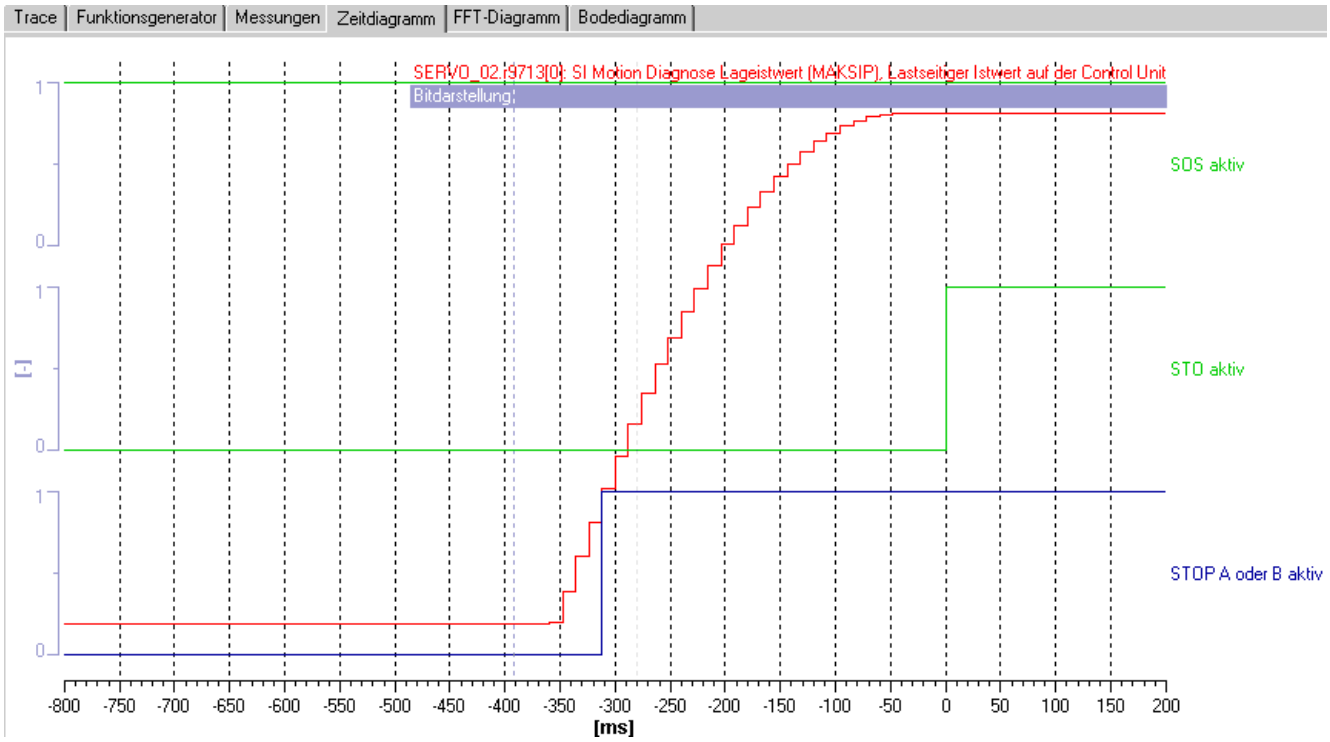

Figure 8-30 Example Trace SOS

8.9.4.7 Acceptance test for Safely Limited Speed (SLS)

"Safely Limited Speed" (SLS) function

The functional test must be carried out separately for each SLS speed limit used.

The test comprises the following steps:

Table 8- 26 "Safely Limited Speed" (SLS) function

No.	Description	Status
1.	Initial state	
	• Drive in "Ready" status (p0010 = 0)	
	• Safety Integrated Extended Functions enabled (p9601.2 = 1)	
	• SOS/SLS function enabled (p9501.0 = 1)	
	• No safety alarm (r0945, r2122, r9747)	
2.	Activation of the acceptance test mode by means of p9370 = p9570 = 00AC (hex)	
3.	Deactivate any speed setpoint limit in the higher-level controller	
4.	Start Trace (trigger r9722.7 = 1/0 edge) Trace recording of the following values: • Safe actual speed (r9714) • Parameterized STOP x active (r9721.13) • SOS selected and active (r9722.3) • SLS selected and active (r9722.4)	
5.	Operate the drive above the speed limit set in p9331/p9531, triggered by the parameterized stop function	
6.	The drive must decelerate to the standstill limit	
7.	Save / print the Trace (refer to the example below)	
8.	Deactivation of the acceptance test mode by means of p9370 = p9570 = 0000 (hex)	

Example of the Trace

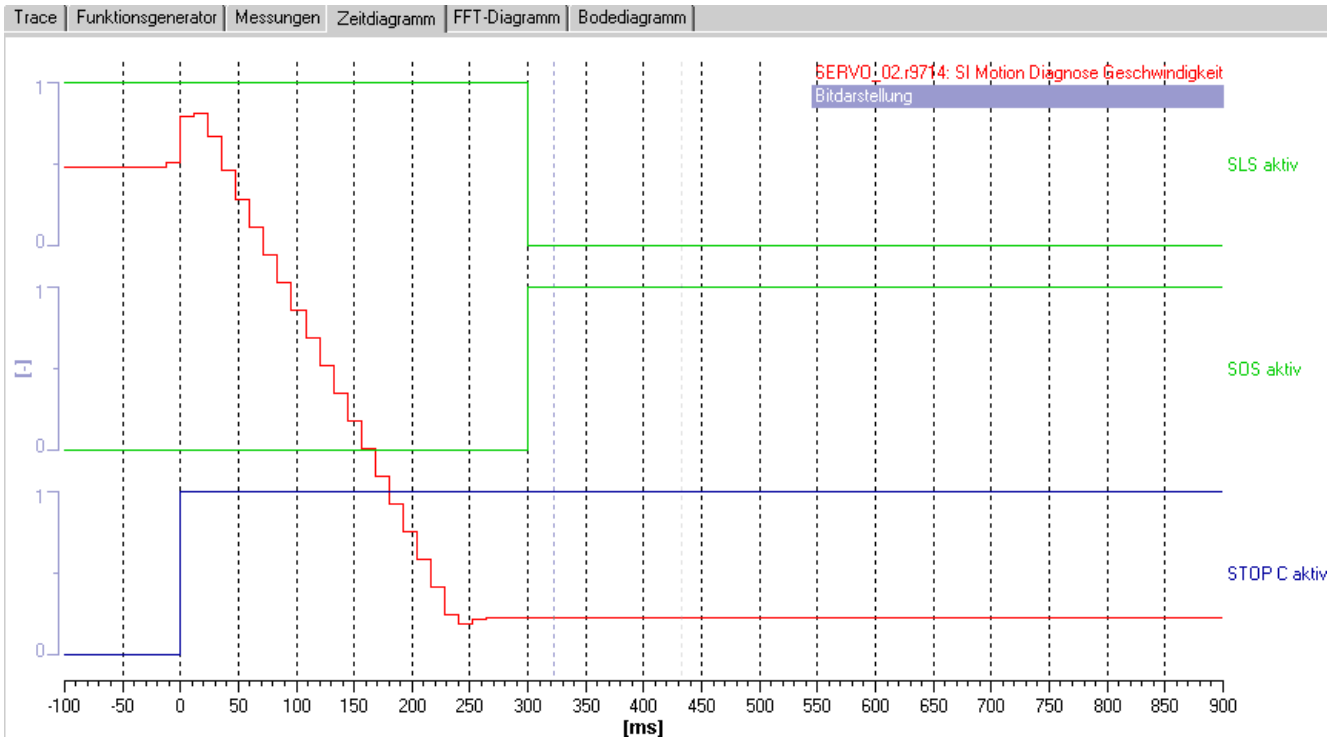

Figure 8-31 Example Trace SLS

8.9.4.8 Acceptance test for Safe Speed Monitor (SSM)

"Safe Speed Monitor" (SSM) function

The test comprises the following steps:

Table 8- 27 "Safe Speed Monitor" (SSM) function

No.	Description	Status
1.	Initial state	
	• Drive in "Ready" status (p0010 = 0)	
	• Safety Integrated Extended Functions enabled (p9601.2 = 1)	
	• SOS/SLS function enabled (p9501.0 = 1)	
	• No safety alarm (r0945, r2122, r9747)	
2.	Start Trace (trigger r9722.15 = 1/0 edge) Trace recording of the following values: • Safe actual speed (r9714) • SSM (n below limit) r9722.15	
3.	Operate the drive above the speed limit set in p9346/p9546 plus the hysteresis set in p9347/p9547	
4.	Operate the drive below the speed limit set in p9346/p9546 minus the hysteresis set in p9347/p9547	
5.	Save / print the Trace (refer to the example below)	

Example of the Trace

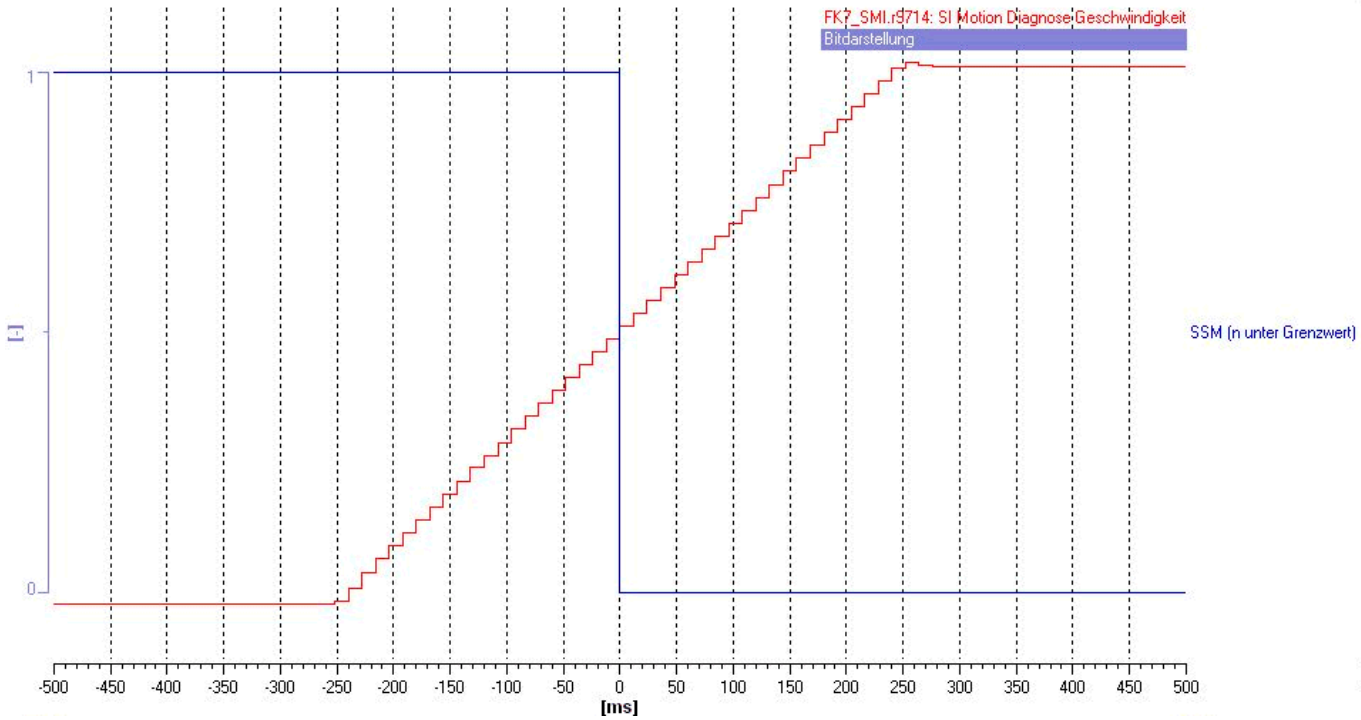

Figure 8-32 Example Trace SSM

8.9.5 Completion of certificate

SI parameters

	Specified values checked? (check)	
	Yes	No
Control Unit		
Power Module		

Checksums

Drive		Checksum (8 hex)	
Name	Drive number	Control Unit (p9798)	Power Module (p9898)

Safety logbook

	Functional	Hardware components
Checksums	r9781[0] =	r9781[1] =
Time stamp	r9782[0] =	r9782[1] =

Data backup

	Storage medium			Storage location
	Type	Designation	Date	
Parameter				
PLC program				
Circuit diagrams				

Countersignatures

Commissioning engineer

This confirms that the tests and checks have been carried out properly.

Date	Name	Company/dept.	Signature

Machine manufacturer

This confirms that the parameters recorded above are correct.

Date	Name	Company/dept.	Signature

Communication PROFIBUS DP 9

9.1 Communication according to PROFIdrive

9.1.1 General information about PROFIdrive for SINAMICS

General information

PROFIdrive V4.1 is the PROFIBUS profile for drive technology with a wide range of applications in production and process automation systems.

Note

PROFIdrive for drive technology is standardized and described in the following document:

References: /P5/ PROFIdrive Profile Drive Technology

Controller, Supervisor, and Drive Unit

- Properties of the Controller, Supervisor, and Drive Unit

Table 9- 1 Properties of the Controller, Supervisor, and Drive Unit

Properties	Controller, Supervisor	Drive Unit
As bus node	Active	Passive
Send messages	Permitted without external request	Only possible on request by master
Receive messages	Possible with no restrictions	Only receive and acknowledge permitted

- Controller (PROFIBUS: Master Class 1)

  This is typically a higher-level control in which the automation program runs.

  Example: SIMATIC S7 and SIMOTION

- Supervisor (PROFIBUS: Master Class 2)

  Devices for configuration, commissioning, operator control and monitoring during bus operation. Devices that only non-cyclically exchange data with Drive Units and Controllers.

  Examples: Programming devices, human machine interfaces

- Drive Unit (PROFIBUS: slave)

  The SINAMICS drive unit is with reference to PROFIdrive, a Drive Unit.

9.1.2 Application classes

Description

There are different application classes for PROFIdrive, depending on the scope and type of the application processes. There are a total of 6 application classes in PROFIdrive, of which 4 are discussed here.

Application class 1 (standard drive)

In the most basic case, the drive is controlled via a speed setpoint by means of PROFIBUS. In this case, speed control is fully handled in the drive controller. Typical application examples are basic frequency converters. Pump and fan control.

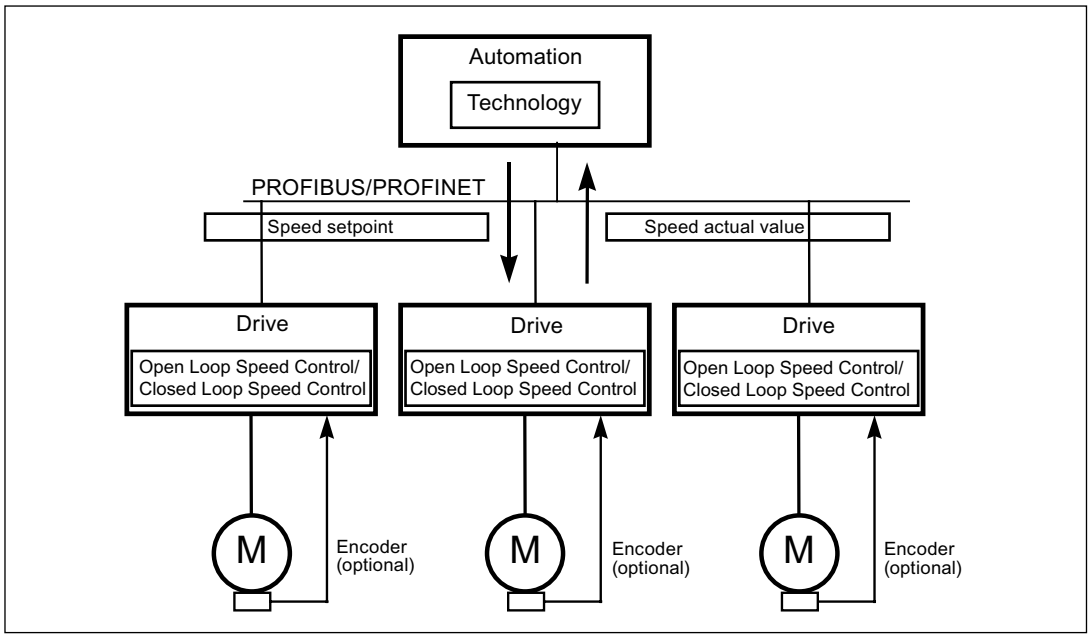

Figure 9-1 Application class 1

Application class 2 (standard drive with technology function)

The total process is subdivided into a number of small subprocesses and distributed among the drives. This means that the automation functions no longer reside exclusively in the central automation device but are also distributed in the drive controllers.
Of course, this distribution assumes that communication is possible in every direction, i.e. also cross-communication between the technology functions of the individual drive controllers. Specific applications include e.g. setpoint cascades, winders and speed synchronization applications for continuous processes with a continuous web.

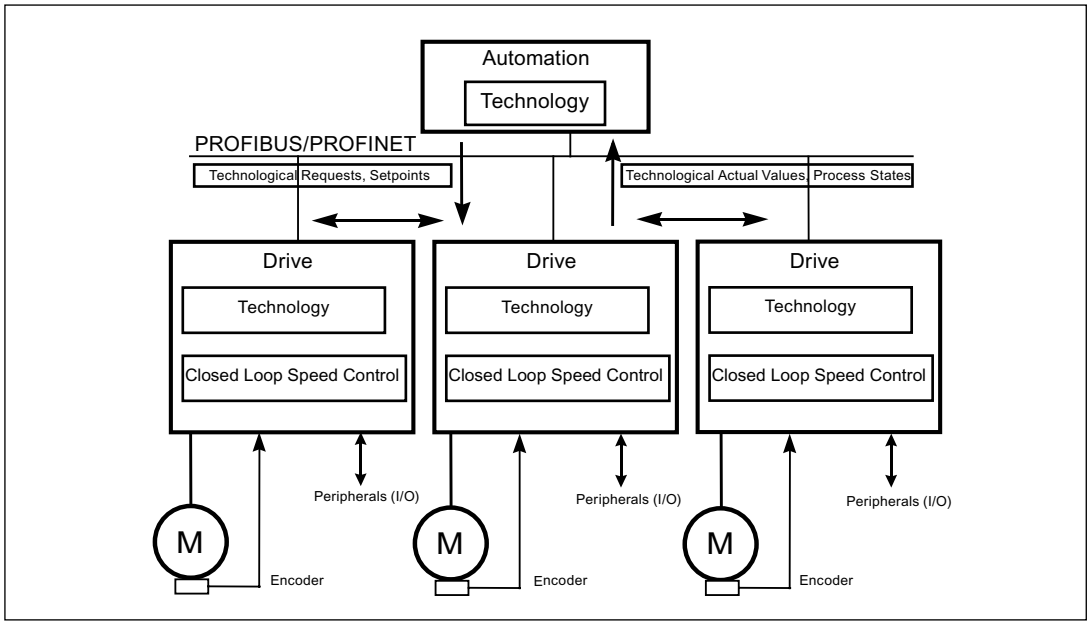

Figure 9-2 Application class 2

Application class 3 (positioning drive)

In addition to the drive control, the drive also includes a positioning control, so that the drive operates as an autonomous basic positioning drive, while the higher-level technological processes are executed on the controller. Positioning requests are transmitted to the drive controller via PROFIBUS and launched. Positioning drives have a very wide range of applications, e.g. the screwing and unscrewing of caps in a bottle filling plant or the positioning of cutters on a film cutting machine.

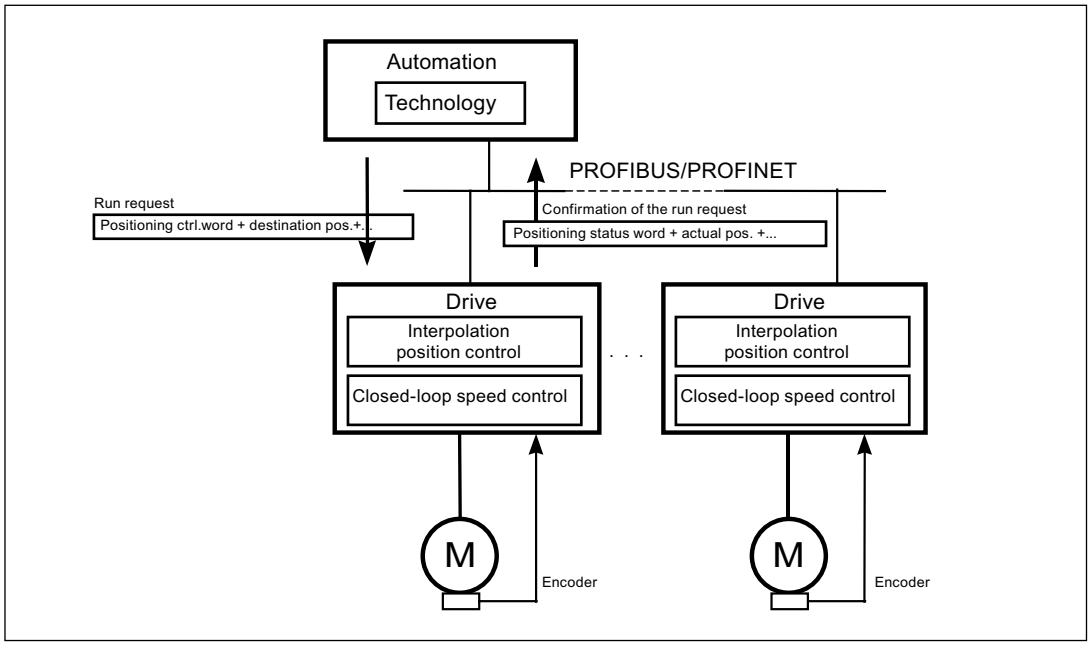

Figure 9-3 Application class 3

Application class 4 (central motion control)

This application class defines a speed setpoint interface with execution of the speed control on the drive and of the positioning control in the controller, such as is required for robotics and machine tool applications with coordinated motions on multiple drives.

Motion control is primarily implemented by means of a central numerical controller (CNC). The position control loop is closed via the bus. The synchronization of the position control cycles in the control and in the closed-loop controllers in the drive requires a clock synchronization of the kind provided by PROFIBUS DP.

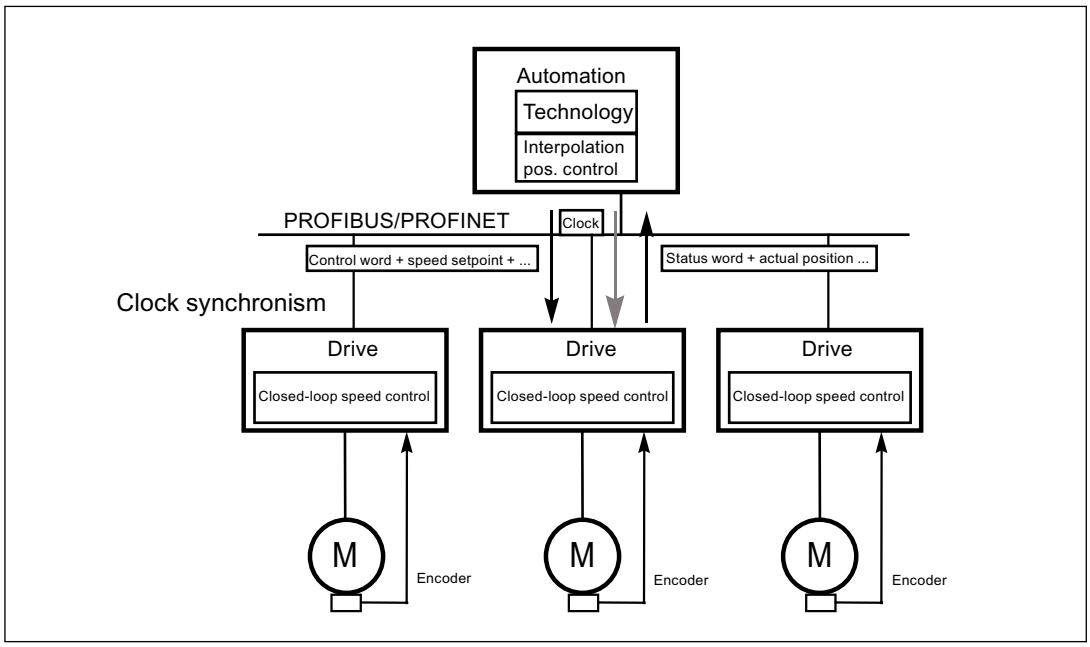

Figure 9-4 Application class 4

Dynamic Servo Control (DSC)

The PFOFIdrive profile contains the "Dynamic Servo Control" control concept. This can be used to significantly increase the dynamic stability of the position control loop in application class 4 with simple means.

For this purpose, the deadtime that is typical for a speed setpoint interface is minimized by an additional measure (see also chapter "Dynamic Servo Control").

Selection of telegrams as a function of the application class

The telegrams listed in the table below (see also chapter "Telegrams and process data") can be used in the following application classes:

Table 9- 2 Selection of telegrams as a function of the application class

Telegram (p0922 = x)	Description	Class 1	Class 2	Class 3	Class 4
1	Speed setpoint, 16 bit	x	x		
2	Speed setpoint, 32 bit	x	x		
3	Speed setpoint, 32 bit with 1 position encoder		x		x
4	Speed setpoint, 32 bit with 2 position encoders				x
7	Positioning, telegram 7 (basic positioner)			x	
9	Positioning, telegram 9 (basic positioner with direct input)			x	
102	Speed setpoint, 32 bit with 1 position encoder and torque reduction				x
103	Speed setpoint, 32 bit with 2 position encoders and torque reduction				x
110	Basic positioner with MDI, override and XIST_A			x	
111	Basic positioner in MDI mode			x	
390	Control Unit with digital inputs/outputs	x	x	x	x
391	Control Unit with digital inputs/outputs and 2 measuring probes	x	x	x	x
999	Free telegrams	x	x	x	x

9.1.3 Cyclic communication

Cyclic communication is used to exchange time-critical process data.

9.1.3.1 Telegrams and process data

General information

The selection of a telegram via p0922 determines which data on the drive unit side (Control Unit) will be transferred.

From the perspective of the drive unit, the received process data comprises the receive words and the process data to be sent the send words.

The receive and send words comprise the following elements:

- Receive words: Control words or setpoints
- Send words: Status words or actual values

What telegrams are available?

1. Standard telegrams

   The standard telegrams are structured in accordance with the PROFIdrive Profile. The internal process data links are set up automatically in accordance with the telegram number setting.

   The following standard telegrams can be set via p0922:

   – 1 Speed setpoint, 16 bit
   – 2 Speed setpoint, 32 bit
   – 3 Speed setpoint, 32 bit with 1 position encoder
   – 4 Speed setpoint, 32 bit with 2 position encoders
   – 7 Positioning, telegram 7 (basic positioner)
   – 9 Positioning, telegram 9 (basic positioner with direct input)

2. Manufacturer-specific telegrams

   The manufacturer-specific telegrams are structured in accordance with internal company specifications. The internal process data links are set up automatically in accordance with the telegram number setting.

   The following vendor-specific telegrams can be set via p0922:

   – 102 Speed setpoint, 32 bit with 1 position encoder and torque reduction
   – 103 Speed setpoint, 32 bit with 2 position encoders and torque reduction
   – 110 Positioning, telegram 10 (basic positioner with MDI, override and XIST_A)
   – 111 Positioning, telegram 11 (basic positioner in MDI mode)
   – 390 Control Unit with digital inputs/outputs
   – 391 Control Unit with digital inputs/outputs and 2 measuring probes

3. Free telegrams (p0922 = 999)

   The send and receive telegrams can be configured as required by using BICO technology to interconnect the send and receive process data.

	SERVO	CU_S110
DWORD connector output	r2060[0 ... 14]	-
WORD connector output	r2050[0 ... 15]	r2050[0 ... 4]
Binector output	r2090.0 ... 15 r2091.0 ... 15 r2092.0 ... 15 r2093.0 ... 15	r2090.0 ... 15 r2091.0 ... 15
Free binector-connector converter	p2080[0 ... 15], p2081[0 ... 15], p2082[0 ... 15], r2089[0 ... 4]	
DWORD connector input	p2061[0 ... 14]	-
WORD connector input	p2051[0 ... 18]	p2051[0 ... 14]

Telegram interconnections

When you change p0922 = 999 (factory setting) to p0922 ≠ 999, the telegrams are interconnected and blocked automatically.

Note

Telegram 111 is the exception: Here, PZD12 in the transmit telegram or PZD12 in the receive telegram can be interconnected as required.

When you change p0922 ≠ 999 to p0922 = 999, the previous telegram interconnection is retained and can be changed.

Note

If p0922 = 999, a telegram can be selected in p2079. A telegram interconnection is automatically made and blocked. The telegram can also be extended.

This is an easy method of creating extended telegram interconnections on the basis of existing telegrams.

The telegram structure

The parameter p0978 contains the sequence of DOs that use a cyclic PZD exchange. A zero delimits the DOs that do not exchange any PZDs.

If the value 255 is written to p0978, the drive unit emulates an empty drive object that is visible to the PROFIdrive Master. This permits cyclic communication of a PROFIdrive Master

- with unchanged configuration to drive units that have a different number of drive objects.
- with deactivated DOs without having to change the project.

Note

- The following must apply to ensure conformity with the PROFIdrive profile:
  - Interconnect PZD receive word 1 as control word 1 (STW1).
  - Interconnect PZD send word 1 as status word 1 (STW1).
    Use WORD format for PZD1.
- One PZD = one word.
  Only one of the interconnection parameters (p2051 or p2061) can have the value ≠ 0 for a PZD word.
- Physical word and double word values are inserted in the telegram as referenced variables.
  p200x are relevant as reference values (telegram contents = 4000 hex or 4000 0000 hex for double words if the input variable has a value of p200x).

Structure of the telegrams

You can find an overview of the structure of telegrams in function diagrams 2420, 2422, and 2423 in the SINAMICS S110 List Manual.

Depending on the drive object, only certain telegrams can be used:

Drive object	Telegrams (p0922)
SERVO	1, 2, 3, 4, 102, 103, 999
SERVO (EPOS)	7, 9, 110, 111, 999
CU_S110	390, 391, 999

Depending on the drive object, the following maximum number of process data items can be transmitted for user-defined telegram structures:

Drive object	Max. number of PZD for sending / receiving
• SERVO	Send 19, receive 16
• CU_S110	Send 15, receive 5

Interface Mode

Interface Mode is used for adjusting the assignment of the control and status words in line with other drive systems and standardized interfaces.

The mode can be set as follows:

Value	Interface Mode
p2038 = 0	SINAMICS (factory setting)
p2038 = 1	SIMODRIVE 611 universal

Procedure:

1. Set p0922 ≠ 999.
2. p2038 = set required interface mode.

If you set telegrams 102 and 103, Interface Mode is set by default (p2038 = 1) and cannot be changed.

Interface Mode is also set by default with positioning telegrams (7, 9, 110, and 111) and cannot be changed (p2038 = 0 set).

When a telegram that specifies the Interface Mode (e.g. p0922 = 102) is changed to a different telegram (e.g. p0922 = 3), the setting in p2038 is retained.

Function diagrams (see SINAMICS S110 List Manual)

- 2410 PROFIBUS address, diagnostic
- ...
- 2498 – E_DIGITAL interconnection

9.1.3.2 Description of control words and setpoints

Note

This chapter describes the assignment and meaning of the process data in SINAMICS interface mode (p2038 = 0).

The reference parameter is also specified for the relevant process data. The process data are generally normalized in accordance with parameters p2000 to r2004.

The following scalings apply:

A temperature of 100°C = 100% and 0°C = 0%

An electrical angle of 90° = 100 % and 0° = 0%.

Overview of control words and setpoints

Table 9- 3 Overview of control words and setpoints, profile-specific

Abbreviation Signal	Name	Signal number	Data type 1)	Interconnection parameters
STW1	Control word 1	1	U16	(bit-serial)2)
STW2	Control word 2	3	U16	(bit-serial)2)
NSOLL_A	Speed setpoint A (16-bit)	5	I16	p1155 p1070(ext.setp.)
NSOLL_B	Speed setpoint B (32-bit)	7	I32	p1155 p1070(ext. setp.) p1430(DSC)
G1_STW	Encoder 1 control word	9	U16	p0480[0]
G2_STW	Encoder 2 control word	13	U16	p0480[1]
A_DIGITAL	Digital output (16 bits)	22	U16	(bit-serial)
SATZANW	EPOS block selection	32	I32	(bit-serial)
MDI_TARPOS	MDI position	34	I32	p2642
MDI_VELOCITY	MDI velocity	35	I32	p2643
MDI_ACC	MDI acceleration	36	I16	p2644
MDI_DEC	MDI delay	37	I16	p2645
MDI_MOD	MDI mode specification	38	U16	(bit-serial)

1) Data type according to PROFIdrive profile V4:
I16 = Integer16, I32 = Integer32, U16 = Unsigned16, U32 = Unsigned32
2) Bit-serial interconnection: refer to the following pages

Table 9- 4 Overview of control words and setpoints, manufacturer-specific

Abbreviation	Name	Signal number	Data type 1)	Interconnection parameters
MOMRED	Torque reduction	101	I16	p1542
MT-STW	Probe control word	130	U16	P0682
POS_STW	Positioning control word	203	U16	(bit-serial)
OVERRIDE	Override in positioning mode	205	I16	p2646
POS_STW1	Positioning control word 1	220	U16	(bit-serial)
POS_STW2	Positioning control word 2	222	U16	(bit-serial)
MDI_MODE	MDI mode	229	U16	p2654
CU_STW1	Control word for Control Unit (CU)	500	U16	(bit-serial)
1) Data type according to PROFIdrive profile V4: I16 = Integer16, I32 = Integer32, U16 = Unsigned16, U32 = Unsigned32 2) Bit-serial interconnection: Refer to the following pages				

STW1 (control word 1)

See function diagram [2442]

Table 9- 5 Description of STW1 (control word 1)

Bit	Meaning	Remarks		BICO
0	ON/OFF1	0/1	ON Pulse enable possible	BI: p0840
		0	OFF1 Braking with the ramp-function generator, then pulse suppression and switching on inhibited.	
1	OFF2	1	No OFF2 Enable possible	BI: p0844
		0	Immediate pulse suppression and switching on inhibited	
	Note: Control signal OFF2 is generated by ANDing BI: p0844 and BI: p0845.			
2	OFF3	1	No OFF3 Enable possible	BI: p0848
		0	Quick stop (OFF3) Braking with OFF3 ramp p1135, then pulse suppression and switching on inhibited.	
	Note: Control signal OFF3 is generated by ANDing BI: p0848 and BI: p0849.			
3	Enable operation	1	Enable operation Pulse enable possible	BI: p0852, p1224.1 (with extended brake control only)
		0	Disable operation Cancel pulses	
4	Enable ramp-function generator	1	Operating condition Ramp-function generator enable possible	BI: p1140

Bit	Meaning	Remarks		BICO
		0	Inhibit ramp-function generator Set ramp-function generator output to zero	
5	Restart ramp-function generator	1	Restart ramp-function generator	BI: p1141
		0	Freeze ramp-function generator	
	Note: The ramp-function generator cannot be frozen via p1141 in jog mode (r0046.31 = 1).			
6	Enable speed setpoint	1	Enable setpoint	BI: p1142
		0	Inhibit setpoint Set ramp-function generator input to zero	
7	Acknowledge fault	0/1	Acknowledge fault	BI: p2103
		0	No effect	
	Note: Faults are acknowledged at a 0/1 edge via BI: p2103.			
8..9	Reserved	-	-	-
10	Master control by PLC	1	Master control by PLC This signal must be set so that the process data transferred via PROFIdrive are accepted and become effective.	BI: p0854
		0	PLC has no master control Process data transferred via PROFIdrive are rejected - i.e. assumed to be zero.	
	Note: This bit should not be set to "1" until the PROFIdrive has returned an appropriate status via ZSW1.9 = "1".			
11	Setpoint inversion (Only with "extended setpoint channel" and "extended ramp-function generator")	1	Setpoint inversion	BI: p1113
		0	No setpoint inversion	
12	Reserved	-	-	-
13	Motorized potentiometer, setpoint, raise (Only with "extended setpoint channel" and "extended ramp-function generator")	1	Motorized potentiometer, setpoint, raise	BI: p1035
		0	Motorized potentiometer setpoint raise not selected	
14	Motorized potentiometer, setpoint, lower (Only with "extended setpoint channel" and "extended ramp-function generator")	1	Motorized potentiometer, setpoint, lower	BI: p1036
		0	Motorized potentiometer setpoint lower not selected	
15	Reserved	-	-	-

STW1 (control word 1), positioning mode, p0108.4 = 1

See function diagram [2475]

Table 9- 6 Description of STW1 (control word 1), positioning mode

Bit	Meaning	Remarks		BICO
0	ON/OFF1	0/1	ON Pulse enable possible	BI: p0840
		0	OFF1 Braking with the ramp-function generator, then pulse suppression and switching on inhibited.	
1	OFF2	1	No OFF2 Enable possible	BI: p0844
		0	OFF2 Immediate pulse suppression and switching on inhibited	
	Note: Control signal OFF2 is generated by ANDing BI: p0844 and BI: p0845.			
2	OFF3	1	No OFF3 Enable possible	BI: p0848
		0	Quick stop (OFF3) Braking with OFF3 ramp p1135, then pulse suppression and switching on inhibited.	
	Note: Control signal OFF3 is generated by ANDing BI: p0848 and BI: p0849.			
3	Enable operation	1	Enable operation Pulse enable possible	BI: p0852
		0	Disable operation Cancel pulses	
4	Reject traversing task	1	Do not reject traversing task	BI: p1140
		0	Reject traversing task	
5	Intermediate stop	1	No intermediate stop	BI: p2640
		0	Intermediate stop	
6	Activate traversing task	0/1	Enable setpoint	BI: p2631, p2650
		0	No effect	
	Note: The interconnection p2649 = 0 is also made.			
7	Acknowledge fault	0/1	Acknowledge fault	BI: p2103
		0	No effect	
8	Jog 1	1	Jog 1 ON See also SINAMICS S110 List Manual, function diagram 3610	BI: p2589
		0	No effect	
9	Jog 2	1	Jog 2 ON See also SINAMICS S110 List Manual, function diagram 3610	BI: p2590
		0	No effect	

Bit	Meaning	Remarks		BICO
10	Master control by PLC	1	Control by PLC This signal must be set so that the process data transferred via PROFIdrive are accepted and become effective.	BI: p0854
		0	No control by PLC Process data transferred via PROFIdrive are rejected - i.e. assumed to be zero.	
	Note: This bit should not be set to "1" until the PROFIdrive has returned an appropriate status via ZSW1.9 = "1".			
11	Start referencing	1	Start referencing	BI: p2595
		0	Stop referencing	
12	Reserved	-	-	-
13	External block change	0/1	External set change is initiated	BI: 2632
		0	No effect	
14	Reserved	-	-	-
15	Reserved	-	-	-

STW2 (control word 2)

See function diagram [2444]

Table 9- 7 Description of STW2 (control word 2)

Bit	Meaning	Remarks		BICO
0	Drive data set selection DDS bit 0	-	Drive data set selection (5 bit counter)	BI: p0820[0]
1...6	Reserved	-	-	-
7	Parking axis	1	Request parking axis (handshake with ZSW2 bit 7)	BI: p0897
		0	No request	
8	Travel to fixed stop (not with telegrams 9, 110)	1	Select "Travel to fixed stop" The signal must be set before the fixed stop is reached.	BI: p1545
		1/0	Deselect "Travel to fixed stop" The signal must be set before the fixed stop is reached	
9..10	Reserved	-	-	-
11	Motor changeover	0/1	Motor changeover complete	BI: p0828[0]
		0	No effect	
12	Master sign of life bit 0	-	User data integrity (4-bit counter)	CI: p2045
13	Master sign of life bit 1	-		
14	Master sign of life bit 2	-		
15	Master sign of life bit 3	-		

NSOLL_A (speed setpoint A (16-bit))

- Speed setpoint with a 16-bit resolution with sign bit.
- Bit 15 determines the sign of the setpoint:
  - Bit = 0 --> positive setpoint
  - Bit = 1 --> negative setpoint
- The speed is normalized via p2000.

  NSOLL_A = 4000 hex or 16384 dec ≙ speed in p2000

NSOLL_B (speed setpoint B (32-bit))

- Speed setpoint with a 32-bit resolution with sign bit.
- Bit 31 determines the sign of the setpoint:
  - Bit = 0 --> positive setpoint
  - Bit = 1 --> negative setpoint
- The speed is normalized via p2000.

  NSOLL_B = 4000 0000 hex or 1 073 741 824 dec ≙ speed in p2000

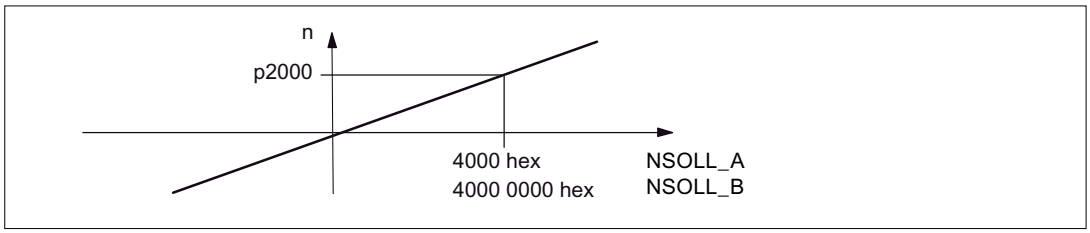

Figure 9-5 Normalization of speed

Gn_STW (encoder n control word)

This process data belongs to the encoder interface.

A_DIGITAL
MT_STW
CU_STW1

These process data are part of the central process data.

MOMRED (torque reduction)

This setpoint can be used to reduce the torque limit currently active on the drive.

When you use manufacturer-specific PROFIdrive telegrams with the MOMRED control word, the signal flow is automatically interconnected up to the point where the torque limit is scaled.

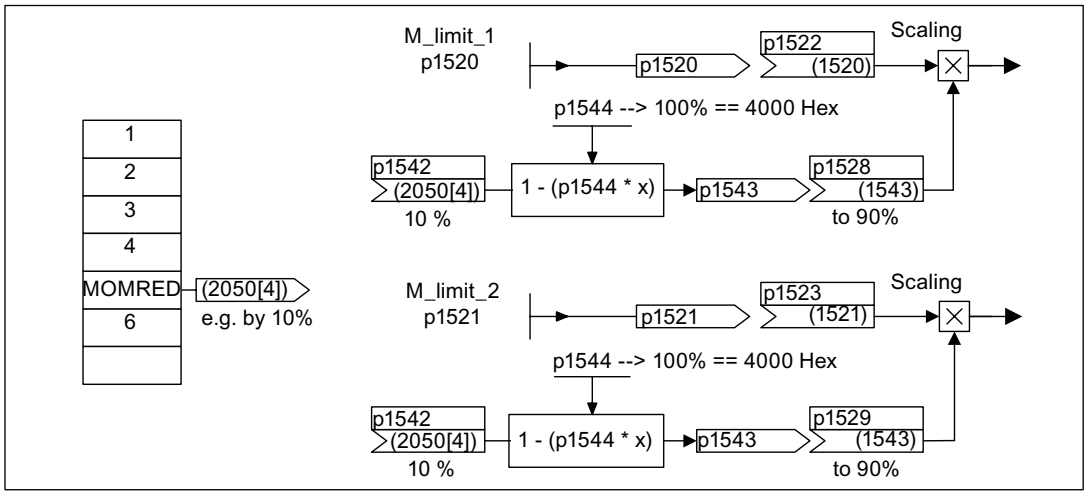

Figure 9-6 MOMRED setpoint

MOMRED specifies the percentage by which the torque limit is to be reduced. This value is converted internally to the amount by which the torque is to be reduced and normalized via p1544.

SATZANW (positioning mode, p0108.4 =1)

See function diagram [2476]

Table 9- 8 Description of BLOCKSEL (positioning mode, p0108.4 =1)

Bit	Meaning	Remarks		BICO
0	1 = block selection, bit 0 (2^0)	Block selection Traversing block 0 to 63		BI: p2625
1	1 = block selection, bit 1 (2^1)			BI: p2626
2	1 = block selection, bit 2 (2^2)			BI: p2627
3	1 = block selection, bit 3 (2^3)			BI: p2628
4	1 = block selection, bit 4 (2^4)			BI: p2629
5	1 = block selection, bit 5 (2^5)			BI: p2630
6 ... 14	Reserved	-	-	-
15	Activate MDI	1	Activate MDI	p2647
		0	De-activate MDI	
Note: See also: Basic positioner section				

POS_STW (positioning mode, p0108.4 =1)

See function diagram [2462].

Table 9- 9 Description of POS_STW (positioning mode, p0108.4 = 1)

Bit	Meaning	Remarks		BICO
0	Tracking mode	1	Activate tracking mode	BI: 2655
		0	Tracking mode deactivated	
1	Set reference point	1	Set reference point	BI: 2596
		0	Do not set reference point	
2	Reference cam	1	Reference cam active	BI: 2612
		0	Reference cam not active	
3, 4	Reserved	-	-	-
5	Incremental jog	1	Incremental jog active	BI: 2591
		0	Jog velocity active	
6 ... 15	Reserved	-	-	-
Note: See also: Basic positioner section				

POS_STW1 (control word 1, positioning mode, r0108.4 = 1)

See function diagram [2463].

Table 9- 10 Description of POS_STW1 (control word 1)

Bit	Meaning	Remarks		BICO
0	EPOS traversing block selection bit 0	Traversing block selection		BI: p2625
1	EPOS traversing block selection bit 1			BI: p2626
2	EPOS traversing block selection bit 2			BI: p2627
3	EPOS traversing block selection bit 3			BI: p2628
4	EPOS traversing block selection bit 4			BI: p2629
5	EPOS traversing block selection bit 5			BI: p2630
6...7	Reserved	-	-	-
8	EPOS direct setpoint input/MDI positioning type Set the signal source for the positioning type in mode "Direct setpoint input/MDI".	1	Absolute positioning is selected.	BI: p2648
		0	Relative positioning is selected.	
9	EPOS direct setpoint input/MDI, positive direction selection	0/0 1/0 0/1 1/1	During "set-up": If both directions (p2651, p2652) are selected or deselected, the axis remains stationary. During "positioning": BI: p2651 / BI: p2652 Position absolutely via shortest route. Position absolutely in the positive direction. Position absolutely in the negative direction. Position absolutely via shortest route.	BI: p2651
10	EPOS direct setpoint input/MDI, negative direction selection			BI: p2652
11	Reserved	-	-	-
12	EPOS direct setpoint input/MDI, acceptance method selection Set the signal source for the method of accepting values in mode "Direct setpoint input/MDI".	1	Continuous acceptance of values Please see the description in the List Manual.	BI: p2649
		0	Values are only accepted when BI: p2650 = 0/1 signal (rising edge).	
13	Reserved	-	-	-
14	EPOS direct setpoint input/MDI, setup selection Set the signal source for set-up in mode "Direct setpoint input/MDI".	1	Set-up selected.	BI: p2653
		0	Positioning selected.	
15	EPOS direct setpoint input/MDI selection Set the signal source for the selection of mode "Direct setpoint input/MDI".	-	-	BI: p2647

POS_STW2 (control word 2, positioning mode, p0108.4 =1)

See function diagram [2464].

Table 9- 11 Description of POS_STW2 (control word 2, positioning mode, p0108.4 = 1)

Bit	Meaning	Remarks		BICO
0	Tracking mode	1	Activate tracking mode	BI: p2655
		0	Tracking mode deactivated	
1	Set reference point	1	Set reference point	BI: p2596
		0	Do not set reference point	
2	Reference cam	1	Reference cam active	BI: p2612
		0	Reference cam not active	
3..4	Reserved	-	-	-
5	Incremental jog	1	Incremental jog active	BI: p2591
		0	Jog velocity active	
6..7	Reserved	-	-	-
8	Reference type selection	1	Flying referencing	BI: p2597
		0	Reference point approach	
9	Reference point approach start direction	1	Start in negative direction	BI: p2604
		0	Start in positive direction	
10	LR measuring probe evaluation, selection Set the signal source for selection of the measuring probe.	1	Measuring probe 2 is activated when BI: p2509 = 0/1 edge activated.	BI: p2510
		0	Measuring probe 1 is activated when BI: p2509 = 0/1 edge activated.	
11	LR measuring probe evaluation edge Set the signal source for edge evaluation of the measuring probe.	1	Falling edge of measuring probe (p2510) is activated when BI: p2509 = 0/1 edge activated.	BI: p2511
		0	Rising edge of measuring probe (p2510) is activated when BI: p2509 = 0/1 edge activated.	
12...13	Reserved	-	-	-
14	EPOS software limit switch activation Set the signal source for activation of "Software limit switches".	1	Axis is referenced (r2684.11 = 1) and BI: p2582 = 1 signal.	BI: p2582
		0	Software limit switches inoperative: - Modulo offset active (BI: p2577 = 1 signal). - Reference point approach is executed.	
15	EPOS STOP cam activation Set the signal source for activation of "STOP cams".	1	BI: p2568 = 1 signal --> Evaluation of the STOP cam minus (BI: p2569) and STOP cam plus (BI: p2570) is active.	BI: p2568
		0	Evaluation of STOP cams is not active	
Note: See also: Basic positioner section				

OVERRIDE (Pos Velocity Override)

This process data defines the percentage for the velocity override.

Normalization: 4000 hex (16384 dec) = 100 %

Range of values: 0 ... 7FFF hex

Values outside this range are interpreted as 0%.

MDI_TARPOS (MDI position)

This process data defines the position for MDI sets.

Normalization: 1 corresponds to 1 LU

MDI_VELOCITY (MDI velocity)

This process data defines the velocity for MDI sets.

Normalization: 1 corresponds to 1000 LU/min

MDI_ACC (MDI acceleration)

This process data defines the acceleration for MDI sets.

Normalization: 4000 hex (16384 dec) = 100 %

The value is restricted to 0.1 ... 100% internally.

MDI_DEC (MDI deceleration override)

This process data defines the percentage for the deceleration override for MDI sets.

Normalization: 4000 hex (16384 dec) = 100 %

The value is restricted to 0.1 ... 100% internally.

MDI_MOD

For a detailed table see function diagram [2480].

Table 9- 12 Signal targets for MDI_MOD (positioning mode, r0108.4 = 1)

Bit	Meaning				Interconnection parameter
0	0= Absolute positioning 1= Relative positioning				p2648=r2094.0
1 2	0 = Absolute positioning for modulo axes via the shortest route 1 = Absolute positioning for modulo axes in positive direction 2 = Absolute positioning for modulo axes in negative direction 3 = Absolute positioning for modulo axes via the shortest route				p2651=r2094.1 p2652=r2094.2
3...15	Reserved	-	-	-	-

MDI_MODE

This process data defines the mode for MDI sets.

Precondition: p2654 > 0
MDI_MODE = xx0x hex –> Absolute
MDI_MODE = xx1x hex –> Relative
MDI_MODE = xx2x hex –> Abs_pos (with modulo offset only)
MDI_MODE = xx3x hex –> Abs_neg (with modulo offset only)

9.1.3.3 Description of status words and actual values

Description of status words and actual values

Note

This chapter describes the assignment and meaning of the process data in SINAMICS interface mode (p2038 = 0).

The reference parameter is also specified for the relevant process data. The process data are generally normalized in accordance with parameters p2000 to r2004.

The following scalings also apply:
A temperature of 100°C = 100%
An electrical angle of 90° also = 100%.

Overview of status words and actual values

Table 9- 13 Overview of status words and actual values, profile-specific

Abbreviation	Name	Signal number	Data type 1)	Interconnection parameters
ZSW1	Status word 1	2	U16	r2089[0]
ZSW2	Status word 2	4	U16	r2089[1]
NACT_A	Speed setpoint A (16 bit)	6	I16	r0063
NACT_B	Speed setpoint B (32 bit)	8	I32	r0063
G1_ZSW	Encoder 1 status word	10	U16	r0481[0]
G1_XIST1	Encoder 1 actual position value 1	11	U32	r0482[0]
G1_XIST2	Encoder 1 actual position value 2	12	U32	r0483[0]
G2_ZSW	Encoder 2 status word	14	U16	r0481[1]
G2_XIST1	Encoder 2 actual position value 1	15	U32	r0482[1]
G2_XIST2	Encoder 2 actual position value 2	16	U32	r0483[1]
E_DIGITAL	Digital inputs (16 bits)	21	U16	r2089[2]
XIST_A	Pos position actual value	28	I32	r2521[0]
AKTSATZ	Pos selected block	33	U16	r2670

1) Data type according to PROFIdrive profile V4:
I16 = Integer16, I32 = Integer32, U16 = Unsigned16, U32 = Unsigned32
2) Bit-serial interconnection: Refer to the following pages, r2089 via binector-connector converter

Table 9- 14 Overview of status words and actual values, manufacturer-specific

Abbreviation	Name	Signal number	Data type 1)	Interconnection parameters
MELDW	Message word	102	U16	r2089[2]
MT_ZSW	Probe status word	131	U16	r0688
MT1_ZS_F	Probe 1 time stamp falling edge	132	U16	r0687[0]
MT1_ZS_S	Probe 1 time stamp rising edge	133	U16	r0686[0]
MT2_ZS_F	Probe 2 time stamp falling edge	134	U16	r0687[1]
MT2_ZS_S	Probe 2 time stamp rising edge	135	U16	r0686[1]
POS_ZSW	Positioning status word	204	U16	r2683
POS_ZSW1	Positioning status word 1	221	U16	r2089[3]
POS_ZSW2	Positioning status word 2	223	U16	r2089[4]
FAULT_CODE	Fault code	301	U16	r2131
WARN_CODE	Alarm code	303	U16	r2132
CU_ZSW1	Status word for Control Unit (CU)	501	U16	r2089[1]

1) Data type according to PROFIdrive profile V4:
I16 = Integer16, I32 = Integer32, U16 = Unsigned16, U32 = Unsigned32
2) Bit-serial interconnection: Refer to the following pages, r2089 via binector-connector converter

ZSW1 (status word 1)

See function diagram [2452]

Table 9- 15 Description of ZSW1 (status word 1)

Bit	Meaning	Remarks		BICO
0	Ready for switching on	1	Ready for switching on Power supply on, electronics initialized, line contactor released if necessary, pulses inhibited.	BO: r0899.0
		0	Not ready for switching on	
1	Ready for operation	1	Ready for operation Voltage at Line Module (i.e. line contactor closed (if used)), field being built up.	BO: r0899.1
		0	Not ready for operation Reason: No ON command has been issued.	
2	Operation enabled	1	Operation enabled Enable electronics and pulses, then ramp up to active setpoint.	BO: r0899.2
		0	Operation inhibited	
3	Fault active	1	Fault active The drive is faulty and, therefore, out of service. The drive switches to "switching on inhibited" once the fault has been acknowledged and the cause has been remedied. The active faults are stored in the fault buffer.	BO: r2139.3
		0	No fault present No active fault in the fault buffer.	
4	Coasting active (OFF2)	1	No OFF2 active	BO: r0899.4
		0	Coasting active (OFF2) An OFF2 command is active.	
5	Quick stop active (OFF3)	1	No OFF3 active	BO: r0899.5
		0	Quick stop active (OFF3) An OFF3 command is active.	
6	Switching on inhibited	1	Switching on inhibited A restart is only possible by means of OFF1 and then ON.	BO: r0899.6
		0	No "switching on inhibited" Power-up is possible.	
7	Alarm present	1	Alarm present The drive is operational again. No acknowledgement necessary. The active alarms are stored in the alarm buffer.	BO: r2139.7
		0	No alarm present No active alarm in the alarm buffer.	

Bit	Meaning	Remarks		BICO
8	Speed setpoint-actual value deviation within tolerance band	1	Setpoint-actual value monitoring within tolerance band Actual value within a tolerance band; dynamic overshoot or undershoot for t < t_{max} permissible, e.g. n = n_{set}± f = f_{set}±, etc., t_{max} can be parameterized	BO: r2197.7
		0	Setpoint/actual value monitoring not within tolerance band	
9	Control request to PLC	1	Control requested The PLC is requested to assume control. Condition for applications with isochronous mode: drive synchronized with PLC system.	BO: r0899.9
		0	Local operation Control only possible on device	
10	f or n comparison value reached or exceeded	1	f or n comparison value reached or exceeded.	BO: r2199.1
		0	f or n comparison value not reached.	
	Note: The message is parameterized as follows: p2141 Threshold value p2142 Hysteresis			
11	I, M or P limit reached or exceeded	1	I, M or P limit not reached	BO: r1407.7
		0	I, M or P limit reached or exceeded	
12	Holding brake open	1	Holding brake opened	BO: r0899.12
		0	Holding brake closed	
13	No motor overtemperature alarm	1	Motor overtemperature alarm not active	BO: r2135.14
		0	Motor overtemperature alarm active	
14	n_act >= 0	1	Actual speed > = 0	BO: r2197.3
		0	Actual speed < 0	
15	Alarm, drive converter thermal overload	1	No alarm present	BO: r2135.15
		0	Alarm, converter thermal overload The overtemperature alarm for the converter is active.	

ZSW1 (status word 1, positioning mode, p0108.4 = 1)

See function diagram [2479]

*Valid for p0922 = 111 (telegram 111).

For p0922 = 110 (telegram 110): Bits 14 and 15 reserved.

Table 9- 16 Description of ZSW1 (status word 1, positioning mode)

Bit	Meaning	Remarks		BICO
0	Ready for switching on	1	Ready for switching on Power supply on, electronics initialized, line contactor released if necessary, pulses inhibited.	BO: r0899.0
		0	Not ready for switching on	
1	Ready for operation	1	Ready for operation Voltage at Line Module (i.e. line contactor closed (if used)), field being built up.	BO: r0899.1
		0	Not ready for operation Reason: No ON command has been issued.	
2	Operation enabled	1	Operation enabled Enable electronics and pulses, then ramp up to active setpoint.	BO: r0899.2
		0	Operation inhibited	
3	Fault active	1	Fault active The drive is faulty and, therefore, out of service. The drive switches to "switching on inhibited" once the fault has been acknowledged and the cause has been remedied. The active faults are stored in the fault buffer.	BO: r2139.3
		0	No fault present No active fault in the fault buffer.	
4	Coasting active (OFF2)	1	No OFF2 active	BO: r0899.4
		0	Coasting active (OFF2) An OFF2 command is active.	
5	Quick stop active (OFF3)	1	No OFF3 active	BO: r0899.5
		0	Quick stop active (OFF3) An OFF3 command is active.	
6	Switching on inhibited	1	Switching on inhibited A restart is only possible by means of OFF1 and then ON.	BO: r0899.6
		0	No "switching on inhibited" Power-up is possible.	
7	Alarm present	1	Alarm present The drive is operational again. No acknowledgement necessary. The active alarms are stored in the alarm buffer.	BO: r2139.7
		0	No alarm present No active alarm in the alarm buffer.	

Bit	Meaning	Remarks		BICO
8	Following error within the tolerance range	1	Setpoint-actual value monitoring within tolerance band Actual value within a tolerance bandwidth; The tolerance bandwidth can be parameterized.	BO: r2684.8
		0	Setpoint/actual value monitoring not within tolerance band	
9	Control request to PLC	1	Control requested The PLC is requested to assume control. Condition for applications with isochronous mode: drive synchronized with PLC system.	BO: r0899.9
		0	Local operation Control only possible on device	
10	Target position reached	1	Target position reached	BO: r2684.10
		0	Target position not reached	
11	Reference point set	1	Reference point set	BO: r2684.11
		0	Reference point not set	
12	Acknowledgement, traversing block activated	0/1	Acknowledgement, traversing block	BO: r2684.12
		0	No effect	
13	Drive at standstill	1	Drive at standstill	BO: r2199.0
		0	Drive not at standstill	
14*	Axis accelerating (telegram 111)	1	Axis is accelerating.	BO: r2684.4
		0	Axis is not accelerating.	
15*	Axis decelerating (telegram 111)	1	Axis is decelerating.	BO: r2684.5
		0	Axis is not decelerating.	

ZSW2 (status word 2)

See function diagram [2454]

Table 9- 17 Description of ZSW2 (status word 2)

Bit	Meaning	Remarks		BICO
0	DDS eff., bit 0	–	Drive data set effective (2-bit counter)	BO: r0051.0
1	DDS eff., bit 1	–		BO: r0051.1
2...4	Reserved	–	–	–
5	Alarm class bit 0	–	Bits 5-6: Alarm stage of SINAMICS drives, transferred as attribute in alarm message value = 0: Alarm (previous alarm stage) value = 1: Alarm class A value = 2: Alarm class B value = 3: Alarm class C	BO: r2139.11
6	Alarm class bit 1	–		BO: r2139.12
7	Parking axis	1	Axis parking active	BO: r0896.0
		0	Axis parking not active	
8	Travel to fixed stop	1	Travel to fixed stop	BO: r1406.8
		0	No travel to fixed stop	
9	Reserved	–	–	–
10	Pulses enabled	1	Pulses enabled	BO: r0899.11
		0	Pulses not enabled	
11	Data set changeover	1	Data record changeover active	BO: r0835.0
		0	No data set changeover active	
12	Slave sign of life bit 0	–	User data integrity (4-bit counter)	Implicitly interconnected
13	Slave sign of life bit 1	–		
14	Slave sign of life bit 2	–		
15	Slave sign of life bit 3	–		

NACT_A (Speed setpoint A (16 bit))

- Actual speed value with 16-bit resolution.
- The speed actual value is normalized in the same way as the setpoint (see NSOLL_A).

NACT_B (Speed setpoint B (32 bit))

- Actual speed value with 32-bit resolution.
- The speed actual value is normalized in the same way as the setpoint (see NSOLL_B).

Gn_ZSW (encoder n status word)
Gn_XIST1 (encoder n position actual value 1)
Gn_XIST2 (encoder n position actual value 2)

This process data belongs to the encoder interface.

E_DIGITAL
MT_ZSW
MTn_ZS_F/MTn_ZS_S
CU_ZSW1

These process data are part of the central process data.

MELDW (message word)

See function diagram [2456]

Table 9- 18 Description of MELDW (message word)

Bit	Meaning	Remarks		BICO
0	Ramp-up/ramp-down completed / ramp-function generator active	1	Ramp-up/ramp-down completed. • The ramp-up procedure is completed once the speed setpoint has been changed.	BO: r2199.5
		1/0	Ramp-up starts. The start of the ramp-up procedure is detected as follows: • The speed setpoint changes, and • The defined tolerance bandwidth (p2164) is exited.	
		0	Ramp-function generator active • The ramp-up procedure is still active once the speed setpoint has been changed.	
		0/1	Ramp-up ends. The end of the ramp-up procedure is detected as follows: • The speed setpoint is constant, and • The actual speed value is within the tolerance bandwidth and has reached the speed setpoint, and • The delay time (p2166) has elapsed.	
1	Torque utilization < p2194	1	Torque utilization < p2194 • The current torque utilization is less than the set torque utilization threshold (p2194), or • Ramp-up is not yet complete.	BO: r2199.11
		0	Torque utilization > p2194 • The current torque utilization is greater than the set torque utilization threshold (p2194).	
	Application: This message indicates that the motor is overloaded and appropriate measures need to be taken to rectify the situation (e.g. stop the motor or reduce the load).			

Bit	Meaning	Remarks		BICO
2	|n_act| < p2161	1	|n_act| < p2161 The actual speed value is less than the set threshold value (p2161).	BO: r2199.0
		0	|n_act| ≥ p2161 The actual speed value is greater than or the same as the set threshold value (p2161).	
	Note: The message is parameterized as follows: p2161 Threshold value p2150 Hysteresis **Application:** To protect the mechanics, the gear stages are not switched mechanically until the speed is less than the set threshold value.			
3	|n_act| ≤ p2155	1	|n_act| ≤ p2155 The actual speed value is less than or the same as the set threshold value (p2155).	BO: r2197.1
		0	|n_act| > p2155 The actual speed value is greater than the set threshold value (p2155).	
	Note: The message is parameterized as follows: p2155 Threshold value p2140 Hysteresis **Application:** Speed monitoring.			
4	Reserved	–	–	–
5	Variable signaling function	1	The monitored signal of a SERVO axis has exceeded the specified threshold value.	BO: r3294
		0	The monitored signal of a SERVO axis is within the specified threshold value or the signaling function is not active	
6	No motor overtemperature alarm	1	No motor overtemperature alarm The temperature of the motor is within the permissible range.	BO: r2135.14
		0	Alarm, motor overtemperature The temperature of the motor is greater than the set motor temperature threshold (p0604).	
	Note: • When the motor temperature threshold is exceeded, only an alarm is output initially to warn you of this. The alarm is canceled automatically when the temperature no longer exceeds the alarm threshold. • If the overtemperature is present for longer than the value set via p0606, a fault is output to warn you of this. • Motor temperature monitoring can be switched-out via p0600 = 0. **Application:** The user can respond to this message by reducing the load. thereby preventing the motor from shutting down with the "Motor temperature exceeded" fault after the set time has elapsed.			
7	No thermal overload in power unit alarm	1	No thermal overload in power unit alarm The temperature of the heat sink in the power unit is within the permissible range.	BO: r2135.15

Bit	Meaning	Remarks		BICO
		0	Thermal overload in power unit alarm The temperature of the heat sink in the power unit is outside the permissible range. If the overtemperature remains, the drive switches itself off after approx. 20 s.	
8	Speed setp - act val deviation in tolerance t_on	1	The speed setpoint/actual value is **within** the tolerance p2163: The signal is switched on after the delay specified in p2167 has elapsed.	BO: r2199.4
		0	The speed setpoint/actual value is **outside** the tolerance.	
9,10	Reserved	-	-	-
11	Controller enable	1	Controller enable	BO: r0899.8
12	Drive ready	1	Drive ready	BO: r0899.7
13	Pulses enabled	1	Pulses enabled The pulses for activating the motor are enabled.	BO: r0899.11
		0	Pulses inhibited	
	Application: Armature short-circuit protection must only be switched on when the pulses are inhibited. This signal can be evaluated as one of many conditions when armature short-circuit protection is activated.			
14, 15	Reserved	-	-	-

AKTSATZ

See function diagram [3650].

Table 9- 19 Description of AKTSATZ (active traversing block/MDI active)

Bit	Meaning	Remarks		BICO
0	Active traversing block, bit 0	–	Active traversing block (6-bit counter)	BO: r2670.0
1	Active traversing block, bit 1	–		BO: r2670.1
2	Active traversing block, bit 2	–		BO: r2670.2
3	Active traversing block, bit 3	–		BO: r2670.3
4	Active traversing block, bit 4	–		BO: r2670.4
5	Active traversing block, bit 5	–		BO: r2670.5
6..14	Reserved	–	–	–
15	MDI active	1	MDI active	BO: r2670.15
		0	MDI not active	

POS_ZSW

See function diagram [3645].

Table 9- 20 Description of POS_ZSW (status word, positioning mode)

Bit	Meaning	Remarks		BICO
0	Tracking mode active	1	Tracking mode active	BO: r2683.0
		0	Tracking mode not active	
1	Velocity limiting active	1	Active	BO: r2683.1
		0	Not active	
2	Setpoint static	1	Setpoint static	BO: r2683.2
		0	Setpoint not static	
3	Position setpoint reached	1	Position setpoint reached	BO: r2683.3
		0	Position setpoint not reached	
4	Axis moves forwards	1	Axis moves forwards	BO: r2683.4
		0	Axis stationary or moves backwards	
5	Axis moves backwards	1	Axis moves backwards	BO: r2683.5
		0	Axis stationary or moves forwards	
6	Software limit switch minus approached	1	Software limit switch minus approached	BO: r2683.6
		0	Software limit switch minus not approached	
7	Software limit switch plus approached	1	Software limit switch plus approached	BO: r2683.7
		0	Software limit switch plus not approached	
8	Actual position value <= cam switching position 1	1	Actual position value <= cam switching position 1	BO: r2683.8
		0	Cam switching position 1 passed	
9	Actual position value <= cam switching position 2	1	Actual position value <= cam switching position 2	BO: r2683.9
		0	Cam switching position 2 passed	
10	Direct output 1 via the traversing block	1	Direct output 1 active	BO: r2683.10
		0	Direct output 1 not active	
11	Direct output 2 via the traversing block	1	Direct output 1 active	BO: r2683.11
		0	Direct output 1 not active	
12	Fixed stop reached	1	Fixed stop reached	BO: r2683.12
		0	Fixed stop is not reached	
13	Fixed stop clamping torque reached	1	Fixed stop clamping torque reached	BO: r2683.13
		0	Fixed stop clamping torque is not reached	
14	Travel to fixed stop active	1	Travel to fixed stop active	BO: r2683.14
		0	Travel to fixed stop not active	
15	Reserved	–	–	–

POS_ZSW1 (status word 1, positioning mode, p0108.4 = 1)

See function diagram [2466].

Table 9- 21 Description of POS_ZSW1 (status word 1, positioning mode, p0108.4 = 1)

Bit	Meaning	Remarks		BICO
0	Active traversing block, bit 0	–	Active traversing block (6-bit counter)	BO: r2670.0
1	Active traversing block, bit 1	–		BO: r2670.1
2	Active traversing block, bit 2	–		BO: r2670.2
3	Active traversing block, bit 3	–		BO: r2670.3
4	Active traversing block, bit 4	–		BO: r2670.4
5	Active traversing block, bit 5	–		BO: r2670.5
6	Reserved	–	–	–
7	Reserved	–	–	–
8	STOP cam minus active	1	–	BO: r2684.13
9	STOP cam plus active	1	–	BO: r2684.14
10	Jog active	1	Jog active	BO: r2094.0 BO: r2669.0
		0	Jog not active	
11	Reference point approach active	1	Reference point approach active	BO: r2094.1 BO: r2669.1
		0	Reference point approach not active	
12	Flying referencing	1	Flying referencing	BO: r2684.1
		0	Flying referencing not active	
13	Traversing blocks active	1	Traversing blocks active	BO: r2094.2 BO: r2669.2
		0	Traversing blocks not active	
14	Set-up active	1	Set-up active	BO: r2094.3 BO: r2669.4
		0	Set-up not active	
15	MDI active	1	MDI active	BO: r2670.15
		0	MDI not active	

XIST_A

Actual position value is displayed

Normalization: 1 corresponds to 1 LU

WARN_CODE

Display of the alarm code (see function diagram 8065).

FAULT_CODE

Display of the fault code (see function diagram 8060).

POS_ZSW2 (status word 2, positioning mode, p0108.4 = 1

See function diagram [2467].

Table 9- 22 Description of POS_ZSW2 (status word 2, positioning mode, p0108.4 = 1

Bit	Meaning	Remarks		BICO
0	Tracking mode active	1	Tracking mode active	BO: r2683.0
		0	Tracking mode not active	
1	Velocity limiting active	1	Active	BO: r2683.1
		0	Not active	
2	Setpoint static	1	Setpoint static	BO: r2683.2
		0	Setpoint not static	
3	Print index outside outer window	1	Flying / passive referencing not active	BO: r2684.3
		0	Flying / passive referencing active	
4	Axis moves forwards	1	Axis moves forwards	BO: r2683.4
		0	Axis stationary or moves backwards	
5	Axis moves backwards	1	Axis moves backwards	BO: r2683.5
		0	Axis stationary or moves forwards	
6	Software limit switch minus approached	1	Software limit switch minus approached	BO: r2683.6
		0	Software limit switch minus not approached	
7	Software limit switch plus approached	1	Software limit switch plus approached	BO: r2683.7
		0	Software limit switch plus not approached	
8	Actual position value <= cam switching position 1	1	Actual position value <= cam switching position 1	BO: r2683.8
		0	Cam switching position 1 passed	
9	Actual position value <= cam switching position 2	1	Actual position value <= cam switching position 2	BO: r2683.9
		0	Cam switching position 2 passed	
10	Direct output 1 via the traversing block	1	Direct output 1 active	BO: r2683.10
		0	Direct output 1 not active	
11	Direct output 2 via the traversing block	1	Direct output 1 active	BO: r2683.11
		0	Direct output 1 not active	
12	Fixed stop reached	1	Fixed stop reached	BO: r2683.12
		0	Fixed stop is not reached	
13	Fixed stop clamping torque reached	1	Fixed stop clamping torque reached	BO: r2683.13
		0	Fixed stop clamping torque is not reached	
14	Travel to fixed stop active	1	Travel to fixed stop active	BO: r2683.14
		0	Travel to fixed stop not active	
15	Traversing command active	1	Axis traversing	BO: r2684.15
		0	Axis stationary	

9.1.3.4 Control and status words for encoder

Description

The process data for the encoders is available in various telegrams. For example, telegram 3 is provided for speed control with 1 position encoder and transmits the process data of encoder 1.

The following process data is available for the encoders:

- Gn_STW encoder n control word (n = 1, 2)
- Gn_ZSW encoder n status word
- Gn_XIST1 encoder n act. pos. value 1
- Gn_XIST2 encoder n act. pos. value 2

Note

Encoder 1: Motor encoder

Encoder 2: Direct measuring system

Example of encoder interface

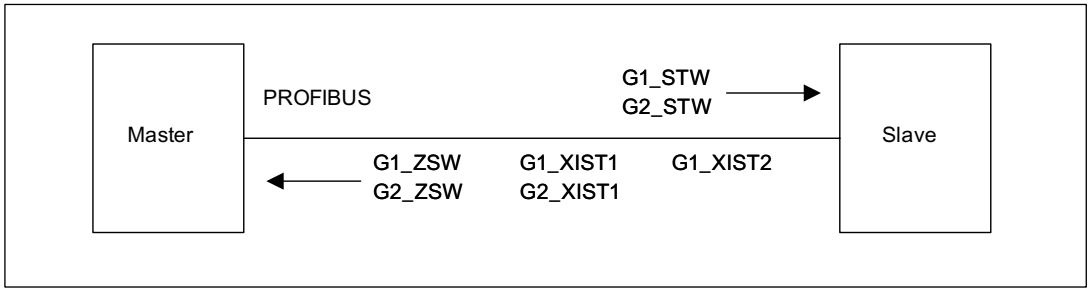

Figure 9-7 Example of encoder interface (encoder-1: two actual values, encoder -2: one actual value)

Encoder n control word (Gn_STW, n = 1, 2)

The encoder control word controls the encoder functions.

Table 9- 23 Description of the individual signals in Gn_STW

Bit	Name		Signal status, description		
0 1 2 3	Find reference mark or flying measurement	Functions	If bit 7 = 0, then find reference mark request applies:		
			Bit	Meaning	
			0	Function 1	Reference mark 1
			1	Function 2	Reference mark 2
			2	Function 3	Reference mark 3
			3	Function 4	Reference mark 4
			If bit 7 = 1, then find flying measurement request applies:		
			0	Function 1	Probe 1 rising edge
			1	Function 2	Probe 2 falling edge
			2	Function 3	Probe 3 rising edge
			3	Function 4	Probe 4 falling edge
			Note:		
			• Bit x = 1 Bit x = 0		Request function Do not request function
			• The following applies if more than 1 function is activated: The values for all functions cannot be read until each activated function has terminated and this has been confirmed in the corresponding status bit (ZSW.0/.1/.2/.3 "0" signal again). • Find reference mark It is possible to search for a reference mark. • Equivalent zero mark • Flying measurement Positive and negative edge can be activated simultaneously.		
4 5 6		Command	Bit 6, 5, 4		Meaning
			000		-
			001		Activate function x
			010		Read value x
			011		Terminate function
			(x: function selected via bit 0-3)		
7		Mode	1	Flying measurement (fine resolution via p0418)	
			0	Find reference mark (fine resolution via p0418)	
8...12	Reserved		-		
13	Request cyclic absolute value		1	Request cyclic transmission of the absolute position actual value in Gn_XIST2. Used for (e.g.): • Additional measuring system monitoring • Synchronization during ramp-up	

Bit	Name	Signal status, description	
		0	No request
14	Parking encoder	1	Request parking encoder (handshake with Gn_ZSW bit 14)
		0	No request
15	Acknowledge encoder error	0/1	Request to reset encoder errors
			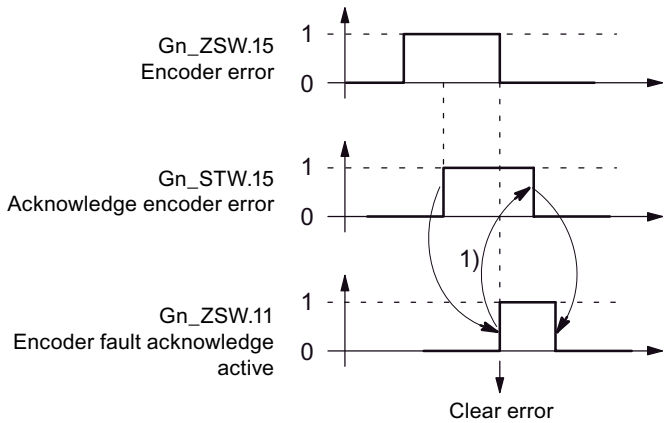 1) Signal must be reset by user.
		0	No request

Example 1: Find reference mark

Assumptions for the example:

- Distance-coded reference mark
- Two reference marks (function 1/function 2)
- Position control with encoder 1

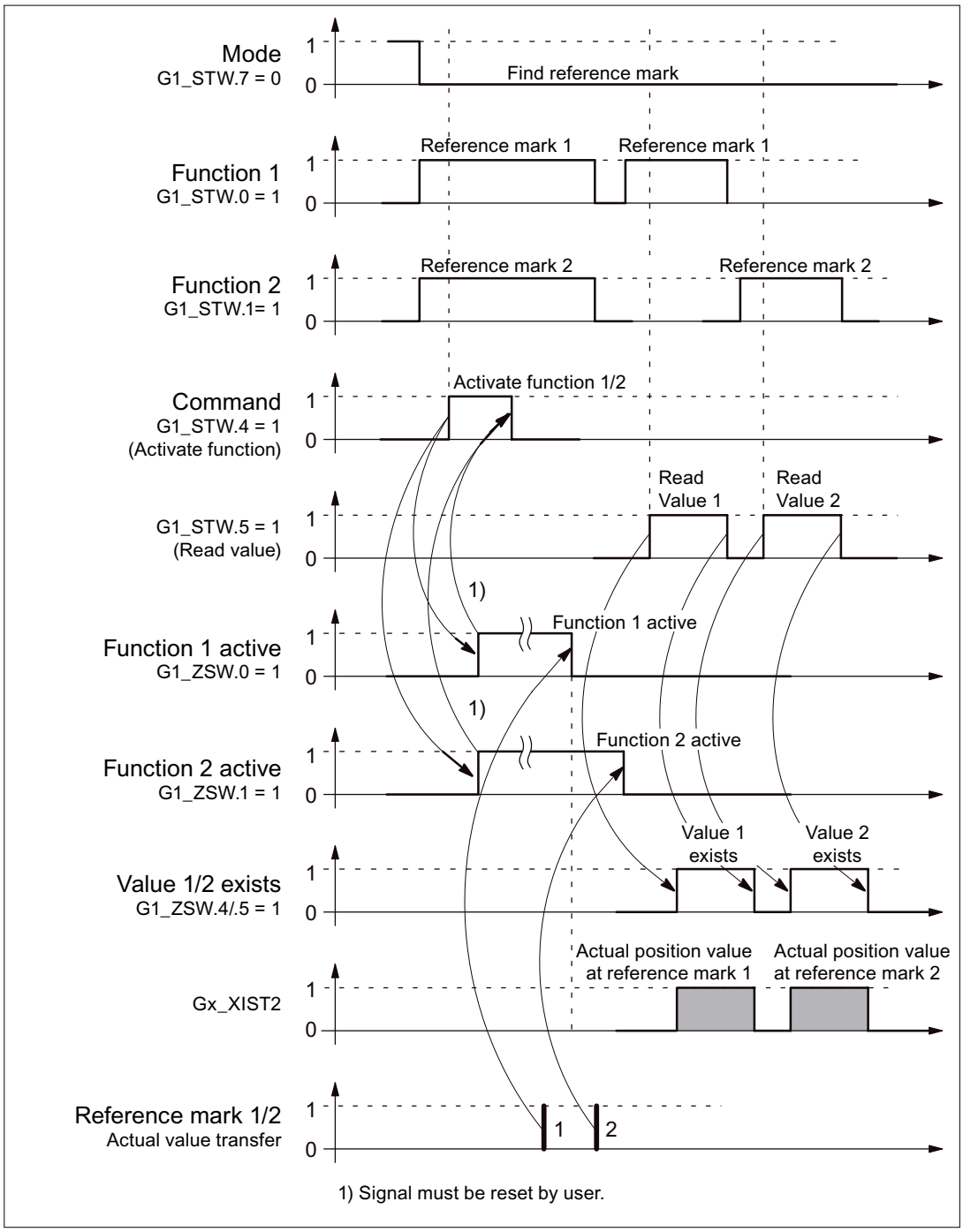

Figure 9-8 Sequence chart for "Find reference mark"

9.1.3.5 Example 2: Flying measurement

Example 2: Flying measurement

Assumptions for the example:

- Measuring probe with rising edge (function 1)
- Position control with encoder 1

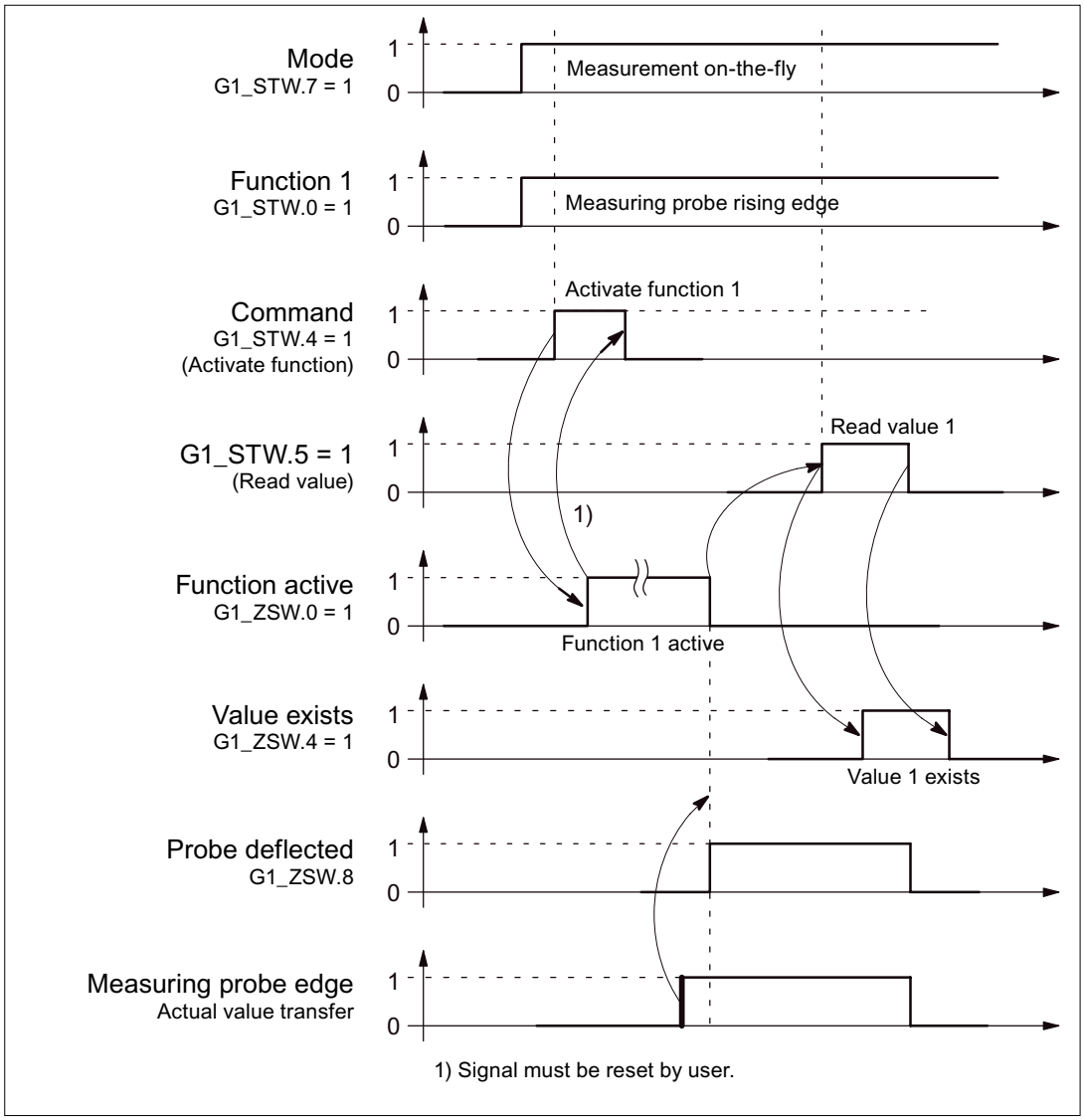

Figure 9-9 Sequence chart for "Flying measurement"

Encoder 2 control word (G2_STW)

- see G1_STW

Encoder n status word (Gn_ZSW, n = 1, 2)

The encoder status word is used to display states, errors and acknowledgements.

Table 9- 24 Description of the individual signals in Gn_ZSW

Bit	Name		Signal status, description		
0 1 2 3	"Find reference mark" or "Flying measurement"	Status: Function 1 - 4 active	Valid for "Find reference mark" and "Flying measurement"		
			Bit	Meaning	
			0	Function 1	Reference mark 1 Probe 1 rising edge
			1	Function 2	Reference mark 2 Probe 1 falling edge
			2	Function 3	Reference mark 3 Probe 2 rising edge
			3	Function 4	Reference mark 4 Probe 2 falling edge
			Note: • Bit x = 1 function active Bit x = 0 function inactive		
4 5 6 7		Status: Value 1 - 4 available	Valid for "Find reference mark" and "Flying measurement"		
			Bit	Meaning	
			4	Value 1	Reference mark 1 Probe 1 rising edge
			5	Value 2	Probe 1 falling edge
			6	Value 3	Probe 2 rising edge
			7	Value 4	Probe 2 falling edge
			Note: • Bit x = 1 value available Bit x = 0 value not available • Only one value can be fetched at a time. Reason: There is only one common status word Gn_XIST2 to read the values. • The probe must be configured to a "high-speed input" DI/DO on the Control Unit.		
8		Probe 1 deflected	1	Probe deflected (high signal)	
			0	Probe not deflected (low signal)	
9	Probe 2 deflected		1	Probe deflected (high signal)	
			0	Probe not deflected (low signal)	
10	Reserved		-		
11	Encoder fault acknowledge active		1	Encoder fault acknowledge active Note: See under STW.15 (acknowledge encoder error)	
			0	No acknowledgement active	

Bit	Name	Signal status, description	
12	Reserved	-	
13	Transmit absolute value cyclically	1	Acknowledgement for Gn_STW.13 (request absolute value cyclically) **Note:** Cyclic transmission of the absolute value can be interrupted by a function with higher priority. • See Gn_XIST2
		0	No acknowledgement
14	Parking encoder	1	Parking encoder active (i.e. parking encoder switched off)
		0	No active parking encoder
15	Encoder error	1	Error from encoder or actual-value sensing is active. **Note:** The error code is stored in Gn_XIST2.
		0	No error is active.

Encoder 1 actual position value 1 (G1_XIST1)

- Resolution: Encoder lines • 2n

  n: fine resolution, no. of bits for internal multiplication

  The fine resolution is specified via p0418.
- Used to transmit the cyclic actual position value to the controller.
- The transmitted value is a relative, free-running actual value.
- Any overflows must be evaluated by the master controller.

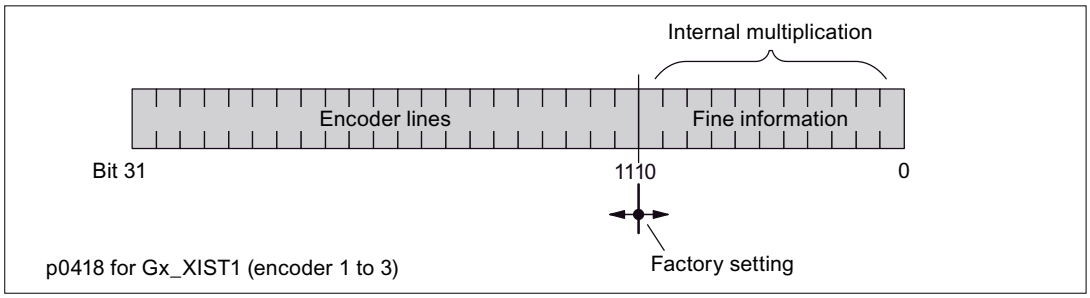

Figure 9-10 Subdivision and settings for Gx_XIST1

- Encoder lines of incremental encoder
  - For encoders with sin/cos 1Vpp:

    Encoder lines = no. of sinusoidal signal periods
- After power-up: Gx_XIST1 = 0
- An overflow in Gx_XIST1 must be viewed by the master controller.
- There is no modulo interpretation of Gx_XIST1 in the drive.

Encoder 1 actual position value 2 (G1_XIST2)

Different values are entered in Gx_XIST2 depending on the function.

- Priorities for Gx_XIST2

The following priorities should be considered for values in Gx_XIST2:

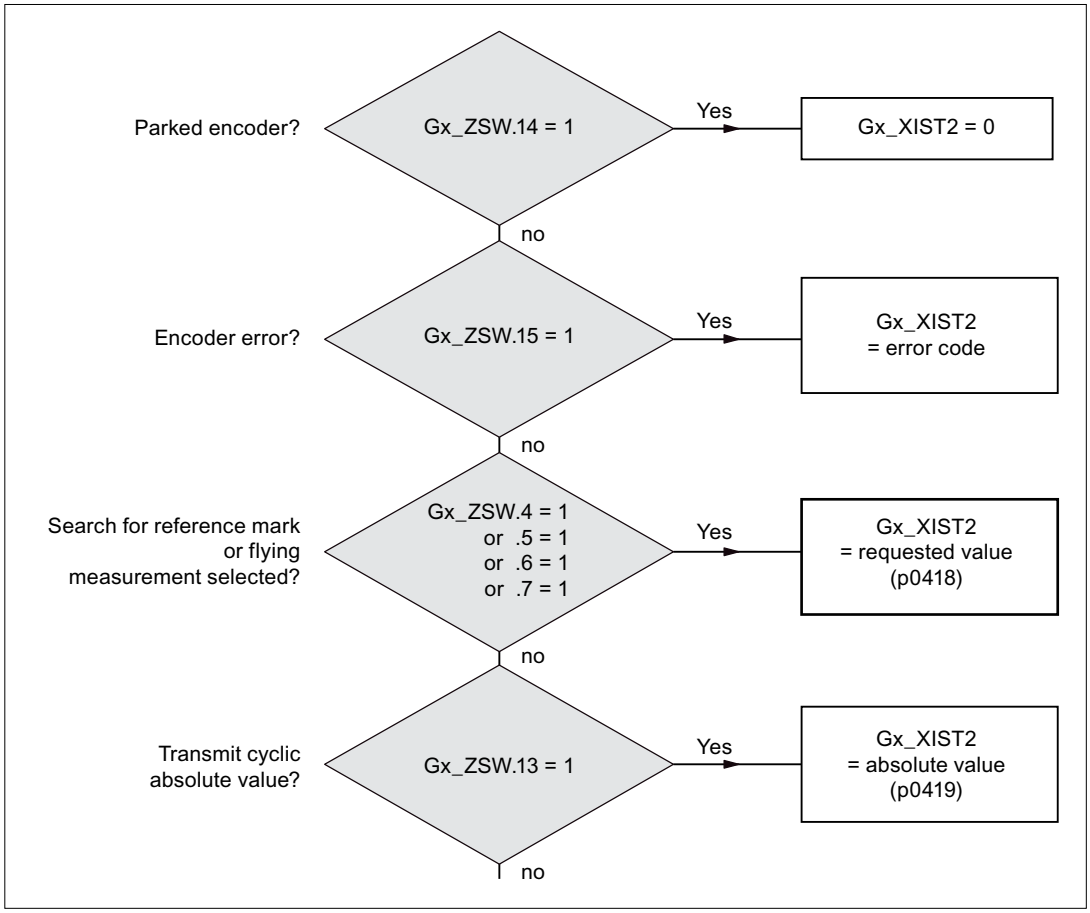

Figure 9-11 Priorities for functions and Gx_XIST2

- Resolution: Encoder pulses • 2n

  n: fine resolution, no. of bits for internal multiplication

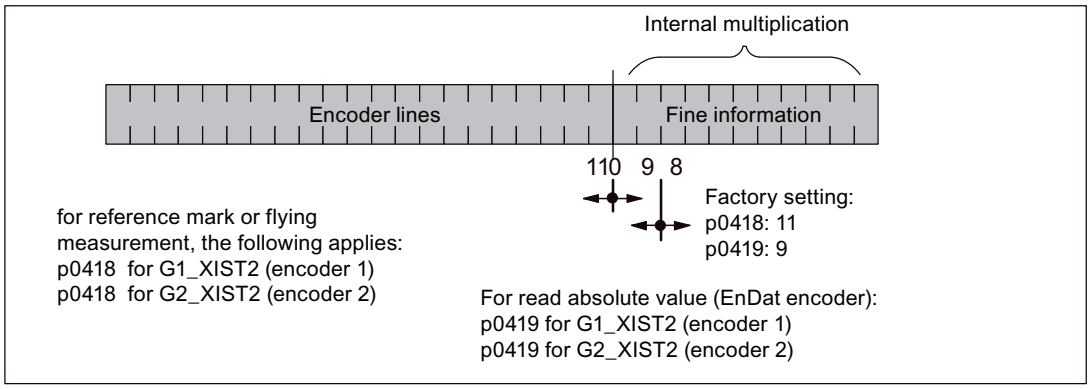

Figure 9-12 Subdivision and settings for Gx_XIST2

- Encoder lines of incremental encoder
  - For encoders with sin/cos 1Vpp:

    Encoder lines = no. of sinusoidal signal periods

Error code in Gn_XIST2

Table 9- 25 Error code in Gn_XIST2

n_XIST2	Meaning	Possible causes / description
1	Encoder error	One or more existing encoder faults. Detailed information in accordance with drive messages.
2	Zero marker monitoring	–
3	Abort parking sensor	• Parking drive object already selected.
4	Abort find reference mark	• A fault exists (Gn_ZSW.15 = 1) • Encoder has no zero marker (reference mark) • reference mark 2, 3 or 4 is requested • Switchover to "Flying measurement" during search for reference mark • Command "Read value x" set during search for reference mark • Inconsistent position measured value with distance-coded reference marks.
5	Abort, retrieve reference value	• More than four values requested • No value requested • Requested value not available
6	Abort flying measurement	• No probe configured p0488, p0489 • Switch over to "reference mark search" during flying measurement • Command "Read value x" set during flying measurement
7	Abort get measured value	• More than one value requested • No value requested. • Requested value not available • Parking encoder active • Parking drive object active
8	Abort absolute value transmission on	• Absolute encoder not available • Alarm bit absolute value protocol set
3841	Function not supported	–

Encoder 2 status word (G2_ZSW)

- See G1_ZSW (table 4-20)

Encoder 2 actual position value 1 (G2_XIST1)

- See G1_XIST1

Encoder 2 actual position value 2 (G2_XIST2)

- See G1_XIST2

Function diagrams (see SINAMICS S110 List Manual)

- 4720 Encoder interface, receive signals, encoders n
- 4730 Encoder interface, send signals, encoders n
- 4735 Find reference mark with equivalent zero mark, encoders n
- 4740 Measuring probe evaluation, measured value memory, encoders n

Overview of important parameters (see SINAMICS S110 List Manual)

Adjustable parameter drive, CU_S parameter is marked

- p0418[0...15] Fine resolution Gx_XIST1
- p0419[0...15] Fine resolution Gx_XIST2
- p0480[0...2] CI: Signal source for encoder control word Gn_STW
- p0488[0...2] Measuring probe 1 input terminal
- p0489[0...2] Measuring probe 2 input terminal
- p0490 Invert measuring probe (CU_S)

Display parameters drive

- r0481[0...2] CO: Encoder status word Gn_ZSW
- r0482[0...2] CO: Encoder position actual value Gn_XIST1
- r0483[0...2] CO: Encoder position actual value Gn_XIST2
- r0487[0...2] CO: Diagnostic encoder control word Gn_STW

9.1.3.6 Central control and status words

Description

The central process data exists for different telegrams. For example, telegram 391 is used for transferring measuring times and digital inputs/outputs.

The following central process data are available:

Receive signals:

- CU_STW1 Control Unit control word
- A_DIGITAL digital outputs
- MT_STW probe control word

Transmit signals:

- CU_ZSW1 Control Unit status word
- E_DIGITAL digital inputs
- MT_ZSW Probe status word
- MTn_ZS_F Probe n measuring time, falling edge (n = 1, 2)
- MTn_ZS_S Probe n measuring time, rising edge (n = 1, 2)

CU_STW1 (control word for Control Unit, CU)

See function diagram [2495].

Table 9- 26 Description of CU_STW1 (control word for Control Unit)

Bit	Meaning	Remarks		BICO
0	Synchronization flag	–	This signal is used to synchronize the joint system time between the controller and drive unit.	BI: p0681[0]
1	RTC PING	–	This signal is used to set the UTC time using the PING event.	BI: p3104
2...6	Reserved	–	–	–
7	Acknowledging faults	0/1	Acknowledging faults	BI: p2103
8...9	Reserved	–	–	–
10	Control taken over	0	External controller has no control via the CU Once the prevailing faults on all DOs have been acknowledged, the fault is also acknowledged implicitly on DO1 (CU).	p3116
		1	External controller has control via the CU The prevailing faults have to be acknowledged on all DOs and also explicitly on DO1 (CU).	
11	Reserved	–	–	–
12	Controller sign-of-life bit 0	–	Controller sign-of-life	CI: p2045
13	Controller sign-of-life bit 1	–		
14	Controller sign-of-life bit 2	–		
15	Controller sign-of-life bit 3	–		

A_DIGITAL (digital outputs)

This process data can be used to control the Control Unit outputs.
See function diagram [2497]

Table 9- 27 Description of A_DIGITAL (digital outputs)

Bit	Meaning	Remarks		BICO
0	Digital input/output 8 (DI/DO 8)	–	DI/DO 8 on the Control Unit must be parameterized as an output (p0728.8 = 1).	BI: p0738
1	Digital input/output 9 (DI/DO 9)	–	DI/DO 9 on the Control Unit must be parameterized as an output (p0728.9 = 1).	BI: p0739
2	Digital input/output 10 (DI/DO 10)	–	DI/DO 10 on the Control Unit must be parameterized as an output (p0728.10 = 1).	BI: p0740
3	Digital input/output 11 (DI/DO 11)	–	DI/DO 11 on the Control Unit must be parameterized as an output (p0728.11 = 1).	BI: p0741
4... 15	Reserved	–	–	–
Note: The bidirectional digital inputs/outputs (DI/DO) can be connected as either an input or an output (see also transmit signal E_DIGITAL).				

MT_STW

Control word for the "central probe" function. Display via r0685.

Table 9- 28 Description of MT_STW (control word for Control Unit)

Bit	Meaning	Remarks		BICO
0	Falling edge probe 1	–	Activation of measuring time determination with the next falling edge	CI: p0682
1	Falling edge probe 2	–		
2	Falling edge probe 3	–		
3	Falling edge probe 4	–		
4	Falling edge probe 5	–		
5	Falling edge probe 6	–		
6...7	Reserved	–	–	
8	Rising edge probe 1	–	Activation of measuring time determination with the next rising edge	
9	Rising edge probe 2	–		
10	Rising edge probe 3	–		
11	Rising edge probe 4	–		
12	Rising edge probe 5	–		
13	Rising edge probe 6	–		
14.. 15	Reserved	–	–	

CU_ZSW1 (status word of the DO1 telegram (telegrams 39x))

See function diagram [2496].

Table 9- 29 Description of CU_ZSW1 (status word of the CU)

Bit	Meaning	Remarks		BICO
0...3	Reserved	–	–	-
3	Fault active	1	Drive object: Device (CU)	BO: r2139.3
		0		
4..5	Reserved	–	–	-
6	Ready to start	Central "ready for switching on" state of the drive unit		BO: r899.0
		1	Device is in the "not ready for switching on" state	
		0	Device is in the "ready for switching on" state	
7	Alarm present	1	Alarm pending	BO: 2139.7
		0	No warning	
8	Synchronization (SYNC)	–	–	BO: r0899.8
9	Alarm pending	1	No alarm pending	BO: r3114.9
		0	Alarm pending	
10	Fault pending	1	No fault pending	BO: r3114.10
		0	Fault pending	
11	Safety signal pending	1	No safety signal pending	BO: r3114.11
		0	Safety signal pending	
12	Slave sign of life bit 0	1-15	Cyclic advance	Implicitly interconnected
		0	Initialization, no sign of life available	
13	Slave sign of life bit 1	1-15		
		0		
14	Slave sign of life bit 2	1-15		
		0		
15	Slave sign of life bit 3	1-15		
		0		

E_DIGITAL (digital inputs)

See function diagram [2498].

Table 9- 30 Description of E_DIGITAL (digital inputs)

Bit	Meaning	Remarks		BICO
0	Digital input/output 8 (DI/DO = 8)	–	DI/DO 8 on the Control Unit must be parameterized as an input (p0728.8 = 0).	BO: p0722.8
1	Digital input/output 9 (DI/DO = 9)	–	DI/DO 9 on the Control Unit must be parameterized as an input (p0728.9 = 0).	BO: p0722.9
2	Digital input/output 10 (DI/DO = 10)	–	DI/DO 10 on the Control Unit must be parameterized as an input (p0728.10 = 0).	BO: p0722.10
3	Digital input/output 11 (DI/DO = 11)	–	DI/DO 11 on the Control Unit must be parameterized as an input (p0728.11 = 0).	BO: p0722.11
4...7	Reserved	–	–	–
8	Digital input 0 (DI 0)	–	Digital input DI 0 on the Control Unit	BO: r0722.0
9	Digital input 1 (DI 1)	–	Digital input DI 1 on the Control Unit	BO: r0722.1
10	Digital input 2 (DI 2)	–	Digital input DI 2 on the Control Unit	BO: r0722.2
11	Digital input 3 (DI 3)	–	Digital input DI 3 on the Control Unit	BO: r0722.3
12...15	Reserved	–	–	–
Note: The bidirectional digital inputs/outputs (DI/DO) can be connected as either an input or an output (see also receive signal A_DIGITAL).				

MT_ZSW

Status word for the "central probe" function.

Table 9- 31 Description of MT_ZSW (status word for the "central probe" function)

Bit	Meaning	Remarks		BICO
0	Digital input probe 1	–	Digital input display	CO: r0688
1	Digital input probe 2	–		
2	Digital input probe 3	–		
3	Digital input probe 4	–		
4	Digital input probe 5	–		
5	Digital input probe 6	–		
6...7	Reserved	–	–	
8	Sub-sampling probe 1	–	Not yet carried out.	
9	Sub-sampling probe 2	–		
10	Sub-sampling probe 3	–		
11	Sub-sampling probe 4	–		
12	Sub-sampling probe 5	–		
13	Sub-sampling probe 6	–		
14...15	Reserved	–	–	

MTn_ZS_F and MTn_ZS_S

Display of the measuring time determined

The measuring time is specified as a 16-bit value with a resolution of 0.25 µs.

Features of the central probe

- The time stamps from probes in more than one drive can be transferred simultaneously in a single telegram.
- The time in the controller and drive unit is synchronized via CU_STW1 and the CU_ZSW1.
  Note: The controller must support time synchronization!
- A higher-level controller can then use the time stamp to determine the actual position value of more than one drive.
- The system outputs a message if the measuring time determination function in the probe is already in use (see also p0488, p0489, and p0580).

Example: central probe

Assumptions for the example:

- Determination of the time stamp MT1_ZS_S by evaluating the rising edge of probe 1
- Determination of the time stamp MT2_ZS_S and MT2_ZS_F by evaluating the rising and falling edge of probe 2
- Probe 1 on DI/DO 9 of the Control Unit (p0680[0] = 1)
- Probe 2 on DI/DO 10 of the Control Unit (p0680[1] = 2)
- Manufacturer-specific telegram p0922 = 391 is set.

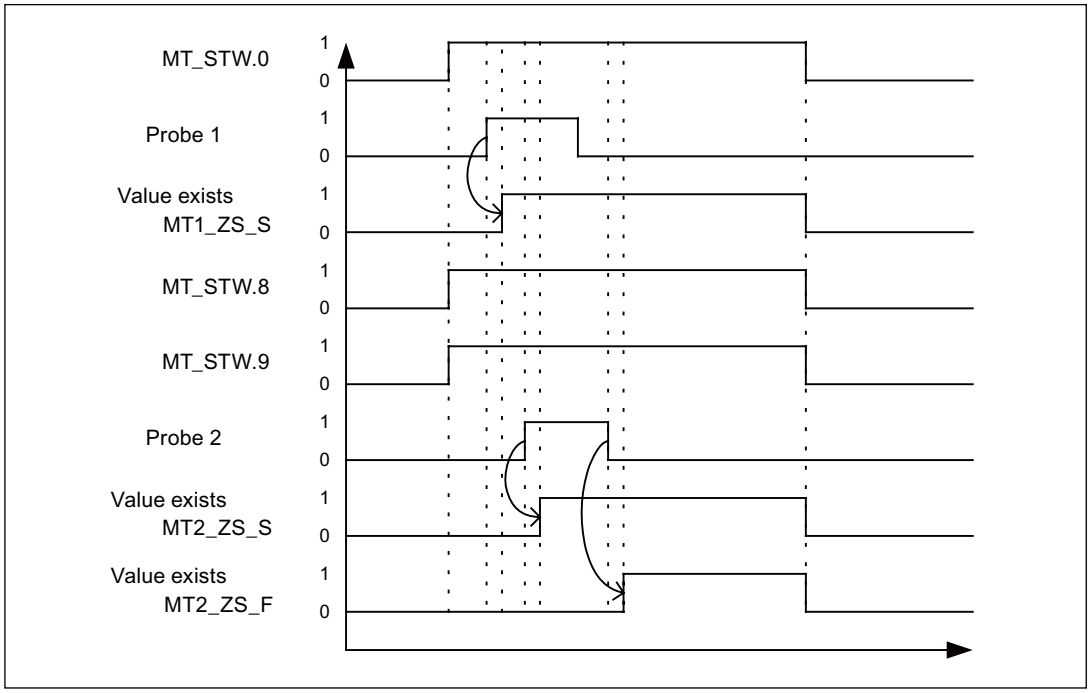

Figure 9-13 Sequence chart for central probe example

9.1.3.7 Motion Control with PROFIdrive

Description

The "Motion control with PROFIBUS" or "Motion Control with PROFINET" function can be used to implement an isochronous drive link between a master and one or more slaves via the PROFIBUS field bus or an isochronous drive link via PROFINET.

Note

The isochronous drive link is defined in the following documentation:
Reference: /P5/ PROFIdrive Profile Drive Technology

Properties

- No additional parameters need to be entered in addition to the bus configuration in order to activate this function, the master and slave must only be preset for this function (PROFIBUS).
- The master-side default setting is made via the hardware configuration, e.g. B. HWConfig with SIMATIC S7. The slave-side default setting is made via the parameterization telegram when the bus is ramping up.
- Fixed sampling times are used for all data communication.
- The Global Control (GC) clock information on PROFIBUS is transmitted before the beginning of each cycle.
- The length of the clock cycle depends on the bus configuration. When the clock cycle is selected, the bus configuration tool (e.g. HWConfig) supports:
  - High number of drives per slave/drive unit -> long cycle
  - High number of slaves/drive units -> long cycle
- A sign-of-life counter is used to monitor user data transfer and clock pulse failures.

Overview of closed-loop control

- Sensing of the actual position value on the slave can be performed using:
  - Indirect measuring system (motor encoder)
  - Additional direct measuring system
- The encoder interface must be configured in the process data.
- The control loop is closed via the PROFIBUS.
- The position controller is located on the master.
- The current and speed control systems and actual value sensing (encoder interface) are located on the slave.
- The position controller clock cycle is transmitted across the field bus to the slaves.

- The slaves synchronize their speed and/or current controller cycle with the position controller cycle on the master.
- The speed setpoint is specified by the master.

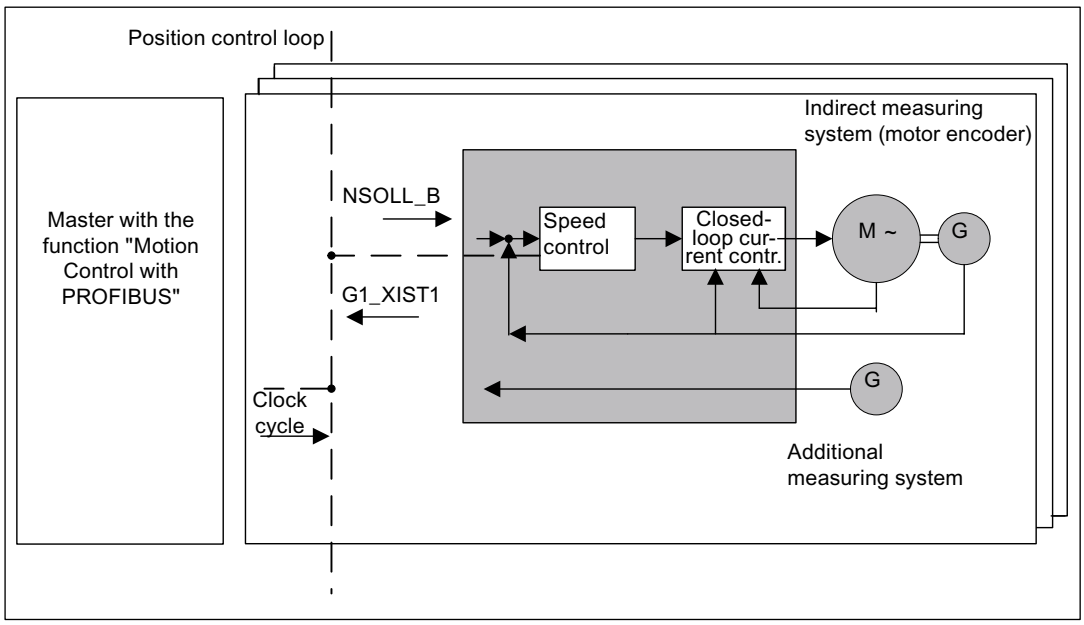

Figure 9-14 Overview of "Motion control with PROFIBUS" (example: master and 3 slaves)

Structure of the data cycle

The data cycle comprises the following elements:

1. Global Control telegram (PROFIBUS only)
2. Cyclic part
   – Setpoints and actual values
3. Acyclic part
   – Parameters and diagnostic data
4. Reserve (PROFIBUS only)
   – Transmission of token (TTH).
   – For searching for a new node in the drive line-up (GAP)
   – Waiting time until next cycle

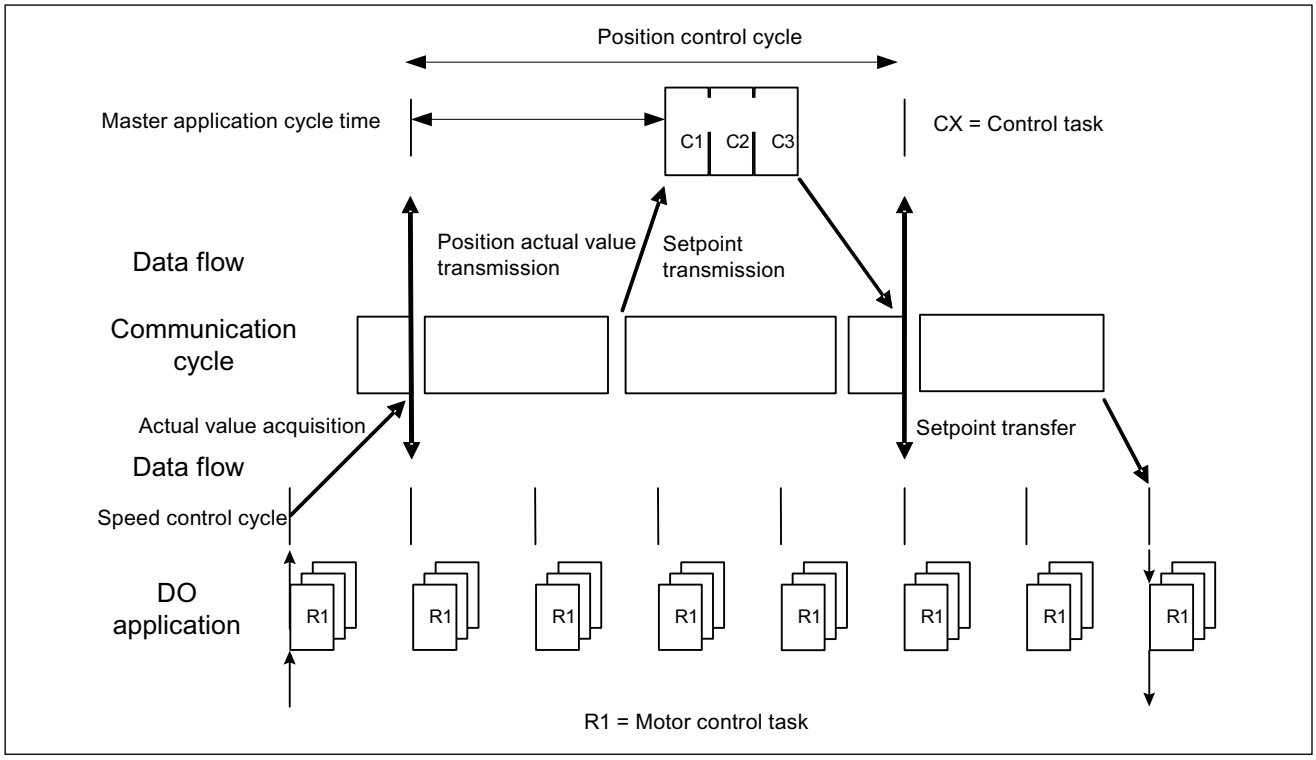

Figure 9-15 Isochronous drive link/Motion Control with PROFIdrive

9.1.4 Acyclic communication

9.1.4.1 General information about acyclic communication

Description

With acyclic communication, as opposed to cyclic communication, data transfer takes place only when an explicit request is made (e.g. in order to read and write parameters).

The read data set/write data set services are available for acyclic communication.

The following options are available for reading and writing parameters:

- S7 protocol

  This protocol uses the STARTER commissioning tool, for example, in online mode via PROFIBUS.

- PROFIdrive parameter channel with the following data set:
  - PROFIBUS: Data block 47 (0x002F)

    The DPV1 services are available for master class 1 and class 2.

Note

Please refer to the following documentation for a detailed description of acyclic communication:
Reference: PROFIdrive Profile V4.1, May 2006, Order No: 3.172

Addressing:

PROFIBUS DP, the addressing can either take the form of the logical address or the diagnostics address.

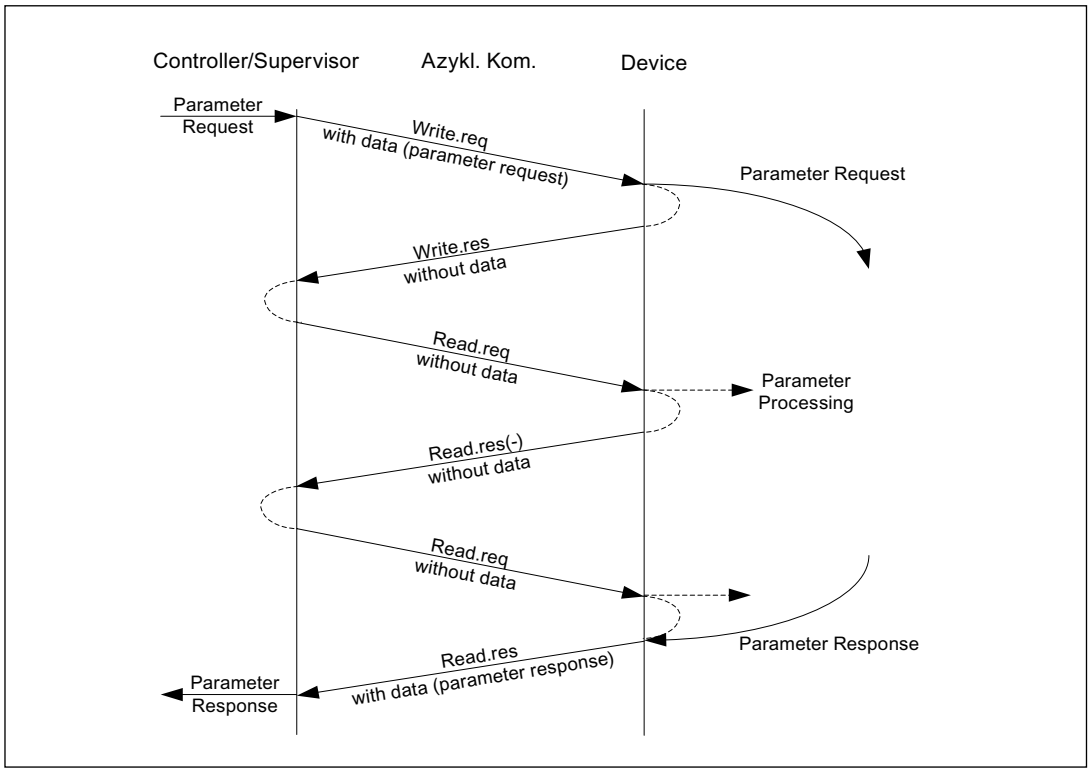

Figure 9-16 Reading and writing data

Characteristics of the parameter channel

- One 16-bit address each for parameter number and subindex.
- Concurrent access by several PROFIBUS masters (master class 2).
- Transfer of different parameters in one access (multiple parameter request).
- Transfer of complete arrays or part of an array possible.
- Only one parameter request is processed at a time (no pipelining).
- A parameter request/response must fit into a data set (max. 240 bytes).
- The task or response header are user data.

9.1.4.2 Structure of orders and responses

Structure of parameter request and parameter response

	Parameter request			Offset
Values for write access only	Request header	Request reference	Request ID	0
		Axis	No. of parameters	2
	1. parameter address	Attribute	No. of elements	4
		Parameter number		6
		Subindex		8
	...			
	nth parameter address	Attribute	No. of elements	
		Parameter number		
		Subindex		
	1. parameter value(s)	Format	No. of values	
		Values		
		...		
	...			
	nth parameter value(s)	Format	No. of values	
		Values		
		...		

	Parameter response			Offset
Values for read access only Error values for negative response only	Response header	Request reference mirrored	Response ID	0
		Axis mirrored	No. of parameters	2
	1. parameter value(s)	Format	No. of values	4
		Values or error values		6
		...		
	...			
	nth parameter value(s)	Format	No. of values	
		Values or error values		
		...		

Description of fields in DPV1 parameter request and response

Field	Data type	Values	Remark
Request reference	Unsigned8	0x01 ... 0xFF	
	Unique identification of the request/response pair for the master. The master changes the request reference with each new request. The slave mirrors the request reference in its response.		
Request ID	Unsigned8	0x01 0x02	Read request Write request
	Specifies the type of request. In the case of a write request, the changes are made in a volatile memory (RAM). A save operation is needed in order to transfer the data to the non-volatile memory (p0977).		
Response ID	Unsigned8	0x01 0x02 0x81 0x82	Read request (+) Write request (+) Read request (-) Write request (-)
	Mirrors the request identifier and specifies whether request execution was positive or negative. Negative means: Cannot execute part or all of request. The error values are transferred instead of the values for each subresponse.		
Drive object number	Unsigned8	0x00 ... 0xFF	Number
	Setting for the drive object number with a drive unit with more than one drive object. Different drive objects with separate parameter number ranges can be accessed over the same DPV1 connection.		
No. of parameters	Unsigned8	0x01 ... 0x27	No. 1 ... 39 Limited by DPV1 telegram length
	Defines the number of adjoining areas for the parameter address and/or parameter value for multi-parameter requests. The number of parameters = 1 for single requests.		
Attribute	Unsigned8	0x10 0x20 0x30	Value Description Text (not implemented)
	Type of parameter element accessed.		
No. of elements	Unsigned8	0x00 0x01 ... 0x75	Special function No. 1 ... 117 Limited by DPV1 telegram length
	Number of array elements accessed.		
Parameter number	Unsigned16	0x0001 ... 0xFFFF	No. 1 ... 65535
	Addresses the parameter accessed.		
Subindex	Unsigned16	0x0000 ... 0xFFFF	No. 0 ... 65535
	Addresses the first array element of the parameter to be accessed.		

Field	Data type	Values	Remark
Format	Unsigned8	0x02 0x03 0x04 0x05 0x06 0x07 0x08 Other values 0x40 0x41 0x42 0x43 0x44	Data type integer8 Data type integer16 Data type integer32 Data type unsigned8 Data type unsigned16 Data type unsigned32 Data type floating point See PROFIdrive profile V3.1 Zero (without values as a positive subresponse to a write request) Byte Word Double word Error
	The format and number specify the adjoining space containing values in the telegram. Data types in conformity with PROFIdrive Profile shall be preferred for write access. Bytes, words and double words are also possible as a substitute.		
No. of values	Unsigned8	0x00 ... 0xEA	No. 0 ... 234 Limited by DPV1 telegram length
	Specifies the number of subsequent values.		
Error values	Unsigned16	0x0000 ... 0x00FF	Meaning of error value --> see table 4-29
	The error values in the event of a negative response. If the values make up an odd number of bytes, a zero byte is appended. This ensures the integrity of the word structure of the telegram.		
Values	Unsigned16	0x0000 ... 0x00FF	
	The values of the parameter for read or write access. If the values make up an odd number of bytes, a zero byte is appended. This ensures the integrity of the word structure of the telegram.		

Error values in DPV1 parameter responses

Table 9- 32 Error values in DPV1 parameter responses

Error value	Meaning	Remark	Additional info
0x00	Illegal parameter number	Access to a parameter which does not exist.	–
0x01	Parameter value cannot be changed	Modification access to a parameter value which cannot be changed.	Subindex
0x02	Lower or upper value limit exceeded	Modification access with value outside value limits.	Subindex
0x03	Invalid subindex	Access to a subindex which does not exist.	Subindex
0x04	No array	Access with subindex to an unindexed parameter.	–
0x05	Wrong data type	Modification access with a value which does not match the data type of the parameter.	–
0x06	Illegal set operation (only reset allowed)	Modification access with a value not equal to 0 in a case where this is not allowed.	Subindex
0x07	Description element cannot be changed	Modification access to a description element which cannot be changed.	Subindex
0x09	No description data	Access to a description which does not exist (the parameter value exists).	–
0x0B	No operating priority	Modification access with no operating priority.	–
0x0F	No text array exists	Access to a text array which does not exist (the parameter value exists).	–
0x11	Request cannot be executed due to operating status	Access is not possible temporarily for unspecified reasons.	–
0x14	Illegal value	Modification access with a value which is within the limits but which is illegal for other permanent reasons (parameter with defined individual values).	Subindex
0x15	Response too long	The length of the present response exceeds the maximum transfer length.	–
0x16	Illegal parameter address	Impermissible or unsupported value for attribute, number of elements, parameter number, subindex or a combination of these.	–
0x17	Illegal format	Write request: illegal or unsupported parameter data format	–
0x18	No. of values inconsistent	Write request: a mismatch exists between the number of values in the parameter data and the number of elements in the parameter address.	–
0x19	Drive object does not exist	You have attempted to access a drive object that does not exist.	–
0x65	Presently deactivated.	You have tried to access a parameter that, although available, is currently inactive (e.g. n control set and access to parameter from V/f control).	–
0x6B	Parameter %s [%s]: no write access for the enabled controller	–	–
0x6C	Parameter %s [%s]: unit unknown	–	–
0x6D	Parameter %s [%s]: Write access only in the commissioning state, encoder (p0010 = 4).	–	–

Error value	Meaning	Remark	Additional info
0x6E	Parameter %s [%s]: Write access only in the commissioning state, motor (p0010 = 3).	–	–
0x6F	Parameter %s [%s]: Write access only in the commissioning state, power unit (p0010 = 2).	–	–
0x70	Parameter %s [%s]: Write access only in the quick commissioning mode (p0010 = 1).	–	–
0x71	Parameter %s [%s]: Write access only in the ready mode (p0010 = 0).	–	–
0x72	Parameter %s [%s]: Write access only in the commissioning state, parameter reset (p0010 = 30).	–	–
0x73	Parameter %s [%s]: Write access only in the commissioning state, Safety (p0010 = 95).	–	–
0x74	Parameter %s [%s]: Write access only in the commissioning state, tech. application/units (p0010 = 5).	–	–
0x75	Parameter %s [%s]: Write access only in the commissioning state (p0010 not equal to 0).	–	–
0x76	Parameter %s [%s]: Write access only in the commissioning state, download (p0010 = 29).	–	–
0x77	Parameter %s [%s] may not be written in download.	–	–
0x78	Parameter %s [%s]: Write access only in the commissioning state, drive configuration (device: p0009 = 3).	–	–
0x79	Parameter %s [%s]: Write access only in the commissioning state, define drive type (device: p0009 = 2).	–	–
0x7A	Parameter %s [%s]: Write access only in the commissioning state, data set basis configuration (device: p0009 = 4).	–	–
0x7B	Parameter %s [%s]: Write access only in the commissioning state, device configuration (device: p0009 = 1).	–	–
0x7C	Parameter %s [%s]: Write access only in the commissioning state, device download (device: p0009 = 29).	–	–
0x7D	Parameter %s [%s]: Write access only in the commissioning state, device parameter reset (device: p0009 = 30).	–	–

Error value	Meaning	Remark	Additional info
0x7E	Parameter %s [%s]: Write access only in the commissioning state, device ready (device: p0009 = 0).	–	–
0x7F	Parameter %s [%s]: Write access only in the commissioning state, device (device: p0009 not 0).	–	–
0x81	Parameter %s [%s] may not be written in download.	–	–
0x82	Transfer of the control authority (master) is inhibited by BI: p0806.	–	–
0x83	Parameter %s [%s]: requested BICO interconnection not possible	BICO output does not supply float values. The BICO input, however, requires a float value.	–
0x84	Parameter %s [%s]: parameter change inhibited (refer to p0300, p0400, p0922)	–	–
0x85	Parameter %s [%s]: access method not defined.	–	–
0xC8	Below the valid values.	Modification request for a value that, although within "absolute" limits, is below the currently valid lower limit.	–
0xC9	Above the valid values.	Modification request for a value that, although within "absolute" limits, is below the currently valid lower limit (e.g. governed by the current converter rating).	–
0xCC	Write access not permitted.	Write access is not permitted because an access key is not available.	–

9.1.4.3 Determining the drive object numbers

Further information about the drive system (e.g. drive object numbers) can be determined as follows using parameters p0101 and r0102:

1. The value of parameter r0102 ("Number of drive objects") for drive object/axis 1 is read via a read request.

   Drive object 1 is the Control Unit (CU), which is a minimum requirement for each drive system.

2. Depending on the result of the initial read request, further read requests for drive object 1 are used to read the indices for parameter p0101 ("Drive object numbers"), as specified by parameter r0102.

   Example:
   If the number of drive objects is "5", the values for indices 0 to 4 for parameter p0101 are read. Of course, the relevant indexes can also be read at once.

9.1.4.4 Example 1: read parameters

Prerequisites

1. The PROFIdrive controller has been commissioned and is fully operational.
2. PROFIdrive communication between the controller and the device is operational.
3. The controller can read and write data sets in conformance with PROFIdrive DPV1.

Task description

Following the occurrence of at least one fault (ZSW1.3 = "1") on drive 2 (also drive object number 2), the active fault codes must be read from the fault buffer r0945[0] ... r0945[7].

The request is to be handled using a request and response data block.

Basic procedure

1. Create a request to read the parameters.
2. Invoke the request.
3. Evaluate the response.

Activity

1. Create the request.

Parameter request			Offset
Request header	Request reference = 25 hex	Request ID = 01 hex	0 + 1
	Axis = 02 hex	No. of parameters = 01 hex	2 + 3
parameter address	Attribute = 10 hex	No. of elements = 08 hex	4 + 5
	Parameter no. = 945 dec		6
	Subindex = 0 dec		8

Information about the parameter request:

- Request reference:

  The value is selected at random from the valid value range. The request reference establishes the relationship between request and response.
- Request ID:

  01 hex —> This identifier is required for a read request.
- Axis:

  02 hex —> Drive 2, fault buffer with drive- and device-specific faults
- No. of parameters:

  01 hex —> One parameter is read.

- Attribute:

  10 hex —> The parameter values are read.
- No. of elements:

  08 hex —> The current fault incident with 8 faults is to be read.
- Parameter number:

  945 dec —> p0945 (fault code) is read.
- Subindex:

  0 dec —> Read access starts at index 0.

1. Invoke the parameter request.

   If ZSW1.3 = "1" —> Invoke parameter request
2. Evaluate the parameter response.

Parameter response			Offset
Response header	Request reference mirrored = 25 hex	Response ID = 01 hex	0 + 1
	Axis mirrored = 02 hex	No. of parameters = 01 hex	2 + 3
Parameter value	Format = 06 hex	No. of values = 08 hex	4 + 5
	1. value = 1355 dec		6
	2. value = 0 dec		8
	...		...
	8. value = 0 dec		20

Information about the parameter response:

- Request reference mirrored:

  This response belongs to the request with request reference 25.
- Response ID:

  01 hex —> Read request positive, values stored as of 1st value
- Axis mirrored, no. of parameters:

  The values correspond to the values from the request.
- Format:

  06 hex —> Parameter values are in Unsigned16 format.
- No. of values:

  08 hex —> 8 parameter values are available.
- 1. value ... 8th value

  A fault is only entered in value 1 of the fault buffer for drive 2.

9.1.4.5 Example 2: write parameters (multi-parameter request)

Requirements

1. The PROFIdrive controller has been commissioned and is fully operational.
2. PROFIdrive communication between the controller and the device is operational.
3. The controller can read and write data sets in conformance with PROFIdrive DPV1.

   Special requirements for this example:
4. Control type: Servo with activated "Extended setpoint channel" function module

Task description

Jog 1 and 2 are to be set up for drive 2 (also drive object number 2) via the input terminals of the Control Unit. A parameter request is to be used to write the corresponding parameters as follows:

- BI: p1055 = r0722.3 — Jog bit 0
- BI: p1056 = r0722.4 — Jog bit 1
- p1058 = 300 1/min — Jog 1 speed setpoint
- p1059 = 600 1/min — Jog 2 speed setpoint

The request is to be handled using a request and response data block.

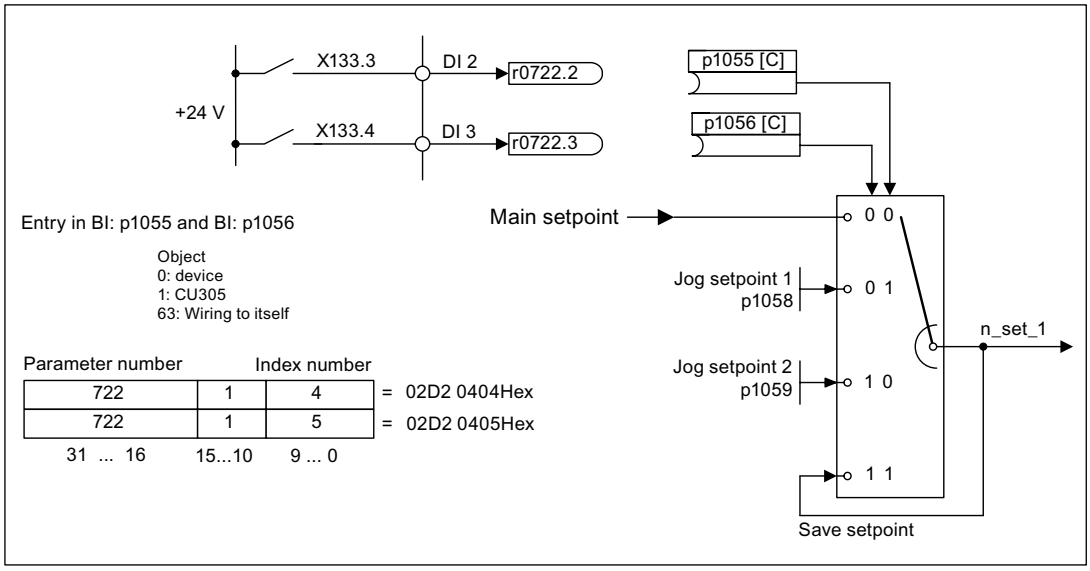

Figure 9-17 Task description for multi-parameter request (example)

Basic procedure

1. Create a request to write the parameters.
2. Invoke the request.
3. Evaluate the response.

Activity

1. Create the request.

Parameter request			Offset
Request header	Request reference = 40 hex	Request ID = 02 hex	0 + 1
	Axis = 02 hex	No. of parameters = 04 hex	2 + 3
1. parameter address	Attribute = 10 hex	No. of elements = 01 hex	4 + 5
	Parameter no. = 1055 dec		6
	Subindex = 0 dec		8
2. parameter address	Attribute = 10 hex	No. of elements = 01 hex	10 + 11
	Parameter no. = 1056 dec		12
	Subindex = 0 dec		14
3. parameter address	Attribute = 10 hex	No. of elements = 01 hex	16 + 17
	Parameter no. = 1058 dec		18
	Subindex = 0 dec		20
4. parameter address	Attribute = 10 hex	No. of elements = 01 hex	22 + 23
	Parameter no. = 1059 dec		24
	Subindex = 0 dec		26
4. parameter address	Attribute = 10 hex	No. of elements = 01 hex	22 + 23
	Parameter no. = 1059 dec		24
	Subindex = 0 dec		26
4. parameter address	Attribute = 10 hex	No. of elements = 01 hex	22 + 23
	Parameter no. = 1059 dec		24
	Subindex = 0 dec		26
1. parameter value(s)	Format = 07 hex	No. of values = 01 hex	28 + 29
	Value = 02D2 hex		30
	Value = 0404 hex		32
2. parameter value(s)	Format = 07 hex	No. of values = 01 hex	34 + 35
	Value = 02D2 hex		36
	Value = 0405 hex		38
3. parameter value(s)	Format = 08 hex	No. of values = 01 hex	40 + 41
	Value = 4396 hex		42
	Value = 0000 hex		44
4. parameter value(s)	Format = 08 hex	No. of values = 01 hex	46 + 47
	Value = 4416 hex		48
	Value = 0000 hex		50

Information about the parameter request:

- Request reference:

  The value is selected at random from the valid value range. The request reference establishes the relationship between request and response.
- Request ID:

  02 hex —> This identifier is required for a write request.
- Axis:

  02 hex —> The parameters are written to drive 2.
- No. of parameters

  04 hex —> The multi-parameter request comprises 4 individual parameter requests.

1. parameter address ... 4th parameter address

- Attribute:

  10 hex —> The parameter values are to be written.
- No. of elements

  01 hex —> 1 array element is written.
- Parameter number

  Specifies the number of the parameter to be written (p1055, p1056, p1058, p1059).
- Subindex:

  0 dec —> ID for the first array element.

1. parameter value ... 4th parameter value

- Format:

  07 hex —> Data type Unsigned32

  08 hex —> Data type FloatingPoint
- No. of values:

  01 hex —> A value is written to each parameter in the specified format.
- Value:

  BICO input parameter: enter signal source.

  Adjustable parameter: enter value

2. Invoke the parameter request.
3. Evaluate the parameter response.

Parameter response			Offset
Response header	Request reference mirrored = 40 hex	Response ID = 02 hex	0
	Axis mirrored = 02 hex	No. of parameters = 04 hex	2

Information about the parameter response:

- Request reference mirrored:

  This response belongs to the request with request reference 40.
- Response ID:

  02 hex —> Write request positive
- Axis mirrored:

  02 hex —> The value matches the value from the request.
- No. of parameters:

  04 hex —> The value matches the value from the request.

9.2 Communication via PROFIBUS DP

9.2.1 General information about PROFIBUS

9.2.1.1 General information about PROFIBUS for SINAMICS

General information

PROFIBUS is an open international field bus standard for a wide range of production and process automation applications.

The following standards ensure open, multi-vendor systems:

- International standard EN 50170
- International standard IEC 61158

PROFIBUS is optimized for high-speed, time-critical data communication at field level.

Note

PROFIBUS for drive technology is standardized and described in the following document:
Reference: /P5/ PROFIdrive Profile Drive Technology

CAUTION

Before synchronizing to the isochronous PROFIBUS, all of the pulses of the drive objects must be inhibited - also for those drives that are not controlled via PROFIBUS.

⚠ CAUTION

No CAN cables must be connected to interface X126. If CAN cables are connected, the CU305 and other CAN bus nodes could be seriously damaged.

Master and slave

- Master and slave properties

Table 9- 33 Master and slave properties

Properties	Master	Slave
As bus node	Active	Passive
Send messages	Permitted without external request	Only possible on request by master
Receive messages	Possible with no restrictions	Only receive and acknowledge permitted

- Master

  Masters are categorized into the following classes:

  – Master class 1 (DPMC1):

    Central automation stations that exchange data with the slaves in cyclic and acyclic mode. Communication between the masters is also possible.

    Examples: SIMATIC S7, SIMOTION

  – Master class 2 (DPMC2):

    Devices for configuration, commissioning, operator control and monitoring during bus operation. Devices that only exchange data with the slaves in acyclic mode.

    Examples: Programming devices, human machine interfaces

- Slaves

  With respect to PROFIBUS, the SINAMICS drive unit is a slave.

Bus access method

PROFIBUS uses the token passing method, i.e. the active stations (masters) are arranged in a logical ring in which the authorization to send is received within a defined time frame.

Within this time frame, the master with authorization to send can communicate with other masters or handle communication with the assigned slaves in a master/slave procedure.

PROFIBUS telegram for cyclic data transmission and acyclic services

Each drive unit that supports cyclic process data exchange uses a telegram to send and receive all the process data. A separate telegram is sent in order to perform all the acyclic services (read/write parameters) under a single PROFIBUS address. The acyclic data is transmitted with a lower priority after cyclic data transmission.

The overall length of the telegram increases with the number of drive objects that are involved in exchanging process data.

9.2.2 Commissioning PROFIBUS

9.2.2.1 General information about commissioning

Interfaces and diagnostic LED

A PROFIBUS interface with LEDs and address switches is available on the Control Unit.

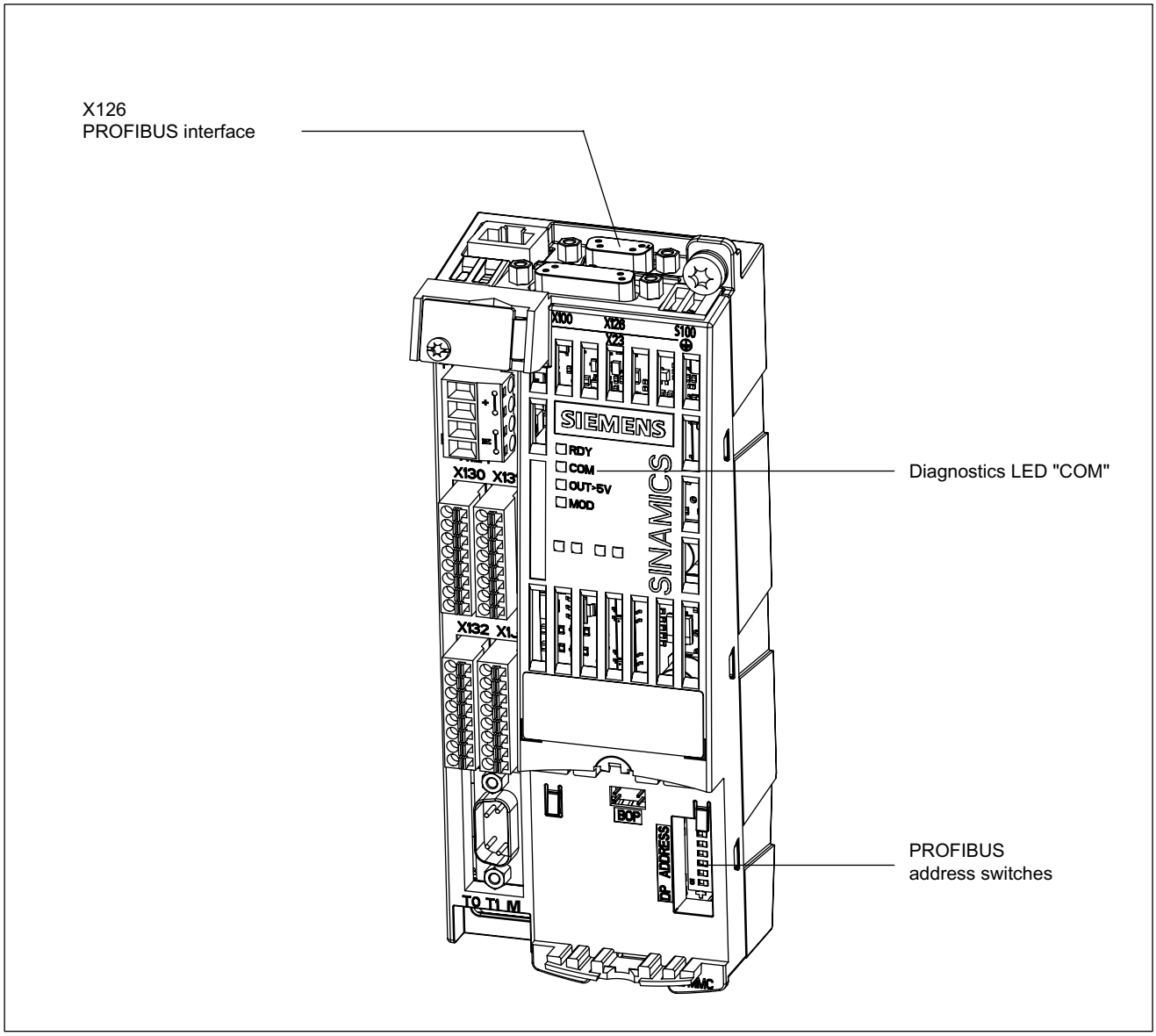

Figure 9-18 Interfaces and diagnostic LED

- PROFIBUS interface

  The PROFIBUS interface is described in the following documentation:

  References: SINAMICS S110 Equipment Manual
- PROFIBUS diagnostic LED

Note

A teleservice adapter can be connected to the PROFIBUS interface (X126) for remote diagnostics purposes.

Setting the PROFIBUS address

Two methods are available for setting the PROFIBUS address:

1. Via the PROFIBUS address switches on the Control Unit
   - In this case, p0918 is read-only and simply displays the set address.
   - A change is not effective until POWER ON.
2. Via p0918
   - You can only use this method when all the PROFIBUS address switches from S1 to S7 are set to ON or OFF.
   - Address changes made via parameters must be saved in a non-volatile memory using the "Copy from RAM to ROM" function.
   - A change is not effective until POWER ON.

Example:

Setting the PROFIBUS address using the PROFIBUS address switches on the Control Unit.

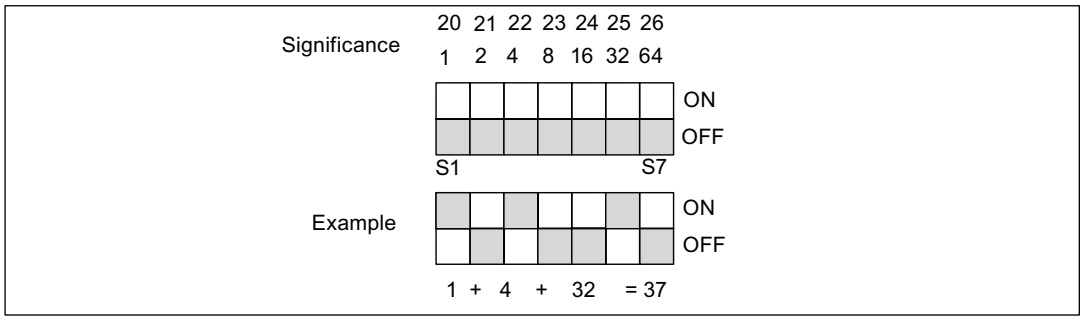

Figure 9-19 Example: PROFIBUS address via PROFIBUS address switch on Control Unit

Note

The factory settings are "ON" or "OFF" for all switches. With these two settings, the PROFIBUS address is set by parameterization.

Parameter p0918 is unique to the Control Unit (see Control Unit). The factory setting is 126.

Address 126 is used for commissioning. Permitted PROFIBUS addresses are 1 ... 126.

If more than one CU is connected to a PROFIBUS line, the address settings must differ from the factory settings. Note that each address can only be assigned once on a PROFIBUS line. This can be achieved using the address switch or by adjustable parameter p0918 accordingly. The setting can be made by connecting the 24 V supply step by step and resetting p0918, for example.

The address setting on the switch is displayed in r2057.

Each change made to the bus address is not effective until POWER ON.

Device master file

A device master file provides a full and clear description of the features of a PROFIBUS slave.

The GSD files can be found at the following locations:

- On the CD for the STARTER commissioning tool

  Order no. 6SL3072-0AA00-0AGx

Device identification

An identification parameter for individual slaves facilitates diagnostics and provides an overview of the nodes on the PROFIBUS.

The information for each slave is stored in the following CU-specific parameter:
r0964[0...6] device identification

Bus terminating resistor and shielding

Reliable data transmission via PROFIBUS depends, amongst other things, on the setting for the bus terminating resistors and the shielding for the PROFIBUS cables.

- Bus terminating resistor

  The bus terminating resistors in the PROFIBUS plugs must be set as follows:

  – First and last nodes in the line: switch on terminating resistor

  – Other nodes in the line: switch off terminating resistor

- Shielding for the PROFIBUS cables

  The cable shield in the plug must be connected at both ends with the greatest possible surface area.

  References: SINAMICS S110 Equipment Manual

9.2.2.2 Commissioning procedure

Preconditions and assumptions for commissioning

PROFIBUS slave

- The PROFIBUS address to be set for the application is known.
- The telegram type for each drive object is known by the application.

PROFIBUS master

- The communication properties of the SINAMICS S110 slave must be available in the master (GSD file or Drive ES slave OM).

Commissioning steps (example with SIMATIC S7)

1. Set the PROFIBUS address on the slave.
2. Set the telegram type on the slave.
3. Carry out the following in HWConfig:
   - Connect the drive to PROFIBUS and assign an address.
   - Set the telegram type.

     The same telegram type as on the slave should be set for every drive object exchanging process data via PROFIBUS.

     The master can send more process data than the slave uses. A telegram with a larger PZD number than is assigned for the drive object STARTER can be configured on the master. The PZDs not supplied by the drive object are filled with zeros.

     The setting "without PZD" can also be defined on a node or object.
4. The I/O addresses must be assigned in accordance with the user program.

9.2.2.3 Diagnostics options

The standard slave diagnostics can be read online in the HW config.

9.2.2.4 SIMATIC HMI addressing

You can use a SIMATIC HMI as a PROFIBUS master (master class 2) to access SINAMICS directly. With respect to SIMATIC HMI, SINAMICS behaves like a SIMATIC S7. For accessing drive parameters, the following simple rule applies:

- Parameter number = data block number
- Parameter sub-index = bit 0 - 9 of data block offset
- Drive object number = bit 10 - 15 of data block offset

Pro Tool and WinCC flexible

The SIMATIC HMI can be configured flexibly with "Pro Tool" or "WinCC flexible".

The following specific settings for drives must be observed when configuration is carried out with Pro Tool or WinCC flexible.

Controllers: Protocol always "SIMATIC S7 – 300/400"

Table 9- 34 Other parameters

Field	Value
Network parameter profile	DP
Network parameter baud rate	Any
Communication partner address	PROFIBUS address of the drive unit
Communication partner slot/subrack	don’t care, 0

Table 9- 35 Tags: "General" tab

Field	Value
Name	Any
Control	Any
Type	Depending on the addressed parameter value, e.g.: INT: for integer 16 DINT: for integer 32 WORD: for unsigned 16 REAL: for float
Area	DB
DB (data block number)	Parameter number 1 ... 65535
DBB, DBW, DBD (data block offset)	Drive object no. and subindex Bit 15 – 10: Drive object no. 0 ... 63 Bit 9 – 0: Sub-index 0 ... 1023 In other words: DBW = 1024 * drive object no. + sub-index
Length	Not activated
Acquisition cycle	Any
No. of elements	1
Decimal places	Any

Note

- You can operate a SIMATIC HMI together with a drive unit independently of an existing control.
  A basic "point-to-point" connection can only be established between two nodes (devices).
- The "variable" HMI functions can be used for drive units. Other functions cannot be used (e.g. "messages" or "recipes").
- Individual parameter values can be accessed. Entire arrays, descriptions, or texts cannot be accessed.

9.2.2.5 Monitoring: telegram failure

Description

After a telegram failure and the additional monitoring time has elapsed (p2047), bit r2043.0 is set to "1" and alarm A01920 is output. Binector output r2043.0 can be used for an emergency stop, for example.

After a delay time has elapsed (p2044), fault F01910 is output. Fault F01910 triggers fault response OFF3 (quick stop) for SERVO. If no OFF response is to be triggered, the fault response can be reparameterized accordingly.

Fault F01910 can be acknowledged immediately. The drive can then be operated even without PROFIdrive.

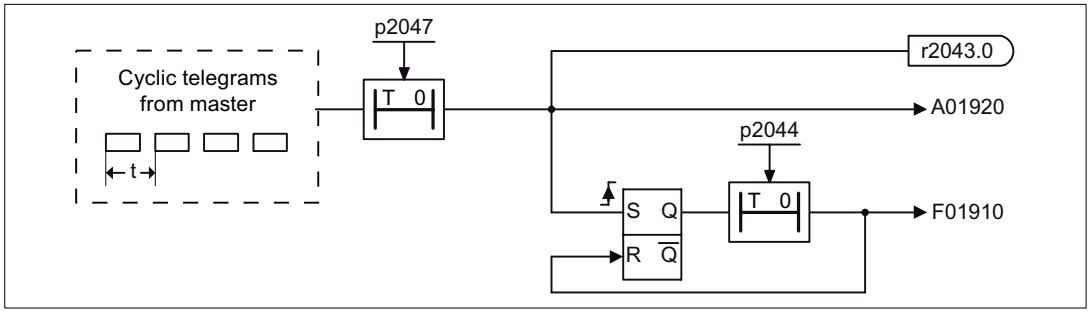

Figure 9-20 Monitoring: telegram failure

Note

The additional monitoring time parameter p2047 is only useful for cyclic communication. During isochronous communication, a telegram failure should be recorded without delay, in order to respond as quickly as possible.

9.2.3 Motion Control with PROFIBUS

Motion Control /Isochronous drive link with PROFIBUS

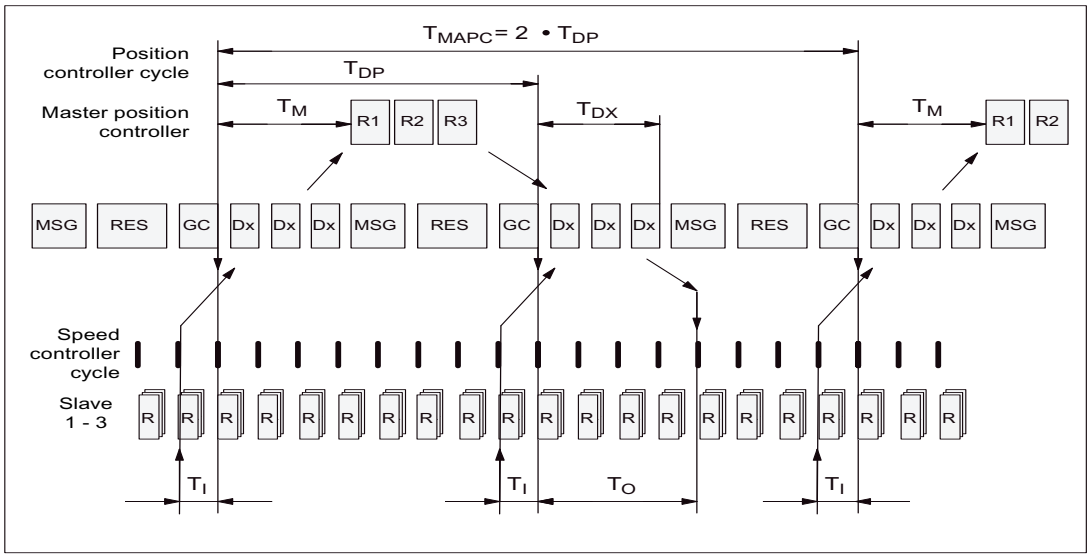

Figure 9-21 Motion Control/Isochronous drive link with PROFIBUS, optimized cycle with T_{MAPC} = 2 • T_{DP}

Sequence of data transfer to closed-loop control system

1. Position actual value G1_XIST1 is read into the telegram image at time T_I before the start of each cycle and transferred to the master in the next cycle.
2. Closed-loop control on the master starts at time T_M after each position controller cycle and uses the current actual values read previously from the slaves.
3. In the next cycle, the master transmits the calculated setpoints to the telegram image of the slaves. The speed setpoint command NSOLL_B is issued to the closed-loop control system at time T_O after the beginning of the cycle.

Designations and descriptions for Motion Control

Table 9- 36 Time settings and meanings

Name	Value[1)]	Limit value	Description
T_{BASE_DP}	BB8 hex ≐ 3000 dec	-	Time basis for T_{DP} calculation: T_{BASE_DP} = 3000 • T_{Bit} = 250 µs T_{Bit} = 1/12 µs at 12 Mbaud T_{BASE_DP} corresponds to the largest current controller cycle (at least 250 µs) of a drive object (servo).
T_{DP}	4	$T_{DP} \geq T_{DP_MIN}$	DP cycle time T_{DP} = integer multiple • T_{BASE_DP} calculation: T_{DP} = 4 • T_{BASE_DP} = 1 ms
		T_{DP_MIN} = 4	Min. DP cycle time calculation: T_{DP_MIN} = 4 • T_{BASE_DP} = 1 ms
		T_{DP_MAX} = 128	Maximum DP cycle time calculation: T_{DP_MAX} = 128 • T_{BASE_DP} = 32 ms
T_{MAPC}	1	n • T_{DP} n = 1 - 14	Master application cycle time This is the time frame in which the master application generates new setpoints (e.g. in the position controller cycle). Calculation: T_{MAPC} = 1 • T_{DP} = 1 ms
T_{SAPC}			Slave application cycle time
T_{BASE_IO}	BB8 hex ≐ 3000 dec	-	Time basis for T_I, T_O calculation: T_{BASE_IO} = 3000 • T_{Bit} = 250 µs T_{Bit} = 1/12 µs at 12 Mbaud T_{BASE_IO} corresponds to the largest current controller cycle (at least 250 µs) of a drive object (servo) in the drive unit.
T_I	2	$T_{I_MIN} \leq T_I < T_{DP}$	Time of actual-value sensing This is the time at which the actual position value is captured before the start of each cycle. T_I = integer multiple of T_{BASE_IO} calculation: T_I = 2 • T_{BASE_IO} = 500 µs When T_I = 0: T_I = T_{DP}
		T_{I_MIN} = 1	Min. T_I calculation: T_{I_MIN} = 1 • T_{BASE_IO} = 250 µs T_{I_MIN} corresponds to the largest current controller cycle (at least 250 µs) of a drive object (servo) in the drive unit.
T_O	4	T_{DX} + T_{O_MIN} ≤ T_O ≤ T_{DP}	Time of setpoint transfer This is the time at which the transferred setpoints (speed setpoint) are accepted by the closed-loop control system after the start of the cycle. T_O = integer multiple of T_{BASE_IO} Calculation: T_O = 4 • T_{BASE_IO} = 1000 µs When T_O = 0: T_O ≐ T_{DP}
		T_{O_MIN} = 1	Minimum time distance between T_O and T_{DX} T_{O_MIN} = 1 • T_{BASE_IO} = 250 µs

Name	Value[1)]	Limit value	Description
T_{DX}	E10 hex ≐ 3600 dec	$T_{DX} < T_{DP}$	Data exchange time This is the time required within one cycle for transferring process data to all available slaves. T_{DX} = integer multiple of T_{Bit} T_{Bit} = 1/12 µs at 12 MBaud calculation: $T_{DX} = 3600 \cdot T_{BIT} = 300$ µs
T_{PLL_W}	0	-	PLL window (half the width of the GC synchronization window) The following applies to the setting: • Small window --> minimization of synchronization fluctuations on the drive • Large window --> higher tolerance of GC fluctuations Calculation (assumption: T_{PLL_W} = A hex ≐ 10 dez) $T_{PLL_W} = 10 \cdot TBIT = 0.833$ µs T_{Bit} = 1/12 µs at 12 Mbps
T_{PLL_D}	0	-	PLL dead time The PLL dead time can be used to compensate for different data transfer times to the slaves (e.g. due to repeaters). The slaves with faster transfer times are delayed by a corresponding PLL dead time. Calculation: $T_{PLL_D} = 0 \cdot T_{BIT} = 0$ µs T_{Bit} = 1/12 µs at 12 MBaud
GC			Global Control Telegram (Broadcast Telegram)
T_{TH}			Token hold time This time is calculated by the engineering system.
MSG			Acyclic service After cyclic transmission, the master checks whether the token hold time has already expired. If not, another acyclic DPV1 service is transmitted.
RES			Reserve: "Active pause" until the isochronous cycle has expired
R			Processing time for speed or position controller
T_M			Master time This is the time from the start of the position controller cycle to the start of master closed-loop control.
GAP			Attempt to open connection with new node. This attempt takes place every xth cycle.
T_J			T_J returns the duration of the cycle jitter. The cycle jitter is the delay of the GC telegram.
1) The values correspond to device master file si0280e5.gs_ and an example configuration.			

Setting criteria for times

- Cycle (T_{DP})
  - T_{DP} must be set to the same value for all bus nodes.
  - $T_{DP} > T_{DX}$ and $T_{DP} > T_O$

    T_{DP} is thus large enough to enable communication with all bus nodes.

NOTICE
After T_{DP} has been changed on the PROFIBUS master, the drive system must be switched on (POWER ON) or the parameter p0972=1 (Reset drive unit) must be set.

- T_I and T_O
  - Setting the times in T_I and T_O to be as short as possible reduces the dead time in the position control loop.
  - $T_O > T_{DX} + T_{Omin}$
- A tool is available for setting and optimization purposes (e.g. HWConfig in SIMATIC S7). The following must be noted:
  - Configuring reserves allows the following:

    Class 2 masters can be connected

    Non-cyclic communication

Minimum times for reserves

Table 9- 37 Minimum times for reserves

Data	Time required [µs]
Basic load	300
Per slave	20
Per byte of user data	1,5
One additional class 2 master	500

User data integrity

User data integrity is verified in both transfer directions (master <—> slave) by a sign of life (4-bit counter).

The sign-of-life counters are incremented from 1 to 15 and then start again at 1.

- Master sign of life
  - STW2.12 ... STW2.15 are used for the master sign of life.
  - The master sign of life counter is incremented in each master application cycle (TMAPC).
  - The number of sign-of-life errors tolerated can be set via p0925.
  - p0925 = 65535 deactivates sign of life monitoring on the slave.
  - Monitoring

    The master sign of life is monitored on the slave and any sign-of-life errors are evaluated accordingly.

    The maximum number of tolerated master sign-of-life errors with no history can be set via p0925.

    If the number of tolerated sign-of-life errors set in p0925 is exceeded, the response is as follows:

    – A corresponding message is output.

    – The value zero is output as the slave sign of life.

    – Synchronization with the master sign of life is started.
- Slave sign of life
  - ZSW2.12 ... ZSW2.15 are used for the slave sign of life.
  - The slave sign of life counter is incremented in each DP cycle (T_{DP}).

Basic information about the drive system 10

10.1 Parameter

Parameter types

The following adjustable and display parameters are available:

- Adjustable parameters (write/read)

  These parameters have a direct impact on the behavior of a function.

  Example: Ramp-up and ramp-down time of a ramp-function generator

- Display parameters (read only)

  These parameters are used to display internal variables.

  Example: Current motor current

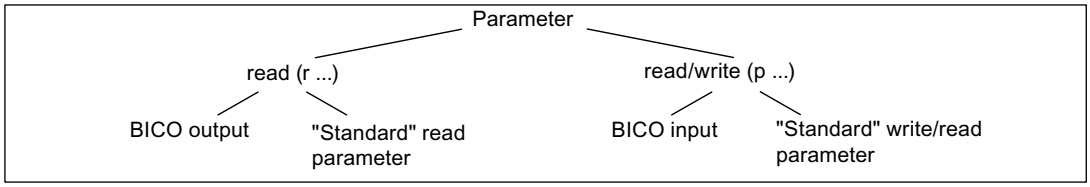

Figure 10-1 Parameter types

All these drive parameters can be read and changed via PROFIBUS using the mechanisms defined in the PROFIdrive profile.

Parameter categories

The parameters of the individual drive objects are categorized into data sets as follows:

- Data-set-independent parameters

  These parameters exist only once per drive object.

- Data-set-dependent parameters

  These parameters can exist a multiple number of times for each drive object and can be addressed via the parameter index for reading and writing. A distinction is made between various types of data set:

  – CDS: Command Data Set

    By parameterizing several command data sets and switching between them, the drive can be operated with different pre-configured signal sources.

  – DDS: Drive Data Set

    The drive data set contains the parameters for switching between different drive control configurations.

The CDS and DDS can be switched over during normal operation. Further types of data set also exist, however these can only be activated indirectly by means of a DDS changeover.

- EDS Encoder Data Set
- MDS Motor Data Set

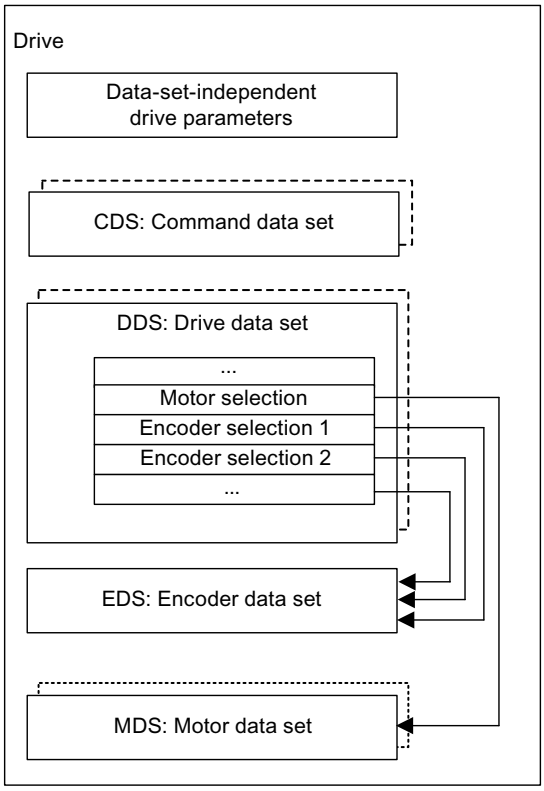

Figure 10-2 Parameter categories

Saving parameters in a non-volatile memory

The modified parameter values are stored in the volatile RAM. When the drive system is switched off, this data is lost.

So that the changes can be restored, the data must be saved as follows in a non-volatile manner in the Control Unit.

- Save parameters - device and drive

  p0977 = 1; automatically reset to 0

- Save the parameters with STARTER

  See "Copy RAM to ROM" function

NOTICE
The power supply to the Control Unit may first be switched off after saving has finished (i.e. after saving has started, wait until it has finished and parameter p0977 has the value 0 once more).

Resetting parameters

The parameters can be reset to the factory setting as follows:

- Reset parameters - current drive object

  p0970 = 1; automatically reset to 0
- Reset parameters - all parameters drive object "Control Unit"

  p0009 = 30 parameter reset

  p0976 = 1; automatically reset to 0

Access level

The parameters are subdivided into access levels. The SINAMICS S110 List Manual specifies the access level at which the parameter can be displayed and modified. The required access levels 0 to 4 can be set in p0003.

Table 10- 1 Access levels

Access level	Remark
0 User-defined	Parameter from the user-defined list
1 Standard	Parameters for the simplest operator functions (e.g. p1120 = ramp-function generator ramp-up time).
2 Extended	Parameters to handle the basic functions of the device.
3 Expert	Expert knowledge is already required for this parameter (e.g. knowledge about BICO parameterization).
4 Service	Please contact your local Siemens office for the password for parameters with access level 4 (Service). It must be entered into p3950.

Note

Parameter p0003 is only available on the drive object Control Unit.

10.2 Data sets

10.2.1 CDS: Command Data Set

CDS: Command Data Set

The BICO parameters (binector and connector inputs) are grouped together in a command data set. These parameters are used to interconnect the signal sources of a drive.

By parameterizing several command data sets and switching between them, the drive can be operated with different pre-configured signal sources.

A command data set contains the following (examples):

- Binector inputs for control commands (digital signals)
  - ON/OFF, enable signals (p0844, etc.)
  - Jog (p1055, etc.)
- Connector inputs for setpoints (analog signals)
  - CI: Speed controller speed setpoint 1 (p1155)
  - Torque limits and scaling factors (p1522, p1523, p1528, p1529)

SINAMICS S110 can manage 2 command data sets.

The following parameters are available for selecting command data sets and for displaying the currently selected command data set:

The binector input p0810 is used to select a command data set.

- p0810 BI: Command data set selection CDS bit 0

If a command data set that does not exist is selected, the current data set remains active. The selected data set is displayed using parameter (r0836).

Example: Changeover between command data set 0 and 1

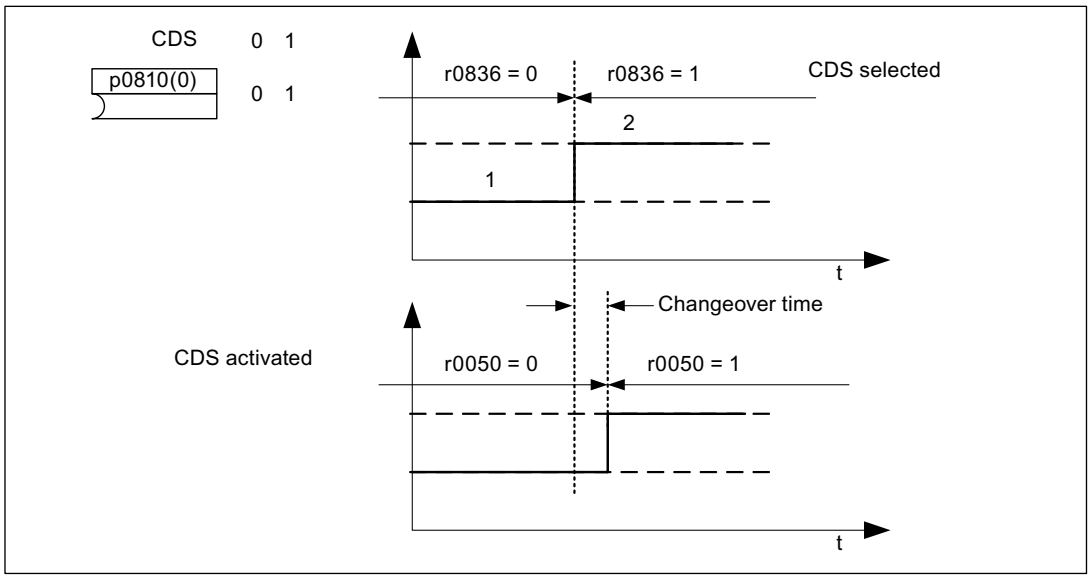

Figure 10-3 Switching the command data set (example)

10.2.2 DDS: Drive Data Set

DDS: Drive Data Set

A drive data set contains various adjustable parameters that are relevant with respect to open and closed-loop drive control:

- Numbers of the assigned motor and encoder data sets:
  - p0186: Assigned motor data set (MDS)
  - p0187: Assigned encoder data set (EDS)
  - p0188: Assigned encoder data set (EDS; for the external encoder)
- Various control parameters, e.g.:
  - Fixed speed setpoints (p1001 to p1004)
  - Speed limits min./max. (p1080, p1082)
  - Characteristic data of ramp-function generator (p1120 ff)
  - Characteristic data of controller (p1240 ff)
  - ...

The parameters that are grouped in the drive data set are identified in the SINAMICS S110 List Manual by "Data Set DDS" and are assigned an index [0...n].

SINAMICS S110 can manage up to 2 drive data sets. The number of drive data sets is configured with p0180. The parameters of the drive data sets are switched with an index. This simplifies the selection between the drive configurations (control type, motor, encoder).

The binector input p0820 is used to select a drive data set.

- p0820 BI: Drive data set selection DDS, bit 0

If the DDS is switched over, the EDS and MDS are automatically switched over with it.

10.2.3 EDS: Encoder Data Set

EDS: Encoder Data Set

An encoder data set contains various adjustable parameters describing the connected encoder for the purpose of configuring the drive.

- Adjustable parameters, e.g.:
  - Encoder interface component number (p0141)
  - Encoder component number (p0142)
  - Encoder type selection (p0400)

The parameters that are grouped together in the encoder data set are identified in the parameter list by "Data Set EDS" and are assigned an index [0...n].

A separate encoder data set is required for each encoder controlled by the Control Unit. An encoder data set is assigned to a drive data set via parameter p0187 (encoder 1: motor encoder) or p0188 (encoder 2: external encoder). Only one of the two encoders can be used at a time.

An encoder data set can only be changed over using a DDS changeover.

An encoder data set changeover without pulse inhibit (motor running under current) may only be performed on adjusted encoders (pole position ID performed or commutation angle determined for absolute encoders).

The DDS must be changed over in order to switch over the EDS. The MDS will also be switched over with it.

10.2.4 MDS: Motor Data Set

MDS: Motor Data Set

A motor data set contains various adjustable parameters describing a connected motor for the purpose of configuring the drive. It also contains certain display parameters with calculated data.

- Adjustable parameters, e.g.:
  - Motor component number (p0131)
  - Motor type selection (p0300)
  - Rated motor data (p0304 ff)
  - ...
- Display parameters, e.g.:
  - Calculated rated data (p0330 ff)
  - ...

The parameters that are grouped in the motor data set are identified in the SINAMICS S110 List Manual by "Data Set MDS" and are assigned an index [0...n].

The motor data set is assigned to a drive data set via parameter p0186.

A motor data set can only be changed using a DDS changeover. The motor data set changeover is, for example, used for:

- Switching over different motors
- Switching over different windings in a motor (e.g. star-delta changeover)
- Adapting the motor data

SINAMICS S110 can manage up to 2 motor data sets. The number of motor data sets in p0130 must not exceed the number of drive data sets in p0180.

10.2.5 Integration

Function diagrams (see SINAMICS S110 List Manual)

- 8560 Command Data Sets (CDS)
- 8565 Drive Data Sets (DDS)
- 8575 Motor Data Sets (MDS)
- 8580 Power unit Data Set, PDS

Overview of important parameters (see SINAMICS S110 List Manual)

Adjustable parameters

- p0130 Motor data sets (MDS) number
- p0139 Copy motor data set (MDS)
- p0140 Encoder data sets (EDS) number
- p0180 Drive data sets (DDS) number
- p0186 Motor data set (MDS) number
- p0187 Encoder 1 encoder data set number
- p0188 Encoder 2 encoder data set number
- p0809 Copy command data set (CDS)
- p0810 BI: Command data set selection CDS bit 0
- p0819[0...2] Copy drive data set DDS
- p0820 BI: Drive data set selection DDS, bit 0

10.2.6 Using data sets

Copying a command data set

Set parameter p0809 as follows:

1. p0809[0] = number of the command data set to be copied (source)
2. p0809[1] = number of the command data to which the data is to be copied (target)
3. p0809[2] = 1

Start copying.

Copying is finished when p0809[2] = 0.

Note

In STARTER, you can copy the command data sets (Drive -> Configuration -> "Command data sets" tab page).

You can select the displayed command data set in the relevant STARTER screens.

Copying a drive data set

Set parameter p0819 as follows:

1. p0819[0] = Number of the drive data set to be copied (source)
2. p0819[1] = Number of the drive data set to which the data is to be copied (target)
3. p0819[2] = 1

Start copying.

Copying is finished when p0819[2] = 0.

Note

In STARTER, you can copy the drive data sets (Drive -> Configuration -> "Drive data sets" tab page).

You can select the displayed drive data set in the relevant STARTER screens.

Copying the motor data set

Set parameter p0139 as follows:

1. p0139[0] = Number of the motor data set that is to be copied (source)
2. p0139[1] = Number of the motor data set which should be copied into (target)
3. p0139[2] = 1

Start copying.

Copying has been completed, if p0139[2] = 0.

Note

In STARTER, you can set the drive data sets via the drive configuration.

Uncommissioned data sets

Drive commissioning can also be completed if uncommissioned data sets (EDS, MDS, DDS) are available.

Uncommissioned data sets are marked as "uncommissioned".

The attributes are displayed in STARTER or in the expert list or OPs.

Activation of these data sets is not permitted and will be rejected with an error.
Assigning these data sets to a drive data set (DDS) is only possible with a commissioning step (p0009 ≠ 0, p0010 ≠0).

Note

If there is no DDS dataset with the attribute "commissioned", the assigned drive axis remains in the controller inhibit.

10.3 Working with the memory card

10.3.1 Functions of the memory card

This section describes the basic functions of the memory card in the S110 system.

Basics:

The CU305, the S110 system Control Unit, manages three memory areas:

1. A volatile memory, the RAM, also called working memory.
2. A non-volatile memory, the ROM, also called Flash memory.
3. An optionally available portable memory card. Only memory cards which have been prepared for these systems by Siemens will be accepted.

During operation, the S110 system works from the work memory. It is here that all project data and application programs for operation are stored.

To save the current data from the work memory, you must copy it to non-volatile memory **before** shutting down. More detailed information appears in "RAM to ROM" in the commissioning section of this manual.

An optional memory card is used to save a variety of parameter data sets and transfer them to other S110 systems in order to install firmware updates or carry out standard commissioning. A memory card is absolutely essential if you wish to use the extended functions supported by Safety Integrated.

Parameter data sets

Parameter data sets combine all the parameters for a project, including the project itself. Parameter data sets differ on the basis of drive configuration (power unit, motor, encoder, etc. used) and application (e.g. function modules, type of control).

Four parameter data sets with the indices 0, 10, 11, and 12 can be saved in the ROM.

Up to 101 parameter data sets (indices 0, ..., 100) can be saved on the memory card.

The parameter data set with the index 0 is active in the RAM.

Copying parameter data sets from non-volatile memory to the memory card

There are three ways of copying parameter data sets from non-volatile memory to the memory card:

1. The system is powered down:
   - Insert an empty memory card into the CU305.
   - Switch on the system.
   - The system is put into operation by the firmware in the "ROM".
   - Then the complete up-to-date parameter data set with the index 0 is copied from the "ROM" to the memory card automatically and **without a prompt appearing**.
2. The system is switched on:
   - Insert a memory card into the CU305.
   - Execute command "RAM to ROM" (p0977[1]). The up-to-date parameter data set is copied automatically, first to the "ROM" and then to the memory card (in the latter case as a data set with the index 0). If the memory card already contains a parameter data set with the index 0, this will be overwritten without a prompt appearing.
3. The system is switched on:

- The user starts data transmission from the ROM to the memory card with parameters p0802, p0803 and p0804:
  - p0804 = 1, p0802 = (0...100) as target (to the memory card) and p0803 = (0/10/11/12) as source (from the "ROM").

Note

RAM to ROM transfer will overwrite the content of an inserted memory card.

When a memory card is inserted, the RAM to ROM command (p0977[1]) will copy the parameter data set with the index 0 from the ROM to the memory card. Any previously saved parameter data set will be overwritten.

Copying parameter data sets from the memory card to non-volatile memory

There are two ways of copying parameter data sets from the memory card to non-volatile memory:

1. The system is switched off:
   - Insert a memory card containing a parameter data set with the index 0 into the CU305.
   - Switch on the system. The new parameter data set will be copied to the ROM automatically. The parameter data set with the index 0 which was previously available in the ROM will be overwritten.
   - The system will then boot with the new parameter data set.
2. The system is switched on. The user starts data transmission from the memory card to the ROM with parameters p0802, p0803 and p0804:
   - p0804 = 2.
   - p0802 = (0...100) as source (from the memory card) and p0803 = (0/10/11/12) as target (to the "ROM").

Note

The parameter data set in the "ROM" is overwritten during system start-up.

If a memory card with a parameter data set is inserted when the system is switched on, the parameter data set with the index 0 in the "ROM" will be overwritten by the new one with the index 0 on the memory card.

Important parameters:

p0977: Save all parameters (for more information, see the S110 List Manual).

p0802: Data transfer of parameters [0,10,11,12], memory card as source or target.

p0803: Data transfer of parameters [0...100], non-volatile device memory as source or target.

p0804: Start of parameter data transfer and specification of transfer direction:

- p0804 = 1 : Transfer from the memory card to non-volatile device memory,
- p0804 = 2: Transfer from non-volatile device memory to memory card.

10.4 BICO technology: Interconnecting signals

10.4.1 Description

Description

Every drive contains a large number of interconnectable input and output variables and internal control variables.

BICO technology (Binector Connector Technology) allows the drive to be adapted to a wide variety of conditions.

Digital and analog signals, which can be interconnected as required by means of BICO parameters, are identified by the prefix BI, BO, CI, or CO in their parameter name.

These parameters are identified accordingly in the parameter list or in the function diagrams.

Note

The STARTER parameterization and commissioning tool is recommended when using BICO technology.

10.4.2 Binectors, connectors

Binectors, BI: Binector Input, BO: Binector Output

A binector is a digital (binary) signal without a unit which can assume the value 0 or 1.

Binectors are subdivided into binector inputs (signal sink) and binector outputs (signal source).

Table 10- 2 Binectors

Abbreviation	Symbol	Name	Description
BI		Binector input (signal sink)	Can be interconnected to a binector output as source. The number of the binector output must be entered as a parameter value.
BO		Binector output (signal source)	Can be used as a source for a binector input.

Connectors, CI: Connector Input, CO: Connector Output

A connector is a digital signal, e.g. in 32-bit format. It can be used to emulate words (16 bits), double words (32 bits) or analog signals. Connectors are subdivided into connector inputs (signal sink) and connector outputs (signal source).

Table 10- 3 Connectors

Abbreviation	Symbol	Name	Description
CI		Connector input (signal sink)	Can be interconnected to a connector output as source. The number of the connector output must be entered as a parameter value.
CO		Connector output (signal source)	Can be used as a source for a connector input.

10.4.3 Interconnecting signals using BICO technology

To interconnect two signals, a BICO input parameter (signal sink) must be assigned to the required BICO output parameter (signal source). The following information is required for connecting a binector/connector input to a binector/connector output:

- Binectors: Parameter number, bit number, and drive object ID
- Connectors with no index: Parameter number and drive object ID
- Connectors with index: Parameter number, index, and drive object ID
- Data type (signal source for connector output parameter)

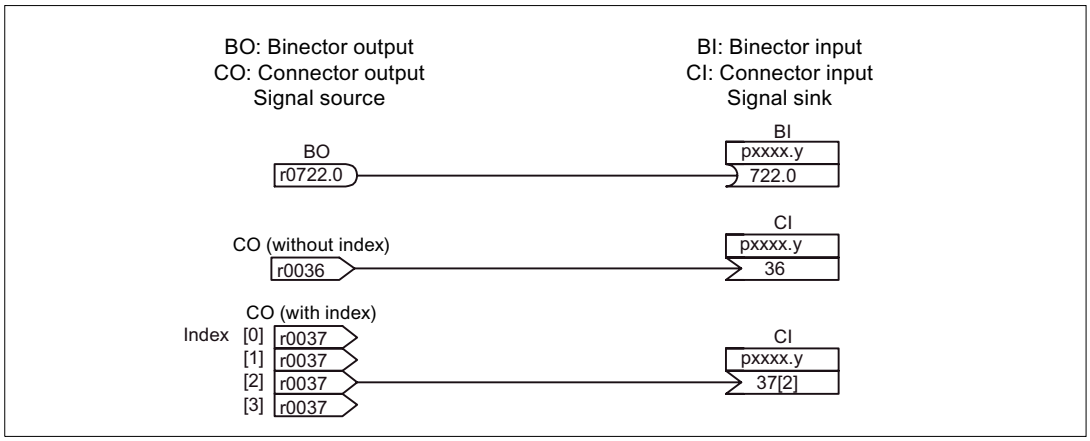

Figure 10-4 Interconnecting signals using BICO technology

Note

A connector input (CI) cannot be interconnected with any connector output (CO, signal source). The same applies to the binector input (BI) and binector output (BO).
For each CI and BI parameter, the parameter list shows under "data type" the information on the data type of the parameter and the data type of the BICO parameter.
For CO parameters and BO parameters, only the data type of the BICO parameter is shown.
Notation:
Data types BICO input: Data type parameter / Data type BICO parameter
Example: Unsigned32 / Integer16
Data types BICO output: Data type BICO parameter
Example: FloatingPoint32

The possible interconnections between the BICO input (signal sink) and the BICO output (signal source) are listed in the following documents:
References: SINAMICS S110 List Manual
Section "Explanation of list of parameters", table "Possible combinations for BICO interconnections".

The BICO parameter interconnection can be implemented in different command data sets (CDS). The different interconnections are activated by switching data sets. Interconnections across drive objects are also possible.

10.4.4 Internal encoding of the binector/connector output parameters

The internal codes are required for writing BICO input parameters via PROFIBUS, for example.

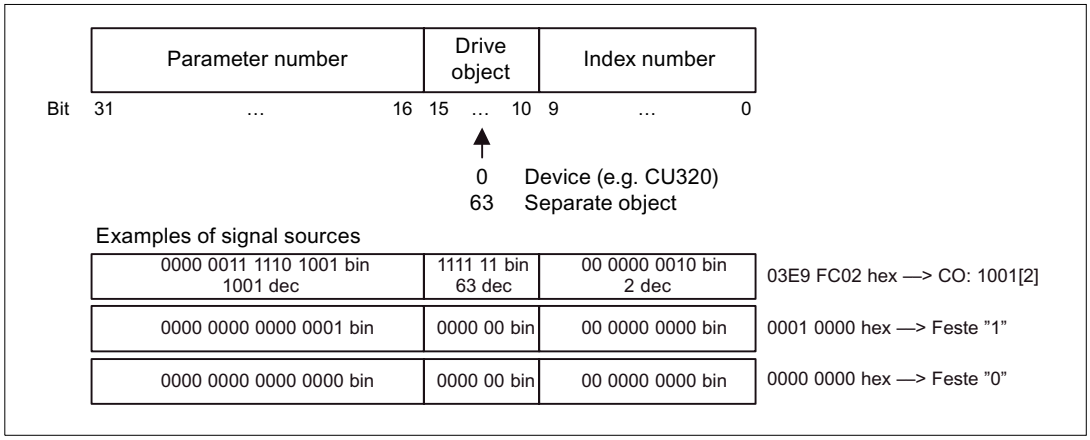

Figure 10-5 Internal encoding of the binector/connector output parameters

10.4.5 Sample interconnections

Example: Interconnection of digital signals

Suppose you want to operate a drive via terminals DI 0 and DI 1 on the Control Unit using jog 1 and jog 2.

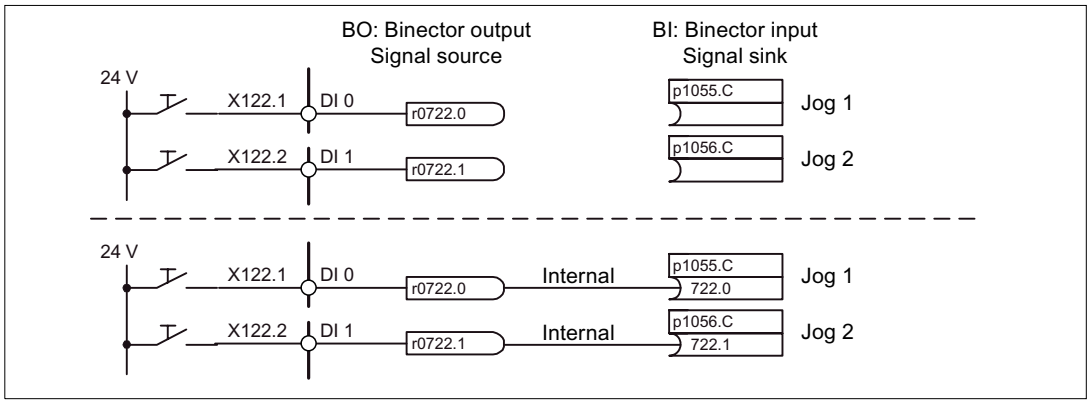

Figure 10-6 Interconnection of digital signals (example)

10.4.6 BICO technology:

Copying drives

When a drive is copied, the interconnection is copied with it.

Binector-connector converters and connector-binector converters

Binector-connector converter

- Several digital signals are converted to a 32-bit integer double word or to a 16-bit integer word.
- p2080[0...15] BI: PROFIdrive PZD send bit-serial

Connector-binector converter

- A 32-bit integer double word or a 16-bit integer word is converted to individual digital signals.
- p2099[0...1] CI: PROFIdrive PZD selection receive bit-serial

Fixed values for interconnection using BICO technology

The following connector outputs are available for interconnecting any fixed value settings:

- p2900[0...n] CO: Fixed value_%_1
- p2901[0...n] CO: Fixed value_%_2
- p2930[0...n] CO: Fixed value_M_1

Example:

These parameters can be used to interconnect the scaling factor for the main setpoint or to interconnect an additional torque.

10.4.7 Scaling

Signals for the analog outputs

Table 10- 4 List of signals for analog outputs

Signal	Parameter	Unit	Normalization (100 % = ...)
Speed setpoint before the setpoint filter	r0060	RPM	p2000
Speed actual value motor encoder	r0061	RPM	p2000
Speed actual value	r0063	RPM	p2000
Drive output frequency	r0066	Hz	Reference frequency
Absolute current actual value	r0068	Aeff	p2002
Actual DC link voltage value	r0070	V	p2001
Total torque setpoint	r0079	Nm	p2003
Actual active power	r0082	kW	r2004
Control deviation	r0064	RPM	p2000
Modulation depth	r0074	%	Reference modulation depth
Current setpoint, torque-generating	r0077	A	p2002
Current actual value, torque-generating	r0078	A	p2002
Flux setpoint	r0083	%	Reference flux
Flux actual value	r0084	%	Reference flux
Speed controller PI torque output	r1480	Nm	p2003
Speed controller I torque output	r1482	Nm	p2003

Changing scaling parameters p2000 to p2007

CAUTION
If a referenced form is selected and the reference parameters (e.g. p2000) are changed retrospectively, the referenced values of some of the control parameters are also adjusted to ensure that the control behavior is unaffected.

10.5 Inputs/outputs

10.5.1 Overview of inputs/outputs

The following digital/analog inputs/outputs are available:

Table 10- 5 Overview of inputs/outputs

Component	Digital			Analog	
	Inputs	Bidirectional inputs/outputs	Outputs	Inputs	Outputs
CU305	11[1)]	4[2)]	1	1	–
1) Variable: floating or non-floating 2) 4 of these are "high-speed inputs"					

Note

For detailed information about the hardware properties of I/Os, please refer to:
Reference: SINAMICS S110 Equipment Manual Control Units

For detailed information about the structural relationships between all I/Os of a component and their parameters, please refer to the function diagrams in:
Reference: SINAMICS S110 List Manual

10.5.2 Digital inputs/outputs

Digital inputs

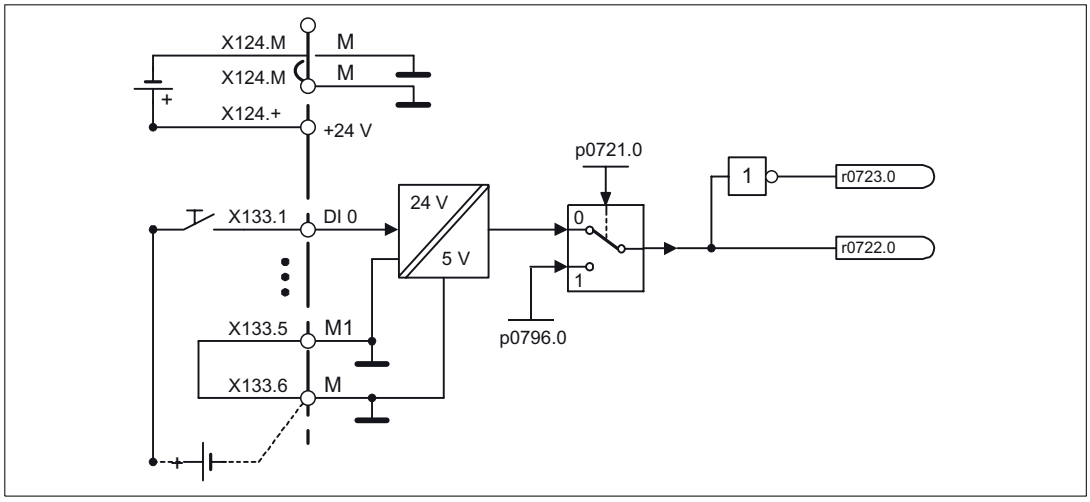

Figure 10-7 Digital inputs: Signal processing using DI 0 of CU305 as an example

Properties

- The digital inputs are "high active".
- An open input is interpreted as "low".
- Fixed debouncing setting

  Delay time = 1 to 2 current controller cycles (250 µs)
- Availability of the input signal for further interconnection
  - inverted and not inverted as a binector output
  - as a connector output
- Simulation mode settable and parameterizable.
- Isolation block by block, set by jumper.
  - Jumper open: electrically isolated.
    The digital inputs function only if a reference ground is connected.
  - Jumper closed, non-floating.
    The reference potential of the digital inputs is the ground of the Control Unit.

Function diagrams (see SINAMICS S110 List Manual)

- 2020 Digital inputs, electrically isolated (DI 0 ... DI 3)
- 2021 Digital inputs, electrically isolated (DI 16 ... DI 19)
- 2022 Digital inputs, electrically isolated (DI 20 ... DI 22)
- 2030 Digital inputs/outputs, bidirectional (DI/DO 8 ... DI/DO 9)
- 2031 Digital inputs/outputs, bidirectional (DI/DO 10 ... DI/DO 11)

Digital output

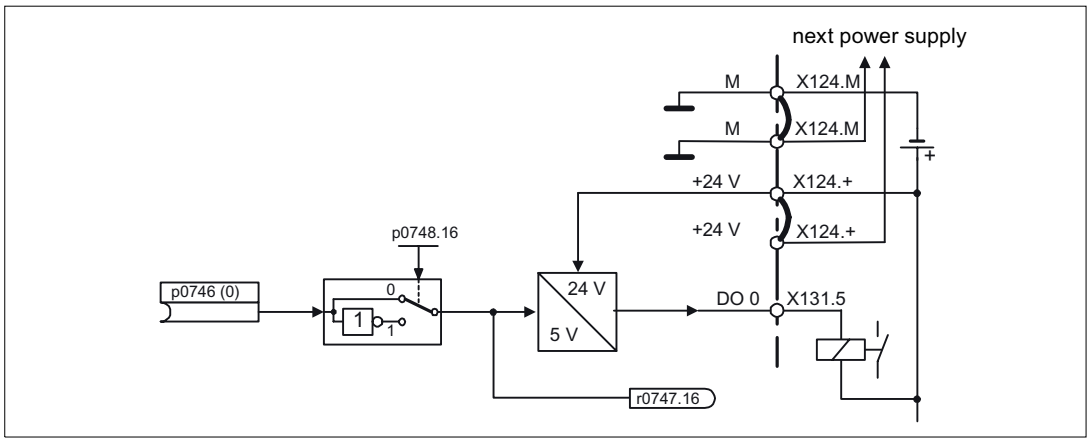

Figure 10-8 Digital output: Signal processing of DO 0

Properties

- Separate power supply for the digital outputs.
- Source of output signal can be selected by parameter.
- Signal can be inverted by parameter.
- Status of output signal can be displayed
  - as a binector output
  - as a connector output

Note

Before the digital output can function, its own electronics power supply must be connected.

Function diagrams (see SINAMICS S110 List Manual)

- 2032 digital output (DO 16)

Bidirectional digital inputs/outputs

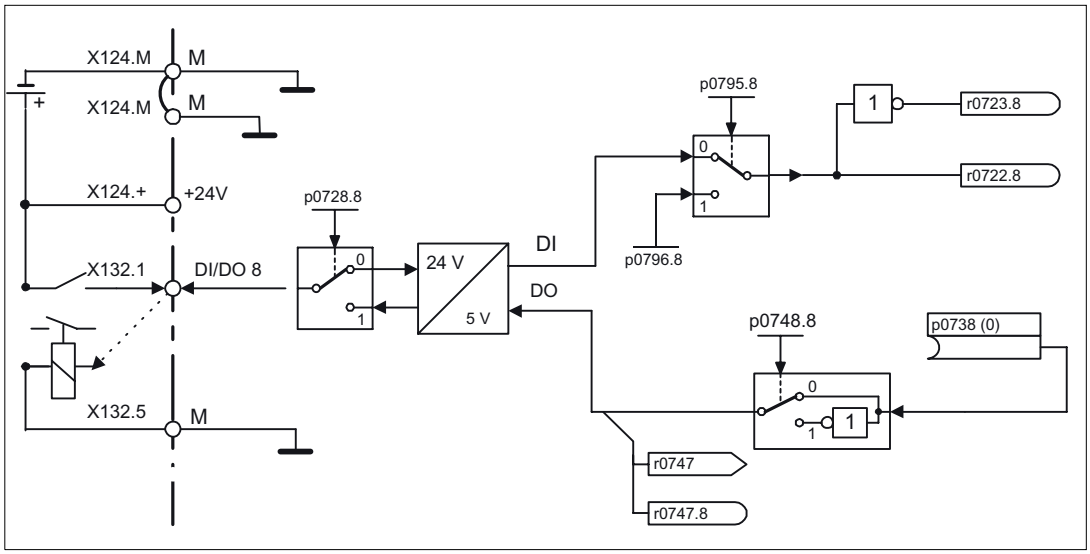

Figure 10-9 Bidirectional inputs/outputs: Signal processing using DI/DO 8 of CU305 as an example

Properties

- Can be parameterized as digital input or output.
- When set as digital input:
  - Four "high-speed inputs" on Control Unit

    If these inputs are used, for example, for the "flying measurement" function, they act as "high-speed inputs" with virtually no time delay when the actual value is saved.
  - The properties of the "pure" digital outputs apply.
- When set as digital output:
  - The properties of the "pure" digital output apply.
- Sharing of bidirectional input/output resources by the CU and higher-level control (see section "Use of bidirectional inputs/outputs on the CU")

Function diagrams (see SINAMICS S110 List Manual)

- 2030 Bidirectional digital inputs/outputs (DI/DO 8 ... DI/DO 9)
- 2031 Bidirectional digital inputs/outputs (DI/DO 10 ... DI/DO 11)

10.5.3 Analog Input

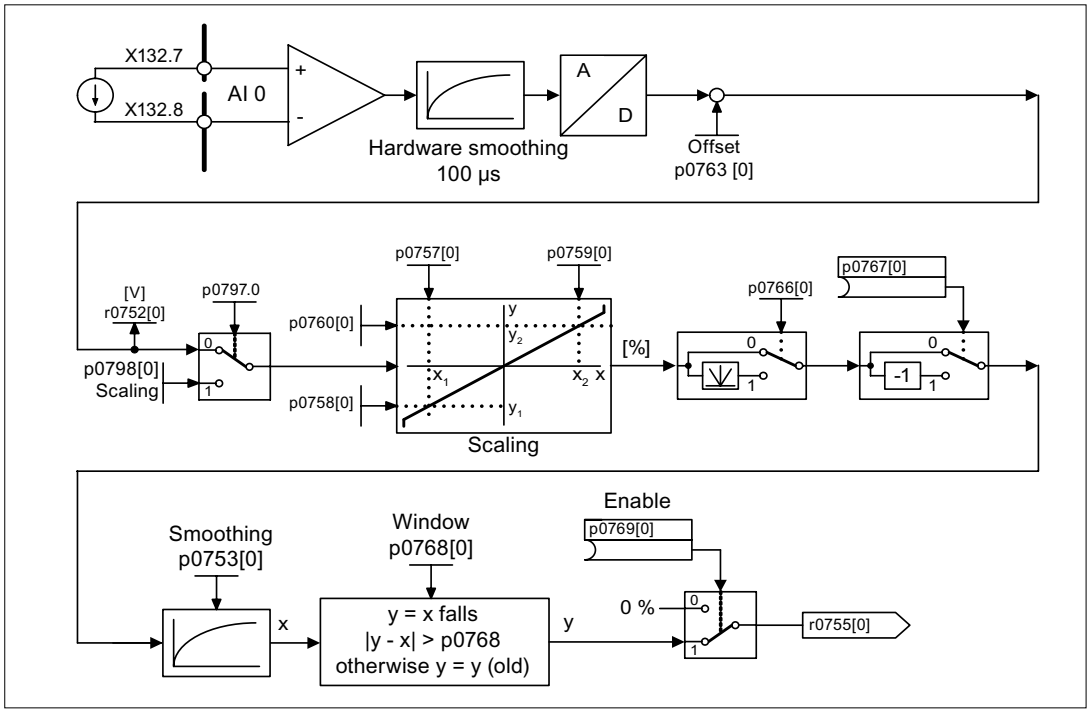

Figure 10-10 Analog inputs: Signal processing for the AI0

Properties

- Hardware input filter set permanently
- Simulation mode parameterizable
- Adjustable offset
- Signal can be inverted via binector input
- Adjustable absolute-value generation
- Noise suppression (p0768)
- Enabling of inputs via binector input
- Output signal available via connector output
- Scaling
- Smoothing

NOTICE
Scaling parameters p0757 to p0760 do not limit the voltage/current values.

Function diagram (see SINAMICS S110 List Manual)

- 2040 Analog input (AI 0)

10.6 System sampling times

The software functions installed in the system are executed cyclically at different sampling times.

The sampling times of the functions are pre-assigned automatically when the drive unit is configured.

- Current controller 250 µs
- Speed controller 250 µs
- Flux controller 250 µs
- Setpoint channel 4,000 µs
- Position controller 1,000 µs
- Positioning 4,000 µs
- Technology controller 4,000 µs

For p0092 = 1, the sampling times are pre-assigned so that isochronous operation together with a control is possible. If isochronous operation is not possible due to incorrect sampling time settings, then an appropriate message is output (A01223, A01224). Before the automatic configuration, parameter p0092 must be set to "1" in order that the sampling times are appropriately pre-set.

- p0009 Device commissioning, parameter filter
- p0092 Isochronous PROFIBUS operation, pre-assignment/check
- p0097 Selects the drive object type
- p1800 Pulse frequency
- r9780 SI monitoring clock cycle (Control Unit)
- r9880 SI monitoring clock cycle (Motor Module)

10.7 Licensing

Description

SINAMICS S110 requires that a license purchased specifically for this purpose is assigned to the hardware if the extended functions of Safety Integrated are to be used. In doing this you will receive a license key, which links the extended functions of Safety Integrated with the hardware electronically. In order to assign the license to the hardware, you must have a memory card (this also has to be purchased separately).

The license key is an electronic license stamp declaring that one or more software licenses have been purchased.

Actual customer verification of the license for the software that is subject to license is called a certificate of license.

Note

Refer to the order documentation (e.g. catalogs) for information on basic functions and functions subject to license.

An insufficient license is indicated via the following alarm and LED on the Control Unit:

- A13000 License not sufficient
- READY LED Flashes green/red at 0.5 Hz

NOTICE
The drive can only be operated with an insufficient license during commissioning and servicing. The drive requires a sufficient license in order for it to operate normally.

Properties of the license key

- Is assigned to a specific memory card.
- Saved in non-volatile memory.
- Is not transferrable.
- Can be acquired using the "WEB License Manager" from a license database.

Generating a license key via the "WEB License Manager"

The following information is required:

- Serial number for the memory card
- License number, delivery note number, and the license (on the Certificate of License)

1. Call up the "WEB License Manager".

   http://www.siemens.com/automation/license
2. Choose "Direct access".
3. Enter the license number and delivery note number of the license.

   --> Click "Next".
4. Enter serial number.
5. Select a product, e. g. "SINAMICS S CU3xx".

   --> Click "Next".
6. Choose "Available license numbers".

   --> Click "Next".
7. Check the assignment.

   --> Click "Assign".
8. When you are sure that the license has been correctly assigned, click "OK".
9. The license key is displayed and can be entered.

Entering the license key

With the STARTER commissioning software, the ASCII characters are not entered in code, but the letters and numbers in the license key can be input directly as they appear on the license certificate.
In this case, the ASCII coding is processed by STARTER in the background.

Example of a license key:

E1MQ-4BEA = 69 49 77 81 45 52 66 69 65 dec (ASCII characters)

Procedure for entering a license key (see example):

p9920[0] = E 1st character

...

p9920[8] = A 9th character

Note

When changing p9920[x] to the value 0, all of the following indices are also set to 0.

After the license key has been entered, it has to be activated as follows:

- p9921 = 1 Licensing, activate license key

  The parameter is automatically reset to 0

Entering the license key with BOP20

If you use the BOP20 to enter the license key, you will need to use the ASCII code for the key (see above for an example). In the table below, you can enter the characters in the license key and the corresponding decimal numbers.

Table 10- 6 License key table

Letter/number												
decimal												

ASCII code

Table 10- 7 Excerpt of ASCII code

Letter/number	decimal	Letter/number	decimal
-	45	I	73
0	48	J	74
1	49	K	75
2	50	L	76
3	51	M	77
4	52	N	78
5	53	O	79
6	54	P	80
7	55	Q	81
8	56	R	82
9	57	S	83
A	65	T	84
B	66	U	85
C	67	V	86
D	68	W	87
E	69	X	88
F	70	Y	89
G	71	Z	90
H	72	Blanks	32

Overview of important parameters (see SINAMICS S110 List Manual)

- p9920 Licensing, enter license key
- p9921 Licensing, activate license key

Appendix 11

11.1 List of abbreviations

Note:

The following list of abbreviations contains the abbreviations and their meanings used in the entire SINAMICS user documentation.

Abbreviation	Derivation of abbreviation	Meaning
A		
A...	Alarm	Alarm
AC	Alternating Current	Alternating current
ADC	Analog Digital Converter	Analog digital converter
AI	Analog Input	Analog input
AIM	Active Interface Module	Active Interface Module
ALM	Active Line Module	Active Line Module
AO	Analog Output	Analog output
AOP	Advanced Operator Panel	Advanced Operator Panel
APC	Advanced Positioning Control	Advanced positioning control
AR	Automatic Restart	Automatic restart
ASC	Armature Short-Circuit	Armature short-circuit
ASCII	American Standard Code for Information Interchange	American Standard Code for Information Interchange
ASM	Asynchronmotor	Induction motor
B		
BERO	-	Tradename for a type of contactless proximity switch
BI	Binector Input	Binector input
BIA	Berufsgenossenschaftliches Institut für Arbeitssicherheit	German Institute for Occupational Safety
BICO	Binector Connector Technology	Binector connector technology
BLM	Basic Line Module	Basic Line Module
BO	Binector Output	Binector output
BOP	Basic Operator Panel	Basic Operator Panel

Abbreviation	Derivation of abbreviation	Meaning
C		
C	Capacitance	Capacitance
C...	-	Safety message
CAN	Controller Area Network	Serial bus system
CBC	Communication Board CAN	CAN communication board
CD	Compact Disc	Compact Disc
CDS	Command Data Set	Command data set
CF Card	CompactFlash Card	CompactFlash card
CI	Connector Input	Connector input
CLC	Clearance Control	Clearance control
CNC	Computer Numerical Control	Computer numerical control
CO	Connector Output	Connector output
CO/BO	Connector Output/Binector Output	Connector output/Binector output
COB-ID	CAN Object-Identification	CAN object identification
COM	Common contact of a change-over relay	Common contact of a change-over relay
COMM	Commissioning	Commissioning
CP	Communications Processor	Communications processor
CPU	Central Processing Unit	Central processing unit
CRC	Cyclic Redundancy Check	Cyclic redundancy check
CSM	Control Supply Module	Control Supply Module
CU	Control Unit	Control Unit
D		
DAC	Digital Analog Converter	Digital Analog Converter
DC	Direct Current	Direct current
DCB	Drive Control Block	Drive Control Block
DCC	Drive Control Chart	Drive Control Chart
DCC	Data Cross-Check	Data cross-check
DCN	Direct Current Negative	Direct current negative
DCP	Direct Current Positive	Direct current positive
DDS	Drive Data Set	Drive data set
DI	Digital Input	Digital input
DI/DO	Digital Input/Digital Output	Bidirectional digital input/digital output
DMC	DRIVE-CLiQ Hub Module Cabinet	DRIVE-CLiQ Hub Module Cabinet
DME	DRIVE-CLiQ Hub Module External	DRIVE-CLiQ Hub Module External
DO	Digital Output	Digital output
DO	Drive Object	Drive object
DP	Distributed I/Os	Distributed I/Os
DPRAM	Dual-Port Random Access Memory	Dual-Port Random Access Memory

Abbreviation	Derivation of abbreviation	Meaning
DRAM	Dynamic Random Access Memory	Dynamic Random Access Memory
DRIVE-CLiQ	Drive Component Link with IQ	Drive Component Link with IQ
DSC	Dynamic Servo Control	Dynamic servo control
E		
EASC	External Armature Short-Circuit	External armature short-circuit
EDS	Encoder Data Set	Encoder data set
ELCB	Earth Leakage Circuit Breaker	Earth leakage circuit breaker
ELP	Earth Leakage Protection	Earth leakage protection
EMC	Electromagnetic Compatibility	Electromagnetic compatibility
EMF	Electromagnetic Force	Electromagnetic force
EN	Europäische Norm	European Standard
EnDat	Encoder-Data-Interface	Encoder interface
EP	Enable Pulses	Enable Pulses
EPOS	Einfachpositionierer	Basic positioner
ES	Engineering System	Engineering system
ESB	Ersatzschaltbild	Equivalent circuit diagram
ESD	Electrostatic Sensitive Devices	Electrostatic sensitive devices
ESR	Extended Stop and Retract	Extended stop and retract
F		
F...	Fault	Fault
FAQ	Frequently Asked Questions	Frequently asked questions
FBL	Free Blocks	Free function blocks
FCC	Function Control Chart	Function Control Chart
FCC	Flux Current Control	Flux current control
FD	Function Diagram	Function diagram
F-DI	Failsafe Digital Input	Failsafe digital input
F-DO	Failsafe Digital Output	Failsafe digital output
FEM	Fremderregter Synchronmotor	Separate-field synchronous motor
FEPROM	Flash-EPROM	Non-volatile write and read memory
FG	Function Generator	Function generator
FI	-	Fault current
FO	Fiber-Optic Cable	Fiber optic cable
FPGA	Field Programmable Gate Array	Field Programmable Gate Array
FW	Firmware	Firmware

Abbreviation	Derivation of abbreviation	Meaning
G		
GB	Gigabyte	Gigabyte
GC	Global Control	Global Control Telegram (Broadcast Telegram)
GND	Ground	Reference potential for all signal and operating voltages, usually defined with 0 V (also designated as M)
GSD	Gerätestammdatei	Device master file: describes the features of a PROFIBUS slave
GSV	Gate Supply Voltage	Gate supply voltage
GUID	Globally Unique Identifier	Globally unique identifier
H		
HF	High Frequency	High frequency
HFD	Hochfrequenzdrossel	High-frequency reactor
HMI	Human Machine Interface	Human Machine Interface
HTL	High-Threshold Logic	High-threshold logic
HW	Hardware	Hardware
I		
I/O	Input/Output	Input/Output
I2C	Inter Integrated Circuit	Internal serial data bus
IASC	Internal Armature Short-Circuit	Internal armature short-circuit
ID	Identifier	Identifier
IEC	International Electrotechnical Commission	International standard in electrical engineering
IF	Interface	Interface
IGBT	Insulated Gate Bipolar Transistor	Bipolar transistor with insulated control electrode
IGCT	Integrated Gate-Controlled Thyristor	Semiconductor circuit-breaker with integrated control electrode
IL	Impulslöschung	Pulse suppression
IP	Internet Protocol	Internet Protocol
IPO	Interpolator	Interpolator
IT	Isolé Terré	Insulated three-phase supply system
IVP	Internal Voltage Protection	Internal voltage protection
J		
JOG	Jogging	Jogging
K		
KIP	Kinetische Pufferung	Kinetic buffering

Abbreviation	Derivation of abbreviation	Meaning
Kp	-	Proportional gain
KTY	-	Special temperature sensor
L		
L	-	Formula symbol for inductance
LED	Light Emitting Diode	Light Emitting Diode
LIN	Linearmotor	Linear motor
LR	Lageregler	Position controller
LSB	Least Significant Bit	Least Significant Bit
LSC	Line-Side Converter	Line-Side Converter
LSS	Line Side Switch	Line Side Switch
LU	Length Unit	Length Unit
M		
M	-	Formula symbol for torque
M	Masse	Reference potential for all signal and operating voltages, usually defined with 0 V (also designated as GND)
MB	Megabyte	Megabyte
MCC	Motion Control Chart	Motion Control Chart
MDS	Motor Data Set	Motor data set
MLFB	Maschinenlesbare Fabrikatebezeichnung	Machine-readable product designation
MMC	Man-Machine Communication	Man-Machine Communication
MMC	Micro Memory Card	Micro Memory Card
MSB	Most Significant Bit	Most Significant Bit
MSC	Motor-Side Converter	Motor-Side Converter
MSCY_C1	Master Slave Cycle Class 1	Cyclic communication between master (class 1) and slave
MT	Messtaster	Probe
N		
N. C.	Not Connected	Not connected
N...	No Report	No report or internal message
NAMUR	Normenarbeitsgemeinschaft für Mess- und Regeltechnik in der chemischen Industrie	Standardization association for measurement and control in chemical indstries
NC	Normally Closed (contact)	Normally Closed (contact)
NC	Numerical Control	Numerical control
NEMA	National Electrical Manufacturers Association	Standards association in USA
NO	Normally Open (contact)	Normally Open (contact)
O		
OA	Open Architecture	Open Architecture

Abbreviation	Derivation of abbreviation	Meaning
OC	Operating Condition	Operating condition
OEM	Original Equipment Manufacturer	Original Equipment Manufacturer
OLP	Optical Link Plug	Optical link plug
OMI	Option Module Interface	Option Module Interface
P		
p...	-	Setting parameter
PB	PROFIBUS	PROFIBUS
PcCtrl	PC Control	Master control
PD	PROFIdrive	PROFIdrive
PDS	Power unit Data Set	Power unit data set
PE	Protective Earth	Protective Earth
PELV	Protective Extra Low Voltage	Protective Extra Low Voltage
PEM	Permanenterregter Synchronmotor	Permanent-field synchronous motor
PG	Programmiergerät	Programming device
PI	Proportional Integral	Proportional Integral
PID	Proportional Integral Differential	Proportional Integral Differential
PLC	Programmable Logic Controller	Programmable logic controller
PLL	Phase-Locked Loop	Phase-Locked Loop
PN	PROFINET	PROFINET
PNO	PROFIBUS Nutzerorganisation	PROFIBUS User Organization (PROFIBUS International)
PPI	Point to Point Interface	Point to point interface
PRBS	Pseudo Random Binary Signal	Pseudo Random Binary Signal
PROFIBUS	Process Field Bus	Serial data bus
PS	Power Supply	Power supply
PSA	Power Stack Adapter	Power stack adapter
PTC	Positive Temperature Coefficient	Positive Temperature Coefficient
PTP	Point-To-Point	Point-to-point
PWM	Pulse Width Modulation	Pulse width modulation
PZD	Prozessdaten	Process data
Q		
R		
r...	-	Display parameter (read only)
RAM	Random Access Memory	Read and write memory
RCCB	Residual Current Circuit Breaker	Residual current circuit breaker
RCD	Residual Current Device	Residual current device
RFG	Ramp-Function Generator	Ramp-function generator

Abbreviation	Derivation of abbreviation	Meaning
RJ45	Registered Jack 45	Describes an 8-pole connector system for data transfer with shielded or unshielded multicore copper cables
RKA	Rückkühlanlage	Cooling unit
RO	Read Only	Read only
RPDO	Receive Process Data Object	Receive Process Data Object
RS232	Recommended Standard 232	Interface standard for conducted serial data transfer between a transmitter and a receiver (also designated as EIA232)
RS485	Recommended Standard 485	Interface standard for a conducted differential, parallel and/or serial bus system (data transfer between several transmitters and receivers, also designated as EIA485)
RTC	Real Time Clock	Real time clock
S		
S1	-	Continuous duty
S3	-	Intermittent duty
SBC	Safe Brake Control	Safe brake control
SBH	Sicherer Betriebshalt	Safe Operating Stop
SBR	-	Safe Acceleration Monitor
SCA	Safe Cam	Safe cam
SD Card	SecureDigital Card	Secure Digital Card
SE	Sicherer Software-Endschalter	Safe software limit switch
SG	Sicher reduzierte Geschwindigkeit	Safely reduced speed
SGA	Sicherheitsgerichteter Ausgang	Safety-related output
SGE	Sicherheitsgerichteter Eingang	Safety-related input
SH	Sicherer Halt	Safe standstill
SP	Safety Integrated	Safety Integrated
SIL	Safety Integrity Level	Safety Integrity Level
SLM	Smart Line Module	Smart Line Module
SLP	Safely-Limited Position	Safely-Limited Position
SLS	Safely-Limited Speed	Safely Limited Speed
SLVC	Sensorless Vector Control	Sensorless Vector Control
SM	Sensor Module	Sensor Module
SMC	Sensor Module Cabinet	Sensor Module Cabinet
SME	Sensor Module External	Sensor Module External
SN	Sicherer Software-Nocken	Safe software cam
SOS	Safe Operating Stop	Safe operating stop
SP	Service Pack	Service pack
SPC	Setpoint Channel	Setpoint channel

Abbreviation	Derivation of abbreviation	Meaning
SPI	Serial Peripheral Interface	Serial I/O interface
SS1	Safe Stop 1	Safe Stop 1 (time-monitored, ramp-monitored)
SS2	Safe Stop 2	Safe Stop 2
SSI	Synchronous Serial Interface	Synchronous serial interface
SSM	Safe Speed Monitor	Safe feedback from speed monitor (n < nx)
SSR	Safe Stop Ramp	Safe brake ramp
STO	Safe Torque Off	Safely switched-off torque
STW	Steuerwort	Control word
SVA	Space-vector approximation	Space-vector approximation
T		
TB	Terminal Board	Terminal Board
TIA	Totally Integrated Automation	Totally Integrated Automation
TM	Terminal Module	Terminal Module
TN	Terre Neutre	Grounded three-phase supply system
Tn	-	Integral time
TPDO	Transmit Process Data Object	Transmit Process Data Object
TT	Terre Terre	Grounded three-phase supply system
TTL	Transistor-Transistor Logic	Transistor-Transistor-Logic
Tv	-	Derivative action time
U		
UL	Underwriters Laboratories Inc.	Underwriters Laboratories Inc.
UPS	Uninterruptible Power Supply	Uninterruptible power supply
V		
VC	Vector Control	Vector control
Vdc	-	DC link voltage
VdcN	-	Partial DC link voltage negative
VdcP	-	Partial DC link voltage positive
VDE	Verband Deutscher Elektrotechniker	Association of German Electrical Engineers
VDI	Verein Deutscher Ingenieure	Assocation of German Engineers
VPM	Voltage Protection Module	Voltage Protection Module
Vpp	Volt peak to peak	Volt peak to peak
VSM	Voltage Sensing Module	Voltage Sensing Module
W		
WZM	Werkzeugmaschine	Machine tool
X		
XML	Extensible Markup Language	Extensible Markup Language (standard language for Web publishing and document management)

Abbreviation	Derivation of abbreviation	Meaning
Y		
Z		
ZK	Zwischenkreis	DC link
ZM	Zero Mark	Zero mark
ZSW	Zustandswort	Status word

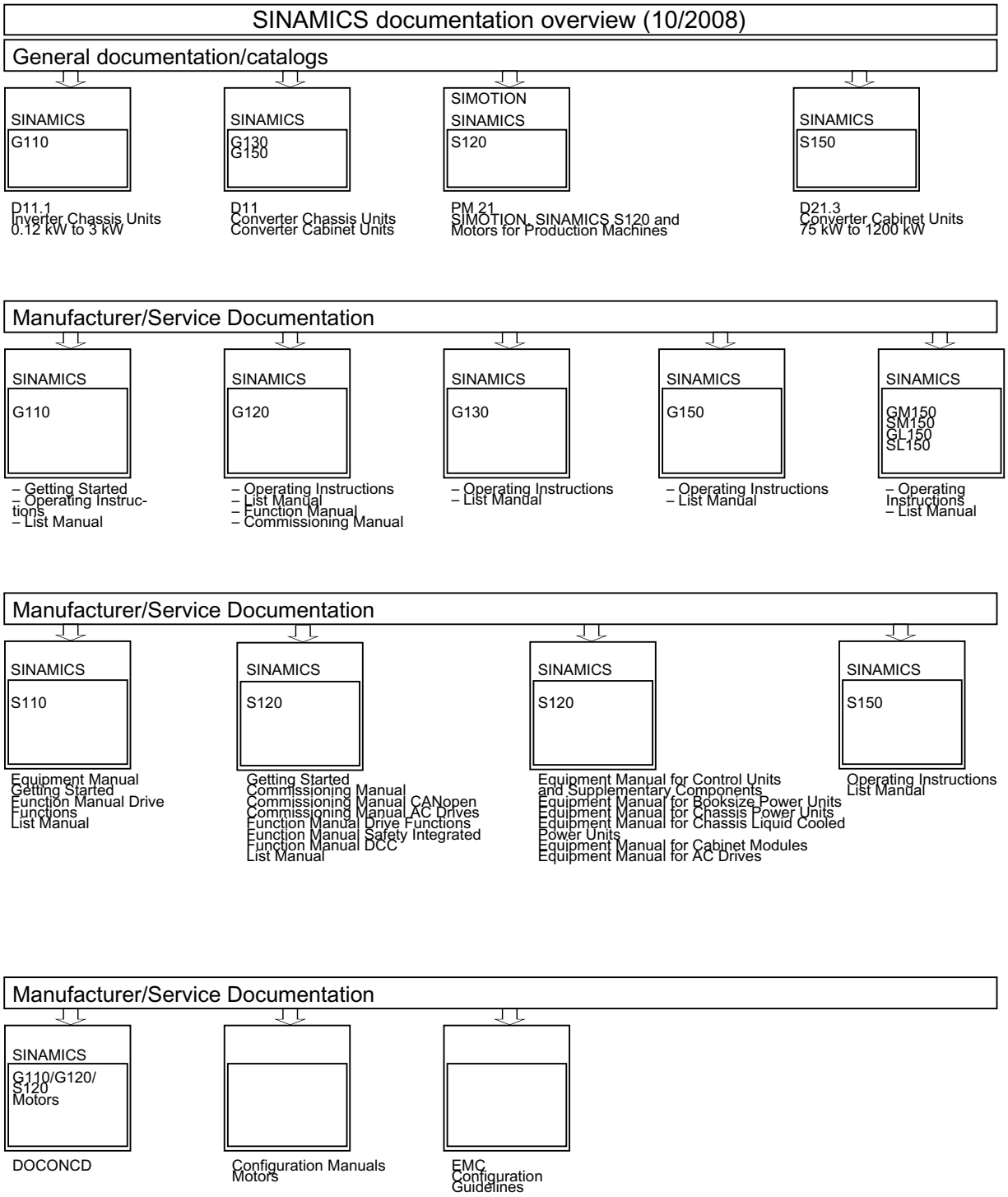
SINAMICS documentation overview (10/2008)
General documentation/catalogs
SINAMICS
G110
D11.1
Inverter Chassis Units
0.12 kW to 3 kW
SINAMICS
G130
G150
D11
Converter Chassis Units
Converter Cabinet Units
SIMOTION
SINAMICS
S120
PM 21
SIMOTION, SINAMICS S120 and
Motors for Production Machines
SINAMICS
S150
D21.3
Converter Cabinet Units
75 kW to 1200 kW
Manufacturer/Service Documentation
SINAMICS
G110
– Getting Started
– Operating Instruc-
tions
– List Manual
SINAMICS
G120
– Operating Instructions
– List Manual
– Function Manual
– Commissioning Manual
SINAMICS
G130
– Operating Instructions
– List Manual
SINAMICS
G150
– Operating Instructions
– List Manual
SINAMICS
GM150
SM150
GL150
SL150
– Operating
Instructions
– List Manual
Manufacturer/Service Documentation
SINAMICS
S110
Equipment Manual
Getting Started
Function Manual Drive
Functions
List Manual
SINAMICS
S120
Getting Started
Commissioning Manual
Commissioning Manual CANopen
Commissioning Manual AC Drives
Function Manual Drive Functions
Function Manual Safety Integrated
Function Manual DCC
List Manual
SINAMICS
S120
Equipment Manual for Control Units
and Supplementary Components
Equipment Manual for Booksize Power Units
Equipment Manual for Chassis Power Units
Equipment Manual for Chassis Liquid Cooled
Power Units
Equipment Manual for Cabinet Modules
Equipment Manual for AC Drives
SINAMICS
S150
Operating Instructions
List Manual
Manufacturer/Service Documentation
SINAMICS
G110/G120/
S120
Motors
DOCONCD
Configuration Manuals
Motors
EMC
Configuration
Guidelines

If you come across any misprints in this document, please let us know using this form. We would also be grateful for any suggestions and recommendations for improvement.

To: SIEMENS AG I DT MC MS1 P.O. Box 3180 D-91050 Erlangen, Federal Republic of Germany Fax: +49 (0) 9131 / 98 - 2176 (documentation) mailto:docu.motioncontrol@siemens.com http://www.siemens.com/automation/service&support	From Name:
	Address of your Company/Dept.
	Street:
	Postal code: Location:
	Phone: /
	Fax: /

Suggestions and/or corrections

Index

A

Absolute encoder
  Adjustment, 232
Acceptance test
  SBC, 371
  SLS, 379
  SS1 (time controlled), 370
  SS1, time and acceleration controlled, 373
  SS2, 375
  SSM, 380
  STO, 368
Acceptance test mode
  Safety Integrated, 361
Access levels, 465
Acknowledgment, 103
Actual position value format
  2-pole resolver, 32
Actual value acquisition, 326
Address
  License manager on the Internet, 487
  Setting the PROFIBUS address, 453
Adjustment
  Absolute encoder, 232
Alarm buffer, 105, 324
Alarm classes
  Faults and alarms, 109
Alarm history, 105, 324
Alarm value, 105, 324
Alarms, 102
  Alarm buffer, 105, 324
  Alarm history, 105, 324
  configure, 106
Analog inputs, 481
  Properties, 485
  Signal processing, 485
Analog outputs, 481
Application classes, 384
Armature short-circuit brake, 179
Armature short-circuit braking
  external, 180
ASCII code
  Licensing, 489
Automatic restart, 177
Axis
  Suspended/hanging, 170

B

Basic Positioner, 222
Basic positioning
  Referencing, 231
BICO technology
  Converters, 479
  Fixed values, 479
  Interconnecting signals, 477
  What is it?, 475
Bidirectional inputs/outputs, 481
Binector, 476
BOP20
  Control word, drive, 118
  Important functions, 52, 53
Brake control
  Basic, 184
  extended, 202

C

Cam controllers, 217
CBC10, 67
Central probe
  Example, 433
Closed-loop position control, 207
Commissioning
  Checklist, 39
  General, 343
  PROFIsafe with STARTER, 351
  Safety Integrated, 343
  Safety terminals, 345
  with STARTER, 48
Communication
  about PROFIdrive, 383
  via PROFIBUS, 450
Communication Board, 67
Connector, 476
Control Unit
  LEDs during booting, 85
Controller setting, automatic
  Servo, 142
Current setpoint filter
  Servo, 132

D

Data sets
Command data set (CDS), 466
Drive data set (DDS), 467
Encoder data set (EDS), 468
Motor data set (MDS), 468
Detail view, 21
Determining the axis number, 444
Determining the object number, 444
Device identification, 454
Diagnosis
using LEDs on Sensor Module Cabinet 10, 88
using LEDs on Sensor Module Cabinet 20, 88
Diagnostic function, 90
Function generator, 90
Measuring sockets, 98
Trace, 94
V/f control for servo control, 139
Diagnostics
using LEDs on Sensor Module Cabinet SMC30, 89
Digital inputs, 481
Bidirectional, 484
If they are not functioning, 482
Properties, 482
Signal processing, 482
Digital outputs, 481
Bidirectional, 484
Properties, 483
Signal processing, 483
Direct setpoint input (MDI), 247
Direction reversal, 192
Dynamic Servo Control, 162

E

Encoder
External, 164
Encoder interface, 417
Find reference mark, 420
Flying measurement, 421
Encoder systems, 326
Encoder types, 327
EPOS, 222
Absolute encoder adjustment, 32
Direct setpoint input (MDI), 247
Flying referencing, 236
Intermediate stop, 240, 249
Jog, 250
Limits, 226
Mechanical system, 224
Reject traversing task, 240, 249
Traversing blocks, 238
ESD information, 9
Example
Setting the PROFIBUS address, 453

F

F parameters, 353
Fault buffer, 104
Fault response, 320
Fault value, 104
FAULT_CODE, 415
Faults, 102
Acknowledgment, 103
configure, 106
Fault buffer, 104
Faults and alarms, 109
Alarm classes, 109
BICO interconnections, 109
F-DI, 331
F-DO, 331
Find reference mark, 420
Fixed setpoints, 259
Fixed speed setpoints, 259
Flying measurement, 421
Flying referencing
EPOS, 236
Following error monitoring
Dynamic, 217
Forced dormant error detection, 306, 329
Free PDO mapping, 72
Free telegrams, 389
Function generator
Properties, 91
Function module
Closed-loop position control, 207
Extended brake control, 202
Function modules, 193
Extended monitoring functions, 199
Technology controller, 194
Function test, 329
Functions
Fixed speed setpoints, 259
Jog, 255
Motorized potentiometer, 260
Safe brake control (SBC), 302
Safe Torque Off, 298
Servo control, 119
Travel to fixed stop, 165
V/f control for servo control, 139

G

Generator for signals, 90

H

Heartbeat, 69, 81
Hotline, 7

I

Inputs/outputs
    Overview, 481
Interconnection using BICO technology, 477
Intermediate stop
    EPOS, 240, 249

J

Jerk limitation, 229
Jog, 255
    EPOS, 250
JOG
    Jog, 255

K

Kinetic buffering, 159

L

LEDs
    for Sensor Module Cabinet SMC30, 89
    on CU305 CAN Control Unit, 86
    on CU305 DP Control Unit, 86
    on Sensor Module Cabinet 10, 88
    on Sensor Module Cabinet 20, 88
License key, 487
Limit exceeded, 320
Limits
    Torque setpoint, 126

M

Main/supplementary setpoint, 262
Manufacturer-specific telegrams, 389
Maximum acceleration, 227
Maximum deceleration, 227
Maximum velocity, 227
Measuring sockets, 98
Message buffer, 324
Messages, 102
    External triggering, 107
    Triggering on, 107
Monitoring functions
    extended, 199
Motion Control with PROFIBUS, 434
Motorized potentiometer, 260

N

Node guarding, 69, 81

O

OFF3
    Torque limits, 183
Online operation with STARTER, 51
Operating hours counter, 186
Operation without an encoder
    Servo, 143

P

p8604, 80, 81
p8609, 81
p8641, 81
Parameterization
    using the BOP, 111
Parameterize
    with STARTER, 48
Parameters
    Categories, 463
    Types, 463
PFH value, 294
Pole position identification
    Servo, 155
Position controller, 216
    Monitoring functions, 217
Position tracking
    2-pole resolver, 32
    Load gear, 210
Positioning monitoring, 217
Predefined connection set, 72
Probability of failure, 294
probe
    central, 433
Probe
    Central, 433
Process data, 391

Process data, actual values
G1_XIST1, 404, 423
G1_XIST2, 404, 424
G2_XIST1, 404, 426
G2_XIST2, 404, 426
NACT_A, 404, 410
NACT_B, 404, 410
Process data, control words
A_DIGITAL, 388, 430
CU_STW, 429
G1_STW, 392
G2_STW, 392, 421
G3_STW, 388
Gn_STW, 418
MDI_ACC, 402
MDI_DEC, 402
MDI_MOD, 402, 403
MDI_TARPOS, 402
MDI_VELOCITY, 402
MDIAcc, 392
MDIDec, 392
MDIMode, 392, 393
MDIPos, 392
MDIVel, 392
MT_STW, 430
Over, 393
OVERRIDE, 402
POS_STW, 399
POS_STW1, 393
POS_STW2, 393
PosSTW, 393
SATZANW, 392, 398
SI STW (PROFIsafe STW), 340
STW1, 388, 392, 393
STW1 (positioning mode), 395
STW2, 388, 392, 396
Process data, setpoints
KPC, 388
MOMRED, 388, 393, 398
NSOLL_A, 388, 392, 397
NSOLL_B, 388, 392, 397
Process data, status words
AKTSATZ, 404
CU_ZSW, 431
E_DIGITAL, 432
G1_ZSW, 404
G2_ZSW, 404, 426
Gn_ZSW, 422
MELDW, 405, 411
MT_ZSW, 432
POS_ZSW, 414
PosZSW, 405
SI ZSW (PROFIsafe ZSW), 341
XistP, 404
ZSW1, 404, 406
ZSW2, 404, 410
PROFIBUS, 450
Components, 40
Device identification, 454
Device master file, 454
Interface Mode, 391
Master class 1 and 2, 451
Motion Control with PROFIBUS, 434
Setting the address, 453
Sign of life, 462
Telegrams, 389
Terminating resistor, 454
PROFIdrive, 383
Controller, Supervisor, Drive Unit, 383
read parameters, 445
Write parameter, 447
Profile velocity mode, 69
PROFIsafe, 331
PROFIsafe slot, 352
Project navigator, 21

R

Ramp-function generator, 79
Ramp-function generator, extended, 266
Recorder, 94
Reference variables
Disabling/protecting, 175
Referencing
Basic positioning, 231
Requirements
Extended Functions, 288
Residual risk, 296
Resolver
2-pole, 32
Response times, 295

S

Safe Acceleration Monitor
SBR, 318
Safe actual value acquisition, 326
Safe Brake Control
SBC, 303
Safe Operating Stop
SOS, 312
Safe Speed Monitor
SSM, 316

Safe Stop 1
SS1, 301, 307
Time and acceleration controlled, 307
time controlled, 301
Safe Stop 2
SS2, 310
Safely Limited Speed
SLS, 313
Safety Integrated
Acceptance test mode, 361
Commissioning, 343
Password, 290
Safe brake control (SBC), 302
Safe Stop 1, 301
Safe Torque Off, 298
Series commissioning, 344
Safety Integrated Basic Functions
Stop responses, 304
Safety Integrated password, 290
Safety logbook, 364
Safety terminals, 331
Commissioning, 345
Sampling times, 486
SBC
Acceptance test, 371
Safe Brake Control, 303
SBR
Safe Acceleration Monitor, 318
Servo
Automatic controller setting, 142
Encoderless operation, 143
Vdc control, 159
Servo control, 119
Activate setpoint channel, 253
Current controller, 130
Optimization, 142
Speed controller, 119
Torque setpoint, 126
Torque-controlled operation, 123
Travel to fixed stop, 165
V/f control, 139
Servo current controller
Closed-loop current control, 130
Current and torque limitation, 130
Current controller adaptation, 130
Setpoint channel
Direction of rotation limiting, 263
Direction reversal, 263
extended, 254
Fixed speed setpoints, 259
Jog, 255
Main/supplementary setpoint, 262
Motorized potentiometer, 260
Ramp-function generator, extended, 266
Servo amplifier, 253
Setpoint limitation, 264
Setpoint modification, 262
Suppression bandwidths, 264
with, 79
without, 79
Setpoint modification, 262
Setpoint sources, 254
Signal recording with the trace function, 90
SINAMICS drive unit, 352
Single-encoder system, 326
Singleturn absolute encoder, 32
SLS
Acceptance test, 379
Safely Limited Speed, 313
Sockets for measurement, 98
Software limit switches, 228
SOS
Acceptance test, 377
Safe Operating Stop, 312
Speed controller
Limitations, 119
Properties, 119
Speed controller adaptation, 121
Speed setpoint filter, 120
SS1
Safe Stop 1, 301, 307
SS1 (time controlled)
Acceptance test, 370
Safe Stop 1, 301
SS1, time and acceleration controlled
Acceptance test, 373
Safe Stop 1, 307
SS2
Acceptance test, 375
Safe Stop 2, 310
SSM
Acceptance test, 380
Safe Speed Monitor, 316
Standard telegrams, 389
STARTER, 48
Connection via serial interface, 41
Important functions, 48
Online operation via PROFIBUS, 51
STARTER toolbars
display, 50
STO
Acceptance test, 368
Safe Torque Off, 298

STOP A, 304, 320
STOP B, 320
STOP C, 320
Stop cam, 228
STOP D, 320
STOP E, 320
STOP F, 304, 320
Stop response
    Stop A, 304
    Stop F, 304
Stop responses, 320
    Priorities vis-à-vis Extended Functions, 322
    Priority classes, 321
Support, 7
Switches for PROFIBUS address, 453
Switching on inhibited, 406, 408
Switchover
    Fixed speed setpoints, 259
Synchronous motors
    External armature short-circuit, 179, 180
    Internal armature short-circuit, 179
System runtime, 186
System sampling times, 486

T

T0, T1, 98
Technology controller, 194
Telegram 111
    POS_ZSW1, 415
    POS_ZSW2, 416
Telegram 371
    STW1, 393
Telegrams
    Layout, 391
    Manufacturer-specific, 389
    Standard, 389
    User-defined, 389
Temperature sensors
    SINAMICS components, 33
Test of shutdown paths, 306
Test stop, 329
Tools
    STARTER, 48
Torque limits
    OFF3, 183
Torque setpoint, 126
Torque-controlled operation, 123
Trace, 94
Trace function, 94
    Signal recording, 90
Travel to fixed stop, 165
Traversing blocks, 238
Traversing task
    reject, 240
    Reject, 249
Two-encoder system, 326

U

Unit changeover, 173
User interface, 21

V

V/f control
    Servo control, 139
Vdc control
    Servo, 159
Vdc_min control
    Servo, 160
Voltage boost
    Servo, 141
Voltage protection
    Internal, 179

W

WARN_CODE, 415
Working area, 21

Siemens AG
Industry Sector
Drive Technologies
Motion Control Systems
P. O. Box 3180
91050 ERLANGEN
GERMANY

www.siemens.com/motioncontrol

Subject to change without prior notice
© Siemens AG 2008