E6581301④

TOSHIBA

Instruction Manual

The new high-performance inverter

TOSVERT™ VF-AS1

200V class	0.4～75kW
400V class	0.75～500kW

NOTICE

1. Make sure that this instruction manual is delivered to the end user of the inverter unit.
2. Read this manual before installing or operating the inverter unit, and store it in a safe place for reference.

Safety precautions I
Introduction II
Contents
Read first 1
Connection equipment 2
Operations 3
Searching and setting parameters 4
Basic parameters 5
Extended parameters 6
Operation with external signal 7
Monitoring the operation status 8
Taking measures to satisfy the CE/UL/CSA standards 9
Selection of peripheral devices 10
Table of parameters 11
Specifications 12
Before making a service call 13
Inspection and maintenance 14
Warranty 15
Disposal of the inverter 16

I. Safety precautions

The items described in these instructions and on the inverter itself are very important so that you can use the inverter safely prevent injury to yourself and other people around you as well as prevent damage to property in the area. Thoroughly familiarize yourself with the symbols and indications shown below and then continue to read the manual. Make sure that you observe all cautions given.

Explanation of markings

Marking	Meaning of marking
⚠ Warning	Indicates that errors in operation may lead to death or serious injury.
⚠ Caution	Indicates that errors in operation may lead to injury (*1) to people or that these errors may cause damage to physical property. (*2)

(*1) Such things as injury, burns or shock that will not require hospitalization or long periods of outpatient treatment.
(*2) Physical property damage refers to wide-ranging damage to assets and materials.

Meanings of symbols

Marking	Meaning of marking
⃠	Indicates prohibition (Don't do it). What is prohibited will be described in or near the symbol in either text or picture form.
❗	Indicates something mandatory (must be done). What is mandatory will be described in or near the symbol in either text or picture form.
△	•Indicates warning. What is warned will be described in or near the symbol in either text or picture form. •Indicates caution. What the caution should be applied to will be described in or near the symbol in either text or picture form.

■ Limits in purpose

This inverter is used for controlling speeds of three-phase induction motors in general industrial use.

⚠ Safety precautions

▼The inverter cannot be used in any device that would present danger to the human body or which a malfunction or error in operation would present a direct threat to human life (nuclear power control device, aviation and space flight control device, traffic device, life support or operation system, safety device, etc.). If the inverter is to be used for any special purpose, first get in touch with the supplier.

▼When using inverters for critical equipment, even though the inverters are manufactured under strict quality control always fit your equipment with safety devices to prevent serious accident or loss should the inverter fail (such as failure to issue an inverter trouble signal)

▼Do not use the inverter for loads other than those of properly applied three-phase induction motors in general industrial use.
(Use in other than properly applied three-phase induction motors may cause an accident.)
When the inverter is used to control the operation of a permanent magnet motor, a combination test must be conducted in advance. For details on the test, contact your supplier.

I

■ General Operation

Warning		Reference
Disassembly prohibited	• Never disassemble, modify or repair. This can result in electric shock, fire and injury. For repairs, call your sales agency.	2.
Prohibited	• Never remove the front cover when power is on or open door if enclosed in a cabinet. The unit contains many high voltage parts and contact with them will result in electric shock. • Don't stick your fingers into openings such as cable wiring hole and cooling fan covers. This can result in electric shock or other injury. • Don't place or insert any kind of object into the inverter (electrical wire cuttings, rods, wires). This can result in electric shock or fire. • Do not allow water or any other fluid to come in contact with the inverter. This can result in electric shock or fire.	2. 2. 2. 2.
Mandatory	• Turn power on only after attaching the front cover or closing door if enclosed in a cabinet. If power is turned on without the front cover attached or closing door if enclosed in a cabinet, this can result in electric shock or other injury. • If the inverter begins to emit smoke or an unusual odor, or unusual sounds, immediately turn power off. If the equipment is continued to operate in such a state, the result may be fire. Call your local sales agency for repairs. • Always turn power off if the inverter is not used for long periods of time since there is a possibility of malfunction caused by leaks, dust and other material. The leakage current caused by the contamination may result in fire.	2. 3. 3. 3.

Caution		Reference
Prohibited contact	• Do not touch any radiating fins or radiating resistors. They can become very hot, and you may get burned if you touch them.	3.

■ Transportation & installation

⚠ Warning		Reference
Prohibited	• Do not install or operate the inverter if it is damaged or any component is missing. This can result in electric shock or fire. Please consult your local sales agency for repairs. • Do not place any inflammable objects nearby. If a flame is emitted due to malfunction, it may result in a fire. • Do not install in any location where the inverter could come into contact with water or other fluids. This can result in electric shock or fire.	2. 1.4.4 2.
Mandatory	• Must be used in the environmental conditions prescribed in the instruction manual. Use under any other conditions may result in malfunction. • Must be installed in non-inflammables such as metals. The rear panel gets very hot. If installation is in an inflammable object, this can result in fire. • Do not operate with the front panel cover removed. Doing so could result in electric shock. • An emergency stop device must be installed that fits with system specifications (e.g. shut off input power then engage mechanical brake). Operation cannot be stopped immediately by the inverter alone, thus risking an accident or injury. • All options used must be those specified by Toshiba. The use of any other option may result in an accident.	1.4.4 1.4.4 1.4.4 10. 1.4.4 1.4.4

⚠ Caution		Reference
Prohibited	• When operating, do not hold by the front panel covers. The covers may come off and the unit will drop out resulting in injury. • Do not install in any area where the unit would be subject to large amounts of vibration. That could result in the unit falling, resulting in injury. • ..Do not expose the drive to halogen group disinfectants. Failure to comply may cause damage to the electrical components in the drive.	2. 1.4.4
Mandatory	• Models (20kg or more in weight) designed for 200V-18.5kW or larger and 400V-22kW or larger should be carried by 2 people more, or it could fall and cause an injury. • Handle large capacity models using a crane. Lifting heavy inverters can cause injury to persons. Taking care of safety for users, handle carefully in order not to damage the inverter. Carefully lift up the inverter, hanging wires on the hanging bolts or holes on the top or bottom of the inverter. Note 1: Always keep the two sling ropes in balance when lifting the inverter, and take care that unexpected force does not apply to the inverter during lifting. Note 2: Always protect the inverter with a cover when transporting it. Note 3: Do not put your hand in the wiring port or do not hold it when transporting the inverter. • The main unit must be installed on a base that can bear the unit's weight. If the unit is installed on a base that cannot withstand that weight, the unit may fall resulting in injury. • Install a mechanical brake whenever the motor requires a brake (device which retains the motor shaft). Failure to do so could lead to injury to persons because the inverter itself has no function of mechanically retaining the brake shaft.	2. 1.4.4 1.4.4

I

■ Wiring

⚠ Warning		Reference
Prohibited	• Do not connect input power to the output (motor side) terminals (U/T1,V/T2,W/T3). That will destroy the inverter and may result in fire. • Do not connect resistors to the DC terminals (between PA/+ and PC/-, or between PO and PC/-). That may cause a fire. Connect resistors as directed by the instructions for “Installing separate braking resistors.” • Within 15 minutes after turning off input power, do not touch wires of devices (MCCB) connected to the input side of the inverter. That could result in electric shock.	2.2 2.2 5.19 2.2
Mandatory	• Electrical construction work must be done by a qualified expert. Connection of input power by someone who does not have that expert knowledge may result in fire or electric shock. • Connect output terminals (motor side) correctly. If the phase sequence is incorrect, the motor will operate in reverse and that may result in injury. • Wiring must be done after installation. If wiring is done prior to installation that may result in injury or electric shock. • The following steps must be performed before wiring. (1) Turn off all input power to the inverter. (2) Wait at least 15 minutes and check to make sure that the charge lamp is no longer lit. (3) Use a tester that can measure DC voltage 800VDC or more, and check to make sure that the voltage to the DC main circuits (between PA/+ and PC/-) is 45V or less. If these steps are not properly performed, the wiring will cause electric shock. • Tighten the screws on the terminal board to specified torque. If the screws are not tightened to the specified torque, it may lead to fire. • Check to make sure that the input power voltage is +10%, -15% of the rated power voltage written on the rating label (±10% when the load is 100% in continuous operation). If the input power voltage is not +10%, -15% of the rated power voltage (±10% when the load is 100% in continuous operation) this may result in fire.	2. 2. 2. 2. 2. 1.4.4
Be Grounded	• Ground must be connected securely. If the ground is not securely connected, it could lead to electric shock or fire when a malfunction or current leak occurs.	2. 2.2 10.

⚠ Caution		Reference
Prohibited	• Do not attach equipment (such as noise filters or surge absorbers) that have built-in capacitors to the output (motor side) terminals. That could result in a fire.	2.1

⚠ Caution	
Caution	• Charged capacitors can present a shock hazard even after source power is removed. • Drives with EMC filters will retain a charge on the input terminals for up to 15 min. after the power has been removed. To avoid electrical shock, don’t touch the connector terminals and uninsulated source cables at either the main circuit disconnect or the drive until the capacitive charge has dissipated.

■ Operations

Warning		Reference
Prohibited	• Do not touch inverter terminals when electrical power is applied to the inverter even if the motor is stopped. Touching the inverter terminals while power is connected to it may result in electric shock. • Do not touch switches when thands are wet and do not try to clean the inverter with a damp cloth. Such practices may result in electric shock. • Do not go near the motor in alarm-stop status when the retry function is selected. The motor may suddenly restart and that could result in injury. Take measures for safety, e.g. attaching a cover to the motor, against accidents when the motor unexpectedly restarts. • The inverter is tuned automatically (auto-tuning F400=2, 3) when the inverter is started for the first time after setup. During auto-tuning, which takes several seconds, the motor is energized, although it is standing still. Noise may be produced by the motor during auto-tuning, which, however, does not indicate that something is wrong with the inverter or the motor. • Do not set the stall prevention level (F601) extremely low. If the stall prevention level parameter (F601) is set at or below the no-load current of the motor, the stall preventive function will always be active and increase the frequency when it judges that regenerative braking is taking place. Do not set the stall prevention level parameter (F601) below 30% under normal use conditions.	3. 3. 3. 6.22 6.33.1
Mandatory	• Do not turn on the power before attaching the front cover. When storing inside the cabinet and using with the front cover removed, always close the cabinet doors first and then turn power on. If the power is turned on with the front cover or the cabinet doors open, it may result in electric shock. • Make sure that operation signals are off before resetting the inverter after malfunction. If the inverter is reset before turning off the operating signal, the motor may restart suddenly causing injury. • Provide cranes and hoists with sufficient circuit protection such as mechanical braking. Without sufficient circuit protection, the resulting insufficient motor torque during tuning could create a risk of machine stalling/falling.	3. 10. 3. 6.22

Caution		Reference
Mandatory	• Observe all permissible operating ranges of motors and mechanical equipment. (Refer to the motor's instruction manual) Not observing these ranges may result in injury.	3.

When sequence for restart after a momentary failure is selected

Caution		Reference
Mandatory	• Stand clear of motors and mechanical equipment. If the motor stops due to a momentary power failure, the equipment will start suddenly when power is restored. This could result in unexpected injury. • Attach cautions about sudden restart after a momentary power failure on inverters, motors and equipment for prevention of accidents in advance.	5.18.1

When retry function is selected

Caution		Reference
Mandatory	• Stand clear of motors and equipment. If the motor and equipment stop when the alarm is given, selection of the retry function will restart them suddenly after the specified time has elapsed and alarm condition has disappeared. This could result in unexpected injury. • To prevent accidents, stick caution notices that the inverter has a retry function to the inverter, the motor and the machine.	6.14.1

I

Maintenance and inspection

	Warning	Reference
Prohibited	• Never replace any part by yourself. This could be a cause of electric shock, fire and bodily injury. To replace parts, call the local sales agency.	14.2
Mandatory	• The equipment must be inspected every day. If the equipment is not inspected and maintained, errors and malfunctions may not be discovered which could lead to accidents. • Before inspection, perform the following steps. (1) Turn off all input power to the inverter. (2) Wait at least 15 minutes and check to make sure that the charge lamp is no longer lit. (3) Use a tester that can measure DC voltage 800VDC or more, and check to make sure that the voltage to the DC main circuits (between PA/+ and PC/-) is 45V or less. If inspection is performed without performing these steps first, it could lead to electric shock.	14. 14. 14.2

Disposal

	Caution	Reference
Mandatory	• If you throw away the inverter, have it done by a specialist in industry waste disposal*. If you throw away the inverter by yourself, this can result in explosion of capacitor or produce noxious gases, resulting in injury. (*) Persons who specialize in the processing of waste and known as “industrial waste product collectors and transporters” or “industrial waste disposal persons.” If the collection, transport and disposal of industrial waste is done by someone who is not licensed for that job, it is a punishable violation of the law. (Laws in regard to cleaning and processing of waste materials)	16.

Attach caution labels

Shown here are examples of caution labels to prevent, in advance, accidents in relation to inverters, motors and other equipment.
If the inverter has been programmed for auto-restart function after momentary power failure or retry function, place caution labels in a place where they can be easily seen and read.

If the inverter has been programmed for restart sequence of momentary power failure, place caution labels in a place where they can be easily seen and read.
(Example of caution label)

Caution
(Functions programmed for restart)

Do not go near motors and equipment.
Motors and equipment that have stopped temporarily after momentary power failure will restart suddenly after recovery.

If the retry function has been selected, place caution labels in a location where they can be easily seen and read.
(Example of caution label)

Caution
(Functions programmed for retry)

Do not go near motors and equipment.
Motors and equipment that have stopped temporarily after an alarm will restart suddenly after the specified time has elapsed and alarm condition has disappeared.

II. Introduction

Thank you for your purchase of the Toshiba “TOSVERT VF-AS1” industrial inverter.

This instruction manual is intended for inverters with CPU version 150 or later.
The CPU version will be frequently upgraded.

- Contents -

I. Safety precautions 1
I I. Introduction 7

1. Read first A-1
1.1 Check the product A-1
1.2 Contents of the product code A-1
1.3 Structure of the main body A-2
1.3.1 Names and functions A-2
1.3.2 Detaching the cover A-9
1.3.3 Grounding capacitor switching method A-12
1.3.4 Installing the DC reactor A-16
1.4 Notes on the application A-17
1.4.1 Motors A-17
1.4.2 Inverters A-19
1.4.3 What to do about the leak current A-20
1.4.4 Installation A-22

2. Connection equipment B-1
2.1 Cautions on wiring B-1
2.2 Standard connections B-3
2.3 Description of terminals B-10
2.3.1 Main circuit terminals B-10
2.3.2 Control circuit terminal block B-11
2.3.3 Serial RS485 communication connector B-16

3. Operations C-1
3.1 Setting/monitor modes C-2
3.2 Simplified operation of the VF-AS1 ..... C-3
3.2.1 Terminal board operation C-3
3.2.2 Panel operation C-7

4. Searching and setting parameters D-1
4.1 How to set parameters D-2
4.1.1 Setting parameters in the selected quick mode D-2
4.1.2 Setting parameters in the standard setting mode D-3
4.2 Functions useful in searching for a parameter or changing a parameter setting D-4

5. Basic parameters E-1
5.1 History function E-1
5.2 Setting acceleration/deceleration time E-2
5.2.1 Automatic acceleration/deceleration E-2
5.2.2 Manually setting acceleration/deceleration time E-3
5.3 Increasing starting torque E-3
5.4 Setting parameters by operating method E-5
5.5 Selection of operation mode E-6
5.6 Selecting control mode E-11
5.7 Manual torque boost–increasing torque boost at low speeds E-16
5.8 Base frequency E-16
5.9 Maximum frequency E-17
5.10 Upper limit and lower limit frequencies E-17
5.11 Setting frequency command characteristics E-18
5.12 Preset speed operation (speeds in 15 steps)） E-18
5.13 Selecting forward and reverse runs (operation panel only) E-21
5.14 Setting the electronic thermal E-22
5.15 Changing the display unit % to A (ampere)/V (volt) E-26
5.16 Meter setting and adjustment E-27

5.17 PWM carrier frequency E-31
5.18 Trip-less intensification E-32
5.18.1 Auto-restart (Restart during coasting) E-32
5.18.2 Regenerative power ride-through control/Deceleration stop during power failure/ Synchronized acceleration/deceleration E-33
5.19 Dynamic (regenerative) braking - For abrupt motor stop E-36
5.20 Standard default setting E-42
5.21 Searching for all reset parameters and changing their settings E-44
5.22 EASY key function E-45

6. Extended parameters F-1
6.1 Input/output parameters F-1
6.1.1 Low-speed signal F-1
6.1.2 Putting out signals of arbitrary frequencies F-2
6.2 Input signal selection F-3
6.2.1 Priority when forward/reverse run commands are entered simultaneously F-3
6.2.2 Assigning priority to the terminal board in the operation panel and operation mode F-4
6.2.3 Analog input signal switching F-5
6.3 Terminal function selection F-6
6.3.1 Keeping an input terminal function always active (ON) F-6
6.3.2 Modifying input terminal functions F-6
6.3.3 Using the servo lock function F-8
6.3.4 Modifying output terminal functions F-8
6.3.5 Response time of input/output terminals F-9
6.4 Basic parameters 2 ..... F-9
6.4.1 Switching among V/f characteristics 1, 2, 3 and 4 from input terminal F-9
6.5 V/f 5-point setting F-11
6.6 Speed command switching F-11
6.6.1 Using two types of frequency (speed) commands F-11
6.7 Operation frequency F-13
6.7.1 Start frequency/Stop frequency F-13
6.7.2 Run/Stop control with frequency setting signals F-13
6.7.3 Frequency setting signal 0Hz dead zone handling function F-14
6.8 DC braking F-14
6.8.1 DC braking F-14
6.8.2 Motor shaft fixing control F-16
6.8.3 Function of issuing a 0Hz command during a halt F-17
6.9 Auto-stop in case of lower-limit frequency continuous operation (Sleep/Wake-up function) F-18
6.10 Jog run mode F-19
6.11 Setting frequency via external contact input (Up/Down frequency setting) F-20
6.12 Jump frequency - jumping resonant frequencies F-22
6.13 Preset speed operation frequencies F-23
6.13.1 Preset speed operation frequency 8 to 15 ..... F-23
6.13.2 Forced oeration control F-23
6.14 Trip-less intensification F-24
6.14.1 Retry function F-24
6.14.2 Avoiding overvoltage tripping F-25
6.14.3 Output voltage adjustment/Supply voltage correction F-25
6.14.4 Reverse run prohibition F-27
6.14.5 Output voltage waveform selection F-27
6.15 Drooping control F-27
6.16 Light-load high-speed operation function F-29
6.17 Braking function F-29
6.18 Acceleration/deceleration suspend function F-31
6.19 Commercial power/inverter switching F-32
6.20 PID control F-34
6.21 Stop position control function F-38
6.22 Setting motor constants F-38

6.23 Increasing the motor output torque further in low speed range F-42
6.24 Torque control F-43
6.24.1 Torque command F-43
6.24.2 Speed limits in torque control mode F-43
6.24.3 Torque bias and load sharing gain F-44
6.25 Torque limit F-45
6.25.1 Torque limit switching F-45
6.25.2 Torque limit mode selection at acceleration/deceleration F-47
6.26 Stall prevention function F-49
6.26.1 Power running stall continuous trip detection time F-49
6.26.2 Regenerative braking stall prevention mode selection F-49
6.26.3 Stall prevention control switching F-49
6.27 Current and speed control adjustment F-50
6.27.1 Current and speed control gain F-50
6.27.2 Prevention of motor current oscillation at light load F-50
6.27.3 Max output voltage modulation rate F-50
6.28 Fine adjustment of frequency setting signal F-51
6.29 Operating a synchronous motor F-51
6.30 Acceleration/deceleration 2 F-52
6.30.1 Setting acceleration/deceleration patterns and switching acceleration/deceleration patterns 1, 2, 3 and 4 F-52
6.31 Pattern operation F-55
6.32 Preset speed mode F-57
6.33 Protection functions F-58
6.33.1 Setting of stall prevention level F-58
6.33.2 Inverter trip record retention F-58
6.33.3 Emergency stop F-59
6.33.4 Output phase failure detection F-60
6.33.5 OL reduction starting frequency F-61
6.33.6 Motor 150%-overload time limit F-61
6.33.7 Input phase failure detections F-61
6.33.8 Control mode for low current F-61
6.33.9 Detection of output short circuit F-62
6.33.10 Overtorque trip F-62
6.33.11 Cooling fan control selection F-63
6.33.12 Cumulative operation time alarm setting F-64
6.33.13 Abnormal speed detection F-64
6.33.14 Overvoltage limit operation F-65
6.33.15 Undervoltage trip F-65
6.33.16 Regenerative power ride-through control level F-65
6.33.17 Braking answer waiting time F-65
6.33.18 VI/II analog input wire breakage detection level F-66
6.33.19 Guide to time of replacement F-66
6.33.20 Rush current suppression relay activation time F-66
6.33.21 Motor thermal protection F-67
6.33.22 Braking resistance overload curve F-67
6.33.23 Selection of a restart condition for the motor stopped with a mechanical brake F-67
6.33.24 Protection against a failure of the control power backup device (optional CPS002Z) F-68
6.34 Override F-69
6.35 Adjustment parameters F-71
6.35.1 Pulse train output for meters F-71
6.35.2 Setting of optional meter outputs F-72
6.35.3 Calibration of analog outputs F-72
6.36 Operation panel parameter F-73
6.36.1 Prohibition of key operations and parameter settings F-73
6.36.2 Displaying the rotational speed of the motor or the line speed F-74
6.36.3 Changing the steps in which the value displayed changes F-75
6.36.4 Changing the standard monitor display F-76

6.36.5 Canceling the operation command F-76
6.36.6 Selection of operation panel stop pattern F-76
6.36.7 Setting of a torque command in panel operation mode F-76
6.36.8 Torque-related parameters for panel operation F-77
6.37 Tracing functions F-77
6.38 Integrating wattmeter F-80
6.39 Communication function F-81
6.39.1 2-wire RS485/4-wire RS485 ..... F-81
6.39.2 Open network option F-88
6.40 My function F-88
6.41 Traverse function F-88
6.42 Instruction manuals for optionally available devices and special functions F-89

7. Operation with external signal G-1
7.1 External operation G-1
7.2 Applied operation with input and output signals (operation by terminal board) G-2
7.2.1 Functions of input terminals (in case of sink logic) G-2
7.2.2 Functions of output terminals (incase of sink logic) G-5
7.2.3 Setup of input terminal operation time G-9
7.2.4 Analog input filter G-9
7.3 Setup of external speed command (analog signal) G-10
7.3.1 Setup by analog input signals (RR/S4 terminal) G-11
7.3.2 Setup by analog input signals (VI/II terminal) G-12
7.3.3 Setup by analog input signals (RX terminal) G-13

8. Monitoring the operation status H-1
8.1 Screen composition in the status monitor mode H-1
8.2 Monitoring the status H-2
8.2.1 Status monitor under normal conditions H-2
8.2.2 Display of detailed information on a past trip H-5
8.3 Changing status monitor function H-6
8.4 Display of trip information H-9
8.4.1 Trip code display H-9
8.4.2 Monitor display at tripping H-11
8.5 Display of alarm, pre-alarm, etc. H-13

9. Taking measures to satisfy the CE/UL/CSA standards I-1
9.1 How to cope with the CE standard I-1
9.1.1 EMC directive I-1
9.1.2 Measures to satisfy the EMC directive I-2
9.1.3 Low-voltage directive I-7
9.1.4 Measures to be taken to satisfy the low-voltage directive I-7
9.2 Measures to be taken to satisfy the UL/CSA standards I-8
9.2.1 Caution in installing the inverter I-8
9.2.2 Caution in wiring and rated current I-8
9.2.3 Caution as to peripheral devices I-8
9.2.4 Caution as to the protection of motors from overload I-9

10. Selection of peripheral devices J-1
10.1 Selection of wiring materials and devices J-1
10.2 Installation of a magnetic contactor J-3
10.3 Installation of an overload relay J-3
10.4 Application and functions of options J-4
10.5 Optional internal devices J-8
10.6 Connection of a DC power supply and other electric units J-11
10.6.1 Connection of a single-phase 200V power supply J-11
10.6.2 When using the inverter along with a DC power supply J-11

11. Table of parameters K-1

12. Specifications L-1
12.1 Models and their standard specifications L-1
12.2 Outside dimensions and weight L-5

13. Before making a service call- Trip information and remedies M-1
13.1 Trip causes/warnings and remedies M-1
13.2 Method of resetting causes of trip M-7
13.3 If the motor does not run while no trip message is displayed. M-8
13.4 How to check other troubles M-9

14. Inspection and maintenance N-1
14.1 Regular inspection N-1
14.2 Periodical inspection N-2
14.3 Making a call for servicing N-4
14.4 Keeping the inverter in storage N-4

15. Warranty O-1

16. Disposal of the inverter P-1

1. Read first

1.1 Check the product

Before using the product you have purchased, check to make sure that it is exactly what you ordered.

Caution	
Mandatory	Use an inverter that conforms to the specifications of the power supply and three-phase induction motor being used. If the inverter being used does not conform to those specifications, not only will the three-phase induction motor not rotate correctly, but it may cause serious accidents through overheating and fire.

Type indication

VF-AS1 3PH-200/240V 3.7kW/5HP

Series name
Power supply
Motor capacity

Carton box

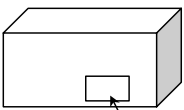

Type indication label

Instruction manual

This manual

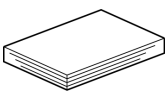

Inverter main unit

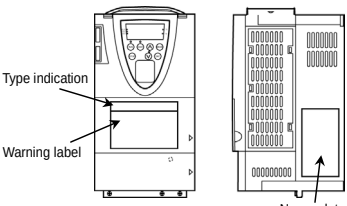

Warning label

Name plate

Inverter Type
Applicable motor
Invert rated output capacity
Power supply
Related input current
Related output current
Serial No.

1. 2 Contents of the product code

Explanation of the type and form written on the label.

Type — Form — Special specification code

V F A S 1 — 2 0 3 7 P L Y — W N — A 2 2

Model name	Voltage class	Applicable motor capacity		Operation panel	Additional functions I	Additional functions II	Special specification code
TOSVERT VF-AS1 series	2:200V~240V 4:380V~480V	004:0.4kW 007:0.75kW 015:1.5kW 022:2.2kW 037:3.7/4.0kW 055:5.5kW 075:7.5kW 110:11kW 150:15kW 185:18.5kW 220:22kW 300:30kW 370:37kW	450:45kW 550:55kW 750:75kW 900:90kW 110K:110kW 132K:132kW 160K:160kW 200K:200kW 220K:220kW 280K:280kW 355K:355kW 400K:400kW 500K:500kW	P:Provided	L: Built-in EMC filter + basic filter M: Built-in basic filter C: Built-in EMC filter	F:External heat sink Y:Others (non-standard)	A□□:Special specification code (□□is a number)

Default interface logic*

WN: Negative
WP: Positive
HN (*2): US Negative

*1): This code represents the factory default logic setting. You can switch from one input/output logic to the other using slide switch SW1. ⇒ For more details, refer to Section 2.3.2.
*2): WN and WP only above 280kW.
Warning : Always shut power off first then check the ratings label of inverter held in a cabinet.

1. 3 Structure of the main body

1.3.1 Names and functions

1) Outside view

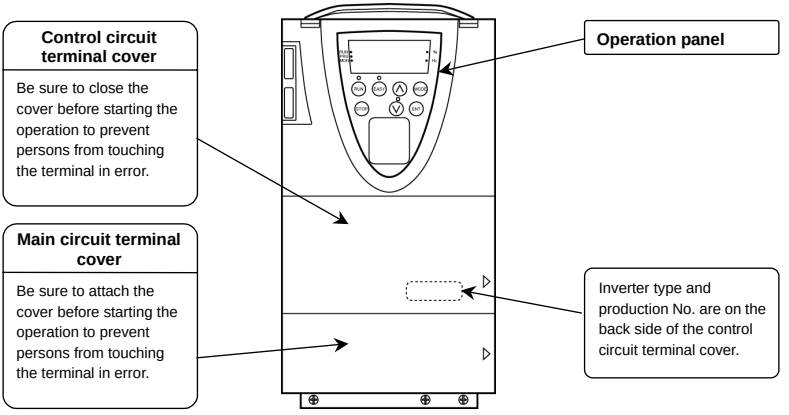

[Front panel]

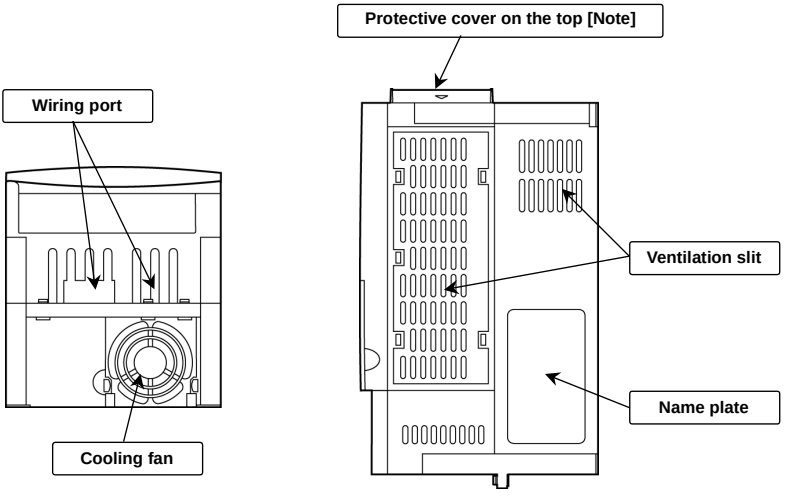

[Bottom view] [Side view]

Note: Remove this cover when installing the inverter side by side with other inverters where the ambient temperature will rise above 40°C. ⇒ For more details, refer to Section 1.4.4.

■ Operation panel

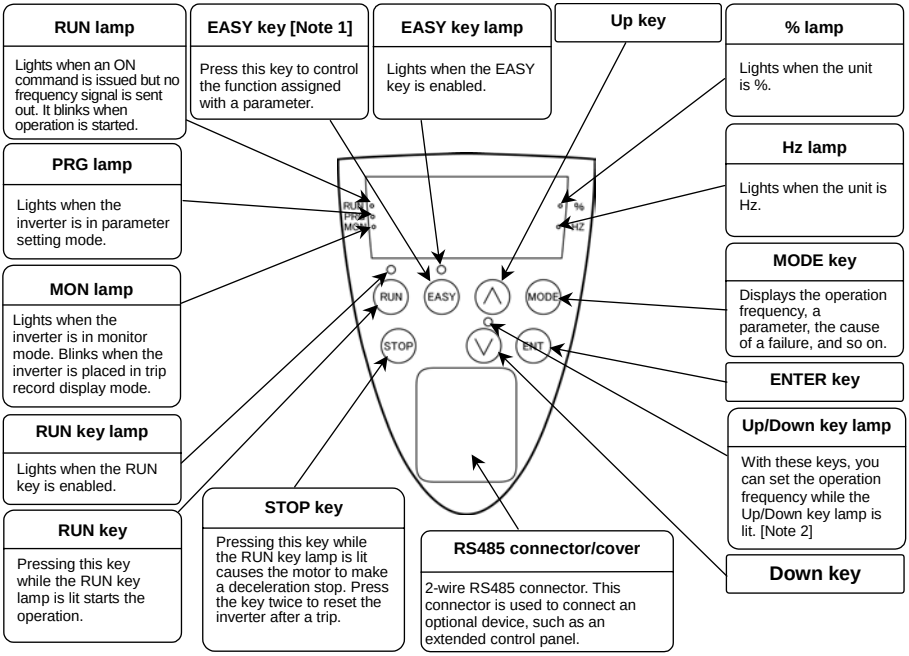

Note 1: ⇒ For details EASY Key functions, refer to Section 5.22.

Note 2: When parameter F730 is set to 1, the operation frequency cannot be set even if this lamp is lit.

1

2) Main circuit terminal

VFAS1-2004PL~2015PL
VFAS1-4007PL~4022PL

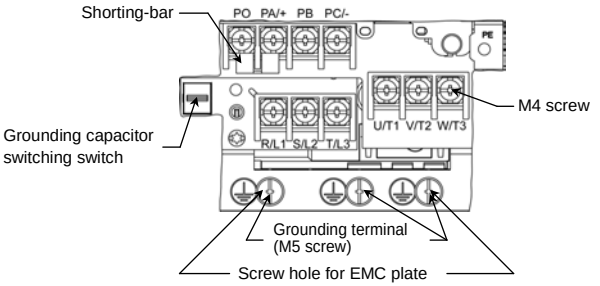

VFAS1-2022PL, 2037PL
VFAS1-4037PL

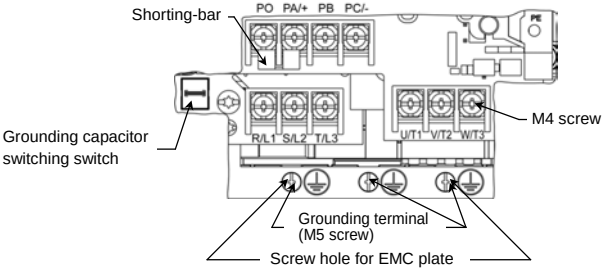

VFAS1-2055PL
VFAS1-4055PL, 4075PL

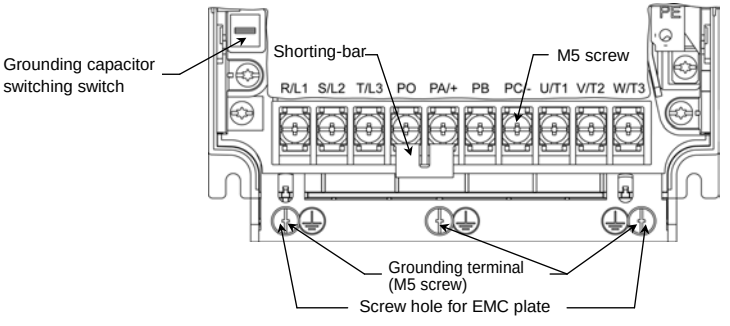

VFAS1-2075PL
VFAS1-4110PL

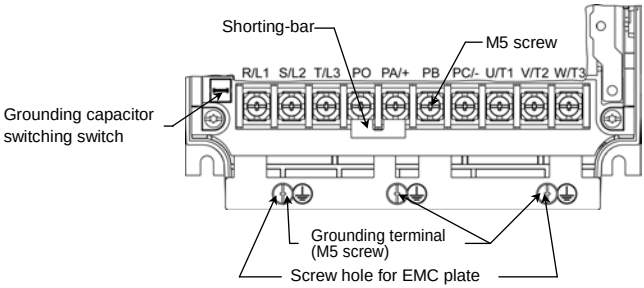

VFAS1-2110PM, 2150PM
VFAS1-4150PL, 4185PL

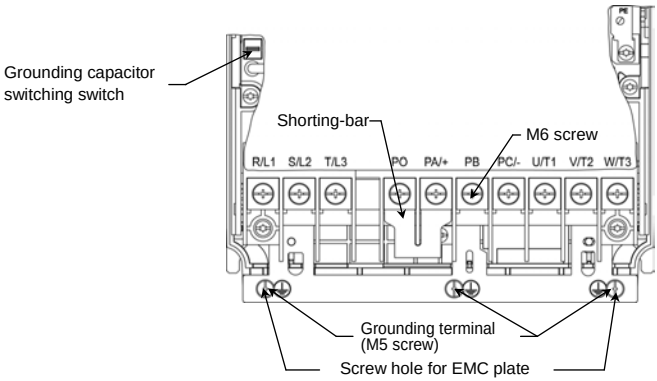

VFAS1-2185PM, 2220PM
VFAS1-4220PL

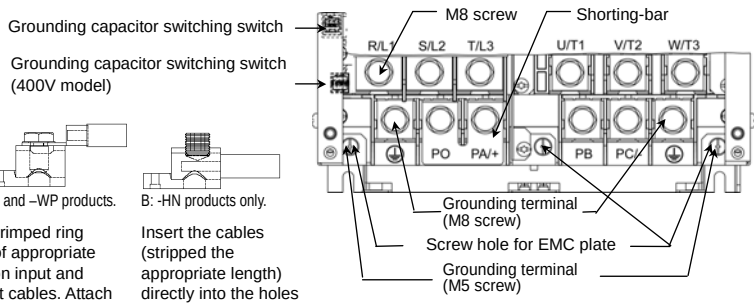

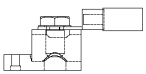

A: -WN and –WP products.

Use crimped ring lugs of appropriate size on input and output cables. Attach to the top side of the terminal block only. **Do not place wires in the hole of the terminal block.**

B: -HN products only.

Insert the cables (stripped the appropriate length) directly into the holes in the front of the power terminal block. **Tighten to recommended torque using the socket head cap screw provided in the terminal block.**

1

VFAS1-4300PL, 4370PL

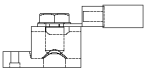

A: -WN and –WP products.

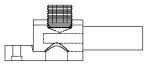

B: -HN products only.

Use crimped ring lugs of appropriate size on input and output cables. Attach to the top side of the terminal block only. **Do not place wires in the hole of the terminal block.**

Insert the cables (stripped the appropriate length) directly into the holes in the front of the power terminal block. **Tighten to recommended torque using the socket head cap screw provided in the**

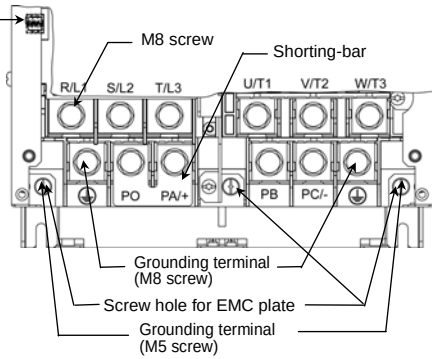

VFAS1-2300PM~2450PM
VFAS1-4450PL~4750PL

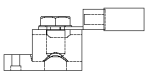

A: -WN and –WP products.

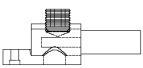

B: -HN products only.

Use crimped ring lugs of appropriate size on input and output cables. Attach to the top side of the terminal block only. **Do not place wires in the hole of the terminal block.**

Insert the cables (stripped the appropriate length) directly into the holes in the front of the power terminal block. **Tighten to recommended torque using the socket head cap screw provided in the terminal block.**

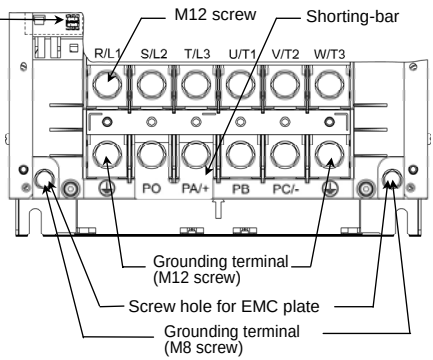

VFAS1-2550P
VFAS1-4900PC

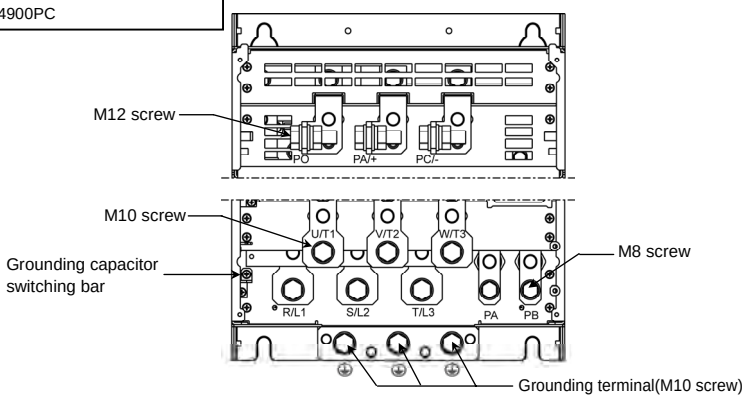

VFAS1-2750P
VFAS1-4110KPC

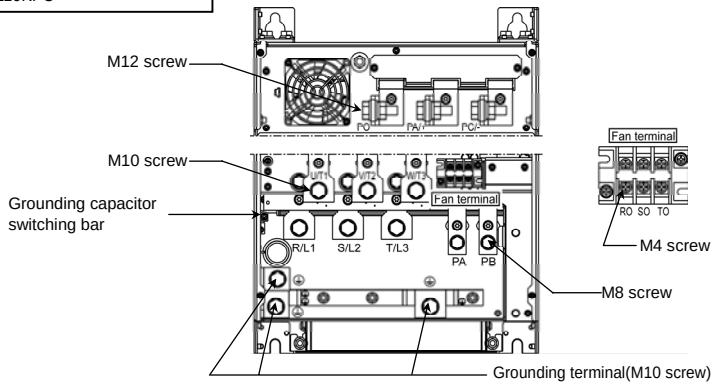

VFAS1-4132KPC

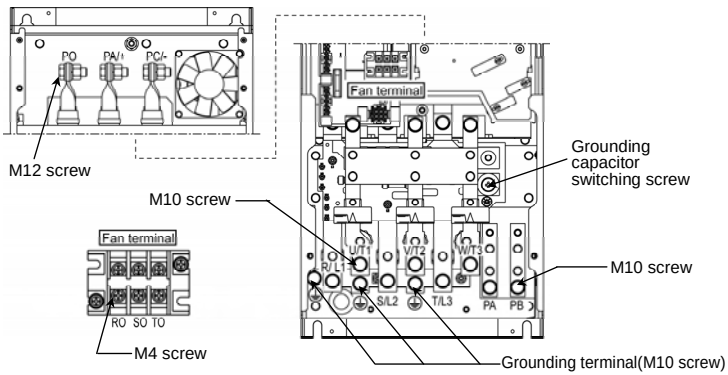

VFAS1-4160KPC

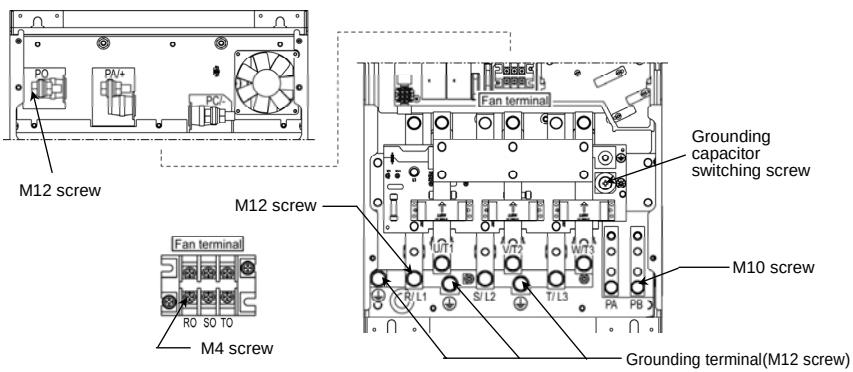

VFAS1-4200KPC~4280KPC

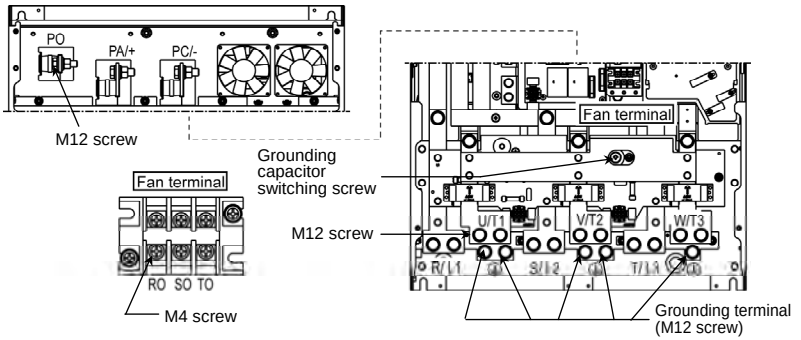

VFAS1-4355KPC, 4400KPC

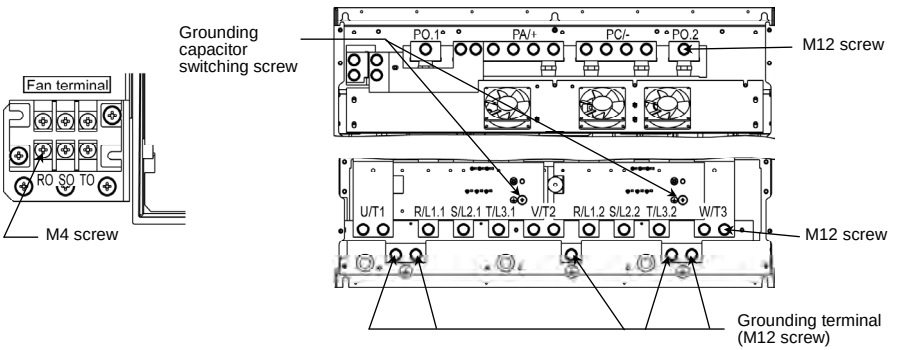

VFAS1-4500KPC

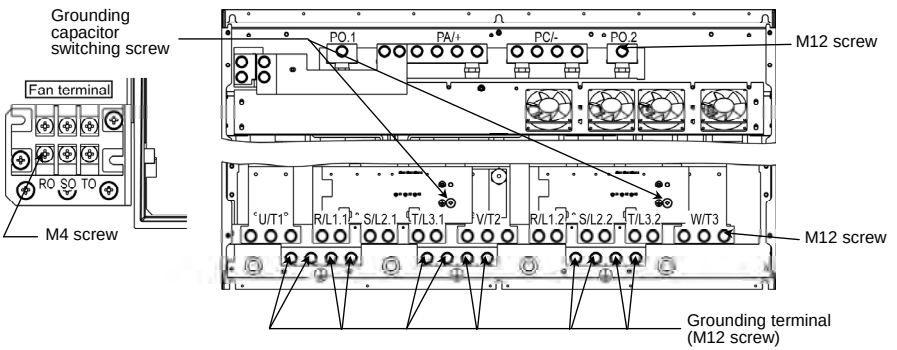

3) Control circuit terminal block

The control circuit terminal block is common to all equipment.

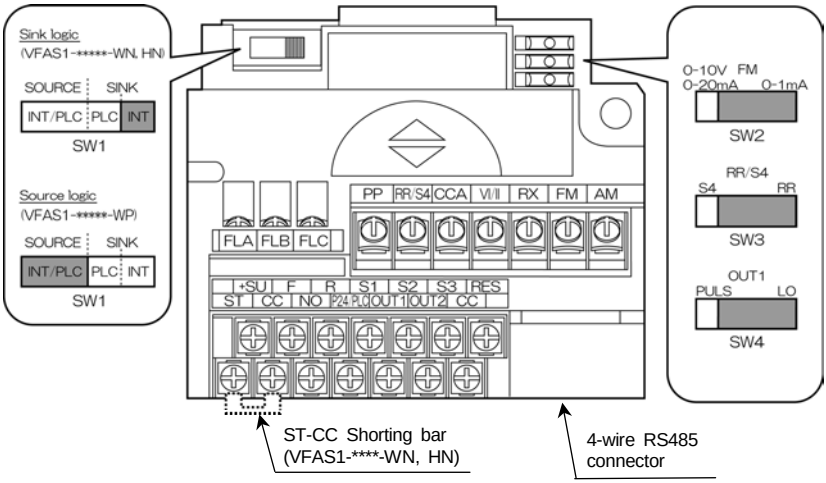

Control circuit terminal block screw size: M3

⇒ For details on all terminal functions, refer to Section 2.3.2.

1.3.2 Detaching the cover

■ Main circuit terminal cover

To wire the main circuit terminal for models 200V-15kW or smaller and 400V-18.5kW or smaller, remove the main circuit terminal cover in line with the steps given below.

(A) (B)

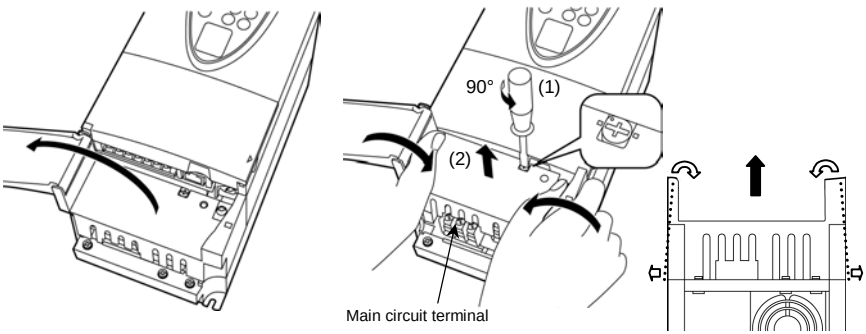

Open the main circuit terminal cover.
* To open the cover, lift it with your finger placed at the part ▷ on the right side of the cover.

Remove the main circuit terminal cover.
(1) Turn the screw securing the cover counterclockwise by 90° to release the lock (Do not turn the screw by more than 90°. Or else the screw might be broken.)
(2) Hold the cover by both ends, and then pull up the cover with slightly bending it inward.

For 200V/0.4kW to 200V/15kW models and 400V/0.75kW to 400V/18.5kW models, cut off the tabs (part A in the figure below) on the main circuit terminal cover if necessary for connecting the cables from the power supply.

200V-0.4kW~3.7/4.0kW
400V-0.75kW~3.7/4.0kW

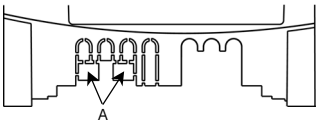

200V-5.5kW~15kW
400V-5.5kW~18.5kW

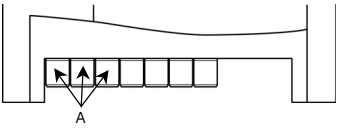

■ Front cover

To wire the main circuit terminal for models 200V-18.5kW or more and 400V-22kW or more, remove the front cover.

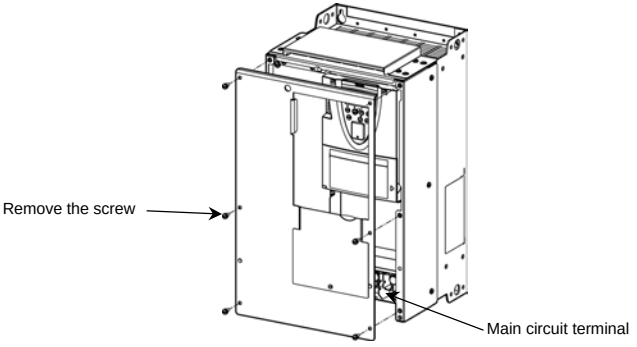

■ Control circuit terminal cover

To wire the control circuit terminal, open the control circuit terminal cover in line with the steps given below.

(A)

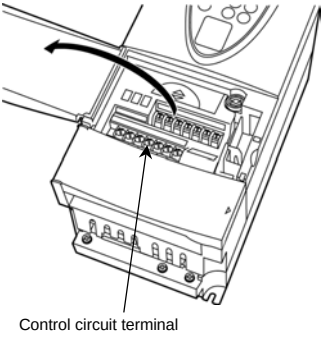

Open the control circuit terminal cover.
* To open the cover, lift it with your finger placed at the ▷ part on the right side of the cover.

(B)

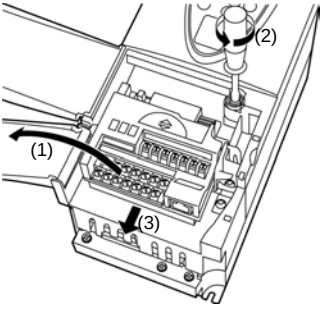

Remove the terminal, if necessary.
* To do so, open the main circuit terminal cover, loosen the screws that fix the terminal, using a (-) screwdriver or torx (T20H) screwdriver, placed your finger on part ⬍ and pull out the terminal.

■ Charge lamp

This lamp is lit when a high voltage remains in the inverter. When removing the main circuit terminal cover or opening the front cover, be sure to check that this lamp is off and follow the instructions about wiring on page 4.

The mounting position of the charge lamp varies from model to model.

VFAS1-2004PL~2150PM VFAS1-4007PL~4185PL

This lamp is placed behind the main circuit terminal cover.

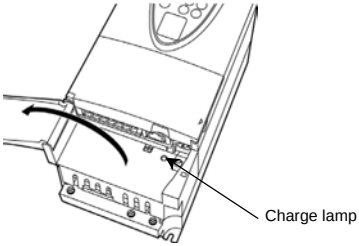

VFAS1-2185PM~2450PM VFAS1-4220PL~4750PL

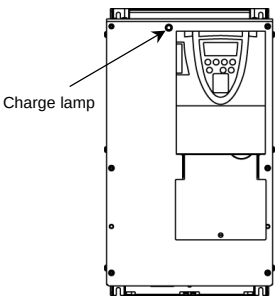

VFAS1-2550P, 2750P VFAS1-4900PC~4500KPC

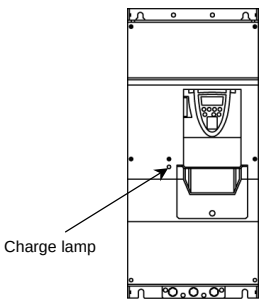

1.3.3 Grounding capacitor switching method

The inverter is grounded through a capacitor. The leakage current from the inverter can be reduced using the selector switch, switching bar or switching screw (depending on the model) on the main circuit terminal board. This switching device is used to detach the capacitor from the grounding circuit or to reduce its capacitance.
Some models have capacitors that can be detached completely, while others have capacitors whose capacitances can be reduced.
Note 1: Please note that, without the capacitor, the inverter does not comply with the EMC directive.
Note 2: When attaching or detaching the capacitor, be sure to turn off power.

■ 200V/45kW - 400V/75kW models and smaller: Grounding capacitor switching switch

⚠ Warning	
Prohibited	・When the grounding capacitor is detached from the inverter with a capacity of 400V-3.7/4.0kW or less, be sure to set the carrier frequency (CF) at 4kHz or less. If the carrier frequency is set above 4kHz, internal parts of the inverter may overheat and become damaged. ・When the grounding capacitor is detached from the inverter and the cables connecting the inverter to the motor is 100 m or more in length with a capacity between 400V-5.5kW and 400V-18.5kW, be sure to set the carrier frequency (CF) at 4kHz or less. If the carrier frequency is set above 4kHz, internal parts of the inverter may overheat and become damaged.

200V	0.4kW～15kW
400V	0.75kW～18.5kW

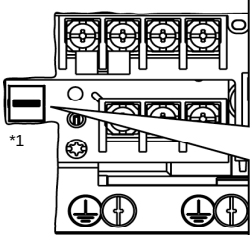

1: There are two places according to the model.
⇒ For details, refer to Section 1.3.1.

200V	18.5kW～45kW
400V	22kW～75kW

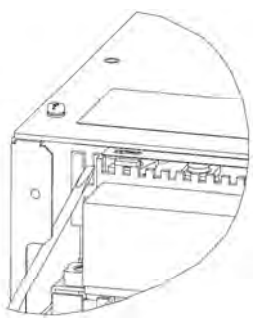

200V 0.4kW~7.5kW, 18.5kW, 22kW
400V 0.75kW~18.5kW

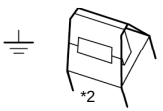

To connect and ground the capacitor, push in the button.
(Factory default position)

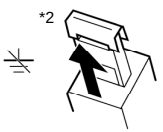

Pull up this part to detach the capacitor to prevent it from being

*2: For 400V-3.7/4.0kW model and smaller, the switch is fixed with a label saying "CF/SFr ≦ 4kHz." If such a label is affixed to your inverter, you should set the carrier frequency (CF) at 4kHz or less according to the instructions when switching.

200V 11kW, 15kW, 30kW~45kW
400V 22kW~75kW

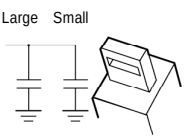

To change the capacitance from Small to Large, push in the button.
(Factory default position)

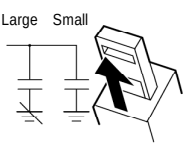

To change the capacitance from Large to Small, pull up the button.

200V 18.5～22kW 400V 22kW

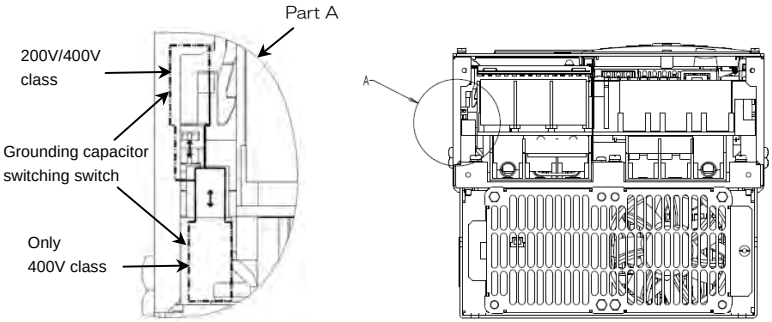

400V 30kW、37kW

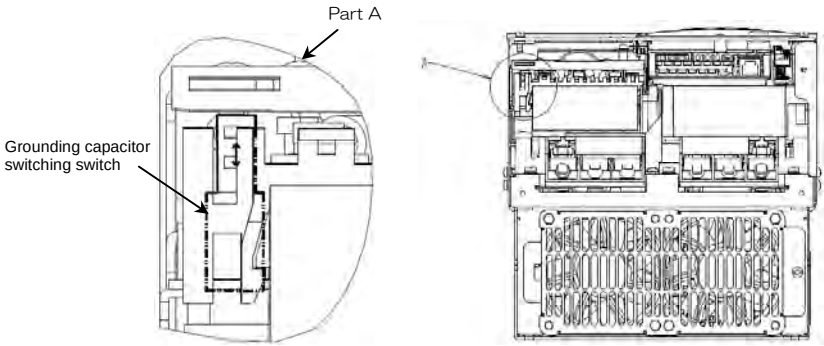

200V 30kW～45kW 400V 45kW～75kW

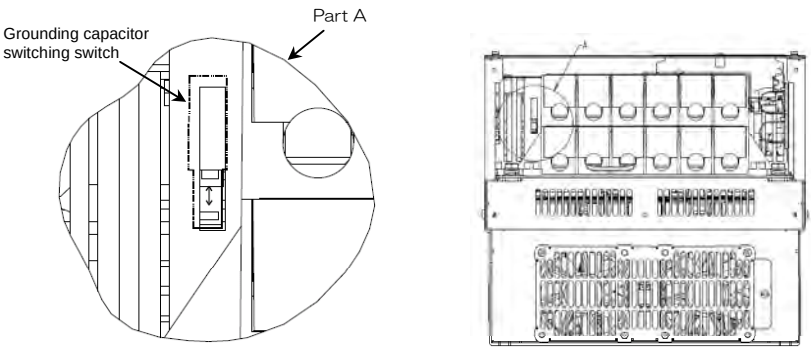

■ 200V/55kW models and larger 400V/90kW, 110kW models: Grounding capacitor switching bar

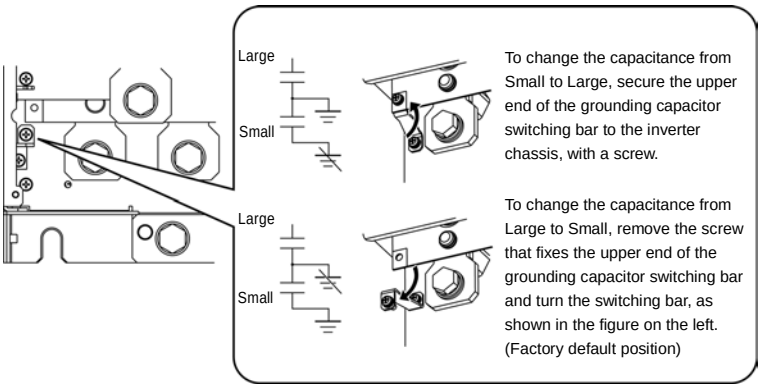

To change the capacitance from Small to Large, secure the upper end of the grounding capacitor switching bar to the inverter chassis, with a screw.

To change the capacitance from Large to Small, remove the screw that fixes the upper end of the grounding capacitor switching bar and turn the switching bar, as shown in the figure on the left. (Factory default position)

⚠ Warning	
Prohibited	In case of one phase grounding system (A three-phase supply power is connected in delta), do not change the connection of grounding capacitor before factory setting. If connection changed (this means the capacitance is increased), the capacitor may become damaged.

Note: If a neutral grounding system is used, 400V-90kW and 110kW models meet required EMC directive by changing the connection of the grounding capacitor as shown in the figure at the top (changing the capacitance from Small to Large).

■ 400V/132kW models and larger: Grounding capacitor switching screw
«132kW, 160kW»

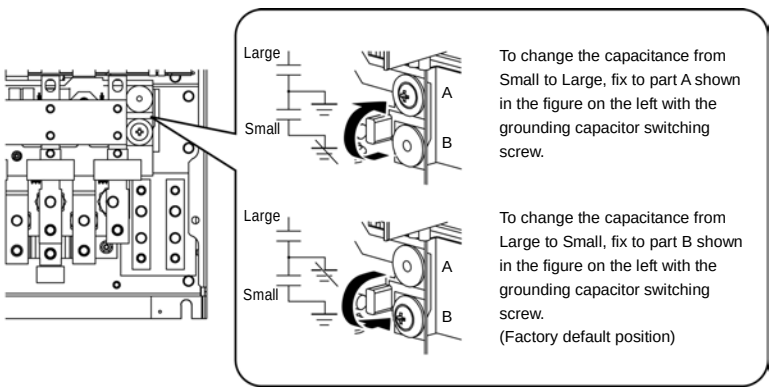

To change the capacitance from Small to Large, fix to part A shown in the figure on the left with the grounding capacitor switching screw.

To change the capacitance from Large to Small, fix to part B shown in the figure on the left with the grounding capacitor switching screw.
(Factory default position)

⚠ Warning	
Prohibited	In case of one phase grounding system (A three-phase supply power is connected in delta), do not change the connection of grounding capacitor before factory setting. If connection changed (this means the capacitance is increased), the capacitor may become damaged.

Note: If a neutral grounding system is used, changing the connection of the grounding capacitor as shown in the figure at the top (changing the capacitance from Small to Large) makes the inverter compliant with the EMC directive.

«200kW~280kW»

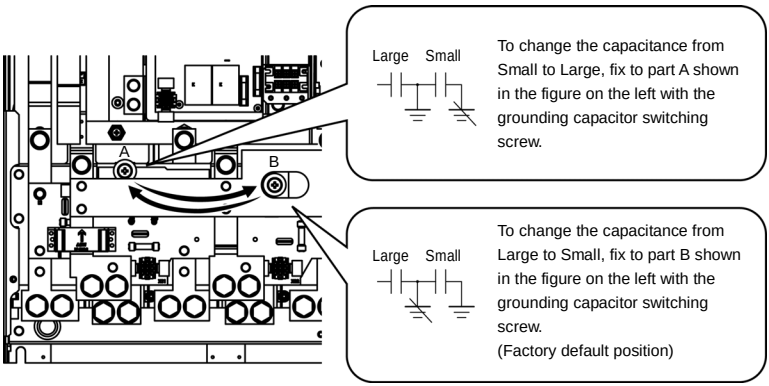

Warning	
Prohibited	In case of one phase grounding system (A three-phase supply power is connected in delta), do not change the connection of grounding capacitor before factory setting. If connection changed (this means the capacitance is increased), the capacitor may become damaged.

Note: If a neutral grounding system is used, changing the connection of the grounding capacitor as shown in the figure at the top (changing the capacitance from Small to Large) makes the inverter compliant with the EMC directive.

«355kW~500kW»

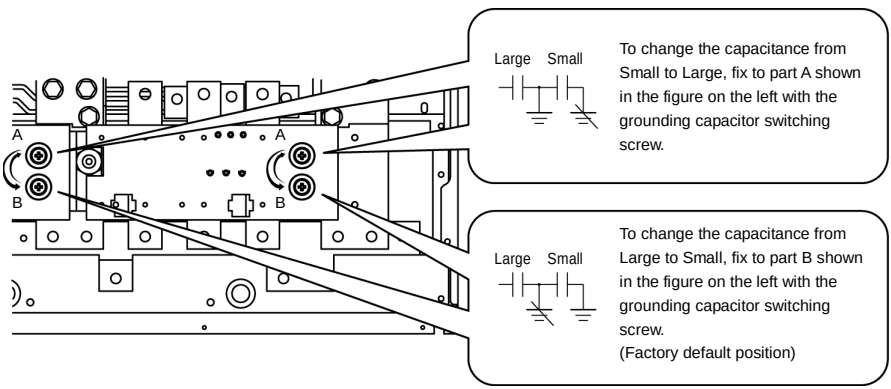

Warning	
Prohibited	In case of one phase grounding system (A three-phase supply power is connected in delta), do not change the connection of grounding capacitor before factory setting. If connection changed (this means the capacitance is increased), the capacitor may become damaged.

Note: If a neutral grounding system is used, changing the connection of the grounding capacitor as shown in the figure at the top (changing the capacitance from Small to Large) makes the inverter compliant with the EMC directive.

1.3.4 Installing the DC reactor

■ How to install (Example: VFAS1-4160KPC)

(1)

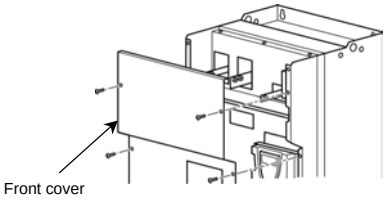

Remove the front cover.

(2)

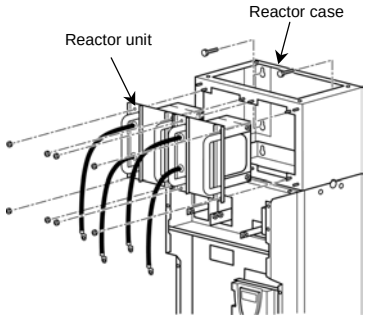

Mount the reactor case on an inner wall of the cabinet and secure the reactor unit to the case with screws.

(3)

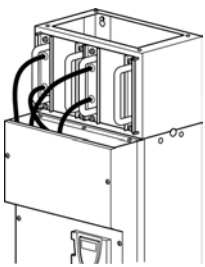

Connect the reactor unit to the PO and PA/+ terminals on the main-circuit terminal board. Then connect the supplied earth wire.
⇒ See the figures on the next page.
Fix the front cover after connecting.

(4)

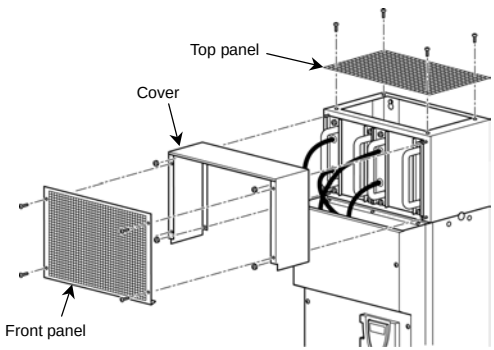

Secure the cover, front panel and top panel to the reactor case with screws.

■ Example of wiring of each model

«VFAS1-2550P, 2750P»

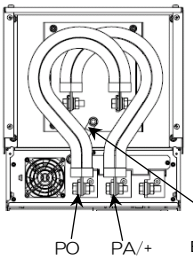

«VFAS1-4900PC~4132KPC»

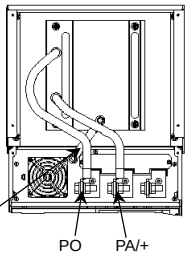

«VFAS1-4160KPC~4280KPC»

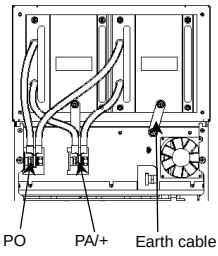

«VFAS1-4355KPC~4500KPC»

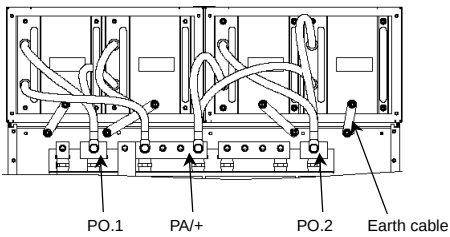

1.4 Notes on the application

1.4.1 Motors

Keep the following in mind when using the VF-AS1 to drive a motor.

⚠ Caution	
Mandatory	Use an inverter that conforms to the specifications of power supply and three-phase induction motor being used. If the inverter being used does not conform to those specifications, not only will the three-phase induction motor not rotate correctly, but it may cause serious accidents through overheating and fire.

Comparisons with commercial power operation

The VF-AS1 Inverter employs the sinusoidal PWM system to supply the motor. This is why compared to operation with a commercial power there will be a slight increase in motor temperature, noise and vibration. The main supply voltage and current will also be distorted due to harmonic distortion while increase the line current.

Operation in the low-speed area

When running continuously at low speed in conjunction with a general purpose motor, there may be a decline in that motor's cooling effect. If this happens, operate with the output decreased from rated load.
To carry out low-speed operation continuously at the rated torque, we recommend to use a inverter rated motor or a forced cooled motor designed for use with an inverter. When operating in conjunction with a inverter rated motor, you must change the inverter's motor overload protection level to VF motor use (OLM).

Adjusting the overload protection level

The VF-AS1 Inverter protects against overloads with its electronic thermal overload detection circuits. The electronic thermal's reference current of the inverter must be adjusted in line with the rated current of the motor being used in combination.

High-speed operation at and above 50Hz/60Hz (rated frequency)

Operating at frequencies greater than 50Hz/60Hz will increase noise and vibration. There is also a possibility that such operation will exceed the motor's mechanical strength under these conditions and the bearing limits. You should verify with the motor's manufacturer operating.

Method of lubricating load mechanisms

Operating an oil-lubricated reduction gear and gear motor in the low-speed areas will worsen the lubricating effect. Check with the manufacturer to find out about operable speed range.

Low loads and low inertia loads

The motor may demonstrate instability such as abnormal vibrations or overcurrent trips at light loads of 50% or under of the rated load, or when the load's moment of inertia is extremely small. If that happens reduce the carrier frequency.

Occurrence of instability

Unstable phenomena may occur under the load and motor combinations shown below.

• Combined with a motor that exceeds applicable motor ratings recommended for the inverter

• Combined with special motors

To deal with the above lower the settings of inverter carrier frequency. (When performing vector control, set the carrier frequency at 2kHz or more. If the carrier frequency is set below 2kHz, it will be automatically corrected to 2kHz by the inverter.)

• Combined with couplings between load devices and motors with high backlash

In this case, set the S-pattern acceleration/deceleration function and adjust the response time inertial moment setting during vector control or switch to V/f control (Pt=0).

• Combined with loads that have sharp fluctuations in rotation such as piston movements

In this case, adjust the response time inertial moment setting during vector control or switch to V/f control (Pt=0).

If it is operated in vector control mode (For torque control mode), only a motor whose capacity is same as inverter standard or 1 ranking lower should applied.

Braking a motor when power supply is lost

A motor with its power cut off goes into freewheel, and does not stop immediately. To stop the motor quickly as soon as the power is cut off install an auxiliary brake. There are different kinds of brake devices, both electrical and mechanical. Select the brake that is best for the system.

Loads that generate negative torque

When combined with loads that generate negative torque the protection for overvoltage and overcurrent on the inverter will go into operation and may cause a trip. For this kind of situation, you must install a dynamic braking resistor, etc. that complies with the load conditions.

Motor with brake

If a brake motor is used with the braking circuit connected to the output terminals of the inverter, the brake cannot be released because of a voltage drop at startup. Therefore, when using the inverter along with a brake motor, connect the braking circuit to the power supply side of the inverter, as shown in the figure below. In most cases, the use of a brake motor causes an increase in noise at low-speed.

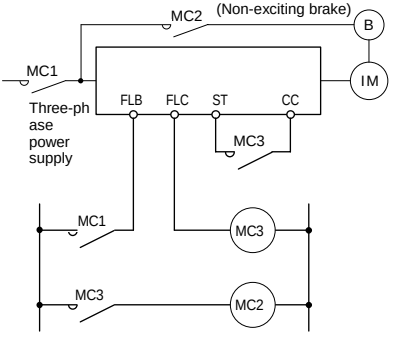

Circuit configuration 1

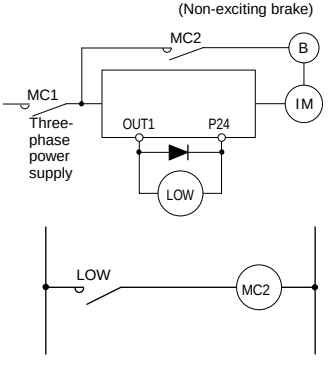

Circuit configuration 2

In circuit configuration 1, the brake is turned on and off through MC2 and MC3. If the circuit is configured in some other way, the overcurrent trip may be activated because of the locked rotor current when the brake goes into operation.
Circuit configuration 2 uses low-speed signal OUT1 to turn on and off the brake. Turning the brake on and off with a low-speed detection (OUT1 function) may be better in such applications as elevators. Please confer with your supplier before designing the system.

Measures to protect motors against surge voltages

In a system in which a 400V-class inverter is used to control the operation of a motor, very high surge voltages may be produced. When applied to the motor coils repeatedly for a long time this can cause deterioration of their insulation, depending on the wire length, wire routing and types of wires used. Here are some examples of measures against surge voltages.

(1) Lower the inverter's carrier frequency.
(2) Set the parameter F3 16 (Carrier frequency control mode selection) to 2 or 3.
(3) Use motors with a high dielectric strength.
(4) Insert an reactor or a surge voltage suppression filter between the inverter and the motor.

1.4.2 Inverters

Protecting inverters from overcurrent

The inverter has an overcurrent protection function. The programmed current level is set to the inverter's maximum applicable motor. If the motor used has a small capacity, the stall prevention level, overcurrent level and the motor electronic thermal protection must be readjusted. If adjustment is necessary, refer to Section 5.14, and make adjustments as directed.

Inverter capacity

Do not operate a large capacity motor with a small capacity (kVA) inverter even with light loads. Current ripple will raise the output peak current making it easier to set off the overcurrent trip.

Power factor correction capacitor

Power factor correction capacitors cannot be installed on the output side of the inverter. When a motor is run that has a power factor correction capacitor attached to it, remove the capacitors. This can cause inverter malfunction trips and capacitor destruction.

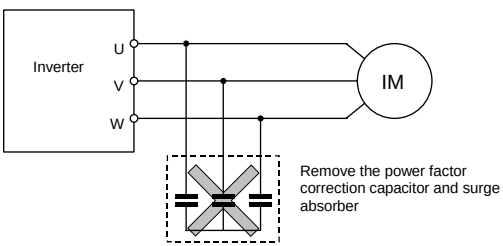

Power factor correction

Operating at other than rated voltage

Connections to voltages other than the rated voltage described in the rating label cannot be made. If a connection must be made to a power supply other than one with rated voltage, use a transformer to raise or lower the voltage to the rated voltage.

Circuit interrupting when two or more inverters are used on the same power line.

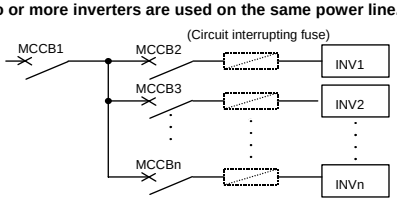

Breaking of selected inverter

There is no fuse in the inverter's main circuit. Thus, as the diagram above shows, when more than one inverter is used on the same power line, you must select interrupting characteristics so that only the MCCB2 will trip and the MCCB1 will not trip when a short occurs in the inverter (INV1). When you cannot select the proper characteristics install a circuit interrupting fuse between the MCCB2 and the INV1.

If power supply distortion is not negligible

If the power supply distortion is not negligible because the inverter shares a power distribution line with other systems causing distorted waveforms, such as systems with thyristers or large-capacity inverters, install an input reactor to improve the input power factor, to reduce higher harmonics, or to suppress external surges.

■ Disposal

If an inverter is no longer usable, dispose of it as industrial waste.

1.4.3 What to do about the leak current

⚠ Caution

Current may leak through the inverter's input/output wires because of insufficient electrostatic capacity on the motor with bad effects on peripheral equipment. The leakage current's value is affected by the carrier frequency and the length of the input/output wires. Test and adopt the following remedies against leakage current.

(1) Effects of leakage current across ground

Leakage current may flow not just through the inverter system but also through ground wires to other systems. Leakage current will cause earth leakage current breakers, leakage current relays, ground relays, fire alarms and sensors to operate improperly, and it will cause superimposed noise on the CRT screen or display of incorrect current values during current detection with the CT.

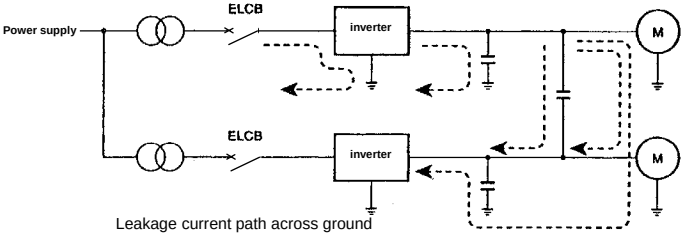

Leakage current path across ground

Remedies: There is the following method for reduce leakage current across ground.

1. Reduce PWM carrier frequency.
   The setting of PWM carrier frequency is done with the parameter CF.
2. If there is no radio-frequency interference or similar problem, detach the built-in noise filter capacitor.
   ⇒ Refer to Section 1.3.3. (For inverters of certain capacities, the PWM carrier frequency (CF) must be set at 4 kHz or below.)
3. Use high frequency remedial products for earth leakage breakers.
   If you use equipment like this, there is no need to reduce the PWM carrier frequency.
4. If the sensors and CRT are affected, it can be remedied by reducing the PWM carrier frequency described in 1 above, but if this cannot be remedied because of the increase in the motor's electric magnetic noise, please consult with your supplier.

* Cautions for applying models with a built-in noise filter.

For the models with a built-in noise filter, the leakage current value at power supply of Δ (delta) connecting wire (single-phase earth) can be larger than normal inverter, so be careful.

<Standard leakage current value (single-phase earth)>

VFAS1-2004PL~2150PM: Approx. 15mA

VFAS1-2185PM~2450PM: Approx. 1mA

(2) Affects of leakage current across supply lines

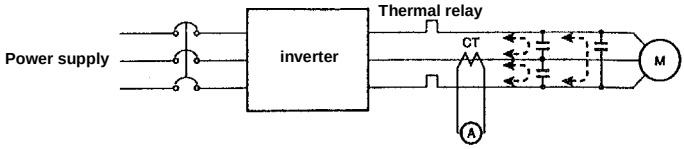

Leakage current path across wires

(1) Thermal relays

The high frequency component of current leaking into electrostatic capacity between inverter output wires will increase the effective current values and make externally connected thermal relays operate improperly. If the motor cables are more than 50m long, external thermal relay may operate improperly with models having motors of low rated current, especially the 400V class low capacity (3.7/4.0kW or less) models, because the leakage current will be high in proportion to the motor rating.

Remedies:

1. Use the electronic thermal overload built into the inverter.
   The setting of the electronic thermal overload is done using parameter OLM or tHr.
2. Reduce the inverter's PWM carrier frequency. However, that will increase the motor's acoustic noise.
   The setting of PWM carrier frequency is done with the parameter CF.
3. This can be improved by installing 0.1μ~0.5μF-1000Vdc film capacitor to the input/output terminals of each phase in the thermal overload relay.

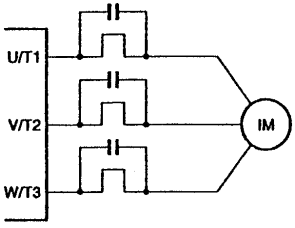

Thermal overload relays

(2) CT and ammeter

If a CT and ammeter are connected externally to measure inverter output current, the leakage current's high frequency component may destroy the ammeter or CT. If the motor cables are more than 50m long, it will be easy for the high frequency component to pass through the externally connected CT and be superimposed on and burn the ammeter with models having motors of low rated current, especially the 400V class low capacity (3.7/4.0kW or less) models, because the leakage current will increase in proportion to the motor's rated current.

Remedies:

1. Use a meter output terminal in the inverter control circuit.
   The output current can be output on the meter output terminal (AM, FM). If the meter is connected, use an ammeter of 1mAdc full scale or a voltmeter of 7.5Vdc-1mA full scale.
   Inverter output terminal (FM) can be changed to 0-20mAdc (4-20mAdc) with F681.
2. Use the monitor functions built into the inverter.
   Use the monitor functions on the panel built into the inverter to check current values.

1.4.4 Installation

■ Installation environment

The VF-AS1 Inverter is an electronic control instrument. Take full consideration to installing it in the proper operating environment.

⚠ Warning	
Prohibited	• Do not place any inflammable substances near the VF-AS1 Inverter. If an accident occurs in which flames are emitted, this could lead to fire.
Mandatory	• Operate under the environmental conditions prescribed in the instruction manual. Operation under any other conditions may result in malfunction.

⚠ Caution	
Prohibited	• Do not install the VF-AS1 Inverter in any location subject to large amounts of vibration. This could cause the unit to fall, resulting in bodily injury.
Mandatory	• Check to make sure that the input power supply voltage is +10%, -15% of the rated supply voltage written on the rating label (±10% when the load is 100% in continuous operation). If the input power voltage is not +10%, -15% of the rated power voltage (±10% when the load is 100% in continuous operation) this may result in fire.

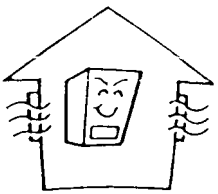

- Do not install in any location of high temperature, high humidity, moisture condensation and freezing.
- Avoid locations where there is exposure to water and/or where there may be large amounts of dust and metallic fragments.
- Do not install the inverter where there are gases that corrode metal or solvents that adversely affect plastic.

- Operate in areas where ambient temperature ranges from -10°C to 60°C. When installing the inverter where the ambient temperature will rise above 40°C, remove the protective cover from the top cover (depending on the capacity of the inverter used). When installing the inverter where the ambient temperature will rise above 50°C, it is necessary to operate in lower current than rated value.

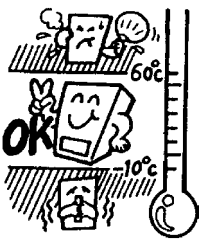

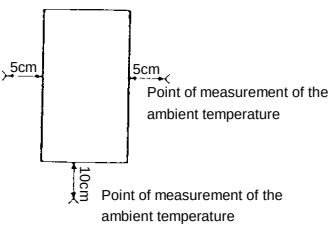

Note: The inverter is a heat-emitting body. Make sure to provide proper space and ventilation when installing in cabinet. When installing inside a cabinet, we recommend the removal of the protective cover.

• Do not install in any location that is subject to large amounts of vibration.

Note: If the VF-AS1 Inverter is installed in a location that is subject to vibration, anti-vibration measures are required.
Please consult with your supplier about these measures.

• If the VF-AS1 Inverter is installed near any of the equipment listed below, provide measures to insure against errors in operation.

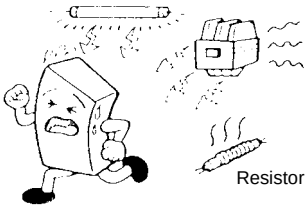

Solenoids: Attach surge suppressor on coil.
Brakes: Attach surge suppressor on coil.
Magnetic contactors: Attach surge suppressor on coil.
Fluorescent lamps: Attach surge suppressor on coil.
Resistors: Place far away from VF-AS1 Inverter.

• Do not touch the heat sink, because it becomes hot during operation.

■ How to install

⚠ Warning	
Prohibited	• Do not operate the inverter if it is damaged or any component is missing. This can result in electric shock or fire. Call your local sales agency for repairs.
Mandatory	• Must be installed in non-inflammables such as metals. The rear panel gets very hot. If installation is in an inflammable object, this can result in fire. • Do not operate with the front panel cover removed. This can result in electric shock. • An emergency stop device must be installed that fits with system specifications. (e.g. shut off input power then engage mechanical brake) Operation cannot be stopped immediately by the inverter alone, thus risking an accident or injury. • All options used must be those specified by Toshiba. The use of any other option may result in an accident.

⚠ Caution	
Mandatory	• The main unit must be installed on a base that can bear the unit's weight. If the unit is installed on a base that cannot withstand that weight, the unit may fall resulting in injury. • If braking is necessary (to hold motor shaft), install a mechanical brake. The brake on the inverter will not function as a mechanical hold, and if used for that purpose, injury may result.

Install the inverter in a well-ventilated indoor place and mount it on a flat metal plate in portrait orientation.
If you are installing more than one inverter, the separation between inverters should be at least 5cm, and they should be arranged in horizontal rows.
If the inverters are horizontally arranged with no space between them (side-by-side installation), remove of the protective cover on top of the inverter. (200V-55kW or lager and 400V-90kW or larger models dose not need to remove the protective cover)

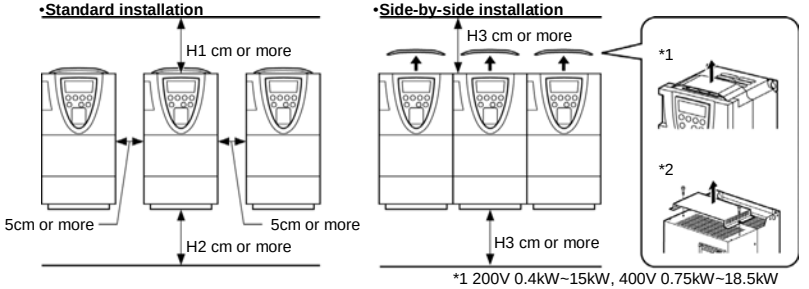

*1 200V 0.4kW~15kW, 400V 0.75kW~18.5kW
*2 200V 18.5kW~45kW, 400V 22kW~75kW

	H1(cm)	H2(cm)	H3(cm)
200V 75kW or smaller 400V 110kW or smaller	10	10 (Note1)	10 (Note1)
400V 132, 160kW	15	15 (Note1)	25 (Note1)
400V 200~280kW	20	15 (Note1)	25 (Note1)
400V 355, 400kW	30	25 (Note1)	25 (Note1)
400V 500kW	40	25 (Note1)	25 (Note1)

The space shown in the diagram is the minimum allowable clearance. Make the space on top and bottom as large as possible to allow for air passage.

Note1: For models designed for 200V-75kW and 400V-110kW motors or larger, leave a space of 30cm or more above and below the inverter.

Note2: Do not install in any location where there is high humidity or high temperatures and where there are large amounts of dust and metallic fragments. If you are going to install the equipment in any area that presents a potential problem, please consult with your supplier before doing so.

■ Current reduction curve

Depending on the way in which the inverter is installed, the ambient temperature and the carrier frequency setting, you may need to reduce the inverter's continuous output current.
Reduction rates vary depending on the capacity of the inverter. The capacities shown in these diagrams are capacities with the highest reduction rates. Refer to section 12, you can find 100 % value of output current there.
The VFAS1 has the function of adjusting the inverter's overload resistance automatically according to the ambient temperature, as shown in the figure below. This function enhances the inverter's overload resistance when the ambient temperature is low. To use this function, set the parameter F631 to 1.
If F631 is set to 0 (default setting), protection will be provided by reducing the output current (approximate linear reduction) in 12, "Specifications," by adjusting the PWM carrier frequency or at the occurrence of the event shown in the diagram below, which occurs first.

200V	0.4、1.5、7.5kW
400V	0.75、1.5kW

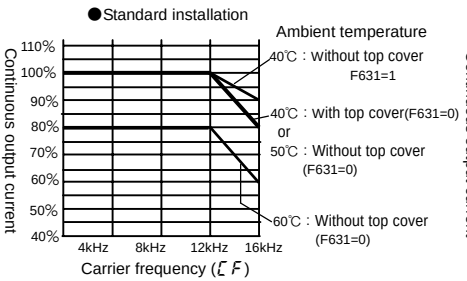

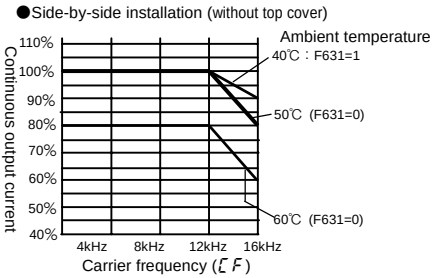

200V 0.75、2.2、3.7、15kW（See lines shown in --- for 15kW）
400V 7.5、15 kW（See lines shown in --- for 7.5kW and 15kW）

●Standard installation

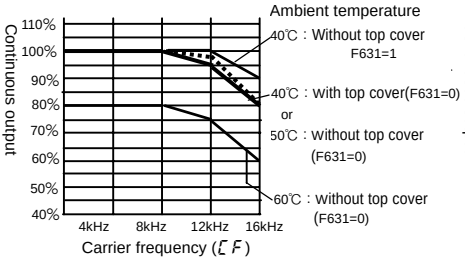

●Side-by-side installation (without top cover)

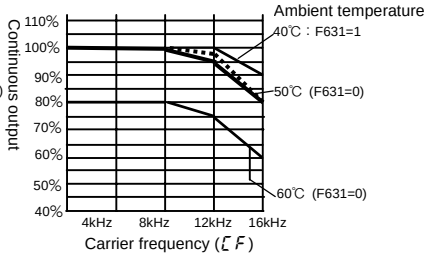

200V 5.5、11kW
400V 5.5、11、18.5kW

●Standard installation

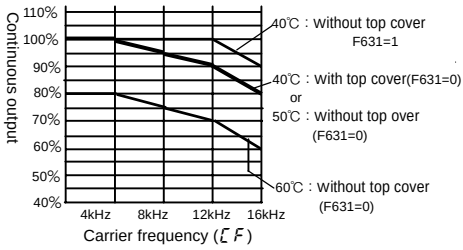

●Side-by-side installation (without top cover)

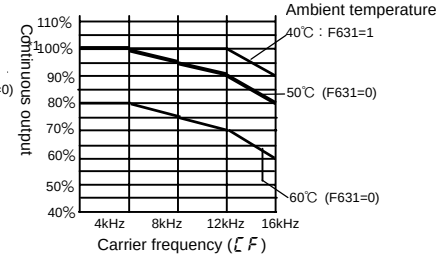

400V 2.2kW

●Standard installation

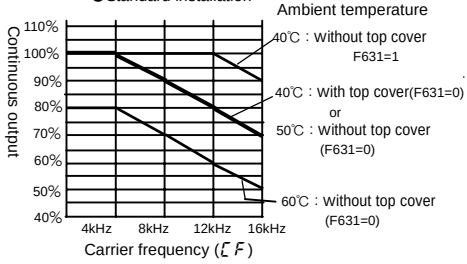

●Side-by-side installation (without top cover)

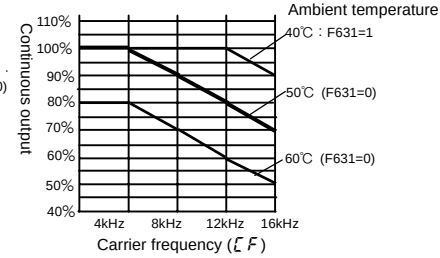

400V 3.7kW

●Standard installation

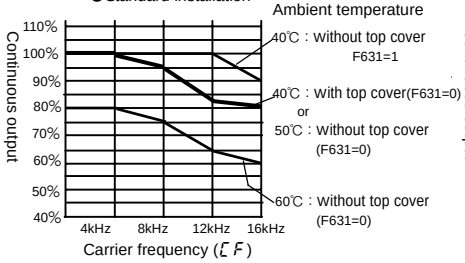

●Side-by-side installation (without top cover)

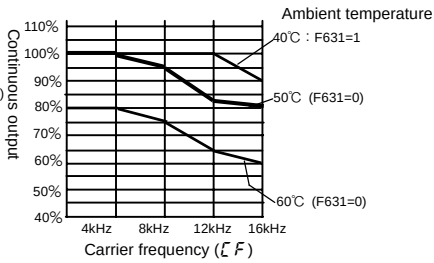

1

200V 18.5kW

●Standard installation

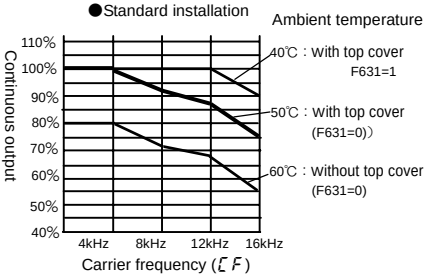

●Side-by-side installation (without top cover)

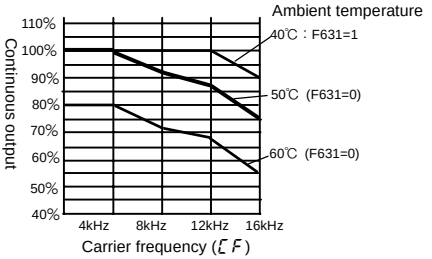

200V 22、37kW（See lines shown in --- for 15kW）

●Standard installation

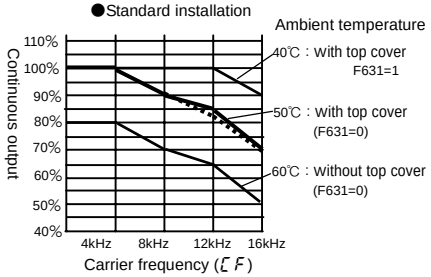

●Side-by-side installation (without top cover)

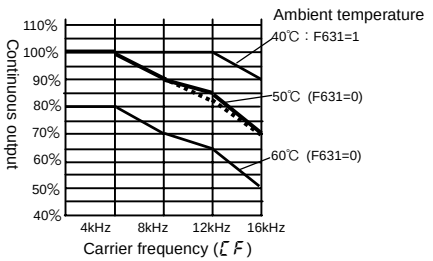

200V 30kW

●Standard installation

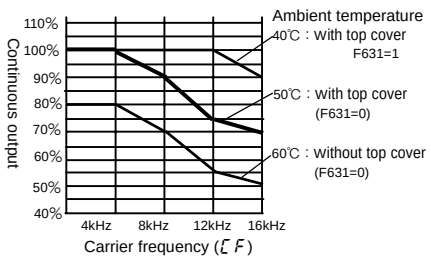

●Side-by-side installation (without top cover)

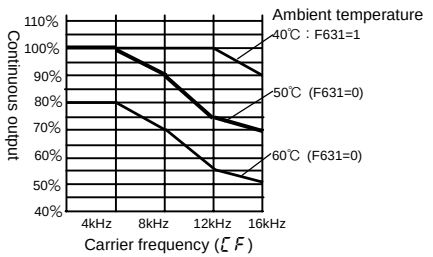

200V 45kW
400V 22、30、45、55kW

●Standard installation

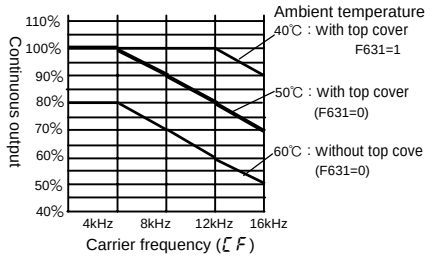

●Side-by-side installation (without top cover)

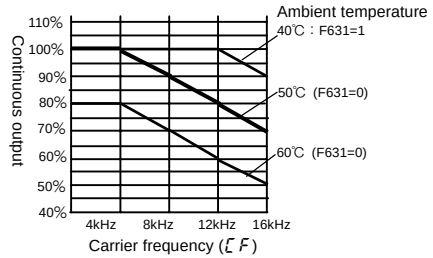

400V 37、75kW

●Standard installation

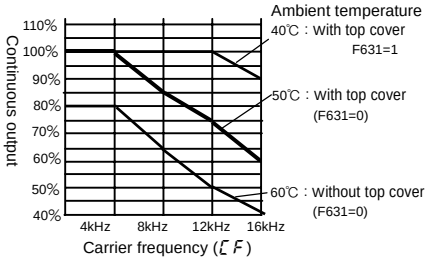

●Side-by-side installation (without top cover)

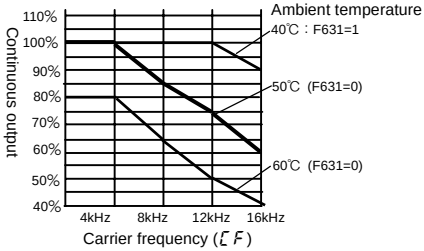

200V 55、75kW

●Standard installation / Side-by-side installation

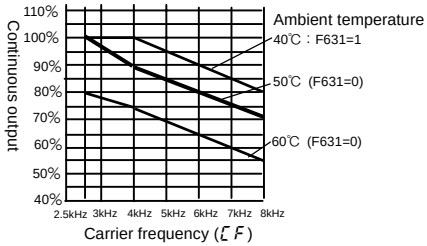

400V 90、110 kW

●Standard installation / Side-by-side installation

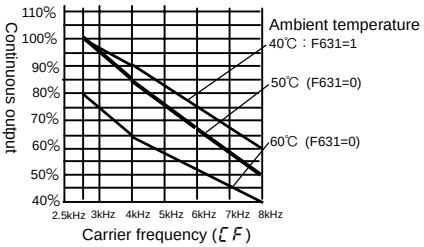

400V 132、200、280kW
（See lines shown in --- for 200kW）

●Standard installation / Side-by-side installation

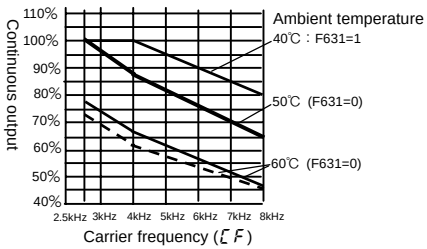

400V 160、220kW
（See lines shown in --- for 160kW）

●Standard installation / Side-by-side installation

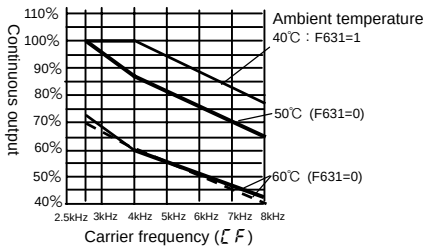

400V 355、400、500kW
（See lines shown in --- for 355kW）

●Standard installation / Side-by-side installation

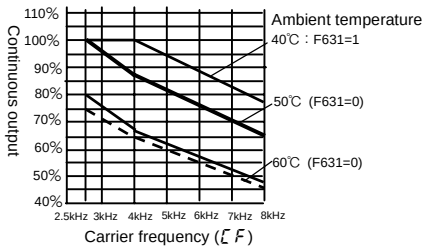

1

■ Calorific values of the inverter and the required ventilation

The energy loss when the inverter converts power from AC to DC and then back to AC is about 5%. In order to suppress the rise in temperature inside the cabinet when this loss becomes heat loss, the interior of the cabinet must be ventilated and cooled.

The amount of forced air-cooling ventilation required and the necessary heat exchange surface area when operating in a sealed cabinet according to motor capacity are as follows.

Voltage class	Applicable Motor (kW)	Calorific values (W)	Part of inside calorific values (W) (note3)	Amount of forced air cooling ventilation required (m^3/min)	Heat exchange surface area required for sealed storage cabinet (m^2)
200V	0.4	50	25	0.29	1.0
	0.75	70	28	0.40	1.4
	1.5	113	32	0.65	2.3
	2.2	135	39	0.78	2.7
	3.7/4.0	191	40	1.1	3.8
	5.5	307	60	1.8	6.2
	7.5	408	72	2.4	8.2
	11	593	83	3.4	11.9
	15	692	91	4.0	13.9
	18.5	800	120	4.6	16.0
	22	865	124	5.0	17.3
	30	1140	152	6.6	22.8
	37	1340	167	7.7	26.8
	45	1570	185	9.0	31.4
	55	1720	154	9.9	34.4
	75	2210	154	12.7	44.2
400V	0.75	57	28	0.33	1.2
	1.5	82	30	0.47	1.7
	2.2	112	33	0.64	2.3
	3.7/4.0	136	41	0.78	2.8
	5.5	262	58	1.5	5.3
	7.5	328	66	1.9	6.6
	11	448	77	2.6	9.0
	15	577	104	3.3	11.6
	18.5	682	106	3.9	13.7
	22	720	111	4.2	14.4
	30	980	134	5.6	19.6
	37	1180	138	6.8	23.6
	45	1360	165	7.8	27.2
	55	1560	179	9.0	31.2
	75	2330	226	13.4	46.6
	90	2410	237	13.8	48.2
	110	2730	261	15.6	54.6
	132	3200	296	18.3	64.0
	160	3820	350	21.9	76.4
	200	4930	493	28.2	98.6
	220	5405	586	30.9	108.1
	280	6830	658	39.1	136.6
	355	7960	-	45.5	159.2
	400	9300	-	53.2	186.0
	500	11400	-	65.2	228.0

Note1: The heat loss for the optional external devices (input reactor, DC reactor, radio noise reduction filters, etc.) is not included in the calorific values in the table. With the exception of inverters indented for motors with capacities of 355kW and more, in which case the calorific value of the DC reactor is included.

Note2: Each calorific value in the table refers to the quantity of heat that an inverter produces when it is operated continuously at the factory default CF (carrier frequency) under a load factor of 100%.

Note3: This value is power dissipated inside the enclosure with using heatsink outer option.

■ Panel designing taking into consideration the effects of noise

The inverter generates high frequency noise. When designing the control panel setup, consideration must be given to that noise. Examples of measures are given below.

- Wire so that the main circuit wires and the control circuit wires are separated. Do not place them in the same conduit, do not run them parallel, and do not bundle them.
- Provide shielding and twisted wire for control circuit wiring.
- Separate the input (power) and output (motor) wires of the main circuit. Do not place them in the same conduit, do not run them parallel, and do not bundle them.
- Ground the inverter ground terminals (⏚).
- Install surge suppressor on any magnetic contactor and relay coils used around the inverter.
- Install noise filters if necessary.

■ Installing more than one unit in a cabinet

If you are installing two or more inverters in one cabinet, pay attention to the following.

- Inverters may be installed side by side with each other with no space left between them.
- When installing inverters side by side, remove the protective cover on the top surface of each inverter.
  The output current may need to be reduced, depending on the ambient temperature and the carrier frequency, so see “How to install” in this section.
- Ensure a space of at least 20cm on the top and bottom of the inverters.
- Install an air deflecting plate so that the heat rising up from the inverter on the bottom does not affect the inverter on the top.

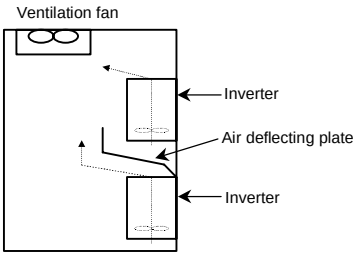

2. Connection equipment

⚠ Warning	
Disassembly prohibited	• Never disassemble, modify or repair. This can result in electric shock, fire and injury. For repairs, call your sales agency.
Prohibited	• Don't stick your fingers into openings such as cable wiring hole and cooling fan covers. This can result in electric shock or other injury. • Don't place or insert any kind of object into the inverter (electrical wire cuttings, rods, wires). This can result in electric shock or fire. • Do not allow water or any other fluid to come in contact with the inverter. That may result in electric shock or fire.

⚠ Caution	
Prohibited	• Do not transport the inverter with its front door detached. The covers may come off and the unit will drop out resulting in injury.
Mandatory	• Models (20kg or more in weight) designed for 200V-18.5kW or larger and 400V-22kW or larger should be carried by at least two persons. Carrying it alone could cause injury.

2.1 Cautions on wiring

⚠ Warning	
Prohibited	• Never remove the front cover when power is on or open door if enclosed in a cabinet. The unit contains many high voltage parts and contact with them will result in electric shock.
Mandatory	• Turn power on only after attaching the front cover or closing door if enclosed in a cabinet. If power is turned on without the front cover attached or closing door if enclosed in a cabinet. This can result in electric shock or other injury. • Electrical construction work must be done by a qualified expert. Connection of input power by someone who does not have that expert knowledge may result in fire or electric shock. • Connect output terminals (motor side) correctly. If the phase sequence is incorrect, the motor will operate in reverse and that may result in injury. • Wiring must be done after installation. If wiring is done prior to installation that may result in injury or electric shock. • The following steps must be performed before wiring. (1) Shut off all input power. (2) Wait at least 15 minutes and check to make sure that the charge lamp is no longer lit. (3) Use a tester that can measure DC voltage (800 VDC or more), and check to make sure that the voltage to the DC main circuits (between PA/+ and PC/-) is 45 V or less. If these steps are not properly performed, the wiring will cause electric shock. • Tighten the screws on the terminal board to specified torque. If the screws are not tightened to the specified torque, it may lead to fire.
Be Grounded	• Ground must be connected securely. If the ground is not securely connected, it could lead to electric shock or fire when a malfunction or current leak occurs.

⚠ Caution	
Prohibited	• Do not attach devices with built-in capacitors (such as noise filters or surge absorber) to the output (motor side) terminal. This could cause a fire.

■ Preventing radio noise

To prevent electrical interference such as radio noise, separately bundle wires to the main circuit's power terminals (R/L1, S/L2, T/L3) and wires to the motor terminals (U/T1, V/T2, W/T3).

■ Control and main power supply

The control power supply and the main circuit power supply for the VF-AS1 are the same. If a malfunction or trip causes the main circuit to be shut off, control power will also be shut off.
If you want to keep the control circuit alive when the main circuit shuts off due to trouble or tripping, you use an optional control power supply backup unit (CPS002Z).

■ Wiring

- Because the space between the main circuit terminals is small use sleeved pressure terminals for the connections. (stripped wires may be connected directly for 200V/18.5kW to 200V/45kW models and 400V/22kW to 400V/75kW models). Connect the terminals so that adjacent terminals do not touch each other.
- For ground terminal G/E use wires of the size that is equivalent to or larger than those given in table below and always ground the inverter.
  Use as large and short a ground wire as possible and wire it as close as possible to the inverter.

Voltage class	Applicable Motor	Grounding wire size (AWG) [Note]	Grounding wire size (mm^2) [Note]
200V	0.4~2.2 kW	14	2.5
	3.7, 4.0 kW	12	4
	5.5 kW	10	6
	7.5 kW	10	10
	11, 15 kW	10	16
	18.5, 22 kW	8	16
	30 kW	6	25
	37, 45 kW	6	35
	55 kW	2	70
	75 kW	2	95
400V	0.75~4.0 kW	14	2.5
	5.5 kW	12	2.5
	7.5 kW	12	4
	11 kW	10	6
	15~22 kW	10	10
	30 kW	10	16
	37, 45 kW	8	16
	55 kW	6	25
	75 kW	6	35
	90 kW	2	70
	110 kW	2	95
	132 kW	1/0	95
	160 kW	1/0	120
	200 kW	1/0	150
	220 kW	2/0	150
	280 kW	3/0	120×2
	355 kW	4/0	120×2
	400 kW	4/0	150×2
	500 kW	250MCM	150×2

Note1: The recommended cable size is that of the cable (e.g. 600V class, HIV cable) with continuous maximum permissible temperature of 75℃. Ambient temperature is 40℃ or less and the wiring distance is 30m or less.

- Refer to the table in Section 10.1 for wire sizes.
- The length of the main circuit wire in Section 10.1 should be no longer than 30m. If the wire is longer than 30m, the wire size (diameter) must be increased.
- Tighten the screws on the terminal board to specified torque.

Recommended tightening torque for screws on the terminal board		
	N·m	lb·ins
M3	0.6	5.3
M4	1.4	12.4
M5	3.0	26.6
M6	5.4	47.8
M8	12.0	106
M10	24.0	212
M12	41.0	360

2.2 Standard connections

⚠ Warning	
Prohibited	• Do not connect input power to the output (motor side) terminals (U/T1, V/T2, W/T3). Connecting input power to the output could destroy the inverter or cause a fire. • Do not connect a regenerative braking resistor to any DC terminal (between PA/+ and PC/-, or between PO and PC/-). If a braking resistor is connected by mistake, it may overheat extremely and cause a fire. Connect resistors as directed in the instructions for Section 5.19. • Within 15 minutes after turning off input power, do not touch wires of devices (MCCB) connected to the input side of the inverter. That could result in electric shock.
Be Grounded	• Ground must be connected securely. If the ground is not securely connected, it could lead to electric shock or fire when a malfunction or current leak occurs.

2

[Standard connection diagram – sink logic]

The figure below shows an example of typical wiring in the main circuit 200V 0.4-45kW/400V 0.75-75kW inverter.

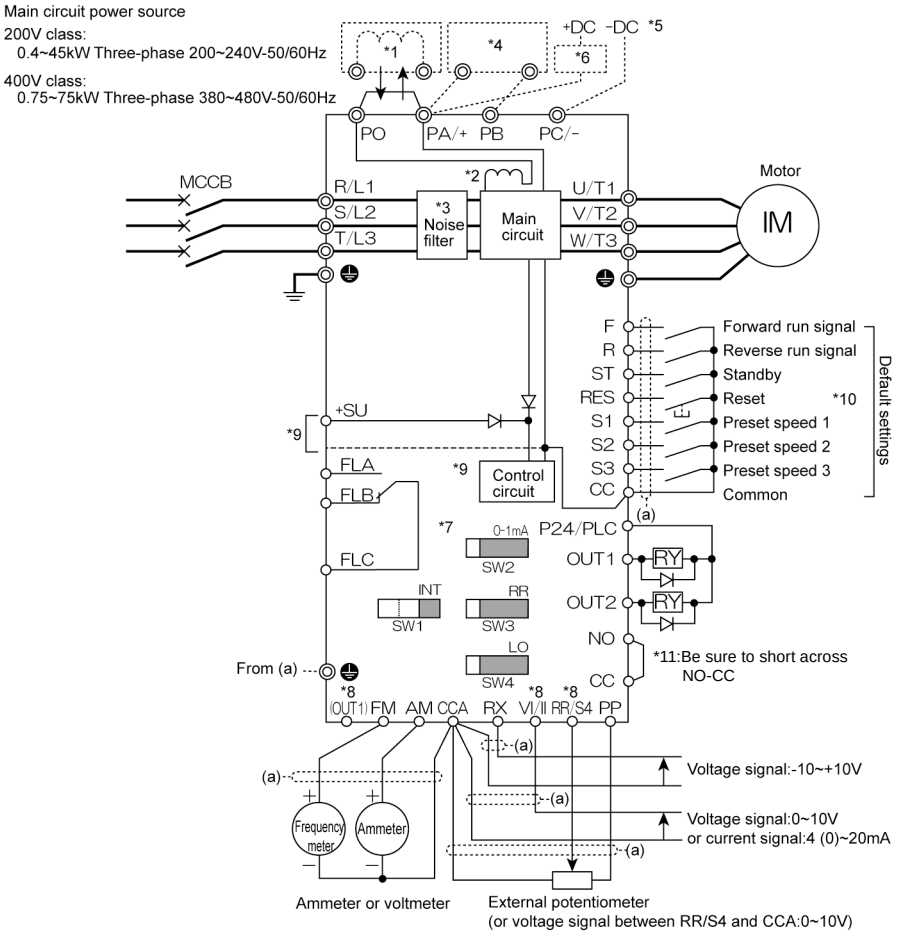

*1: The inverter is shipped with the terminals PO and PA/+ shorted with a bar (200V-45kW or smaller, 400V-75kW or smaller). Remove this shorting bar when installing a DC reactor (DCL).
*2: The DC reactor is built in for models 200V-11kW~45kW and 400V-18.5kW~75kW.
*3: The noise filter is built in for models 200V-45kW or smaller and all of 400V.
*4: External braking resistor (option). Dynamic braking drive circuit built-in (GTR7) as standard for models 160kW or smaller.
*5: To supply a DC power, connect the cables to the PA/+ and PC/- terminals.
*6: If you want to use a DC power supply to operate the inverter (200V: 18.5kW or more, 400V: 22kW or more), be sure to contact your supplier customer support center, because an inrush current limiting circuit is required in such a case.
*7: ⇒ Refer to Section 2.3.2 for chip switch functions.
*8: The functions assigned to terminals OUT1, VI/II and RR/S4 can be switched by changing parameter settings.
⇒ For details refer to Section 2.3.2.
*9: To supply control power from an external power supply for backing up the control power supplied from the inverter, an optional control power backup device (CPS002Z) is required. In such a case, the backup device is used at the same time with the internal power supply of the inverter.
The optional control power backup unit can be used with both 200V and 400V models.
To back up control power, set the parameter F647 (Control power supply backup option failure monitoring) properly.
⇒ For more information, refer to 6.33.24.
*10: When RES-CC is shorted and then opened, the inverter protective status is canceled.

[Standard connection diagram - sink logic]

The figure below shows an example of typical wiring in the main circuit 200V 55, 75kW/400V 90-280kW inverter.

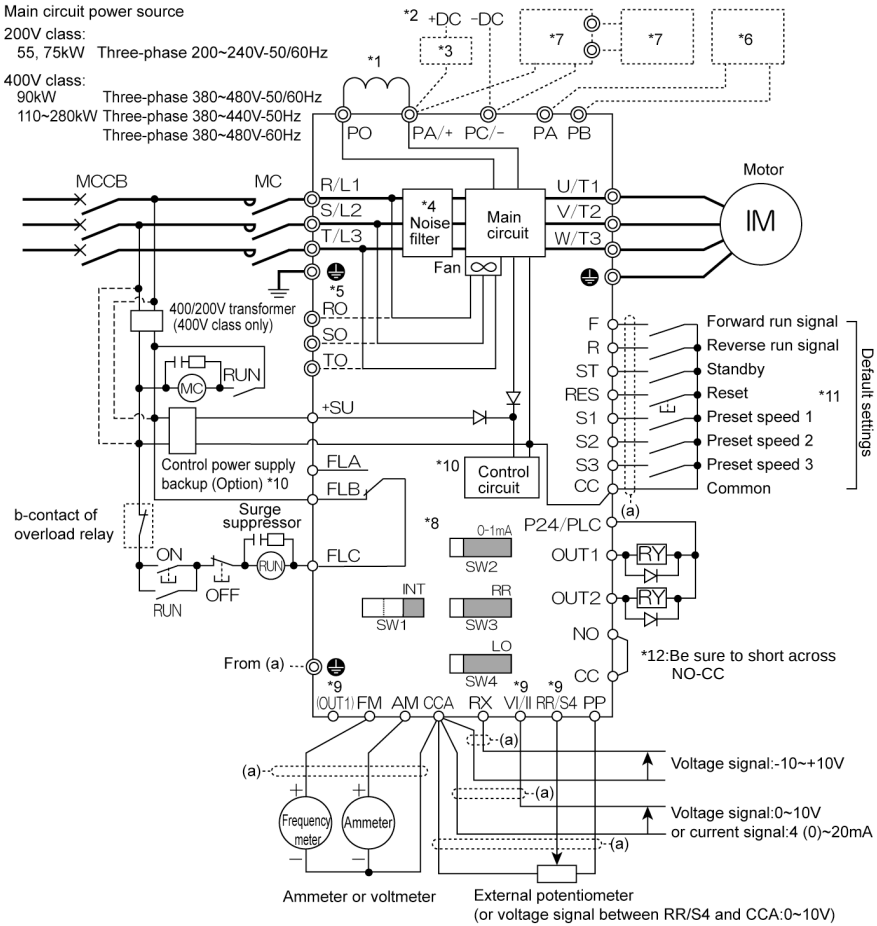

*1: Be sure to connect the DC reactor.
*2: To supply a DC power, connect the cables to the PA/+ and PC/- terminals.
*3: If you want to use a DC power supply to operate the inverter, be sure to contact your supplier customer support center, because an inrush current limiting circuit is required in such a case.
*4: The noise filter is built in for models all of 400V.
*5: For models 200V-75kW and 400V-110kW or larger, three-phase power input is necessary to drive the fan if you want to use a DC power supply.
*6: Every 200V model of any capacity and every 400V model with a capacity of 160kW or less come with dynamic braking unit drive circuits (GTR7) built into them as standard equipment, so if your inverter is among these models, connect an external braking resistor (optional) alone.
*7: If you are using a 400V/200kW model or larger, use a braking unit (optional) and an external braking resistor (optional) in combination.
*8: ⇒ Refer to Section 2.3.2 for switch functions.
*9: The functions assigned to terminals OUT1, VI/II and RR/S4 can be switched by changing parameter settings.
⇒ For details refer to Section 2.3.2.
*10: To supply control power from an external power supply for backing up the control power supplied from the inverter, an optional control power backup device (CPS002Z) is required. In such a case, the backup device is used at the same time with the internal power supply of the inverter.
The optional control power backup unit can be used with both 200V and 400V models.
To back up control power, set the parameter F647 (Control power supply backup option failure monitoring) properly.
⇒ For more information, refer to 6.33.24.
*11: When RES-CC is shorted and then opened, the inverter protective status is canceled.

2

[Standard connection diagram - sink logic]

The figure below shows an example of typical wiring in the main circuit 400V 355-500kW inverter.

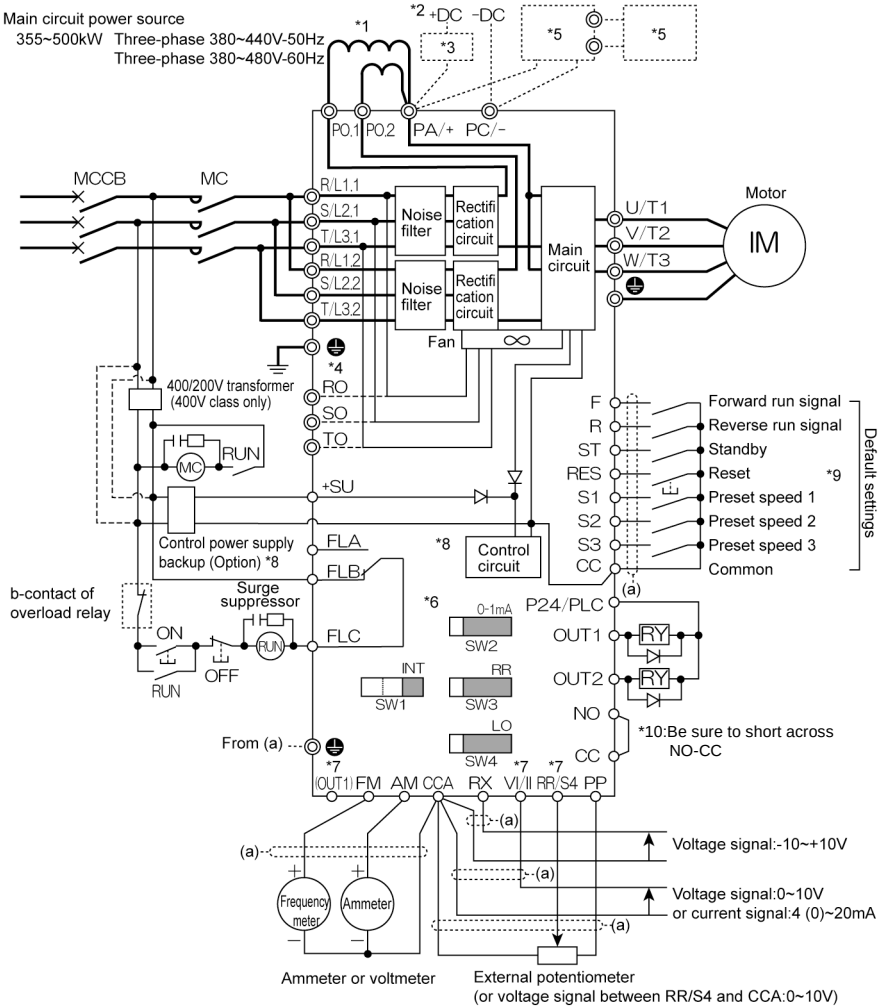

*1: Be sure to connect the DC reactor.
*2: To supply a DC power, connect the cables to the PA/+ and PC/- terminals.
*3: If you want to use a DC power supply to operate the inverter, be sure to contact your supplier customer support center, because an inrush current limiting circuit is required in such a case.
*4: Three-phase power input is necessary to drive the fan if you want to use a DC power supply.
*5: Use a braking unit (optional) and an external braking resistor (optional) in combination.
*6: ⇒ Refer to Section 2.3.2 for switch functions.
*7: The functions assigned to terminals OUT1, VI/II and RR/S4 can be switched by changing parameter settings.
⇒ For details refer to Section 2.3.2.
*8: To supply control power from an external power supply for backing up the control power supplied from the inverter, an optional control power backup device (CPS002Z) is required. In such a case, the backup device is used at the same time with the internal power supply of the inverter.
To back up control power, set the parameter F647 (Control power supply backup option failure monitoring) properly.
⇒ For more information, refer to 6.33.24.
*9: When RES-CC is shorted and then opened, the inverter protective status is canceled.

[Standard connection diagram - source logic]

The figure below shows an example of typical wiring in the main circuit 200V 0.4-45kW/400V 0.75-75kW inverter.

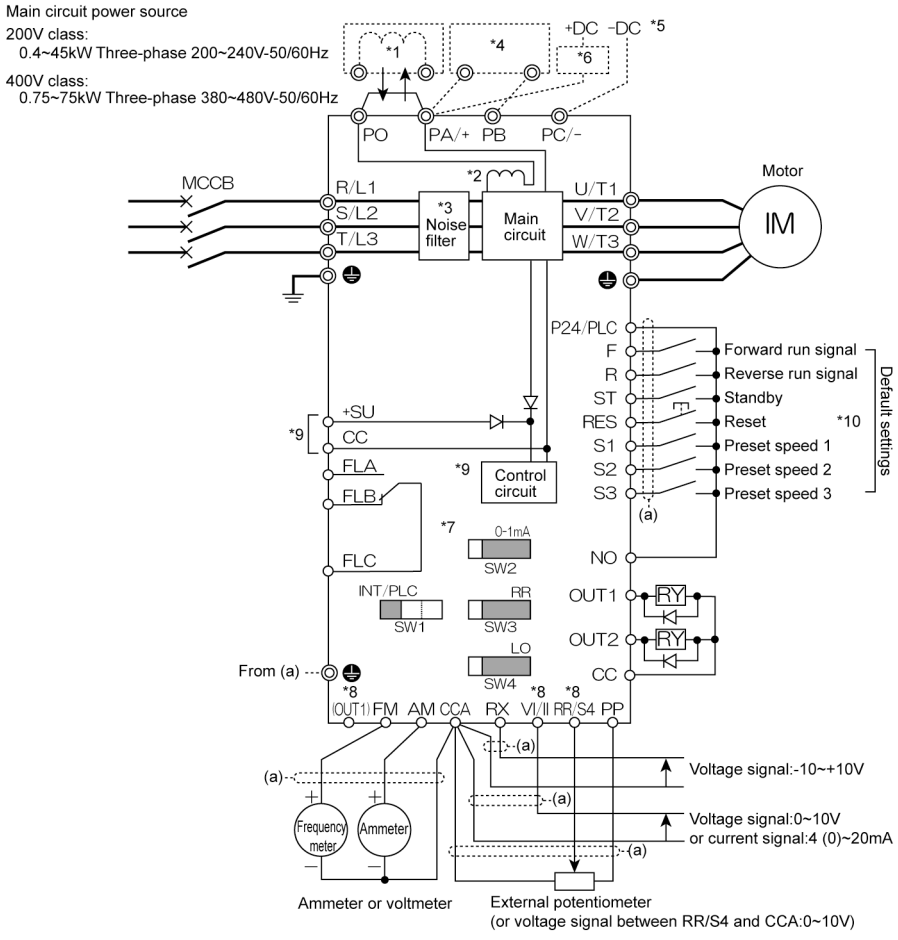

*1: The inverter is shipped with the terminals PO and PA/+ shorted with a bar (200V-45kW or smaller, 400V-75kW or smaller). Remove this shorting bar when installing a DC reactor (DCL).
*2: The DC reactor is built in for models 200V-11kW~45kW and 400V-18.5kW~75kW.
*3: The noise filter is built in for models 200V-45kW or smaller and all of 400V.
*4: External braking resistor (option). Dynamic braking drive circuit built-in (GTR7) as standard for models 160kW or smaller.
*5: To supply a DC power, connect the cables to the PA/+ and PC/- terminals.
*6: If you want to use a DC power supply to operate the inverter (200V: 18.5kW or more, 400V: 22kW or more), be sure to contact your supplier customer support center, because an inrush current limiting circuit is required in such a case.
*7: ⇒ Refer to Section 2.3.2 for chip switch functions.
*8: The functions assigned to terminals OUT1, VI/II and RR/S4 can be switched by changing parameter settings.
⇒ For details refer to Section 2.3.2.
*9: To supply control power from an external power supply for backing up the control power supplied from the inverter, an optional control power backup device (CPS002Z) is required. In such a case, the backup device is used at the same time with the internal power supply of the inverter.
The optional control power backup unit can be used with both 200V and 400V models.
To back up control power, set the parameter F647 (Control power supply backup option failure monitoring) properly.
⇒ For more information, refer to 6.33.24.
*10: When RES-CC is shorted and then opened, the inverter protective status is canceled.

2

[Standard connection diagram - source logic]

The figure below shows an example of typical wiring in the main circuit 200V 55, 75kW/400V 90-280kW inverter.

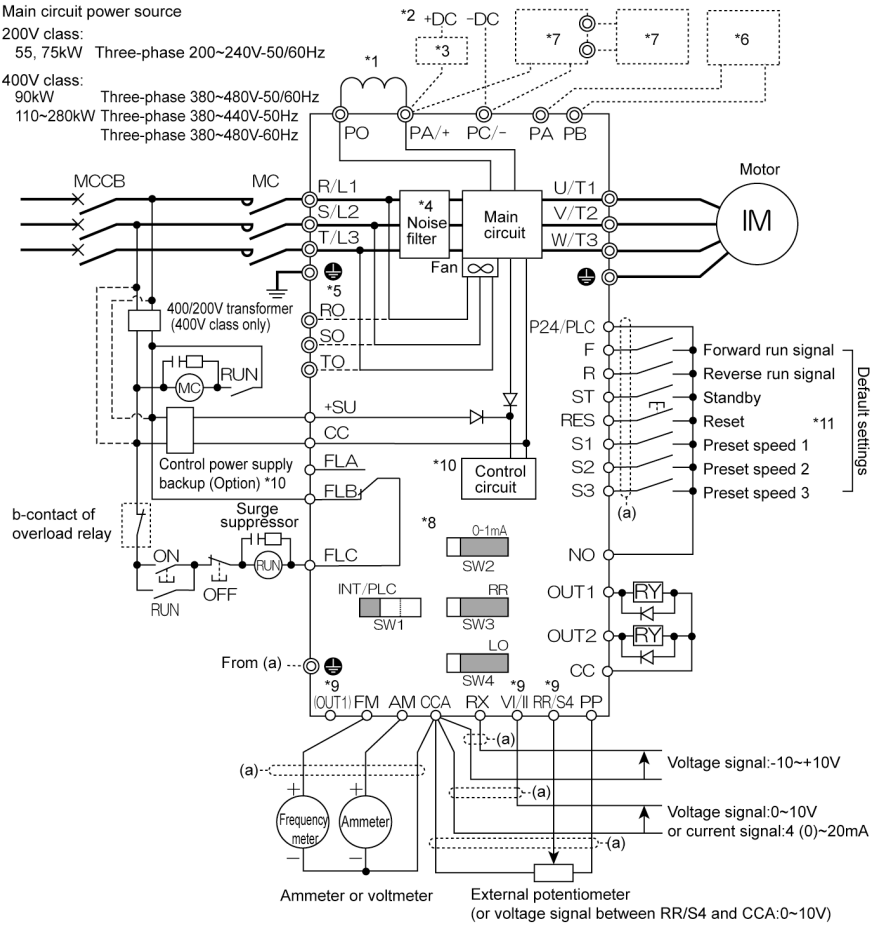

*1: Be sure to connect the DC reactor.
*2: To supply a DC power, connect the cables to the PA/+ and PC/- terminals.
*3: If you want to use a DC power supply to operate the inverter, be sure to contact your supplier customer support center, because an inrush current limiting circuit is required in such a case.
*4: The noise filter is built in for models all of 400V.
*5: For models 200V-75kW and 400V-110kW or larger, three-phase power input is necessary to drive the fan if you want to use a DC power supply.
*6: Every 200V model of any capacity and every 400V model with a capacity of 160kW or less come with dynamic braking unit drive circuits (GTR7) built into them as standard equipment, so if your inverter is among these models, connect an external braking resistor (optional) alone.
*7: If you are using a 400V/200kW model or larger, use a braking unit (optional) and an external braking resistor (optional) in combination.
*8: ⇒ Refer to Section 2.3.2 for switch functions.
*9: The functions assigned to terminals OUT1, VI/II and RR/S4 can be switched by changing parameter settings.
⇒ For details refer to Section 2.3.2.
*10: To supply control power from an external power supply for backing up the control power supplied from the inverter, an optional control power backup device (CPS002Z) is required. In such a case, the backup device is used at the same time with the internal power supply of the inverter.
The optional control power backup unit can be used with both 200V and 400V models.
To back up control power, set the parameter F647 (Control power supply backup option failure monitoring) properly.
⇒ For more information, refer to 6.33.24.
*11: When RES-CC is shorted and then opened, the inverter protective status is canceled.

[Standard connection diagram - source logic]

The figure below shows an example of typical wiring in the main circuit 400V 355-500kW inverter.

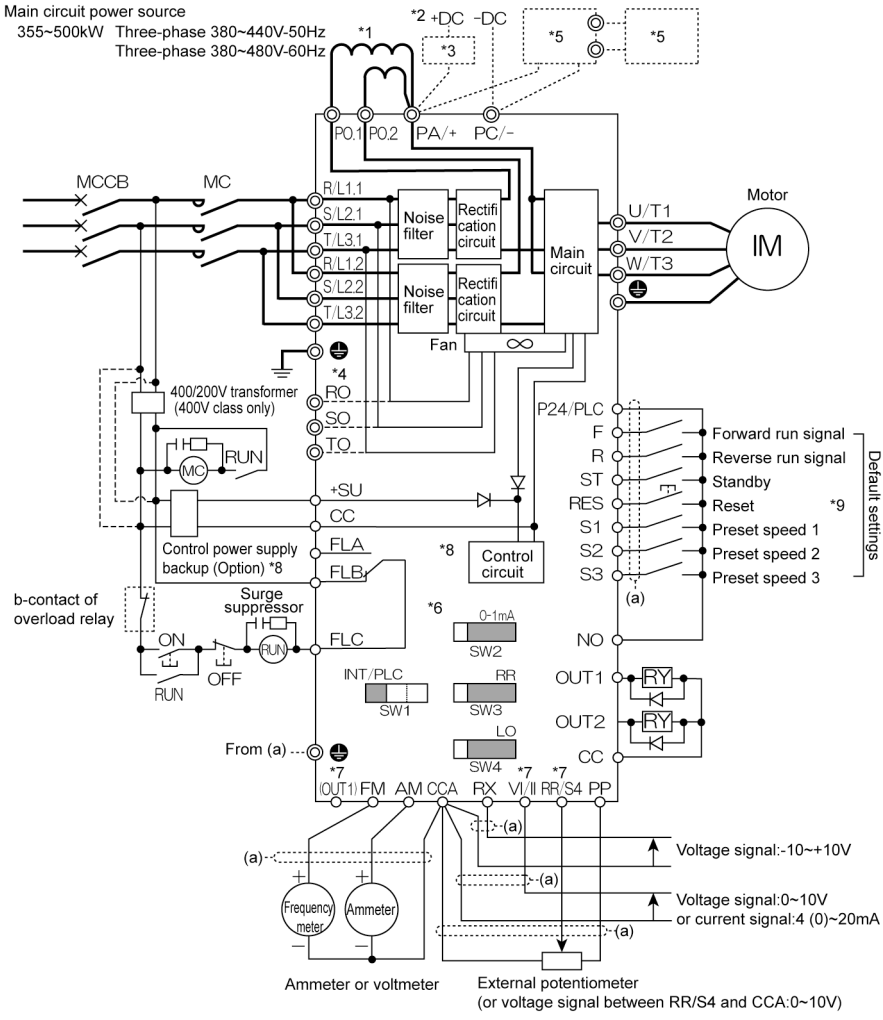

*1: Be sure to connect the DC reactor.
*2: To supply a DC power, connect the cables to the PA/+ and PC/- terminals.
*3: If you want to use a DC power supply to operate the inverter, be sure to contact your supplier customer support center, because an inrush current limiting circuit is required in such a case.
*4: Three-phase power input is necessary to drive the fan if you want to use a DC power supply.
*5: Use a braking unit (optional) and an external braking resistor (optional) in combination.
*6: ⇒ Refer to Section 2.3.2 for switch functions.
*7: The functions assigned to terminals OUT1, VI/II and RR/S4 can be switched by changing parameter settings.
⇒ For details refer to Section 2.3.2.
*8: To supply control power from an external power supply for backing up the control power supplied from the inverter, an optional control power backup device (CPS002Z) is required. In such a case, the backup device is used at the same time with the internal power supply of the inverter.
To back up control power, set the parameter F647 (Control power supply backup option failure monitoring) properly.
⇒ For more information, refer to 6.33.24.
*9: When RES-CC is shorted and then opened, the inverter protective status is canceled.

2.3 Description of terminals

2.3.1 Main circuit terminals

This diagram shows an example of wiring of the main circuit. Use options if necessary.

■ Power supply and motor connections

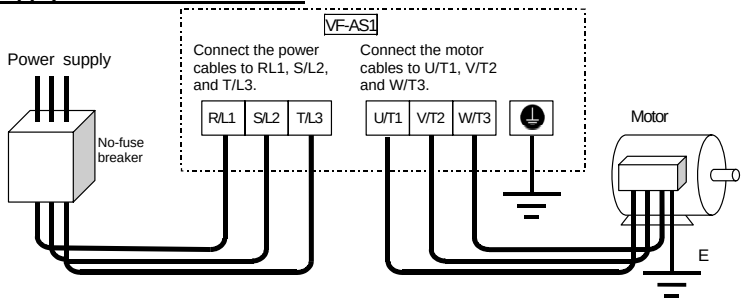

■ Connection with peripheral equipment

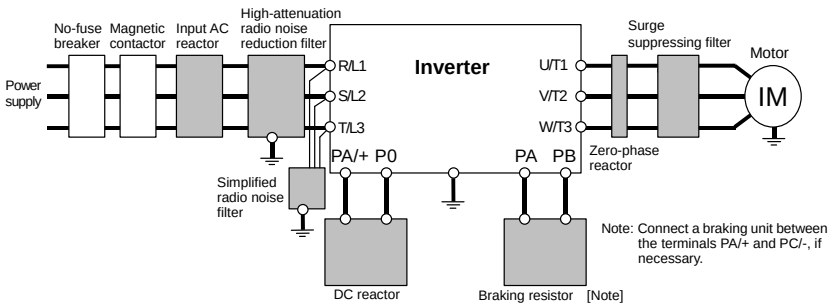

■ Main circuit

Terminal symbol	Terminal function
⏚	Grounding terminal for inverter casing
R/L1, S/L2, T/L3 (R/L1.1, S/L2.1, T/L3.1, R/L1.2, S/L2.2, T/L3.2) *1	Power input terminal 200V class: 0.4~75kW Three-phase 200~240V-50/60Hz 400V class: 0.75~90kW Three-phase 380~480V-50/60Hz 110~500kW Three-phase 380~440V-50Hz Three-phase 380~480V-60Hz
U/T1, V/T2, W/T3	Connect to a (3-phase induction) motor.
PA/+, PB (PA, PB) *2	Connect a braking resistor. Change the parameters Pb, Pbr and PbCP if necessary. 200kW models and larger are not equipped with terminal PB.
PC/-	This is a negative potential terminal in the internal DC main circuit. DC power supply can be input across the PA/+ terminals (positive potential). (For 200V-18.5kW or more models, and 400V-22kW or more models, an optional circuit is needed to suppress a rush current.)
PO, PA/+	Terminals for connecting a DC reactor (DCL: optional external device). Shorted by a short bar when shipped from the factory (200V: 45kW or smaller, 400V: 75kW or smaller). Before installing DCL, remove the short bar. (The rating of 400V-355~500 kW have the double terminals of PO.)
RO, SO, TO	200V class: 75kW 400V class:110kW~500kW Inverter's cooling fan power input terminals. When using a DC power supply, connect three-phase power cables. When using DC power for the main circuit, be sure to connect a three-phase power supply to these terminals. For more information, refer to 10.6.5.

*1: Value in ( ) 400V-355~500kW.
*2: Value in ( ) 200V-55kW or larger, 400V-90~160kW.

2.3.2 Control circuit terminal block

The control circuit terminal block is common to all equipment.

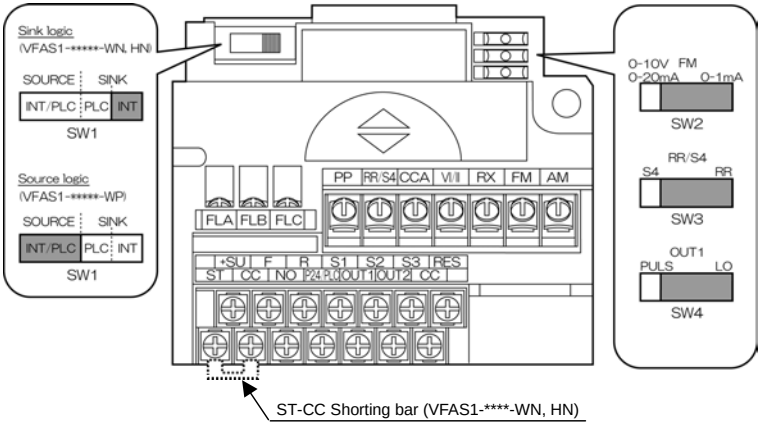

⇒ How to set input terminal function, refer to section 7.

Terminal symbol	Input/ output		Function (Sink logic) VFAS1-****-WN, HN	Function (Source logic) VFAS1-****-WP	Electrical specifications
F	Input	Multifunction programmable contact input	Shorting across F-CC causes forward rotation; open causes deceleration stop. (Across ST-CC is short state.)	Shorting across F-P24/PLC causes forward rotation; open causes deceleration stop.	Voltage free contact input 24Vdc-5mA or less Lan current signal. Choose low current contacts to avoid poor attaching. *Sink/source selectable with SW1 Sink input ON:Less than DC10V OFF:DC16V or more Source input ON:DC11V or more OFF:Less than DC5V Note: Even when an external power supply is used (in sink logic mode, i.e., when SINK (PLC) is selected), connect the reference potential-side (0V side) cable from the power supply to the CC terminal.
R	Input		Shorting across R-CC causes reverse rotation; open causes deceleration stop. (Across ST-CC is short state.)	Shorting across R-P24/PLC causes reverse rotation; open causes deceleration stop.	
ST	Input		The motor is on standby if ST and CC are connected. It coasts to a stop if this connection is broken. This terminal can be used for interlocking.	The motor is on standby if ST and P24/PLC are connected. It coasts to a stop if this connection is broken. This terminal can be used for interlocking.	
RES	Input		Shorting and then opening RES-CC cancels the status held by an inverter protective function. When the inverter is operating normally, shorting and then opening RES-CC produces no effect.	Shorting and then opening RES-P24/PLC cancels the status held by an inverter protective function. When the inverter is operating normally, shorting and then opening RES-P24/PLC produces no effect.	
S1	Input		Shorting across S1-CC causes preset speed operation.	Shorting across S1-P24/PLC causes preset speed operation.	
S2	Input		Shorting across S2-CC causes preset speed operation.	Shorting across S2-P24/PLC causes preset speed operation.	
S3	Input		Shorting across S3-CC causes preset speed operation.	Shorting across S3-P24/PLC causes preset speed operation.	
RR/S4	Input		SW3: When SW3 is in the S4 position, S4 and CC are shorted and preset speed operation is selected.	SW3: When SW3 is in the S4 position, S4 and P24/PLC are shorted and preset speed operation is selected.	

SW1=SINK (INT): Sink logic (When the internal 24V power supply is used)

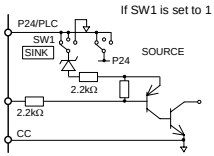

SW1=SINK (PLC): Sink logic (When an external 24V power supply is used)

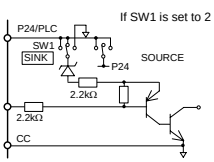

SW1=SOURCE (INT/PLC): Source logic (When the internal 24V power supply or an external 24V power supply is used)

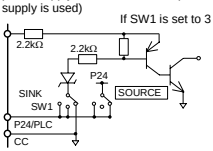

2

Terminal symbol	Input/ output	Function (Sink Source logic)	Electrical specifications	Inverter internal circuits
P24/ PLC	Output	24Vdc power output (when SW1 is in any position other than PLC) 24V internal output terminal	24Vdc-200mA	-
	Input	If SW1 is turned to the PLC position, this terminal can be used as a common terminal when an external power supply is used.	-	-
CC *1	Common to input/ output	Digital signal equipotential (0V) terminal for the control circuit and equipotential (0V) terminal for an optional control power supply backup.	-	-
PP	Output	Analog input setting power output	10Vdc (Permissible load current:10mAdc)	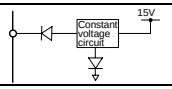
RR/S4	Input	SW3: Multifunction programmable analog input terminal when SW3 is in the RR position. Standard default setting:0~10Vdc input and 0~60Hz frequency.	10Vdc (Internal impedance:30 kΩ)	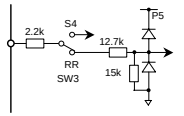
VI/I I	Input	Multifunction programmable analog input. Standard default setting: 0~10Vdc input and 0~60Hz frequency. This terminal can also be used as a 4-20mAdc (0-20mAdc) input terminal, if the parameter F108 set to 1.	10Vdc (Internal impedance:30 kΩ) 4~20mA (Internal impedance:242Ω)	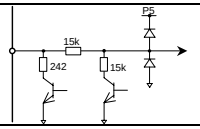
RX	Input	Multifunction programmable analog input. Standard default setting:0~±10Vdc input and 0~±60Hz frequency.	10Vdc (Internal impedance:22 kΩ)	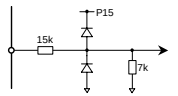
FM	Output	Multifunction programmable analog output. Standard default setting: output frequency Use this terminal to connect a 1mAdc full-scale ammeter. This terminal can also be used as a 0-10V (F688 1=0) or 0-20mA terminal (F688 1= 1), if the SW2 switch is set to 0-10V/0-20mA side.	1mA full-scale DC ammeter (Allowable load resistance 7.5kΩ or less) or 7.5Vdc-1mA full-scale DC voltmeter 0-10V full-scale DC voltmeter (Allowable load resistance 500Ω or more)/0-20mA (4-20mA) Full-scale DC ammeter voltmeter (Allowable load resistance 500Ω or less)	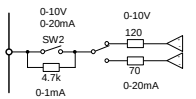
AM	Output	Multifunction programmable analog output. Standard default setting: output current Use this terminal to connect a 1mAdc full-scale ammeter or 7.5Vdc (10Vdc)-1mA full-scale voltmeter.	1mA full-scale DC ammeter ammeter (Allowable load resistance 7.5kΩ or less) or 7.5Vdc-1mA full-scale DC voltmeter	
OUT1	Output	Multifunction programmable open collector output. The default setting is to output a signal when output low speed threshold has been reached. Depending on the SW4 setting, pulses are output with frequencies of 1.00kHz to 43.20kHz. Standard default setting:3.84kHz	Open collector output 24Vdc-50mA *Sink logic/source logic switchable	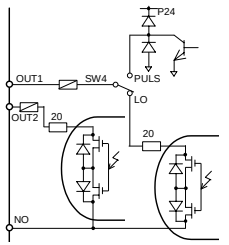
OUT2		Multifunction programmable open collector output. By default, it is set to output a signal indicating the completion of acceleration or deceleration.		
NO		Digital output signal equipotential (0V) terminal for the control circuit. It is isolated from the CC terminal.		
CCA *1	Common to input/ output	Analog input/output signal equipotential (0V) terminal for the control circuit.	-	-

*1: Although the CC terminal and the CCA terminal are not insulated, they should be used separately, one for the logic circuit and the other for the analog circuit

Terminal symbol	Input/ output	Function (Sink Source logic)	Electrical specifications	Inverter internal circuits
+SU	Input	DC power input terminal for operating the control circuit. Connect a control power backup device (optional) between +SU and CC.	Voltage:24Vdc±10% Use a power supply with a current rating of 1.05A or more. (In case of not install options, current rating is 300mA)	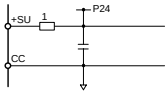
FLA FLB FLC	Output	Relay contact output. Contact rating Used to detect the activation of the inverter's protective function. Contact across FLA-FLC is closed and FLB-FLC is opened during protection function operation.	250Vac-2A 30Vdc-1A :at resistance load 250Vac-1A :cosϕ=0.4	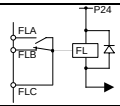

I

SW	SW settings	Default setting (Settings marked with ●)	Function
SW1	SOURCE SINK INT/PLC PLC INT	● (-WN, HN)	Setting for using the inverter's internal power supply in sink logic mode
	SOURCE SINK INT/PLC PLC INT		Setting for using the inverter's external power supply in sink logic mode
	SOURCE SINK INT/PLC PLC INT	● (-WP)	Setting for operating the inverter in source logic mode
SW2	0-10V FM 0-20mA 0-1mA	●	Setting for using the analog output terminal FM to output current of 0-1mA
	0-10V FM 0-20mA 0-1mA		Setting for using the analog output terminal FM to output current of 0-10V or 0-20mA (4-20mA) 0-10V (F68 1=0) or 0-20mA (F68 1= 1) can be selected by changing parameter settings.
SW3	RR/S4 S4 RR	●	Setting for using the input terminal RR/S4 as an analog input terminal (0-10Vdc)
	RR/S4 S4 RR		Setting for using the input terminal RR/S4 as a contact input terminal
SW4	OUT1 PULS LO	●	Setting for using the output terminal OUT1 as a logic output terminal When turning the switch to this position, always set the parameter F669 to 0 (logic output).
	OUT1 PULS Lo		Setting for using the output terminal OUT1 as a pulse output terminal When turning the switch to this position, always set the parameter F669 to 1 (pulse output).

2

■ Sink logic/source logic (When inverter's internal power supply is used)

Current flowing out turns control input terminals on. These are called sink logic terminals.
The method generally used in Europe is source logic in which current flowing into the input terminal turns it on.
Sink logic terminals and source logic terminals are sometimes referred to as negative logic terminals and positive logic terminals, respectively.
Each logic is supplied with power from either the inverter's internal power supply or an external power supply, and its connections vary depending on the power supply used.

<Examples of connections when the inverter's internal power supply is used>

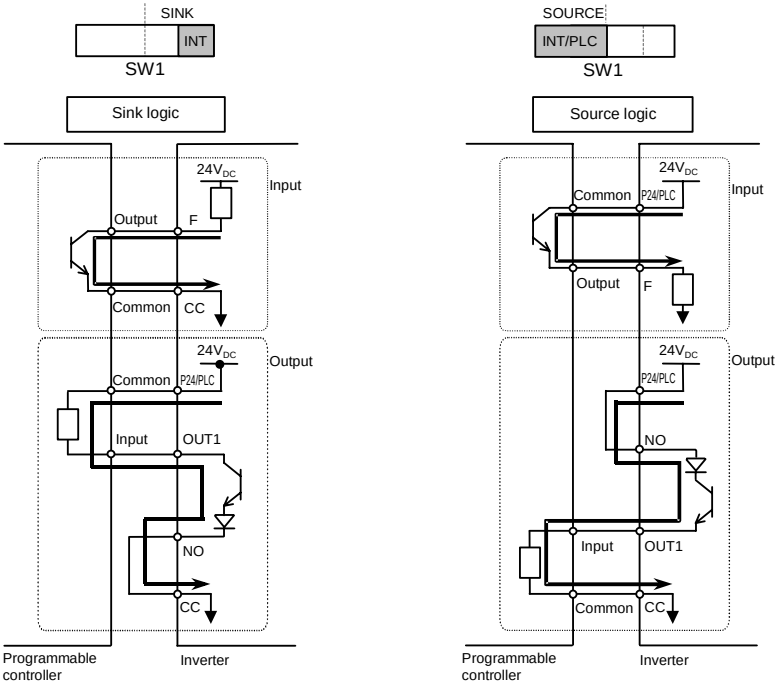

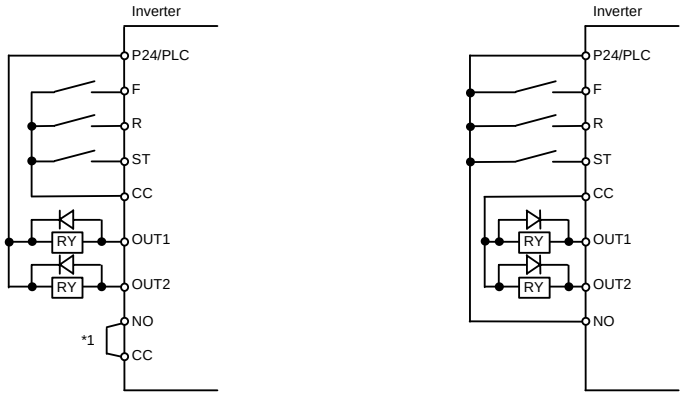

*1:Be sure to short across NO-CC

■ Sink logic/source logic (When an external power supply is used)

The P24/PLC terminal is used to connect to an external power supply or to insulate a terminal from other input or output terminals. Use the slide switch SW1 to switch between sink logic and source logic configurations.

<Examples of connections when an external power supply is used>

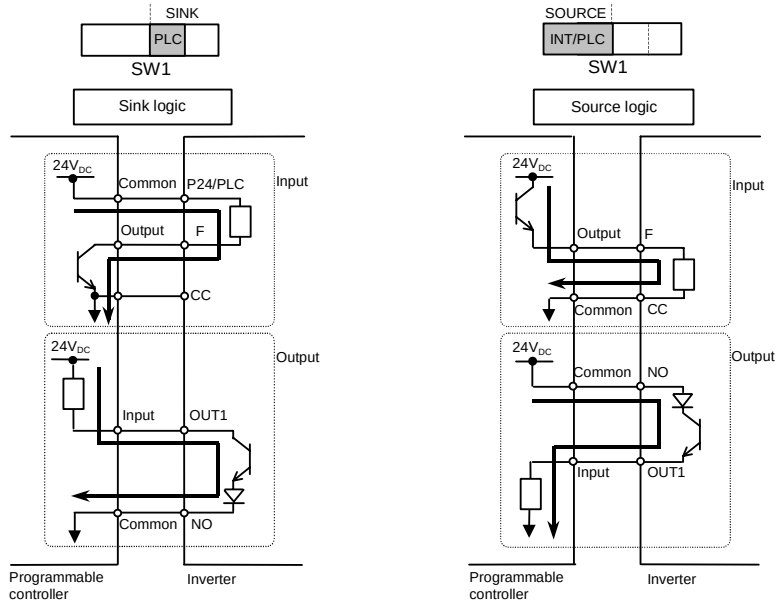

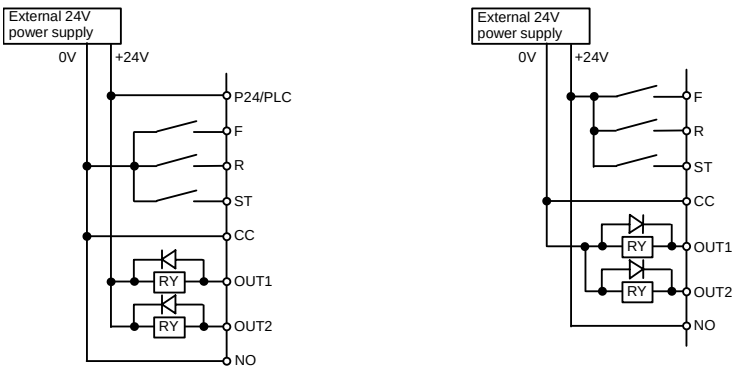

Note: Be sure to connect the 0V terminal on the external power supply to the CC terminal on the inverter.

*When OUT1 is used as a pulse output terminal (when SW4 is in the PULS position), the circuit shown below is always formed regardless of the logic selected (sink or source) and the power supply used (internal or external power supply).

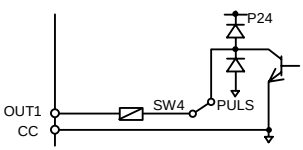

2.3.3 RS485 communication connector

The VF-AS1 is equipped with two connectors: a two-wire RS485 connector (on the operation panel) and a four-wire RS485 connector. The two wire RS485 connector is used to connect an external option (such as remote keypad or computer) to the inverter. To connect to a network, use the four-wire RS485 connector, following the instructions below.

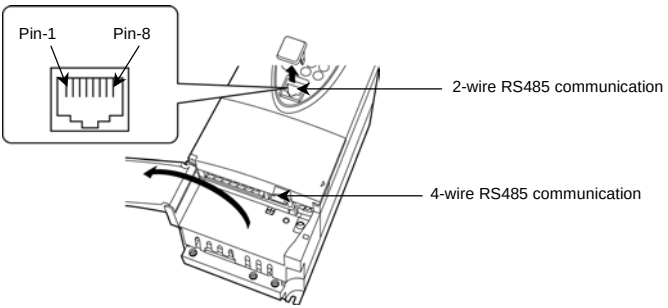

2-wire RS485

Signal name	Pin number	Description
DA	4	Same phase data
DB	5	Anti-phase data
SG	8	Ground line of signal data

This table shows signal line of inverter side.

* Never use pin-1, 2, 3, 6 and 7.

4-wire RS485

Signal name	Pin number	Description
RXA	4	Same phase reception data (positive line)
RXB	5	Anti-phase reception data (positive line)
TXA	3	Same phase transmitting data (positive line)
TXB	6	Anti-phase transmitting data (positive line)
SG	2, 8	Ground line of signal data

This table shows signal line of inverter side.

(Example: RXA signal is received by inverter.)

* Never use pin-1 (P24) and pin-7 (P11).

■ Connecting diagram for 4-wire RS485 communication

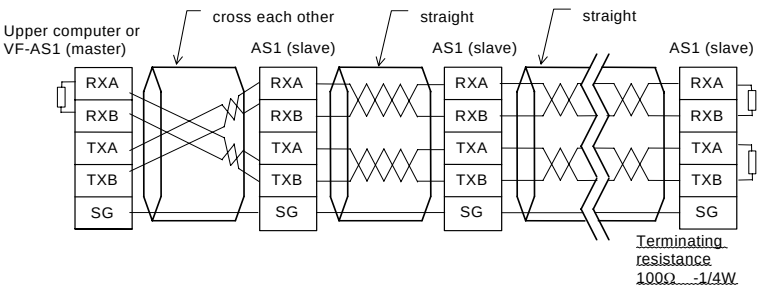

■ Note

* Separate the communication line and the main circuit wiring by 20cm or more.
* Never use pin-1 (P24) and pin-7 (P11).
* Connect RXA and RXB, between TXA and TXB using twisted pair cable.
* Connect terminating resistances at both ends of a transmission line.
* When using 2-wire type, short RXB to TXB and RXA to TXA.
  When connecting a communications device via the two-wire connector, carefully read the precautions for use in the operating manual for the communications device.
* When connecting the VF-AS1 to other inverters, you do not need to connect the master receive lines (pins 4 and 5) or the slave send lines (pins 3 and 6).

3. Operations

This section explains the basics of operation of the inverter.

Check the following again before starting operation.

1) Are all wires and cables connected correctly?
2) Does the supply voltage agree with the rated input voltage?

Warning	
Prohibited	• Do not touch inverter terminals when electrical power is applied to the inverter even if the motor is stopped. Touching the inverter terminals while power is connected to it may result in electric shock. • Do not touch switches when the hands are wet and do not try to clean the inverter with a damp cloth. Such practices may result in electric shock. • Do not go near the motor in alarm-stop status when the retry function is selected. The motor may suddenly restart and that could result in injury. Take measures for safety, e.g. attaching a cover to the motor, against accidents when the motor unexpectedly restarts.
Mandatory	• Turn power on only after attaching the front cover or closing door if enclosed in a cabinet. If power is turned on without the front cover attached or closing door may result in electric shock or other injury. • If the inverter begins to emit smoke or an unusual odor, or unusual sounds, immediately turn power off. If the equipment is continued in operation in such a state, the result may be fire. Call your local sales agency for repairs. • Always turn power off if the inverter is not used for long periods of time. • Do not turn on the power before attaching the front cover. When enclosed inside a cabinet and using with the front cover removed, always close the cabinet doors first and then turn power on. If the power is turned on with the front cover or with the cabinet doors open, it may result in electric shock. • Make sure that operation signals are off before resetting the inverter after malfunction. If the inverter is reset before turning off the operating signal, the motor may restart suddenly causing injury.

Warning	
Prohibited contact	• Do not touch heat radiating fins or discharge resistors. These devices are hot, and you'll get burned if you touch them.
Prohibited	• Observe all permissible operating ranges of motors and mechanical equipment. (Refer to the motor's instruction manual.) Not observing these ranges may result in injury.

3.1 Setting/monitor modes

The VF-AS1 has the following three setting/monitor modes.

Standard monitor mode **The standard inverter mode. This mode is enabled when inverter power goes on.**

This mode is for monitoring the output frequency and setting the frequency reference value. If also displays information about status alarms during running and trips.

- Setting frequency reference values ⇒ Refer to Section 3.2.2.
- Status alarm

  If there is an error in the inverter, the alarm signal and the frequency will flash alternately in the LED display.

  C : When a current flows at or higher than the overcurrent stall prevention level.
  P : When a voltage is generated at or higher than the over voltage stall prevention level.
  L : When the cumulative amount of overload reaches 50% or more of the overload trip value.
  H : When temperature inside the inverter rises above overheating protection alarm level (about 95°C)

Setting monitor mode **The mode for setting inverter parameters.**

⇒ How to set parameters, refer to Section 4. 1.

This mode is divided into two modes according to the parameter readout mode selected.

Quick mode	:Eight frequently used basic parameters are just displayed. The maximum 32 parameters that you select by yourselves are displayed.
Standard setting mode	:Both basic and extended all parameters are displayed.

Status monitor mode **The mode for monitoring all inverter status.**

Allows monitoring of set frequencies, output current/voltage and terminal information.

⇒ Refer to Section 8.

Pressing the key MODE will move the inverter through each of the modes.

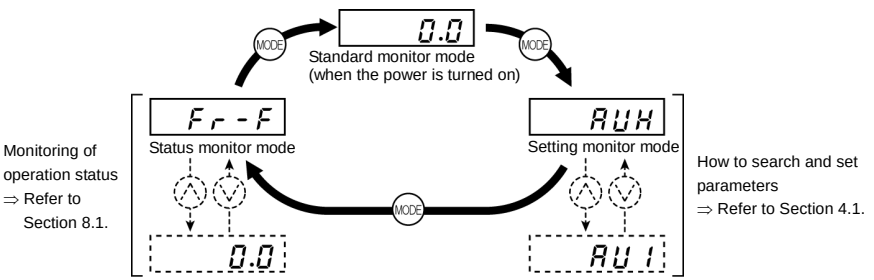

3.2 Simplified operation of the VF-AS1

On of three operation modes can be selected: terminal board operation, operation panel and combination of both.
⇒ For other operation modes, refer to Section 5.5.

Terminal board mode :Operation by means of external signals

Operation panel mode :Operation by pressing keys on the operation panel

Operation panel + terminal board mode :Frequency, start/stop signals can be sent individually from the operating panel and terminal board.

3.2.1 Terminal board operation

In this mode, the motor is started or stopped according to the ON/OFF signal to input terminals (such as the ST terminal and the F terminal). Also, the frequency is set according to the potentiometer/voltage/current signals to analog input terminals (such as the RR/S4 terminal, VI/II terminal and RX terminal).
⇒ For more details, refer to Section 7.

■ Example of standard connection

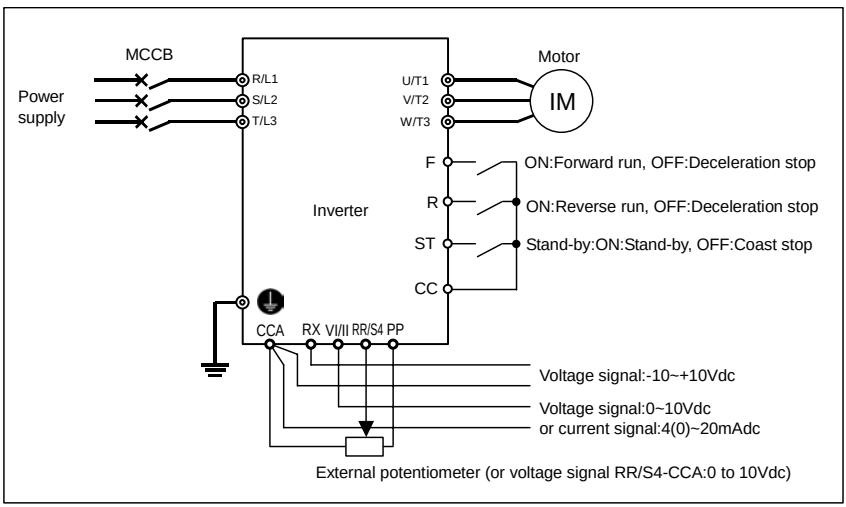

■ Run/Deceleration stop **Selecting a command mode for basic parameters CMOd=0 (standard default setting)**

F and CC are connected: Forward run

F and CC are disconnected: Deceleration stop

(When terminals ST and CC are electrically connected)

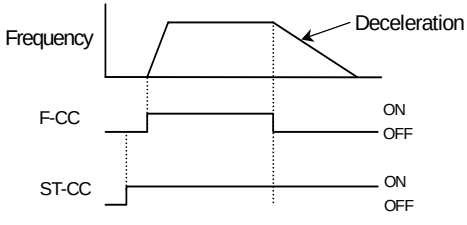

For coast stop
Open the connection between ST and CC when stopping the motor in the state described at left. The monitor on the inverter at this time will display OFF.

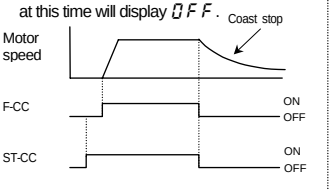

■ Frequency setting

1) Setting the frequency using potentiometer

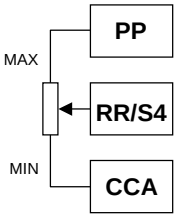

:Frequency settings
With potentiometer

Potentiometer
The operation frequency by potentiometer (1~10kΩ- 1/4W) for setting
⇒ Refer to Section 7.3 for details of adjustment.

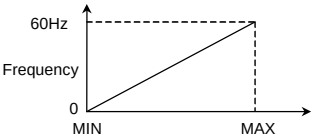

[Parameter setting]

Set the "basic parameter frequency setting mode selection 1" parameter FMOd to 2.

(There is no need to set this parameter before the first use after purchase.)

2) Setting the frequency using input voltage (0~10V)

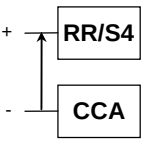

:Voltage signal 0-10Vdc

Voltage signal
Voltage signal (0~10V) for setting the operation frequency
⇒ Refer to Section 7.3 for details of adjustment.

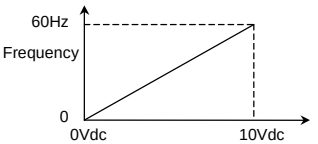

[Parameter setting]

Set the "basic parameter frequency setting mode selection 1" parameter FMOd to 2.

(There is no need to set this parameter before the first use after purchase.)

3) Setting the frequency using current input (4(0)~20mA)

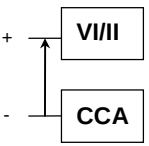

:Current signal 4(0)-20mAdc

Current signal
Current signal (4(0)~20mA) for setting the operation frequency
⇒ Refer to Section 7.3 for details of adjustment.

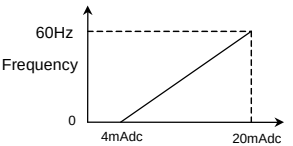

[Parameter setting]

Set the "extended parameter analog input VI/II voltage/current switching" parameter FMOd to 1.
In addition, set the "basic parameter frequency setting mode selection 1" parameter F108 to 1.
To bring the operation frequency to 0Hz at an input current of 4mA, set the "VI/II input point setting 1" parameter F201 to 20.

4) Setting the frequency using input voltage (0~10Vdc)

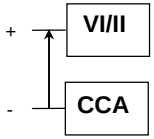

:Voltage signal 0-10Vdc

Voltage signal
Voltage signal (0~10V) for setting the operation frequency
⇒ Refer to Section 7.3 for details of adjustment.

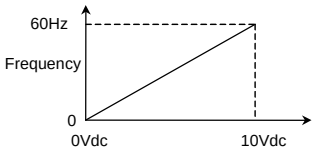

[Parameter setting]

Set the "extended parameter analog input VI/II voltage/current switching" parameter FA0d to 1.
In addition, set the "basic parameter frequency setting mode selection 1" parameter F108 to 0 (default setting).

5) Setting the frequency using input voltage (0~±10Vdc)

The direction can be changed by switching between positive and negative signals.

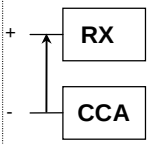

:Voltage signal 0~±10Vdc

Voltage signal
Voltage signal (0~±10V) for setting the operation frequency
⇒ Refer to Section 7.3 for details of adjustment.

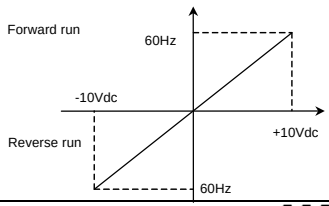

[Parameter setting]

Set the "basic parameter frequency setting mode selection 1" parameter FA0d to 3.

Note: Set reference frequency priority selection F200 to 0 (FA0d/F207 terminal switching, default setting).
Changing the settings of two speed command parameters at a time, refer to Section 6.6.

[Example of setting: To set the frequency by applying a current of 4(0)-20mAdc via the VI/II terminal.]

Key operated	LED display	Operation
	0.0	Displays the operation frequency. (Perform during operation stopped.) (When standard monitor display selection F710=0 [Output frequency])
MODE	AUH	Displays the first basic parameter "History function (AUH)."
△ ▽	FA0d	Press either the △ or ▽ key to select "FA0d."
ENT	2	Press the ENTER key to display the parameter setting (Default setting:2).
▽	1	Press the ▽ key to change the parameter to 1.
ENT	1⇔FA0d	Press the ENTER key to save the changed parameter. FA0d and the parameter are displayed alternately.

Key operated	LED display	Operation
∧ ∨	F1--	Press either the △ key or the ▽ key to change to the parameter group F1--.
ENT	F100	Press the ENTER key to display the first extended parameter F100.
∧	F108	Press the △ key to change to F108.
ENT	0	Pressing the ENTER key allows the reading of parameter setting. (Default setting:0)
∧	1	Press the △ key to change the parameter to 1.
ENT	1⇔F108	Press the ENTER key to save the changed parameter. F108 and the parameter are displayed alternately.
∧ ∨	F2--	Press either the △ key or the ▽ key to change to the parameter group F2--.
ENT	F200	Press the ENTER key to display the first extended parameter F200.
∧	F201	Press the △ key to change to F201.
ENT	0	Pressing the ENTER key allows the reading of parameter setting. (Default setting:0)
∧	20	Press the △ key to change the parameter to 20.
ENT	20⇔F201	Press the ENTER key to save the changed parameter. F201 and the parameter are displayed alternately.

3.2.2 Panel operation

This section describes how to start/stop the motor, and set the operation frequency with the operating panel.

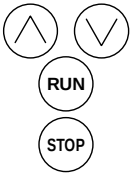

:Set frequency

:Motor starts

:Stop the motor (deceleration stop)

For coast stop
Change the setting of the parameter F721.

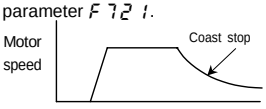

The operation frequency can be changed anytime even during operation.

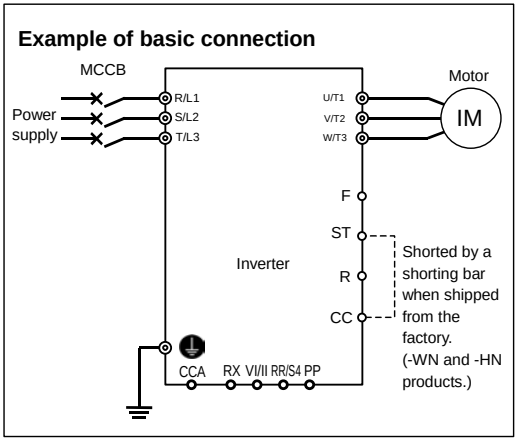

■Changing parameter settings

For control panel operation, parameter settings need to be changed in advance.
If you use parameter AU4 that makes it possible to select an operation mode in one operation, you can complete this operation by just making settings once.
Here are the steps to be followed to change the setting to 5 (frequency setting and operation by means of the control panel).

[Setting procedure]

Key operated	LED display	Operation
	0.0	Displays the operation frequency (operation stopped). (When standard monitor display selection F710=0 [Output frequency])
EASY		Press the EASY key.
MODE	AU4	AU4 (automatic function setting) at the head of the basic parameters available in quick mode is displayed.
ENT	0	Press the ENTER key to display the parameter setting (Default setting: 0).
∧	5	Press the △ key to change the parameter to 5 (Frequency setting and operation on operation panel).
ENT	5⇔AU4	Press the ENTER key to save the changed parameter. AU4 and the parameter are displayed alternately.

*Pressing the MODE key returns the display to standard monitor mode (displaying operation frequency).

■ **Example of operation panel control**

Key operated	LED display	Operation
	0.0	The running frequency is displayed. (When standard monitor display selection F710=0 [Output frequency])
∧ ∨	50.0	Set the operation frequency.
ENT	50.0⇔FC	Press the ENTER key to save the operation frequency. FC and the frequency are displayed alternately.
RUN	0.0⇒ 50.0	Pressing the RUN key causes the motor to accelerate to the set frequency in the specified acceleration time.
∧ ∨	60.0	Pressing the △ key or the ▽ key will change the operation frequency even during operation.
STOP	60.0⇒ 0.0	Pressing the STOP key reduces the frequency and causes the motor to decelerate to a stop.

3

■ **Selecting a stop mode with the operation panel**

In addition to deceleration stop by pressing STOP key (in the specified deceleration time), the operating panel has the following two stop modes.

Stop mode	Action	Operation, setting, etc.
Coast stop	In this mode, power supply from the inverter to the motor is shut off instantaneously, which causes the motor to coast stop.	This stop mode is enabled only in modes where the operation panel can be used for operation. To enable the coast stop mode, set the parameter F721=1. ⇒ For more details, refer to Section 6.36.6. *Default setting:F721=0 (Deceleration stop)
Emergency stop (from the operation panel in modes other than the panel operation mode)	A stop mode can be selected from among: • Coast stop • Deceleration stop • Emergency DC braking • Deceleration stop Note: Default setting:F603=0 (Coast stop)	In modes other than the operation panel operation mode, you can stop the motor (emergency stop) by entering a command from the operation panel. (To quickly stop the motor in the operation panel operation mode, set the parameter F721 to this mode.) Pressing the STOP key on the panel twice enables emergency stop. **(1) Press the STOP key.** "EOFF" starts blinking. **(2) Press the STOP key again.** F603(Emergency stop)=0 to 3, the motor makes an emergency stop (or trips) according to the setting. "E" will be displayed and a failure detection signal generated (FL activated). Select the output terminal function 134 (135) to deactivate FL. To clear "EOFF," press any key **other than the STOP key** while "EOFF" is being displayed. ⇒ For more details, refer to Section 6.33.3. *Default setting:F603=0 (Coast stop) - Warning - The emergency stop function is designed to forcefully stop the motor by pressing the Stop key on the operation panel in modes other than the operation panel control mode. The emergency stop function cannot be disabled by any setting. Every emergency stop is memorized as a trip in the trip history record.

4. Searching and setting parameters

There are two types of setting mode quick mode and standard setting mode.

Quick mode : EASY key: ON
Eight frequently used basic parameters are just displayed (Factory default position).

Quick mode (EASY)

Title	Function
AU4	Automatic function setting
Pt	V/f control mode selection
FH	Maximum frequency
ACC	Acceleration time 1
dEC	Deceleration time 1
tHr	Motor electronic thermal protection level 1
FM	FM terminal meter adjustment
PSEL	Registered parameter display selection

Parameters you selected can be displayed by changing the parameter. (Up to 32 parameters)

Standard setting mode : EASY key: OFF
Both basic and extended all parameters are displayed.

- **Basic parameters** : This parameter is a basic parameter for the operation of the inverter.
  ⇒ For details of basic parameters, refer to Section 5.
  ⇒ For parameter settings, refer to Section 11.
- **Extended parameters** :The parameters for detailed and special setting.
  ⇒ For details of extended parameters, refer to Section 6.
  ⇒ For parameter settings, refer to Section 11.

For reasons of safety, the following parameters have been set up so that they cannot be reprogrammed while the inverter is running.

[Basic parameters]

AU1	(Automatic acceleration/deceleration)
AU2	(Automatic torque boost)
AU4	(Automatic function setting)
CMOd	(Command mode selection)
FMOd	(Frequency setting mode selection 1)
Pt	(V/f control mode selection)
uL	(Base frequency 1)
uLu	(Base frequency voltage 1)
FH	(Maximum frequency)
UuS	(Auto-restart control selection)
UuC	(Regenerative power ride-through control)
Pb	(Dynamic braking selection)
Pbr	(Dynamic braking resistance)
PbCP	(Allowable continuous braking resistance)
tYP	(Factory default setting)

⇒ To write-protect extended parameters during operation, refer to Section 11.

4.1 How to set parameters

This section explains how to set parameters, while showing how parameters are organized in each setting monitor mode.

4.1.1 Setting parameters in the selected quick mode

To place the inverter in this mode, press the EASY key (the LED lights up), and then press the MODE key.

Note that extended parameters are not displayed in the quick mode.

Quick mode (EASY)

Title	Function
AUY	Automatic function setting
Pt	V/f control mode selection
FH	Maximum frequency
ACC	Acceleration time 1
dEC	Deceleration time 1
tHr	Motor electronic thermal protection level 1
FM	FM terminal meter adjustment
PSEL	Registered parameter display selection

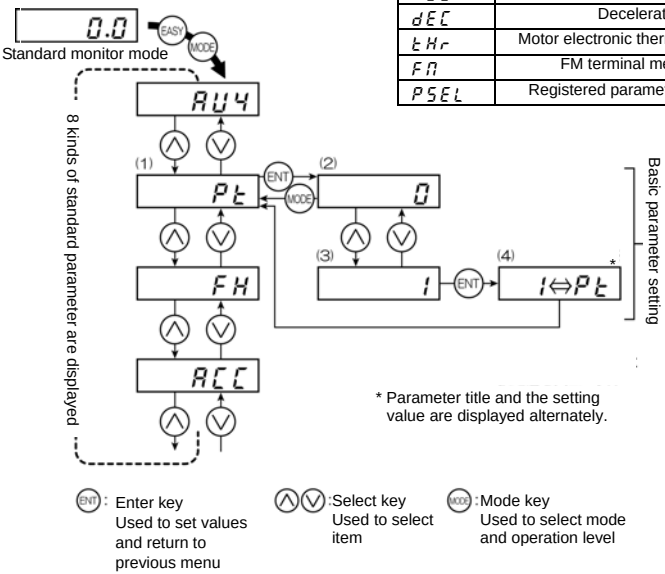

■ How to set basic parameters

(1) Selects parameter to be changed. (Press the ∧ or ∨ key.)

(2) Reads the programmed parameter setting. (Press the ENT key.)

(3) Change the parameter value. (Press the ∧ or ∨ key.)

(4) Press this key to save the change. (Press the ENT key.)

■ Adjustment range and display of parameters

HI: An attempt has been made to assign a value that is higher than the programmable range. Or, as a result of changing other parameters, the programmed value of the parameter that is now selected exceeds the upper limit.

LO: An attempt has been made to assign a value that is lower than the programmable range. Or, as a result of changing other parameters, the programmed value of the parameter that is now selected exceeds the lower limit.

If the above alarm is flashing on and off, no setting can be done of values that are equal to or greater than HI or equal to or lower than LO.

4.1.2 Setting parameters in the standard setting mode

Press the MODE key to place the inverter in this mode.

■ How to set basic parameters

(1) Selects parameter to be changed.
(Press the ∧ or ∨ key.)

(2) Reads the programmed parameter setting.
(Press the ENT key.)

(3) Change the parameter value.
(Press the ∧ or ∨ key.)

(4) Press this key to save the change. (Press the ENT key.)

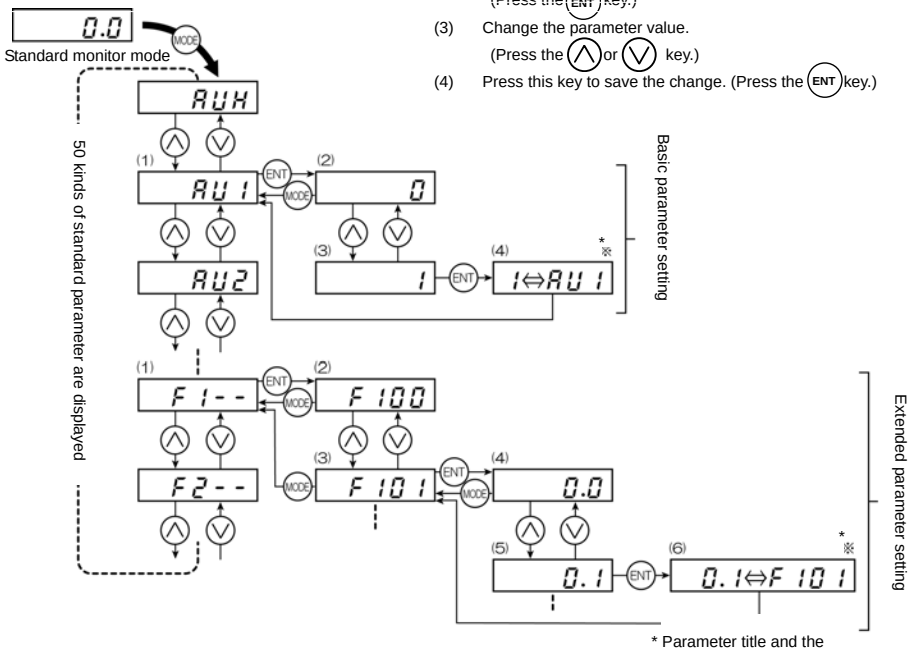

ENT: Enter key
Used to set values and return to previous menu

∧∨: Select key
Used to select item

MODE: Mode key
Used to select mode and operation level

* Parameter title and the setting value are displayed alternately.

■ How to set extended parameters

Each extended parameter is composed of an "F" and three figures that follow the f, so first select and read out the heading of the parameter you want "F 1 - -" ~ "F 9 - -." ("F 1 - -":Parameter bearing a number between 100 and 199, "F 9 - -":Parameter bearing a number between 900 and 999)

(1) Select the title of the parameter you want to change. (Press the ∧ or ∨ key.)

(2) Press the Enter key to activate the selected parameter. (Press the ENT key.)

(3) Selects parameter to be changed. (Press the ∧ or ∨ key.)

(4) Reads the programmed parameter setting. (Press the ENT key.)

(5) Change the parameter value. (Press the ∧ or ∨ key.)

(6) Press this key to save the change. (Press the ENT key.)

■ Adjustment range and display of parameters

HI: An attempt has been made to assign a value that is higher than the programmable range. Or, as a result of changing other parameters, the programmed value of the parameter that is now selected exceeds the upper limit.

LO: An attempt has been made to assign a value that is lower than the programmable range. Or, as a result of changing other parameters, the programmed value of the parameter that is now selected exceeds the lower limit.

If the above alarm is flashing on and off, no setting can be done of values that are equal to or greater than HI or equal to or lower than LO.

4.2 Functions useful in searching for a parameter or changing a parameter setting

This section explains functions useful in searching for a parameter or changing a parameter setting. To use these functions, a parameter needs to be selected or set in advance.

Changed parameter search function

Automatically searches for only those parameters that are programmed with values different from the standard default setting. To use this function, select the Gru parameter.

⇒ For more details, refer to Section 5.21.

Parameter change history function

Automatically searches for the last five parameters that have been set to values different from their standard default values. To use this function, select the AUH parameter.

⇒ For more details, refer to Section 5.1.

Function of resetting all parameters to their default settings

Use the tYP parameter to reset all parameters back to their default settings.

⇒ For more details, refer to Section 5.20.

5. Basic parameters

This parameter is a basic parameter for the operation of the inverter.
⇒ Refer to Section 11, Table of parameters.

5.1 History function

AUH : History function

• **Function**
Automatically searches for 5 latest parameters that are programmed with values different from the standard default setting and displays them in the AUH. Parameter setting can also be changed within this group AUH.
This function comes in very handy when you adjust the inverter repeatedly using the same parameter.

Note 1: If no history information is stored, this parameter is skipped and the next parameter AU1.
Note 2: HEAd and End are added respectively to the first and last parameters in a history of changes.

[Setting methods]

Key operated	LED display	Operation
	0.0	Displays the operation frequency (operation stopped). (When standard monitor display selection F710=0 [Output frequency])
MODE	AUH	The first basic parameter “History function (AUH)” is displayed.
ENT	ACC	The parameter that was set or changed last is displayed.
ENT	8.0	Press the ENTER key to display the set value.
△ ▽	5.0	Press the △ key and ▽ key to change set value.
ENT	5.0⇔ACC	Press the ENTER key to save the changed value. The parameter name and the programmed value will flash on and off alternately.
△ (▽)	****	Use the same steps as those given above to display parameters that you want to search for or change setting with the △ key and ▽ key.
△ (▽)	HEAd (End)	HEAd: First historic record End : Last historic record
MODE MODE MODE	Parameter display ↓ AUH ↓ Fr-F ↓ 0.0	Press the MODE key to return to the parameter setting mode AUH. After that you can press the MODE key to return to the status monitor mode or the standard monitor mode (display of operation frequency).

5.2 Setting acceleration/deceleration time

AU1 : Automatic acceleration/deceleration
ACC : Acceleration time 1
dEC : Deceleration time 1

- **Function**
  1) For acceleration time 1 ACC programs the time that it takes for the inverter output frequency to go from 0Hz to maximum frequency FH.
  2) For deceleration time 1 dEC programs the time that it takes for the inverter output frequency to got from maximum frequency FH to 0Hz.

5.2.1 Automatic acceleration/deceleration

This automatically adjusts acceleration and deceleration time in line with load size.

AU1 = 1

*** Adjusts the acceleration/deceleration time automatically within the range of 1/8 to 8 times as long as the time set with the ACC or dEC, depending on the current rating of the inverter.**

AU1 =2

*** Automatically adjusts speed during acceleration only. During deceleration, speed is not adjusted automatically but reduced at the rate set with dEC.**

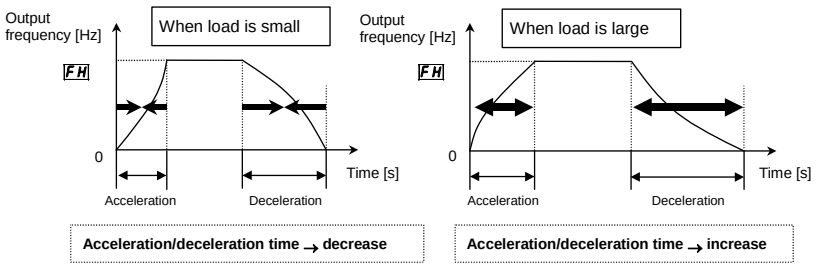

Set AU1 (automatic acceleration/deceleration) to 1 or 2.

[Parameter setting]

Title	Function	Adjustment range	Default setting
AU1	Automatic acceleration/deceleration	0:Disabled (Manual setting) 1:Automatic setting 2:Automatic setting (during acceleration only)	0

When automatically setting acceleration/deceleration time, always change the acceleration/deceleration time so that it conforms with the load.
The acceleration/deceleration time changes constantly with load fluctuations.
For inverters that requires a fixed acceleration/deceleration time, use the manual settings (ACC, dEC).
When using a braking resistor or braking unit, do not set the AU1= 1. Or the regenerative braking resistor may be overloaded.
Use this parameter after actually connecting the motor.
Setting acceleration/deceleration time (ACC, dEC) in conformance with mean load allows optimum setting that conforms to further changes in load.
When the inverter is used with a load that fluctuates considerably, it may fail to adjust the acceleration or deceleration time in time, and therefore may be tripped.

5.2.2 Manually setting acceleration/deceleration time

Set acceleration time from 0 (Hz) operation frequency to maximum frequency FH and deceleration time as the time when operation frequency goes from maximum frequency FH to 0 (Hz).

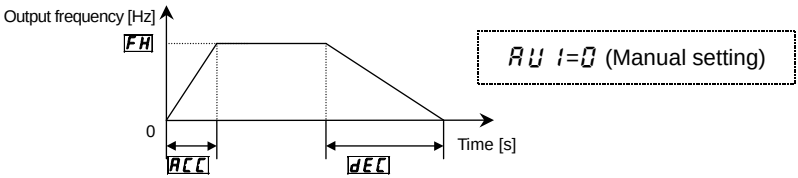

[Parameter setting]

Title	Function	Adjustment range	Default setting
ACC	Acceleration time 1	0.1[Note]~6000 sec.	According to model ⇒ Refer to page K-46.
dEC	Deceleration time 1	0.1[Note]~6000 sec.	According to model ⇒ Refer to page K-46.

Note: The minimum setting of acceleration and deceleration times have been set respectively at 0.1 sec. by default, but they can be changed within a range of 0.01 sec. (setting range:0.01~600.0 sec.) by changing the setting of the parameter tYP (default setting).
⇒ For details, refer to Section 5.20.

When running under not connect the motor at setting Pt=2,3,4,7,8, it might to not operate normally. ,It will be able to running normally by connecting the motor.

If the programmed value is shorter than the optimum acceleration/deceleration time determined by load conditions, overcurrent stall or overvoltage stall function may make the acceleration/deceleration time longer than the programmed time. If an even shorter acceleration/deceleration time is programmed, there may be an overcurrent trip or overvoltage trip for inverter protection.
⇒ For details, refer to Section 13.1.

5.3 Increasing starting torque

AU2 : Automatic torque boost

- **Function**

Simultaneously switches inverter output V/f control and programs motor constants automatically (auto-tuning function 1) to improve torque generated by the motor. This parameter integrates the setting of special V/f control selection such as automatic torque boost or vector control.

○ Constant torque characteristics (default setting)
○ Automatic torque boost+auto-tuning 1
○ Sensorless vector control 1+auto-tuning 1

Note: Square reduction torque control, sensor vector control (optional), etc. can be selected using the V/f control mode selection parameter Pt .
⇒ For details, refer to Section 5.6.

[Parameter setting]

Title	Function	Adjustment range	Default setting
AU2	Automatic torque boost	0: Disabled (Always 0 is displayed.) 1: Automatic torque boost+auto-tuning 1 2: Sensorless vector control 1+auto-tuning 1	0

Note: Parameter displays on the right always return to 0 after resetting. The previous setting is displayed on the left.
Ex. 10

1) Increasing torque automatically according to the load

Set the automatic torque boost AU2= 1 (automatic torque boost+auto-tuning 1)

Automatic torque boost AU2= 1 detects load current in all speed ranges and automatically adjusts voltage output from inverter. This gives steady torque for stable runs.

Note 1: The same characteristic can be obtained by setting the V/f control mode selection parameter Pt to 2 (automatic torque boost) and F400 (auto-tuning 1) to 2. ⇒ Refer to Section 6.22.
Note 2: Setting AU2 to 1 automatically programs Pt to 2.
Note 3: If stable operation cannot be achieved with this setting, set the parameters uL (base frequency), uLu (base-frequency voltage), F405 (rated capacity of motor), F406 (rated current of motor) and F407 (rated number of revolutions of motor) as specified on the motor nameplate, and then set F400 to 4 and AU2 to 1 again.

2) When using vector control (increasing starting torque and high-precision operations)

Set the automatic torque boost AU2=2 (sensorless vector control 1+auto-tuning 1)

Setting automatic torque boost AU2=2 (Sensorless vector control 1+auto-tuning 1) provides high starting torque bringing out the maximum in motor characteristics from the low-speed range. This suppresses changes in motor speed caused by fluctuations in load to provide high precision operation. This setting is most suitable for transfer and lifting systems that are operated in speed control mode.

Note 1: The same characteristic can be obtained by setting the V/f control mode selection parameter Pt to 3 (Sensorless vector control 1) and F400 (Auto-tuning 1) to 2. ⇒ Refer to Section 6.22.
Note 2: Setting AU2 to 2 automatically programs Pt to 3.
Note 3: If stable operation cannot be achieved with this setting, set the parameters uL (base frequency), uLu (base-frequency voltage), F405 (rated capacity of motor), F406 (rated current of motor) and F407 (rated number of revolutions of motor) as specified on the motor nameplate, and then set F400 to 4 and AU2 to 2 again.

5

If vector control cannot be programmed....

First read the precautions about vector control in 5.6, 9).
1) If the desired torque cannot be obtained ⇒ Refer to 6.22 selection 3.
2) If auto-tuning error "Etn" appears ⇒ Refer to 13.1 and 6.22 selection 3.

■ AU2 (automatic torque boost) and Pt (V/f control mode selection)

Automatic torque boost is the parameter for setting V/f control mode selection (Pt) and auto-tuning 1 (F400) together. That is why all parameters related to change automatically when AU2 is changed.

		Automatically programmed parameters		
AU2		Pt		F400
0	Disabled (Always 0 is displayed.)	–	Check the programmed value of Pt. (If AU 1 is not changed, it becomes 0 (V/f constant).)	–
1	Automatic torque boost+auto-tuning 1	2	Automatic torque boost	2: Executed (0 after execution)
2	Sensorless vector control 1+auto-tuning 1	3	Sensorless vector control 1	2: Executed (0 after execution)

3) Increasing torque manually (V/f constant control)

The VF-AS1 inverter is set to this control mode by factory default.

This is the setting of constant torque characteristics that are suited for such things as conveyors. It can also be used to manually increase starting torque.

To return to V/f constant control after changing the AU2 setting:

Set the V/f control mode selection parameter Pt =0 (constant torque characteristic).

⇒ Refer to Section 5.6.

Note: If you want to increase torque further, raise the setting value of manual torque boost ub.
How to set manual torque boost parameter ub ⇒ Refer to Section 5.7.

5.4 Setting parameters by operating method

AU4 : Automatic function setting

- **Function**
  Automatically programs all parameters (parameters described below) related to the functions by selecting the inverter's operating method.
  The major functions can be programmed simply.

[Parameter setting]

Title	Function	Adjustment range	Default setting
AU4	Automatic function setting	0:Disabled 1:Frequency setting by means of voltage 2:Frequency setting by means of current 3:Voltage/current switching from external terminal 4: Frequency setting on operation panel and operation by means of terminal 5: Frequency setting and operation on operation panel	0

Example: When setting the parameter "AU4=3", It will be the following indication.

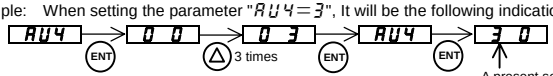

Automatically programmed functions and parameter set values

	Default setting	0:Disabled	1:Frequency setting by means of voltage	2:Frequency setting by means of current	3:Voltage/current switching from external terminal	4: Frequency setting on operation panel and operation by means of terminal	5: Frequency setting and operation on operation panel
CMOd	0:Terminal board	–	–	–	–	0:Terminal board	1:Operation panel
FMOd	2:RR/S4	–	2:RR/S4	1:VI/II	2:RR/S4	4:Operation panel	4:Operation panel
F108	0:Voltage input	–	–	1:Current input	1:Current input	–	–
F117 (S3)	14: Preset speed command 3	–	–	–	104:Frequency priority switching	–	–
F200	0:FMOd/ F207 terminal switching	–	0:FMOd/ F207terminal switching	0:FMOd/ F207terminal switching	0:FMOd/ F207terminal switching	0:FMOd/ F207terminal switching	0:FMOd/ F207terminal switching
F201	0 %	–	–	20 %	20 %	–	–
F207	1:VI/II	–	2:RR/S4	1:VI/II	1:VI/II	4:Operation panel	4:Operation panel

⇒ Refer to Section 11 for input terminal functions.

Disabled (AU4=0)

No change is made to the parameter setting.

Frequency setting by means of voltage: (AU4= 1)

Operation is performed by applying a voltage for setting the RR/S4 terminal 1 frequency.
When sink logic is selected:
ST-CC ON: Standby (ON (short-circuited) by default)
F-CC ON: Forward run
R-CC ON: Reverse run

Frequency setting by means of current

This setting is used to set the frequency by applying a current of 4-20mA to the VI/II terminal.
ST-CC ON: Standby (ON (short-circuited) by default)
F-CC ON: Forward run
R-CC ON: Reverse run

Voltage/current switching by means of an external terminal

Switching between remote and local (different frequency commands) can be performed by turning on or off the S3 terminal.
In that case, apply a voltage via the RR/S4 terminal and a current via the VI/II terminal.
S3-CC OFF: The frequency is set according to the voltage applied to the RR/S4 terminal.
S3-CC ON: The frequency is set according to the current applied to the VI/II terminal.
In sink logic mode: ST-CC ON: Standby (ON (short-circuited) by default), F-CC ON: Forward run, R-CC ON: Reverse run.

Frequency setting with operation panel and operation with terminal board

This setting is used to set the frequency using the operation panel and to perform operation control using the terminal board.

Use the ∧ and ∨ keys to set the frequency.

In sink logic mode: ST-CC ON: Standby (ON (short-circuited) by default),
F-CC ON: Forward run, R-CC ON: Reverse run.

Frequency setting and operation with operation panel:

This setting is used to set the frequency and to perform operation control, using the operation panel.

Use the ∧ and ∨ keys to set the frequency.

Use the RUN and STOP keys to perform operation control.

5.5 Selection of operation mode

5

CMOd : Command mode selection
FMOd : Frequency setting mode selection 1

• **Function**
These parameters are to program which command to the inverter (from operation panel, terminal board, remote input device or options) will be given priority in running/stopping the operation and in frequency setting (speed).

<Command mode selection>

[Parameter setting]

Title	Function	Adjustment range	Default setting
CMOd	Command mode selection	0:Terminal input enabled 1:Operation panel input enabled (including LED/LCD option input) 2:2-wire RS485 communication input 3:4-wire RS485 communication input 4:Communication option input	0

[Programmed value]

0: **Terminal board operation** — ON and OFF of an external signal Runs and stops operation.

1: **Operation panel operation** — Press the RUN and STOP keys on the operation panel to Run and stop a run. (including LED/LCD option input)

2: **2-wire RS485 communication operation** — Run and stop commands are entered from the 2-wire RS485 communications device. (Communication No.: FA00)

3: **4-wire RS485 communication operation** — Run and stop commands are entered from the 4-wire RS485 communications device. (Communication No.: FA04)

4: **Communication option input enabled** — Signals from an optional communication device are used to start and stop operation.
⇒ For details, refer to Instruction Manual (E6581281, E6581343, E6581288) specified in Section 6.42.

* There are two types of function: the function that conforms to commands selected by CMOd, and the function that conforms only to commands from the terminal board.
⇒ Refer to the table of input terminal function selection in Section 7.2.
* When priority is given to commands from a linked computer or terminal board, they have priority over the setting of CMOd.

<Frequency setting mode selection>

[Parameter setting]

Title	Function	Adjustment range	Default setting
FMOd	Frequency setting mode selection 1	1:VI/II (voltage/current input) 2:RR/S4 (potentiometer/voltage input) 3:RX (voltage input) 4:Operation panel input enabled (including LED/LCD option input) 5:2-wire RS485 communication input 6:4-wire RS485 communication input 7:Communication option input 8:Optional AI1 (differential current input) 9:Optional AI2 (voltage/current input) 10:Up/Down frequency 11:Optional RP pulse input 12:Optional high-speed pulse input 13: - [Note 1]	2

[Programmed value]

1: **VI/II input** Speed setting commands are entered by external signals (0~10Vdc or 4(0)~20mAdc).

2: **RR/S4 input** Speed setting commands are entered by external signals (RR/S4 terminal:0~10Vdc).

3: **RX input** Speed setting commands are entered by external signals (RX terminal:0~±10Vdc (±5Vdc)).

4: **Operation panel input** Press the ∧ and ∨ keys on the operation panel to set the frequency.
(including LED/LCD option input)

5: **2-wire RS485 communication operation** Speed commands are entered from the 2-wire RS485 communications device. (Communication No.:FA01)

6: **4-wire RS485 communication operation** Speed commands are entered from the 4-wire RS485 communications device.
(Communication No.:FA05)

7: **Communication option input enabled** Speed commands are entered from an optional communication device.
⇒ For details, refer to Instruction Manual (E6581281, E6581343, E6581288) specified in Section 6.42.

8: **AI1 input** Speed setting commands are entered by external signals (AI1 terminal (option): 0~±10Vdc (±5Vdc)).

9: **AI2 input** Speed setting commands are entered by external signals (AI2 terminal: 0~10Vdc or 4(0)~20mAdc) (optional).

10: **Up/Down frequency** Speed commands are entered by means of Up/Down frequency signals from the terminal board. ⇒ Refer to Section 7.2.

11: **RP pulse input** Speed commands are entered by means of RP pulses (optional).

12: **High-speed pulse input** Speed commands are entered by means of high-speed pulses (optional).

Note 1: For options (unsupported)

The functions assigned to the following control input terminals (contact input: ⇒ Refer to Section 7.2) are always activated regardless of the settings of the command mode selection CMOd and frequency setting mode selection 1 FMOd.

- Reset terminal (default setting: RES, valid only for tripping)
- Standby terminal (assigned to ST by default)
- Emergency stop terminal

To make changes in the command mode selection CMOd and the frequency setting mode selection 1 FMOd first stop the inverter temporarily.

No change can be made to them if the inverter is in operation.

■ Preset speed operation

CMOd: Set this parameter at 0 (terminal board).
FMOd: Any setting is valid.

1) Setting the run, stop and operation frequencies with the operation panel

Title	Function	Example of setting
CMOd	Command mode selection	1 (Operation panel input)
FMOd	Frequency setting mode selection 1	4 (Operation panel input)

Run/stop :Press the RUN and STOP keys on the operation panel

To switch between forward run and reverse run, use the forward/reverse run selection Fr.

Speed command :Press the ∧ and ∨ keys on the operation panel to set the frequency.

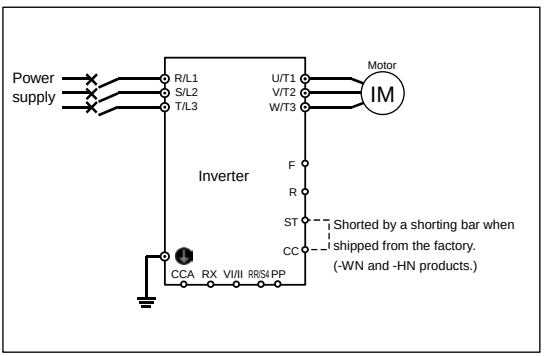

To save the frequency, press the ENTER key. Then, FC and the set frequency are displayed alternately for a while.

2) Setting the run and stop frequencies (forward run, reverse run and coast stop) by means of external signals and setting the operation frequency with the operation panel

Title	Function	Example of setting
CMOd	Command mode selection	0 (Terminal input)
FMOd	Frequency setting mode selection 1	4 (Operation panel input)

Run/stop: ON/OFF of terminals F-CC/R-CC
(Standby: connection of terminals ST and CC)

Speed command: Set the frequency, using the ∧ ∨ keys on the operation panel.

«Example of a connection diagram: SW1 set to sink logic»

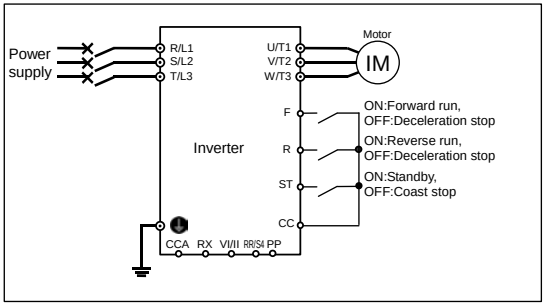

- The inverter is factory-configured so that, if F and R are turned on at the same time, the inverter will stop operation. If necessary, the direction of rotation can be reversed by changing parameter settings.
  ⇒ Refer to Section 6.2.1.
- To save the frequency, press the ENTER key. Then, FC and the set frequency are displayed alternately for a while.

3) Setting the run and stop frequencies (forward run, reverse run and deceleration stop) with the operation panel and setting the operation frequency by means of external signals

Title	Function	Example of setting
CMOd	Command mode selection	1 (Operation panel input)
FMOd	Frequency setting mode selection 1	1 (VI/II (voltage/current input)) 2 (RR/S4 (potentiometer/ voltage input)) 3 (RX (voltage input))

Run/stop: Press the RUN and STOP keys on the operation panel

To switch between forward run and reverse run, use the forward/reverse run selection Fr.

Speed command: External signal input

(1) VI/II terminal: 0~+10Vdc (0~+5Vdc) or 4(0)~20mAdc

(2) RR/S4 terminal: Potentiometer 0~+10Vdc (0~+5Vdc)

(3) RX terminal: 0~±10Vdc (0~±5Vdc)

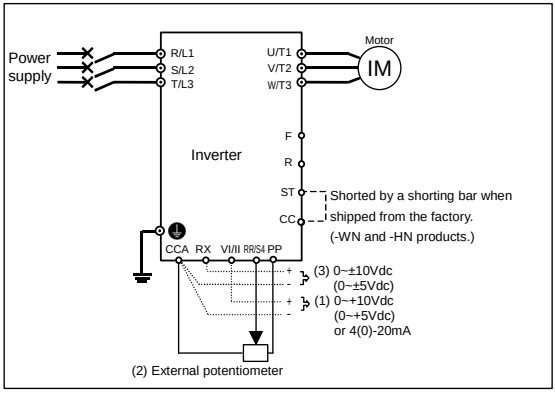

* Other speed setting
- 5: 2-wire RS485 input
- 6: 4-wire RS485 input enabled
- 7: Communication option input enabled *
- 8: Optional AI1 (differential current input) *
- 9: Optional AI2 (voltage/current input) *
- 10: Up/Down frequency
- 11: RP pulse input *
- 12: High-speed pulse input *
- 13: -

* Commands marked with * are optional. Refer to Instruction Manual of options described in Section 10.

4) Setting the run, stop and operation frequencies (forward run, reverse run and coast stop) by means of external signals (default setting)

Title	Function	Example of setting
CMOd	Command mode selection	0:(Terminal input)
FMOd	Frequency setting mode selection 1	1(VI/II (voltage/current input)) 2(RR/S4 (potentiometer/voltage input)) 3(RX (voltage input))

Run/stop :ON/OFF of terminals F-CC/R-CC
Speed command :External signal input
(1) VI/II terminal: 0~+10Vdc
(0~+5Vdc) or
4(0)~20mAdc
(2) RR/S4 terminal: Potentiometer
0~+10Vdc (0~+5Vdc)
(3) RX terminal: 0~±10Vdc (0~±5Vdc)

«Example of a connection diagram: SW1 set to sink logic»

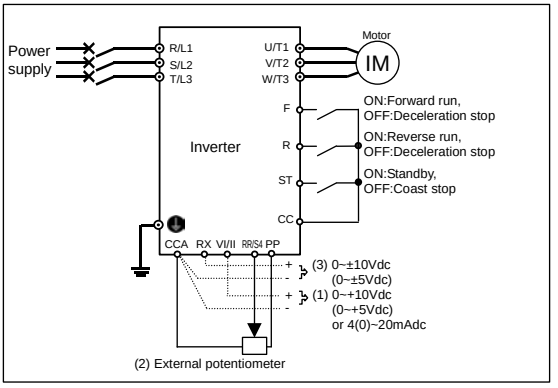

The inverter is factory-configured so that, if F and R are turned on at the same time, the inverter will stop operation. If necessary, the direction of rotation can be reversed by changing parameter settings.
⇒ Refer to Section 6.2.1.

* Other speed setting
5: 2-wire RS485 input
6: 4-wire RS485 input enabled
7: Communication option input enabled *
8: Optional AI1 (Differential current input) *
9: Optional AI2 (voltage/current input) *
10: Up/Down frequency
11: RP pulse input *
12: High-speed pulse input *
13: -
* Commands marked with * are optional. Refer to Instruction Manual of options described in Section 10.

5.6 Selecting control mode

Pt : V/f control mode selection

• **Function**

With "VF-AS1," the V/f controls shown below can be selected.

0: Constant torque characteristics
1: Voltage decrease curve
2: Automatic torque boost (*1)
3: Sensorless vector control 1 (*1)
4: Sensorless vector control 2
5: V/f 5-point setting
6: PM control (*2)
7: PG feedback control (*3)
8: PG feedback vector control (*3)

(*1) "Automatic control" parameter automatically sets this parameter and auto-tuning 1 at a time.
(*2) Use a dedicated motor with permanent magnets.
(*3) A PG feedback device (optional) is needed for this control.

[Parameter setting]

Title	Function	Adjustment range	Default setting
Pt	V/f control mode selection	0: Constant torque characteristics 1: Voltage decrease curve 2: Automatic torque boost 3: Sensorless vector control 1 4: Sensorless vector control 2 5: V/f 5-point setting 6: PM control 7: PG feedback control 8: PG feedback vector control	0

⚠ Caution

Mandatory

• When operating the inverter with Pt set to 2, 3, 4, 7 or 8, be sure to set the motor constant parameter correctly. Failure to do this may cause the inverter not to control the motor properly, and thus cause the motor not to deliver the desired performance. For more information, see the explanation of each Pt setting in the following sections.

1) Constant torque characteristics (Normal way of use)

Setting of V/f control mode selection Pt=0 (Constant torque characteristics)

This is applied to loads with equipment like conveyors and cranes that require the same torque at low speeds as at rated speeds.

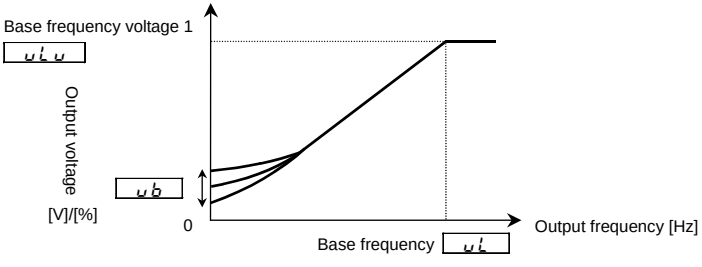

* To increase the torque further, increase the setting value of the manual torque boost parameter vb.
⇒ For more details, refer to Section 5.7.

2) Decreasing output voltage

Setting of V/f control mode selection Pt = 1 (Voltage decrease curve)

This is appropriate for load characteristics of such things as fans, pumps and blowers in which the torque in relation to load rotation speed is proportional to its square.

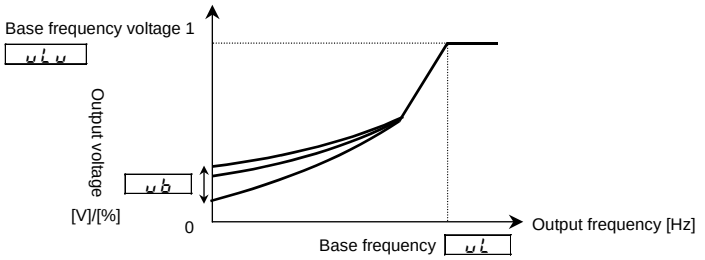

3) Increasing starting torque

Setting of V/f control mode selection Pt =2 (Automatic torque boost)

Detects load current in all speed ranges and automatically adjusts voltage output (torque boost) from inverter. This gives steady torque for stable runs.

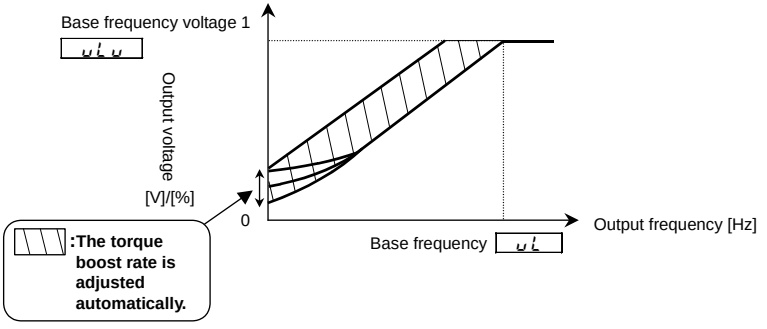

Note: This control system can oscillate and destabilize runs depending on the load. If that should happen, set V/f control mode selection Pt to 0 (Constant torque characteristics) and increase torque manually.

Motor constant must be set.

The motor constant can be set in any of the following two ways:

1) Automatic setting

Enter the following information that is indicated on the motor nameplate, and then execute the auto-tuning 1 command (Set F400 to 4, and then reset F400 to 2.).

<Information indicated on motor nameplate>

uL (Base frequency), uLu (Base frequency voltage), F405 (Motor rated capacity), F406 (Motor rated current), F407(Motor rated rotational speed)

⇒ Refer to 6.22 selection 2.

2) Manual setting

Set each motor constant manually.

⇒ Refer to 6.22 selection 3.

4) Vector control–increasing starting torque and achieving high-precision operation.

Setting of V/f control mode selection Pt=3, 4 (Sensorless vector control 1, 2)

Using sensorless vector control with a Toshiba standard motor will provide the highest torque at the lowest speed ranges. The effects obtained through the use of sensorless vector control are described below.

(1) Provides large starting torque.
(2) Effective when stable operation is required to move smoothly up from the lowest speeds.
(3) Effective in elimination of load fluctuations caused by motor slippage.
(4) Effective in producing high motor torque at low speed.

Set Pt to 3 (sensorless vector control 1) to operate multiple motors of the same type in parallel or to operate a motor with a two or more notches lower rating.
To perform torque control, set Pt to 4 (sensorless vector control 2), which is designed to perform operation control with higher accuracy. In that case, however, the inverter should be used only for operating a single motor with an equal or one notch lower rating.

Motor constant must be set.

The motor constant can be set in any of the following two ways:

1) Automatic setting
Enter the following information that is indicated on the motor nameplate, and then execute the auto-tuning 1 command (Set F400 to 4, and then reset F400 to 2.).
<Information indicated on motor nameplate>
uL (Base frequency), uLu (Base frequency voltage), F405 (Motor rated capacity), F406 (Motor rated current), F407(Motor rated rotational speed)
⇒ Refer to 6.22 selection 2.

2) Manual setting
Set each motor constant manually.
⇒ Refer to 6.22 selection 3.

5) Setting of V/f characteristic arbitrarily

Setting of V/f control mode selection Pt=5 (V/f 5-point setting)

In this mode, the base frequency and the base frequency voltage for the V/f control need to be set to operate the motor while switching a maximum of 5 different V/f characteristics.

[Parameter setting]

Title	Function	Adjustment range	Default setting
F190	V/f 5-point setting VF1 frequency	0.0~FH Hz	0.0
F191	V/f 5-point setting VF1 voltage	0.0~100 % *	0.0
F192	V/f 5-point setting VF2 frequency	0.0~FH Hz	0.0
F193	V/f 5-point setting VF2 voltage	0.0~100 % *	0.0
F194	V/f 5-point setting VF3 frequency	0.0~FH Hz	0.0
F195	V/f 5-point setting VF3 voltage	0.0~100 % *	0.0
F196	V/f 5-point setting VF4 frequency	0.0~FH Hz	0.0
F197	V/f 5-point setting VF4 voltage	0.0~100 % *	0.0
F198	V/f 5-point setting VF5 frequency	0.0~FH Hz	0.0
F199	V/f 5-point setting VF5 voltage	0.0~100 % *	0.0

*100% adjustment value (200V class: 200V, 400V class: 400V)

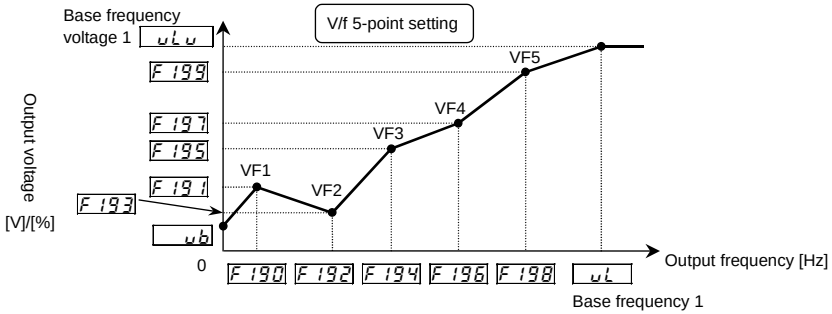

Note 1: Restrict the amount of torque to boost (ub) to 3% or so. Boosting the torque too much may impair the linearity between points.

Note 2: If the V/f 5-point is set within the diagonally shaded area in the figure below, the V/f 5-point is placed automatically on the boundary line (heavy line in the figure).

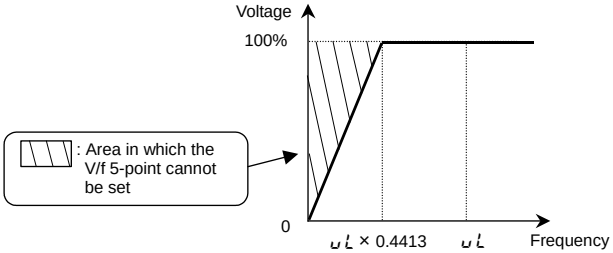

6) Operating a permanent magnet motor

Setting of V/f control mode selection Pt =6 (PM control)

Permanent magnet motors (PM motors) that are light, small in size and highly efficient, as compared to induction motors, can be operated in sensorless operation mode. Note that this feature can be used only for specific motors. For more information, contact your supplier.

7) Operating the motor at periodic speeds by means of a motor speed sensor

Setting for V/f control mode selection Pt = 7 (PG feedback contro)

Set Pt to 3 to operate the motor at periodic speeds.

A PG feedback device (optional) is needed. In addition, a motor with a speed sensor (encoder) should be used.

Use this setting when operating a motor two or more ranks lower in capacity than the inverter at periodic speeds.

Note that the accuracy obtained by Pt = 7 is lower than that obtained by setting Pt to 8. Also, Pt should be set to 8 to perform torque control. Pt cannot be set to 7 in such a case.

Output torque decreases considerably in regenerative low speed operation (motor slip frequency or less). Set Pt to 8 if regenerative low speed torque is necessary.

Motor constant must be set.

The motor constant can be set in any of the following two ways:

1) Automatic setting

Enter the following information that is indicated on the motor nameplate, and then execute the auto-tuning 1 command (Set F400 to 4, and then reset F400 to 2.).

<Information indicated on motor nameplate>

uL (Base frequency), uLu (Base frequency voltage), F405 (Motor rated capacity), F406 (Motor rated current), F407(Motor rated rotational speed) ⇒ Refer to 6.22 selection 2.

2) Manual setting

Set each motor constant manually. ⇒ Refer to 6.22 selection 3.

8) Performing speed control/torque control with high accuracy using the motor speed sensor

Setting for V/f control mode selection Pt=8 (PG feedback vector control)

The torque produced by the motor is controlled by means of specified torque command signals. The rotational speed of the motor depends on the relation between the load torque and the torque produced by the motor.
A PG feedback device (optional) is needed. In addition, a motor with a speed sensor (encoder) should be used.
Set Pt to 8 (PG feedback vector control) to perform speed/torque control with high accuracy.

Motor constant must be set.

The motor constant can be set in any of the following two ways:

1) Automatic setting
   Enter the following information that is indicated on the motor nameplate, and then execute the auto-tuning 1 command (Set F400 to 4, and then reset F400 to 2.).
   <Information indicated on motor nameplate>
   uL (Base frequency), uLu (Base frequency voltage), F405 (Motor rated capacity), F406 (Motor rated current), F407(Motor rated rotational speed)
   ⇒ Refer to 6.22 selection 2.
2) Manual setting
   Set each motor constant manually.
   ⇒ Refer to 6.22 selection 3.

9) Precautions on automatic torque boost mode or vector control

1) When operating a motor in automatic torque boost mode or vector control mode (Pt = 2, 3, 4, 7 or 8), enter each motor constant indicated on the nameplate (uL (base frequency), uLu (base-frequency voltage), F405 (rated capacity of motor), F406 (rated current of motor) and F407 (rated number of revolutions of motor)), read the precautions on auto-tuning 1 on section 6.22 (1), and then set F400 to 2 (auto-tuning). If the cable length is in excess of 30m, be sure to perform the auto-tuning (F400=2) mentioned above, even when using a standard motor recommended by Toshiba.
2) The sensorless vector control exerts its characteristics effectively in frequency areas below the base frequency (uL). The same characteristics will not be obtained in areas above the base frequency.
3) When setting Pt to 4 or 8, use the inverter along with a general-purpose motor with an equal or one notch lower rating.
4) Use a motor that has 2 to 16P.
5) Always operate the motor in single operation (one inverter to one motor). (Except for; Pt=3) Sensorless vector control cannot be used when one inverter is operated with more than one motor.
6) The torque produced by the motor decreases more or less around the rated frequency because of a voltage drop cause motor-generated torque in the vicinity of rated frequency to be somewhat lower.
7) Connecting a reactor or surge voltage suppression filter between the inverter and the motor may reduce motor-generated torque. Setting auto-tuning 1 may also cause a trip (Etn, Etn 1~3)rendering sensorless vector control unusable. In the event of a trip, perform auto-tuning with the inverter connected directly to the motor, or enter the motor constant calculated from the motor test results.
8) Connect speed sensor for vector control with sensor to the motor. Connecting via gear, etc. causes motor's oscillating or inverter's trip by lack of rigidity.
9) If running under not connect the motor, please set to Pt=0 temporarily. There is a possibility not to operate normally when running at setting Pt=2,3,4,7,8 under not connect the motor.

5.7 Manual torque boost–increasing torque boost at low speeds

ub : Manual torque boost 1

• **Function**
If torque is inadequate at low speeds, increase torque by raising the torque boost rate with this parameter.

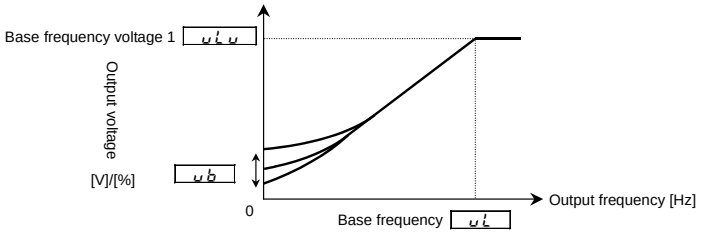

[Parameter setting]

Title	Function	Adjustment range	Default setting
ub	Manual torque boost 1	0.0~30.0 %	According to model ⇒ Refer to page K-46.

This parameter is valid when Pt=0 (Constant torque characteristics), 1 (square reduction torque), 5 (V/f 5-point setting).

Note: The optimum value is programmed for each inverter capacity. Boosting torque excessively may cause the inverter to trip because of an overcurrent. If operation is repeated with torque boosted excessively, electronic devices in the main circuit may be damaged, so if high starting torque is needed, it is recommendable to use vector control.
⇒ Refer to 5.6 selection 3) and 4).
If necessary, set the amount of torque to be boosted, as a guide, within +2% of the factory default setting.

5.8 Base frequency

uL : Base frequency 1
uLu : Base frequency voltage 1

• **Function**
Sets the base frequency and the base frequency voltage in conformance with load specifications or the motor's rated frequency.

Note: This is an important parameter that determines the constant torque control area.

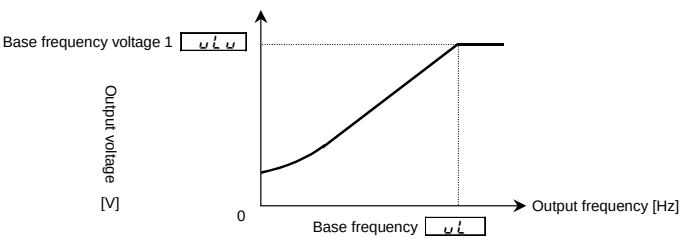

[Parameter setting]

Title	Function	Adjustment range	Default setting
uL	Base frequency 1	25.0~500.0 Hz	Inverter with a model number ending with -WN, HN: 60.0 -WP: 50.0
uLu	Base frequency voltage 1	200V class: 50~330 V 400V class: 50~660 V	200V models: 230 400V models: Inverter with a model number ending with -WN, HN: 460 -WP: 400

Note: The output frequency is limited to a frequency 10.5 times as high as the base frequency (uL). Even if the maximum frequency (FH) or the upper limit frequency (UL) is set above this frequency, this limitation is imposed on the output frequency.

5.9 Maximum frequency

FH : Maximum frequency

• **Function**
1) Programs the range of frequencies output by the inverter (maximum output values).
2) This frequency is used as the reference for acceleration/deceleration time.

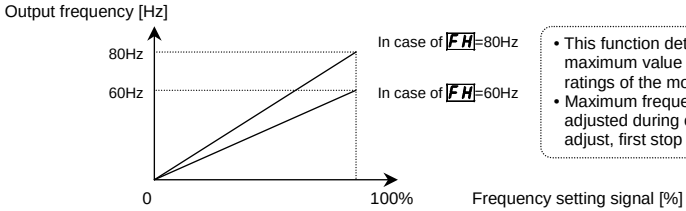

• This function determines the maximum value in line with the ratings of the motor and load.
• Maximum frequency cannot be adjusted during operation. To adjust, first stop the inverter.

If FH is increased, adjust the upper limit frequency UL as necessary.

[Parameter setting]

Title	Function	Adjustment range	Default setting
FH	Maximum frequency	30.0~500.0 Hz	80.0

Note: The output frequency is limited to a frequency 10.5 times as high as the base frequency (uL). Even if the maximum frequency (FH) or the upper limit frequency (UL) is set above this frequency, this limitation is imposed on the output frequency.

5

5.10 Upper limit and lower limit frequencies

UL : Upper limit frequency
LL : Lower limit frequency

• **Function**
Programs the lower limit frequency that determines the lower limit of the output frequency and the upper limit frequency that determines the upper limit of that frequency.

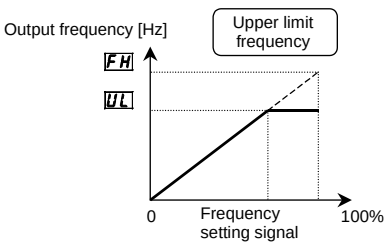

Frequencies that go higher than UL will not be output.

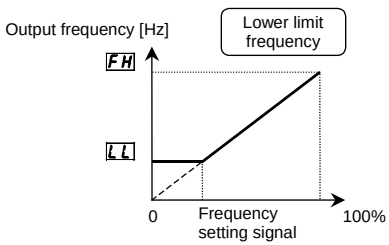

The output frequency cannot be set at less than LL.

[Parameter setting]

Title	Function	Adjustment range	Default setting
UL	Upper limit frequency	0.0~FH Hz	Inverter with a model number ending with -WN, HN: 60.0 -WP: 50.0
LL	Lower limit frequency	0.0~UL Hz	0.0

Note: The output frequency is limited to a frequency 10.5 times as high as the base frequency (uL). Even if the maximum frequency (FH) or the upper limit frequency (UL) is set above this frequency, this limitation is imposed on the output frequency.

5.11 Setting frequency command characteristics

F201~F203, A1F2 : VI/II point setting
F210~F212, AuF2 : RR/S4 point setting
F216~F219 : RX point setting
F222~F225 :
F228~F231 :
F234~F237 :
} It sets up, when using the optional circuit board.
F811~F814 : Point 1, 2 setting/ frequency

⇒ For details, refer to Section 7.3.

• **Function**
These parameters adjust the output frequency according to the externally applied analog signal (0~10Vdc voltage, 4(0)~20mAdc current) and the entered command for setting an external contact frequency.

5.12 Preset speed operation (speeds in 15 steps)

Sr1~Sr7 : Preset speed operation frequencies 1~7
F287~F294 : Preset speed operation frequencies 8~15
F560~F575 : Preset speed operation frequencies 1~15 operation mode

• **Function**
A maximum of 15 speed steps can be selected just by switching an external contact signal. Preset speed frequencies can be programmed anywhere from the lower limit frequency LL to the upper limit frequency UL.

[Setting methods]
1) Run/stop
Run and stop control is experienced by the operation panel (Default setting).

Title	Function	Adjustment range	Example of setting
CMOd	Command mode selection	0: Terminal input enabled 1: Operation panel input enabled (including LED/LCD option input) 2: 2-wire RS485 communication input 3: 4-wire RS485 communication input 4: Communication option input	0

Note 1: If speed commands (analog signal or digital input) are switched in line with preset speed operations, select the terminal board using the frequency setting mode selection 1 FMOd.
⇒ Refer to 3) or Section 5.5.

2) Preset speed frequency setting
Set the speed (frequency) of the number of steps necessary.

Setting from speed 1 to speed 7

Title	Function	Adjustment range	Default setting
Sr1~Sr7	Preset speed operation frequencies 1~7	LL~UL	0.0

Setting from speed 8 to speed 15

Title	Function	Adjustment range	Default setting
F287~F294	Preset speed operation frequencies 8~15	LL~UL	0.0

Example of preset speed contact input signal: SW1 set to sink logic

○: ON –: OFF (Speed commands other than preset speed commands are valid when all are OFF)

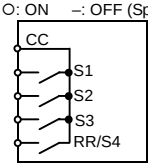

Terminal	Preset speed														
	1	2	3	4	5	6	7	8	9	10	11	12	13	14	15
S1-CC	○	–	○	–	○	–	○	–	○	–	○	–	○	–	○
S2-CC	–	○	○	–	–	○	○	–	–	○	○	–	–	○	○
S3-CC	–	–	–	○	○	○	○	–	–	–	–	○	○	○	○
RR/S4-CC	–	–	–	–	–	–	–	○	○	○	○	○	○	○	○

Terminal functions are as follows. (Default setting)

Terminal S1 ····· Input terminal function selection 5 (S1) F115= 10 (S1)
Terminal S2 ····· Input terminal function selection 6 (S2) F116= 12 (S2)
Terminal S3 ····· Input terminal function selection 7 (S3) F117= 14 (S3)
Terminal RR/S4 ····· Input terminal function selection 8 (S4) F118= 16 (S4)

The RR/S4 terminal is set by default as an analog voltage input terminal. To use it as an input terminal for preset speed operation, turn the SW3 switch to the S4 position.

[An example of the connection of terminals] (SW1 set to sink logic)

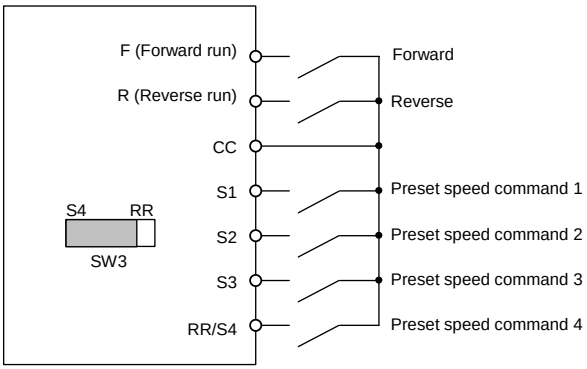

3) Using other speed commands with preset speed command

When no preset speed command is issued, the inverter accepts an input command from the operation panel or another analog input device.

Preset speed command	Other speed commands			
	Frequency setting signals from the operation panel		Analog signal input command (VI/II, RR/S4, RX, AI1 and AI2)	
	Entered	Not entered	Entered	Not entered
Entered	Preset speed command valid	Preset speed command valid	Preset speed command valid	Preset speed command valid
Not painted	Operation panel command valid	–	Analog signal valid	–

The preset speed command is always given priority when other speed commands are input at the same time. To use the RR/S4 terminal as an analog input terminal, turn the SW4 switch to the RR position. Note that this makes it impossible to use the function assigned to S4.

Below is an example of 7-step speed operation.

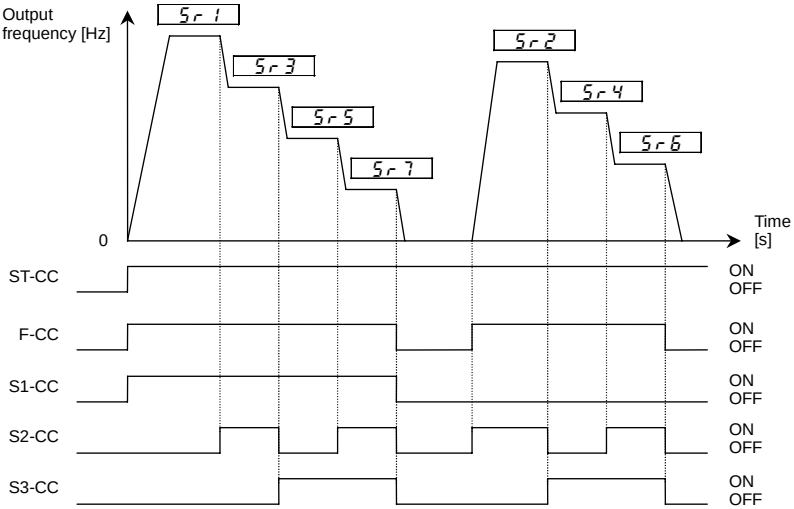

Example of 7-step speed operation

4) Setting the operation mode

An operation mode can be selected for each preset speed.

Operation mode setting

Title	Function	Adjustment range	Example of setting
F560	Preset speed operation mode selection	0: Preset speed operation with no mode 1: Preset speed operation with mode	0

0: Preset speed operation with no mode ····· Only frequency commands are governed by the preset speed command (1 to 15) entered.

1: Preset speed operation with mode ····· The direction of rotation, the V/f control mode, the acceleration and deceleration times and the torque limit can be set individually for each preset speed command.

If you selected "enabled" (F560= 1), the motor runs operation mode setting directions as below without following terminal F, R.

Operation mode setting

Title	Function	Adjustment range	Example of setting
F561~F575	Preset speed operation frequency 1~15 operation mode	0: Forward run + 1: Reverse run +2: Acceleration/deceleration switching signal 1 +4: Acceleration/deceleration switching signal 2 +8: V/f switching signal 1 + 16: V/f switching signal 2 +32: Torque limit switching signal 1 +64: Torque limit switching signal 2	0

For the settings marked with +, more than one function can be selected at the same time by entering the sum of the numbers of the desired functions.

Ex.) (+ 1) + (+2) = 3

By entering "3", you can activate the reverse run function and the acceleration/deceleration switching signal 1 function at the same time.

5.13 Selecting forward and reverse runs (operation panel only)

Fr : Forward/reverse run selection

• **Function**
Program the direction of rotation of the motor when the running and stopping are made using the RUN key and STOP key on the operation panel.
Valid when CMOd (command mode selection) = 1 (operation panel input).

[Parameter setting]

Title	Function	Adjustment range	Default setting
Fr	Forward/reverse run selection	0: Forward run 1: Reverse run 2: Forward run (F/R switching possible) 3: Reverse run (F/R switching possible)	0

Check the direction of rotation on the status monitor.
Fr-F: Forward run Fr-r: Reverse run
⇒ For monitoring, refer to Section 8.1.

When the F and R terminals are used for switching between forward run and stop from the terminal board, the Fr forward/reverse run selection parameter is rendered invalid.
Short across the F-CC terminals: forward run
Short across the R-CC terminals: reverse run

If F and CC, as well as R and CC are connected at the same time: Stop (Default setting)
Use the parameter F105 to select between reverse run and stop in this case.
⇒ For more details, refer to Section 6.2.1.

This function is valid only when CMOd is set at 1 (Operation panel input enabled).

To switch between forward run and reverse run from the control panel with parameter Fr set to 2 or 3, perform these steps: to switch to forward run, press the ∧ key while holding the ENT key down, or to switch to reverse run, press the ∨ key while holding ENT key down.

5.14 Setting the electronic thermal

tHr : Motor electronic thermal protection level 1
OLn : Electronic thermal protection characteristic selection
F606 : OL reduction starting frequency
F607 : Motor 150%-overload time limit
F631 : Temperature detection

• **Function**
This parameter allows selection of the appropriate electronic thermal protection characteristics according to the particular rating and characteristics of the motor.

[Parameter setting]

Title	Function	Adjustment range				Default setting
tHr	Motor electronic thermal protection level 1	10~100 %				100
OLn	Electronic thermal protection characteristic selection	Default setting	Motor type	Overload protection	Overload stall	0
		0	Standard Motor	○ (protect)	× (not stall)	
		1		○ (protect)	○ (stall)	
		2		× (not protect)	× (not stall)	
		3		× (not protect)	○ (stall)	
		4	VF Motor (special motor)	○ (protect)	× (not stall)	
		5		○ (protect)	○ (stall)	
		6		× (not protect)	× (not stall)	
		7		× (not protect)	○ (stall)	

1) Setting the motor electronic thermal protection level 1 tHr and electronic thermal protection characteristics selection OLn

The electronic thermal protection characteristics selection OLn is used to enable or disable the motor overload trip function (OL2) and the overload stall function.
The motor overload trip function (OL2) needs to be selected with the parameter OLn, while the inverter overload trip function (OL1) is always activated.

Explanation of terms:
Overload stall (Soft stall)
The function of automatically lowering the output frequency before the motor overload trip function OL2 is activated when the inverter detects that an excessive load is applied to the motor. (Lowers maximum about 48Hz when basic frequency is 60Hz.) This function enables the inverter to output a frequency commensurate with the load current so that the motor can keep running without tripping. This function is useful for such loads as fans, pump, and blowers, which have the square reduction torque characteristic that the current passed decreases as the rotating speed falls.

Note: Do not use this overload stall function for loads with a constant torque characteristic (e.g., a belt conveyer to which a constant load current is always passed regardless of their speed).

[Using standard motors (other than motors intended for use with inverters)]

When a motor is used in the lower frequency range than the rated frequency, that will decrease the cooling effects for the motor. This speeds up the start of overload detection operations when a standard motor is used in order to prevent overheating.

■ **Setting of electronic thermal protection characteristics selection OLn**

Default setting	Overload protection	Overload stall
0	○ (protect)	× (not stall)
1	○ (protect)	○ (stall)
2	× (not protect)	× (not stall)
3	× (not protect)	○ (stall)

■ Setting of motor electronic thermal protection level 1 [tHr]

If the capacity of the motor is smaller than the capacity of the inverter, or the rated current of the motor is smaller than the rated current of the inverter, adjust the electronic thermal protection level 1 tHr so that it fits the motor's rated current.

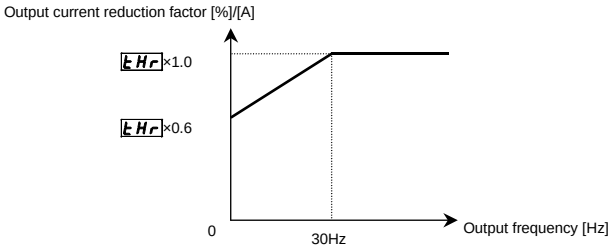

Note: The motor overload starting level is fixed at 30Hz. If necessary, set OLM to 4, 5, 6 or 7. (See the following section.) Even if the inverter is used with a Toshiba standard motor, the load may need to be reduced at frequencies of 30Hz and below in some cases. In such cases, set OLn to 4, 5, 6 or 7 and set the OL reduction starting frequency (F606) according to the motor.

[Example of setting: When the VFAS1-2007PL is running with a 0.4kW motor having 2A rated current]

Key operated	LED display	Operation
	0.0	Displays the operation frequency. (Perform during operation stopped.) (When standard monitor display selection F710=0 [Output frequency])
MODE	AUH	The first basic parameter "History function (AUH)" is displayed.
∧ ∨	tHr	Press either the △ key or the ▽ key to change the parameter to tHr.
ENT	100	Press the ENTER key to display the parameter setting (Default setting: 100%).
∧	40	Press the △ key to change the parameter to 40 (= motor rated current/inverter output rated current x 100 = 2.0/5.0 × 100)
ENT	40⇔tHr	Press the ENTER key to save the changed parameter. tHr and the parameter are displayed alternately.

[Using a VF motor (motor for use with inverter)]

■ Setting of electronic thermal protection characteristics selection OLM

Default setting	Overload protection	Overload stall
4	○ (protect)	× (not stall)
5	○ (protect)	○ (stall)
6	× (not protect)	× (not stall)
7	× (not protect)	○ (stall)

A VF motor (a motor for use with an inverter) can be used in lower frequency ranges than the standard motor, but if that frequency is extremely low, the effects of cooling on the motor will deteriorate.

In such a case, set the OL reduction start frequency parameter F606 according to the characteristics of the motor. (Refer to the figure below.)

As a guide, it is advisable to set this parameter around the default value (VF motor 6Hz).

[Parameter setting]

Title	Function	Adjustment range	Default setting
F606	OL reduction starting frequency	0.0~60.0 Hz	6.0

Note: F606 is enabled when OLM=4~7.

■ Setting of motor electronic thermal protection level 1 [tHr]

If the capacity of the motor is smaller than the capacity of the inverter, or the rated current of the motor is smaller than the rated current of the inverter, adjust the electronic thermal protection level 1 tHr so that it fits the motor's rated current.

* If the indications are in percentages[%], then 100% equals the inverter's rated output current [A].

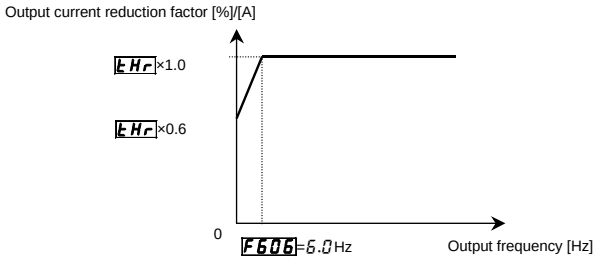

Setting the motor overload starting level

2) Motor 150%-overload time limit [F607]

The motor 150%-overload time limit parameter F607 is used to set the time elapsed before the motor trips under a load of 150% (overload trip OL2) within a range of 10 to 2400 sec.

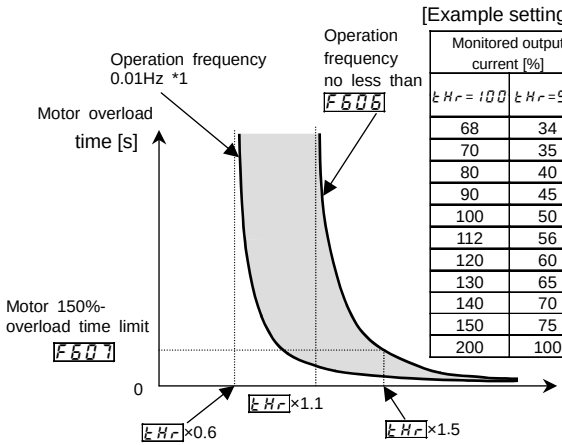

[Example setting]

Monitored output current [%]		Motor overload time [s] (Outline data)			
		F607=600		F607=300	
tHr=100	tHr=50	F606 ≦	0.01Hz	F606 ≦	0.01Hz
68	34	–	7200	–	3600
70	35	–	3600	–	1800
80	40	–	1000	–	500
90	45	–	600	–	300
100	50	–	420	–	210
112	56	12000	310	6000	155
120	60	2400	270	1200	135
130	65	1200	230	600	115
140	70	800	190	400	95
150	75	600	170	300	85
200	100	270	110	135	55

*1 Except for the cases of F606=0.0 1 [Hz]

Motor overload protection characteristics

[Parameter setting]

Title	Function	Adjustment range	Default setting
F607	Motor 150%-overload time limit	10~2400 sec.	300

3) Inverter overload characteristics

Set to protect the inverter unit. Cannot be turned off by parameter setting.

The inverter has two overload detecting functions, which can be switched from one to another using parameter F631 (temperature detection).

[Parameter setting]

Title	Function	Adjustment range	Default setting
F631	Temperature detection	0:Standard (150%-60 sec.) 1: Estimation of temperature	0

If the inverter overload trip function (OL1) is activated frequently, this can be improved by adjusting the stall operation level F601 downward or increasing the acceleration time ACC or deceleration time dEC.

■ F631=0 (Standard)

Protection is given uniformly regardless of ambient temperature, as shown by the 150%-60 sec overload curve in the figure below.

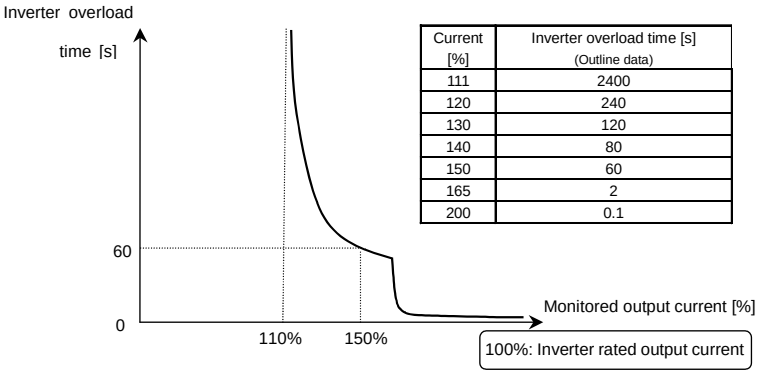

Current [%]	Inverter overload time [s] (Outline data)
111	2400
120	240
130	120
140	80
150	60
165	2
200	0.1

Inverter overload protection characteristics

■ F631=1 (Estimation of temperature)

This parameter adjusts automatically overload protection, predicting the inverter internal temperature rise. (diagonally shaded area in the figure below)

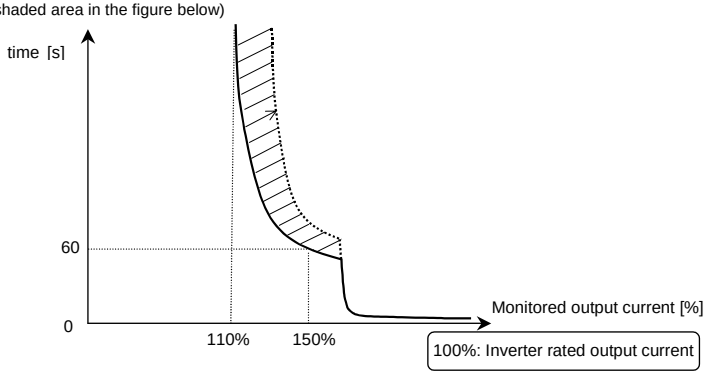

Inverter overload protection characteristics

Note 1: If the load applied to the inverter exceeds 150% of its rated load or the operation frequency is less than 0.1Hz, the inverter may trip (OL1 or OC1P~OC3P) in a shorter time.

Note 2: The inverter is factory-set so that, if the inverter becomes overloaded, it will automatically reduce the carrier frequency to avoid an overload trip (OL1 or OC1P~OC3P). A reduction in carrier frequency causes an increase in noise from the motor, but this does not affect the performance of the inverter. If you do not want the inverter to reduce the carrier frequency automatically, set the parameter F316=0.

Note 3: Overload detection level is variable by condition of output frequency and carrier frequency.

5.15 Changing the display unit % to A (ampere)/V (volt)

dSPU : Current/voltage unit selection

• **Function**

These parameters are used to change the unit of monitor display.

% ⇔A (ampere)/V (volt)

Current 100% = Inverter's rated current

200V-class voltage 100% = 200Vac

400V-class voltage 100% = 400Vac

■ Example of setting

During the operation of the VFAS1-2037PL (rated current 16.6A) at the rated load (100% load), units are displayed as follows:

1) Display in percentage terms

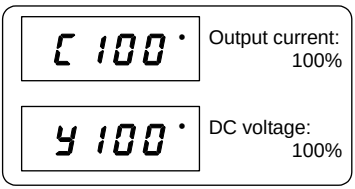

2) Display in amperes/volts

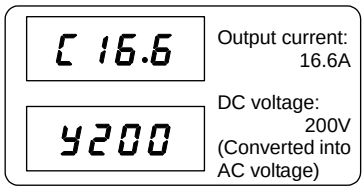

[Parameter setting]

Title	Function	Adjustment range	Default setting
dSPU	Current/voltage unit selection	0: % 1 : % → A (ampere)/V (volt)	0

* The dSPU converts the following parameter settings:

• A display Current monitor display

Setting of electronic thermal protection level 1/2/3/4 tHr, F173, F177, F181, F611 F640

DC braking current F251

Stall prevention level F601

• V display Voltage monitor display

V/f 5-point setting F191, F193, F195, F197, F199

Note: Base frequency voltage 1~4 (uLu, F171, F175, F179) is always displayed in the unit of V.

5.16 Meter setting and adjustment

FMSL	: FM terminal meter selection	F684	: FM output filter
FM	: FM terminal meter adjustment	AMSL	: AM terminal meter selection
F678	: Constant at the time of filtering	AM	: AM terminal meter adjustment
F681	: FM voltage/current output switching	F685	: Inclination characteristic of AM output
F682	: Inclination characteristic of FM output	F686	: AM bias adjustment
F683	: FM bias adjustment		

• **Function**

Inverter's operation data is sent to the FM terminal (AM terminal) as analog voltage signals or analog current signals. To display inverter's operation data, connect a meter to this terminal. The "FM terminal-connected meter adjustment FM" (AM terminal-connected meter adjustment AM) parameter is used to calibrate the meter.

Note 1: The signal output from the FM and AM terminal is an analog voltage signal or an analog current signal. (positive (+) side output. In the case of output the signed data, the signal is added offset. Offset level is able to adjust by F683 and F686. If monitoring the output data with positive and negative voltage, you need to use "expansion I/O card2 option".

Note 2: To the FM terminal, connect either a full-scale 0~1mAdc ammeter or a full-scale 0~7.5Vdc (or 10Vdc) voltmeter, if necessary. The FM terminal can also be used as a 0(4)~20mAdc output terminal.
To the AM terminal, connect either a full-scale 0~1mAdc ammeter or a full-scale 0~7.5Vdc (or 10Vdc) voltmeter, if necessary.

Connect meters as shown below.

<Connection to terminal FM>

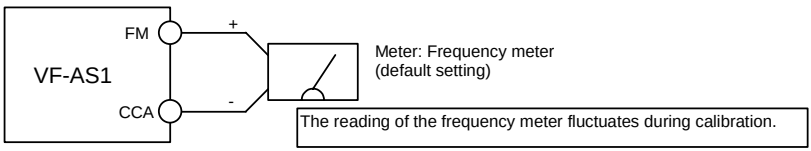

A frequency meter QS60T is optionally available.

■ Output modes of the FM terminal

When used with a 0~1mAdc ammeter (Default setting)

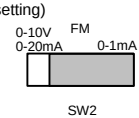

When used with a DC0~10V voltmeter

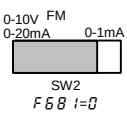

When used with a 0(4)~20mAdc

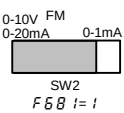

When the optional frequency meter QS60T is connected, this mode is selected.

<Connection to terminal AM >

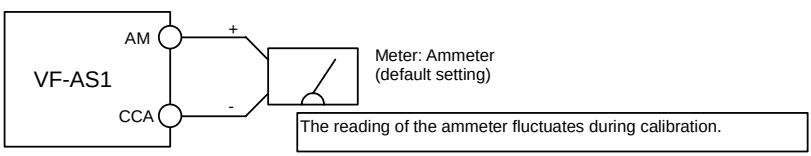

It is recommendable to use an ammeter with a current rating 1.5 or more times as high as the output current rating of the inverter.

[Terminal FM-related parameters]

Title	Function	Adjustment range	Adjustment level	Default setting
FMSL	FM terminal meter selection	0: Output frequency 1: Frequency command value 2: Output current 3: Input voltage (DC detection) 4: Output voltage 5: Compensated frequency *2 6: Speed feedback (real-time value) 7: Speed feedback (1 second filter) 8: Torque 9: Torque command 11: Torque current 12: Exiting current 13: PID feedback value 14: Motor overload factor (OL2 data) 15: Inverter overload factor (OL1 data) 16: Regenerative braking resistance overload factor (OLr data) 17: Regenerative braking resistor load factor (% ED) 18: Input power 19: Output power 23: Optional AI2 input 24: RR/S4 input 25: VI/II input 26: RX input 27: Optional AI1 input 28: FM output (Do not select this option.) 29: AM output 30: Fixed output 1 31: Communication data output 32: Fixed output 2 33: Fixed output 3 34: Cumulative input power 35: Cumulative output power 45: Gain display 46~49: My function monitor 1~4 50: Signed output frequency 51: Signed frequency command value 52: Signed compensated frequency 53: Signed speed feedback (real-time value) 54: Signed speed feedback (1 second filter) 55: Signed torque 56: Signed torque command 58: Signed torque current 59: Signed PID feedback value 60: Signed RX input 61: Signed optional AI1 input 62~64: Signed fixed output 1~3 65~73: Function none 74: MON1 (Expansion I/O card2 option) 75: MON2 (Expansion I/O card2 option) 76: RP (Expansion I/O card2 option)	(a) (a) (b) (c) (c) (a) (a) (a) (d) (d) (b) (b) (a) (a) (a) (a) (a) (a) (a) (b) (b) (a) (a) (a) (a) (a) – – – – (a) (a) – *1 (a) (a) (a) (a) (a) (d) (d) (b) (a) (a) (a) – – (a) (a) (a)	0
FM	FM terminal meter adjustment	–		*3
F678	Constant at the time of filtering *4	4 msec, 8 msec~ 100 msec		64
F681	FM voltage/current output switching	0:Voltage output (0~10V), 1:Current output (0~20mA)		0
F682	FM output gradient characteristic	0:Negative gradient (downward-sloping), 1:Positive gradient (upward-sloping)		1
F683	FM bias adjustment	– 10.0~ 100.0 %		0.0
F684	FM output filter	0:No filter, 1:Filter approx. 10ms 2:Filter approx. 15ms, 3:Filter approx. 30ms 4:Filter approx. 60ms, 5:Filter approx. 120ms 6:Filter approx. 250ms, 7:Filter approx. 500ms 8:Filter approx. 1s		0

*1: Monitor adjustment level selected.

*2: “Compensated frequency” refers to the frequency actually sent from an inverter to the motor connected.

*3: Default setting value is adjusted for connection of frequency meters "QS60T".
(Between FM and CCA: Approx. 3.6V)

*4: The output current, input voltage, output voltage, compensated frequency, speed feedback (real-time value) torque, torque current and exciting current output (FM/AM/pulse and monitor output) can be filtered.

[Terminal AM-related parameters]

Title	Function	Adjustment range	Default setting
AMSL	AM terminal meter selection	Same as FMSL (29:AM output disabled)	2
AM	AM terminal meter adjustment	–	*1
F685	AM output gradient characteristic	0:Negative gradient (downward-sloping), 1:Positive gradient (upward-sloping)	1
F686	AM bias adjustment	– 10.0~ 100.0 %	0.0

*1: Default setting value is adjusted for connection of frequency meters "QS60T".
(Between AM and CCA: Approx. 3.6V)

■ Resolution

Both the terminals FM and AM have a maximum resolution of 1/1024.

With the default settings, FM terminal outputs about 4.7V (external impedance is ∞) or about 1mA (external impedance is 0Ω), when running frequency is 80Hz. AM terminal outputs about 4.7V or about 1mA, when the output current reading on the operation panel is 185%.

[Example of the calibration of the frequency meter connected to the terminal FM]

* Use the meter's adjustment screw to pre-adjust zero-point.

Key operated	LED display	Operation
–	60.0	Displays the operation frequency. (When standard monitor display selection F710=0 [Output frequency])
MODE	AUH	The first basic parameter "History function (AUH)" is displayed.
∧ ∨	FM	Press either the △ or ▽ key to select "FM."
ENT	60.0	Press the ENTER key to display the operation frequency.
∧ ∨	60.0	Press either the △ key or the ▽ key to adjust the meter. The meter reading will change at this time but be careful because there will be no change in the inverter's digital LED (monitor) indication. [Hint] It's easier to make the adjustment if you push and hold for several seconds. By setup, before the needle of meter beings to sway, it will take time.
ENT	60.0⇔FM	The adjustment is complete. FM and the frequency are displayed alternately.
MODE	60.0	The display returns to its original indications. (When standard monitor display selection F710=0 [Output frequency])

For meter connection, the VF-AS1 inverter has two output terminals; FM and AM, which can be used simultaneously.

■ Meter adjustment 1 when the inverter is at rest (adjustment by setting FMSL (AMSL) to 30: Fixed output 1, 32: Fixed output 2, 33: Fixed output 3)

If it is difficult to calibrate a meter because of large fluctuations of its reading, you may put the inverter out of operation to make its calibration easier.

It is possible to adjust the meter for the data item selected with the parameter FMSL or AMSL. Adjustment levels (a) through (d) shown in the table on the previous page change according to the settings of fixed outputs 1 through 3, as shown in the table below. Use this table as a reference when calibrating the meter(s).

Values adjusted with fixed outputs are put out from the FM (AM) terminal when values in the table are used for operation. For examples of adjustments, see the next page.

Fixed output 1 comes in handy for adjusting items at adjustment level (a) or (c).

Fixed output 2 comes in handy for adjusting items at adjustment level (b).

Fixed output 3 comes in handy for adjusting items at adjustment level (d).

	Meter adjustment		
Adjustment level	Fixed output 1 FMSL(AMSL)=30	Fixed output 2 FMSL(AMSL)=32	Fixed output 3 FMSL(AMSL)=33
(a)	FH *2	54%	40%
(b)	185%	100%	74%
(c)	150%	81%	60%
(d)	250%	135%	100%

*1: The 100% value of input/output power is the product of $\sqrt{3}$ ×200V (400V) × inverter's rated current.

*2: When FMSL (AMSL)= 16, 17,23~29,60~62,74~76, fixed output level is 100%.

[Example: Procedure of calibrating the meter connected to the terminal AM to which "output current" is assigned.]

Key operated	LED display	Operation
–	0.0	Displays the operation frequency. (Perform during operation stopped.) (When standard monitor display selection F710=0 [Output frequency])
MODE	AUH	The first basic parameter "History function (AUH)" is displayed.
△ ▽	AMSL	Press either the △ or ▽ key to select "AMSL."
ENT	2	Pressing the ENTER key allows the reading of parameter setting.
△	32	Set the parameter at 32 (fixed output for meter calibration 2) by pressing the △ key.
ENT	32⇔AMSL	Press the ENTER key to save the change. Then, AMSL and the set value are displayed alternately.
△	AM	Select the AM terminal meter adjustment AM by pressing the △ key.
ENT	100	Press the ENTER key to switch to the data display mode.
△ ▽	100	Press either the △ key or the ▽ key to adjust the meter. Adjust the pointer to the graduation to which you want it to point when the inverter passes a current 100% larger than its rated output current. (The meter reading will change at this time but be careful because there will be no change in the inverter's indication). [Hint] It's easier to make the adjustment if you push and hold for several seconds. ☞By setup, before the needle of meter beings to sway, it will take time.
ENT	100⇔AM	Press the ENTER key to save the change. Then AM and the set value are displayed alternately.
▽	AMSL	Select the "AM terminal meter adjustment AMSL" by pressing the ▽ key.
ENT	32	Pressing the ENTER key allows the reading of parameter setting.
▽	2	Return the parameter setting to 2 (output current display).
ENT	AMSL⇔2	Press the ENTER key to save the change. Then, AMSL and the set value are displayed alternately.
MODE	0.0	Press the MODE key three times to return to the running frequency display mode. (When standard monitor display selection F710=0 [Output frequency])

■ Gradient bias adjustment of analog monitor output

Here is an example of the adjustment of output from 0-20mA → 20-0mA, 4-20mA using the FM terminal.

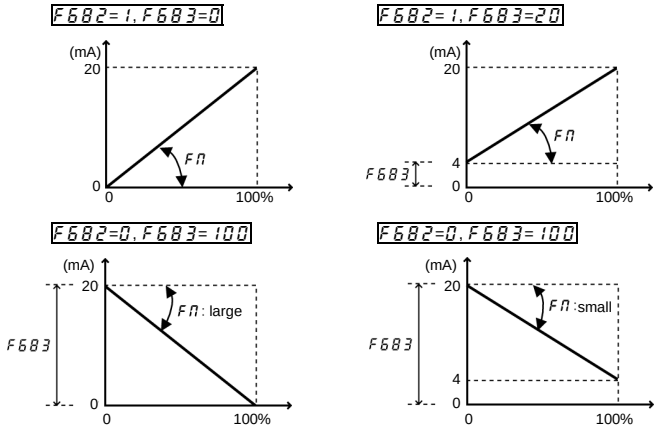

☜The analog output inclination can be adjusted using the parameter FM.

5.17 PWM carrier frequency

CF : PWM carrier frequency

F312 : Random mode

F316 : Carrier frequency control mode selection

• **Function**

1) The sound tone of acoustic noise can be changed by adjusting the PWM carrier frequency. This parameter is also effective in preventing the motor from resonating with its load machine or its fan cover.
2) In addition, this parameter reduces the electromagnetic noise generated by the inverter. Reduce the carrier frequency to reduce electromagnetic noise. Note: Although the electromagnetic noise level is reduced, the magnetic noise of the motor is increased.
3) The random mode reduces motor magnetic noise by changing the pattern of the reduced carrier frequency.
4) To set the parameter F316 to 2 or 3 has the effect of suppressing voltage serge to the motor. Reduce the carrier frequency to less than 4kHz if the wiring between the inverter and motor is long (20 to 100m as a guide).
5) In case of using the sinusoidal filter, set the parameter F316 to 4 or 5.
This parameter works at 200V-55kW or more and 400V-90kW or more models.

[Parameter setting]

Title	Function	Adjustment range	Default setting
CF	PWM carrier frequency	1.0~16.0kHz (2.5~8.0kHz) [Note 1]	According to model ⇒ Refer to page K-46.
F312	Random mode	0:Disabled, 1: Enabled	0
F316	Carrier frequency control mode selection	0:Not decrease carrier frequency automatically 1:Decrease carrier frequency automatically 2:Not decrease carrier frequency automatically, 400V class supported 3:Decrease carrier frequency automatically, 400V class supported 4:Not decrease carrier frequency automatically, with sinusoidal filter 5:Decrease carrier frequency automatically, with sinusoidal filter	1

Note 1: For 200V-55/75kW models and 400V-90kW to 400V-500kW models, the carrier frequency is between 2.5 and 8.0kHz inclusive.

Note 2: If CF is set at 2.0kHz or above, it cannot be decreased below 2.0kHz during operation. Changes made to decrease CF below 2.0kHz take effect when operation is restarted after it is stopped.
Note 3: If CF is 1.9kHz or less, you cannot change the setting at 2.0kHz or more. Changes made to increase CF to 2.0kHz or above take effect immediately.
Note 4: If Pt (V/f control mode selection) is set to 2, 3, 4, 7, or 8, the inverter sets a lower limit of 2.0kHz for CF.
Note 5: If F316=4 or 5 is set, it automatically becomes V/f control (Pt=0) mode. Moreover, the lower-limit of the career frequency becomes 4kHz.
Note 6: If you change the carrier frequency, you may need to reduce the inverter's continuous output current.
⇒ Refer to Section 1.4.4, "Current reduction curve."
Note 7: If the motor becomes overloaded when F316 is set to 0 or 2 (carrier frequency not decreased automatically), an overload trip occurs.
Note 8: For the setting F316=2 or 3 to take effect, power needs to be turned off and then turned back on. And this parameter is invalidated for the ratings of 90 kW and over.
Note 9: When setting F316 to 2 or 3, be sure to set CF at 4.0kHz or less.
Note 10: When setting the carrier frequency (CF) between 1 and 1.9kHz, you are recommended to set F601 below 130%.

5.18 Trip-less intensification

5.18.1 Auto-restart (Restart during coasting)

UuS : Auto-restart control selection

5

⚠ Warning

Mandatory	• Do not go near motors and equipment. Motors and equipment that have stopped temporarily after momentary power failure will restart suddenly after recovery. This could result in unexpected injury. • Attach warnings about sudden restart after a momentary power failure on inverters, motors and equipment for prevention of accidents in advance.

- **Function**
  Auto-restart detect the rotating speed and direction of rotation of the motor during coasting or momentary power failure, to ensure that the motor restarts smoothly (Motor speed search function). This parameter also allows commercial power operation to be switched to inverter operation without stopping the motor.
  During operation, "rtry" is displayed.

1) Auto-restart after momentary power failure (Auto-restart function)

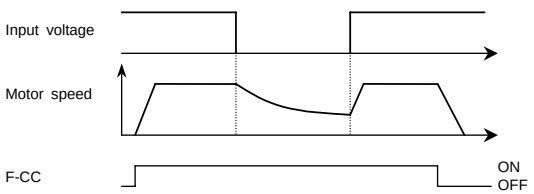

UuS= 1: This function operates after power has been restored following detection of an undervoltage by the main circuits and control power.

Title	Function	Adjustment range	Default setting	Setting value
UuS	Auto-restart control selection	0:Disabled 1:At auto-restart after momentary stop 2:When turning ST on or off 3: 1 + 2 4:At start-up	0	1 or 3

* If the motor is restarted in retry mode, this function will operate, regardless of the setting of this parameter.
* The function (UuS= 1,2,3,4) is activated when the reset of trip or the power is turned on.
* The function (UuS= 1,3) is activated when an undervoltage is detected in the main circuit.

2) Restarting motor during coasting (Motor speed search function)

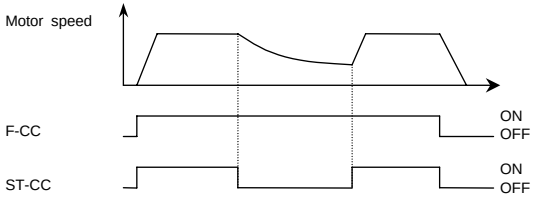

UuS=2: This function operates after the ST-CC terminal connection has been opened first and then connected again.

Title	Function	Adjustment range	Default setting	Setting value
UuS	Auto-restart control selection	0:Disabled 1:At auto-restart after momentary stop 2:When turning ST on or off 3: 1 + 2 4:At start-up	0	2 or 3

* To restart the inverter in operation panel operation mode, press RUN key after a power failure.
* When F376 (Number of PG input phases) = 1 (single phase) in PG feedback vector control mode (PE=7, 8), the inverter may trip (E-13: speed error) if the direction of rotation of the motor does not agree with.
*The function (UuS=3) is activated when ST signal turning on or restart after a momentary power failure.
*The function (UuS=4) is activated when starting each time.

5

Operation and application of the auto-restart function

• By using retry function F303 together, auto restart function can be actuated at the time of tripping.

Application to a crane or hoist

The crane or hoist may have its load moved downward during the above waiting time from input of the operation starting command to the restart of the motor. To apply the inverter to such machines, therefore, set the auto-restart control mode selection parameter UuS to "0" (Disabled). And avoid using the retry function.

• At restart, it takes several seconds. for the inverter to check to see the number of revolutions of the motor. For this reason, the start-up takes more time than usual.
• When the auto restart function is selected, this function is actuated also at time of activation of motor and at the first operation after the reset of tripping. The operation will restart after the waiting time passes.
• Use this function when operating a system with one motor connected to one inverter. This function may not operate properly in a system configuration with multiple motors connected to one inverter.

5.18.2 Regenerative power ride-through control/Deceleration stop during power failure/Synchronized acceleration/deceleration

UuC : Regenerative power ride-through control
F310 : Non-stop control time/Deceleration time during power failure
F317 : Synchronized deceleration time
F318 : Synchronized acceleration time
F625 : Under voltage detection level
F629 : Regenerative power ride-through control level

• **Function**

1) Regenerative power ride-through control: When momentary power failure occurs during operation, this function makes operation continue using the regeneration energy from a motor.

2) Deceleration stop during power failure: When momentary power failure occurs during operation, this function stops the motor quickly compulsorily. A forcible stop is carried out in F310 (Deceleration time) using the regeneration energy from the motor.
(Deceleration time varies with control.)
After the forced stop, the inverter remains static until you put off the operation command momentarily.

3) Synchronized acceleration/deceleration: When the inverter is used with textile machines, this function stops more than one textile machine simultaneously in the event of a momentary power failure and it prevents the breakage of yarns around bobbins at the recovery from the

[Parameter setting]

Title	Function	Adjustment range	Default setting
UuC	Regenerative power ride-through control selection	0:Disabled 1:Power ride-through 2: Deceleration stop during power failure: 3:Synchronized deceleration/acceleration (synchronized acceleration/deceleration signal) 4:Synchronized deceleration/acceleration (synchronized acceleration/deceleration signal+power failure)	0
F310	Non-stop control time/Deceleration time during power failure	0.1~320.0 sec.	2.0
F317	Synchronized deceleration time	0.1~6000 sec.	2.0
F318	Synchronized acceleration time	0.1~6000 sec.	2.0
F625	Under voltage detection level	50~79 %, 80: Automatic mode	80
F629	Regenerative power ride-through control level	55~ 100 %	75

Note 1: The power ride-through control time when UuC = 1 depends on the setting of F310, and the deceleration time when UuC=2 depends on the setting of F310.
Also, the deceleration time and the acceleration time when UuC=3 or 4 depend on the setting of F317 and that of F318, respectively.
Note 2: Even if these functions are used, a motor may coast according to load conditions.
In this case, use the auto-restart function along with this parameter function.
Note 3: These functions do not operate at the time of torque control.
Note 4: Jog run function doesn't operate at synchronized acceleration/deceleration.
Note 5: Although the setting of F310 can be written when UuC is set to 1 (non-stop control), it cannot be written when UuC is set to 2 (momentary power failure slowdown stop).
Note 6: For the parameter F629, 100% corresponds to 200V (200V class) or 400V (400V class).

■ An example of setting when UuC = 1

[When power is interrupted]

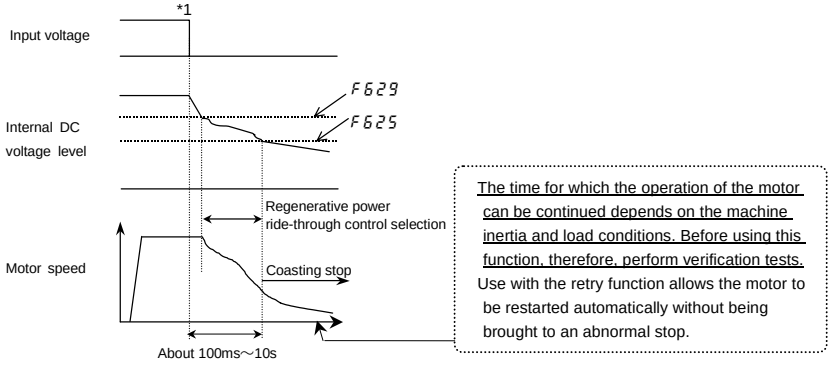

*1: Note: If power is interrupted during deceleration stop, power ride-through control will not be performed.

[If momentary power failure occurs]

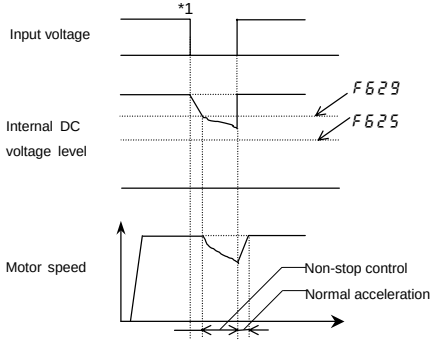

*1: Note: If power is interrupted during deceleration stop, power ride-through control will not be performed.

■ An example of setting when UuC=2

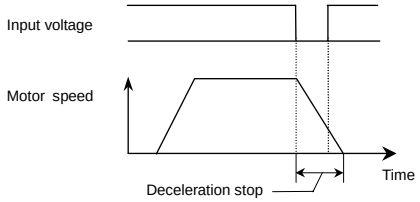

- Even after the recovery from an input power failure, the motor continues slowing down to a stop. If the voltage in the inverter main circuit falls below a certain level, however, control will be stopped and the motor will coast.
- The deceleration time varies according to the setting of F310. In this case, the deceleration time refers to the time elapsed before a motor running at FH (maximum frequency) comes to a full stop.
- If the voltage in main circuit below F625 (Under voltage detection level) at Non-stop control during power failure, the motor will coast and inverter display is shown "StOP 0.0(displayed alternately)". And then, If recovery from the input power failure, the motor continues coasting.

■ An example of setting when UuC=3 (when the function of receiving synchronized acceleration/deceleration signals is assigned to the input terminal S1)
F115 (Input terminal function selection 5 (S1)) =62 (Synchronized acceleration/deceleration signal)

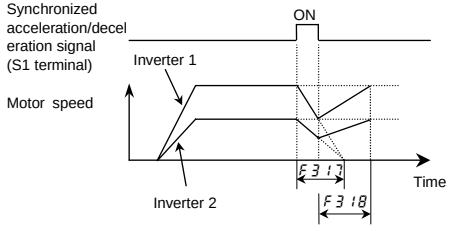

- If the parameters F317, F318 are set for same acceleration and deceleration time and if synchronized acceleration/deceleration signals set using the input terminal functions (62, 63) are used, multiple motors can be stopped at about the same time or speed commands can be issued to them at about the same time.
- If a synchronized acceleration/deceleration signal is impressed, the synchronized deceleration function decreases the output frequency to 0Hz to decelerate the motor linearly within the time specified with F317. (The S-pattern operation function or the braking sequence cannot be used along with this function.)
  When the motor comes to a full stop, the message “STOP” appears on the display panel.
- If the synchronized acceleration/deceleration signal is canceled during synchronized deceleration, the synchronized acceleration function increases the output frequency to the frequency at the start of synchronized deceleration or to the command frequency, whichever is lower, to accelerate the motor linearly within the time specified with F318. (The S-pattern operation function, the braking sequence or the auto-tuning function cannot be used along with this function.)
  When acceleration is started, the message “STOP” on the display panel disappears.
- If a forward/reverse switching command or a stop command is issued during synchronized acceleration or deceleration, synchronized acceleration or deceleration will be canceled.

■ An example of setting when UuC=4
Synchronized deceleration if a synchronized acceleration/deceleration signal is impressed or if a power failure occurs, or synchronized acceleration if the synchronized acceleration/deceleration signal is canceled.

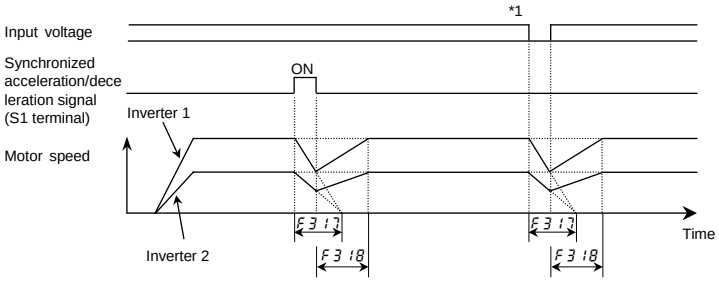

*1:Even with UuC = 1,2,4 functions are used, a motor may coast according to load conditions.
In this case, try to adjust the parameter "F625" and "F629".

5.19 Dynamic (regenerative) braking - For abrupt motor stop

Pb : Dynamic braking selection
Pbr : Dynamic braking resistance
PbCP : Allowable continuous braking resistance
F639 : Braking resistance overload time

5

• **Function**
Dynamic braking is used in the following cases:
1) Need to stop the motor quickly.
2) The inverter trips because of an overvoltage (OP) during deceleration.
3) Fluctuation of load condition causes a regenerative power even at a constant speed such as press machine.

[Parameter setting]

Title	Function	Adjustment range	Default setting
Pb	Dynamic braking selection	0:Disabled 1:Enabled (bracking resistance overload detect) 2:Enabled (bracking resistance overload not detect)	0
Pbr	Dynamic braking resistance	0.5~1000 Ω	According to model ⇒ Refer to page K-46.
PbCP	Allowable continuous braking resistance	0.01~600.0 kW	According to model ⇒ Refer to page K-46.
F639	Braking resistance overload time	0.1~600.0 sec.	5.0

* Protection levels defined by F626 (Refer to Section 6.14.2).

Note 1: The time set using F639 is the time for which the resistor sustains an overload. (Enter the time elapsed before the inverter trips if a load 10 times as large as the allowable continuous braking resistance specified using PbCP is applied.) There is no need to change resistance settings recommended by Toshiba (except DGP resistance setting).

Note 2: If the parameter Pb is set to 1 or 2 (regenerative braking selected), the inverter will be set automatically so as to deal with the regenerative energy from the motor by means of a resistor, without taking any action to limit overcurrent. (The same function as F305= 1)

Note 3: For inverters with ratings of 400V-200kW or more, set Pb to 0, because separate dynamic braking units are not included as standard equipment.

All 200V VF-AS1 and 400V VF-AS1 with ratings of up to 160kW have built-in dynamic braking transistors as standard equipment. If the rating of your inverter falls within this range, connect the resistor, as shown in Figure a) below or Figure b) on the next page. If your inverter has a power rating of 200kW or more, connect a resistor, as shown in Figure c).

Connecting an external braking resistor (optional)

a) External braking resistor (with a thermal fuse) (optional)

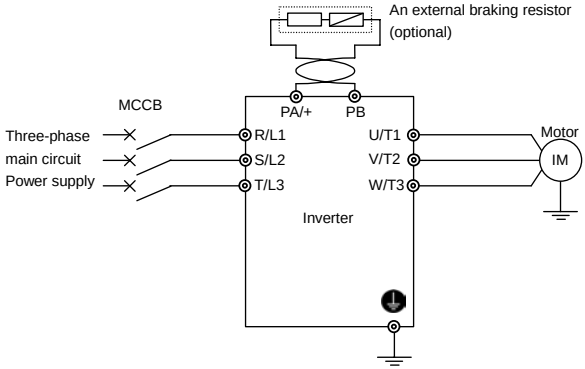

[Parameter setting]

Title	Function	Adjustment range	Setting value
Pb	Dynamic braking selection	0:Disabled 1:Enabled (braking resistance overload detect) 2:Enabled (braking resistance overload not detect)	1

Do not connect an external resistor with a resistance (combined resistance) smaller than the minimum admissible resistance.

For overload protection, be sure to set the parameters Pbr and PbCP properly.

[Parameter setting]

Title	Function	Adjustment range	Setting value
Pbr	Dynamic braking resistance	0.5~ 1000 Ω	Any value
PbCP	Allowable continuous braking resistance	0.01~600.0 kW	Any value
F639	Braking resistance overload time	0.1~600.0 sec.	Set the parameter to 5.0 for type PBR*- or to any value for other types.

b) When a using braking resistor without thermal fuse

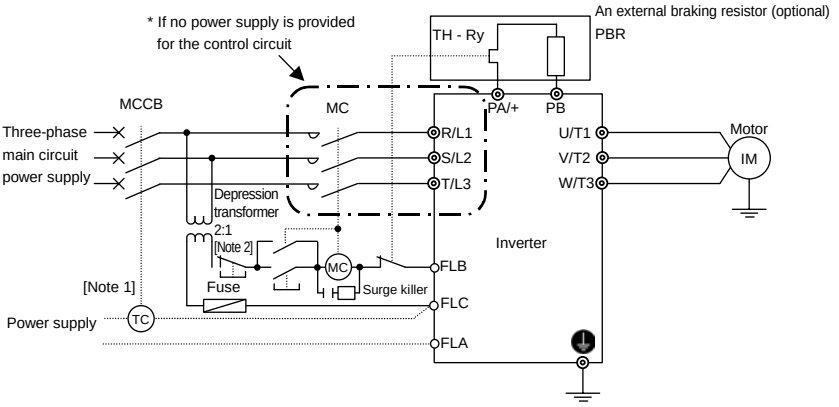

Note 1: Connection when using an MCCB with a top coil instead of an MC.
Note 2: A depression transformer is required for 400V models but not for 200V models.

5

[Parameter setting]

Title	Function	Adjustment range	Setting value
Pb	Dynamic braking selection	0:Disabled 1:Enabled (braking resistance overload detect) 2:Enabled (braking resistance overload not detect)	1
Pbr	Dynamic braking resistance	0.5~1000 Ω	Any value
PbCP	Allowable continuous braking resistance	0.01~600.0 kW	Any value

(When the thermal braking resistor option is not used, be sure to set the parameters Pbr and PbCP properly for overload protection.)

* As a last resort to prevent fire, be sure to connect a thermal relay (Be sure to use bimetals method). Although the inverter has a means of preventing overload and overcurrent to protect the braking resistor, the thermal relay is activated in case the protection function fails to work. Select and connect a thermal relay (THR) appropriate to the capacity (wattage) of the braking resistor.

- Warning -

In the above circuit, the MC in the main circuit is turned off if an inverter's protective function is activated, and consequently no trip message is displayed. The inverter recovers from a trip if it is turned off. So, check the trip history record after turning off the inverter and then on again. ⇒ Refer to Section 8.2.1.
To prevent a trip condition from being cleared by turning off the power and then on again, change the setting of the inverter trip retention selection parameter F602. ⇒ Refer to Section 6.33.2.

c) Capacities of 400V-200kW or more

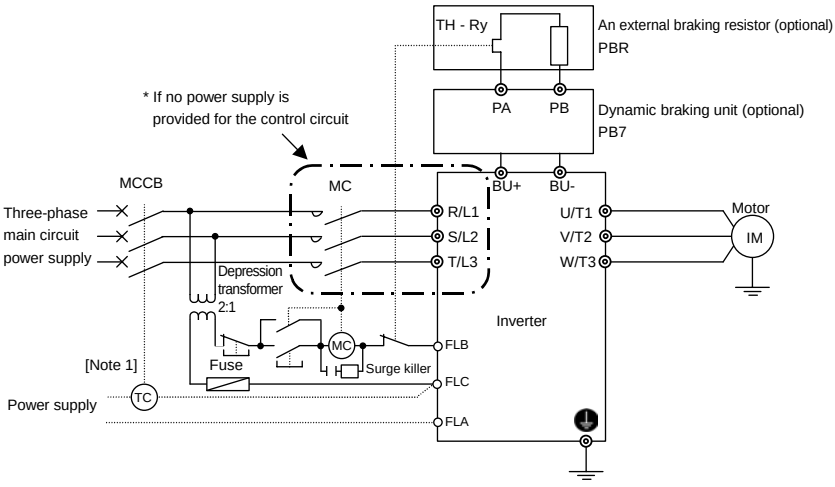

Note 1: Connection when using an MCCB with a top coil instead of an MC.

[Parameter setting]

Title	Function	Adjustment range	Setting value
Pb	Dynamic braking selection	0:Disabled 1:Enabled (braking resistance overload detect) 2:Enabled (braking resistance overload not detect)	0

* As a last resort to prevent fire, be sure to connect a thermal relay (Be sure to use bimetals method). Although the inverter has a means of preventing overload and overcurrent to protect the braking resistor, the thermal relay is activated in case the protection function fails to work. Select and connect a thermal relay (THR) appropriate to the capacity (wattage) of the braking resistor.

- Warning -

In the above circuit, the MC in the main circuit is turned off if an inverter's protective function is activated, and consequently no trip message is displayed. The inverter recovers from a trip if it is turned off. So, check the trip history record after turning off the inverter and then on again. ⇒ Refer to Section 8.2.1.

To prevent a trip condition from being cleared by turning off the power and then on again, change the setting of the inverter trip retention selection parameter F602. ⇒ Refer to Section 6.33.2.

■ **Selection of braking resistor option and braking unit**

Standard braking resistors are listed in the table below.
The usage rate is 3%. (Except for type DGP***)

Inverter type	Braking resistor		
	Model number [Note 2]	Rating	Continuous regenerative braking allowable capacity [Note 1]
VFAS1-2004PL, 2007PL	PBR-2007	120W -200Ω	90W
VFAS1-2015PL, 2022PL	PBR-2022	120W -75Ω	90W
VFAS1-2037PL	PBR-2037	120W - 40Ω	90W
VFAS1-2055PL	PBR3-2055	240W - 20Ω	96W
VFAS1-2075PL	PBR3-2075	440W -15Ω	130W
VFAS1-2110PM	PBR3-2110	660W -10Ω	200W
VFAS1-2150PM, 2185PM	PBR3-2150	880W -7.5Ω	270W
VFAS1-2220PM	PBR3-2220	1760W -3.3Ω	610W
VFAS1-2300PM	PBR3-2220	1760W - 3.3Ω	610W
VFAS1-2370PM ~2550P	PBR-222W002	2200W - 2Ω	1000W
VFAS1-2750P	DGP600W-B1	3.4kW - 1.7Ω	3400W
VFAS1-4007PL ~4022PL	PBR-2007	120W - 200Ω	90W
VFAS1-4037PL	PBR-4037	120W -160Ω	90W
VFAS1-4055PL	PBR3-4055	240W - 80Ω	96W
VFAS1-4075PL	PBR3-4075	440W -60Ω	130W
VFAS1-4110PL	PBR3-4110	660W - 40Ω	190W
VFAS1-4150PL, 4185PL	PBR3-4150	880W -30Ω	270W
VFAS1-4220PL	PBR3-4220	1760W - 15Ω	540W
VFAS1-4300PL	PBR3-4220	1760W- 15Ω	540W
VFAS1-4370PL ~4750PL	PBR-417W008	1760W -8Ω	1000W
VFAS1-4900PC ~4160KPC	DGP600W-B2	7.4kW - 3.7Ω	7400W
VFAS1-4200KPC, 4220KPC [Note 3]	PB7-4200K + DGP600W-B3	8.7kW -1.9Ω	8700W
VFAS1-4280KPC [Note 3]	PB7-4200K + DGP600W-B4	14kW - 1.4Ω	14000W
VFAS1-4355KPC, 4400KPC [Note 3]	PB7-4400K + DGP600W-B3 ×2 (parallel)	17.4kW –0.95Ω	17400W
VFAS1-4500KPC [Note 3]	PB7-4400K + DGP600W-B4 ×2 (parallel)	28kW –0.7Ω	28000W

Note 1: Continuous regenerative braking allowable capacities vary according to the rated capacity and resistance of the resistor for reasons of endurance.

Note 2: PBR-□□□□, PBR3-□□□□ and DGP600W-B□: Braking resistor (Connected to PA/+, PB terminal)

Note 3: PB7-4□□□: Braking unit (Connected to BU+, BU- terminal)
Combined braking resistor (Connected to PA/+, PB terminal of PB7-4□□□)

■ **Minimum resistance of connectable braking resistors**

The minimum allowable resistance values of the externally connectable braking resistors are listed in the table below.

Do not connect braking resistors with smaller resultant resistance than the listed minimum allowable resistance values.

(For 200kW or greater models, a dynamic braking resistor drive unit (optional separate unit) is needed.)

Inverter Related output capacity (kW)	200V Class		400V Class	
	Resistance of standard option	Minimum allowable resistance	Resistance of standard option	Minimum allowable resistance
0.4	200Ω	50Ω	–	–
0.75	200Ω	50Ω	200Ω	60Ω
1.5	75Ω	35Ω	200Ω	60Ω
2.2	75Ω	20Ω	200Ω	60Ω
3.7/4.0	40Ω	16Ω	160Ω	40Ω
5.5	20Ω	11Ω	80Ω	30Ω
7.5	15Ω	8Ω	60Ω	20Ω
11	10Ω	5Ω	40Ω	20Ω
15	7.5Ω	5Ω	30Ω	13.3Ω
18.5	7.5Ω	3.3Ω	30Ω	13.3Ω
22	3.3Ω	3.3Ω	15Ω	13.3Ω
30	3.3Ω	2.5Ω	13.3Ω	10Ω
37	2Ω	1.7Ω	8Ω	6.7Ω
45	2Ω	1.7Ω	8Ω	5Ω
55	2Ω	1.7Ω	8Ω	5Ω
75	1.7Ω	1.3Ω	8Ω	3.3Ω
90	–	–	3.7Ω	2.5Ω
110	–	–	3.7Ω	1.9Ω
132	–	–	3.7Ω	1.9Ω
160	–	–	3.7Ω	1.9Ω
200	–	–	1.9Ω	1Ω
220	–	–	1.9Ω	1Ω
280	–	–	1.4Ω	1Ω
355	–	–	0.95Ω	0.7Ω
400	–	–	0.95Ω	0.7Ω
500	–	–	0.7Ω	0.7Ω

5.20 Standard default setting

tYP : Factory default setting

• **Function**
This parameter is to set two or more parameters at a time for different commands. Using this parameter, all parameters can be also return to their respective default settings by one operation, and save or set specific parameters individually.

Title	Function	Adjustment range	Default setting
tYP	Factory default setting	0: – 1:50Hz default setting 2:60Hz default setting 3:Factory default setting 4:Trip clear 5:Cumulative operation time cleared 6:Initialization of type information 7:Save user-defined parameters 8:Reset of user-defined parameters 9:Cumulative fan operation time record clear 10:Acceleration/deceleration time setting 0.01 sec.~600.0 sec. [Note 4] 11:Acceleration/deceleration time setting 0.1 sec.~6000 sec.	0

Note 1: This parameter is used to change the settings of other parameters. Therefore, 0 is always displayed.
Note 2: tYP cannot be set during the inverter operating. Always stop the inverter first and then program.
Note 3: When parameter tYP is invoked, the value set previously is displayed on the left side of the parameter.
Note 4: If tYP is set to 10, the optional communication devices DEV002Z, PDP002Z and CCL001Z cannot be used with the inverter. (The personal computer communications software PCM001Z cannot be used, either.) Furthermore, the copy function of the LED extended panel option (RKP002Z) does not work normally, so use only the parameter setting function and the monitoring function.
Note 5: If the power is turned off while the parameter tYP is being set, an error (EEP2) will occur when the power is turned back on. If the EEP2 error occurs, set tYP again.

[Programmed value]

50Hz default setting (tYP= 1)

Setting tYP at 1 causes all the following parameters to be set for operation using a base frequency of 50Hz.
(This does not change the settings of any other parameters.)

- Maximum frequency FH : 50Hz
- Base frequency 1 uL : 50Hz
- Base frequency 2 F170 : 50Hz
- Base frequency 3 F174 : 50Hz
- Base frequency 4 F178 : 50Hz
- Upper limit frequency UL : 50Hz
- Forward speed limit input level F426 : 50Hz
- Reverse speed limit input level F428 : 50Hz
- Commercial power/inverter switching frequency F355 : 50Hz
- Point 2 frequency F814 : 50Hz
- Automatic light-load high-speed operation frequency F330 : 50Hz
- VI/II input point 2 frequency A1F2 : 50Hz
- RR/S4 input point 2 frequency AuF2 : 50Hz
- RX input point 2 frequency F219 : 50Hz
- AI1 input point 2 frequency F225 : 50Hz
- AI2 input point 2 frequency F231 : 50Hz
- RP/high-speed pulse input point 2 frequency F237 : 50Hz
- PID deviation upper limit F364 : 50Hz
- PID deviation lower limit F365 : 50Hz
- Process upper limit F367 : 50Hz
- PID output upper limit F370 : 50Hz
- Motor rated rotational speed F407 :1400~1480min-1 (According to model)

60Hz default setting (tYP=2)

Setting tYP at 2 causes all the following parameters to be set for operation using a base frequency of 60Hz.
(This does not change the settings of any other parameters.)

- Maximum frequency FH : 60Hz
- Base frequency 1 uL : 60Hz
- Base frequency 2 F170 : 60Hz
- Base frequency 3 F174 : 60Hz
- Base frequency 4 F178 : 60Hz
- Upper limit frequency UL : 60Hz
- Forward speed limit input level F426 : 60Hz
- Reverse speed limit input level F428 : 60Hz
- Commercial power/inverter switching frequency F355 : 60Hz
- Point 2 frequency F814 : 60Hz
- Automatic light-load high-speed operation frequency F330 : 60Hz
- VI/II input point 2 frequency A1F2 : 60Hz
- RR/S4 input point 2 frequency AuF2 : 60Hz
- RX input point 2 frequency F219 : 60Hz
- AI1 input point 2 frequency F225 : 60Hz
- AI2 input point 2 frequency F231 : 60Hz
- RP/high-speed pulse input point 2 frequency F237 : 60Hz
- PID deviation upper limit F364 : 60Hz
- PID deviation lower limit F365 : 60Hz
- Process upper limit F367 : 60Hz
- PID output upper limit F370 : 60Hz
- Motor rated rotational speed F407 :1680~1775min-1 (According to model)

Default setting (tYP=3)

Setting parameter tYP to 3 resets all parameters except the following to their default settings.

When this parameter is set to 3, In It is displayed for a while, then switches back to the original display (OFF or 0.0). Note that this setting also clears all trip history records. Trip history data will be cleared at this time.

Following parameters are designed considering maintenance that they cannot be reset to the factory default setting even if you set the parameter tYP at 3. Following parameters are not displayed on the user parameter group GrU even if their settings are different from their default settings. So please be careful.

Title	Function
AUX	History function
FMSL	FM terminal meter selection
FM	FM terminal meter adjustment
AMSL	AM terminal meter selection
AM	AM terminal meter adjustment
F108	Analog VI/VII voltage/current switching
F109	Analog AI2 (optional circuit board) voltage/current switching
F470	VI/II input bias
F471	VI/II input gain
F472	RR/S4 input bias
F473	RR/S4 input gain
F474	RX input bias
F475	RX input gain
F476	Optional AI1 input bias
F477	Optional AI1 input gain

Title	Function
F478	Optional AI2 input bias
F479	Optional AI2 input gain
F669	Logic output/pulse train output selection (OUT1)
F672	MON1 terminal meter selection
F673	MON1 terminal meter adjustment
F674	MON2 terminal meter selection
F675	MON2 terminal meter adjustment
F681	FM voltage/current output switching
F688	MON1 voltage/current output switching
F691	MON2 voltage/current output switching
F751~ F782	Quick registration parameter 1~32
F880	Free notes
F899	Network option reset setting

Trip clear (tYP=4)

Setting tYP to 4 initializes the past four sets of recorded trip history data.

* (The parameter does not change.)

Cumulative operation time clear (tYP=5)

Setting tYP to 5 resets the cumulative operation time monitor to the initial value (0 [zero] time).

Initialization of type information (tYP=6)

When a trip occurs because of a type error (EtYP is displayed), you can clear the trip by setting tYP to 6. This function is used to reformat a control circuit board to adapt it to an inverter, for example, when a circuit board is removed from an inverter to use another inverter for maintenance or for other reasons. This setting clears all type data stored in the inverter.

Save user-defined parameters (tYP=7)

Setting tYP to 7 causes all the current parameter settings to be stored individually.

Reset of user-defined parameters (tYP=8)

Setting tYP to 8 returns all parameters to the settings saved by setting the parameter tYP=7.

* The above settings 7 and 8 allows you to have your own default parameter settings.

Cumulative fan operation time clear (tYP=9)

Setting tYP to 9 resets the cumulative fan operation time to the initial value (0 [zero] time). Set this parameter when replacing the cooling fan, and so on.

Acceleration/deceleration time setting: 0.01 to 600.0 sec. (tYP= 10)

When tYP is set to 10, the acceleration/deceleration time can be set within a range of 0.01 to 600.0 sec.

Acceleration/deceleration time setting: 0.1 to 6000 sec. (tYP= 11)

When tYP is set to 11, the acceleration/deceleration time can be set within a range of 0.1 to 6000 sec.

5.21 Searching for all reset parameters and changing their settings

GrU : Automatic edit function

• **Function**
Automatically searches for only those parameters that are programmed with values different from the standard default setting and displays them in the user parameter group GrU. Parameter setting can also be changed within this group.

Note 1: If you reset a parameter to its factory default, the parameter will no longer appear in GrU.
Note 2: It may take several seconds to display changed parameters because all data stored in the user parameter group GrU is checked against the factory default settings. To cancel the parameter group search in process, press the MODE key.
Note 3: Parameters which cannot be reset to the default setting after setting tYP to 3 are not displayed.
⇒ Refer to Section 5.20 for details.

■ How to search and reprogram parameters
The operations of search and resetting of parameters are as follows.

Key operated	LED display	Operation
	0.0	Displays the operation frequency (operation stopped). (When standard monitor display selection F710=0 [Output frequency])
MODE	RUH	The first basic parameter "History function (RUH)" is displayed.
△ ▽	GrU	Press △ or ▽ key to select GrU.
ENT	U---	Press the ENTER key to enable the user parameter automatic edit function.
ENT or △ ▽	RCC	Searches for parameters that are different in value from the standard default setting and displays those parameters. Press the ENTER key or the △ key to change the parameter displayed. (Press the ▽ key to search for parameters in reverse direction.)
ENT	8.0	Press the ENTER key to display the set value.
△ ▽	5.0	Press the △ key and ▽ key to change set value.
ENT	5.0⇔RCC	Press the ENTER key to save the changed value. The parameter name and the programmed value will flash on and off alternately.
△ (▽)	U--F (U--r)	Use the same steps as those given above to display parameters that you want to search for or change setting with the △ key and ▽ key.
△ (▽)	GrU	When "GrU" appears again, the search is ended.
MODE MODE	Parameter display ↓ Fr-F ↓ 0.0	A search can be canceled by pressing the MODE key. Press the key once while the search is underway to return to the display of parameter setting mode. After that you can press the MODE key to return to the status monitor mode or the standard monitor mode (display of operation frequency).

5.22 EASY key function

PSEL : Registered parameter display selection

F751 - F782 : Quick registration parameter 1~32

F750 : EASY key function selection

• **Function**
The following three functions can be assigned to the (EASY) key for easy operation by means of a single key.
• Setting monitor mode switching function
• Shortcut key function
• Operation panel/remote key function

[Parameter setting]

Title	Function	Adjustment range	Default setting
PSEL	Registered parameter display selection	0: Standard setting mode at time of activation of motor 1: Quick mode at time of activation of motor 2: Quick mode only	0
F750	EASY key function selection	0: Quick mode/ standard setting mode switching function 1:Shortcut key: Pressing for 2 sec. to record the parameter, pressing normally to jump to recorded parameter (first jump to the 1st history) 2:Operation panel/remote key: Operation panel by ON 3: Monitor peak minimum hold trigger	0

■ **Quick mode/standard setting mode switching function (F750=0)**
The EASY key allows you to switch between quick mode and standard setting mode.
The way parameters are read out and displayed varies according to the mode selected.

Quick mode
This mode allows you to previously select parameters (max. 32 parameters) whose settings need to be changed frequently and to read them out only. Eight parameters are selected by default; add or remove parameters as required.

Standard setting mode
Standard setting mode in which all parameters are read out.

[How to read out parameters]
To enter the setting monitor mode, set parameter F750 to 0, switch to the setting monitor mode using the EASY key, and then press the (MODE) key.
Press the (△) key or the (▽) key to read out parameters in ascending or descending order.
The relation between the parameter and the mode selected is shown below.

PSEL=0
***** Standard setting mode at time of activation of motor. Press the (EASY) key to switch to the quick mode.

PSEL= 1
***** Quick mode at time of activation of motor. Press the (EASY) key to switch to the standard setting mode.

PSEL=2
* Quick mode (fixed).

* How to cancelxk the Quick mode (PSEL=2) setting
When this parameter is set to 2 (Quick mode), press and hold down the (ENT) key for 5 seconds or more.

[How to select parameters]
Select the desired parameters as parameters 1 to 32 (F751~F782). Note that parameters should be specified by communication number. For communication numbers, refer to Table of parameters.
In the quick mode, only parameters registered as parameters 1 to 32 are displayed in order of registration.
By default, parameters are set as shown in the table below.

[Parameter setting]

Title	Function	Adjustment range	Default setting
F751	Quick registration parameter 1	0~999	40(AU4)
F752	Quick registration parameter 2	0~999	15(Pt)
F753	Quick registration parameter 3	0~999	11(FH)
F754	Quick registration parameter 4	0~999	9(ACC)
F755	Quick registration parameter 5	0~999	10(dEC)
F756	Quick registration parameter 6	0~999	600(tHr)
F757	Quick registration parameter 7	0~999	6(FM)
F758 ~ F781	Quick registration parameter 8 ~ Quick registration parameter 31	0~999	999
F782	Quick registration parameter 32	0~999	50(PSEL)

Note: If any number other than communication numbers is specified, it is regarded as 999 (no function assigned).

Continuous 999: Disabled

5

■ **Shortcut key function (F750= 1)**

This function allows you to register, in a shortcut list, parameters whose settings need to be changed frequently so that you can read them out easily in a single operation.
The shortcut is usable in the frequency monitor mode only.

[Operation]
Set the parameter F750 to 1, read out the setting of the parameter you want to register, and press and hold down the EASY key for 2 sec. or more. The registration of the parameter in a shortcut list has been completed.
To read out the parameter, just press the EASY key.

■ **Operation panel/remote key function (F750=2)**

This function allows you to easily switch control devices (operation panel and terminal board) used to start and stop operation and to set the frequency.
To switch between control device, set the parameter F750 to 2, and then select the desired control device, using the EASY key.

[When using the terminal board]
If CMOd=0, no switching operation is required.

[When using the operation panel]
Turn on the EASY key.

■**Peak hold function (F750=3)**

This function allows you to set peak hold and minimum hold triggers for parameters F709, F966, F968, F970 and F972, using the EASY key. The measurement of the minimum and maximum values set for F709, F966, F968, F970 and F972 starts the instant when you press the EASY key after setting parameter F750 to 3.
The peak hold and minimum hold values are displayed in absolute values.

6. Extended parameters

Extended parameters are provided for sophisticated operation, fine adjustment and other special purposes.
⇒ Refer to Section 11, Table of parameters.

6.1 Input/output parameters

6.1.1 Low-speed signal

F100 : Low-speed signal output frequency

• **Function**
When the output frequency exceeds the setting of F100 an ON signal will be generated. This signal can be used as an electromagnetic brake excitation/release signal.
Through the open collector terminal OUT1 or OUT2 (24Vdc-50mA [max.]).

[Parameter setting]

Title	Function	Adjustment range	Default setting
F100	Low-speed signal output frequency	0.0~UL Hz	0.0

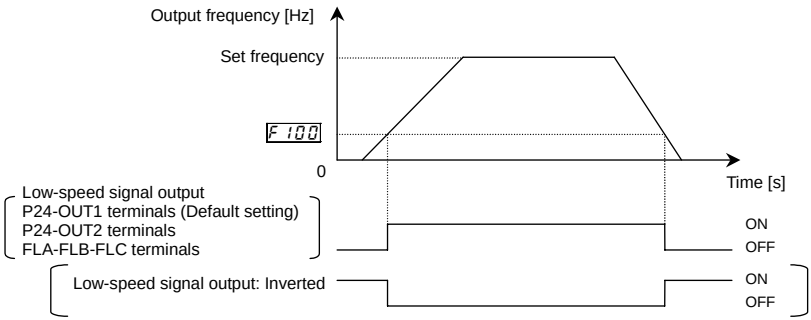

[Connection diagram (SW1 set to sink logic)]

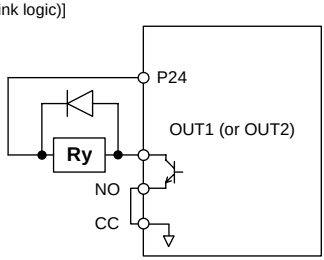

• **Output terminal setting**
The low-speed signal (ON signal) output function has been assigned to the terminal OUT1 by default. This setting must be changed to invert the polarity of the signal.
[Parameter setting]

Title	Function	Adjustment range	Example of setting
F130	Output terminal function selection 1(OUT1)	0~255	4(ON signal) or 5(OFF signal)

Note: To put out signals to OUT2, select the parameter F131.

6.1.2 Putting out signals of arbitrary frequencies

F101 : Speed reach setting frequency

F102 : Speed reach detection band

- **Function**

  When the output frequency becomes equal to the frequency set by F101 ± F102, an ON or OFF is generated.

[Parameter setting of frequency and detection band]

Title	Function	Adjustment range	Default setting
F101	Speed reach setting frequency	0.0~UL Hz	0.0
F102	Speed reach detection band	0.0~UL Hz	2.5

[Parameter setting of output terminal selection]

Title	Function	Adjustment range	Example of setting
F131	Output terminal function selection 2 (OUT2)	0~255	8 (RCH (specified speed ON signal)) or 9 (RCH (specified speed OFF signal))

Note: To put out signals to OUT1, select the parameter F130.

1) If the detection band value + the set frequency is less than the designated frequency

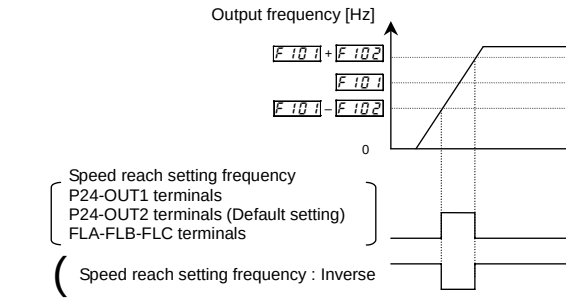

2) If the detection band value + the set frequency is more than the designated frequency

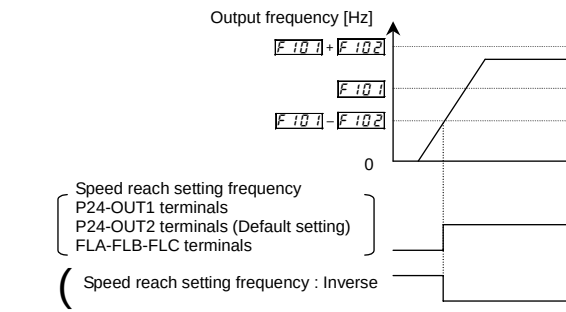

6.2 Input signal selection

6.2.1 Priority when forward/reverse run commands are entered simultaneously

F105 : Priority when forward/reverse run commands are entered simultaneously

• **Function**

This parameter allows you to select the direction in which the motor runs when a forward run (F) command and a reverse run (R) command are entered simultaneously.

1) Reverse run
2) Deceleration stop

[Parameter setting]

Title	Function	Adjustment range	Default setting
F105	Priority when forward/reverse run commands are entered simultaneously	0:Reverse run, 1:Stop	1

[F105=0 (Reverse run)] If a F command and a R command are entered simultaneously, **the motor will run in the reverse direction.**

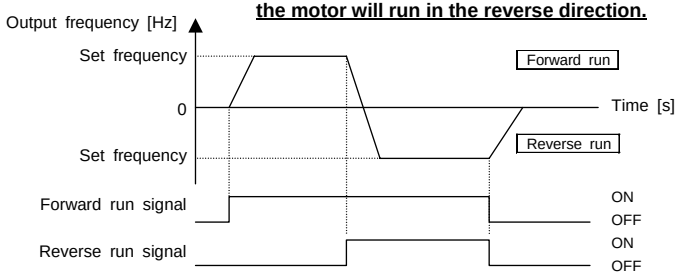

[F105=1 (Stop)] If a F command and a R command are entered simultaneously **the motor will slow down to a stop.**

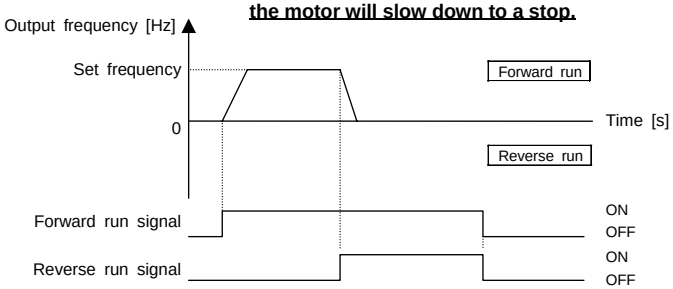

6

6.2.2 Assigning priority to the terminal board in the operation panel and operation mode

F106 : Input terminal priority selection

• **Function**
This parameter is used to give priority to certain external commands entered from the terminal board in operation panel and operation mode.
For example, when jogging the motor by giving signals externally.

[Parameter setting]

Title	Function	Adjustment range	Default setting
F106	Input terminal priority selection	0:Disabled, 1:Enabled	0

[0: Deselect (terminal board has no priority)]
Priority is always given to commands (operation commands) entered from the operation panel. To give priority to commands from the terminal board, it is necessary to switch from control panel operation to terminal board operation by sending signals through the terminal board.

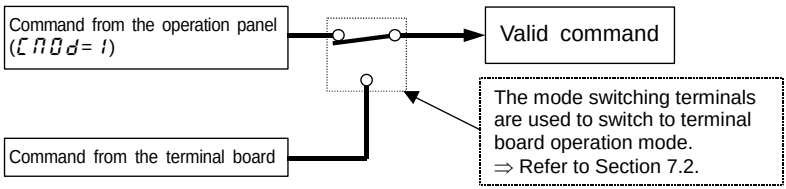

[1: Select (terminal board has priority)]
Priority is given to commands entered from the terminal board even in operation panel operation mode.

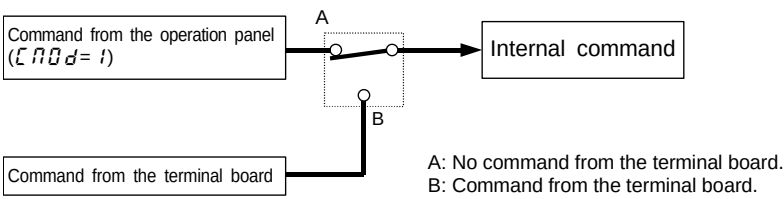

■ Priority command from terminal board (Operation command)
Jog run : input terminal selection 18/19
DC braking : input terminal selection 22/23

An example of switching to jog run in operation panel operation mode.

[In case that terminals S3 and CC are assigned to jog run]
Assign control terminal S3 ([14: preset speed 3] in default setting) as the jog run setting terminal.

Title	Function	Adjustment range	Example of setting
F117	Input terminal function selection 7 (S3)	0~135	18 (Jog run settin g terminal)

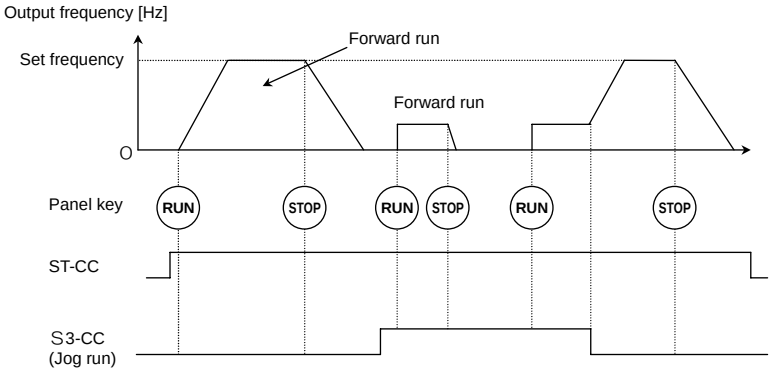

6.2.3 Analog input signal switching

F108 : Analog input VI/VII voltage/current switching

F109 : Analog input AI2 (optional circuit board) voltage/current switching

• **Function**
These parameters are used to switch signals to be sent to the analog input terminals VI/II and AI2 (optional).

6

[Parameter setting]

Title	Function	Adjustment range	Example of setting
F108	Analog VI/VII voltage/current switching	0: Voltage input 1: Current input	0
F109	Analog input AI2 (optional circuit board) voltage/current switching	0: Voltage input 1: Current input	0

When using the analog input terminal VI/II as a voltage input terminal (VI)
F108=0

When using the analog input terminal VI/II as a voltage input terminal (II)
F108=1

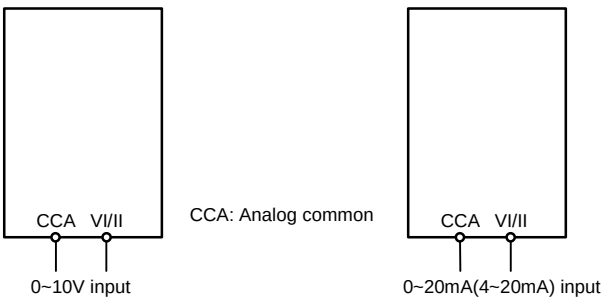

⇒ For an explanation of input gain and bias adjustments, refer to Section 6.28.

6.3 Terminal function selection

6.3.1 Keeping an input terminal function always active (ON)

F110 , F127, F128: Always ON function selection 1~3

• **Function**
This parameter specifies an input terminal function that is always kept active (ON). (Only one function selectable)

[Parameter setting]

Title	Function	Adjustment range	Default setting
F110	Always ON function selection 1	0~135	Inverter with a model number ending with -WN, HN: 0 -WP: 6
F127	Always ON function selection 2	0~135	0
F128	Always ON function selection 3	0~135	0

* The selected function is always kept active regardless of the type of logic (positive or negative) in the table of function settings in 7.2.1.

6.3.2 Modifying input terminal functions

F111 : Input terminal function selection 1 (F)
F112 : Input terminal function selection 2 (R)
F113 : Input terminal function selection 3 (ST)
F114 : Input terminal function selection 4 (RES)
F115 : Input terminal function selection 5 (S1)
F116 : Input terminal function selection 6 (S2)
F117 : Input terminal function selection 7 (S3)
F118 : Input terminal function selection 8 (RR/S4)
F119~F126 : Input terminal function selection 9~16
F164~F167 : Input terminal function selection 17~20

⇒ For details, refer to Section 7.2.1.

• **Function**
Use the above parameters to send signals from an external programmable controller to various control input terminals to operate and/or set the inverter.
The desired contact input terminal functions can be selected from 120 types (0- 135). This gives system design flexibility.
Using the SW3 switch, the function of the RR/S4 terminal can be selected between analog input and contact input. By default, the RR/S4 terminal is set as an analog input terminal (voltage input terminal). To use it as a contact input terminal, therefore, you need to turn the SW3 switch to the S4 position.

■ Setting of contact input terminal function

Terminal symbol	Title	Function	Adjustment range	Default setting
–	F110 [Note 3], F127, F128	Always ON function selection 1~3	0~135 (⇒ Refer to Section 11.)	0
F	F111	Input terminal function selection 1 (F)		2 (F)
R	F112	Input terminal function selection 2 (R)		4 (R)
ST	F110 [Note 4], F113	Input terminal function selection 3 (ST)		6 (ST)
RES	F114	Input terminal function selection 4 (RES)		8 (RES)
S1	F115	Input terminal function selection 5 (S1)		10 (S1)
S2	F116	Input terminal function selection 6 (S2)		12 (S2)
S3	F117	Input terminal function selection 7 (S3)		14 (S3)
The terminal below is operative only when SW3 is in the S4 position.			–	–
RR/S4	F118	Input terminal function selection 7 (S4)	0~135 [Note 2]	16 (S4)

Note 1: The function that has been selected using F110, F127 and F128 (always ON function selection 1~3 parameter) are always activated.
Note 2: When using the RR/R4 terminal as a contact input terminal (sink logic), always turn the SW3 slide switch to the S4 position.
Note 3: VFAS1-****-WN, HN
Note 4: VFAS1-****-WP

■ **Connection method**

1) a-contact input

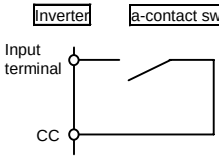

Sink setting

This function is activated when the input terminal and CC (common) are short-circuited. Use this function to specify forward/reverse run or a preset speed operation.

2) Connection with transistor output

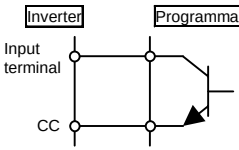

Operation can be controlled by connecting the input and CC (common) terminals to the output (no-contacts switch) of the programmable controller. Use this function to specify forward/reverse run or a preset speed operation. Use a transistor that operates at 24Vdc/5mA.

* Interface between programmable controller and inverter

Note: When using a programmable controller with open collector outputs for control, connect it to the P24/PLC terminal, as shown in the figure below, to prevent the inverter from malfunctioning because of current flowing in.

Also, be sure to turn the SW1 slide switch to the PLC position.

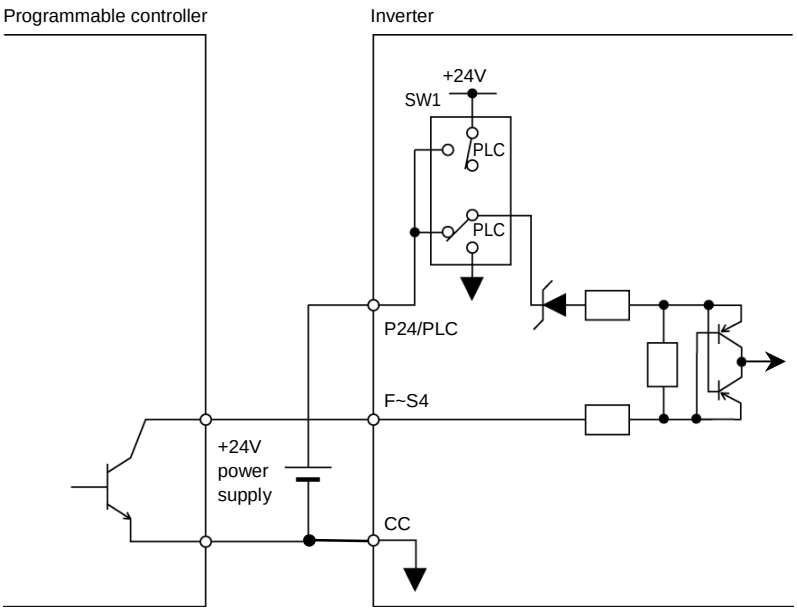

3) Sink logic/source logic input

Sink logic/source logic (input/output terminal logic) switching is possible.

⇒ For details, refer to Section 2.3.2.

6.3.3 Using the servo lock function

F113 : Input terminal function selection 3 (ST)

F240 : Starting frequency setting

• **Function**
As with the operation of a server motor, these parameters allow you to operate the motor at 0Hz by simply issuing an operation signal. These parameters are used to hold the motor at a standstill.

[Parameter setting]

Title	Function	Adjustment range	Example of setting
F113	Input terminal function selection 3 (ST)	0~135	70
F240	Starting frequency setting	0.0~10.0 Hz	0.0

Note 1: This function is enabled only when parameter Pt is set to 8 (PG feedback vector control).
Note 2: To activate servo lock, parameter F240 (starting frequency setting) needs to be set to 0 [Hz].
Note 3: These parameters are not intended for position control, and if a load larger than the holding power of the motor is applied, the motor rotates. Keep this in mind.

If parameter F113 (for selecting a function for the ST terminal) is set to 70, a servo lock signal is added to the ST signal. In that case, turning on the signal to the ST terminal activates the servo lock function. Note that even when the servo lock function is activated, or the operations can be performed normally by inputting an F or R signal.

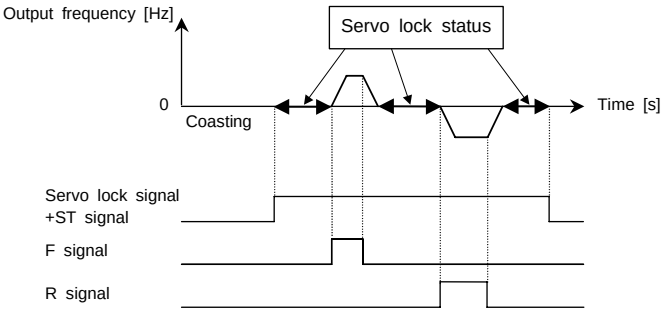

Even if the motor is started with servo lock activated, a starting torque of 150% or more can be produced.
In such a case, however, the thermal protection level is lowered just as is the case with low-speed operation.
Therefore, the following parameters
• OLM (Thermal protection characteristic selection)
• tHr (Motor electronic-thermal protection level 1), F173, F177, F181
• F606 (OL reduction starting frequency)
• F607 (Motor 150%-overload time limit)
need to be adjusted according to the motor.

6.3.4 Modifying output terminal functions

F130 : Output terminal function selection 1 (OUT1)

F131 : Output terminal function selection 2 (OUT2)

F132 : Output terminal function selection 3 (FL)

F133 ~ F138 : Output terminal function selection 4~9

F168 ~ F169 : Output terminal function selection 10, 11

⇒ For details, refer to Section 7.2.2.

6.3.5 Response time of input/output terminals

F140 : Input terminal 1 response time selection
F141 : Input terminal 2 response time selection
F142 : Input terminal 3 response time selection
F143 : Input terminal 4 response time selection
F144 : Input terminal 5~12 response time selection
F145 : Input terminal 13~20 response time selection

⇒ For details, refer to Section 7.2.3.
The output terminal and the response time can be set with “My function.”
⇒ For details, refer to Section 6.39.

6.4 Basic parameters 2

6.4.1 Switching among V/f characteristics 1, 2, 3 and 4 from input terminal

F170 : Base frequency 2
F171 : Base frequency voltage 2
F172 : Manual torque boost 2
F173 : Thermal protection level 2
F174 : Base frequency 3
F175 : Base frequency voltage 3
F176 : Manual torque boost 3
F177 : Thermal protection level 3
F178 : Base frequency 4
F179 : Base frequency voltage 4
F180 : Manual torque boost 4
F181 : Thermal protection level 4

6

• **Function**
Use the above parameters to switch the operation of 4 motors with a single inverter and to select motor V/f characteristics (1 to 4) according to the particular needs or operation mode.
[Switching methods]
Terminals are used for this switching.
Note: The setting of parameter Pt (V/f control mode selection) is valid only when V/f1 is selected. If V/f2,V/f3 or V/f4 is selected, V/f control is performed in constant torque mode. Do not switch motors when the parameter Pt (V/f control mode selection) is set at 7, 8. For parameters selected when changing V/f characteristics (1 to 4), refer to table on the next page.

Note: Refer to Section 5. 8 uL (Base frequency 1) for F170, F174 and F178,
Section 5. 8 uLu (Base frequency voltage 1) for F171, F175 and F179,
Section 5.7 ub (Manual torque boost) for F172, F176 and F180,
and Section 5.14 tHr (Motor electronic thermal protection level 1) for F173, F177 and F181,
respectively.

■ Setting of switching terminals

The V/f1, V/f2, V/f3 and V/f4 switching function is not yet assigned to any terminal. Therefore, it is necessary to assign them to unused terminals.

Ex.) Assigning the V/f switching 1 function to S1 and the V/f switching 2 function to S2.

Title	Function	Adjustment range	setting value
F115	Input terminal function selection 5 (S1)	0~135	28 (V/f switching 1)
F116	Input terminal function selection 6 (S2)	0~135	30 (V/f switching 2)

«An example of the connection of terminals: SW1 set to sink logic»

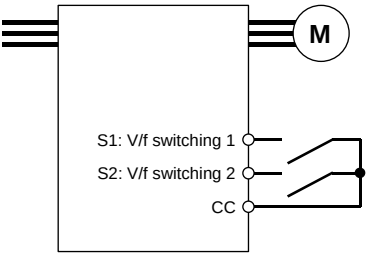

S1-CC	S2-CC	V/f	Parameters selected
OFF	OFF	1	Base frequency 1 : uL Base frequency voltage 1 : uLu Manual torque boost 1 : ub Thermal protection 1 : tHr
ON	OFF	2	Base frequency 2 : F170 Base frequency voltage 2 : F171 Manual torque boost 2 : F172 Thermal protection 2 : F173
OFF	ON	3	Base frequency 3 : F174 Base frequency voltage 3 : F175 Manual torque boost 3 : F176 Thermal protection 3 : F177
ON	ON	4	Base frequency 4 : F178 Base frequency voltage 4 : F179 Manual torque boost 4 : F180 Thermal protection 4 : F181

Note1:V/f switching is not able to change during the inverter running,. Always stop the inverter and then switch.
It is necessary to wait for 0.1 second and over until start up inverter from switch the V/f switching.

Note2:Select V/f1 when using the vector control and the V/f-5 point setting.
Selecting V/f2,.V/f3, or V/f4 disables vector control but enables the V/f constant control.

Note3:By using “My function,” torque limits and acceleration/deceleration modes can be switched along with V/f switching.

Note4:With the operation panel or communication, the panel acceleration/deceleration selection (F504) can be set.
* This function is active only in operation panel operation mode.

6.5 V/f 5-point setting

F190	: V/f 5-point setting VF1 frequency	F196	: V/f 5-point setting VF4 frequency
F191	: V/f 5-point setting VF1 voltage	F197	: V/f 5-point setting VF4 voltage
F192	: V/f 5-point setting VF2 frequency	F198	: V/f 5-point setting VF5 frequency
F193	: V/f 5-point setting VF2 voltage	F199	: V/f 5-point setting VF5 voltage
F194	: V/f 5-point setting VF3 frequency		
F195	: V/f 5-point setting VF3 voltage		

⇒ For details, refer to Section 5.6,5).

6.6 Speed command switching

6.6.1 Using two types of frequency (speed) commands

FMOd : Frequency setting mode selection 1
F200 : Frequency priority selection
F207 : Frequency setting mode selection 2
F208 : Speed command priority switching frequency

- **Function**
  These parameters switch two types of frequencies
  - Automatic switching by parameter setting
  - Automatic switching by means of switching frequencies
  - Switching with input terminal

6

1) Switching with input terminal board (F200=0)

Reference can be switched if the frequency priority switching function is assigned to a terminal.

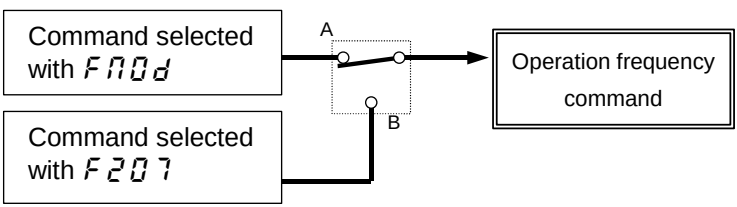

A : Selects the command set with parameter FMOd. – Operation frequency command switching terminal OFF
B : Selects the command set with parameter F207. – Operation frequency command switching terminal ON

Ex.) When the frequency priority switching function is assigned to terminal S3.

Title	Function	Adjustment range	Example of setting
F117	Input terminal function selection 7 (S3)	0~135	104(Operation frequency command switching)

«An example of the connection of terminals: SW1 set to sink logic»

		Speed command
S3 / CC	OFF	**Command selected with FMOd**
	ON	**Command selected with F207**

2) Automatic switching by means of switching frequencies (F200= 1)

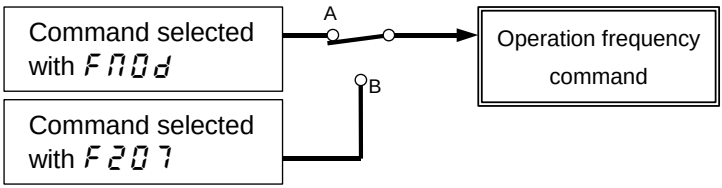

A: If the frequency set with FM0d is higher than that set with F208 ····· Priority is given to the command set with FM0d.

B: If the frequency set with FM0d is equal to or lower than that set with F208 ····· Priority is given to the command set with F207.

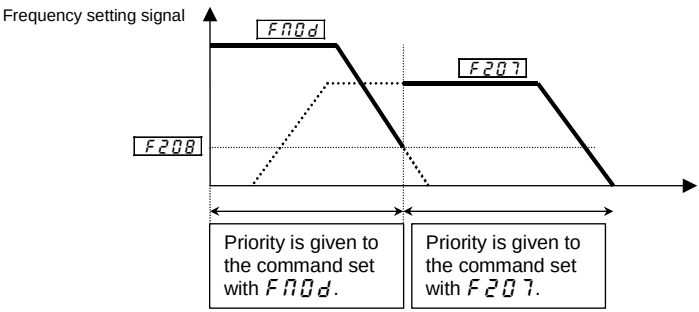

[Parameter setting]

Title	Function	Adjustment range	Default setting
FM0d	Frequency setting mode selection 1	1:VI/II (voltage/current input) 2:RR/S4 (potentiometer/voltage input) 3:RX (voltage input) 4:Operation panel input enabled (including LED/LCD option input) 5:2-wire RS485 communication input 6:4-wire RS485 communication input 7:Communications option input 8:Optional AI1 (differential current input) 9:Optional AI2 (voltage/current input) 10:Up/Down frequency 11:Optional RP pulse input 12:Optional high-speed pulse input 13: - (Unsupported)	2
F200	Frequency priority selection	0:FM0d/F207 terminal switching (input terminal function selection 104, 105) 1:FM0d/F207 frequency switching (switching with F208)	0
F207	Frequency setting mode selection 2	Same as FM0d (1~ 13)	1
F208	Speed command priority switching frequency	0.1~FH Hz	0.1

6.7 Operation frequency

6.7.1 Start frequency/Stop frequency

F240 : Start frequency setting

F243 : Stop frequency setting

• **Function**

The frequency set with the parameter F240 is put out as soon as operation is started.
Use the F240 parameter when a delay in response of starting torque according to the acceleration/deceleration time is probably affecting operation. Setting the starting frequency to a value from 0.5 to 2.0Hz (max. 5Hz) is recommended. The occurrence of an overcurrent can be suppressed by setting this frequency below the rated slippage of the motor. If 0 speed torque is needed (Pt = 7, 8), set F240, F243 at 0.0Hz.

- At start up : frequency set with F240 is put out immediately.
- At stop : The output frequency drops to 0Hz immediately by the frequency set with F243.

[Parameter setting]

Title	Function	Adjustment range	Default setting
F240	Starting frequency setting	0.0~10.0 Hz	0.1
F243	Stop frequency setting	0.0~30.0 Hz	0.0

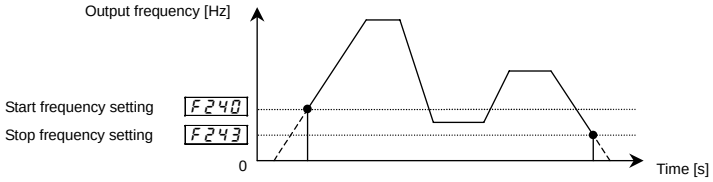

Note: Set these parameters so that the start frequency F240 is higher than the stop frequency F243 .
If the F240 -set frequency is lower than the F243 -set frequency, the reference frequency must be higher than the F243-set frequency to start the motor.
If both F240 and F243 are set to 0.0 Hz, the motor will start even if the frequency set is 0.0Hz.

6.7.2 Run/Stop control with frequency setting signals

F241 : Operation start frequency

F242 : Operation start frequency hysteresis

• **Function**

The Run/Stop of operation can be controlled simply with frequency setting signals.

[Parameter setting]

Title	Function	Adjustment range	Default setting
F241	Operation starting frequency	0.0~FH	0.0
F242	Operation starting frequency hysteresis	0.0~30.0 Hz	0.0

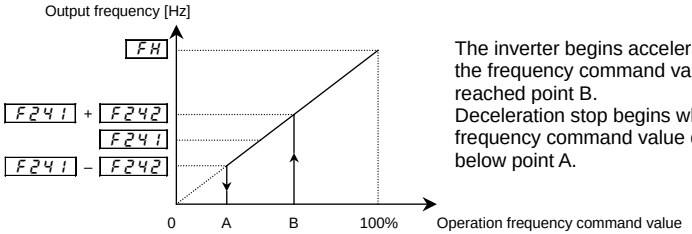

The inverter begins accelerating after the frequency command value has reached point B.
Deceleration stop begins when the frequency command value decreases below point A.

6.7.3. Frequency setting signal 0Hz dead zone handling function

F244 : Frequency command dead band

• **Function**
If the frequency is set to 0Hz by means of an analog signal so that the motor shaft can be locked by sensor vector control (Pt = 7, 8) the frequency may not always be 0Hz because of drift or offset.
In such a case, this parameter allows you to correctly set the operation frequency command to 0Hz. If the operation frequency command is below the frequency setting signal 0Hz insensitive frequency set with F244, parameter F244 will adjust the operation frequency command to 0Hz.

[Parameter setting]

Title	Function	Adjustment range	Default setting
F244	Frequency command dead band	0.0~5.0 Hz	0.0

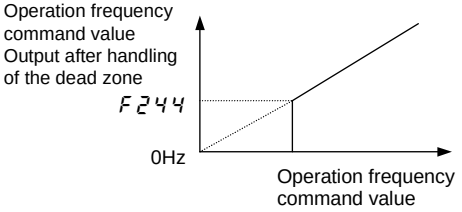

Note 1: This function is invalid to preset the speed operation frequency command.
Note 2: It is effective as frequency instruction is to the frequency reference chosen by F00d, F207, communication,etc.
Note 3: The addition and multiplication of the override function is carried out to the frequency in which this function operated.

6.8 DC braking

6.8.1 DC braking

F250 : DC braking start frequency
F251 : DC braking current
F252 : DC braking time
F253 : Forward/reverse DC braking priority control

• **Function**
A large braking torque can be obtained by applying a direct current to the motor. These parameters set the direct current applied to the motor, the application time and the start frequency.

[Parameter setting]

Title	Function	Adjustment range	Default setting
F250	DC braking start frequency	0.0~120.0 Hz	0.0
F251	DC braking current	0~100 %	50
F252	DC braking time	0.0~20.0 sec.	1.0
F253	Forward/reverse DC braking priority control	0:Disabled, 1:Enabled	0

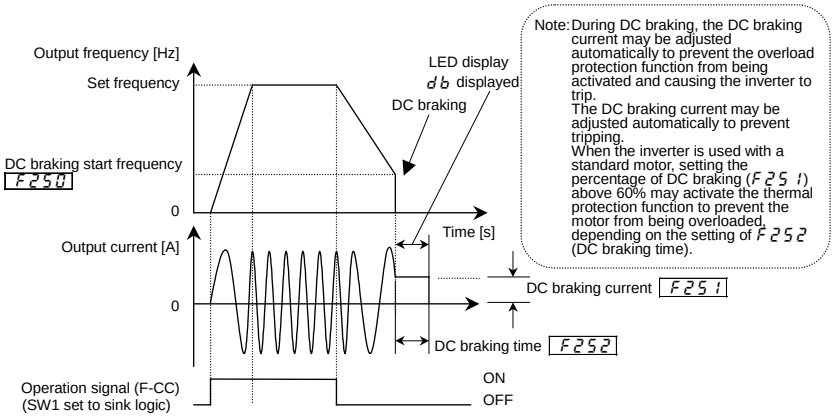

<DC braking start conditions>

The forward/reverse DC braking priority control function F253 recognizes certain conditions such as stop commands from the inverter, and is activated when the output frequency goes down below the DC braking start frequency set with F250. In this case, the conditions under which DC braking starts include not only the issue of a start or stop command from the operation panel or an external input device, but also a fall in the reference frequency below the value set with F243 (stop frequency setting) or a fall in the output frequency below the operation stop frequency setting F243.

[DC braking under normal conditions] (Forward/reverse run DC braking priority control F253=0 [Disabled])

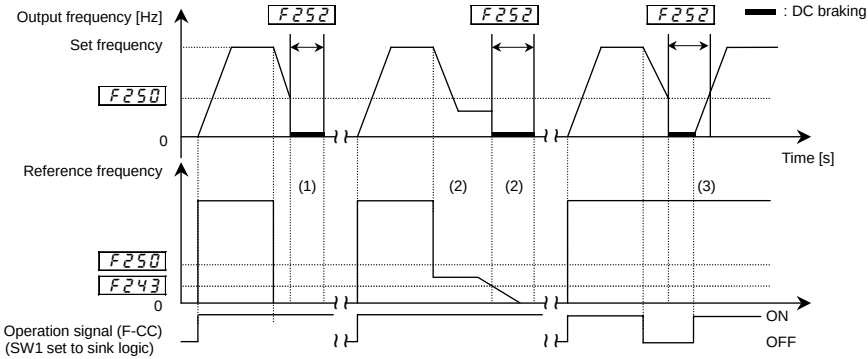

(1) If F250 and F243 > reference frequency : DC braking
(2) If F250 > reference frequency > F243 : Operation at the command frequency
If F250 and F243 > reference frequency : DC braking
(3) If an operation command is entered during DC braking : DC braking is discontinued to restart the operation.

[Priority to DC braking during forward/reverse operation] (Forward/reverse run DC braking priority control F253= 1[Enabled])

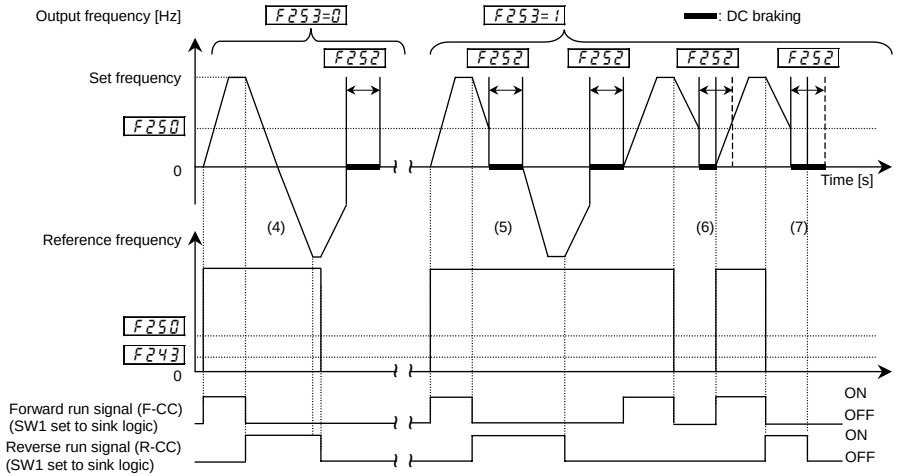

«SW1 set to sink logic»

(4) During normal forward/reverse run (F253=0) : Not recognized as a stop command, so that the DC braking is not active.

(5) If a reverse run (or forward) command is entered during forward run (or reverse) (F253= 1) : DC braking when the frequency set with F250 decreases below the reference frequency during deceleration.

(6) If an operation command is entered during DC braking : RUN command has a priority.

(7) If an operation command is changed from ON to OFF during DC braking, DC braking is discontinued to stop the operation.

6.8.2 Motor shaft fixing control

F254 : Motor shaft fixing control

• **Function**

This function is used to prevent the motor from running unexpectedly after the motor is stopped because it's shaft is not restrained or to preheat the motor.

[Parameter setting]

Title	Function	Adjustment range	Default setting
F254	Motor shaft fixing control	0:Disabled, 1:Enabled	0

If the motor shaft fixing control parameter F254 is set at 1, DC braking continue at half a braking rate of that set with F251 to retain the motor after it has come to a full stop by DC braking. To terminate the motor shaft fixing control cut off the standby signal (ST signal).

Note: This function doesn't operate after a DC braking command is entered by control input terminal signal.

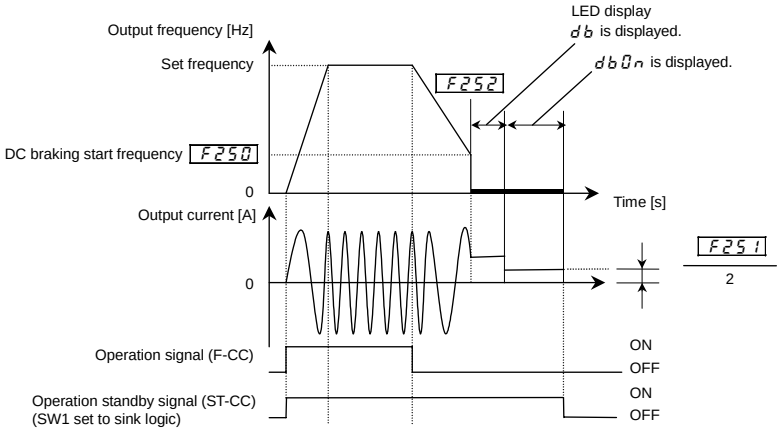

Note 1: If the motor shaft fixing control parameter F254 is set at 1 (enabled) when the output frequency is below the DC braking start frequency F250 and terminals ST-CC are closed (ON), the DC braking function is activated and the motor shaft fixing control continues regardless of the setting of the DC braking time parameter F252.

Note 2: If a power failure occurs during motor shaft fixing control and the motor starts to a coast, motor shaft fixing control will be canceled. Also, if the inverter trips during motor shaft fixing control and is restored to working order by the retry function, motor shaft fixing control will be canceled.

6

6.8.3 Function of issuing a 0Hz command during a halt

F255 : 0Hz command output selection

• **Function**

This function controls the motor in the zero-speed state at the time of stop. If this function is set up, the 0Hz command will be put out instead of DC braking at the time of a stop,and a motor will be controlled in the setting time stop state. The monitor display serves as db during this control operation. This function operates only at the time of vector control with a sensor (Pt = 7, 8).

Refer to DC braking (Section 6.8.1) for conditions of operation. The position of DC braking is served as an operation which sets the operation frequency command to 0Hz.

[Parameter setting]

Title	Function	Adjustment range	Default setting
F255	0Hz command output selection	0: Standard (DC braking) 1: 0Hz command	0
F250	DC braking starting frequency	0.0~120.0 Hz	0.0
F252	DC braking time	0.0~20.0 sec.	1.0

Note 1: This function doesn't operate when F250=0.0.

Note 2: If this function is set up, motor shaft fixing control F254 cannot be used.

Note 3: This function doesn't operate at the time of a torque control.

Note 4: This function doesn't operate except Pt = 7, 8 of the vector control mode with a sensor. In order to use this function, the option board for PG feedback is required. When expect vector control with a sensor Pt = 7, 8, this function operate as DC braking mode (It is the same as F255=0 setting).

Note 5: Since the reference frequency that will suspend the motor abruptly from the state of high rotation if (F250) is set up highly, please be careful. A trip may occur according to load conditions.

Note 6: This parameter has a function similar to the DC braking function, which is activated by a command from the terminal board or an external control device (input terminal function 22 or 23, or command from external control device). To the DC braking function which will be activated if F261 (jog run stop pattern) is set to 2 (DC braking), and to the DC braking function which will be activated if F603 (emergency stop pattern) is set to 2 (DC braking), but it issues 0Hz commands instead of DC braking commands.

6.9 Auto-stop in case of lower-limit frequency continuous operation (Sleep/Wake-up function)

F256 : Time limit for lower-limit frequency operation

• **Function**

If operation is carried out continuously at a frequency below the lower-limit frequency (LL) for the period time set F256, theinverter will automatically slow down the motor to a stop.

"LStP" is always displayed on the operation panel. (Blinking alternately)

The auto-stop function will be disabled when the frequency command value reaches over the lower limit frequency (LL)+0.2Hz or the operation command is turned to off.

[Parameter setting]

Title	Function	Adjustment range	Default setting
F256	Auto-stop in case of lower-limit frequency continuous operation	0.0:None 0.1 ~ 600.0 sec.	0.0

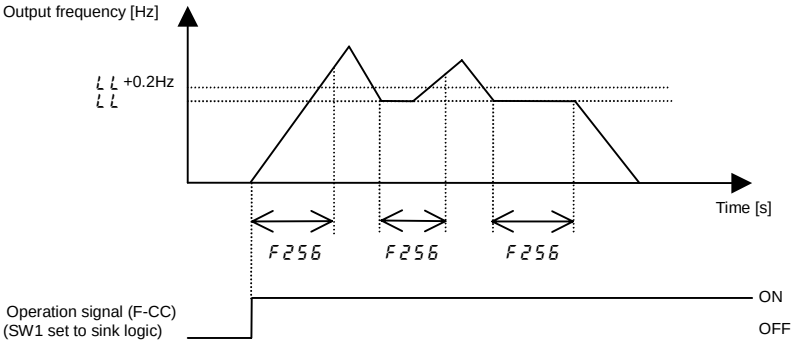

Note: This function is enabled even at the start of operation and during switching between forward and reverse run.

6.10 Jog run mode

F260 : Jog run frequency
F261 : Jog run stop pattern
F262 : Operation panel jog run mode

• **Function**
Use the jog run parameters to operate the motor in jog mode. Input of a jog run signal generates a jog run frequency output at once, irrespective of the designated acceleration time.
Also, you can choose an operation panel start/stop mode between the ordinary start/stop mode and the jog run start/stop mode.

The jog run function needs to be assigned to an input terminal.
When assigning it to the S3 terminal, set F117 to 18.
The motor can be operated in jog run mode while the jog run setting terminals are connected (S3-CC: ON).

[Parameter setting]

Title	Function	Adjustment range	Default setting
F260	Jog run frequency	F240~20.0 Hz	5.0
F261	Jog run stop pattern	0:Deceleration stop, 1: Coast stop, 2:DC braking stop	0
F262	Operation panel jog run mode	0:Disabled, 1:Operation panel jog run mode enabled	0

<Examples of jog run (SW1 set to sink logic) >

S3-CC (JOG) ON + F-CC ON: Forward jog run

S3-CC (JOG) ON + R-CC ON: Reverse jog run

(**Normal operation frequency signal input + F-CC ON: Forward run, Normal operation frequency signal input + R-CC ON: Reverse run**)

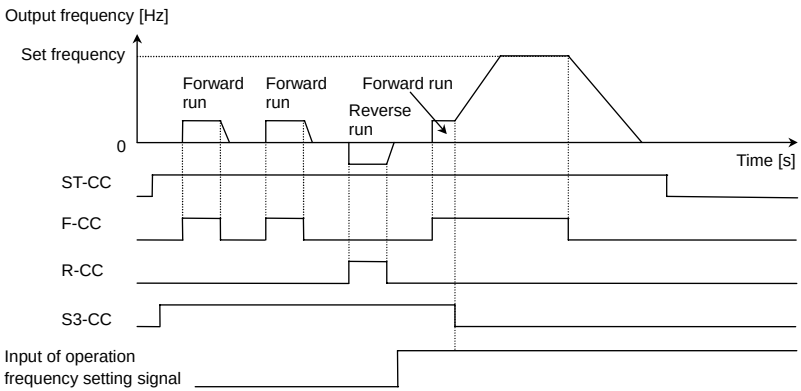

- The jog run setting terminal (S3-CC) is enabled when the operation frequency is below the jog run frequency. This connection does not function at an operation frequency exceeding the jog run frequency.
- The motor can be operated in jog mode while the jog run setting terminals are connected (S3-CC: ON).
- Jog run has priority, even when a new operation command is given during operation.
- Even during panel operation (CMOd = 1), the inverter can be switched forcibly to jog run mode by turning on or off the input terminal if parameter F106 (input terminal priority selection) is set to 1 and the jog run setting function (18, 19) is assigned to the input terminal.
- Even for F261=0 or 1, an emergency DC braking becomes enabled when setting F603=2.
- If a forward run command and a reverse run command are entered simultaneously while F105 (priority selection (both F-CC and R-CC are ON)) is set to 0 (reverse run), operation modes are switched as follows: forward jog run → deceleration stop (jog frequency → 0Hz) → reverse jog run. Keep this in mind.
- The jog frequency is not restricted by the upper limit frequency (UL).

[Setting of jog run setting terminal (S3-CC)]

Assign control terminal S3 ([14: preset speed 3] in default setting) as the jog run setting terminal.

Title	Function	Adjustment range	Example of setting
F117	Input terminal function selection 7 (S3)	0~135	18 (Jog run setting terminal)

Note: During the jog run mode, there is LOW (low speed detection signal) output but no RCH (designated frequency reach signal) output, and PID control does not work.

•When the inverter is in panel jog mode, pressing the ∧ key displays FJOG, while pressing the ∨ key displays rJOG.

•When FJOG is displayed, the inverter will be placed in forward jog run mode as long as the RUN key is held down.

•When rJOG is displayed, the inverter will be placed in reverse jog run mode as long as the RUN key is held down.

•During jog run, the direction of rotation can be changed using the ∧ and ∨ keys. Press the ∧ key to run the motor in the forward direction, or press the ∨ key to run it in the reverse direction.

•If you press and hold down the RUN key for 20 seconds or more, the key failure alarm "E-17" will be displayed.

The figure below shows the relationship between the operation panel jog run mode and each of the other modes.

Pressing the MODE key, which will move the inverter through each of the modes.

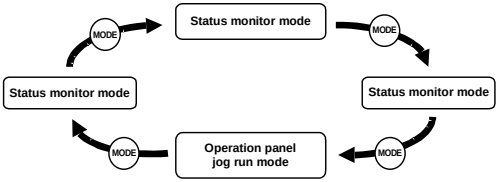

Note1: When the inverter is in operation (RUN key lamp is lit) or when an operation command is issued (RUN key lamp is lit), the inverter cannot be switched to operation panel jog run mode.

Note 2: When parameter F106 (input terminal priority selection) is set to 1, the inverter does not display any message saying that it is in panel jog run mode.

6.11 Setting frequency via external contact input (Up/Down frequency setting)

F264 : Input from external contacts - Up response time
F265 : Input from external contacts - Up frequency step
F266 : Input from external contacts - Down response time
F267 : Input from external contacts - Down frequency step
F268 : Initial Up/Down frequency
F269 : Initial Up/Down frequency rewriting

• **Function**
These parameters are used to set the output frequency by means of a contact signal from the external control device.

[Parameter setting]

Title	Function	Adjustment range	Default setting
F264	Input from external contacts - Up response time	0.0 ~ 10.0 s	0.1
F265	Input from external contacts - Up frequency step	0.0 ~ FH Hz	0.1
F266	Input from external contacts - Down response time	0.0 ~ 10.0 s	0.1
F267	Input from external contacts - Down frequency step	0.0 ~ FH Hz	0.1
F268	Initial Up/Down frequency	LL ~ UL Hz	0.0
F269	Initial Up/Down frequency rewriting	0:Not changed 1:Setting of F268 changed when power is turned off.	1

These functions are operative when parameter FMOd (frequency setting mode selection 1) is set to 10 or parameter F207 (frequency setting mode selection 2) is set to 10.

■ **Adjustment with continuous signals (Parameter setting example 1)**

Set parameters as follows to adjust the output frequency up or down in proportion to the frequency adjustment signal input time:

Panel frequency incremental gradient = F265/F264 setting time

Panel frequency decremental gradient = F267/F266 setting time

Set parameters as follows to adjust the output frequency up or down almost in synchronization with the adjustment by the panel frequency command:

F264 = F266 = 1

(ACC (or F500) /FH) ≦ (F265/F264 setting time)

(dEC (or F501) /FH) ≦ (F267/F266 setting time)

«Sample sequence diagram 1: Adjustment with continuous signals»

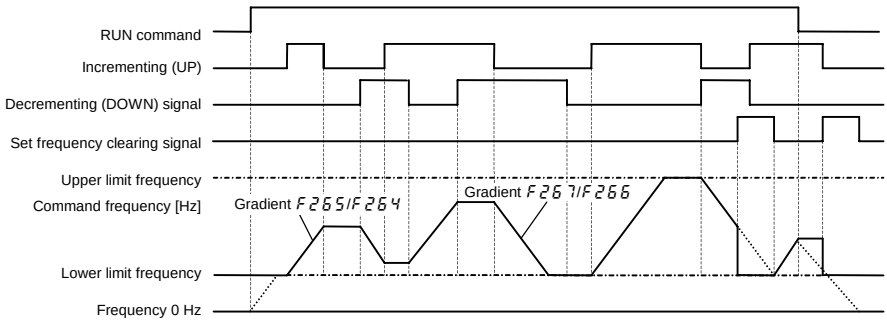

The dotted line represents the actual output frequency.

■ **Adjustment with pulse signals (Parameter-setting example 2)**

Set parameters as follows to adjust the frequency in steps of one pulse:

F264, F266 ≦ Pulse ON time

F265, F267 = 1 Frequency obtained with each pulse

* The inverter does not respond to any pulses with an ON time shorter than set with F264 or F266. 12ms or more of clearing signal is allowed.

«Sample sequence diagram 2: Adjustment with pulse signals»

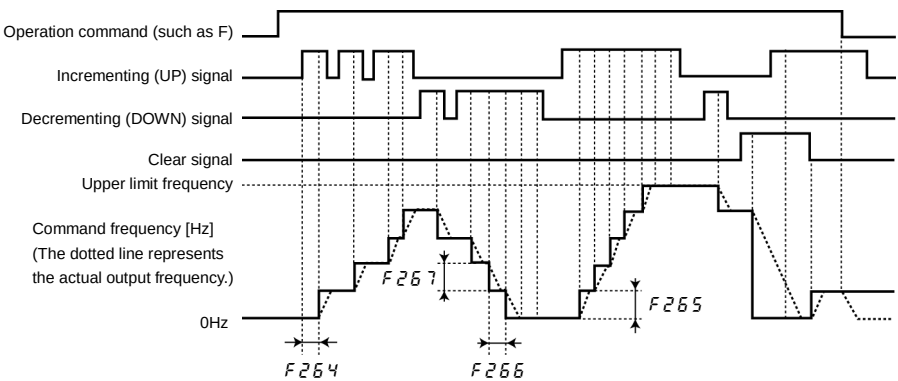

■ **If two signals are input simultaneously**

- If a clear single and an up or down signal are input simultaneously, priority will be given to the clear signal.
- If up and down signals are input simultaneously, the frequency will be increased or reduced by the difference between the settings of F265 and F267. For example, if the F265 setting is larger, the frequency will be increased by the value obtained by subtracting the setting of F265 from that of F267.

■ **Setting of the initial Up/Down frequency**

To adjust the frequency start at a specified frequency other than 0.0 Hz (default initial frequency) after turning on the inverter, specify the desired frequency using F268 (initial Up/Down frequency).

■ **Change of the initial Up/Down frequency**

To make the inverter automatically save the frequency immediately before it is turned off and start operation at that frequency next time power is turned on, set F269 (change of initial Up/Down frequency) to 1 (which changes the setting of F268 when power is turned off).
Keep in mind that the setting of F268 is changed each time power is turned off.

■ **Frequency adjustment range**

The frequency can be set from 0.0 Hz to FH (Maximum frequency). The lower limit frequency will be set as soon as the set frequency clearing function (function number 92, 93) is entered from the input terminal.

■ **Minimum unit of frequency adjustment**

If F702 (Frequency free unit magnification) is set to 1.00, the output frequency can be adjusted in steps of 0.01Hz.

6.12 Jump frequency - jumping resonant frequencies

6

F270 : Jump frequency 1
F271 : Jumping width 1
F272 : Jump frequency 2
F273 : Jumping width 2
F274 : Jump frequency 3
F275 : Jumping width 3

- **Function**
  Resonance due to the natural frequency of the mechanical system can be avoided by jumping the resonant frequency during operation. During jumping, hysteresis characteristics with respect to the jump frequency are given to the motor.

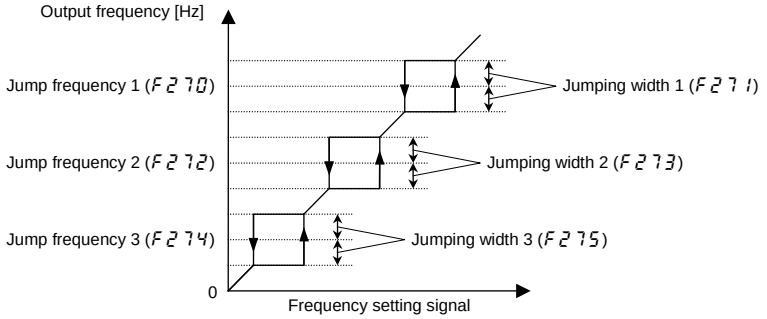

[Parameter setting]

Title	Function	Adjustment range	Default setting
F270	Jump frequency 1	0.0~FH Hz	0.0
F271	Jumping width 1	0.0~30.0 Hz	0.0
F272	Jump frequency 2	0.0~FH Hz	0.0
F273	Jumping width 2	0.0~30.0 Hz	0.0
F274	Jump frequency 3	0.0~FH Hz	0.0
F275	Jumping width 3	0.0~30.0 Hz	0.0

If the upper limit frequency (UL) is within jump frequency range,
it is limited to the lowest frequency in the jump frequency range.

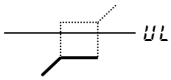

If the lower limit frequency (LL) is within jump frequency range,
it is limited to the highest frequency in the jump frequency range.

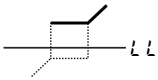

Do not overlap upper limit frequency (UL) and lower limit frequency (LL)
within jump frequency range.
If they are overlapped, it is operated lowest jump frequency.

Do not overlap two or more jump frequency ranges, or
it cannot be operated within normal range.

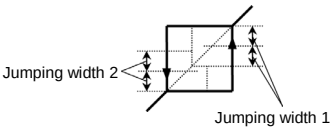

During acceleration or deceleration,
the jumping function is disabled for the operation frequency.

6.13 Preset speed operation frequencies

6.13.1 Preset speed operation frequency 8 to 15

F287~F294 : Preset speed operation frequencies 8 to 15

⇒ For details, refer to Section 5.12.

6.13.2 Forced operation control

F294 : Preset speed operation frequency 15 (Forced operation frequency)

• **Function**
Forced operation control is used when operating the motor at the specified frequency in case of an emergency. If forced operation control is assigned to the terminal board selection parameter and a forced operation control signal is given, the motor will be operated at the frequency specified with F294 (preset speed operation frequency 15). (When the input terminal board selection parameter is set to 58 or 59.)

6.14 Trip-less intensification

6.14.1 Retry function

F303 : Retry selection (selecting the no. of times)

⚠ Warning

Mandatory	• Stand clear of motors and equipment. The motor and equipment stop when the alarm is given, selection of the retry function will restart them suddenly after the specified time has elapsed. This could result in unexpected injury. • Take measures for safety, e.g. attach a cover to the motor, to prevent accidents if the motor suddenly restarts.

• **Function**
This parameter resets the inverter automatically when the inverter gives a trip. During the retry mode, the motor speed search function operated automatically as required and thus allows smooth motor restarting.

[Parameter setting]

Title	Function	Adjustment range	Default setting
F303	Retry selection (selecting the no. of times)	0: Deselect, 1~10 times	0

The likely causes of tripping and the corresponding retry processes are listed below.

Cause of tripping	Retry process	Canceling conditions
Momentary power failure Overcurrent Overvoltage Overload	Up to 10 times in succession 1st retry : About 1 sec after tripping 2nd retry : About 2 sec after tripping 3rd retry : About 3 sec after tripping ... 10th retry : About 10 sec. after tripping	The retry function will be canceled at once if tripping is caused by an unusual event other than momentary power failure, overcurrent, overvoltage or overload. This function will also be canceled if a retry is not successful within the specified number of times.

Trips covered by the retry function

• OC 1, 2, 3 : Overcurrent	• OL 1: Inverter overload	• OH : Overheat
• OC 1P, 2P, 3P : Overcurrent in DC section or overheating of devices	• OL 2: Motor overload	• SOUt : PM motor step-out
• OP 1, 2, 3 : Overvoltage	• OLr : Braking resistor overload	

The retry function is disabled in the following unusual events:

- OCA 1, 2, 3: Arm overcurrent at start-up
- EPH 1 : Input phase failure
- EPH0 : Output phase failure
- OCL : Loaded side overcurrent at start time
- OH2 : External thermal error
- UC : Low current
- UP 1 : Voltage drop in main circuit
- Ot : Overtorque
- EF 1, EF2 : Ground fault
- E : Emergency stop
- EEP 1, 2, 3: EEPROM error
- Err2 : Main RAM error
- Err3 : Main ROM error
- Err4 : CPU trip
- Err5 : Interruption of operation command from external control device
- Err6 : Gate array fault
- Err7 : Output current detector error
- Err8 : Optional unit error
- E- 10~26
- Others (Other than trips covered by the retry function)

Protective operation detection relay signals (FLA, FLB, FLC terminal signals) are not sent during use of the retry function. (factory default setting)

A virtual cooling time is provided for overload tripping (OL 1, OL2, OLr).

⇒ See Section 13.2 for the virtual cooling time.

In this case, the retry function operates after the virtual cooling time and retry time.

In the event of overvoltage tripping (OP 1~OP3), re-tripping may result unless the DC voltage decreases below a predetermined level.

In the event of overheating-caused tripping (OH), re-tripping may result unless the internal temperature decreases below a predetermined level, since the internal temperature detection function of the inverter works.

Even when trip retention selection parameter (F602) is set to 1, the retry function is enabled by F303 setting.

During retry the blinking display will alternate between rtry and the monitor display specified by parameter monitor display selection parameter F710.

The number of retries will be cleared if the inverter is not tripped for the specified period of time after a successful retry. "A successful retry" means that the inverter output frequency reaches the command frequency without causing the inverter to re-trip.

At the occurrence of a trip, the rotational speed of the motor is measured and, after the motor is restarted, it's speed is regulated to the speed measured.

6.14.2 Avoiding overvoltage tripping

F305 : Overvoltage limit operation
F319 : Regenerative over-excitation upper limit
F469 : Overvoltage limit constant
F626 : Overvoltage limit operation level

• **Function**
These parameters are used to automatically control the output frequency and prevent the motor from tripping because of overvoltage due to a rise in the voltage in the DC section during deceleration or constant speed operation. Note that the deceleration time may be prolonged when the overvoltage limiting function is activated.
When operating a motor in automatic torque boost mode or vector control mode (Pt = 2,3,4,7,or 8) at 200V-55kW or more and 400V-90kW or more models, if F305 set 2 or 3,this function same as F305 set 0.

Overvoltage limit operation level

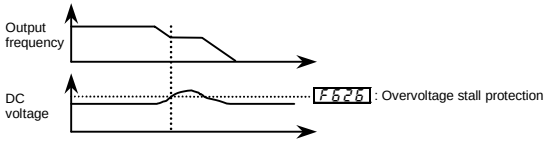

[Parameter setting]

Title	Function	Adjustment range	Default setting
F305	Overvoltage limit operation	0:Enabled 1:Disabled 2:Enabled (quick deceleration) 3:Enabled (dynamic quick deceleration)	2
F319	Regenerative over-excitation upper limit	100~ 160 % [Note]	140
F469	Overvoltage limit constant	0:Automatic 1~ 1000 ms	0
F626	Overvoltage limit operation level	100~ 150 % [Note]	134

Note: 100% corresponds to an input voltage of 200V for 200V models or to in an input voltage of 400V for 400V models.

If F305 is set to 2 (quick deceleration), the inverter will increase the voltage to the motor (over-excitation control) to increase the amount of energy consumed by the motor when the voltage reaches the overvoltage protection level, and therefore the motor can be decelerated more quickly than normal deceleration.

If F305 is set to 3 (dynamic quick deceleration), the inverter will increase the voltage to the motor (over-excitation control) to increase the amount of energy consumed by the motor as soon as the motor begins to slow down, and therefore the motor can be decelerated still more quickly than quick deceleration.

The parameter F319 is used to adjust the maximum energy that the motor consumes during deceleration, and if the inverter is tripped during deceleration because of an overvoltage, specify a larger value. When F305 is set 2 to 3,this function works.

Parameter F469 is able to adjust the filter time constant of the overvoltage limitation.

This parameter is effective at only V/f control mode(Pt =0,1,5).

Parameter F626 serves also as a parameter for setting the regenerative braking level (see section 5.19.).

6.14.3 Output voltage adjustment/Supply voltage correction

uLu : Base frequency voltage 1 (output voltage adjustment)
F307 : Base frequency voltage selection (supply voltage correction)

• **Function**
Base frequency voltage 1 (output voltage adjustment)
This parameter is used to set the voltage for the base frequency 1 uL. It can also be used to prevent the base frequency over uLu from being put out even if the voltage is higher than the voltage set is applied. (This parameter is operative when F307 is 2 or 3.)
Base frequency voltage selection (correction of supply voltage)
The F307 parameter maintains a constant V/f ratio, even when the input voltage decreases. The torque during low-speed operation is prevented from decreasing.

○Supply voltage correction ····· Maintains a constant V/f ratio, even when the input voltage fluctuates.
○Output voltage adjustment ····· Limits the voltage at frequencies exceeding the base frequency. Note that no limit is imposed on the output voltage if the supply voltage is not compensated.

[Parameter setting]

Title	Function	Adjustment range	Default setting
uLu	Base frequency voltage 1 (output voltage adjustment)	200V class: 50~330 V 400V class: 50~660 V	200V class: 200 400V class: 400
F307	Base frequency voltage selection (correction of supply voltage)	0:Without voltage compensation (limitless output voltage) 1: With voltage compensation (limitless output voltage) 2: Without voltage compensation (limited output voltage) 3: With voltage compensation (limited output voltage)	0

If F307 is set to 0 or 2, the output voltage will change in proportion to the input voltage.
Even if the base frequency voltage (uLu) is set above the input voltage, the output voltage will not exceed the input voltage.
The rate of voltage to frequency can be adjusted according to the rated motor capacity. For example, setting F307 to 3 prevents the output voltage from increasing, even if the input voltage changes when the operation frequency exceeds the base frequency.
When the V/f control mode selection parameter (Pt) is set to any number between 2~4 or 6~8, the supply voltage is corrected regardless of the setting of F307.

[F307=0: Supply voltage uncorrected, output voltage unlimited]

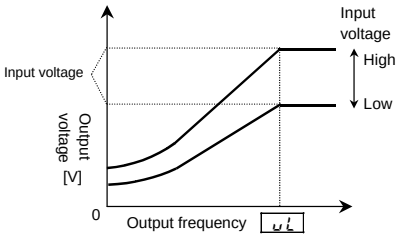

* The above applies when V/f control mode selection parameter Pt is set to 0, 1 or 6.

$$\frac{uLu}{\text{Rated voltage}} > 1$$ the output voltage can be prevented from exceeding the input voltage.

[F307= 1: Supply voltage corrected, output voltage unlimited]

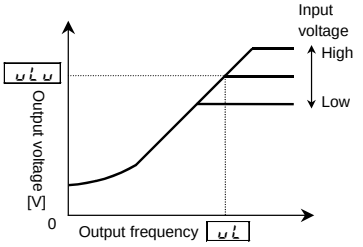

* Note that a voltage higher than uLu is applied at output frequencies over the base frequency uL, even if uLu is set below the input voltage.

[F307=2: Supply voltage uncorrected, output voltage limited]

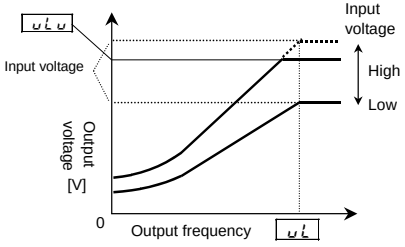

* The above applies when V/f control mode selection parameter Pt is set to 0, 1 or 6.

[F307=3: Supply voltage corrected, output voltage limited]

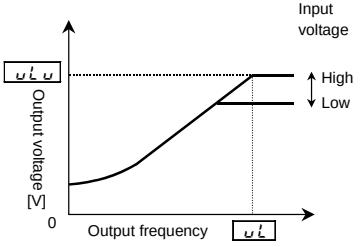

$$\frac{uLu}{\text{Rated voltage}} > 1$$ the output voltage can be prevented from exceeding the input voltage.

Note: Rated voltage is fixed for 200V class at 200V and 400V class at 400V.

6.14.4 Reverse run prohibition

F311 : Reverse run prohibition selection

• **Function**
This function prevents the motor from running in the forward or reverse direction when it receives the wrong operation signal.

[Parameter setting]

Title	Function	Adjustment range	Default setting
F311	Reverse-run prohibition selection	0:Permit all, 1:Prohibit reverse run 2:Prohibit forward run	0

Warning!!
• If an operation command is entered to rotate the motor in the direction prohibited for the preset speed operation with the mode or forced jog operation, this parameter will cancel the command regardless of operation mode.
• If the motor constant is not set properly while vector control mode or automatic torque boost mode is selected, the motor may turn in the reverse direction. The number of revolutions that correspond to the slip frequency, in these modes, therefore, the stop frequency (F243) should be set at the same level as the slip frequency. In sensor vector control mode (Pt=7, 8), depending on the setting of Uus, the motor restarted may rotate in the direction opposite to the prohibited direction regardless of the setting of this parameter.

6

6.14.5 Output voltage waveform selection

F313 : Output voltage waveform selection

• **Function**
It is an effective function only to the capacity of VFAS1-2550P and above, VFAS1-4900PC and above.
The loss of the inverter is reduced a little by setting it to F313= 1, when using it with the career frequency raised (only as a guide 4kHz and above. However, some magnetic sounds from the motor is different and use it after confirming whether there is problem in noise.

[Parameter setting]

Title	Function	Adjustment range	Default setting
F313	Output voltage waveform selection	0:PWM carrier frequency control 1 1: PWM carrier frequency control 2	0

6.15 Drooping control

F320 : Drooping gain
F321 : Speed at drooping gain 0%
F322 : Speed at drooping gain F320
F323 : Drooping insensitive torque
F324 : Drooping output filter

• **Function**
When multiple inverters and motors are used to operate a system, the load can distribute to them using this function. These parameters allow you to adjust the frequency range, and also insensitive torque and gain.

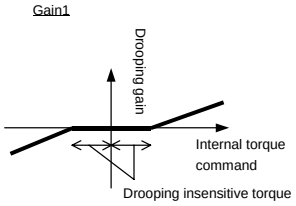

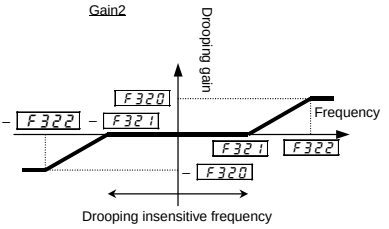

[Parameter setting]

Title	Function	Adjustment range	Default setting
F320	Drooping gain [Note]	0.0~100.0 %	0.0
F321	Speed at drooping gain 0%	0.0~320.0 Hz	0.0
F322	Speed at drooping gain F320	0.0~320.0 Hz	0.0
F323	Drooping insensitive torque	0~100 %	10
F324	Drooping output filter	0.1~200.0 rad/s	100.0

Note: Drooping gain can be changed within a range of 0.1 to 100.0% during operation. When changing the setting to 0.0 (no drooping) or 0.0, stop operation.

- Drooping control can be performed only when Pt is set to 3, 4, 7 or 8.
- When torque over the insensitive torque is applied, the frequency is decreased (during power running) or increased (during regenerative braking).
- The drooping function is operative at frequencies over the frequency set with F321.
- In the frequency range between the frequencies set with F321 and F322, the degree of drooping changes according to the magnitude of frequency.
- The error in drooping insensitive torque increases in the frequency range above the base frequency, and it is therefore recommended that these functions be used at frequencies below the base frequency.
- During drooping control, the output frequency is not restricted by the maximum frequency (FH).

The change in frequency at the time of drooping can be calculated, as described below:

a) Gain by internal torque reference (Gain1)

If internal torque reference (%) ≧ 0

Gain1 = (internal torque reference - dead band [F323]) / 100

Gain1 needs to be set at 0 or a positive number.

If internal torque reference (%) < 0

Gain1 = (internal torque reference + dead band [F323]) / 100

Gain1 needs to be set at 0 or a negative number.

b) Gain by frequency after acceleration (Gain2)

If [F321] < [F322]

| Frequency after acceleration | ≦ Frequency 1 set with [F321]

Gain2 = 0

| Frequency after acceleration | > Frequency 2 set with [F322]

Gain2 = Drooping gain [F320] / 100

If frequency 1 [F321] < | Frequency after acceleration | ≦ Frequency 2 [F322]

$$\text{Gain2} = \frac{\text{Drooping gain } [F320]}{100} \times \left\{ \frac{(|\text{Frequency after acceleration}| - \text{Frequency 1 } [F321])}{(\text{Frequency 2 } [F322] - \text{Frequency 1 } [F321])} \right\}$$

If [F321] ≧ [F322]

| Frequency after acceleration | ≦ Frequency 1 set with [F321]

Gain2 = 0

If | Frequency after acceleration | > Frequency 1 [F321]

Gain2 = Drooping gain [F320] / 100

c) Drooping speed

Drooping speed = base frequency [uL] Note × Gain1 × Gain2

Note: If the base frequency exceeds 100 Hz, count it as 100 Hz.

6.16 Light-load high-speed operation function

- F328 : Light-load high-speed operation selection
- F329 : Light-load high-speed learning function
- F330 : Automatic light-load high-speed operation frequency
- F331 : Light-load high-speed operation switching lower limit frequency
- F332 : Light-load high-speed operation load waiting time
- F333 : Light-load high-speed operation load detection time
- F334 : Light-load high-speed operation heavy load detection time
- F335 : Switching load torque during power running
- F336 : Heavy-load torque during power running
- F337 : Heavy-load torque during constant-speed power running
- F338 : Switching load torque during regenerative braking

⇒ For details, refer to Instruction Manual (E6581327) specified in Section 6.42.

6. 17 Braking function

- F340 : Creeping time 1
- F341 : Braking mode selection
- F342 : Load portion torque input selection
- F343 : Hoisting torque bias input
- F344 : Lowering torque bias multiplier
- F345 : Brake release time
- F346 : Creeping frequency
- F347 : Creeping time 2
- F348 : Braking time learning function

6

• **Function**
These parameters can be used as brake sequences for lifts and similar equipment.
To ensure smooth operation, the motor produces enough torque before the brake is released.

Title	Function	Adjustment range	Default setting
F340	Creeping time 1	0.00~2.50 sec.	0
F341	Braking mode selection	0:Disabled 1:Forward winding up 2:Reverse winding up 3:Horizontal operation	0
F342	Load portion torque input selection	0:Disabled 1:VI/II (voltage/current input) 2:RR/S4 (potentiometer/voltage input) 3:RX (voltage input) 4:F343 enabled 5:2-wire RS485 input enabled 6:4-wire RS485 input enabled 7:Communications option input enabled 8:Optional AI1 (differential current input)	4
F343	Hoisting torque bias input (valid only when F342=4)	-250~250 %	100
F344	Lowering torque bias multiplier	0~ 100 %	100
F345	Brake release time	0.00~2.50 sec.	0.05
F346	Creeping frequency	F240~200.0 Hz	3.0
F347	Creeping time2	0.00~2.50 sec.	0.10
F348	Braking time learning function	0:Disabled 1:Brake signal learning (0 after adjustment)	0

■ Starting procedure

At the run command, the inverter makes the motor produce the torque specified with parameter F343. As soon as a torque output command is issued, a brake release request signal is put out through the brake output terminal. Upon expiration of the brake release time set with F345, the motor starts to accelerate.

■ Stopping procedure

At the stop command, the operation frequency is decreased to the creep frequency set with parameter F346, and put out the braking request after the creep time 1 set with F340. And then, the creep frequency is maintained for the creep time set with F347. While the creep frequency is maintained, the brake release signal is put out through the braking signal output terminal to apply the brake.

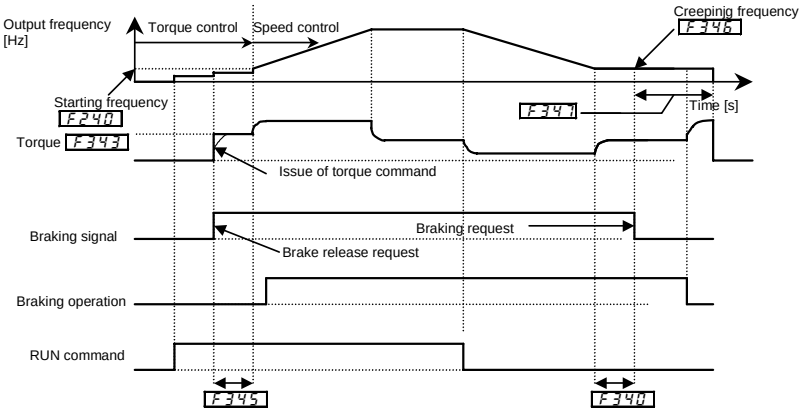

Ex.) When using the OUT1 terminal as the brake signal output terminal

Title	Function	Adjustment range	Example of setting
F130	Output terminal function selection 1 (OUT1)	0~255	68

■ Learning function [F348]

Using this function, rough settings can be made automatically and also parameters F345, F346 and F347 can be set automatically.

After the learning function is set, F342 will be set automatically to 4 and F343 to 100. If necessary, fine adjust the parameter setting manually.

[Learning operation]

Set parameter F348 to 1 and enter an operation command to start learning. (The frequency and "tUn" are displayed alternately.)

Parameter F343 (torque) is set, the brake release timing is calculated, and parameter F345 (release time) is set based on the calculation result. F346 is set automatically according to the motor constant calculated. At the stop of operation, F347 (creep time) are set.

Note1: Learning should be performed under light-load conditions.

Note2: For the braking functions, the pre-excitation time is automatically determined by the inverter from motor-related constants.
When the VFAS1-2037PL is used in combination with a Toshiba 4P-3.7kW-60Hz-200V standard motor, the preliminary excitation time is approximately 0.1 to 0.2 seconds.
Depending on the motor used, the preliminary excitation time may be prolonged.

Note3: When using braking functions, set parameter AU2 (automatic torque boost) to 2 (voltage vector control + auto-tuning 1) or set motor-related parameters F401 to F413.

Note 4: If a counterweight is provided, a learning error may occur. If so, make an adjustment manually.

Note 5: Brake learning (F348= 1) should be carried out for normal rotation if F341 is set to 1 (forward winding), or for reverse rotation if F341 is set to 2 (reverse winding).

■ Torque bias function

Using this function, the load can be started smoothly, by the motor produces enough torque for load portion before the brake is released,

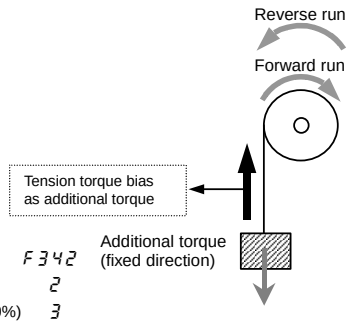

[Selection of external signals]

			F342
Voltage signals	RR/S4-CCA – 0~10V	(0~250%)	2
	RX-CCA – 0~±10V	(-250~250%)	3
	VI/II-CCA – 0~10V	(0~250%)	1
Current signals	VI/II-CCA – 4(0)~20mA	(0~250%)	1

6.18 Acceleration/deceleration suspend function

F349 : Acceleration/deceleration suspend function

F350 : Acceleration suspend frequency

F351 : Acceleration suspend time

F352 : Deceleration suspend frequency

F353 : Deceleration suspend time

• **Function**

Using these parameters, acceleration or deceleration can be suspended to let the motor run at a constant speed. There are two ways to suspend acceleration or deceleration: suspending it automatically by setting the suspend frequency and time using parameters, and suspending it by means of a signal from an external control device.

These parameters are useful in starting and stopping transfer equipment, textile machines (winders), and so on.

[Parameter setting]

Title	Function	Adjustment range	Setting value
F349	Acceleration/deceleration suspend function	0:Disabled 1:Parameter setting 2:Terminal input	0
F350	Acceleration suspend frequency	0.0~FH Hz	0.0
F351	Acceleration suspend time	0.0~ 10.0 sec.	0.0
F352	Deceleration suspend frequency	0.0~FH Hz	0.0
F353	Deceleration suspend time	0.0~ 10.0 sec.	0.0

Note1: The acceleration suspend frequency (F350) should not be set below the starting frequency (F240).

Note2: The deceleration suspend frequency (F352) should not be set below the stop frequency (F243).

Note3: If the output frequency is lowered by a stall prevention function, the acceleration suspend function may be activated.

1) To suspend acceleration or deceleration automatically

Set the desired frequency with F350 or F352 and the desired time with F351 or F353, and then set F349 to 1.

When the frequency set is reached, the motor stops accelerating or decelerating to rotate at a constant speed.

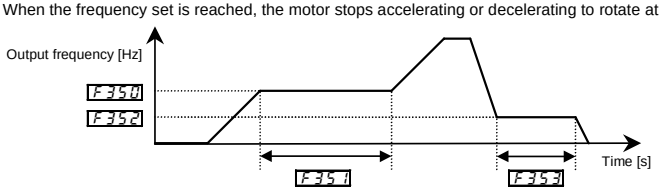

2) To suspend acceleration or deceleration by means of a signal from an external control device
Set 60 for the desired external signal input terminal. As long as ON signals are inputted, the motor continues to rotate at a constant speed.

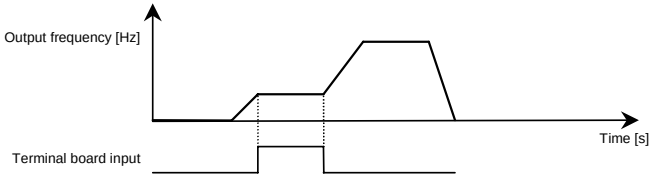

Ex.) When using the RR/S4 terminal as the acceleration/deceleration suspend terminal

Title	Function	Adjustment range	Example of setting
F118	Input terminal function selection 8 (RR/S4)	0~135	60

■ If the stall control function is activated during constant-speed rotation
The frequency drops momentarily as a result of stall control, but the time for which the frequency drops is included in the suspend time.

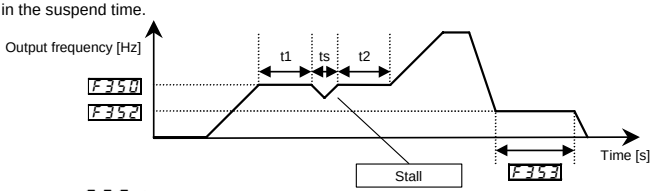

F351 (Momentary acceleration (deceleration) suspend time) = (t1 + t2 + ts)

■ **Stall control**
Refers to the inverter's function of automatically changing the operation frequency when it detects an overcurrent, overload or overvoltage. Using the following parameters, you can specify the way, the stall control is performed for each kind of stall.
Overcurrent stall : F601 (Stall prevention level 1)
Overload stall : OLN (Electronic thermal protection characteristic selection)
Overvoltage stall : F305 (Overvoltage limit operation)

Note: Setting the frequency command at the same frequency as the acceleration suspend frequency (F350) disables the acceleration suspend function.
Similarly, setting the frequency command at the same frequency as the deceleration suspend frequency (F352) disables the deceleration suspend function.

6.19 Commercial power/inverter switching

F354 : Commercial power/inverter switching output selection
F355 : Commercial power/inverter switching frequency
F356 : Inverter-side switching waiting time
F357 : Commercial power-side switching waiting time
F358 : Commercial power switching frequency holding time

• **Function**
These parameters are used to specify whether to send a switching signal to an external sequencer (such as an MC) in the event that the inverter trips. The use of an input signal makes it possible to switch between inverter operation and commercial power operation without stopping the motor.

⇒ For details, see Instruction Manual (E6581364) specified in Section 6.42.
[Parameter setting]

Title	Function	Adjustment range	Default setting
F354	Commercial power/inverter switching output selection	0:Disabled 1:Automatic switching in the event of a trip 2:Commercial power switching frequency setting 3:Commercial power switching frequency setting + automatic switching in the event of a trip [Note1]	0
F355	Commercial power/inverter switching frequency	0~UL Hz	[Note.3]
F356	Inverter-side switching waiting time	0.10~10.00 sec.	According to model ⇒ Refer to page K-46.
F357	Commercial power-side switching waiting time	0.40~10.00 sec.	0.62
F358	Commercial power switching frequency holding time	0.10~10.00 sec.	2.00

Note1: For trips whose causes are displayed with OCL, EF1, EF2 or E, switching is not done automatically.
Note2: Braking function F341 doesn't operate.
Note3: Inverter with a model number ending with -WN, HN: 60.0 -WP: 50.0

[Timing chart (example)]

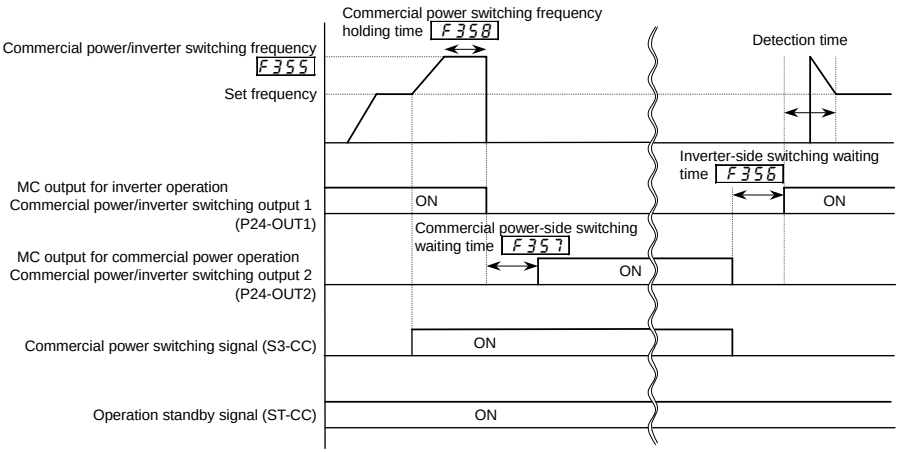

Commercial power switching signal S3-CC ON : Commercial power operation
Commercial power switching signal S3-CC OFF : Inverter operation
Note: If ST-CC is opened, switching cannot be operated normally.

Title	Function	Adjustment range	Example of setting
F354	Commercial power/inverter switching output selection	0~3	2 or 3
F355	Commercial power/inverter switching frequency	0~UL Hz	Power supply frequency etc.
F356	Inverter-side switching waiting time	0.10~10.00 sec.	According to model ⇒ Refer to page K-46.
F357	Commercial power-side switching waiting time	0.40~10.00 sec.	0.62
F358	Commercial power switching frequency holding time	0.10~10.00 sec.	2.00
F117	Input terminal function selection 7 (S3)	0~135	102 (Commercial power switching)
F130	Output terminal function selection 1 (OUT1)	0~255	46 (Commercial power/inverter switching output 1)
F131	Output terminal function selection 2 (OUT2)	0~255	48 (Commercial power/inverter switching output 2)

- Warning -
- When switching to commercial power, make sure that the direction in which the motor rotates when operated on commercial power agrees with the forward direction when operated via the inverter.
- Do not select any option (F311=2) of F311 (reverse rotation prohibition selection) that prohibits forward rotation. Or it becomes impossible to switch to commercial power, because the motor cannot rotate in the forward direction.

6.20 PID control

F359	: PID control switching	F368	: Process lower limit
F360	: PID control feedback control signal selection	F369	: PID control waiting time
F361	: Delay filter	F370	: PID output upper limit
F362	: Proportional (P) gain	F371	: PID output lower limit
F363	: Integral (I) gain	F372	: Process increasing rate (speed type PID control)
F364	: PID deviation upper limit		
F365	: PID deviation lower limit	F373	: Process decreasing rate (speed type PID control)
F366	: Differential (D) gain		
F367	: Process upper limit	F379	: PID output dead band

•Function

Using feedback signals (4 to 20mA, 0 to 10V) from a detector, process control can be exercised, for example, to keep the airflow, amount of flow or pressure constant.

6

⇒ For details, see instruction Manual(E6581329)specified in Section.

[Parameter setting]

Title	Function	Adjustment range	Default setting
F359	PID control switching	0:No PID control 1:Process type PID control (temp./pressure, etc.) operation 2:Speed type PID control (potentiometer, etc.) operation	0
F360	PID control feedback control signal selection	0:Deviation input (no feedback input) 1:VI/II (voltage/current input) 2:RR/S4 (potentiometer/voltage input) 3:RX (voltage input) 4:Optional AI1 (differential current input) 5:Optional AI2 (voltage/current input) 6: PG feedback option	0
F361	Delay filter	0.0~25.0	0.1
F362	Proportional (P) gain	0.01~ 100.0	0.10
F363	Integral (I) gain	0.01~ 100.0	0.10
F364	PID deviation upper limit	LL~UL Hz	*1
F365	PID deviation lower limit	LL~UL Hz	*1
F366	Differential (D) gain	0.00~2.55	0.00
F367	Process upper limit	LL~UL Hz	*1
F368	Process lower limit	LL~UL Hz	LL
F369	PID control waiting time	0~2400 sec.	0
F370	PID output upper limit	LL~UL Hz	*1
F371	PID output lower limit	LL~UL Hz	LL
F372	Process increasing rate (speed type PID control)	0.1~600.0	10.0
F373	Process decreasing rate (speed type PID control)	0.1~600.0	10.0
F379	PID output dead band	0~ 100	0

*1 : Inverter with a model number ending with -WN,HN: 60.0 -WP: 50.0

1) External connection

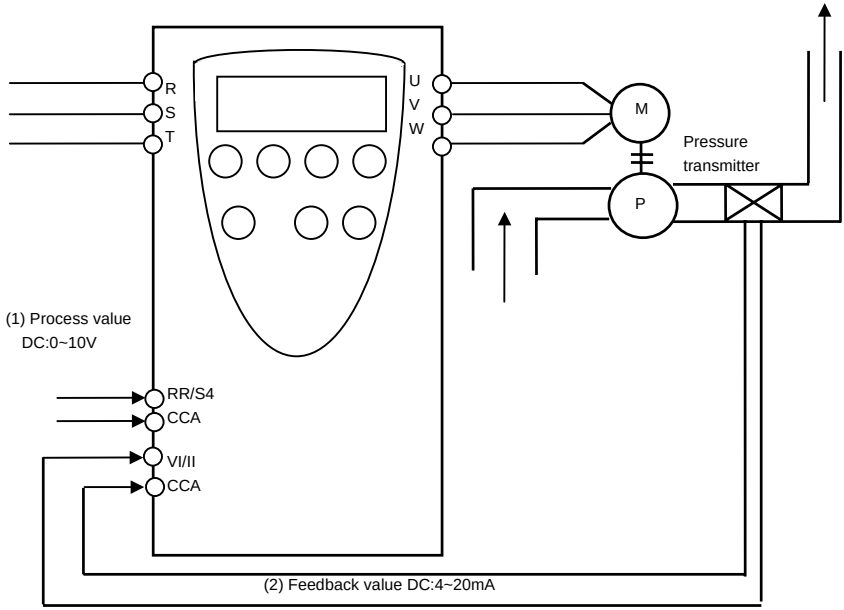

2) Types of PID control interface

Process value (frequency) and feedback value can be combined as follows for the PID control of the VF-PS1.

(1)Process value(frequency setting)	(2) Feedback value
Frequency setting mode selection F004/F207	PID control feedback control signal selection F360
1:VI/II (voltage/current input) 2:RR/S4 (potentiometer/voltage input) 3:RX (voltage input) 4:Operation panel input enabled (including LED/LCD option input) 5:2-wire RS485 communication input 6:4-wire RS485 communication input 7:Communication option input 8:Optional AI1 (differential current input) 9:Optional AI2 (voltage/current input) 10:UP/DOWN frequency 11:Optional RP pulse input 12:Optional high-speed pulse input	0:Deviation input (no feedback input) 1:VI/II (voltage/current input) 2:RR/S4 (potentiometer/voltage input) 3:RX (voltage input) 4:Optional AI1 (differential current input) 5:Optional AI2 (voltage/current input) 6: PG feedback option

Note 1: About the setting of F004 and F207: Do not select the same terminal that is used feedback terminal.

Note 2: The voltage/current changeover of the analog input VI/II and the option AI1 can be set by the parameter F108 or F109.

F108, F109 0:Voltage input (DC:0~10V)
1:current input (DC:4~20mA)

3) Setting the PID control

In case of controlling the airflow, water flow and pressure, please set the parameter F359 to" 1"(Process type PID control operation)

(1)Please set the parameter ACC (Acceleration time),dEC (deceleration time) to the suitable time for the system.
(2)Please set the following parameters to place limits to the setting value and the control value.

Placing a limit to the process value : The parameter F367(Process upper limit), F368 (Process lower limit)
Placing a limit to the PID deviation : The parameter F364(PID deviation upper limit), F365 (PID deviation lower limit)
Placing a limit to the PID output : The parameter F370(PID output upper limit), F371 (PID output lower limit)
Placing a limit to the output frequency : The parameter UL (Upper limit frequency), LL (Lower limit frequency)

4) Adjust PID control gain

Adjust PID control gains according to the process value, the feedback input signal and the item to be controlled.
Here are the parameters used to adjust PID control gains.

Title	Function	Adjustment range	Default setting
F362	Proportional (P) gain	0.01~100.0	0.10
F363	Integral (I) gain	0.01~100.0	0.10
F366	Differential (D) gain	0.00~2.55	0.00

F362 Proportional (P) gain

The proportional (P) gain set with f362 is the proportional (P) gain obtained by PID control.
A proportional (P) gain, a factor by which the deviation (difference between the process value and the feedback value) is multiplied, is used to perform control in such a way as to make a correction in proportion to the deviation.
Although setting this gain high is effective in increasing the response speed, setting it excessively high may cause an unstable operation, such as vibration.

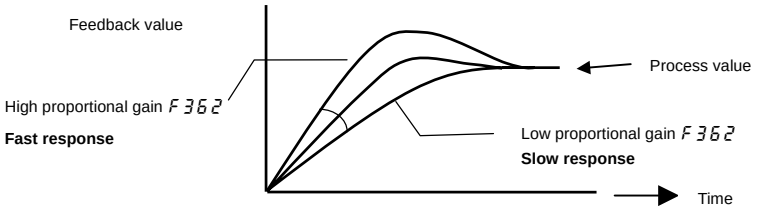

F363 Integral (I) gain

The integral (I) gain set with f363 is the integral (I) gain obtained by PID control.
The integral gain reduces the deviation remaining after proportional control to zero (offsetting of residual deviation).
Although setting this gain high is effective in reducing the residual deviation, setting it excessively high may cause an unstable operation, such as vibration.

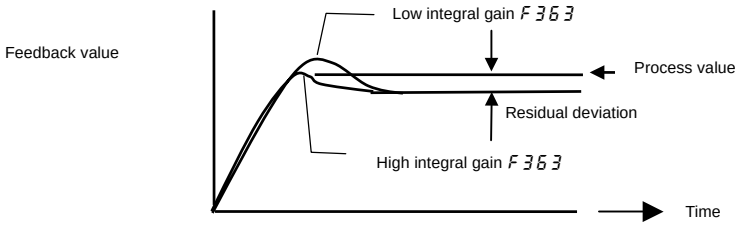

F366: Differential (D) gain

The differential (D) gain set with f366 is the differential (D) gain obtained by PID control.

The differential gain increases the speed of response to rapid changes in deviation. If this gain is set excessively high, a phenomenon in which the output frequency greatly fluctuates may occur.

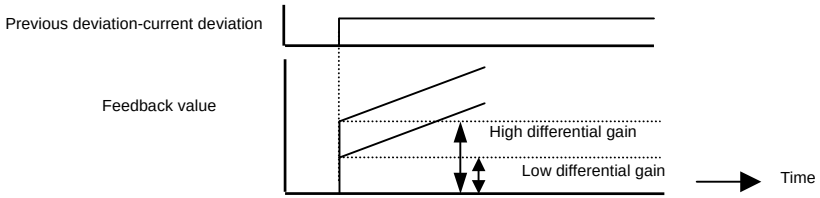

If one of input terminals is assigned input terminal function 52/53 (PID differentiation/integration reset), differential and integral values are always 0 (zero) during the input terminal on.

5) Adjusting the analog command voltage and current

For items which can be adjusted by reference and feedback input, such as voltage/current input (VI/II input),voltage input (RR/S4 input) and voltage input (RX input), adjust scaling factor of the voltage/current if necessary.

When feedback signals are very low, the gain can be increased by this adjustment.

When VI/II used as a voltage input terminal
(Default setting)

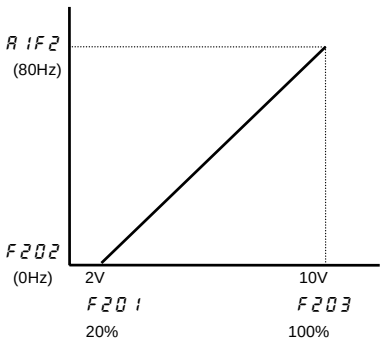

When VI/II used as a current input terminal
(F108 needs to be set to 1)

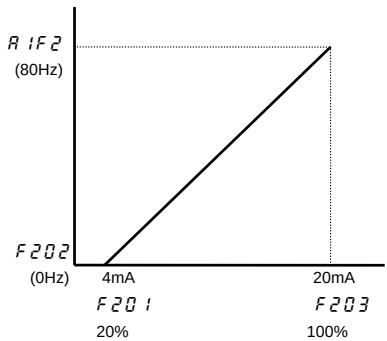

When RR/S4 used as a voltage input terminal
(Default setting)

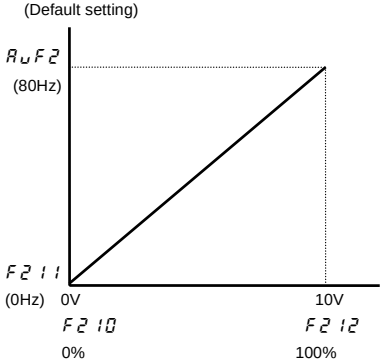

When RX used as a voltage input terminal
(Default setting)

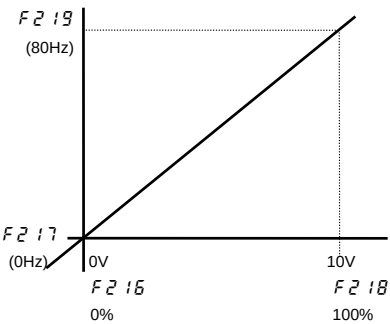

The characteristic of the feedback value can also be reversed by means of a signal from an external device.

Example: To use the S3 terminal as a PID normal/reverse characteristic switching signal input terminal

Title	Function	Adjustment range	Default setting
F117	Input terminal function selection7(S3)	0~135	54 (positive logic) 55 (negative logic)

6) Setting the time elapsed before PID control starts

You can specify a waiting time for PID control to prevent the inverter from starting PID control before the control system becomes stable, for example, after start-up.
The inverter ignores feedback input signals, carries out operation at the frequency determined by the value of processing for the time specified by F369 and enters the PID control mode after a lapse of the specified time.

6.21 Stop position control function

- Pt : V/f control mode selection
- F359 : PID control switching
- F360 : PID control feedback control signal selection
- F362 : Proportional (P) gain
- F375 : Number of PG input pulses
- F376 : Selection of number of PG input phases
- F381 : Simple positioning completion range

⇒ For details, see Instruction Manual (E6581319) specified in Section 6.42.

6

6.22 Setting motor constants

- F400 : Auto-tuning 1
- F401 : Slip frequency gain
- F402 : Auto-tuning 2
- F405 : Motor rated capacity (motor nameplate)
- F406 : Motor rated current (motor nameplate)
- F407 : Motor rated rotational speed (motor nameplate)
- F410 : Motor constant 1 (torque boost)
- F411 : Motor constant 2 (no-load current)
- F412 : Motor constant 3 (leak inductance)
- F413 : Motor constant 4 (rated slip)

When selecting automatic torque boost and vector control (i.e., when setting the parameter Pt to 2, 3, 4, 7 or 8. By default, Pt is set to 0 (v/f constant control)), be sure to set every parameter concerned in accordance with the flowchart on the next page.

⚠ Warning	
Prohibited	The inverter is tuned automatically (auto-tuning F400=2) when the inverter is started for the first time after setup. During auto-tuning, which takes about 3 minutes from several seconds as each model, the motor is energized, although it is standing still.
Mandatory	Provide cranes and hoists with sufficient circuit protection such as mechanical braking. Without sufficient circuit protection, the resulting insufficient motor torque during tuning could create a risk of machine stalling/falling. Be sure to set every parameter concerned in accordance with the flowchart on the next page. Failure to do this may cause the inverter not to control the motor properly, and therefore cause the motor not to deliver the desired performance.

Operation in automatic torque boost mode or vector control mode (Pt=2, 3, 4, 7, 8)

Is the motor Toshiba standard four-pole motor with the same capacity rating as the inverter? Is the motor cable 30m or less in length? *1

YES → End

NO ↓

Set the following parameters, as specified on the motor nameplate.

Nameplate information	Title	Setting range
Base frequency	uL	25.0~500.0Hz
Base frequency voltage	uLu	50~330 (200V) 50~660 (400V)
Rated capacity of motor	F405	0.10~500.0kW
Motor rated current	F406	0.1~2000A
Motor rated speed	F407	100~60000 min-1

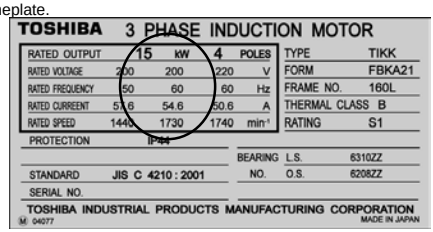

Set F400 at 4 *2
(After execution, the setting returns to 0.)

Etn3 is displayed.

NO → Set F400 at 4 *2

YES ↓

The base frequency or the rated rotational speed of the motor is not set correctly. Check their settings.

Enter the correct value for uL or F407, and then set F400 to 4 again.

The following parameters have been calculated and set.
F410 Motor constant 1
F411 Motor constant 2
F412 Motor constant 3
F413 Motor constant 4

*2: No problem even if the motor is not connected.
*3: It does not matter whether the motor is under load or no-load conditions.
*4: As for models 200V-55kW or more and 400V-90kW or more, also "F411" and "F413"is set.
⇒ For details of each parameter, see the next page.

*3 Is the motor actually connected and in a standby state?

NO → Make necessary settings, as specified in (1) Setting auto-tuning. → End

YES ↓

Check the precautions to be taken when setting the auto tuning parameter to 1, and if no problem is found, then set F400 to 2 and start operation.

Ent1 or Ent2 is displayed.

YES → Parameters F410 and F412 use the value calculated automatically by the → End

NO → *4

F410 and F412 have been tuned to the motor connected. → End

*1:

Motor used			Tuning required or not (Yes in flowchart: Tuning required, No: Tuning not required)
Type	No. of motor poles	Capacity	
Toshiba standard motor	4P	Same as the inverter capacity	* Not required (tuned to factory defaults)
		Different from the inverter capacity	Required
	Other than 4P	Same as the inverter capacity	
		Different from the inverter capacity	
Others			

* When using a long cable (guide: 30m or over), be sure to make auto-tuning 1 (F400=2).

6

(1) Setting auto-tuning

This auto tuning function allows you to set the motor constant easily, which needs to be set when operating in auto torque boost mode or vector control mode (Pt = 2, 3, 4, 7 or 8).

There are two parameters (F400 and F402 described below) for auto tuning. For the steps to be followed when setting these parameters, see the flowchart on the previous page. This section provides an explanation of F400 and F402.

[Parameter setting]

Title	Function	Adjustment range	Default setting
F400	Auto-tuning 1	0:No auto-tuning 1:Initialize motor constant (0 after execution) 2:Continue operation continued after auto-tuning (0 after execution) 3:Auto-tuning by input terminal signal(0 after execution) 4:Motor constant auto calculation (0 after execution)	0

F400=1: Resets F410 (motor constant 1), F411 (motor constant 2), F412 (motor constant 3) and F413 (motor constant 4) to their factory default settings (constant of a Toshiba standard four-pole motor with the same capacity as the inverter).

F400=2: Makes the inverter tune the motor constant, considering how the motor is connected, when it is started for the first time after this setting is made. Connect the motor to the inverter in advance when selecting this setting.

F400=3: Makes the inverter only tune the motor constant, unlike F400=2. Connect the motor to the inverter in advance when selecting this setting.
This function operates when "ST" signal and "Auto-tuning" signal became active.
(Use this setting if the machine cannot be started as-is after tuning for some reason on the part of the machine.)

F400=4: If you select this setting after entering the information indicated on the motor nameplate (uL (base frequency), uLu (base frequency voltage), F406 (rated current of motor), F407 (rated speed of rotation of motor)), the inverter will calculate the motor constant and set the parameters F410 through F413 automatically.
There is no need to connect the motor when making this setting.

[Parameter setting]

Title	Function	Adjustment range	Default setting
F402	Auto-tuning 2	0:Disabled 1:Self-cooled motor 2:Forced-air-cooled motor	0

Auto-tuning 2 refers to the function of adjusting the motor constant automatically, while estimating the increase in the motor temperature.

If your inverter is equipped with a self-cooling fan (fan connected directly to the motor shaft), set F402 to 1.

When using a motor with a cooling fan (forced air-cooling type), set F402 to 2.

• Perform auto-tuning 2 along with auto-tuning 1.

• Perform auto-tuning when the motor is cold (temperature equal to the ambient temperature).

Precautions on auto-tuning 1

(1) The inverter is tuned automatically (auto-tuning 1 F400=2) when the inverter is started for the first time after setup. During auto-tuning 1, which takes about 3 minutes from several seconds, the motor is energized, although it is standing still. Noise may be produced by the motor during auto-tuning 1, which, however, does not indicate that something is wrong with the inverter or the motor.

(2) Conduct auto-tuning 1 (F400=2) only after the motor has been connected and operation completely stopped.
If auto-tuning is conducted immediately after operation stops, the presence of a residual voltage may result in abnormal tuning.

(3) Usually, auto-tuning terminates into 3 minutes from several seconds as each model. If an error occurs, however, the inverter trips (display Etn) and no motor constant is set. For these motors, perform manual tuning using (2) described below.

(4) It may not be possible to tune automatically special motors such as high-speed motor or high-slip motor. For these motors, perform manual tuning using (2) described below.

(5) Provide cranes and hoists with sufficient circuit protection such as mechanical braking. Without sufficient circuit protection, the result of insufficient motor torque during tuning could create the risk of the machine stalling/failing.

(6) If auto-tuning is impossible or an auto-tuning error (Etn) is displayed, perform manual tuning with (2) described below.

Precautions on vector control ⇒ Refer to Section 5.6,9).

■ Examples of setting the motor constants

a) Combination with a Toshiba standard motor (4P motor with the same capacity as the inverter)

Inverter : VFAS1-2037PL
Motor : 3.7kW-4P-60Hz

1) Set the V/f control mode selection Pt at 3 (Sensorless vector control).
2) Set the auto-tuning 1 (F400) at 2. (When the cable length is 30m or over.)

b) Combination with a standard motor other than the above Toshiba motor

Inverter : VFAS1-2037PL
Motor : 2.2kW-2P-50Hz

1) Set the V/f control mode selection Pt at 3 (Sensorless vector control).
2) Set uL, uLu, F405, F406 and F407, as specified on the motor nameplate.
3) Set the auto-tuning 1(F400) at 4.
4) Set the auto-tuning 1 (F400) at 2.

(2) Setting sensorless vector control and manual independently Setting motor constants

Perform all operations in the flowchart on the previous page. If the motor specifications are unknown, enter only the motor capacity (F405) and set parameter F400 to 4. After that, run the motor and set other parameters with the following explanation about parameter adjustments as a guide.
Setting motor parameters are necessary when Pt is set at 2, 3, 4, 7 or 8.

(1) Slip frequency gain F401
This parameter is to adjust the slippage of the motor.
Setting this parameter at a larger number can reduce the slippage of the motor. However, setting it at an excessively large number may result in hunting, etc., and thus cause an unstable operation.

(2) Motor constant 1 F410 (Torque boost) (Motor test reports may be useful.)
This parameter is to adjust the primary resistance of the motor. Setting this parameter at a larger value can prevent the drop of the motor torque in low speed ranges due to a voltage drop. However, setting it at an excessively large number may result in large current in low speed range and appearance of an overload trip, etc.

(3) Motor constant 2 F411 (No-load current) (Motor test reports may be useful.)
This parameter is to adjust the exciting inductance of the motor. The larger the set value, the more exciting current can be increased. Note that specifying a too large value for the motor constant may cause hunting.

(4) Motor constant 3 F412 (Leak inductance) (Motor test reports may be useful.)
This parameter is to adjust the leakage inductance of the motor. The larger the set value, the larger torque the motor can produce in high-speed ranges.

(5) Motor constant 4 F413 (Rated slip)
This parameter is to adjust the secondary resistance of the motor. The amount of compensation for slip increases with increase in this value.

(6) F460 (Speed loop proportional gain)
This parameter is to adjust the gain responsive to speed. Specifying a large gain increases the speed of response, but specifying an excessively large gain may result in the occurrence of hunting. If operation is unstable and hunting occurs, operation can be stabilized in most cases by reducing the gain.

(7) F462 (Moment of inertia of load)
This parameter is used to adjust the excess response speed. Specifying a large value reduces the amount of overshoot at the completion of acceleration. So, specify a value appropriate to the actual moment of inertia of the load.

6.23 Increasing the motor output torque further in low speed range

F415 : Exciting strengthening coefficient

F416 : Stall prevention factor

The output torque of the motor can adjusted using the parameters described in 6.22 in most cases, but if a finer adjustment is required, use these parameters.

[Parameter setting]

Title	Function	Adjustment range	Default setting
F415	Exciting strengthening coefficient	100~130 %	100
F416	Stall prevention factor	10~250	100

If the torque needs to be increased in low speed range (10Hz or less as a guide)

Perform auto-tuning according to the instructions in 6.22, and if the torque needs to be increased further in low speed range, first increase the slip frequency gain (F401) to a degree (80% or so as a guide) that hunting of the motor does not occur. Then, increase motor constant 1 (F410) by 1.1 times the current value as a guide. If the torque needs to be increased even further, increase the exciting current factor (F415) to a maximum of 130%. F415 is a parameter that increases the magnetic flux of the motor at low speeds, so specifying a higher value for F415 increases the no-load current. If the no-load current exceeds the rated current, do not adjust this parameter.

If the motor stalls when operated at frequencies above the base frequency

Adjust F416 (stall prevention factor).

If a heavy load is applied momentarily (transiently), the motor may stall before the load current reaches the stall prevention level (F601). In such a case, a motor stall may be avoided by reducing the value of F416 gradually.

6.24 Torque control

⇒ For details, refer to Instruction Manual (E6581331) specified in Section 6.42.

6.24.1 Torque command

Pt	: V/f control mode selection		
F420	: Torque command selection		
F201	: VI/II input point 1 setting	F205	: VI/II input point 1 rate
F203	: VI/II input point 2 setting	F206	: VI/II input point 2 rate
F210	: RR/S4 input point 1 setting	F214	: RR/S4 input point 1 rate
F212	: RR/S4 input point 2 setting	F215	: RR/S4 input point 2 rate
F216	: RX input point 1 setting	F220	: RX input point 1 rate
F218	: RX input point 2 setting	F221	: RX input point 2 rate
F228	: AI2 input point 1 setting	F421	: Torque reference filter
F230	: AI2 input point 2 setting	F455	: Torque reference polarity selection
F435	: Prohibition of rotation in any direction other than the specified one (F or R)		
F725	: Opelation panel torque command		

⇒ For details, refer to Instruction Manual (E6581331) specified in Section 6.42.

6.24.2 Speed limits in torque control mode

F425	: Forward speed limit input selection	F430	: Speed limit (torque=0) center value reference selection
F426	: Forward speed limit input level		
F427	: Reverse speed limit input selection	F431	: Speed limit (torque=0) center value
F428	: Reverse speed limit input level	F432	: Speed limit (torque=0) band

⇒ For details, refer to Instruction Manual (E6581331) specified in Section 6.42.

6.24.3 Selection of tension torque bias input and load sharing gain input

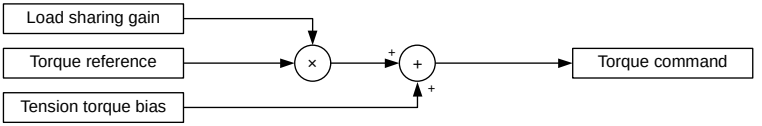

[Parameter setting]

Title	Function	Adjustment range	Default setting
F423	Tension torque bias input selection	0:Disabled 1:VI/II (voltage/current input) 2:RR/S4 (potentiometer/voltage input) 3:RX (voltage input) 4:Operation panel input enabled (including LED/LCD option input) 5:2-wire RS485 input enabled 6:4-wire RS485 input enabled 7:Communication option input enabled 8:Optional AI1 (Differential current input)	0
F727	Control panel tension torque bias	-250~250 %	0
F424	Load sharing gain selection	0:Disabled 1:VI/II (voltage/current input) 2:RR/S4 (potentiometer/voltage input) 3:RX (voltage input) 4:Operation panel input enabled (including LED/LCD option input) 5:2-wire RS485 input enabled 6:4-wire RS485 input enabled 7:Communication option input enabled 8:Optional AI1 (Differential current input)	0
F728	Control panel load sharing gain	0~250 %	100

[Selection of external signals]

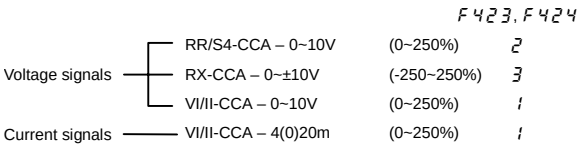

6.25 Torque limit

6.25.1 Torque limit switching

F440 : Power running torque limit 1 selection
F441 : Power running torque limit 1 level
F442 : Regenerative braking torque limit 1 selection
F443 : Regenerative braking torque limit 1 level
F444 : Power running torque limit 2 level
F445 : Regenerative braking torque limit 2 level
F446 : Power running torque limit 3 level
F447 : Regenerative braking torque limit 3 level
F448 : Power running torque limit 4 level
F449 : Regenerative braking torque limit 4 level
F454 : Constant output zone torque limit selection

- **Function**

This function is to decrease or increase the output frequency according to the loading condition when the motor torque reaches the limit level. Setting a torque limit parameter at 250% means “Invalid.”
With this function, you can also select from between limiting the constant output or limiting the constant torque in the constant output zone.
This function is not operate when the parameter Pt=0, 1,5 setting.

6

■ Setting methods

(1) When setting limits to torque, use internal parameters (Torque limits can also be set with an external control device.)

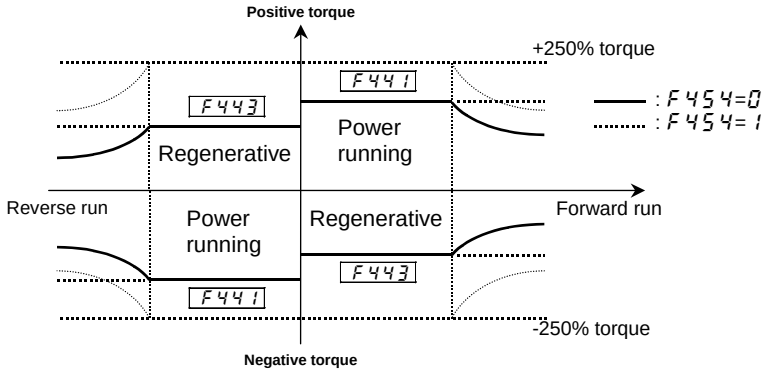

With the parameter F454, you can select the item that is limited in the constant output zone (somewhat weak magnetic field) from between constant output (F454=0: default setting) and constant torque (F454=1). When you select the constant torque limit option, you should preferably select the output voltage limit option (F307=3) with the parameter F307 (base frequency voltage selection).

Torque limits can be set with the parameters F441 and F443.

[Setting of power running torque]

F440 (Power running torque limit 1 selection) : Set at 4 (F441)
F441 (Power running torque limit 1) : Set a desirable torque limit level.

[Setting of regenerative torque]

F442 (Regenerative braking torque limit 1 selection) : Set at 4 (F443)
F443 (Regenerative braking torque limit 1) : Set a desirable torque limit level.

[Parameter setting]

Title	Function	Adjustment range	Default setting
F440	Power running torque limit 1 selection	1:VI/II (voltage/current input) 2:RR/S4 (potentiometer/voltage input) 3:RX (voltage input) 4:F441	4
F441	Power running torque limit 1 level	0.0~249.9 % 250.0 %:Disabled	250.0 %
F442	Regenerative braking torque limit 1 selection	1:VI/II (voltage/current input) 2:RR/S4 (potentiometer/voltage input) 3:RX (voltage input) 4:F443	4
F443	Regenerative braking torque limit 1 level	0.0~249.9 % 250.0 %:Disabled	250.0 %
F454	Constant output zone torque limit selection	0 : Constant output limit 1 : Constant torque limit	0

Using parameters, four different torque limits can be set for each operating status: power running and regenerative braking. Refer to Section 7.2.1 for the setting for switching from the terminal board.

Power running torque limit 1 – F441	Regenerative braking torque limit 1 – F443
Power running torque limit 2 – F444	Regenerative braking torque limit 2 – F445
Power running torque limit 3 – F446	Regenerative braking torque limit 3 – F447
Power running torque limit 4 – F448	Regenerative braking torque limit 4 – F449

Note: If the value set with F601 (stall prevention level) is smaller than the torque limit, then the value set with F601 acts as the torque limit.

6

(2) When setting limits to torque, using external signals

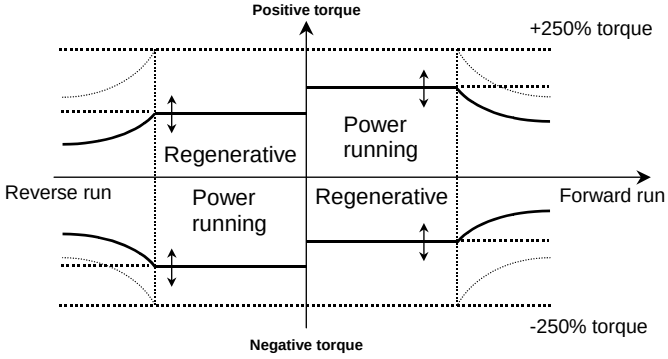

The torque limits can be changed arbitrarily by means of external signals.

[Selection of external signals]

F440, F442

Voltage signals	RR/S4 -CCA – 0~10V	2
	RX-CCA – 0~±10V	3
	VI/II-CCA – 0~10V	1
Current signals	VI/II-CCA – 4(0)~20mA	1

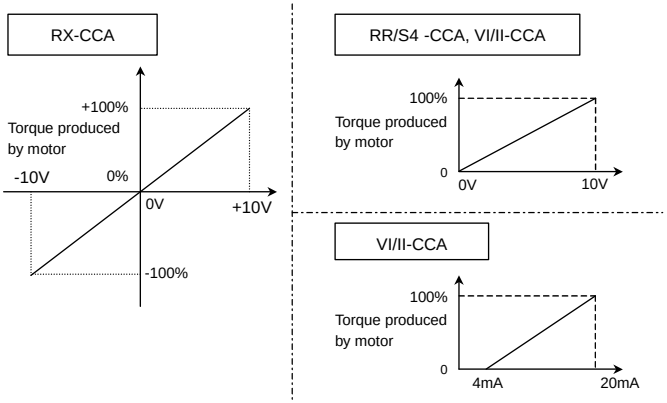

[Parameter setting]

Title	Function	Adjustment range	Default setting
F440	Power running torque limit 1 selection	1:VI/II (voltage/current input) 2:RR/S4 (potentiometer/voltage input) 3:RX (voltage input) 4:F441	4
F442	Regenerative braking torque limit 1 selection	1:VI/II (voltage/current input) 2:RR/S4 (potentiometer/voltage input) 3:RX (voltage input) 4:F443	4

In torque control mode, the values set with these parameters limit torque command values.

6.25.2 Torque limit mode selection at acceleration/deceleration

F451 : Acceleration/deceleration operation after torque limit

- **Function**

Using this function in combination with the mechanical brake of the lifting gear (such as a crane or hoist) makes it possible to minimize the delay before the brake starts working, and thus prevents the load from falling because of a decrease in torque.
Moreover, it improves the motor's response during inching operation and keeps the load from sliding down.

[Parameter setting]

Title	Function	Adjustment range	Default setting
F451	Acceleration/deceleration operation after torque limit	0: In sync with acceleration/deceleration 1: In sync with min. time	0

(1) F451=0 (In sync with acceleration/deceleration)

The increase in operation frequency is inhibited by the activation of the torque limit function. In this control mode, therefore, the actual speed is always kept in sync with the operation frequency. The operation frequency restarts to increase when torque decreases as a result of the release of the mechanical brake, so the time required for the specified speed to be reached is the sum of the delay in operation of the mechanical brake and the acceleration time.

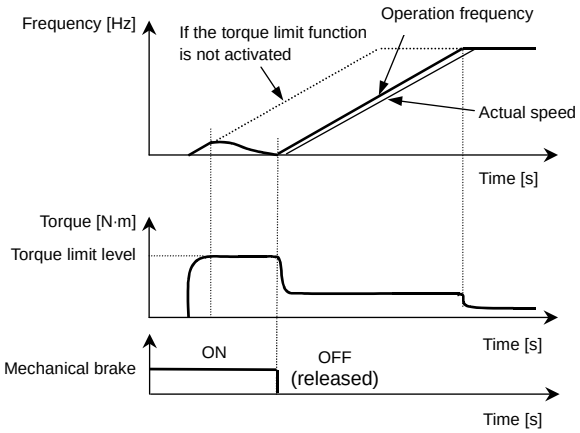

(2) F45 1= 1(In sync with min. time)

The operation frequency keeps increasing, even if the torque limit function is activated.

In this control mode, the actual speed is kept in sync with the operation frequency, while torque is held at a limit level when it decreases as a result of the release of the mechanical brake. The use of this function prevents the load from failing and improves the motor's response during inching operation.

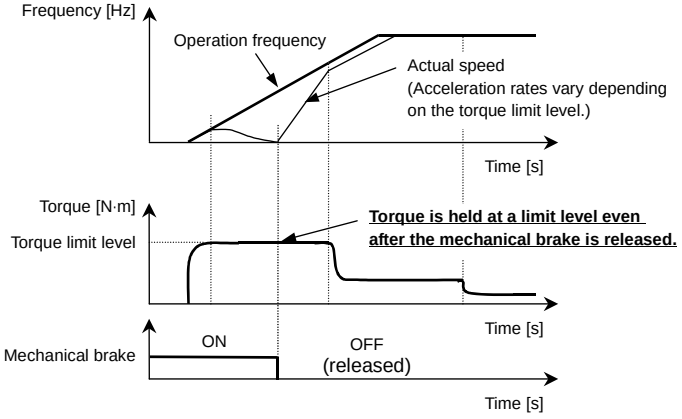

6.26 Stall prevention function

6.26.1 Power running stall continuous trip detection time

F452 : Power running stall continuous trip detection time

• **Function**
A function for preventing lifting gear from failing accidentally. If the stall prevention function is activated in succession, the inverter judges that the motor has stalled and trips.

[Parameter setting]

Title	Function	Adjustment range	Default setting
F452	Power running stall continuous trip detection time	0.0~ 1.0 sec.	0.0

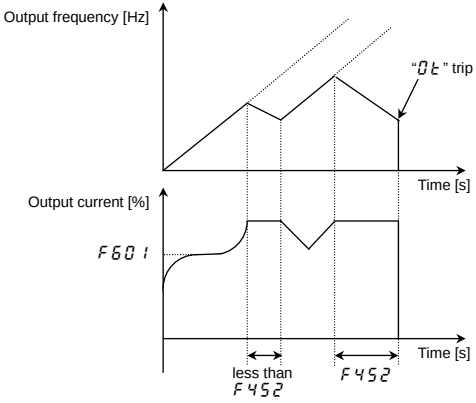

6.26.2 Regenerative braking stall prevention mode selection

F453 : Regenerative braking stall prevention mode selection

• **Function**
A function for preventing lifting gear from stopping in the wrong position. Only the function of preventing a stall by maintaining the current constant during regenerative braking (deceleration stop) is deactivated.

[Parameter setting]

Title	Function	Adjustment range	Default setting
F453	Regenerative braking stall prevention mode selection	0:Stall during regenerative braking 1:Not stall during regenerative braking	0

6.26.3 Stall prevention control switching

F468 : Stall prevention control switching

• **Function**
The operation of the stall prevention control can be switched. Set F468=1 when the overvoltage trip etc. are displayed when acceleration and the deceleration are switched.
This parameter is effective at only V/f control mode(Pt =0,1,5).

[Parameter setting]

Title	Function	Adjustment range	Default setting
F468	Stall prevention control switching	0: Stall prevention control 1: Stall prevention control 2	0

6.27 Current and speed control adjustment

6.27.1 Current and speed control gain

F458 ~ F466 : Current and speed control gain

⇒ For details, refer to Instruction Manual (E6581333) specified in Section 6.42.

6.27.2 Prevention of motor current oscillation at light load

F467 : Motor oscillation control

• **Function**
When a motor is in unstable with light load, this parameter can change the motor gain to make motor condition stable. First set F467 = 1 and check the motor condition. Please set 2 to 3 in case motor needs more stable condition. This parameter is effective only in V/F control mode (Pt =0, 1,5)

[Parameter setting]

Title	Function	Adjustment range	Default setting
F467	Motor oscillation control	0:Disabled 1:Enabled(Low gain) 2:Enabled(Middle gain) 3:Enabled(High gain)	0

6.27.3 Max output voltage modulation rate

6

F495 : Max output voltage modulation rate

• **Function**
In the case that Inverter output voltage drops and output current exceeds motor rating current at the frequency higher than base frequency, Change this parameter setting and check whether the output current is reduced.

[Parameter setting]

Title	Function	Adjustment range	Default setting
F495	Max output voltage modulation rate	0:Standard 1:100% 2:102.5% 3:105%	0

6.28 Fine adjustment of frequency setting signal

F470	: VI/II input bias	F475	: RX input gain
F471	: VI/II input gain	F476	: Optional AI1 input bias
F472	: RR/S4 input bias	F477	: Optional AI1 input gain
F473	: RR/S4 input gain	F478	: Optional AI2 input bias
F474	: RX input bias	F479	: Optional AI2 input gain

• **Function**

These parameters are used to fine adjust the relation between the frequency setting signal input through the analog input terminal and the output frequency.

Use these parameters to make fine adjustments after making rough adjustments using the parameters F201~F231.

The figure below shows the characteristic of the frequency setting signal input through the analog input terminal and that of the output frequency.

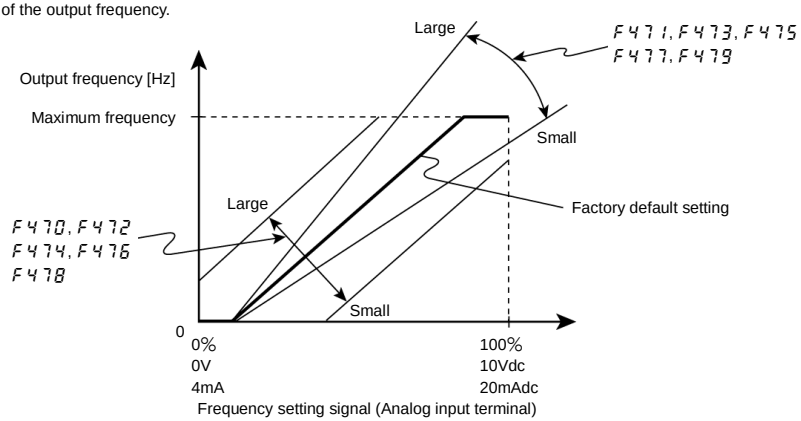

Bias adjustment of analog input terminals (F470, F472, F474, F476, F478)

To give leeway, the inverter is factory-adjusted by default so that it will not produce an output until a certain amount of voltage is applied to the analog input terminals.

To reduce leeway, decrease the bias of the analog terminal in use.

Note that specifying a too large value may cause an output frequency to be output, even though the operation frequency is 0 (zero) Hz.

Gain adjustment of analog input terminals (F471, F473, F475, F477, F479)

The inverter is factory-adjusted by default so that the operation frequency can reach the maximum frequency, even though the voltage and current to the analog input terminals are below the maximum levels.

To make an adjustment so that the frequency reaches its peak value at the maximum voltage and current, decrease the gain of the analog terminal in use.

Note that specifying a too small value may cause the operation frequency not to reach the maximum frequency, even though the maximum voltage and current are applied.

6.29 Operating a synchronous motor

F498, F499 : PM motor constant 1

F640, F641 : Step-out detection current level/ detection time

This parameter is used only when the inverter is used with a synchronous motor. If you intend to use your inverter with a synchronous motor, contact us at the your supplier.

6.30 Acceleration/deceleration 2

6.30.1 Setting acceleration/deceleration patterns and switching acceleration/deceleration patterns 1, 2, 3 and 4

F500 : Acceleration time 2
F501 : Deceleration time 2
F502 : Acceleration/deceleration 1 pattern
F503 : Acceleration/deceleration 2 pattern
F504 : Panel acceleration/deceleration selection
F505 : Acceleration/deceleration switching frequency 1
F506 : Acceleration S-pattern lower limit adjustment
F507 : Acceleration S-pattern upper limit adjustment
F508 : Deceleration S-pattern lower limit adjustment
F509 : Deceleration S-pattern upper limit adjustment
F510 : Acceleration time 3
F511 : Deceleration time 3
F512 : Acceleration/deceleration 3 pattern
F513 : Acceleration/deceleration switching frequency 2
F514 : Acceleration time 4
F515 : Deceleration time 4
F516 : Acceleration/deceleration 4 pattern
F517 : Acceleration/deceleration switching frequency 3

• **Function**
Four acceleration times and four deceleration times can be specified individually. The selection/switching mode can be selected from the following 3 options:
1) Selection by means of parameters
2) Switching by means of frequencies
3) Switching by means of terminals

[Parameter setting]

Title	Function	Adjustment range	Default setting
F500	Acceleration time 2	0.1[Note]~6000 sec.	According to model
F501	Deceleration time 2	0.1[Note]~6000 sec.	According to model
F504	Panel acceleration/deceleration selection	1:Acceleration/deceleration 1 2: Acceleration/deceleration 2 3: Acceleration/deceleration 3 4: Acceleration/deceleration 4	1
F510	Acceleration time 3	0.1[Note]~6000 sec.	According to model
F511	Deceleration time 3	0.1[Note]~6000 sec.	According to model
F514	Acceleration time 4	0.1[Note]~6000 sec.	According to model
F515	Deceleration time 4	0.1[Note]~6000 sec.	According to model

Note: The minimum setting of acceleration and deceleration times have been set respectively at 0.1 sec. by default, but they can be changed within a range of 0.01 sec. (setting range:0.01~600.0 sec.) by changing the setting of the parameter tYP (default setting).
⇒ For details, refer to Section 5.20.

1) Selection using parameters

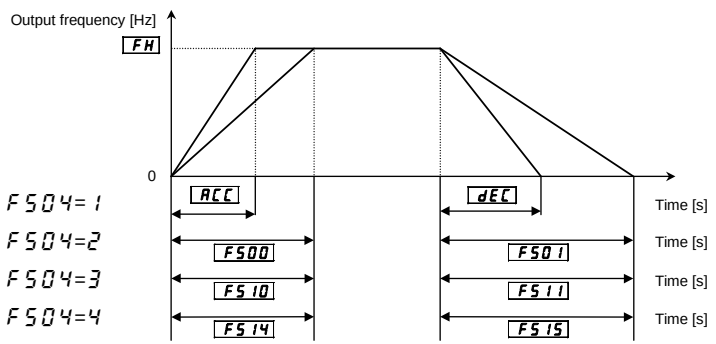

Acceleration/deceleration time 1 is initially set as the default. Acceleration/deceleration time 2, 3 and 4can be selected by changing the setting of the F504.
Enabled if CMOd=1 (operation panel input enabled).

2) Switching by frequencies - Automatically switching acc/dec times at certain frequencies

Title	Function	Adjustment range	Default setting
FS05	Acceleration/deceleration switching frequency 1	0.0~FH Hz	0.0
FS13	Acceleration/deceleration switching frequency 2	0.0~FH Hz	0.0
FS17	Acceleration/deceleration switching frequency 3	0.0~FH Hz	0.0

Note: Regardless of the sequence of input of frequencies, acc/dec times are switched from 1 to 2 at the lowest frequency, from 2 to 3 at the middle frequency and from 3 to 4 at the highest frequency. (For example, if the frequency set with FS05 is higher than that set with FS13, the acc/dec time 1 is selected in the frequency range below the FS13-set frequency, while the acc/dec time 2 is selected in the frequency range of the FS13-set frequency to the FS05-set frequency.)

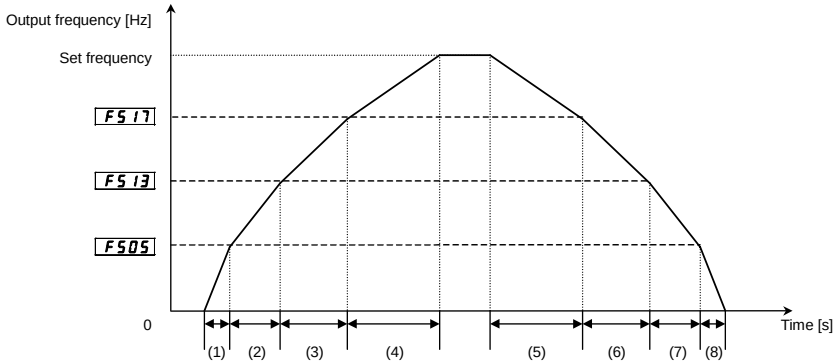

(1) Acceleration at the gradient corresponding to acceleration time ACC
(2) Acceleration at the gradient corresponding to acceleration time FS00
(3) Acceleration at the gradient corresponding to acceleration time FS10
(4) Acceleration at the gradient corresponding to acceleration time FS14
(5) Deceleration at the gradient corresponding to deceleration time FS15
(6) Deceleration at the gradient corresponding to deceleration time FS11
(7) Deceleration at the gradient corresponding to deceleration time FS01
(8) Deceleration at the gradient corresponding to deceleration time dEC

3) Switching using external terminals - Switching the acceleration/deceleration time via external terminals

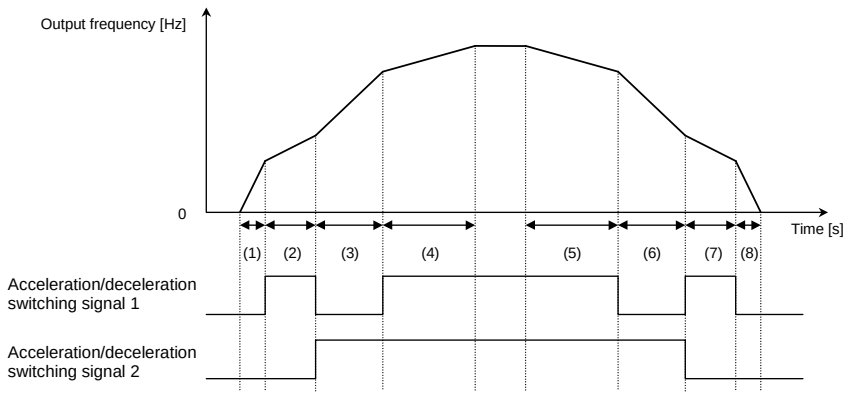

(1) Acceleration at the gradient corresponding to acceleration time ACC
(2) Acceleration at the gradient corresponding to acceleration time FS00
(3) Acceleration at the gradient corresponding to acceleration time FS10
(4) Acceleration at the gradient corresponding to acceleration time FS14
(5) Deceleration at the gradient corresponding to deceleration time FS15
(6) Deceleration at the gradient corresponding to deceleration time FS11
(7) Deceleration at the gradient corresponding to deceleration time FS01
(8) Deceleration at the gradient corresponding to deceleration time dEC

■ Setting parameters

a) Operating method: Terminal input
Set the command mode selection CMOd to 0.

b) Use the S2 and S3 terminals for switching. (Instead, other terminals may be used.)

S2: Acceleration/deceleration switching signal 1
S3: Acceleration/deceleration switching signal 2

Title	Function	Adjustment range	Example of setting
F116	Input terminal function selection 6 (S2)	0~135	24 (Acceleration/deceleration switching signal 1)
F117	Input terminal function selection 7 (S3)	0~135	26 (Acceleration/deceleration switching signal 2)

■ Acceleration/deceleration pattern

Acceleration/deceleration patterns can be selected individually, using the acceleration/deceleration 1, 2, 3 and 4 parameters.

1) Straight acceleration/deceleration
2) S-pattern acceleration/deceleration 1
3) S-pattern acceleration/deceleration 2

Title	Function	Adjustment range	Default setting
F502	Acceleration/deceleration 1 pattern	0:Straight, 1:S-pattern 1, 2:S-pattern 2	0
F503	Acceleration/deceleration 2 pattern	0:Straight, 1:S-pattern 1, 2:S-pattern 2	0
F506	Acceleration S-pattern lower limit adjustment	0~50 %	10
F507	Acceleration S-pattern upper limit adjustment	0~50 %	10
F508	Deceleration S-pattern lower limit adjustment	0~50 %	10
F509	Deceleration S-pattern upper limit adjustment	0~50 %	10
F512	Acceleration/deceleration 3 pattern	0:Straight, 1:S-pattern 1, 2:S-pattern 2	0
F516	Acceleration/deceleration 4 pattern	0:Straight, 1:S-pattern 1, 2:S-pattern 2	0

1) Straight acceleration/deceleration
A general acceleration/deceleration pattern.
This pattern can usually be used.

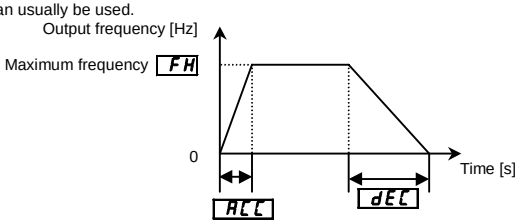

2) S-pattern acceleration/deceleration 1
Select this pattern to accelerate/decelerate the motor rapidly to a high-speed region with an output frequency of 60Hz or more or to minimize the shocks applied during acceleration/deceleration. This pattern is suitable for conveyer machines.

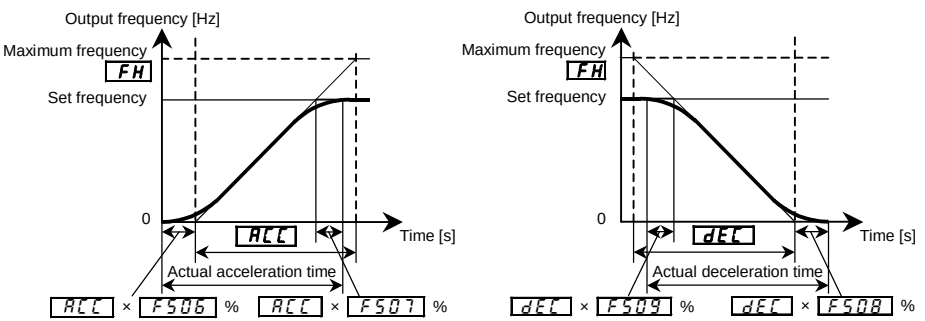

Both the S-pattern lower-limit setting (F506, F508) and the S-pattern upper limit setting (F507, F509) affect all acceleration/deceleration pattern settings.

3) S-pattern acceleration/deceleration 2

Select this pattern to obtain slow acceleration in a demagnetizing region with a small motor acceleration torque. This pattern is suitable for high-speed spindle operation.

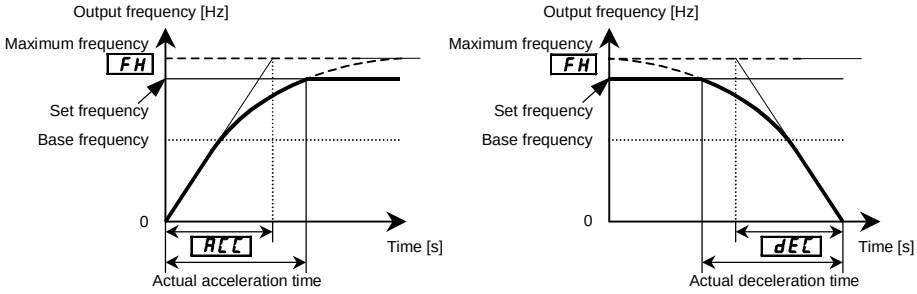

6.31 Pattern operation

F520 : Pattern operation selection
F521 : Pattern operation mode
F522, F531 : Number of repetitions of pattern group 1, 2
F523~F530 : Pattern group 1 selection 1~8
F532~F539 : Pattern group 2 selection 1~8
F540~F554 : Speed 1~15 operation time

6

- **Function**
  These parameters allow you to combine a maximum of 30 operation frequencies, operation time and acceleration/deceleration time (15 combinations of parameters x 2 patterns) for automatic pattern operation by means of the terminal board.

[Parameter setting]

Title	Function	Adjustment range	Default setting
F520	Pattern operation selection	0:Disabled, 1:Enabled (setting in seconds) 2:Enabled (setting in minutes)	0
F521	Pattern operation mode	0:Pattern operation reset when system stops operation 1:Pattern operation continued even after system stops operation	0
F522	Number of repetitions of pattern group 1	1~254, 255:Successive	1
F523~F530	Pattern group 1 selection 1~8	0:Skip, 1~15	0
F531	Number of repetitions of pattern group 2	1~254, 255:Successive	1
F532~F539	Pattern group 2 selection 1~8	0:Skip, 1~15	0
F540~F554	Speed 1~15 operation time	0.1~6000 (The unit depends on the setting of F520.) 6000:Infinite (depends on the stop trigger entered)	5.0

* Forward/reverse, acc/dec time 1, 2, V/f 1, 2 can be set with F560~F575 (Preset speed operation frequency 1~15 operation modes). ⇒ For details, refer to Section 5.12.

Note: When the function of auto-restart is active, the time spent for speed search is added to the operation time set for pattern operation. Consequently, the effective operation time sometimes becomes shorter than the settled operation time.

<Basic operating>

Step	Setting	Parameter
1	Set the pattern operation selection parameter at “Enabled.”	F520=0 (Disabled) 1 (Pattern operation enabled, setting in seconds) 2 (Pattern operation enabled, setting in minutes)
2	Set all necessary operation frequencies. In addition, set frequencies for preset speed operation.	Sr 1~Sr 7 (Preset speed operation frequencies 1~7) F287~F294 (Preset speed operation frequencies 8~15) F560 (Preset speed operation mode selection) F561~F575 (Preset speed operation frequency 1~15 operation mode)
3	Set the required operation time at each of the set operation frequencies. Using F520, select the unit of time to be set (second or minute).	F540~F554 (Operating time at each speed)
4	Set the sequence of each speed. This sequence following three methods. (1) Select a run/stop operation from the pattern operation mode. (2) Select a pattern group, and then set the sequence of each speed. (3) According to the required parameter group, select pattern operation selection 1 or 2 from input terminal function selection F111 to F126. Selecting pattern operation continuation signals makes it possible to select a start/stop method.	→ F521=0 (Patterned operation canceled during stop) * Pattern operation is reset by stop/switching operation before operating restarts. = 1 (Patterned operation continued during stop) * Pattern operation is started by stop/switching operation. The system stops temporarily on completion of every routine, then proceeds to the next routine. → F522 (Number of repetitions of pattern group 1) F523~F530 (Pattern group 1 selection 1~8) F531 (Number of repetitions of pattern group 2) F532~F539 (Pattern group 2 selection 1~8) → F111~F126=38, 39 (Pattern operation selection 1) =40, 41 (Pattern operation selection 2) =42, 43 (Pattern operation continuation signal) =44, 45 (Pattern operation trigger signal)
5	Monitor displayed during pattern operation Specify the pattern operation monitor item (66 to 69) that you want to display as a status monitor item (F711 to F718). This setting makes the inverter display the pattern operating status.	

Condition	Marking	Specification
Pattern and pattern group	P 1.0 (A) (B)	(A): Number of the pattern group (B): Number of the pattern
Pattern group – remaining number of repetitions	n 123	Indicates that pattern operation has been performed 123 times.
Operation preset speed	F 1	Frequency reference with preset speed 1 data.
Remaining time of the current pattern operation	1234 - - - -	Current pattern is finished in 1234 sec. Operation time is set for infinity or the system is waiting for the next step command.

■ Pattern operation switching output (output terminal function: 36, 37)

If the pattern operation switching output function is selected (activated), a signal is put out on completion of all the predetermined patterns of operation. When there is no operation command left to be entered or the pattern operation selection signal changes, the output terminals are turned off.

Terminal symbol	Title	Function	Adjustment range	Example of setting
OUT1	F130	Output terminal function selection 1	0~255	36 (Pattern operation finished – ON signal) or 37 (Pattern operation finished – OFF signal)

Note: To put out signals to the terminal OUT2, select the parameter F131.

Note:
- Pattern operation groups should be selected by terminal input.
- If no signal is put out from any pattern operation signal (all terminals are turned off), or after the pattern operation is completed, the system returns to the normal operation mode.
- When two or more pattern group numbers are entered simultaneously, the pattern group operations are performed in ascending order and automatically switched to one another. In this case, it may take about 0.06 seconds to search for each pattern.
- Do not turn on the operation signal in 10 ms after turning on pattern operation selections 1 and 2 when the machine is at rest. Or the normal operation frequency may be output.

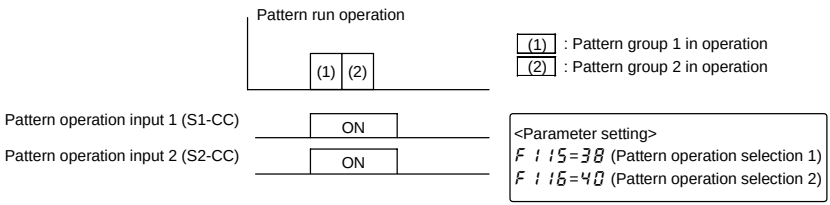

6.32 Preset speed mode

F560~F575 : Preset speed operation modes

⇒ For more details, refer to Section 5.12.

6.33 Protection functions

6.33.1 Setting of stall prevention level

F601 : Stall prevention level

⚠Warning	
Prohibited	• Do not set the stall prevention level (F601) extremely low. If the stall prevention level parameter (F601) is set at or below the no-load current of the motor, the stall preventive function will be always active and increase the frequency when it judges that regenerative braking is taking place. Do not set the stall prevention level parameter (F601) below 30% under normal use conditions.

• **Function**
This parameter reduces the output frequency by activating a current stall prevention function against a current exceeding the F601-specified level.

[Parameter setting]

Title	Function	Adjustment range	Default setting
F601	Stall prevention level	0~164 %, 165:Deactivated	150

[Display during the alarm 0C]
During an 0C alarm status, (that is, when there is a current flow in excess of the stall prevention level), the output frequency changes. At the same time, to the left of this value, "C" is displayed flashing on and off.

Example of display C 50

6.33.2 Inverter trip record retention

F602 : Inverter trip record retention selection

• **Function**
If the inverter trips, this parameter will retain the corresponding trip information. Trip information that has thus been stored into memory can be displayed, even after power has been reset.

[Parameter setting]

Title	Function	Adjustment range	Default setting
F602	Inverter trip record retention selection	0:Clear when power is turned off. 1:Retain even after power is turned off.	0

Up to four sets of latest trip records displayed in status monitor mode can be stored into memory.
Data (current, voltage, etc.) displayed in status monitor mode when the inverter is tripped is cleared when power is turned off.

■ Flow of operation when F602=1

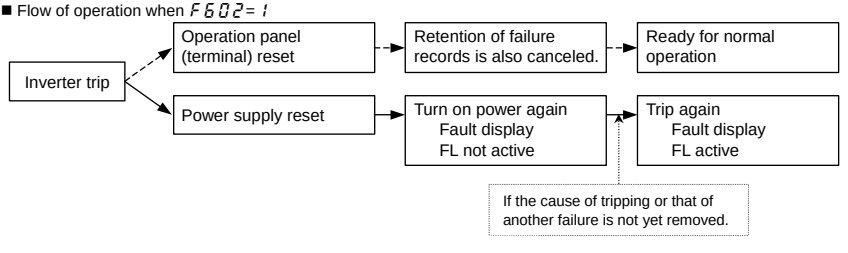

Be sure to select this setting if the main power supply is turned on and off endlessly for reasons of sequence, as shown below, in the event the control power supply backup device fails or not connected.

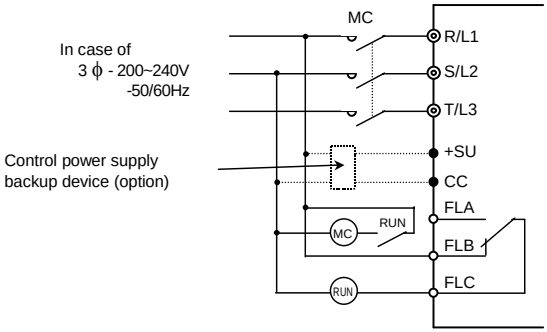

<Example of a situation in which the main power supply is turned on and off endlessly>
In the example of connection shown above, if the control power supply 4backup device (optional) fails or not connected and becomes incapable of supplying control power, control power is supplied from the inverter's main circuit and operation is continued without interruption. If the inverter is tripped under these circumstances because of a ground fault or overcurrent :

(1) The FL relay is triggered and the main power supply is shut off by the MC.
↓
(2) As a result of shutoff by the MC, the voltage in the inverter's main circuit and control circuit drop.
↓
(3) As a result of a drop in control voltage, the FL relay recovers from a trip.
↓
(4) The release of the FL relay turns the MC back on.
↓
(5) Operation is restarted and if the problem causing the inverter to be tripped is not eliminated, the inverter is tripped again, the situation in (1) arises again, and thus the above cycle of operation is repeated endlessly.

6

6.33.3 Emergency stop

F603 : Emergency stop

F604 : Emergency DC braking control time

- **Function**
  Emergency stop mode can be selected. At emergency stop, a trip message ("E") is displayed. FL relay can be deactivated using the output function selection.

1) Emergency stop by terminal operation
Emergency stop can be performed with the a or b-contact. Assign the emergency stop function to a terminal as described below, and select a stop mode.

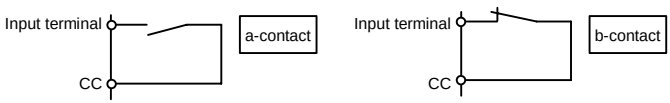

2) Emergency stop

F603= 1: The motor is brought to a stop within the time specified with dEC

F603=2: DC braking is performed at the current specified with F251 (DC braking current) for the time specified with F604 (emergency DC braking control time).

F603=3: The motor is brought to a stop within the time specified with F515 (deceleration time 4). Use this setting to bring the motor to a stop within time different from the normal deceleration time specified with dEC.

3) Selecting the operation of the FL relay

Using the output terminal selection parameter, you can specify whether or not to operate the FL relay.

F132 (output terminal selection 3) = 10 (default): Operates the FL relay in the event of an emergency stop.

F132 (output terminal selection 3) = 134: Does not operate the FL relay in the event of an emergency stop.

[Parameter setting]

Title	Function	Adjustment range	Default setting
F603	Emergency stop	0:Coast stop 1:Deceleration stop 2:Emergency DC braking 3:Deceleration stop (deceleration 4)	0
F604	Emergency DC braking control time	0.0~20.0 sec.	1.0
F251	DC braking current	0~ 100 %	50

(Example of terminal assignment): Assigning the emergency stop function to the S3 terminal.

Title	Function	Adjustment range	setting value
F117	Input terminal function selection 7(S3)	0~ 135	20 (Emergency stop)

Note 1: Emergency stopping via the specified terminal is possible, even during operation panel operation.

Note 2: If F603=2 (Emergency DC braking) and DC braking is not required for normal stopping, set the DC braking time F252 to 0.0 [s].

4) Emergency stopping from the operation panel is possible

Pressing the STOP key on the operation panel twice enables emergency stop.

(1) Press the STOP key ——— "EOFF" will blink.

(2) Press the STOP key again — If F603 (Emergency stop) = 0~3, the motor makes an emergency stop (or trips) according to the setting.

If "E" is displayed an error detection signal (FL) is issued (FL is activated).

6

6.33.4 Output phase failure detection

F605 : Output phase failure detection mode selection

• **Function**

This parameter detects inverter output phase failure. If the inverter detects an open phase failure, the tripping function and the FL relay will be activated. At the same time, the trip information EPH0 will also be displayed.

Detection errors may occur for special motors such as high-speed motors.

F605=0: No tripping

F605=1: With the power on, the phase failure detection is enabled only at the start of the first operation. The inverter will trip if the inverter detects an open phase failure.

F605=2: The inverter checks for output phase failures each time it starts operation. The inverter will trip if the inverter detects an open phase failure.

F605=3: The inverter checks for output phase failures during operation. The inverter will trip if the inverter detects an open phase failure.

F605=4: The inverter checks for output phase failures at the start of and during operation. The inverter will trip if the inverter detects an open phase failure.

F605=5: If the inverter detects an open phase failure in every phase, it does not trip but restarts operation when every phase is reconnected.
The inverter does not check for output phase failures when restarting after a momentary power failure.
This function (F605=5) doesn't operate at 200V-55kW/75kw and 400V-90kW or more models.

Note: A check for output phase failures is made during auto-tuning 1 (F400=2, 3), regardless of the setting of this parameter F605.

[Parameter setting]

Title	Function	Adjustment range	Default setting
F605	Output phase failure detection mode selection	0:Deselect 1:At starting (only one time after power is turned on) 2:At starting (each time power is turned on) 3:During operation 4:At starting + during operation 5:Output cut-off detection enabled	0

6.33.5 OL reduction starting frequency

F606 : OL reduction starting frequency

⇒ For more details, refer to Section 5.14.

6.33.6 Motor 150%-overload time limit

F607 : Motor 150%-overload time limit

⇒ For more details, refer to Section 5.14.

6.33.7 Input phase failure detections

F608 : Input phase failure detection mode selection

• **Function**
This parameter detects inverter input phase failure. At the occurrence of a phase failure, the EPH1 protection message is displayed.

F608=0: No tripping (Failure signal FL deactivated).
F608=1: This parameter detects inverter input phase failure. If the inverter detects an open phase failure, it trips.

[Parameter setting]

Title	Function	Adjustment range	Default setting
F608	Input phase failure detection mode selection	0:Disabled, 1:Enabled	1

Note 1: Setting F608 to 0 (input phase failure detection: disabled) may result in a breakage of the capacitor in the inverter main circuit if operation is continued under a heavy load in spite of the occurrence of an input phase failure.
Note 2: When using a single-phase direct current to operate the inverter, disable this function (F608=0)

6

6.33.8 Control mode for low current

F609 : Low current detection hysteresis width
F610 : Low current trip selection
F611 : Low current detection current
F612 : Low current detection time

• **Function**
If the current is lower than F611 level and passes for a time longer than F612, the inverter trips.
Trip information is displayed as "UC."

F610=0: No tripping (Failure signal FL deactivated).
A low current alarm can be put out by setting the output terminal function selection parameter.
F610=1: The inverter will trip (the failure signal FL will be activated) if a current below the current set with F611 flows for the period of time specified with F612.

Title	Function	Adjustment range	Default setting
F609	Low current detection hysteresis width	1~20 %	10
F610	Low current trip selection	0: No trip 1:Trip	0
F611	Low current detection current	0~ 100 %	0
F612	Low current detection time	0~255 sec.	0

<Example of operation>

Output terminal function: 26 (UC) Low current detection

F610=0 (No trip)

Ex.) When outputting low current detection signals through output terminal OUT1

Title	Function	Adjustment range	Example of setting
F130	Output terminal function selection 1(OUT1)	0~255	26

Note: To put out signals to the terminal OUT2, select the parameter F131.

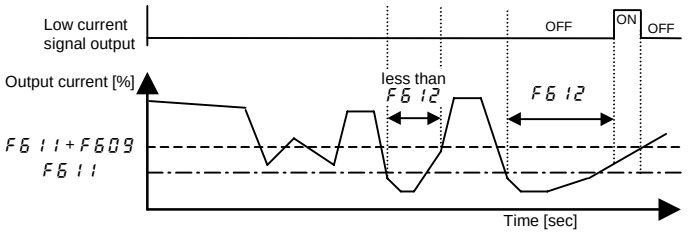

When F610=1 (tripping), the inverter will trip if low current lasts for the period of time set with F612. After tripping, the low current signal remains ON.

6.33.9 Detection of output short circuit

F613 : Selection of short circuit detection at starting

6

- **Function**
  Detects a short-circuit on the output side of the inverter.

Title	Function	Adjustment range	Default setting
F613	Selection of short circuit detection at starting	0:Each time (standard pulse) 1:Only one time after power is turned on 2:Each time (short pulse) 3:Only one time after power is turn on (short pulse) 4:Each time (Extremely shot-time pulse) 5:Only one time after power is turn on (Extremely shot-time pulse)	0

F613 ····· 0, 2, 4: Standard —— detecting at starting
1, 3, 5: A check is made once at the first start of operation after the power is turned on or the inverter is reset.

Note: If the input voltage is rather high (480V as a guide) or the inverter is used to operate a high-speed motor, set F613 to 2 or 3. Any other setting may cause the motor to malfunction, because a high-speed motor has a very low impedance. If the inverter malfunctions for reasons of impedance even though F613 is set to 2 or 3, then set F613 to 4 or 5.

6.33.10 Overtorque trip

F615 : Overtorque trip selection
F616 : Overtorque detection level during power running
F617 : Overtorque detection level during regenerative braking
F618 : Overtorque detection time
F619 : Overtorque detection hysteresis

• **Function**
Trips the inverter or issues an alarm if the total time for which torque is above the level set with F616/F617 reaches the time set with F618. Trip information is displayed as "OL."

F615=0 (No trip) ····· No tripping (FL is not active).
F615=1 (Tripping) ····· The inverter will trip (the failure signal FL will be activated) if a torque larger than F616 (during power running) or F617 (during regeneration) passes for a time longer than the time set with F618.

Title	Function	Adjustment range	Default setting
F615	Overtorque trip selection	0:No trip, 1:Trip	0
F616	Overtorque detection level during power running	0~250 %	150
F617	Overtorque detection level during regenerative braking	0~250 %	150
F618	Overtorque detection time	0.00~10.00 sec.	0.50
F619	Overtorque detection hysteresis	0~100 %	10

Note: Using the output terminal function selection parameter, the inverter can be set so that it outputs overtorque detection signals regardless of the setting of F615. ⇒ Refer to Section 7.2.2.

<Example of operation>
Output terminal function: 28 Overtorque detection
F615=0 (No trip)

Ex.) When outputting overtorque detection signals through output terminal OUT1

Title	Function	Adjustment range	Example of setting
F130	Output terminal function selection 1(OUT1)	0~255	28

Note: To put out signals to the terminal OUT2, select the parameter F131.

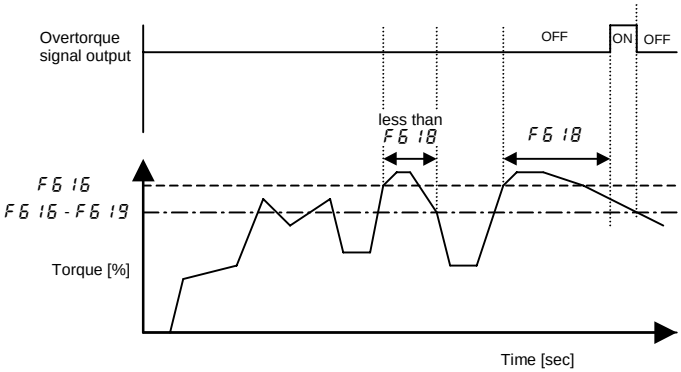

When F615=1 (tripping), the inverter will trip if overtorque lasts for the period of time set with F618. In such a case, the overtorque signal remains ON.

6.33.11 Cooling fan control selection

F620 : Cooling fan control selection

• **Function**
With this parameter, you can set the condition of cooling fan so that it operates only when the inverter requires cooling, and thus it can be used for a longer period.

F620=0: Automatic control of cooling fan, enabled. Operates only when the inverter is in operation.
F620=1: Automatic control of cooling fan, disabled. The cooling fan always operates when the inverter is energized.

The cooling fan automatically operates whenever the ambient temperature is high, even when the inverter is out of operation.

Title	Function	Adjustment range	Default setting
F620	Cooling fan control selection	0:Auto, 1:Always ON	0

6.33.12 Cumulative operation time alarm setting

F621 : Cumulative operation time alarm setting

• **Function**
This parameter is to make a setting so that the inverter puts out a signal when its cumulative operation time has reached the time set with F621.

* Indication of 0.1 represents 10 hours. Ex.: If 38.5 is displayed, the cumulative operation time is 3850 hours.

Title	Function	Adjustment range	Default setting
F621	Cumulative operation time alarm setting	0.1~999.9	610.0

■ Setting of output signal
Ex.) When assigning the cumulative operation alarm signal output function to the OUT2 terminal

Title	Function	Adjustment range	Example of setting
F131	Output terminal function selection 2 (OUT2)	0~255	56 (Negative logic 57)

6

6.33.13 Abnormal speed detection

F622 : Abnormal speed detection time
F623 : Overspeed detection frequency upper band
F624 : Overspeed detection frequency lower band

• **Function**
When use at speed control mode with sensor (Pt = 7, 8), it always monitors the rotational speed of the motor, even when the motor is at rest, and if the speed remains out of the specified limits for the specified length of time, it outputs an error signal.
When use at speed control mode without sensor (Pt =0~6), it always monitors the estimated rotational speed of the motor.

Title	Function	Adjustment range	Default setting
F622	Abnormal speed detection time	0.01~100.0 sec.	0.01
F623	Overspeed detection frequency upper band	0.0: Disabled, 0.1~30.0 Hz	0.0
F624	Overspeed detection frequency lower band	0.0: Disabled, 0.1~30.0 Hz	0.0

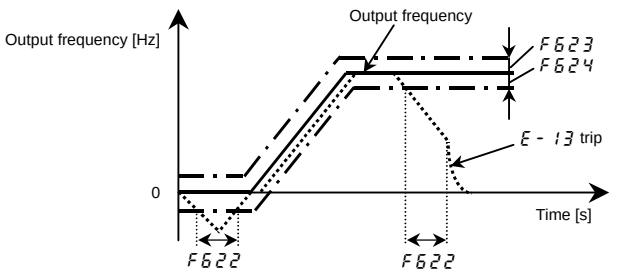

Note 1: This function doesn't operate at the time of a torque control.
Note 2: It is advisable to set the parameter F451 (Acceleration/deceleration operation after torque limit) to 1 when this function is set.

6.33.14 Overvoltage limit operation

F626 : Overvoltage limit operation level

⇒ For more details, refer to Section 6.14.2.

6.33.15 Undervoltage trip

F625 : Undervoltage detection level

F627 : Undervoltage trip selection

F628 : Undervoltage (trip alarm) detection time

• **Function**
This parameter is used for selecting the control mode when an undervoltage is detected. (Invalid, while the inverter stops.) When selecting "tripping enabled," you can also specify the time elapsed before the inverter trips.

F627=0: (Disabled) ····· Inverter stops,but does not trip. (FL is not active.)
F627= 1: (Enabled) ····· The inverter trips UP1 if an undervoltage passes for the time set with F628 or over. (FL is activated.)

Title	Function	Adjustment range	Default setting
F625	Undervoltage detection level	50~79 %, 80 %: (auto mode)	80
F627	Undervoltage trip selection	0: Disabled, 1: Enabled	0
F628	Undervoltage (trip alarm) detection time	0.01~10.00 sec.	0.03

Note: For F625, 100% corresponds to a voltage of 200V (for 200V class) or 400V (for 400V class)

6.33.16 Regenerative power ride-through control level

F629 : Regenerative power ride-through control level

• **Function**
This parameter is used to set the operation level of the regenerative power ride-through control and the deceleration stop. (Refer to Section 5.18.2.)

Title	Function	Adjustment range	Default setting
F629	Regenerative power ride-through control level	55~100 %	75

Note1: Set this parameter at a value of F625+5% or more. Or the braking time of regenerative power ride-though control could be extremely shorter. This setting is not necessary if F625 is set to 80 (auto mode).
Note2: When power on or reset operation, the power supply voltage is detected. If the setting value of parameter F629 is too low, the setting value is automatically adjusted to stabilize the performance.
Note3: For F629, 100% corresponds to a voltage of 200V (for 200V class) or 400V (for 400V class)

6.33.17 Braking answer waiting time

F630 : Braking answer waiting time

• **Function**
This parameter is used to set the waiting time for answer from system (Input terminal function setting: System supporting sequence (BA: Braking answer 130, 131)). After start of operation, if no answer is received in set time (F630), the inverter trips (E-11).

Title	Function	Adjustment range	Default setting
F630	Braking answer waiting time	0.0:Disabled 0.1~10.0 sec.	0.0

6.33.18 VI/II analog input wire breakage detection level

F633 : VI/II analog input wire breakage detection level

• **Function**
The inverter will trip if the VI/II value remains below the specified value for 0.3 seconds or moreThe message "E - 18" is displayed.

F633=0: Disabled ····· The detection function is disabled.
F633= 1~ 100 ····· The inverter will trip if the VI/II value remains below the specified value for 0.3 seconds or more.

Title	Function	Adjustment range	Default setting
F633	VI/II analog input wire breakage detection level	0:None 1~ 100 %	0

6.33.19 Guide to time of replacement

F634 : Annual average ambient temperature

• **Function**
You can set the inverter so that it will calculate the remaining useful life of the cooling fan, main circuit capacitor and on-board capacitor from the ON time of the inverter, the operating time of the motor, the output current (load factor) and the setting of F634 and that it will display and send out an alarm through output terminals when each component is approaching the end of its useful life.

6

Title	Function	Adjustment range	Default setting
F634	Annual average ambient temperature	1: -10~+10°C 2: +11~+20°C 3: +21~+30°C 4: +31~+40°C 5: +41~+50°C 6: +51~+60°C	3

Note 1: Using F634, enter the annual average temperature around the inverter. Be careful not to enter the annual highest temperature.
Note 2: Set F634 at the time of installation of the inverter, and do not change its setting after the start of use. Changing the setting may cause a part replacement alarm calculation error.

6.33.20 Rush current suppression relay activation time

F635 : Rush current suppression relay activation time

• **Function**
This parameter is used to control the rush current suppressing resistor shorting relay when a direct current is passed or multiple inverters are used with their DC sections connected to each other.

Title	Function	Adjustment range	Default setting
F635	Rush current suppression relay activation time	0.0~2.5 sec.	0.0

The rush current suppressing relay is activated on the expiration of the time limit set with parameter F635 after the voltage in the DC section of the inverter has reached the specified level.

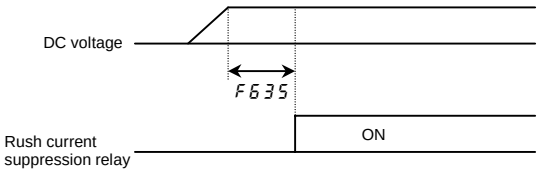

6.33.21 Motor thermal protection

F637 ~ F638 : PTC thermal selection

⇒ For details, refer to Instruction Manual (E6581339) specified in Section 6.42.

6.33.22 Braking resistance overload curve

F639 : Braking resistance overload time

⇒ Refer to 5.19 for details.

6.33.23 Selection of a restart condition for the motor stopped with a mechanical brake

F643 : Brake-equipped motor restart condition selection

• **Function**
With this function, the motor can be restarted immediately after a stop if it is operated at a frequency of more than 10Hz (20Hz or less) and stopped with a mechanical brake.
Use this function only when a mechanical brake is used to stop the motor. Using this function for a motor without a mechanical brake, the inverter may be tripped or fail.

6

Title	Function	Adjustment range	Default setting
F643	Brake-equipped motor restart condition selection	0: Default (no waiting time for frequencies of 10Hz and less) 1: Conditional (no waiting time for frequencies of 20Hz and less)	0

The timing chart in the figure below shows how the motor is operated and stopped with a mechanical brake.
By default, restart waiting time is set to prevent the inverter from being tripped because of the immediate restart of the motor which started coasting at a frequency of more than 10Hz and stopped (when the ST function is assigned to the S3 terminal, S3 signal is cut off).
This waiting time, however, is not necessary if a mechanical brake is used to stop the motor more reliably. When using a mechanical brake to stop the motor, set this parameter F643 to 1 to allow the motor to restart immediately after a stop if it started coasting at a frequency of 20Hz or less and stopped.
<Ex. : When parameter F643 is set to 1.>

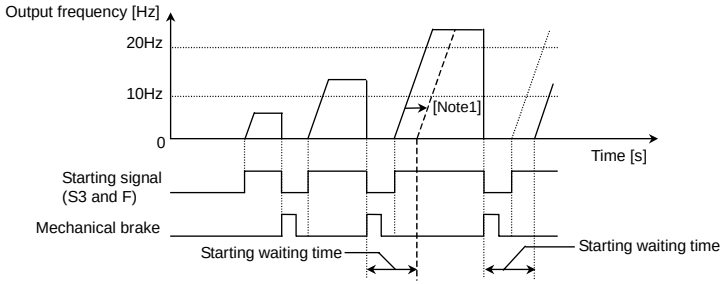

When assigning the ST function to the S3 terminal,
Set F110 to 0 (to cancel its factory default setting: 6 = ST always active), and
Set F117 to 6 (to assign the ST function to the S3 terminal).

Note 1: By default, the restart waiting time shown in the figure is set, and the restart of the motor is delayed by the time indicated by the dashed line.
Note 2: If the motor started coasting at a frequency of more than 20Hz, it will restart after the expiration of the waiting time.

6.33.24 Protection against a failure of the control power backup device (optional CPS002Z)

F647 : Control power supply backup option failure monitoring

• Function
If the control power backup device (optional CPS002Z) fails to supply power for some reason or other for fifteen minutes and over, the inverter will put out an alarm signal or a trip signal depending on the setting.
Leaving this parameter disabled may cause the main power supply to be turned on and off endlessly if something unusual occurs, depending on your sequence etc., so you should set this parameter F647 properly when using the optional power backup device.

Title	Function	Adjustment range	Default setting
F647	Control power supply backup option failure monitoring	0: Control power supply not backed up 1: Control power supply backed up (alarm in the event of a failure) 2: Control power supply backed up (tripping in the event of a failure)	0

■ F647=0: If control power is not backed up with an external backup device:
Select this setting if an external backup device is not connected to the inverter's control terminals +SU and CC.

Note: Even if F647 is set to 0 while control power is backed up, the inverter will cut off the power supply and issue COFF alarm in the event the backup device fails during operation.
If the backup device is already faulty when it is turned on, it will not be recognized to be faulty even if this setting is selected.

■ F647= 1: If control power is backed up with an external backup device (alarm signal output):
If F647 is set to 1, however, the inverter will cut off the power supply, let the motor coast, and raise a COFF alarm in the event something unusual (voltage drop) occurs with the power supplied through the +SU and CC terminals.
Once the COFF alarm has been raised, the inverter is not reset even if the control voltage returns to its normal level. To reset the inverter, turn off the main circuit power supply.

■ F647=2: If control power is backed up with an external backup device (trip signal output):
This setting trips the inverter in the event something unusual (voltage drop) occurs with the external control power backup device. Trip code E-29 is displayed.
In the event of this trip, unlike ordinary trips, the inverter is held tripped regardless of the setting of F602 (inverter trip retention selection).
This setting is effective only when the inverter is used in a standard connection shown in Chapter 2.
If reset the trip, operate with F647=0 or 1 setting.

Note: Be sure to set the parameter F602 to 1 if the main power supply is turned on and off endlessly for reasons of sequence, as shown below, in the event the control power backup device fails.
⇒ For details, refer to section 6.33.2.

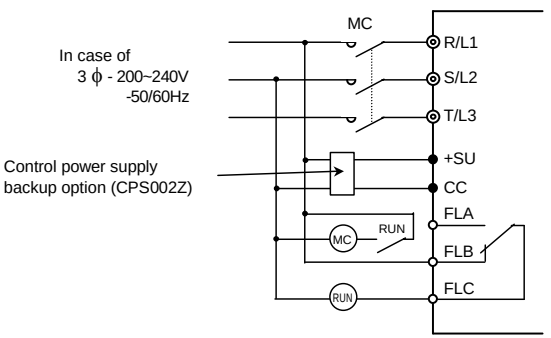

6.34 Override

F660 : Override addition input selection
F661 : Override multiplication input selection

• **Function**
These parameters are used to adjust reference frequencies by means of external input.

Title	Function	Adjustment range	Default setting
F660	Override addition input selection [Hz]	0:Disabled 1:VI/II (voltage/current input) 2:RR/S4 (potentiometer/voltage input) 3:RX (voltage input) 4:Operation panel input enabled (including LED/LCD option input) 5:2-wire RS485 input enabled 6:4-wire RS485 input enabled 7:Communication option input enabled 8:Optionl AI1 (differential current input) 9:Optionl AI2 (voltage/current input) 10:Up/Down frequency 11:Optionl RP pulse input 12:Optionl high-speed pulse input 13:Optionl binary/BCD input	0
F661	Override multiplication input selection [%]	0:Disabled 1:VI/II (voltage/current input) 2:RR/S4 (potentiometer/voltage input) 3:RX (voltage input) 4:F729 5:Optionl AI1	0

6

The override functions calculate output frequency by the following expression:

$$\text{Frequency command value} \times \left(1+\frac{\text{Value [\%] selected with F661}}{100}\right)+\text{Value [Hz] selected with F660}$$

1) Additive override
In th1is mode, an externally input override frequency is added to operation frequency command.
[Ex.1: RR/S4 (Reference frequency), VI/II (Override input)] [Ex.2:RX (Reference frequency), VI/II (Override input)]

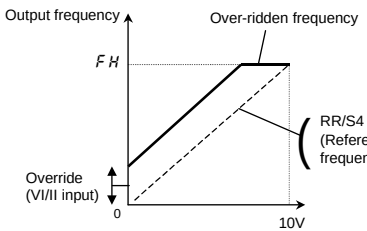

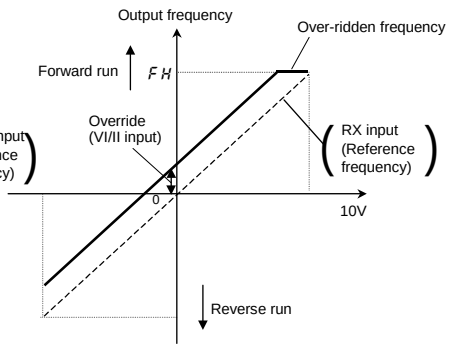

Ex.1:
F660= 1 (VI/II input), F661=0 (disabled)

Output frequency = Reference frequency + Override (VI/II input [Hz])

Ex.2:
F660= 1 (VI/II input), F661=0 (disabled)

Output frequency = Reference frequency + Override (VI/II input [Hz])

2) Multiplicative override
In this mode, each output frequency is multiplied by an externally override frequency.
[Ex.1: RR/S4 (Reference frequency), VI/II (Override input)] [Ex.2: RX (Reference frequency), VI/II (Override input)]

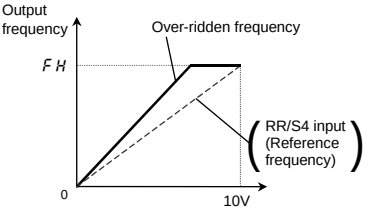

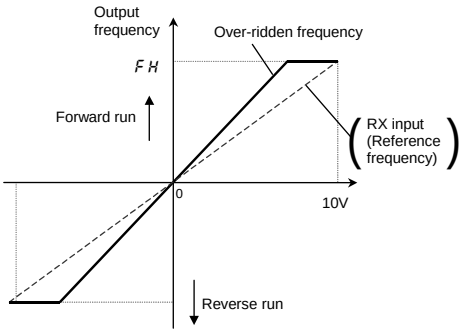

Ex.1:
F660=0 (Disabled), F661= 1 (VI/II input), FMOd=2(RR/S4 input), FH=80.0, UL=80.0
RR/S4 input, (F210=0, F211=0.0, F212= 100, AuF2=80.0)
VI/II input (F201=0, F205=0, F203= 100, F206= 100)
⇒ Setting of RR/S4 input: Refer to Section 7.3.1, Setting of VI/II input: Refer to Section 7.3.2.

Output frequency = Reference frequency × {1 + Override (VI/II input [%]/100)}

Ex.2:
F660=0 (Disabled), F661= 1 (VI/II input), FMOd=3 (RX input), FH=80.0, UL=80.0
RX input (F216=0, F217=0.0, F218= 100, F219=80.0)
VI/II input (F201=0, F202=0, F203= 100, F206= 100)
⇒ Setting of RX input: Refer to Section 7.3.3, Setting of VI/II input: Refer to Section 7.3.2.

Output frequency = Reference frequency × {1 + Override (VI/II input [%]/100)}

Ex.3:

Title	Function	Adjustment range	Default setting
F729	Operation panel override multiplication gain	- 100~ 100%	0

Output frequency = Reference frequency × {1 + Override (F729 setting value [%]/100}

6.35 Adjustment parameters

6.35.1 Pulse train output for meters

F669 : Logic output/pulse output selection (OUT1)

F676 : Pulse output function selection

F677 : Selection of number of pulses

- **Function**
  Pulse trains can be sent out through the OUT1-CC output terminals.
  To do so, it is necessary to select a pulse output mode and specify the number of pulses.
  This function output the pulse is based on F677 setting when each selection is suitable for the fixed output 1 level (refer to selection 5.16).

Set the SW4 to pulse output (PULS).

Ex.) When operations frequencies (0 to 60Hz) are put out by means of 0 to 10kHz

FH=60.0, F669= 1, F676=0, F677= 10.00

The pulse will change between 0 and 10kHz according to the operations frequencies between 0 and 60Hz.

⇒ See the circuit diagram shown at the bottom of page B-15.

Title	Function	Adjustment range	Default setting
F669	Logic output/pulse output selection (OUT1)	0:Logic output 1:Pulse output	0
F676	Pulse output function selection	0:Output frequency 1:Frequency command value 2:Output current 3:Input voltage (DC detection) 4:Output voltage 5:Compensated frequency 6:Speed feedback (realtime value) 7:Speed feedback (1-second filter) 8:Torque 9:Torque command 11:Torque current 12:Exiting current 13:PID feedback value 14:Motor overload factor (OL2 data) 15:Inverter overload factor (OL1 data) 16:Regenerative braking resistance overload factor (OLr data) 17:Regenerative braking resistor load factor (% ED) 18:Input power 19:Output power 23:Optional AI2 input 24:RR/S4 input 25:VI/II input 26:RX input 27:Optional AI1 input 28:FM output 29:AM output 30:Fixed output 1 31:Communication data output 32:Fixed output 2 33:Fixed output 3 34:Cumulative input power 35:Cumulative output power 46:My function monitor 1 47:My function monitor 2 48:My function monitor 3 49:My function monitor 4	0
F677	Selection of number of pulses	1.00~43.20 kHz	3.84

Note: The pulse length is fixed. Therefore, the duty is variable.

6

6.35.2 Setting of optional meter outputs

F672 ~ F675, F688 ~ F693 : Meter output settings

⇒ For details, refer to Instruction Manual (E6581341) specified in Section 6.42.

6.35.3 Calibration of analog outputs

F681 : FM voltage/current output switching

F682, F683 : FM output gradient characteristic and bias adjustment

F685, F686 : AM output gradient characteristic and bias adjustment

•Function

Output signals from FM/AM terminals are analog voltage signals. Their standard setting range is from 0 to 10Vdc.

The output current from terminal FM can be changed to 0 to 20mAdc (or 4 to 20mAdc) by changing the settings of terminal SW2 and a parameter.

[Parameter setting]

Title	Function	Adjustment range	Default setting
F681	FM voltage/current output switching	0: Voltage 0~10V output 1: Current 0~20mA output	0
F682	FM output gradient characteristic	0: Negative gradient (descending) 1: Positive gradient (ascending)	1
F683	FM bias adjustment	-10.0～100.0 %	0.0
F685	AM output gradient characteristic	0: Negative gradient (descending) 1: Positive gradient (ascending)	1
F686	AM bias adjustment	-10.0～100.0 %	0.0

Note: To switch to 0-20mAdc (4-20mAdc), set F681 to 1.

■ FM terminals setting example

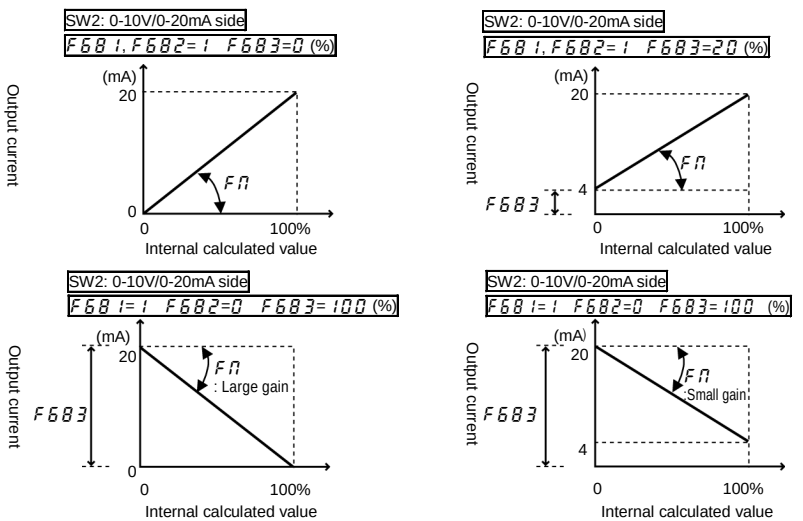

The analog output inclination can be adjusted using the parameter FN

For code data 50 to 64, negative inclination is invalid.

6.36 Operation panel parameter

6.36.1 Prohibition of key operations and parameter settings

F700 : Parameter write protect selection
F730 : Operation panel frequency setting prohibition selection
F734 : Operation panel emergency stop operation prohibition selection
F735 : Operation panel reset operation prohibition selection
F736 : Prohibition of change of CMOd/FMOd during operation
F737 : All key operation prohibition

- **Function**
  These parameters allow you to prohibit the operation of the RUN and STOP keys on the operation panel and the change of parameters. Using these parameters, you can also prohibit various key operations.

[Parameter setting]

Title	Function	Adjustment range	Default setting
F700	Parameter write protect selection	0:Permit, 1:Prohibit	0
F730	Operation panel frequency setting prohibition selection	0:Permit, 1:Prohibit	0
F734	Operation panel emergency stop operation prohibition selection	0:Permit, 1:Prohibit	0
F735	Operation panel reset operation prohibition selection	0:Permit, 1:Prohibit	0
F736	Prohibition of change of CMOd/FMOd during operation	0:Permit, 1:Prohibit	1
F737	All key operation prohibition	0:Permit, 1:Prohibit	0

Note: For the setting of F737 to take effect, the inverter needs to be turned off and turned back on after the setting.

■ **Resetting method**

1) Canceling the F700 prohibition setting
The setting of only parameter F700 can be changed at any time, even if it is set to 1.

2) Canceling the F737 prohibition setting
When this parameter is set to 1 (key operation prohibited), press and hold down the ENT key for 5 seconds or more. The message Undo appears and this setting is canceled temporarily to enable key operation.
To cancel this setting permanently, change the setting of F737 directly.

6.36.2 Displaying the rotational speed of the motor or the line speed

F702 : Frequency free unit display magnification
F703 : Frequency free unit conversion selection
F705 : Free unit display gradient characteristic
F706 : Free unit display bias

- **Function**
  The frequency or any other item displayed on the monitor can be converted freely into the rotational speed of the motor, the operating speed of the load, and so on. Using these parameters, the units of the amounts of processing and feedback in PID control can also be changed.

The value obtained by multiplying the displayed frequency by the F702 set value will be displayed as follows:

Value displayed = Monitor-displayed or parameter-set frequency × F702

1) Displaying the motor speed
To switch the display mode from 60Hz (default setting) to 1800 min^{-1} (the rotating speed of the 4P motor)

60.0 Hz → 1800
F702=0.00 → F702=30.00
60×30.00=1800

2) Displaying the speed of the loading unit
To switch the display mode from 60Hz (default setting) to 6 m/min^{-1} (the speed of the conveyer)

60.0 Hz → 6.0
F702=0.00 → F702=0.10
60×0.10=6.0

Note: This parameter displays the inverter output frequency as the value obtained by multiplying it by a positive number. Even when the actual speed of the motor changes according to the particular changes in load, the output frequency will always be displayed.

Title	Function	Adjustment range	Default setting
F702	Frequency free unit display magnification	0.00:OFF 0.01~200.0	0.00
F703	Frequency free unit conversion selection	0:All frequencies display free unit conversion 1:PID frequencies free unit conversion	0
F705	Free unit display gradient characteristic	0:Negative gradient (descending) 1:Positive gradient (ascending)	1
F706	Free unit display bias	0.00~FH Hz	0.00

* The F702 converts the following parameter settings:
In case of F703=0
- Free unit Frequency monitor display
  Frequency-Related parameters FH, UL, LL, AuF2, A1F2, Sr1~Sr7, F100, F101, F102, F202, F208, F211, F217, F219, F223, F225, F229, F231, F235, F237, F240, F241, F242, F243, F244, F250, F260, F265, F267, F268, F270~F275, F287~F294, F321, F322, F330, F331, F346, F350, F352, F355, F370, F371, F426, F428, F431, F432, F466, F505, F513, F517, F606, F623, F624, F812, F814, F923~F927

In case of F703=1
- Free unit PID control -Related parameters FC (panel frequency), F202, A1F2, F208, F211, AuF2, F217, F219, F223, F225, F229, F231, F235, F237, F364, F365, F367, F368, F370, F371

■ **An example of setting: When FH is 80, and F702 is 10.00**

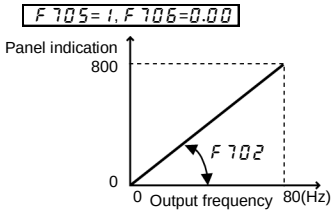

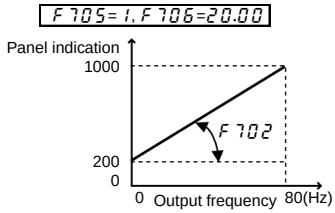

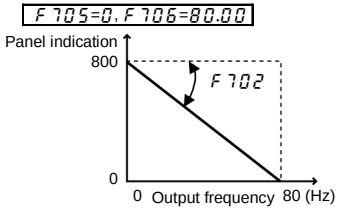

6.36.3 Changing the steps in which the value displayed changes

F707 : Changing step selection 1 (pressing a panel key once)

F708 : Change step selection 2 (panel display)

- **Function**
  These parameters are used to specify steps in which the command value or standard monitor output frequency displayed on the panel changes each time you press the up or down key to set a frequency on the operation panel.

Note: The settings of these parameters have no effect when the free unit selection (F702) is enabled.

■ When F707 is not 0.00, and F708 is 0 (disabled).

Under normal conditions, the panel frequency command value increases in steps of 0.1Hz each time you press the ⋀ key. If F707 is not 0.00, the frequency command value will increase by the value with F707 each time you press the ⋀ key. Similarly, it will decrease by the value set with F707 each time you press the ⋁ key.

In this case, the output frequency displayed in standard monitor mode changes in steps of 0.1Hz, as usual.

■ When F707 is not 0.00, and F708 is not 0.

The value displayed on the panel also can be changed in steps.

$$\boxed{\text{Output frequency displayed in standard monitor}} = \boxed{\text{Internally output frequency}} \times \frac{F708}{F707}$$

Title	Function	Adjustment range	Default setting
F707	Changing step selection 1 (pressing a panel key once)	0.00:Disabled 0.01~FH Hz	0.00
F708	Changing step selection 2 (panel display)	0:Disabled 1~255	0

■ Example of setting 1

Set F707= 10.00[Hz]:

Each time you press the ⋀ key, Each time the frequency setting FC changes in steps of 10.0Hz: 0.0 → 10.0 → 20.0 → ... → 60.0 [Hz]. This function comes in very handy when operating the load at limited frequencies that change in steps of 1 Hz, 5Hz, 10Hz, and so on.

■ Example of setting 2

Set F707= 1.00[Hz], F708= 1:

Each time you press the ⋀ key, the frequency setting FC changes in steps of 1 Hz: 0 → 1 → 2 → ... → 60 [Hz] and also the value displayed on the operation panel changes in steps of 1. Use these settings to hide decimal fractions. And also the value displayed on the operation panel changes in steps of 1. Use these settings to hide decimal fractions.

6.36.4 Changing the standard monitor display

F710 : Standard monitor display selection

F711~F718 : Status monitor 1~8 display selection

These parameters are used to select the item to be displayed when the power turned on and also to change items displayed in status monitor mode. ⇒ For details, refer to Section 8.3.

6.36.5 Canceling the operation command

F719 : Operation command clear selection when input terminal function ST (Refer to section 7.2.1) is OFF

• Function

You can use this function when driving with the RUN key on the operation panel.
When it turns on again after turning off the input terminal which assigned the standby "ST" function(Refer to 7.2.1) during driving the inverter, the inverter will drive again without pushing the RUN key.
Using this function, the inverter is not driven again unless the RUN key is pushed on after turning on the ST signal.

Title	Function	Adjustment range	Default setting
F719	Operation command clear selection when standby terminal (ST) is OFF	0:Clear operation command 1:Retain operation command	1

6.36.6 Selection of operation panel stop pattern

F721 : Operation panel stop pattern selection

• Function

This parameter are used to select a mode in which the motor started by pressing the RUN key on the operation panel is stopped when the STOP key is pressed.

1) Deceleration stop
The motor stops in the deceleration time set with the parameter dEC (or F501, F511).
2) Coast stop
The output of the inverter is cut off. The motor comes to a stop after coasting for a while by inertia. Depending on the load, the motor may keep running for a good long time.

[Parameter setting]

Title	Function	Adjustment range	Default setting
F721	Operation panel stop pattern selection	0:Deceleration stop 1:Coast stop	0

6.36.7 Setting of a torque command in panel operation mode

F725 : Operation panel torque command (reference value in %)

• Function

This parameter allows you to set a torque command value when torque is controlled with the operation panel.
Note: This parameter is operative only when F342, F420, F423 and F424 are set to 4. The value set with this parameter is used as the command value (%) for each function.

Operation panel operation: Torque command selection F420 is set at 4 (Panel input).

[Parameter setting]

Title	Function	Adjustment range	Default setting
F725	Operation panel torque command	-250~250 %	0

⇒ For details, refer to Instruction Manual (E6581331) specified in Section 6.42.

6.36.8 Torque-related parameters for panel operation

F727 : Operation panel tension torque bias

F728 : Operation panel load sharing gain

These parameters are used to specify the torque bias and how to share the load.

⇒ For details, refer to Instruction Manual (E6581331) specified in Section 6.42.

6.37 Tracing functions

F740 : Trace selection

F741 : Trace cycle

F742 : Trace data 1

F743 : Trace data 2

F744 : Trace data 3

F745 : Trace data 4

- **Function**

  These parameters are used to memorize and read out the data collected at the time of tripping or triggering. Up to 4 kinds of data can be selected from 64 kinds of data, and the data collected at 100 consecutive points can be stored in memory as trace data.

  Here is the time at which trace data is acquired.

  - Tripping: Data collected before the occurrence
  - Triggering: Data collected after triggering

  Note: To read data on a PC.

Title	Function	Adjustment range	Default setting
F740	Trace selection	0:Deselect 1:At tripping 2:At triggering	1
F741	Trace cycle	0:4ms 1:20ms 2:100ms 3:1s 4:10s	2
F742	Trace data 1	0~49	0
F743	Trace data 2	0~49	1
F744	Trace data 3	0~49	2
F745	Trace data 4	0~49	3

(Note1): For saving trace data, do not disconnect the control power supply or the main circuit power supply during 15 second after inverter tripped.

(Note2): When F741=0 or 1 setting, set the value of F678 (Constant at the time of filtering) lower than F741 setting time (trace cycle time).

1) To acquire trace data at the occurrence of tripping: F740=1
(Examples of current date output)

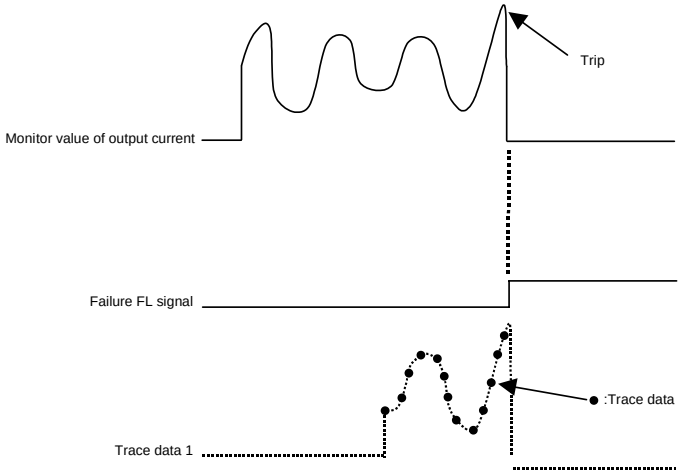

2) To acquire trace data at the time of triggering: F740=2

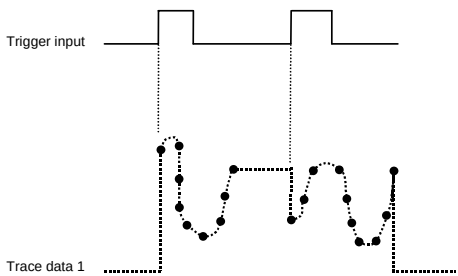

Ex.) When using the RR/S4 terminal as the tracing back trigger signal terminal

Title	Function	Adjustment range	Example of setting
F118	Input terminal function selection 8 (RR/S4)	0~135	76

Note 1: If the inverter trips when no trigger signal is given, trace data is overwritten with tripping data.
Note 2: Trace data is overwritten each time a trigger signal is given.

[Setup values of F742~F745]

Default setting	Communication No.	Trace (monitor) function	Communication unit at tracing
0	FD00	Output frequency	0.01Hz
1	FD02	Frequency command value	0.01Hz
2	FD03	Output current	0.01%
3	FD04	Input voltage (DC detection)	0.01%
4	FD05	Output voltage	0.01%
5	FD15	Compensated frequency	0.01Hz
6	FD16	Speed feedback (real-time value)	0.01Hz
7	FD17	Speed feedback (1-second filter)	0.01Hz
8	FD18	Torque	0.01%
9	FD19	Torque command	0.01%
11	FD20	Torque current	0.01%
12	FD21	Exciting current	0.01%
13	FD22	PID feedback value	0.01
14	FD23	Motor overload factor (OL2 data)	0.01%
15	FD24	Inverter overload factor (OL1 data)	0.01%
16	FD25	Regenerative braking resistance overload factor (OLr data)	1%
17	FD28	Regenerative braking resistor load factor (% ED)	1%
18	FD29	Input power	0.01kW
19	FD30	Output power	0.01kW
23	FE39	Optional AI2 input	0.01%
24	FE35	RR/S4 input	0.01%
25	FE36	VI/II input	0.01%
26	FE37	RX input	0.01%
27	FE38	Optional AI1 input	0.01%
28	FE40	FM output	0.01%
29	FE41	AM output	0.01%
34	FE76	Integral input power	0.01kWhr
35	FE77	Integral output power	0.01kWhr
46	FE60	My function monitor 1	1c
47	FE61	My function monitor 2	1c
48	FE62	My function monitor 3	1c
49	FE63	My function monitor 4	1c

■ **Acquisition of trace data**

Trace data is acquired through a communication device.
The VF-AS1 supports the protocols listed below.

- RS485 (Standard protocol)

■ **Trace data communication number**

Communication No.	Function	Minimum setting /readout unit	Setting/readout range	Default setting
E000	Trace data 1~4 pointer	1/1	0~99	0
E100	Data 1 of trace data 1	1/1	0~FFFF	0
	Data 2~99 of trace data 1	1/1	0~FFFF	0
E199	Data 100 of trace data 1	1/1	0~FFFF	0
E200	Data 1 of trace data 2	1/1	0~FFFF	0
	Data 2~99 of trace data 2	1/1	0~FFFF	0
E299	Data 100 of trace data 2	1/1	0~FFFF	0
E300	Data 1 of trace data 3	1/1	0~FFFF	0
	Data 2~99 of trace data 3	1/1	0~FFFF	0
E399	Data 100 of trace data 3	1/1	0~FFFF	0
E400	Data 1 of trace data 4	1/1	0~FFFF	0
	Data 2~99 of trace data 4	1/1	0~FFFF	0
E499	Data 100 of trace data 4	1/1	0~FFFF	0

Ex.) When operation frequency data is acquired through a communication device

Data acquired (1F40) h=8000 ⇒ 8000×0.01Hz=80.0Hz

■ **Relationship between pointer and data**

The table below shows the relationship between pointer (E000 set value) and trace data (1 to 4).

Pointer (E000 set value)	0	1	2	~	98	99
Trace data 1（E100～E199）	E100	E101	E102	~	E198	E199
Trace data 2（E200～E299）	E200	E201	E202	~	E298	E299
Trace data 3（E300～E399）	E300	E301	E302	~	E398	E399
Trace data 4（E400～E499）	E400	E401	E402	~	E498	E499

<Example of setting> If E000 is set to 2:

	(Earliest data)				(Latest data)
Trace data 1	E102	~	E199,	E100,	E101
Trace data 2	E202	~	E299,	E200,	E201
Trace data 3	E302	~	E399,	E300,	E301
Trace data 4	E402	~	E499,	E400,	E401

Note 1: Use the parameters F742 through F745 to specify the types of trace data (1 to 4).

Note 2: Communication numbers E000 is automatically incremented by the inverter when data is traced continuously.

* In ordinary cases, these parameters do not need to be rewritten.

6.38 Integrating wattmeter

F748 : Integrating wattmeter retention selection
F749 : Integrating wattmeter display unit selection

●**Function**

At the main power off ,it is selectable whether retention of integral output power values or not.
And also, the display unit is selectable.
The integrating wattmeter display can be cleared by external input signal by assignment of the terminal function. Input terminal function 74, 75 (Integrating wattmeter display clear)

Title	Function	Adjustment range	Default setting
F748	Integrating wattmeter retention selection	0: Disabled 1: Enabled	0
F749	Integrating wattmeter display unit selection	0: 1 = 1 kWh 1: 1 = 10 kWh 2: 1 = 100 kWh 3: 1 = 1000 kWh 4: 1 = 10000 kWh	Accoding to model ⇒ Refer to page K-46.

6.39 Communication function

6.39.1 2-wire RS485/4-wire RS485

F800 : Communication speed (2-wire RS485)
F801 : Parity (common to 2-wire RS485 and 4-wire RS485)
F802 : Inverter number (common)
F803 : Communications time-out time (common to 2-wire RS485 and 4-wire RS485)
F804 : Communications time-out action (common to 2-wire RS485 and 4-wire RS485)
F805 : Send waiting time (2-wire RS485)
F806 : Master/slave setting for Inverter-to-inverter communications (2-wire RS485)
F807 : Protocol selection (2-wire RS485)
F808 : Communication1 time-out condition selection
F810 : Frequency point selection
F811 : Point 1 setting
F812 : Point 1 frequency
F813 : Point 2 setting
F814 : Point 2 frequency
F820 : Communication speed (4-wire RS485)
F825 : Send waiting time (4-wire RS485)
F826 : Inverter-to-inverter communication setting (4-wire RS485)
F829 : Protocol selection (4-wire RS485)
F870, F871 : Block write data 1, 2
F875~F879 : Block read data 1~5
F880 : Free notes

⇒ For details, see Instruction Manual (E6581315) specified in Section 6.42.

•Function

These parameters allow you to connect the inverter to a higher-level system (host) and to set up a network for data communications between inverters. They make it possible for the inverter to be linked to a computer and to carry out data communications with other inverters.

<Computer link function>

This function allows the inverter to carry out data communications with a higher-level system (host).

(1) Monitoring inverter status (such as the output frequency, current, and voltage)
(2) Sending RUN, STOP and other control commands to the inverter
(3) Reading, editing and writing inverter parameter settings

<Inverter-to-inverter communication function>

This function allows you to set up a network that makes it possible to carry out proportional operation of multiple inverters (without using a computer).

- Timer function ..... Designed to detect broken communications cables. If no data is sent to the inverter within the specified time, this function trips the inverter ("Err5" is displayed on the display panel) or gives an alarm ("t" is displayed).
- Broadcast function ..... Refers to the function of issuing a command (data writing) to multiple inverters in one session.
- Inverter-to-inverter communication function .. Refers to the function that enables the master inverter to send the data selected with a parameter to all slave inverters on the same network. This function allows you to set up a network that makes it possible to carry out synchronized operation or proportional operation (setting of point frequencies) in an abbreviated manner.

1) 2-wire RS485

The 2-wire RS485 device on the operation panel and the 4-wire RS485 device on the control circuit terminal block are intended for data communications between inverters. To use an optional part for the RS485 device, it should be connected to the communication connector (RJ45) on the operation panel. Through the 2-wire RS485 device and a USB device (optional), the inverter can be linked to a computer.

Here are the parts optionally available for the 2-wire RS485 device.

- Optional USB-to-Serial conversion unit (Model: USB001Z)
  Inverter-to-RS485/USB device interconnect cable (Model: CAB0011 (1m), CAB0013 (3m), CAB0015 (5m))
  RS485/USB device-to-computer interconnect cable. Use a commercially available USB1.1 or 2.0 cable. (Type: A-B, Cablelength: 0.25~1.5m)
- Optional LED Remote Keypad (Model: RKP002Z)
  Communication cable (Model:CAB0011 (1m), CAB0013 (3m), CAB0015 (5m))
- Optional LCD Remote Keypad (Model: RKP004Z)
  LCD special cable (Model:CAB0071 (1m), CAB0073 (3m), CAB0075 (5m), CAB00710 (10m))

Note: Do not connect the cable (CAB0011, 0013 or 0015) from the communication device to the optional LCD Remote Keypad. Or the inverter or the optinol LCD Remote Keypad could be damaged.

■ Setting for issuing run/stop commands from an external control device

Title	Function	Adjustment range	Default setting	Example of setting
CMOd	Command mode selection	0~4	0 (Terminal input enabled)	2 (2-wire RS485)

Note: When parameter F806 (setting for communications between inverters) is used, the setting CMOd=2 cannot be used for slave inverters.

■ Setting for issuing speed commands from an external control device

Title	Function	Adjustment range	Default setting	Example of setting
FMOd	Frequency setting mode selection 1	1~13	2 (RR/S4 input)	5 (2-wire RS485)

6

■ Communication parameters (2-wire RS485)

These parameters allow you to change the communication speed, parity check setting, inverter number, communication error trip timer setting, etc. from the operation panel or an external control device.

Title	Function	Adjustment range	Default setting
F800	Communication speed (2-wire RS485)	0:9600 bps, 1:19200 bps, 2:38400 bps	1
F801	Parity (common to 2-wire RS485 and 4-wire RS485)	0:Non parity, 1:Even parity 2:Odd parity	1
F802	Inverter number (common)	0~247	0
F803	Communications time-out time (common to 2-wire RS485 and 4-wire RS485)	0:OFF 1~100 sec.	0
F804	Communications time-out action * (common to 2-wire RS485 and 4-wire RS485)	Setting / 2-wire RS485 / 4-wire RS485 0 / No action / No action 1 / Alarm / No action 2 / Trip / No action 3 / No action / Alarm 4 / Alarm / Alarm 5 / Trip / Alarm 6 / No action / Trip 7 / Alarm / Trip 8 / Trip / Trip	8
F805	Send waiting time (2-wire RS485)	0.00:Normal communications 0.01~2.00 sec.	0.00
F806	Master/slave setting for Inverter-to-inverter communications (2-wire RS485)	0:Slave (issues a 0Hz command if something goes wrong with the master) 1:Slave (continues operation if something goes wrong with the master) 2:Slave (trips for emergency stop if something goes wrong with the master) 3:Master (sends a frequency command) 4:Master (sends an output frequency) 5:Master (sends a torque command) 6:Master (sends an output torque command)	0
F807	Protocol selection (2-wire RS485)	0:TOSHIBA, 1:MODBUS	0

Title	Function	Adjustment range	Default setting
F808	Communication1 time-out condition selection	0:Disconnection detection 1:When communication mode enable 2:1+Driving operation	0
F810	Frequency point selection	0:Disabled 1:2-wire RS485 2:4-wire RS485 3:Communication add option	0
F811	Point 1 setting	0~100 %	0
F812	Point 1 frequency	0.0~FH Hz	0.0
F813	Point 2 setting	0~100 %	100
F814	Point 2 frequency	0.0~FH Hz	Inverter with a model number ending with -WN, HN: 60.0 -WP: 50.0
F870	Block write data 1	0:Disabled 1:Command information 1 2:Command information 2 3:Frequency command 4:Terminal board output data 5:Communication analog output 6:Rotational speed instruction	0
F871	Block write data 2	Ditto	0
F875	Block read data 1	0:Deselect 1:Status information 2:Output frequency 3:Output current 4:Output voltage 5:Alarm information 6:PID feedback value 7:Input terminal board monitor 8:Output terminal board monitor 9:VI/II terminal board monitor 10:RR/S4 terminal board monitor 11:RX terminal board monitor 12:Input voltage (DC detection) 13:Speed feedback frequency 14:Torque 15:MY monitor 1 16:MY monitor 2 17:MY monitor 3 18:MY monitor 4 19:Free notes 20:Rotational speed	0
F876	Block read data 2	Ditto	0
F877	Block read data 3	Ditto	0
F878	Block read data 4	Ditto	0
F879	Block read data 5	Ditto	0
F880	Free notes	0~FFFF	0

* : No action ... No action is taken even if a timeout occurs.
Alarm ..... An alarm goes off if a timeout occurs.
The message "t" blinks at the left end of the operation panel.
Trip ..... The inverter trips when a communication time-over occurs.
The message "Err5" blinks on the operation panel.

Note: Changes to the parameters F800, F801 and F806 do not take effect until the power is turned off and then on again.

6

2) 4-wire RS485

The 4-wire RS485 device included as standard equipment, allows you to connect the inverter to a higher-level system (host) and to set up a network for data communications between inverters. It makes it possible for the inverter to be linked to a computer and to carry out data communications with other inverters.
The connector (RJ45) for the 4-wire RS485 device on the control circuit terminal block is used to connect to other inverters.

■ Transmission specifications

Item	Specifications
Interface	Compliant with RS485
Transmission path specification	Half-duplex type [Buss type (terminator resistor required at each end of system)]
Wiring type	Compatible with both 4-wire and 2-wire types
Transmission distance	Up to 500m (overall length of the cable)
Number of connectable units	Up to 32 units (including the host computer) Number of inverters that can be connected in a system: Up to 32 units
Synchronization scheme	Asynchronous
Transmission rate	Default: 19200 baud (parameter setting) Selectable from 9600/19200/38400 baud
Character transmission	ASCII mode : JIS X 0201 8-bit (ASCII) Binary code : Binary, 8-bit (fixed)
Stop bit length	Inverter receiving: 1 bit, Inverter sending: 2 bits
Error detection	Parity: Even, Odd, or None selectable by parameter setting; check sum method
Error correction	Not provided
Response monitoring	Not provided
Character transmission format	Reception: 11 bit, Sending: 12 bit (with parity)
Transmission waiting time setting	Possible
Others	Inverter's action at the occurrence of a communication timeout selectable from tripping/raising an alarm/doing nothing →When alarm is selected, "E" blinks at the left end of the operation panel When tripping is selected, "Err5" is displayed on the operation panel

■ Example of the connection of inverters linked to a computer
<Independent communication>
Perform computer-inverter connection as follows to send operation frequency commands from the host computer to inverter No. 3:

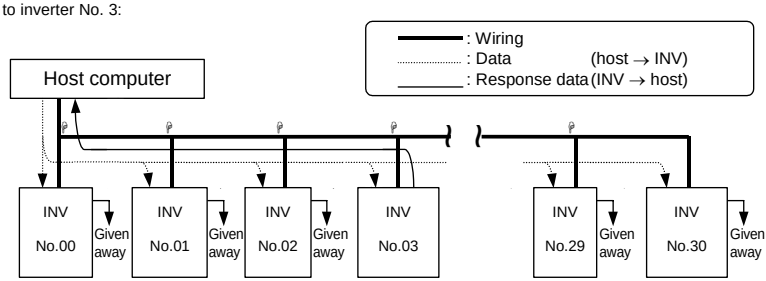

"Given away": Only the inverter with the selected inverter number conducts data processing. All other inverters, even if they have received the data, give it away and stand by to receive the next data.
: Use the terminal board to branch the cable.

(1) Data is sent from the host computer.
(2) Data from the computer is received at each inverter and the inverter numbers are checked.
(3) The command is decoded and processed only by the inverter with the selected inverter number.
(4) The selected inverter responds by sending the processing results, together with its own inverter number, to the host computer.
(5) As a result, only the selected inverter starts operating in accordance with the operation frequency command by communicating independently.

<Broadcast>

When an operation frequency command is broadcasted from the host computer to inverters

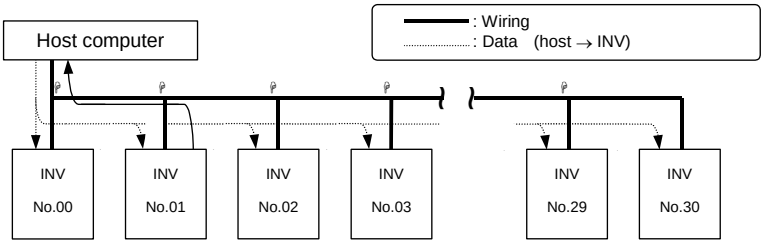

: Use the terminal board to branch the cable.

(1) Data is sent from the host computer.

(2) Data from the computer is received at each inverter and the inverter numbers are checked.

(3) Data with an asterisk (*) in the inverter number position is taken as broadcast data and the command is deciphered and executed.

(4) To avoid collisions between data, only the inverter with the asterisk (*) replaced with a zero (0) returns data to the host computer.

(5) As a result, all inverters connected are operated at the operation frequency specified by the command broadcasted.

Note: If an inverter number is assigned to each group of inverters, data can be broadcasted on a group-by-group basis.
(This function is usable only in ASCII mode. For binary mode, see Instruction Manual (E6581315) specified in Section 6.42.)
Ex.) When the inverter number *1 is specified, data is broadcasted to inverters Nos. 01, 11, 21, 31, ... 91.
At that time, data is returned by the inverter bearing number 01.

6

■ Inverter-to-inverter communication

When all slave inverters are connected they operat at the same frequency as the master inverter (no setting of point frequencies in this case)

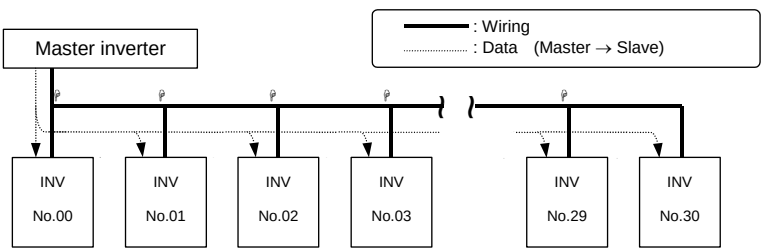

: Use the terminal board to branch the cable.

(1) The master inverter transmits frequency command data to its slave inverters.

(2) The slave inverter calculate a frequency reference from the data received and save the frequency calculated.

(3) As a result, all slave inverters operate at the same frequency as the master inverter.

Note: The master inverter always sends frequency command data to its slave inverters.
The slave inverters are always on standby so that they can receive an frequency command from the master inverter at anytime.

■ Setting for issuing run/stop commands from an external control device

Title	Function	Adjustment range	Default setting	Example of setting
CMOd	Command mode selection	0~4	0 (Terminal input enabled)	3 (4-wire RS485)

Note: When parameter F826 (setting for communications between inverters) is used, the setting CMOd=3 cannot be used for slave inverters.

■ Setting for issuing speed commands from an external control device

Title	Function	Adjustment range	Default setting	Example of setting
FMOd	Frequency setting mode selection 1	1~13	2 (RR/S4 input)	6 (4-wire RS485)

■ Communication parameters (4-wire RS485)
These parameters allow you to change the communication speed, parity, inverter number, communication error trip timer setting, etc. from the operation panel or an external control device.

Title	Function	Adjustment range	Default setting
F801	Parity (common to 2-wire RS485 and 4-wire RS485)	0:Non parity 1:Even parity 2:Odd parity	1
F802	Inverter number (common)	0~247	0
F803	Communications time-out time (common to 2-wire RS485 and 4-wire RS485)	0:OFF 1~100 sec.	0
F804	Communications time-out action * (common to 2-wire RS485 and 4-wire RS485)		8

Setting	2-wire RS485	4-wire RS485
0	No action	No action
1	Alarm	No action
2	Trip	No action
3	No action	Alarm
4	Alarm	Alarm
5	Trip	Alarm
6	No action	Trip
7	Alarm	Trip
8	Trip	Trip

Title	Function	Adjustment range	Default setting
F808	Communication1 time-out condition selection	0:Disconnection detection 1:When communication mode enable 2:1+Driving operation	0
F810	Frequency point selection	0:Disabled 1:2-wire RS485 2:4-wire RS485 3:Communication add option	0
F811	Point 1 setting	0~100 %	0
F812	Point 1 frequency	0.0~FH Hz	0.0
F813	Point 2 setting	0~100 %	100
F814	Point 2 frequency	0.0~FH Hz	Inverter with a model number ending with –WN, HN: 60.0 -WP: 50.0
F820	Communication speed (4-wire RS485)	0:9600 bps, 1:19200 bps, 2:38400 bps	1
F825	Send waiting time (4-wire RS485)	0.00:Default, 0.01~2.00 sec.	0.00
F826	Inverter-to-inverter communication setting (4-wire RS485)	0:Slave (issues a 0Hz command if something goes wrong with the master) 1:Slave (continues operation if something goes wrong with the master) 2:Slave (trips for emergency stop if something goes wrong with the master) 3:Master (sends a frequency command) 4:Master (sends an output frequency) 5:Master (sends a torque command) 6:Master (sends an output torque command)	0
F829	Protocol selection (4-wire RS485)	0:TOSHIBA 1:MODBUS	0

Title	Function	Adjustment range	Default setting
F870	Block write data 1	0:Disabled 1:Command information 1 2:Command information 2 3:Frequency command 4:Terminal board output data 5:Communication analog output	0
F871	Block write data 2	Ditto	0
F875	Block read data 1	0:Deselect 1:Status information 2:Output frequency 3:Output current 4:Output voltage 5:Alarm information 6:PID feedback value 7:Input terminal board monitor 8:Output terminal board monitor 9:VI/II terminal board monitor 10:RR/S4 terminal board monitor 11:RX terminal board monitor 12:Input voltage (DC detection) 13:Speed feedback frequency 14:Torque 15:MY monitor 1 16:MY monitor 2 17:MY monitor 3 18:MY monitor 4 19:Free notes	0
F876	Block read data 2	Ditto	0
F877	Block read data 3	Ditto	0
F878	Block read data 4	Ditto	0
F879	Block read data 5	Ditto	0
F880	Free notes	0~FFFF	0

* : No action ... No action is taken even if a timeout occurs.

Alarm ..... An alarm goes off if a timeout occurs.

The message "t" blinks at the left end of the operation panel.

Trip ..... The inverter trips when a communication time-over occurs.

The message "Err5" blinks on the operation panel.

Note: Changes to the parameters F801, F820 and F826 do not take effect until the power is turned off and then on again.

6

6.39.2 Open network option

F576~F594 : For Ethernet Communication option
F784~F789 : MAC address data 1~6
F792~F799 : Device name data 1~8
F815 : Address monitor (Modbus plus)
F816 : Command selection (Modbus plus)
F817 : Number of command (Modbus plus)
F818 : Number of monitors (Modbus plus)
F819 : Command station (Modbus plus)
F821 : Baud rate (Ethernet)
F822 : Baud rate monitor right port (Ethernet)
F823 : Baud rate monitor left port (Ethernet)
F824 : - (Reservation)
F830~F838 : Communication option settings 1 to 7
F841~F848 : Communication option settings 8 to 13
F849 : Disconnection detection extended time
F850 : Disconnection detection extended time
F851 : Inverter operation at disconnection
F852 : Preset speed operation selection
F853, F854 : Selection of monitoring
F856 : Motor pairs of poles for communication

⇒ For details, refer to Instruction Manual (E6581281, E6581343) specified in Section 6.42.

6

6.40 My function

F900 : Input function target 11~F977 : My function selection

⇒ For details, refer to Instruction Manual (E6581335) specified in Section 6.42.

6.41 Traverse function

F980 : Traverse selection
F981 : Traverse acceleration time
F982 : Traverse deceleration time
F983 : Traverse step
F984 : Traverse jump step

⇒ For details, refer to Instruction Manual (E6581337) specified in Section 6.42.

6.42 Instruction manuals for optionally available devices and special functions

For details, refer to the instruction manual for each optional device or function.

No.	Description	Model number	Instruction Manual No.	Remarks
1	Light-load high-speed operation function	–	E6581327	–
2	PID control operation function	–	E6581329	–
3	Torque control operation function	–	E6581331	–
4	Current and speed control gain adjustment method	–	E6581333	–
5	My function	–	E6581335	–
6	Traverse function	–	E6581337	–
7	Switching between commercial power and inverter	–	E6581364	–
8	RS485 communication function	–	E6581315	–
9	Combination of the VFAS1 and a DC power supply	–	E6581432	–
10	Expansion I/O card 1 option	ETB003Z	E6581339	Attached to expansion I/O card 1 option
11	Expansion I/O card 2 option	ETB004Z	E6581341	Attached to expansion I/O card 2 option
12	PG feedback option	VEC004Z~ VEC007Z	E6581319	Attached to PG feedback option
13	DeviceNet option	DEV002Z	E6581295	Attached to DeviceNet option
14	DeviceNet option function	DEV002Z	E6581281	Detailed instruction manual
15	PROFIBUS-DP option	PDP002Z	E6581279	Attached to PROFIBUS –DP option
16	PROFIBUS-DP option function	PDP002Z	E6581343	Detailed instruction manual
17	CC-Link option	CCL001Z	E6581286	Attached to CC-Link option
18	CC-Link option function	CCL001Z	E6581288	Detailed instruction manual
19	LCD Remote Keypad	RKP004Z	E6581323	Attached to LCD Remote Keypad
20	LED Remote Keypad	RKP002Z	E6581277	Attached to LED Remote Keypad
21	Control power supply backup option	CPS002Z	E6581289	Attached to control power supply backup option
22	USB-to-Serial conversion unit	USB001Z	E6581282	Attached to USB-to-Serial conversion unit
23	USB-to-Serial conversion unit	USB001Z	E6581299	Attached in the strage device of USB-to-Serial conversion unit
24	Optional braking unit PB7	PB7-4200K PB7-4400K	E6581436	For 200kW or more units
25	Fin outside mounting kit (optional)	FOT***Z	E6581399 E6581400 E6581365	200V-15kW, 400V-18.5kW 200V-18.5~45kW, 400V-22~75kW 200V-55kW~, 400V-90kW~

7. Operation with external signal

7.1 External operation

The inverter can be freely controlled externally.
Parameters must be differently set depending on the operation method. Make sure of the operation method before setting parameters, and set parameters properly to the operation mode according to the procedure mentioned below.

[Steps in setting parameters]

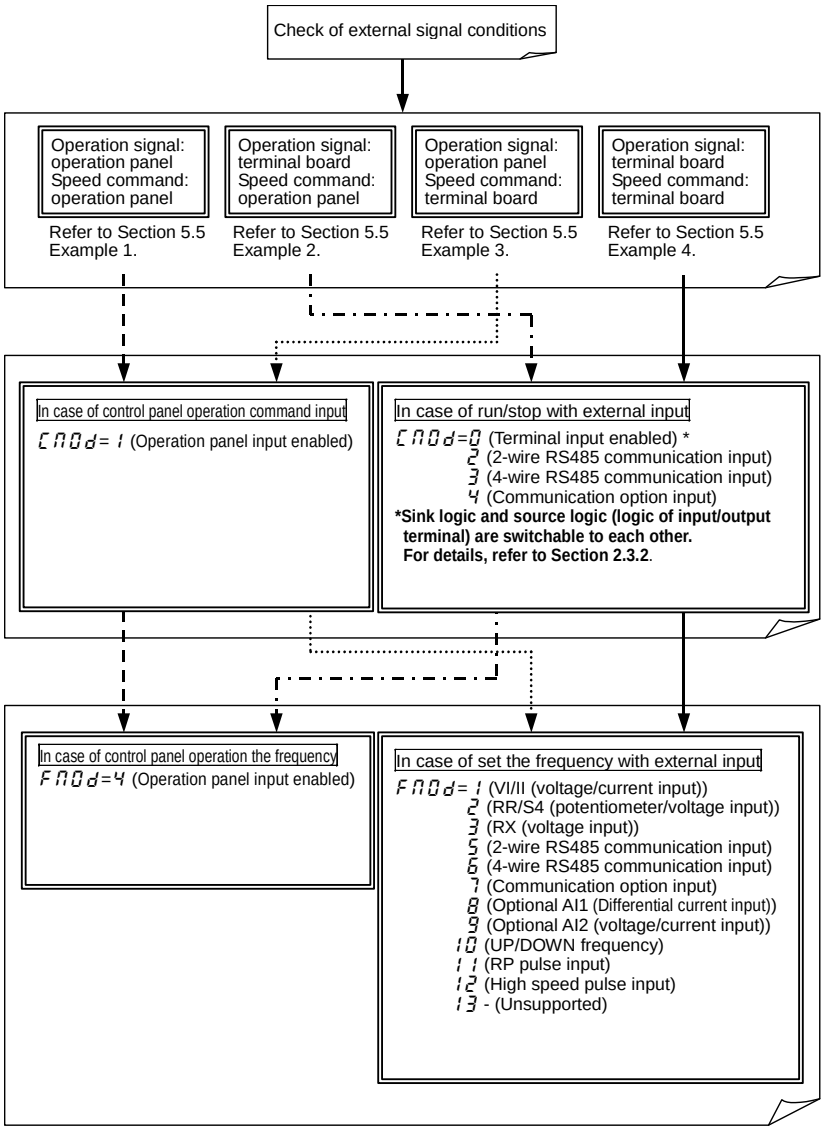

7.2 Applied operation with input and output signals (operation by terminal board)

7.2.1 Functions of input terminals (in case of sink logic)

Use the above parameters to send signals from an external programmable controller to various control input terminals to operate and/or set the inverter.

The desired contact input terminal functions can be selected from 120 types. This gives system design flexibility.

[Control terminal board]

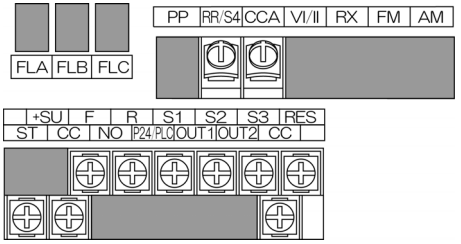

■ Setting of contact input terminal function

Terminal symbol	Title	Function	Adjustment range	Default setting
-	F110 [Note 5], F127, F128	Always ON function selection 1~3	0~135 ⇒ Refer to Section 7.2.1.	0 (No function is assigned)
F	F111	Input terminal function selection 1 (F)		2 (Forward run)
R	F112	Input terminal function selection 2 (R)		4 (Reverse run)
ST	F110 [Note 6], F113	Input terminal function selection 3 (ST)		6 (Standby)
RES	F114	Input terminal function selection 4 (RES)		8 (Reset)
S1	F115	Input terminal function selection 5 (S1)		10 (Preset speed 1)
S2	F116	Input terminal function selection 6 (S2)		12 (Preset speed 2)
S3	F117	Input terminal function selection 7 (S3)		14 (Preset speed 3)
RR/S4	F118	Input terminal function selection 8 (RR/S4)		16 (Preset speed 4)
LI1~LI8	F119~F126	Input terminal function selection 9~16		0
B12~B15	F164~F167	Input terminal function selection 17~20		0

Note 1:RR/S4 terminal become enable when SW3 is switch to S4.

Note 2: When F110, F127 and F128 (Always ON function selection 1~3) are selected, selected function is generally activated regardless of positive or negative logic.

Note 3: F119~F126 is for use of expansion terminal board option unit.

Note 4: F164~F167 is not supported (for options).

Note 5: VFAS1-****-WN, HN Note 6: VFAS1-****-WP

■ Connection method (An example of the connection of terminals: SW1 set to sink logic)

1) In case of positive logic (a-contact) input

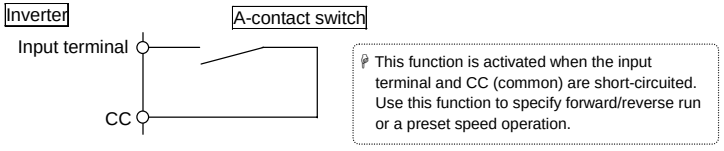

2) In case of negative logic (b-contact) input

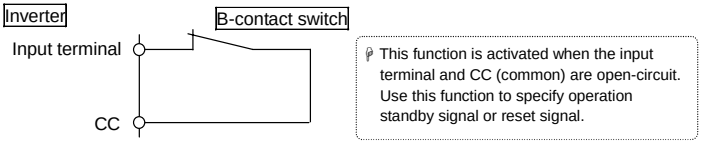

3) Connection with transistor output

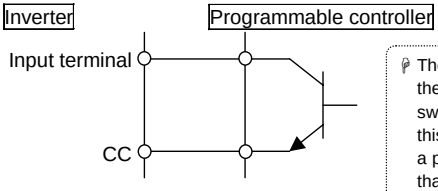

The inverter can be controlled by connecting the input terminal with output (contactless switch) of a programmable controller. Use this function to specify forward/reverse run or a preset speed operation. Use a transistor that operates on 24Vdc, 5mA power.

* Interface between programmable controller and inverter

When using an open-collector output type programmable control device to control the operation of a motor, connect cables, as shown in the schematic diagram for sink/source logic (when an external power supply is used) on page B-15. When using the internal power supply of the inverter, connect cables, as shown in the schematic diagram on page B-14. If the programmable control device is turned off with the inverter left on, an incorrect signal will flow into the inverter, as shown in the figure below, because there is a potential difference between the control power supplies. Be sure to provide an interlock so that the programmable controller cannot be turned off when the inverter is on.

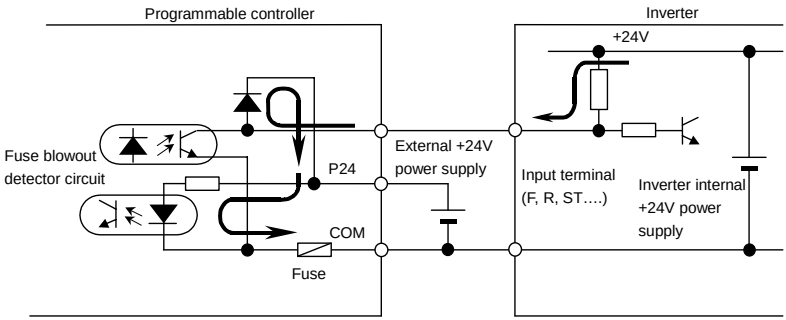

■ Example of use- three-wire operation (SW1 set to sink logic)

The three-wire operation function allows you to make the inverter self-hold its operation, without setting up a sequential circuit, so that the inverter can be operated by means of external signals (reset contact signals).

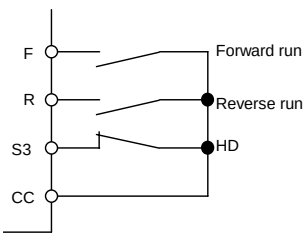

Forward run (F): If you press the Forward (F) button, the motor rotates in the forward direction at the frequency specified with a command.

Reverse run (R): If you press the Reverse (R) button, the motor rotates in the reverse direction at the frequency specified with a command.

HD (S3): If you press the HD (S3) button, the motor decelerates and comes to a stop.

[Parameter setting]

Terminal symbol	Title	Function	Adjustment range	Example of setting
S3	F117	Input terminal function selection 7(S3)	0～135	50 (HD operation retention)

■ Table of setting of contact input terminal function

Parameter setting		Function	Parameter setting		Function
Positive logic	Negative logic		Positive logic	Negative logic	
0	1	No function is assigned	70	71	Servo lock signal
2	3	F: Forward run command	72	73	Simple positioning (positioning loop)
4	5	R: Reverse run command	74	75	Integrating wattmeter display clear
6	7	ST: Standby	76	77	Trace back trigger signal
8	9	RES: Reset	78	79	Light-load high-speed operation prohibitive signal
10	11	S1: Preset speed 1	80	81	No function assigned
12	13	S2: Preset speed 2	82	83	No function assigned
14	15	S3: Preset speed 3	84	85	No function assigned
16	17	S4: Preset speed 4	86	87	Binary data write
18	19	Jog run	88	89	Up/down frequency (up) *1
20	21	Emergency stop	90	91	Up/down frequency (down) *1
22	23	DC braking	92	93	Up/down frequency (clear)
24	25	Acceleration/deceleration switching 1 *2	94	95	No function assigned
26	27	Acceleration/deceleration switching 2 *2	96	97	No function assigned
28	29	V/f switching signal 1 *2	98	99	Forward/reverse selection
30	31	V/f switching signal 2 *2	100	101	Run/stop command *3
32	33	Torque limit switching signal 1 *2	102	103	Commercial power/INV switching
34	35	Torque limit switching signal 2 *2	104	105	Frequency reference priority switching
36	37	PID control OFF selection	106	107	VI/II terminal priority
38	39	Pattern operation group 1	108	109	Command terminal board priority
40	41	Pattern operation selection 2	110	111	Permission of parameter editing
42	43	Pattern operation continuation signal	112	113	Speed/Torque switching
44	45	Pattern operation trigger signal	114	115	No function assigned
46	47	External thermal error	116	117	No function assigned
48	49	Communication priority cancel	118	119	No function assigned
50	51	HD operation retention	120	121	No function assigned
52	53	PID differentiation/integration clear	122	123	Rapidest deceleration command
54	55	PID forward/reverse switching	124	125	Preliminary excitation *4
56	57	Forced continuous operation	126	127	Braking request
58	59	Specified speed operation	128	129	No function assigned
60	61	Acceleration/deceleration suspend signal	130	131	Brake answer back input
62	63	Power failure synchronized signal	132	133	No function assigned
64	65	My function RUN signal	134	135	Traverse permission signal
66	67	Auto-tuning signal			
68	69	Speed gain switching			

*1: Valid when FMOd (Frequency setting mode selection 1) is set at 10 (Up/down frequency).
The frequency setting range is between =0.0~UL (Upper limit frequency). The acceleration/deceleration time with respect to the frequency setting remains ACCIdECC, unless switching between acceleration and deceleration is performed.

*2: To switch acceleration/deceleration pattern, V/f pattern, torque limit 1~4, give the following signals to switching functions.

	Switching signal 1	Switching signal 2
Acceleration/deceleration1, V/f 1, torque limit 1	OFF	OFF
Acceleration/deceleration2, V/f 2, torque limit 2	ON	OFF
Acceleration/deceleration3, V/f 3, torque limit 3	OFF	ON
Acceleration/deceleration4, V/f 4, torque limit 4	ON	ON

*3: If 2, 3 (F: Forward run command) or 4, 5 (R: Reverse run command) is assigned at the same time, this function has a priority.

*4: After the motor slows down and comes to a full stop at a pre-excitation command, the motor is set free momentarily to bring it into a pre-excitation state.
This function should not be used when F605 is set to 2 or 4. Or the inverter might malfunction.

*5: Do not set the function " Permission of parameter editing" into the parameter F119~F126 (without option) and 164~F167. If it is setted, can not reset the setting.

■ Sink logic/source logic

Switching between sink logic and source logic (input/output terminal logic) is possible.

⇒ For details, refer to the Section 2.3.2.

7.2.2 Functions of output terminals (incase of sink logic)

Use the above parameters to send various signals from the inverter to external equipment.

By setting parameters for the OUT1, OUT2 and FL (FLA, FLB and FLC) terminals on the terminal board, you can use 0~255 functions and functions obtained by combining them.

[Control terminal board]

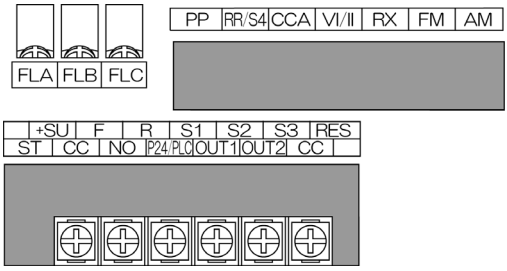

■ How to use

Function of OUT1·····To be set by parameter F130

Function of OUT2·····To be set by parameter F131

Functions of FLA, FLB, and FLC·····To be set by parameter F132

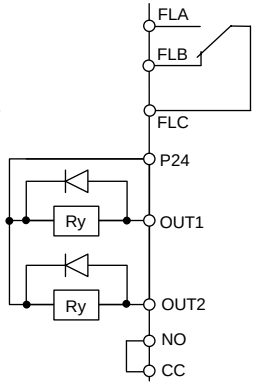

■ Setting of output terminal function

Terminal symbol	Title	Function	Adjustment range	Default setting
OUT1	F130	Output terminal function selection 1	0~255	4 (Low-speed signal)
OUT2	F131	Output terminal function selection 2	0~255	6 (Acceleration/deceleration completion)
FL	F132	Output terminal selection 3	0~255	10 (Failure FL)
OUT3~OUT6 R1~R2	F133~F138	Output terminal function selection 4~9	0~255	254
R3, R4	F168, F169	Output terminal function selection 10~11	0~255	254

Note1: F133~F135 is for use of expansion terminal board 1 option unit.

Note2: F136~F138 is for use of expansion terminal board 2 option unit.

Note3: F168, F169 is not supported (for options).

Note4: When use OUT1 terminal for pulse output function, refer to Section 6.35.1.

■ Output terminal function (open collector, relay outputs) setting and detection levels

For the open connector output terminals (OUT1, OUT2) and the relay output terminals (FLA, FLB and FLC), functions can be selected from 0 to 255 functions. The selectable functions and detection levels are listed in the table below.

Up to 7 output terminals can be used if add-on options are used in combination with the inverter, while up to 3 output terminals can be used if no add-on option is used.

<Technical terms>

- Alarm ·····Alarm output beyond a certain setting value.
- Pre-alarm ·····Alarm output of the state where the inverter may carry out a trip by continuation.
- Serious failure ·····Output signal in a serious failure of the protection function of the inverter. (Arm overcurrent (OCA 1, 2, 3), Load side overcurrent (OCL), Short-circuiting (EF 1, EF2), Phase failure (EPH0, EPH 1), Abnormal output current detection (Err 7))
- Light failure ·····Output signal in a slight failure of the protection function of the inverter. (Overload (OL 1,2), overvoltage (OP 1, 2, 3), overcurrent during acceleration/deceleration/fixed speed operation (OC 1, 1P, 2, 2P, 3, 3P))
- Emergency stop ·····Output signal when the inverter comes into emergency stop. Stopping manner is set with F603 (emergency stop).

Table of output terminal functions and detection levels

Parameter setting		Function	Operation output specifications (in case of positive logic)
Positive logic	Negative logic		
0	1	Lower limit frequency (LL)	ON:The running frequency is equal to or higher than the setting of LL (Lower limit frequency) OFF:The running frequency is lower than the setting of LL.
2	3	Upper limit frequency (UL)	ON:The running frequency is equal to or higher than the setting of UL (Upper limit frequency) OFF:The running frequency is lower than the setting of UL.
4	5	Low-speed signal	ON:The running frequency is equal to or higher than the setting of F100 (low-speed signal output frequency) OFF:The running frequency is lower than the setting of F100.
6	7	Acceleration/deceleration completion	ON:The difference between the frequency command and the running frequency is within the setting of F102. OFF:In acceleration or deceleration.
8	9	Speed reach signal	ON:The running frequency is in the range of F101 ± F102. OFF:The running frequency is out of the range of F101 ± F102.
10	11	Failure FL (All trips)	ON:Inverter is tripped. OFF:Inverter trip is canceled.
12	13	Failure FL (Except EF, OCL)	ON:Inverter is tripped (except EF and OCL) OFF:Inverter trip is canceled. (reset)
14	15	Overcurrent (OC) pre-alarm	ON:Inverter output current is over the F601 (Stall prevention level) set value. OFF:Inverter output current is under the F601.
16	17	Inverter overload (OL1) pre-alarm	ON:A certain rate of inverter overload (OL 1) detection time is over. OFF:The detection time is within a certain limit.
18	19	Motor overload (OL2) pre-alarm	ON:A certain rate of inverter overload (OL2) detection time is over. OFF:The detection time is within a certain limit.
20	21	Overheat pre-alarm	ON:The temperature of the cooling fin is 95°C or higher inside the inverter. OFF:The temperature drops to 90°C or lower after overheat pre-alarm was on.
22	23	Overvoltage pre-alarm	Overvoltage control operation or PB operation in progress. ON: PB operation level + 3% (200V class: Approx. 370Vdc, 400V class :Approx. 740Vdc)
24	25	Undervoltage in main circuit (MOFF) detection	ON:The main circuit voltage is lower than the main circuit undervoltage detection (F625) level. (200V class: Approx. 170Vdc, 400V class: Approx. 340Vdc)
26	27	Low current detection	ON: The state that inverter output current is F611 set value or larger continued more than F612 set value.

Parameter setting		Function	Operation output specifications (in case of positive logic)
Positive logic	Negative logic		
28	29	Over-torque detection	ON:The state that torque component is F616, F617 set value or larger continued more than F618 set value.
30	31	Braking resistor overload pre-alarm	ON:A certain rate of braking resister overload trip (OLr) detection time is over. OFF:The detection time is within a certain limit.
32	33	In emergency stop	ON:In emergency stop operation (E is indicated). OFF:The detection time is within a certain limit.
34	35	In retry	ON:In retry operation (rtry is indicated). OFF:No retry operation is performed.
36	37	Pattern operation switching output	ON:In normal operation or pattern operation has finished. OFF:In pattern operation.
38	39	PID deviation limit	ON:PID deviation is in F364 or F365 set value.
40	41	Run/Stop	ON:Running frequency is output or DC injection breaking (db) is performed.
42	43	Serious failure (OCA, OCL, EF, phase failure, etc.)	ON:Serious failure (OCA, OCL, EF, phase failure, abnormal output, short-circuit) is detected. OFF:Inverter has recovered from serious failure. (Serious failure has been reset)
44	45	Light failure (OL, OC1, 2, 3, OP)	ON:Light failure (OL, OC1, OC2, OC3, OP) is detected. OFF:Inverter has recovered from light failure. (Light failure has been reset)
46	47	Commercial power/inverter switching output 1	Refer to Section 6.19.
48	49	Commercial power/inverter switching output 2	Refer to Section 6.19.
50	51	Cooling fan ON/OFF	ON:Cooling fan is in operation. OFF:Cooling fan is off operation.
52	53	In jogging operation (In jog run)	ON:In jog run OFF:In normal operation
54	55	Operation panel/terminal board operation switching	ON:In operation by terminal board. OFF:In operation by operation panel.
56	57	Cumulative operation time alarm	ON:Cumulative operation time is beyond the F621 set value. OFF:Cumulative operation time is less than the F621 set value.
58	59	PROFIBUS/DeviceNet/CC-Link communication error	ON:Communication error occurred. OFF:Communication error is canceled (reset).
60	61	Forward/reverse switching	OFF:In forward operation. ON:In reverse operation. It output command status while operation is stopped. (When command status is not active, It will be "OFF")
62	63	Ready for operation 1	ON:In operable status or operation can be started with frequency command input as an operation switching answer-back. OFF:In inoperable status.
64	65	Ready for operation 2	ON:In operable status or operation can be started with ST and RUN signals and frequency command input. OFF:In inoperable status.
68	69	Brake release (BR)	Output the braking signal according to the brake sequence.
70	71	In (pre-)alarm status	ON:More than one of alarm, pre-alarm, undervoltage, low current over-torque, poor control power supply, PID deviation limit, abnormal frequency setting or torque limit have occurred or detected. OFF:All the alarms above are canceled.
72	73	Forward speed limit (torque control)	ON:Forward operation speed is F426 set value or over. OFF:Forward operation speed is less than F426 set value.
74	75	Reverse speed limit (torque control)	ON:Reverse operation speed is F428set value or over. OFF:Reverse operation speed is less than F428 set value.
76	77	Inverter healthy output	ON and OFF are alternately output at intervals of 1 second.
78	79	RS485 communication error	ON:Communication error occurred. OFF:Communication error is canceled (reset).
80	81	Error code output 1	Output the error code in 6-bit.
82	83	Error code output 2	
84	85	Error code output 3	
86	87	Error code output 4	
88	89	Error code output 5	
90	91	Error code output 6	

7

Parameter setting		Function	Operation output specifications (in case of positive logic)
Positive logic	Negative logic		
92	93	Specified data output 1	Output of the designated data in 7-bit.
94	95	Specified data output 2	
96	97	Specified data output 3	
98	99	Specified data output 4	
100	101	Specified data output 5	
102	103	Specified data output 6	
104	105	Specified data output 7	
106	107	Light load output	ON:Load is equal to F335~F338 set values or less.
108	109	Heavy load output	ON:Load is larger than F335~F338 set value.
110	111	Positive torque limit	ON:Positive torque is over the positive torque limit level.
112	113	Negative torque limit	ON:Negative torque is over the positive torque limit level.
114	115	Output for external rush suppression relay	ON:External rush suppression relay is actuated.
118	119	Completion of stop positioning	ON:Stop positioning has been completed.
120	121	L-STOP	ON:Operation at the lower limit frequency is performed continuously.
122	123	Power failure synchronized operation	ON:Power failure synchronized operation is performed.
124	125	Traverse in progress	ON:Traverse operation is performed.
126	127	Traverse deceleration in progress	ON:Traverse deceleration operation is performed.
128	129	Part replacement alarm	Alarm:The time of replacement of parts is approaching.
130	131	Over-torque pre-alarm	ON: 70% of the F616 or F617 setting level is detected.
132	133	Frequency command 1/ 2 selection	ON:Frequency command selection 2 is selected.
134	135	Failure FL (Except emergency stop)	ON:A trip other than emergency stop has occurred.
222	223	My function output 1	ON:My function output 1 is ON.
224	225	My function output 2	ON:My function output 2 is ON.
226	227	My function output 3	ON:My function output 3 is ON.
228	229	My function output 4	ON:My function output 4 is ON.
230	231	My function output 5	ON:My function output 5 is ON.
232	233	My function output 6	ON:My function output 6 is ON.
234	235	My function output 7	ON:My function output 7 is ON.
236	237	My function output 8	ON:My function output 8 is ON.
238	239	My function output 9	ON:My function output 9 is ON.
240	241	My function output 10	ON:My function output 10 is ON.
242	243	My function output 11	ON:My function output 11 is ON.
244	245	My function output 12	ON:My function output 12 is ON.
246	247	My function output 13	ON:My function output 13 is ON.
248	249	My function output 14	ON:My function output 14 is ON.
250	251	My function output 15	ON:My function output 15 is ON.
252	253	My function output 16	ON:My function output 16 is ON.
254	255	Always OFF (for terminal signal tests)	Output signal always OFF

Note 1: “ON” in positive logic : Open collector output transistor or relay is turned on.
“OFF” in positive logic : Open collector output transistor or relay is turned off.
“ON” in negative logic : Open collector output transistor or relay is turned off.
“OFF” in negative logic : Open collector output transistor or relay is turned on.

Note 2: Alarm output check conditions are as follows.
(1) Undervoltage detected :To be checked during operation.
(2) Low current detected : To be checked during operation command.
(3) Overtorque detected : To be checked always.

■ Sink logic/source logic

Sink logic and source logic (logic of input/output terminal) can be switched to each other.

⇒ For details, refer to Section 2.3.2.

7.2.3 Setup of input terminal operation time

•Function
The input/output terminal operation time setup function is used to extend response time if there is something malfunctioning because of noise or chattering of input relay.

■ Setup of response time

Title	Function	Adjustment range	Default setting
F140	Input terminal 1 response time selection (F)	2~200 ms	8
F141	Input terminal 2 response time selection (R)	2~200 ms	8
F142	Input terminal 3 response time selection (ST)	2~200 ms	8
F143	Input terminal 4 response time selection (RES)	2~200 ms	8
F144	Input terminal 5~12 response time selection	2~200 ms	8
F145	Input terminal 13~20 response time selection	5~200 ms	8

: Setting when vector option unit or expansion terminal board option is used.

Note: Response time is time to receive the terminal signal. The reflection to the inverter output in actual has the delay of several further ms.

7.2.4 Analog input filter

•Function
This function is effective to remove noise from the frequency setting circuit. If operation is unstable because of noise, increase the time constant of the analog input filter.

■ Response time setting

Title	Function	Adjustment range	Default setting
F209	Analog input filter	0:No filter 1:Filter approx. 10ms 2:Filter approx. 15ms 3:Filter approx. 30ms 4:Filter approx. 60ms	0

7

7.3 Setup of external speed command (analog signal)

Function of analog input terminals can be selected from four functions (external potentiometer, 0 to 10Vdc, 4 (0) to 20mAdc, -10 to +10Vdc). The selective function of analog input terminals gives system design flexibility.
⇒ Refer to Section 6.28 for fine adjustment of analog setting signal and output frequency.

[Control terminal board]

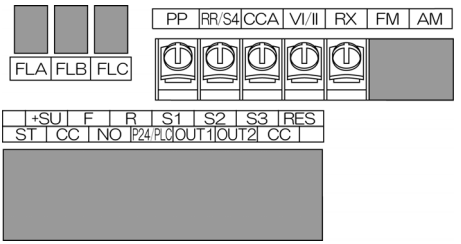

■ Setting of analog input terminal functions

Terminal symbol	Title	Function	Adjustment range	Default setting
-	F200	Frequency priority selection	0:FM0d/F207 terminal switching (input terminal function selection 104, 105) 1:FM0d/F207 frequency switching (switch by F208)	0
VI/II	F201	VI/II input point 1 setting	0~ 100 %	0
	F202	VI/II input point 1 frequency	0.0~FH Hz	0.0
	F203	VI/II input point 2 setting	0~ 100 %	100
	A1F2	VI/II input point 2 frequency	0.0~FH Hz	*1
-	F207	Frequency setting mode selection 2	Same as FM0d (1~ 13)	1
-	F208	Speed command priority switching frequency	0.1~FH	0.1
All	F209	Analog input filter	0 (No filter)~3 (Max. filter)	0
RR/S4	F210	RR/S4 input point 1 setting	0~ 100 %	0
	F211	RR/S4 input point 1 frequency	0.0~FH Hz	0.0
	F212	RR/S4 input point 2 setting	0~ 100 %	100
	AuF2	RR/S4 input point 2 frequency	0.0~FH Hz	*1
RX	F216	RX input point 1 setting	- 100~ 100 %	0
	F217	RX input point 1 frequency	0.0~FH Hz	0.0
	F218	RX input point 2 setting	- 100~ 100 %	100
	F219	RX input point 2 frequency	0.0~FH Hz	*1
Option	F222 ~F231	AI1, AI2 input point setting	For details, see Instruction Manual (E6581341) specified in Section 6.41.	
	F234 ~F237	RP/high speed pulse input point setting	For details, see Instruction Manual (E6581319) specified in Section 6.41.	

*1: Inverter with a model number ending with -WN, HN: 60.0 -WP: 50.0
Note 1: Input terminals of AI1 and AI2 are at expansion TB option unit.
Note 2: Input terminals of RP/high speed pulse is at PG feedback device option unit.

7.3.1 Setup by analog input signals (RR/S4 terminal)

If a potentiometer (1~10kΩ-1/4W) for setting up frequency is connected with the RR/S4 terminal, the inverter can be run and stopped with external commands.

For bringing this function into practice, connect a potentiometer to the terminals of PP, RR/S4 and CC so as to divide the reference voltage (10Vdc) at the terminal PP and to input 0 to 10Vdc of divided voltage between the RR/S4 and CC terminals.

If analog voltage signal of 0 to 10Vdc is input between the terminals of RR/S4 and CC, frequency can be set up without connection of a potentiometer.

Title	Function	Adjustment range	Default setting	Example of setting
CMOd	Command mode selection	0~4	0 (Terminal)	0 (Terminal)
FMOd	Frequency setting mode selection 1	1~13	2 (RR/S4)	2 (RR/S4)
FMSL	FM terminal meter selection	0~64	0	1
FM	FM terminal meter adjustment	-	-	-
F200	Frequency priority selection	0, 1	0	0
F209	Analog input filter	0 (No filter)~3 (Max. filter)	0	0
F210	RR/S4 input point 1 setting	0~100 %	0	0
F211	RR/S4 input point 1 frequency	0.0~FH Hz	0.0	0.0
F212	RR/S4 input point 2 setting	0~100 %	100	100
AuF2	RR/S4 input point 2 frequency	0.0~FH Hz	*1	*1

*1: Inverter with a model number ending with -WN, HN: 60.0 -WP: 50.0

«An example of the connection of terminals: SW1 set to sink logic»

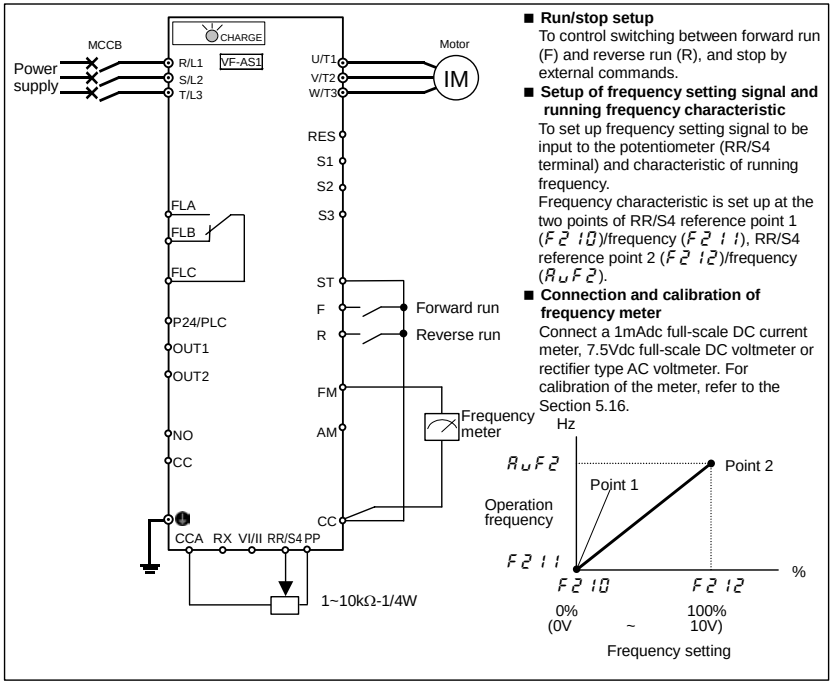

■ **Run/stop setup**
To control switching between forward run (F) and reverse run (R), and stop by external commands.

■ **Setup of frequency setting signal and running frequency characteristic**
To set up frequency setting signal to be input to the potentiometer (RR/S4 terminal) and characteristic of running frequency.
Frequency characteristic is set up at the two points of RR/S4 reference point 1 (F210)/frequency (F211), RR/S4 reference point 2 (F212)/frequency (AuF2).

■ **Connection and calibration of frequency meter**
Connect a 1mAdc full-scale DC current meter, 7.5Vdc full-scale DC voltmeter or rectifier type AC voltmeter. For calibration of the meter, refer to the Section 5.16.

7.3.2 Setup by analog input signals (VI/II terminal)

Connect current signal (4 (0) to 20mAdc) or voltage signal (0 to 10Vdc) to the terminal II so that the inverter can be run and stopped with external commands.

Title	Function	Adjustment range	Default setting	Example of setting	
				4 (0)~20mAdc	0~10Vdc
CMOd	Command mode selection	0~4	0 (Terminal)	0 (Terminal)	0 (Terminal)
FMOd	Frequency setting mode selection 1	1~13	2 (RR/S4)	1 (VI/II)	1 (VI/II)
FMSL	FM terminal meter selection	0~64	0	1	1
FM	FM terminal meter adjustment	-	-	-	-
F108	Analog VI/II voltage/current switching	0: Voltage input 1: Current input	0	1	1
F200	Frequency priority selection	0, 1	0	0	0
F201	VI/II input point 1 setting	0~100 %	0	20.0	0.0
F202	VI/II input point 1 frequency	0.0~FH Hz	0.0	0.0	0.0
F203	VI/II input point 2 setting	0~100 %	100	100	100
AIF2	VI/II input point 2 frequency	0.0~FH Hz	*1	*1	*1
F209	Analog input filter	0 (No filter)~3 (Max. filter)	0	0	0

*1: Inverter with a model number ending with -WN, HN: 60.0 -WP: 50.0

«An example of the connection of terminals: SW1 set to sink logic»

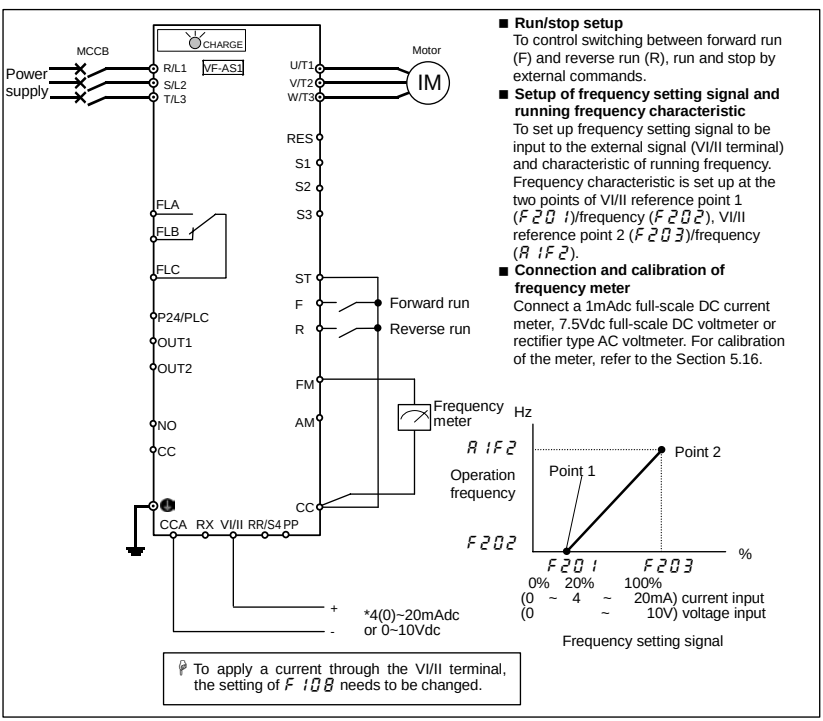

■ **Run/stop setup**
To control switching between forward run (F) and reverse run (R), run and stop by external commands.

■ **Setup of frequency setting signal and running frequency characteristic**
To set up frequency setting signal to be input to the external signal (VI/II terminal) and characteristic of running frequency. Frequency characteristic is set up at the two points of VI/II reference point 1 (F201)/frequency (F202), VI/II reference point 2 (F203)/frequency (AIF2).

■ **Connection and calibration of frequency meter**
Connect a 1mAdc full-scale DC current meter, 7.5Vdc full-scale DC voltmeter or rectifier type AC voltmeter. For calibration of the meter, refer to the Section 5.16.

7.3.3 Setup by analog input signals (RX terminal)

Connect voltage signal (0 to ±10Vdc) to the terminal RX so that the inverter can be run and stopped with external commands.

Title	Function	Adjustment range	Default setting	Example of setting
CMOd	Command mode selection	0~4	0 (Terminal)	0 (Terminal)
FMOd	Frequency setting mode selection 1	1~13	2 (RR/S4)	3 (RX)
FMSL	FM terminal meter selection	0~64	0	1
FM	FM terminal meter adjustment	-	-	-
F200	Frequency priority selection	0, 1	0	0
F209	Analog input filter	0 (No filter)~3 (Max. filter)	0	0
F216	RX input point 1 setting	-100~100 %	0	0
F217	RX input point 1 frequency	0.0~FH Hz	0.0	0.0
F218	RX input point 2 setting	-100~100 %	100	100
F219	RX input point 2 frequency	0.0~FH Hz	*1	*1

*1: Inverter with a model number ending with -WN, HN: 60.0 -WP: 50.0

«An example of the connection of terminals: SW1 set to sink logic»

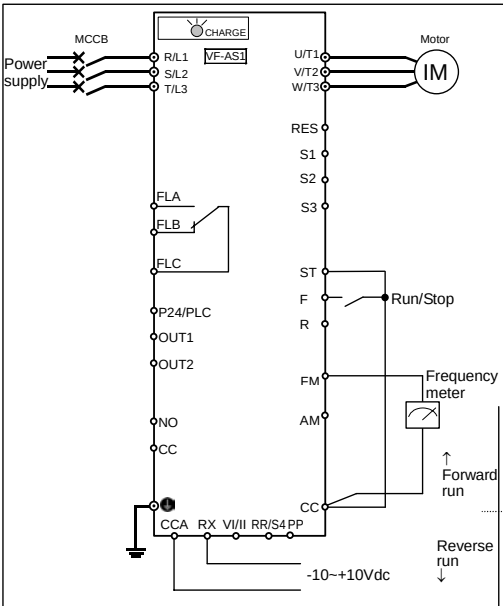

■ **Run/stop setup**
Run/stop operation by means of external commands.

■ **Setup of frequency setting signal and running frequency characteristic**
To set up frequency setting signal to be input to the external signal (RX terminal) and characteristic of running frequency. Frequency characteristic is set up at the two points of RX reference point 1 (F216)/frequency (F217), RX reference point 2 (F218)/frequency (F219).

■ **Connection and calibration of frequency meter**
Connect a 1mAdc full-scale DC current meter, 7.5Vdc full-scale DC voltmeter or rectifier type AC voltmeter.
For calibration of the meter, refer to the Section 5.16.

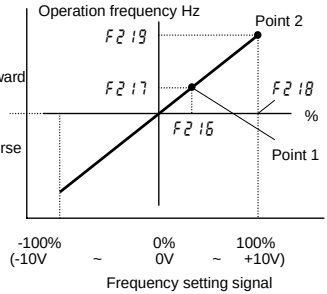

*: Regardless of open/closed circuit between R and CC terminals, run and stop operation is controllable.
Switching between forward run and reverse run is controllable by the terminals F/R and RX if reverse run prohibition selection F311 is properly set up.
⇒ For details, refer to Section 6.14.4.

8. Monitoring the operation status

8.1 Screen composition in the status monitor mode

The status monitor mode is used to monitor the operation status of the inverter.
⇒ For modes available and instructions about how to switch them, refer to section 3.1.
Here is the screen composition in the status monitor mode.

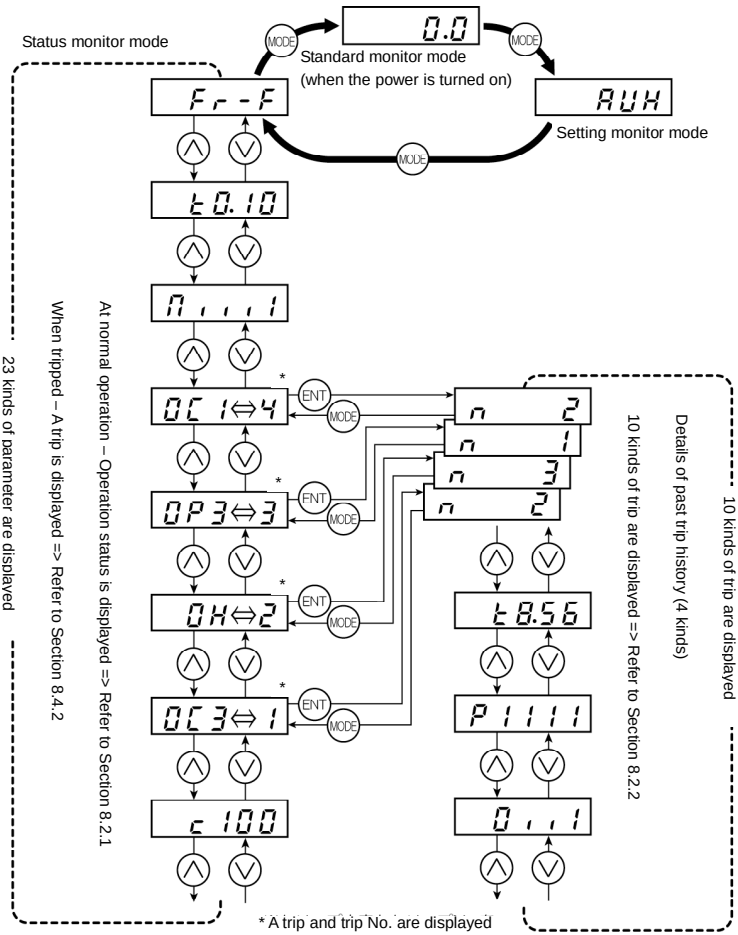

8

8.2 Monitoring the status

8.2.1 Status monitor under normal conditions

In this mode, you can monitor the operation status of the inverter.

To monitor the inverter when it is normally running, press the MODE key **twice** and the current status is indicated on the LED display.

Setting procedure (EX.: operation at 60 Hz)

	Communication No.	Item displayed	Key operated	LED display	Description
*1	-	Standard monitor mode		60.0	The output frequency is displayed (during operation). (When standard monitor display selection F710 is set to 0 [Output frequency])
	FE01	Setting monitor mode	MODE	AUX	The first basic parameter "History function (AUX)" is displayed.
	FE01	Status monitor mode (Rotating direction)	MODE	Fr-F	The rotating direction is displayed. (F:Forward run, r:Reverse run)
*2	-	Frequency command value	∧	60.0	The operation frequency command value is displayed. (When F711=1, Frequency command)
*3	-	Output current	∧	C 80	The inverter output current (load current) is displayed. (When F712=2, Output current)
*4	-	Input voltage (DC detection)	∧	V100	The Inverter DC voltage (default setting: unit %) is displayed.(When F713=3, Input voltage) [Note 3]
*5	-	Output voltage	∧	P100	The inverter output voltage (default setting: unit %) is displayed.(When F714=4, output voltage)
*6	-	Torque	∧	9100	The torque is displayed. (When F715=8 torque)
*7	-	Regenerative braking resistance overload factor (PBrOL data)	∧	r 0	The regenerative braking resistance overload factor is displayed. (When F716=16, regenerative braking resistance overload factor)
*8	-	Inverter overload factor (OL1 data)	∧	O 0	The inverter overload factor is displayed. (When F717=15, inverter overload factor)
*9	-	Motor overload factor	∧	L100	The motor overload factor (default setting: unit %) is displayed. (When F718=14, Motor overload factor)
	FE00	Output frequency	∧	60.0	The output frequency is displayed.
	FE06	Input terminal information 1	∧	11111111	The ON/OFF status of each of the control signal input terminals (F, R, ST, RES, S1, S2, S3, RR/S4) is displayed in bits.
		Input terminal information 2	∧	A 1111	The ON/OFF status of each of the optional control signal input terminals (LI1, LI2, LI3, LI4) is displayed in bits.
		Input terminal information 3	∧	b 1111	The ON/OFF status of each of the optional control signal input terminals (LI5, LI6, LI7, LI8) is displayed in bits.
[Note 4]	FE07	Output terminal information 1	∧	O 111	The ON/OFF status of each of the control signal output terminals (OUT1, OUT2, FL) is displayed in bits.
		Output terminal information 2	∧	11111111	The ON/OFF status of each of the optional control signal output terminals (OUT3, OUT4, R1, OUT5, OUT6, R2, R3, R4) is displayed in bits.

(Continued overleaf)

(Continued)

	Communication No.	Item displayed	Key operated	LED display	Description
	FE08	CPU1 version	∧	u 100	The version of the CPU1 is displayed.
	FE73	CPU2 version	∧	c 100	The version of the CPU2 is displayed.
[Note 5]	FE10	Past trip 1	∧	0C3⇔1	Past trip 1 (displayed alternately at 0.5-sec. intervals)
[Note 5]	FE11	Past trip 2	∧	0H ⇔2	Past trip 2 (displayed alternately at 0.5-sec. intervals)
[Note 5]	FE12	Past trip 3	∧	0P3⇔3	Past trip 3 (displayed alternately at 0.5-sec. intervals)
[Note 5]	FE13	Past trip 4	∧	nErr⇔4	Past trip 4 (displayed alternately at 0.5-sec. intervals)
[Note 6]	FE79	Part replacement alarm information	∧	n ,,,1	The ON/OFF status of each of the cooling fan, circuit board capacitor, main circuit capacitor or part replacement alarm of cumulative operation time is displayed in bits. ON: 1 OFF: , n ,,,1 Cumulative operation time Cooling fan Control circuit board capacitor Main circuit capacitor
[Note 7]	FE14	Cumulative operation time	∧	t 0.10	The cumulative operation time is displayed. (Indication of 0.1 represents 10 hours.)
		Default display mode	MODE [Note 1]	60.0	The operation frequency is displayed (during operation).

Note 1: Press the ∧ ∨ keys to change items displayed in the status monitor mode.

Note 2: Contents of status indications of *1, *2, *3, *4, *5, *6, *7, *8, and *9 can be selected from 44 kinds of information.
Contents of status indications that are set up at F710 (standard monitor display selection) and F711~F718 (status monitor 1 to 8 display selection) are displayed.
Unit of current and voltage indications can be changed from % to A (ampere)/V (volt) and vice versa respectively. ⇒ Refer to Section 5.15.

Note 3: Indicated input voltage is DC voltage just after input voltage is rectified multiplied by $1/\sqrt{2}$.

Note 4: The number of bars displayed varies depending on the setting of F669 (logic output/pulse train output selection.)
The bar representing the OUT1 terminal is displayed only when logic output function is assigned to it.
If F669=0: The bar representing OUT1 is displayed.
If F669= 1: The bar representing OUT1 is not displayed.

Note 5: Past rip records are displayed in the following sequence: 1 (latest trip record) ⇔2⇔3⇔4 (oldest trip record).
If there is no trip record, nErr is displayed.
Details on past trip record 1, 2, 3 or 4 can be displayed by pressing the ENT key when past trip 1, 2, 3 or 4 is displayed. ⇒ For more details, refer to Section 8.2.2.

Note 6: The part replacement alarm is displayed based on the value calculated from the annual average ambient temperature, operation time and load current specified using F634.
Use this alarm as a guide only, since it is based on a rough estimation.

Note 7: The cumulative operation time increments only when the machine is in operation.

■ Input terminal information

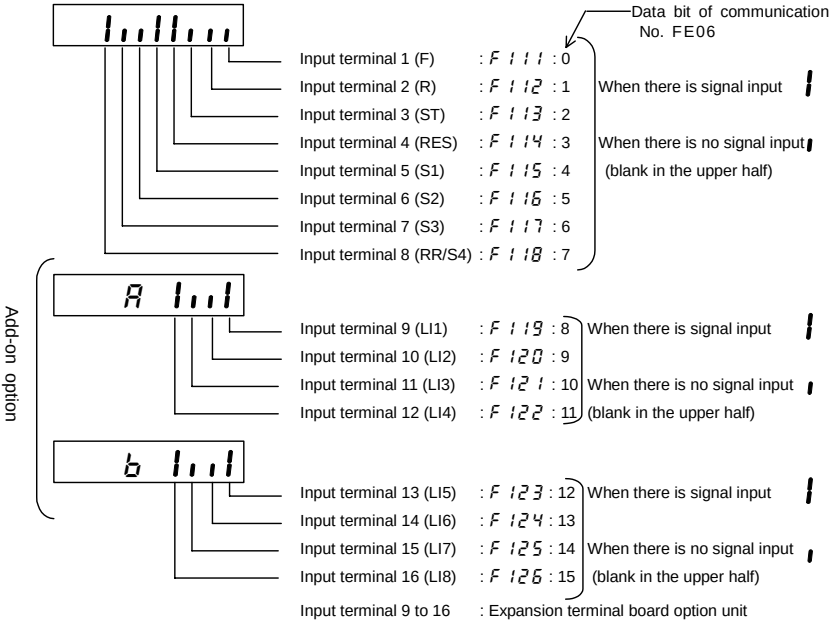

■ Output terminal information

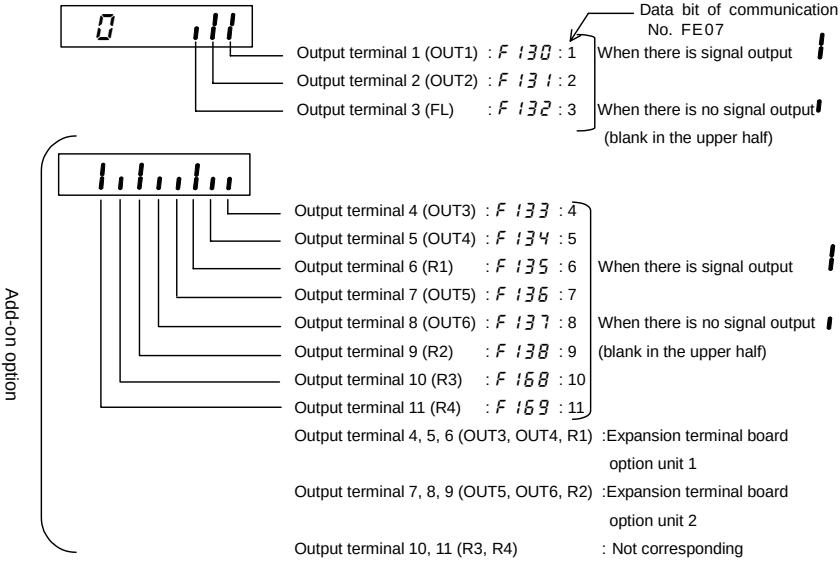

■ Cumulative operation time

For indication of cumulative operation hours, running hours are counted up when the output frequency monitor reads a frequency other than 0.0Hz. 10 hours is indicated as 0.1 (unit of Indication).

8.2.2 Display of detailed information on a past trip

Details on a past trip (of trips 1 to 4) can be displayed, as shown in the table below, by pressing the ENT key when the trip record is selected in the status monitor mode.
Unlike the " Monitor display at tripping " in 8.4.2, details on a past trip can be displayed, even after the inverter is turned off or reset.

	Item displayed	Key operated	LED display	Description
[Note 5]	Past trip 1		OC 1 ⇔ 1	Past trip 1 (displayed alternately.)
	Continuous trips	ENT	n 2	The number of time the same trip occurred in succession is displayed. (OCA1, OCA2, OCA3, OCL Unit: times)
[Note 1]	Output frequency	∧	60.0	The operation frequency when the trip occurred is displayed.
	Status monitor mode (Rotating direction)	∧	Fr-F	The direction of rotation is displayed. (F:Forward run, r:Reverse run)
	Frequency command value	∧	60.0	The operation frequency command value is displayed. (When F711= 1, Frequency command)
[Note 2]	Output current	∧	C 80	The inverter output current (load current) is displayed. (When F712=2, Output current)
[Note 2] [Note 3]	Input voltage (DC detection)	∧	Y 100	The inverter DC voltage is displayed. (Default setting unit: %) (When F713=3, Input voltage) [Note 3]
[Note 2]	Output voltage	∧	P 100	The inverter output voltage is displayed. (Default setting unit: %) (When F714=4, output voltage)
	Input terminal information	∧	11111111	The ON/OFF status of each of the control signal input terminals (F, R, ST, RES, S1, S2, S3, RR/S4) is displayed in bits.
[Note 4]	Output terminal information	∧	0 111	The ON/OFF status of each of the control signal output terminals (OUT1, OUT2, FL) is displayed in bits.
[Note 6]	Cumulative operation time	∧	t8.56	The cumulative operation time when the trip occurred is displayed. (0.01=1 hour, 1.00=100 hours)
	Past trip 1	MODE	OC 1⇔ 1	Press this key to return to past trip 1.

Note 1: Press the ∧ or ∨ key to change items displayed in the status monitor mode.

Note 2: You can switch between % and A (ampere)/V (volt), using the parameter dSPU (current/voltage unit selection).

Note 3: The input voltage displayed is $1/\sqrt{2}$ times as large as the rectified DC input voltage.

Note 4: The number of bars displayed varies depending on the setting of F669 (logic output/pulse train output selection). The bar representing the OUT1 terminal is displayed only when logic output function is assigned to it.

If F669=0 :The bar representing OUT1 is displayed.

If F669= 1 :The bar representing OUT1 is not displayed.

Note 5: If there is no trip record, nErr is displayed.

Note 6: The cumulative operation time increments only when the machine is in operation.

8

8.3 Changing status monitor function

■ Changing the display format while power is on

The item displayed in the standard monitor mode (*1 on the left side of table on page H-2), for example, operation frequency which is displayed by default in this way: "=0.0" when power is on or "OFF" when power is off, can be changed to any item shown on page H-7. This new format, however, will not display an assigned prefix such as t or C.

・Standard monitor mode ⇒ Standard monitor display selection (F710)

Title	Function	Adjustment range	Default setting
F709	Standard monitor hold function	0:Real time 1:Peak hold 2:Minimum hold	0
F710	Standard monitor display selection	0~70 ⇒ Refer to page H-7.	0

Specify how to output the monitored values that are assigned to status monitors 1 through 8.

If F709 is set to 0, the monitored values selected with F710 (standard monitor display selection parameter) are displayed one after another.

For peak hold values and minimum hold values, the minimum values in each operation mode are displayed. When the motor is at a standstill, the values monitored last are held as they were until the motor is started the next time. The maximum and minimum values monitored after power is turned on or after the reset with the EASY key are always displayed no matter whether the motor is in operation or at a standstill.

■ Changing contents of status monitor indication

Regarding contents of status monitor indications appearing in the left column of the table on page H-2, those marked with *2 to *9 can be changed for others. Select a desirable monitor function from among optional monitor functions appearing on page H-7.

*2 Frequency command ⇒ Changeable by status monitor 1 display selection (F711).
*3 Output current ⇒ Changeable by status monitor 2 display selection (F712).
*4 Input voltage ⇒ Changeable by status monitor 3 display selection (F713).
*5 Output voltage ⇒ Changeable by status monitor 4 display selection (F714).
*6 Torque ⇒ Changeable by status monitor 5 display selection (F715).
*7 Regenerative braking resistance overload factor ⇒ Changeable by status monitor 6 display selection (F716).
*8 Inverter overload factor ⇒ Changeable by status monitor 7 display selection (F717).
*9 Motor overload factor ⇒ Changeable by status monitor 8 display selection (F718).

Title	Function	Adjustment range	Default setting
F711	Status monitor 1 display selection	0~70 ⇒ Refer to page H-7.	1
F712	Status monitor 2 display selection	Ditto	2
F713	Status monitor 3 display selection	Ditto	3
F714	Status monitor 4 display selection	Ditto	4
F715	Status monitor 5 display selection	Ditto	8
F716	Status monitor 6 display selection	Ditto	16
F717	Status monitor 7 display selection	Ditto	15
F718	Status monitor 8 display selection	Ditto	14

*If F711 to F718 are set at "0" (Output frequency) the operation frequency is not held in trip status.

[Setup values of monitor indication parameters (F710~F718)]

	Communication No.	Default setting	Item displayed	Marking	Unit (Panel)	Unit (Communication)
	FD00	0	Output frequency	60.0	0.1Hz [note 4]	0.01Hz
	FE02	1	Frequency command value	60.0	0.1Hz [note 4]	0.01Hz
	FE03	2	Output current	C 0	1% or dSPU	0.01%
	FE04	3	Input voltage (DC detection)	Y 0	1% or dSPU	0.01%
	FE05	4	Output voltage	P 0	1% or dSPU	0.01%
	FE15	5	Compensated frequency	60.0	0.1Hz [note 4]	0.01Hz
	FE16	6	Speed feedback (real-time value)	0	0.1Hz [note 4]	0.01Hz
	FE17	7	Speed feedback (1-second filter)	0	0.1Hz [note 4]	0.01Hz
[Note 5]	FE18	8	Torque	9 0	1%	0.01%
[Note 5]	FE19	9	Torque command	9 0	1%	0.01%
[Note 5]	FE20	11	Torque current	c 0	1%	0.01%
	FE21	12	Exciting current	C 0	1%	0.01%
	FE22	13	PID feedback value	0	0.1Hz [note 4]	0.01Hz
	FE23	14	Motor overload factor (OL2 data)	L 0	1%	0.01%
	FE24	15	Inverter overload factor (OL1 data)	G 0	1%	0.01%
	FE25	16	Regenerative braking resistance overload factor (OLr data)	r 0	1%	1%
	FE28	17	Regenerative braking resistance load factor (% ED)	r 0	1%	1%
[Note 5]	FE29	18	Input power	h 0	0.1kW	0.01kW
[Note 5]	FE30	19	Output power	H 0	0.1kW	0.01kW
	FE39	23	Optional AI2 input	J 0	1%	0.01%
	FE35	24	RR/S4 input	J 0	1%	0.01%
	FE36	25	VI/II input	J 0	1%	0.01%
	FE37	26	RX input	J 0	1%	0.01%
	FE38	27	Optional AI1 input	J 0	1%	0.01%
	FE40	28	FM output	A 0	1	0.01
	FE41	29	AM output	A 0	1	0.01
	(FA65)	31	Communication data output	[Note 3]	[Note 3]	[Note 3]
	FE66	32	Attached to expansion I/O card 1 CPU version	1.10	-	-
	FE67	33	Attached to expansion I/O card 2 CPU version	1.10	-	-
[Note 5]	FE76	34	Integral input power	h 0	Depends on F749	Depends on F749
[Note 5]	FE77	35	Integral output power	H 0	Depends on F749	Depends on F749
[Note 2]	FE00	50	Signed output frequency	60.0	0.1Hz [note 4]	0.01Hz
[Note 2]	FE02	51	Signed frequency command value	60.0	0.1Hz [note 4]	0.01Hz
[Note 2]	FE15	52	Signed compensated frequency	60.0	0.1Hz [note 4]	0.01Hz
[Note 2]	FE16	53	Signed speed feedback (real-time value)	0	0.1Hz [note 4]	0.01Hz
[Note 2]	FE17	54	Signed speed feedback (1-second filter)	0	0.1Hz [note 4]	0.01Hz
[Note 2,5]	FE18	55	Signed torque	9 0	1%	0.01%
[Note 2,5]	FE19	56	Signed torque command	9 0	1%	0.01%
[Note 2.5]	FE20	58	Signed torque current	c 0	1%	0.01%
[Note 2]	FE22	59	Signed PID feedback value	0	0.1Hz [note 4]	0.01Hz
[Note 2]	FE37	60	Signed RX input	J 0	1%	0.01%
[Note 2]	FE38	61	Signed optional AI2 input	J 0	1%	0.01%
	FD50	64	Light-load high-speed load torque monitor 1	L	1%	0.01%
	FD51	65	Light-load high-speed load torque monitor 2	H	1%	0.01%
	FE31	66	Pattern operation group number	P 1.0	0.1	0.1
	FE32	67	Remaining no. of cycles for which pattern operation is continued	n 123	1	1
	FE33	68	Pattern operation preset speed numbers	F 1	1	1
	FE34	69	Remaining time for which pattern operation is continued	123.4	0.1	0.1
	FE71	70	Rated voltage	u400	1	0.1
	FE90	71	Rotational speed	1234	1	1
	FA15	72	Communication reception counter	n 123	1	1
	FA16	73	Communication abnormal counter	n 123	1	1
	FE43	74	MON1	0	1%	0.01%
	FE44	75	MON2	0	1%	0.01%

(Continued overleaf)

8

(Continued)

Communication No.	Default setting	Item displayed	Marking	Unit (Panel)	Unit (Communication)
FE56	76	RP	0	0.1%	0.01%
FD85	77	COUNT1	1234	1	1
FD86	78	COUNT2	1234	1	1
FD52	79	PID result frequency	60.0	0.1Hz	0.01Hz
FE84	80	Synchronous speed frequency command	60.0	0.1Hz	0.01Hz

Note 1: If any value other than the values in the above table is specified, the number "9999" is displayed.

Note 2: If a negative value of signed signal is specified, the negative sign "-" is displayed. When the negative sign "-" is displayed, do not display "9", "C", "J". When read through by communications device, the negative sign is affixed only FE18~FE20, FE37 and FE38 values..

Note 3: Data set with FA65-FA79 is displayed.

⇒ For details, refer to Instruction Manual (E6581315) specified in Section 6.42.

Note 4: Unit of display is able to change depends on F702~F708 setting.

Note 5: If monitor this item, operate a motor in automatic torque boost mode or vector control mod (Pt=2,3,4,7 or 8)

8

8.4 Display of trip information

8.4.1 Trip code display

If the inverter trips, an error code is displayed to suggest the cause. In the status monitor mode, the status when the inverter trip is held.

■ Display of trip information

Error code	Description	Communication/Error code Communication No.:FC90
OC 1	Overcurrent during acceleration	1
OC2	Overcurrent during deceleration	2
OC3	Overcurrent during fixed speed operation	3
OC 1P	Overcurrent flowing in element during acceleration (Overheat)	37
OC2P	Overcurrent flowing in element during deceleration (Overheat)	38
OC3P	Overcurrent flowing in element during fixed speed (Overheat)	39
OCA1	U-phase arm overcurrent	5
OCA2	V-phase arm overcurrent	6
OCA3	W-phase arm overcurrent	7
OCL	Overcurrent (Loaded side overcurrent at start time)	4
OCr	Dynamic braking element overcurrent (200V-55kW or larger, 400V-90kW or larger)	36
OH	Overheating	16
OH2	Thermal trip stop command from external device	46
OL 1	Inverter overload	13
OL2	Motor overload	14
OLr	Dynamic braking resistor overload	15
OP 1	Overvoltage during acceleration	10
OP2	Overvoltage during deceleration	11
OP3	Overvoltage during fixed speed operation	12
Ot	Overtorque	32
UC	Low current operation	29
UP 1	Undervoltage (main circuit power supply)	30
E	Emergency stop	17
EEP 1	E E P ROM fault (writing error)	18
EEP2	Initial read error (parameter initialization)	19
EEP3	Initial read error (parameter initialization)	20
EF 1	Ground fault	33
EF2		34
EPH0	Output phase failure	9
EPH 1	Input phase failure	8
Err2	Inverter RAM fault	21
Err3	Inverter ROM fault	22
Err4	CPU fault	23
Err5	Communication time-out error	24
Err6	Gate array fault	25
Err7	Output current detector error	26
Err8	Optional unit fault	27
Etn	Tuning error except Etn1~3	40
Etn1	F410 tuning error	84
Etn2	F412 tuning error	85
Etn3	uL, uLu, F405~407 setting error	86
EtYP	Inverter type error	41
E-10	Analog input terminal overvoltage	42
E-11	Sequence error	43
E-12	Encoder error	44

(Continued overleaf)

(Continued)

Error code	Description	Communication/Error code Communication No.:FC90
E-13	Speed error (Over speed)	45
E-18	Terminal input error	50
E-19	Abnormal CPU2 communication	51
E-20	V/f control error	52
E-21	CPU1 fault	53
E-22	Abnormal logic input voltage	54
E-23	Option 1 error	55
E-24	Option 2 error	56
E-25	Stop position retaining error	57
E-26	Internal circuit error	58
E-29	Control power backup undervoltage	61
SOUt	Step-out (for PM motors only)	47
nErr (*)	No error	0

Note: Past trip records (trip records retained or trips that occurred in the past) can be called up.

⇒ See Section 8.2.1

(*) This is not a trip code. This code is displayed to show the absence of error when the past trip monitor mode is selected.

8.4.2 Monitor display at tripping

At the occurrence of a trip, the same information as that displayed in the mode described in 8.2.1, “Status monitor under normal conditions,” can be displayed, as shown in the table below, if the inverter is not turned off or reset.
To display trip information after turning off or resetting the inverter, follow the steps described in 8.2.2, “Display of detailed information a past trip.”

■ Example of call-up of trip information

	Communication No.	Item displayed	Key operated	LED display	Description
	FC90	Trip information		OP2	Status monitor mode (The code blinks if a trip occurs.) The motor coasts and comes to a stop (coast stop).
	-	Setting monitor mode	MODE	AUH	The first basic parameter “History function (AUH)” is displayed.
[Note 3]	FE01	Direction of rotation	MODE	Fr-F	The direction of rotation when the trip occurred is displayed.(F:Forward run, r:Reverse run)
*1	-	Frequency command value	∧	60.0	The operation command value when the trip occurred is displayed.
[Note 4] *2	-	Output current	∧	C 130	The inverter output current at tripping (load current) is displayed.
[Note 4] [Note 5] *3	-	Input voltage (DC detection)	∧	V 141	The inverter DC voltage at the occurrence of a trip is displayed.
[Note 4] *4	-	Output voltage	∧	P 100	The inverter output voltage at the occurrence of a trip is displayed.
*5	-	Torque	∧	q 100	The torque when the trip occurred is displayed.
*6	-	Regenerative braking resistance overload factor (PbrOL data)	∧	r 0	The regenerative braking resistance overload factor at tripping is displayed.
*7	-	Inverter overload factor (OL1 data)	∧	C 0	The inverter overload factor at tripping is displayed.
*8	-	Motor overload factor (OL2 data)	∧	L 100	The motor overload factor at tripping is displayed.
	FE00	Output frequency	∧	40.0	The output frequency when the trip occurred is displayed.
	FE06	Input terminal information 1	∧	11111111	The ON/OFF status of each of the control input terminals at tripping (F, R, ST, RES, S1, S2, S3, RR/S4) is displayed in bits.
		Input terminal information 2	∧	A 1111	The ON/OFF status of each of the optional control input terminals at tripping (LI1, LI2, LI3, LI4) is displayed in bits.
		Input terminal information 3	∧	b 1111	The ON/OFF status of each of the optional control input terminals at tripping (LI5, LI6, LI7, LI8) is displayed in bits.
[Note 6]	FE07	Output terminal information 1	∧	O 111	The ON/OFF status of each of the control output terminals at tripping (OUT1, OUT2 and FL) is displayed in bits.
		Output terminal information 2	∧	11111111	The ON/OFF status of each of the optional control output terminals (OUT3, OUT4, R1, OUT5, OUT6, R2, R3, R4) is displayed in bits.
	FE08	CPU1 version	∧	u 100	The version of the CPU1 is displayed.
	FE73	CPU2 version	∧	c 100	The version of the CPU2 is displayed.

(Continued overleaf)

8

(Continued)

	Communication No.	Item displayed	Key operated	LED display	Description
[Note 7]	FE10	Past trip 1	∧	0C3⇔1	Past trip 1 (displayed alternately at 0.5-sec. intervals)
[Note 7]	FE11	Past trip 2	∧	0H ⇔2	Past trip 2 (displayed alternately at 0.5-sec. intervals)
[Note 7]	FE12	Past trip 3	∧	0P3⇔3	Past trip 3 (displayed alternately at 0.5-sec. intervals)
[Note 7]	FE13	Past trip 4	∧	nErr⇔4	Past trip 4 (displayed alternately at 0.5-sec. intervals)
[Note 8]	FE79	Part replacement alarm information	∧	n ,,,1	The ON/OFF status of each of the cooling fan, circuit board capacitor, main circuit capacitor or part replacement alarm of cumulative operation time is displayed in bits. ON: 1 OFF: , n ,,,1 Cumulative operation time Cooling fan Control circuit board capacitor Main circuit capacitor
[Note 9]	FE14	Cumulative operation time	∧	t 0.1	The cumulative operation time is displayed. (Indication of 0.1 represents 10 hours.)
	-	Default display mode	MODE ×2	0P2	Status monitor mode (The code blinks if a trip occurs.) Reverts to the first trip indication.

Note 1: If trouble occurs while the CPU is being initialized after the inverter is turned on or reset, the trip record retaining function does not record it but displays a status monitor item.

Note 2: Contents of status indications of *1, *2, *3, *4, *5, *6, *7, and *8 can be selected from 44 kinds of information. Contents of status indications that are set up at F711~F718 (status monitor 1 to 8 display mode) are displayed.

Note 3: Items displayed when a trip occurs can be changed by pressing ∧ or ∨ key.

Note 4: You can switch between % and A (ampere)/V (volt), using the parameter dSPU (current/voltage unit selection).

Note 5: The input voltage displayed is $1/\sqrt{2}$ times as large as the rectified DC input voltage.

Note 6: The number of bars displayed varies depending on the setting of F669 (logic output/pulse train output selection). The bar representing the OUT-NO terminal is displayed only when logic output function is assigned to it.
If F669=0:The bar representing OUT-NO is displayed.
If F669= 1:The bar representing OUT-NO is not displayed.

Note 7: Past rip records are displayed in the following sequence: 1 (latest trip record) ⇔2⇔3⇔4 (oldest trip record). If there is no trip record, nErr is displayed.
Details on past trip record 1, 2, 3 or 4 can be displayed by pressing the ENT key when past trip 1, 2, 3 or 4 is displayed. ⇒ For more details, refer to Section 8.2.2.

Note 8: The time elapsed before an end of part replacement alarm is issued is calculated from the average yearly ambient temperature, operation time and load current entered using F634, and it is no more than an estimation, and therefore it should be used for reference purposes only.

Note 9: The cumulative operation time increments only when the machine is in operation.

Note 10: At the occurrence of a trip, maximum values are not always recorded and displayed for reasons of detecting time.

8.5 Display of alarm, pre-alarm, etc.

When the inverter alarm, pre-alarm, etc. occurred, the contents are displayed. (Some are not displayed.)
Listed below ones can be monitored via communication (FC91). Refer to 13.1 for the other alarms.

Bit	Description	Panel indication
0	Overcurrent pre-alarm	C
1	Inverter overload pre-alarm	L
2	Motor overload pre-alarm	L
3	Overheat pre-alarm	H
4	Overvoltage pre-alarm achieving PBR operation level	P
5	Main circuit undervoltage detected	nOFF
6	(Reservation area)	–
7	Low current alarm	–
8	Overtorque pre-alarm	–
9	Braking resistor overload pre-alarm	–
10	Cumulative operation time alarm	–
11	PROFIBUS/DeviceNet/CC-Link communication error	t 1
12	RS485 communication error	t2
13	(Reservation area)	–
14	Forced deceleration stop because of a momentary power failure	StOP
15	Pre-alarm stop because of prolonged lower-limit frequency operation	LStP

Note: For each bit, “0” indicates normal condition and “1” indicates appearance of alarm, etc.

9. Taking measures to satisfy the CE/UL/CSA standards

9.1 How to cope with the CE standard

In Europe, the EMC directive and the low-voltage directive, which took effect in 1996 and 1997, respectively, make it obligatory to put the CE mark on every applicable product to prove that it complies with the directives. Inverters do not work alone but are designed to be installed in a control panel and always used in combination with other machines or systems which control them, so they themselves are not considered to be subject to the EMC directive. However, the CE mark must be put on all inverters because they are subject to the low-voltage directive.

The CE mark must be put on all machines and systems with built-in inverters because such machines and systems are subject to the above directives. It is the responsibility of the manufacturers of such final products to put the CE mark on each one. If they are “final” products, they might also be subject to machine-related directives. It is the responsibility of the manufacturers of such final products to put the CE mark on each one. In order to make machines and systems with built-in inverters compliant with the EMC directive and the low-voltage directive, this section explains how to install inverters and what measures should be taken to satisfy the EMC directive.

We have tested representative models with them installed as described later in this manual to check for conformity with the EMC directive. However, we cannot check all inverters for conformity because whether or not they conform to the EMC direction depends on how they are installed and connected. Applicable EMC standards vary depending on the composition of the control panel in which the inverter is installed, the relationship with other electrical devices installed in the control panel, wiring conditions, equipment layout, and so on, so you should check whether your machine or system complies with EMC standards as a whole. Therefore, please verify for yourself whether your machine or system conforms to the EMC directive.

9.1.1 EMC directive

The CE mark must be put on every final product that includes an inverter(s) and a motor(s). The VF-AS1 series of inverters complies with the EMC directive if an EMC filter recommended by Toshiba is connected to it and wiring is carried out correctly.

The EMC standards are broadly divided into two categories; immunity- and emission-related standards, each of which is further categorized according to the operating environment of each individual machine. Since inverters are intended for use with industrial systems under industrial environments, they fall within the EMC categories listed in Table 1 below. The tests required for machines and systems as final products are almost the same as those required for inverters.

Table 1 (EMC standards)

Category	Subcategory	Product standards	Test standard
Emission	Radiated	IEC61800-3	CISPR11(EN55011)
	Conducted		
Immunity	Electrostatic discharge		IEC61000-4-2
	Radiated, radio-frequency, electromagnetic field		IEC61000-4-3
	Electrical fast transient burst		IEC61000-4-4
	Surge		IEC61000-4-5
	Conducted disturbances, induced by radio-frequency field		IEC61000-4-6
	Voltage dips, short interruptions and voltage variations		IEC61000-4-11

9.1.2 Measures to satisfy the EMC directive

Concrete measures for EMC directive of CE markings are shown below.

■ Models with a built-in EMC filter

(1) 200V class: VFAS1-2004PL~2075PL
400V class: VFAS1-4007PL~4500KPC
The above mentioned models install EMC noise filter inside. So the conducted and radiated noise can be reduced, optional EMC noise filters are not needed.
(If a further noise reduction is required, insert an additional filter described in I-4 on the input side of the inverter.)

Table 2 EMC directive compliance

Inverter type	EMC plate type	Requirements		Conducted noise IEC61800-3 category C2 (EN55011 classA Group1)	Conducted noise IEC61800-3 category C3 (EN55011 classA Group2)
		PWM carrier frequency CF (kHz)	Length of motor connecting cable (m)		
VFAS1-2004PL~ VFAS1-2015PL	EMP101Z	4	10	Built-in filter	-
		16	5		
VFAS1-2022PL	EMP102Z	4	10		
		16	5		
VFAS1-2037PL		4	10	-	Built-in filter
		16	5		
VFAS1-2055PL, VFAS1-2075PL	EMP103Z	4	10		
		16	5		
VFAS1-4007PL~ VFAS1-4022PL	EMP101Z	4	10	Built-in filter	-
		16	5		
VFAS1-4037PL	EMP102Z	4	10		
		16	5		
VFAS1-4055PL~ VFAS1-4110PL	EMP103Z	4	10	-	Built-in filter
		16	5		
VFAS1-4150PL	EMP104Z	4	10		
		16	5		
VFAS1-4185PL		2.5	25		
		16	25		
VFAS1-4220PL	EMP105Z	2.5	50		
		16	25		
VFAS1-4300PL, VFAS1-4370PL	EMP106Z	2.5	50		
		16	25		
VFAS1-4450PL~ VFAS1-4750PL	EMP108Z	2.5	50		
		16	25		
VFAS1-4900PC	-	2.5	50		
VFAS1-4110KPC	-	2.5	50		
VFAS1-4132KPC	-	2.5	50		
VFAS1-4160KPC	-	2.5	50		
VFAS1-4200KPC	-	2.5	50		
VFAS1-4220KPC	-	2.5	50		
VFAS1-4280KPC	-	2.5	50		
VFAS1-4355KPC, VFAS1-4400KPC,	-	2.5	50		
VFAS1-4500KPC,	-	2.5	50		

( ): An optional regenerative braking unit PB7 is used.

(2) Use shielded power cables and control signal cables for the input and output lines of the inverter. Route the cables and wires so as to minimize their lengths. Keep a distance between the power cable and the control cable and between the input and output wires of the power cable. Do not route them in parallel or bind them together, instead cross at right angle.

(3) Install the inverter in an enclosed steel cabinet, it is more effective in limiting the radiation. Using wires as thick and short as possible, earth the control panel securely with a distance kept between the earth cable and the power cable.

(4) To limit the radiation noise from cables, earth each shielded cable to the EMC plate. It is effective to earth shielded cables in the vicinity of the inverter and filter (within a radius of 10cm from each of them). Inserting a ferrite core in a shielded cable is even more effective in limiting the radiation noise.

(5) To further limit the radiation noise, insert a zero-phase reactor in the inverter output line and insert ferrite cores in the earth cables of the EMC and cabinet.

[Ex. Countermeasure - inverter wiring]

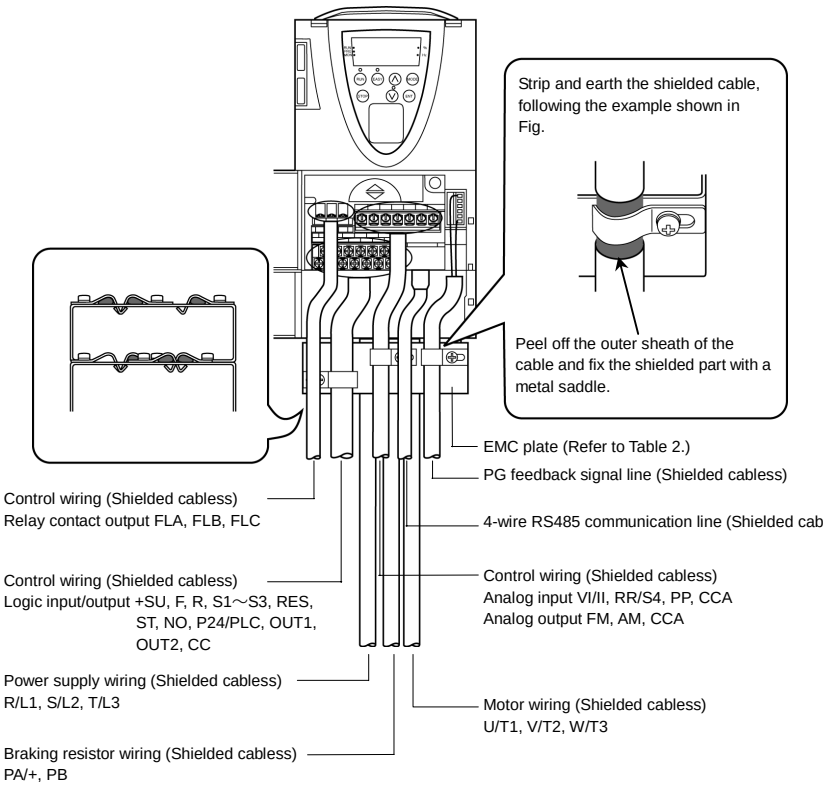

Fig. 1

9

■ When an external EMC filter is added

(1) Additional external EMC filters have the further effect of suppressing conduction and radiation noises. Use the recommended EMC noise filter specified in Table 3. This combination of inverter and filter was used when examining the inverter for compliance with the EMC directive.
Table 3 lists noise filters recommended for the inverters.

Table 3 Combinations of inverter and EMC filter

Inverter type	Requirements		Conducted noise IEC61800-3 category C2 (EN55011 classA Group1) Applicable filters	Conducted noise IEC61800-3 category C1 (EN55011 classB Group1) Applicable filters
	PWM carrier frequency CF (kHz)	Length of motor connecting cable (m)		
VFAS1-2004PL~ VFAS1-2015PL	3.5~4	50	EMF3-4012A	EMF3-4012A
		100	EMF3-4012A	-
	4.1~16	20	EMF3-4012A	EMF3-4012A
		50	EMF3-4012A	-
VFAS1-2022PL, VFAS1-2037PL	3.5~4	50	EMF3-4026B	EMF3-4026B
		100	EMF3-4026B	-
	4.1~16	25	EMF3-4026B	EMF3-4026B
		50	EMF3-4026B	-
VFAS1-2055PL	3.5~4	50	EMF3-4035C	EMF3-4035C
		100	EMF3-4035C	-
	4.1~16	25	EMF3-4035C	EMF3-4035C
		50	EMF3-4035C	-
VFAS1-2075PL	3.5~4	50	EMF3-4046D	EMF3-4046D
		100	EMF3-4046D	-
	4.1~16	25	EMF3-4046D	EMF3-4046D
		50	EMF3-4046D	-
VFAS1-2110PM, VFAS1-2150PM	2~4	50	EMF3-4072E	EMF3-4072E
		100	EMF3-4072E	-
	4.1~12	25	EMF3-4072E	EMF3-4072E
		50	EMF3-4072E	-
VFAS1-2185PM, VFAS1-2220PM	2~2.5	50	EMF3-4090F	EMF3-4090F
		100	EMF3-4090F	-
	2.6~12	25	EMF3-4090F	EMF3-4090F
		50	EMF3-4090F	-
VFAS1-2300PM~ VFAS1-2450PM	2~2.5	50	EMF3-4180H	EMF3-4180H
		100	EMF3-4180H	-
	2.6~12	25	EMF3-4180H	EMF3-4180H
		50	EMF3-4180H	-
VFAS1-2550P, VFAS1-2750P	2.5	100	EMF3-4300I	-
VFAS1-4007PL~ VFAS1-4022PL	3.5~4	50	EMF3-4012A	EMF3-4012A
		100	EMF3-4012A	-
	4.1~16	20	EMF3-4012A	EMF3-4012A
		50	EMF3-4012A	-
VFAS1-4037PL	3.5~4	50	EMF3-4026B	EMF3-4026B
		100	EMF3-4026B	-
	4.1~16	25	EMF3-4026B	EMF3-4026B
		50	EMF3-4026B	-
VFAS1-4055PL, VFAS1-4075PL	3.5~4	50	EMF3-4035C	EMF3-4035C
		100	EMF3-4035C	-
	4.1~16	25	EMF3-4035C	EMF3-4035C
		50	EMF3-4035C	-
VFAS1-4110PL	3.5~4	50	EMF3-4046D	EMF3-4046D
		100	EMF3-4046D	-
	4.1~16	25	EMF3-4046D	EMF3-4046D
		50	EMF3-4046D	-
VFAS1-4150PL, VFAS1-4185PL	2~4	100	EMF3-4072E	EMF3-4072E
		300	EMF3-4072E	-
	4.1~12	100	EMF3-4072E	EMF3-4072E
		200	EMF3-4072E	-

(Continued overleaf)

(Continued)

Inverter type	Requirements		Conducted noise IEC61800-3 category C2 (EN55011 classA Group1) Applicable filters	Conducted noise IEC61800-3 category C1 (EN55011 classB Group1) Applicable filters
	PWM carrier frequency CF (kHz)	Length of motor connecting cable (m)		
VFAS1-4220PL	2~4	100	EMF3-4090F	EMF3-4090F
		300	EMF3-4090F	-
	4.1~12	100	EMF3-4090F	EMF3-4090F
		200	EMF3-4090F	-
VFAS1-4300PL VFAS1-4370PL	2~2.5	100	EMF3-4092G	EMF3-4092G
		300	EMF3-4092G	-
	2.6~12	100	EMF3-4092G	EMF3-4092G
		200	EMF3-4092G	-
VFAS1-4450PL~ VFAS1-4750PL	2~2.5	100	EMF3-4180H	EMF3-4180H
		300	EMF3-4180H	-
	2.6~12	100	EMF3-4180H	EMF3-4180H
		200	EMF3-4180H	-
VFAS1-4900PC~ VFAS1-4132KPC	2.5	100	EMF3-4300I	-
VFAS1-4160KPC~ VFAS1-4280KPC	2.5	100	EMF3-4600J	-
VFAS1-4355KPC~ VFAS1-4500KPC	2.5	100	EMF3-4600J × 2	-

(2) Use shielded cables for the power and control cables, including filter input cables and inverter output cables. Route the cables and wires so as to minimize their lengths. Keep a distance between the power cable and the control cable and between the input and output wires of the power cable. Do not route them in parallel or bind them together, instead cross at right angle.

(3) Install the filter and the inverter in an enclosed steel cabinet, it is more effective in limiting the radiation. Earth the cabinet body securely with the thickest and shortest possible electric wire installed away from the power cables.

(4) Route the EMC filter input and output wires apart from each other.

(5) To limit the radiation noise from cables, earth each shielded cable to the EMC plate. It is effective to earth shielded cables in the vicinity of the inverter and filter (within a radius of 10cm from each of them). Inserting a ferrite core in a shielded cable is even more effective in limiting the radiation noise.

(6) To further limit the radiation noise, insert a zero-phase reactor in the inverter output line and insert ferrite cores in the earth cables of the EMC plate and cabinet.

[Ex. Countermeasure - inverter wiring]

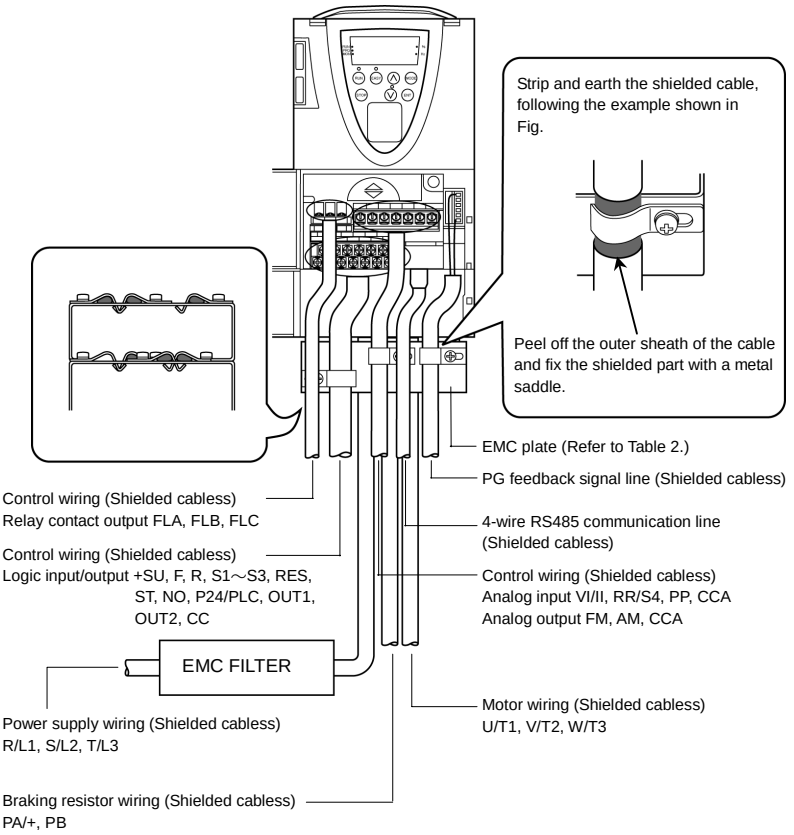

Fig. 2

[Operation with external signals]

When using signals from an external control device to operate the inverter, take the measures shown in Figure 3.

Ex.) When using the potentiometer and forward run/reverse run terminals

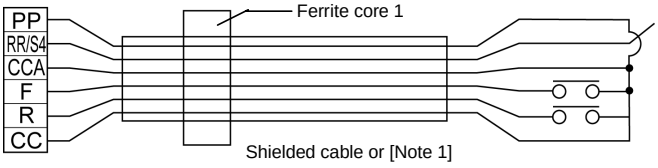

Fig. 3

[Accessories for countermeasure]

□ Recommended shield cable : Showa electric Wire & Cable Co., LTD
Type : CV-S
Rating : 600V or less
Cross-sectional area : 2~1000mm^2

If it is difficult to procure shielded cables, protect cables with conduit tubes.

□ [Note 1] Recommended shield : SUMITOMO 3M Limited, Electromagnetic wave guard shielding sleeve
Type : DS-5, 7, 10, 14

□ EMC filter Type : EMF3 series

□ Recommended ferrite core 1 : TDK Corporation
Type : ZCAT3035-1330

Use the following, as required.

□ Recommended ferrite core : NEC TOKIN Corporation
Type : ESD-R-47D-1

□ Zero-phase reactor : Soshin Electric Co., Ltd.
Type : RC5078 or RC9129

□ High-attenuation radio noise reduction filter : Soshin Electric Co., Ltd.
Type : NF series

9.1.3 Low-voltage directive

The low-voltage directive provides for the safety of machines and systems. All Toshiba inverters are CE-marked in accordance with the standard IEC61800-5-1 specified by the low-voltage directive, and can therefore be installed in machines or systems and imported without a problem to European countries.

Applicable standard: IEC61800-5-1
Adjustable speed electrical power drive system
Pollution level: 2
Overvoltage category: 3

9.1.4 Measures to be taken to satisfy the low-voltage directive

When incorporating the inverter into a machine or system, it is necessary to take the following measures so that the inverter satisfies the low-voltage directive.

(1) Install the inverter in a cabinet and ground the inverter enclosure. When doing maintenance, be extremely careful not to put your fingers into the inverter through a wiring hole and touch a charged part, which may occur depending on the model and capacity of the inverter used.

(2) Do not connect two or more wires to the main circuit earth terminal of the inverter. If necessary, install an additional earth terminal on the EMC plate on which the inverter is installed and connect another cable to it. (Refer to Fig. 4.) See the table of section 10.1.

(3) Install a non-fuse circuit breaker on the input side of the inverter.

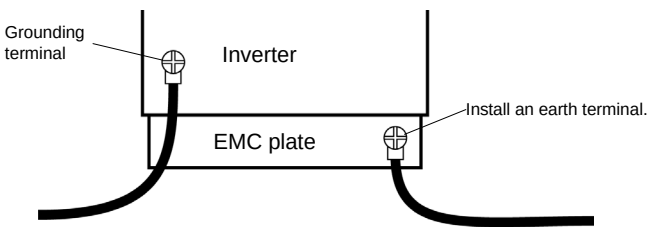

Fig. 4

9.2 Measures to be taken to satisfy the UL/CSA standards

All VF-AS1 series inverters are certified by UL and CSA, and have nameplates with UL and CSA markings.

9.2.1 Caution in installing the inverter

A UL certificate was granted on the assumption that the inverter would be installed in a cabinet. Therefore, install the inverter in a cabinet and if necessary, take measures to maintain the ambient temperature (temperature in the cabinet) within the specified temperature range.

For models designed for 15kW motors or smaller, if the cover on the top of the inverter is removed, the ambient temperature can rise to 50°C in some cases, although the maximum allowable ambient temperature is 40°C. Incidentally, models (with no cover on the top) designed for 18.5 kW motors or larger can be used at ambient temperatures of up to 50°C.

9.2.2 Caution in wiring and rated current

Use the UL conformed cables (Rating 75 °C or more, Use the copper conductors only.) to the main circuit terminals (R/L1, S/L2, T/L3, U/T1, V/T2, W/T3). For FLA, FLB and FLC terminals, the round solderless terminal “V1.25-3” has to be used with UL-certified electric wire.

For instruction in the United States, Integral solid state short circuit protection does not provide branch circuit protection. Branch circuit protection must be provided in accordance with the National Electrical Code and any additional local codes.

For instruction in the Canada, Integral solid state short circuit protection does not provide branch circuit protection. Branch circuit protection must be provided in accordance with the Canadian Electrical Code and any additional local codes.

⇒ For recommended electric wire sizes, see Tables 5.

UL-certified rated output current is not the same as inverter unit rated current. Refer to Table 5.

9.2.3 Caution as to peripheral devices

Use the UL listed fuses at connecting to power supply.

The UL certification test on this inverter was conducted under the AIC* conditions shown in Table 4 (*: current that flows in the event of a short-circuit in the power supply). Note that AIC currents vary depending on the capacity of the motor used.

Table 4 Power supply short-circuit current and maximum input voltage

Input voltage	Drive motor	Power supply short-circuit and maximum input voltage
240V	0.4kW	Suitable For Use On A Circuit Capable Of Delivering Not More Than 5,000A rms Symmetrical Amperes, 240 Volts Maximum When Protected by CC Class Fuses.
	0.75kW to 37kW	Suitable For Use On A Circuit Capable Of Delivering Not More Than 5,000A rms Symmetrical Amperes, 240 Volts Maximum When Protected by J Class Fuses.
	45kW and over	Suitable For Use On A Circuit Capable Of Delivering Not More Than 10,000A rms Symmetrical Amperes, 240 Volts Maximum When Protected by J Class Fuses.
480V	0.75kW to 1.5kW	Suitable For Use On A Circuit Capable Of Delivering Not More Than 5,000A rms Symmetrical Amperes, 480 Volts Maximum When Protected by CC Class Fuses.
	2.2kW to 37kW	Suitable For Use On A Circuit Capable Of Delivering Not More Than 5,000A rms Symmetrical Amperes, 480 Volts Maximum When Protected by J Class Fuses.
	45kW to 132kW	Suitable For Use On A Circuit Capable Of Delivering Not More Than 10,000A rms Symmetrical Amperes, 480 Volts Maximum When Protected by J Class Fuses.
	160kW to 220kW	Suitable For Use On A Circuit Capable Of Delivering Not More Than 18,000A rms Symmetrical Amperes, 480 Volts Maximum When Protected by J Class Fuses.
	280kW	Suitable For Use On A Circuit Capable Of Delivering Not More Than 30,000A rms Symmetrical Amperes, 480 Volts Maximum When Protected by T Class Fuses.
	355kW to 400kW	Suitable For Use On A Circuit Capable Of Delivering Not More Than 30,000A rms Symmetrical Amperes, 480 Volts Maximum When Protected by J Class Fuses.
	500kW	Suitable For Use On A Circuit Capable Of Delivering Not More Than 42,000A rms Symmetrical Amperes, 480 Volts Maximum When Protected by J Class Fuses.

Table 5 AIC, Fuse and Wire sizes

Voltage class	Applicable motor [kW]	Inverter model	UL output current (A) *2, *3	AIC (A) (Interrupting capacity)	Fuse class and current (A)	Input wire sizes of power circuit *4	Output wire sizes of power circuit *4	Earth *4
200V class	0.4	VFAS1-2004PL	2.5 (CF=4)	AIC 5000A	CC 7Amax.	AWG 14	AWG 14	AWG 14
	0.75	VFAS1-2007PL	4.8 (CF=4)	AIC 5000A	J 15Amax.	AWG 14	AWG 14	AWG 14
	1.5	VFAS1-2015PL	7.8 (CF=4)	AIC 5000A	J 25Amax.	AWG 14	AWG 14	AWG 14
	2.2	VFAS1-2022PL	11.0 (CF=4)	AIC 5000A	J 25A max.	AWG 12	AWG 12	AWG 14
	3.7/4.0	VFAS1-2037PL	17.5 (CF=4)	AIC 5000A	J 45Amax.	AWG 10	AWG 10	AWG 12
	5.5	VFAS1-2055PL	25.3 (CF=4)	AIC 5000A	J 60Amax.	AWG 8	AWG 8	AWG 10
	7.5	VFAS1-2075PL	32.2 (CF=4)	AIC 5000A	J 70Amax.	AWG 8	AWG 8	AWG 10
	11	VFAS1-2110PM	48.3 (CF=4)	AIC 5000A	J 90Amax.	AWG 4	AWG 4	AWG 10
	15	VFAS1-2150PM	62.1 (CF=4)	AIC 5000A	J 110Amax.	AWG 4	AWG 4	AWG 10
	18.5	VFAS1-2185PM	74.8 (CF=2.5)	AIC 5000A	J 125Amax.	AWG 3	AWG 3	AWG 8
	22	VFAS1-2220PM	88 (CF=2.5)	AIC 5000A	J 150Amax.	AWG 2	AWG 2	AWG 8
	30	VFAS1-2300PM	114 (CF=2.5)	AIC 5000A	J 200Amax.	AWG 2/0	AWG 2/0	AWG 6
	37	VFAS1-2370PM	143 (CF=2.5)	AIC 5000A	J 225Amax.	AWG 3/0	AWG 3/0	AWG 6
	45	VFAS1-2450PM	169 (CF=2.5)	AIC 10000A	J 300Amax.	AWG 4/0	AWG 4/0	AWG 6
	55	VFAS1-2550P	221 (CF=2.5)	AIC 10000A	J 350Amax.	AWG 3/0 × 2	AWG 3/0 × 2	AWG 2
	75	VFAS1-2750P	285 (CF=2.5)	AIC 10000A	J 450Amax.	AWG 4/0 × 2	250MCM × 2	AWG 2
400V class	0.75	VFAS1-4007PL	2.1 (CF=4)	AIC 5000A	CC 6Amax.	AWG 14	AWG 14	AWG 14
	1.5	VFAS1-4015PL	3.4 (CF=4)	AIC 5000A	CC 12Amax.	AWG 14	AWG 14	AWG 14
	2.2	VFAS1-4022PL	4.8 (CF=4)	AIC 5000A	J 15Amax.	AWG 14	AWG 14	AWG 14
	3.7/4.0	VFAS1-4037PL	7.6 (CF=4)	AIC 5000A	J 25Amax.	AWG 12	AWG 12	AWG 14
	5.5	VFAS1-4055PL	11.0 (CF=4)	AIC 5000A	J 40Amax.	AWG 10	AWG 10	AWG 12
	7.5	VFAS1-4075PL	14. 0 (CF=4)	AIC 5000A	J 40Amax.	AWG 10	AWG 10	AWG 12
	11	VFAS1-4110PL	21.0 (CF=4)	AIC 5000A	J 60Amax.	AWG 8	AWG 8	AWG 10
	15	VFAS1-4150PL	27.0 (CF=4)	AIC 5000A	J 70Amax.	AWG 6	AWG 6	AWG 10
	18.5	VFAS1-4185PL	34.0 (CF=4)	AIC 5000A	J 70Amax.	AWG 6	AWG 6	AWG 10
	22	VFAS1-4220PL	40.0 (CF=4)	AIC 5000A	J 80Amax.	AWG 6	AWG 6	AWG 10
	30	VFAS1-4300PL	52.0 (CF=4)	AIC 5000A	J 90Amax.	AWG 4	AWG 4	AWG 10
	37	VFAS1-4370PL	65.0 (CF=2.5)	AIC 5000A	J 110Amax.	AWG 3	AWG 3	AWG 8
	45	VFAS1-4450PL	77.0 (CF=2.5)	AIC 10000A	J 150Amax.	AWG 1	AWG 1	AWG 8
	55	VFAS1-4550PL	96.0 (CF=2.5)	AIC 10000A	J 175Amax.	AWG 1/0	AWG 1/0	AWG 6
	75	VFAS1-4750PL	124.0 (CF=2.5)	AIC 10000A	J 225Amax.	AWG 3/0	AWG 3/0	AWG 6
	90	VFAS1-4900PC	179.0 (CF=2.5)	AIC 10000A	J 250Amax.	AWG 1/0 × 2 250 MCM × 2 *1	AWG 1/0 × 2 250 MCM × 2 *1	AWG 2 250 MCM *1
	110	VFAS1-4110KPC	215.0 (CF=2.5)	AIC 10000A	J 300Amax.	AWG 3/0 × 2 250 MCM × 2 *1	AWG 3/0 × 2 250 MCM × 2 *1	AWG 2 250 MCM *1
	132	VFAS1-4132KPC	259.0 (CF=2.5)	AIC 10000A	J 350Amax.	AWG 4/0 × 2 250 MCM × 2 *1	AWG 4/0 × 2 250 MCM × 2 *1	AWG 1 250 MCM *1
	160	VFAS1-4160KPC	314.0 (CF=2.5)	AIC 18000A	J 400A max.	300 MCM × 2 350 MCM × 2 *1	300 MCM × 2 350 MCM × 2 *1	AWG 1 250 MCM *1
	200	VFAS1-4200KPC	387.0 (CF=2.5)	AIC 18000A	J 500Amax.	AWG 4/0 × 3 350 MCM × 3 *1	AWG 4/0 × 3 350 MCM × 3 *1	AWG 1/0 250 MCM × 2 *1
	220	VFAS1-4220KPC	427.0 (CF=2.5)	AIC 18000A	J 500Amax.	250 MCM × 3 350 MCM × 3 *1	250 MCM × 3 350 MCM × 3 *1	AWG 2/0 250 MCM × 2 *1
	280	VFAS1-4280KPC	550.0 (CF=2.5)	AIC 18000A	T 700Amax.	350 MCM × 3 350 MCM × 3 *1	350 MCM × 3 350 MCM × 3 *1	AWG 3/0 250 MCM × 2 *1
	355	VFAS1-4355KPC	671.0 (CF=2.5)	AIC 30000A	J 450A × 2 max.	400 MCM × 2 × 2 500 MCM × 2 × 2 *1	400 MCM × 4 500 MCM × 4 *1	AWG 4/0 500 MCM *1
	400	VFAS1-4400KPC	759.0 (CF=2.5)	AIC 30000A	J 500A × 2 max.	500 MCM × 2 × 2 500 MCM × 2 × 2 *1	500 MCM × 4 500 MCM × 4 *1	AWG 4/0 500 MCM *1
	500	VFAS1-4500KPC	941.0 (CF=2.5)	AIC 42000A	J 600A × 2 max.	400 MCM × 3 × 2 500 MCM × 3 × 2 * 1	400 MCM × 5 500 MCM × 5 *1	250 MCM 500 MCM *1

*1: This part shows the wiring size with using the Lug terminal.
The Lug terminals are an option.

*2: UL output current is different from unit rating output current.

*3: The value of the UL rated output current is applicable when the carrier frequency (CF) is less than the value shown in the table.

*4: The cables used must be 75°C copper cables within 40°C ambient temperature.

9.2.4 Caution as to the protection of motors from overload

When using the inverter's thermal protection function to protect the motor from overload, read the instruction manual included with the inverter carefully and set parameters according to the specifications of the motor used.

When using the inverter to control the operation of multiple motors, install an overload relay for each individual motor.

10. Selection of peripheral devices

⚠ Warning

Mandatory	• When using the inverter without the front cover, be sure to place the inverter unit inside a cabinet. If they are used outside the cabinet, it may cause electric shock.
Be Grounded	• Be sure to ground every unit. If not, it may cause electric shock or fire on the occasion of failure, short-circuit or electric leak.

10.1 Selection of wiring materials and devices

Voltage class	Applicable motor [kW]	Inverter model	Wire size									
			Main circuit				DC terminal		Braking resistor/ Braking unit (optional) (*4)		Earth cable	
			Input terminal (R, S, T)		Output terminal (U, V, W)							
			AWG (*7)	mm^2 (*8)	AWG (*7)	mm^2 (*8)	AWG (*7)	mm^2 (*8)	AWG (*7)	mm^2 (*8)	AWG (*7)	mm^2 (*9)
200V class	0.4	VFAS1-2004PL	14	1.5	14	1.5	14	1.5	14	1.5	14	2.5
	0.75	VFAS1-2007PL	14	1.5	14	1.5	14	1.5	14	1.5	14	2.5
	1.5	VFAS1-2015PL	14	1.5	14	1.5	12	1.5	14	1.5	14	2.5
	2.2	VFAS1-2022PL	12	1.5	12	1.5	10	2.5	14	1.5	14	2.5
	3.7/4.0	VFAS1-2037PL	10	4	10	4	8	6	14	1.5	12	4
	5.5	VFAS1-2055PL	8	6	8	6	6	10	14	1.5	10	6
	7.5	VFAS1-2075PL	8	10	8	10	4	16	12	2.5	10	10
	11	VFAS1-2110PM	4	16	4	16	3	16	10	4	10	16
	15	VFAS1-2150PM	4	25	4	25	1	25	8	6	10	16
	18.5	VFAS1-2185PM	3	25	3	25	1/0	35	8	10	8	16
	22	VFAS1-2220PM	2	25	2	25	2/0	35	6	16	8	16
	30	VFAS1-2300PM	2/0	50	2/0	50	4/0	70	4	25	6	25
	37	VFAS1-2370PM	3/0	70	3/0	70	250MCM	95	3	35	6	35
	45	VFAS1-2450PM	4/0	70	4/0	70	300MCM	95	2	50	6	35
	55	VFAS1-2550P	3/0×2	70×2	3/0×2	120	4/0×2	95×2	1/0	50	2	70
	75	VFAS1-2750P	4/0×2	95×2	250MCM×2	70×2	300MCM×2	120×2	1/0	35×2	2	95
400V class	0.75	VFAS1-4007PL	14	1.5	14	1.5	14	1.5	14	1.5	14	2.5
	1.5	VFAS1-4015PL	14	1.5	14	1.5	14	1.5	14	1.5	14	2.5
	2.2	VFAS1-4022PL	14	1.5	14	1.5	14	1.5	14	1.5	14	2.5
	3.7/4.0	VFAS1-4037PL	12	1.5	12	1.5	10	2.5	14	1.5	14	2.5
	5.5	VFAS1-4055PL	10	2.5	10	2.5	8	4	14	1.5	12	2.5
	7.5	VFAS1-4075PL	10	4	10	4	8	6	14	1.5	12	4
	11	VFAS1-4110PL	8	6	8	6	6	10	14	1.5	10	6
	15	VFAS1-4150PL	6	10	6	10	4	16	12	2.5	10	10
	18.5	VFAS1-4185PL	6	10	6	10	4	16	10	2.5	10	10
	22	VFAS1-4220PL	6	10	6	10	4	16	10	4	10	10
	30	VFAS1-4300PL	4	16	4	16	2	25	8	6	10	16
	37	VFAS1-4370PL	3	25	3	25	1	35	8	10	8	16
	45	VFAS1-4450PL	1	35	1	35	2/0	50	6	16	8	16
	55	VFAS1-4550PL	1/0	50	1/0	50	3/0	70	6	16	6	25
	75	VFAS1-4750PL	3/0	70	3/0	70	250MCM	95	3	35	6	35
	90	VFAS1-4900PC	1/0×2	70×2	1/0×2	95	1/0×2	95×2	1/0	35	2	70
	110	VFAS1-4110KPC	3/0×2	95×2	3/0×2	120	2/0×2	120×2	1/0	50	2	95
	132	VFAS1-4132KPC	4/0×2	95×2	4/0×2	150	4/0×2	120×2	4/0	70	1/0	95
	160	VFAS1-4160KPC	300MCM×2	120×2	300MCM×2	95×2	350MCM×2	150×2	4/0	95	1/0	120
	200	VFAS1-4200KPC	4/0×3	150×2	4/0×3	120×2	3/0×3	150×3	300MCM	150	1/0	150
	220	VFAS1-4220KPC	250MCM×3	150×3	250MCM×3	120×2	4/0×3	150×3	300MCM	150	2/0	150
	280	VFAS1-4280KPC	350MCM×3	150×3	350MCM×3	185×2	300MCM×3	150×4	300MCM	150	3/0	120×2
	355	VFAS1-4355KPC	400MCM ×2×2 (*9)	120×2×2 (*9)	400MCM×4	150×3	500MCM×3	185×4	350MCM×2	185×2	4/0	120×2
	400	VFAS1-4400KPC	500MCM ×2×2 (*9)	150×2×2 (*9)	500MCM×4	185×3	500MCM×4	185×4 (*8)	350MCM×2	185×2	4/0	150×2
	500	VFAS1-4500KPC	400MCM ×3×2 (*9)	150×3×2 (*9)	400MCM×5	185×4	500MCM×4	180×4 (*8)	350MCM×2	185×2	250MCM	150×2

(*1): The recommended cable size is that of the cable (e.g. 600V class, HIV cable) with continuous maximum permissible temperature of 75℃. Ambient temperature is 40°C or less and the wiring distance is 30m or less.
(*2): For the control circuit, use shielded wires whose size (cross-section) is 0.75 mm^2 or more.
(*3): For the earth cable, use wires larger than the specified ones in size (cross-section).
(*4): Recommended wire size for an optional braking resistor. Refer to 5.19 for use of external braking resistor.
(*5): This cable size is conformity to UL508C.
(*6): This cable size is conformity to IEC60364-5-52.
(*7): This cable size is conformity to IEC60364-5-54.
(*8): The recommended cable is 600V class HIV cable with permissible temperature of 90°C.
(*9): The number refers to a cable composition. For example, in the case of "120×2×2": 120×2×2
- Number of cables connected in parallel on the terminal board
- Number of cables connected to each terminal board
- Wire size 120mm^2

10

■ Selection of wiring equipment

Voltage class	Applicable motor [kW]	Inverter model	Input current[A]		No-fuse breaker (MCCB)		Magnetic contactor (MC)	
					Without Reactor	With Reactor	Without Reactor	With Reactor
			Without Reactor	With Reactor	Rated current [A]	Rated current [A]	Operationl current [A] AC-1	Operationl current [A] AC-1
200V class	0.4	VFAS1-2004PL	3.5	2.1	5	5	25	25
	0.75	VFAS1-2007PL	6.1	3.2	10	5	25	25
	1.5	VFAS1-2015PL	11.5	6.4	15	10	25	25
	2.2	VFAS1-2022PL	15	9.3	20	15	25	25
	3.7/4.0	VFAS1-2037PL	26.0	15.5	30	30	32	25
	5.5	VFAS1-2055PL	35	22. 5	50	40	40	25
	7.5	VFAS1-2075PL	45	34.5	60	40	50	40
	11	VFAS1-2110PM	-	53.5	-	75	-	80
	15	VFAS1-2150PM	-	72	-	100	-	80
	18.5	VFAS1-2185PM	-	77	-	100	-	80
	22	VFAS1-2220PM	-	88	-	125	-	125
	30	VFAS1-2300PM	-	125	-	150	-	125
	37	VFAS1-2370PM	-	140	-	175	-	250
	45	VFAS1-2450PM	-	165	-	200	-	250
	55	VFAS1-2550P	-	200	-	250	-	275
	75	VFAS1-2750P	-	270	-	350	-	350
400V class	0.75	VFAS1-4007PL	3.7	2.1	5	4	25	25
	1.5	VFAS1-4015PL	5.8	3.8	10	6.3	25	25
	2.2	VFAS1-4022PL	8.2	5.7	14	10	25	25
	3.7/4.0	VFAS1-4037PL	14.0	8.7	18	14	25	25
	5.5	VFAS1-4055PL	20.5	12.7	32	25	25	25
	7.5	VFAS1-4075PL	27	16.3	32	25	32	25
	11	VFAS1-4110PL	36.5	21.5	50	30	40	32
	15	VFAS1-4150PL	48	33.5	60	40	50	40
	18.5	VFAS1-4185PL	-	45.5	-	60	-	50
	22	VFAS1-4220PL	-	50	-	60	-	50
	30	VFAS1-4300PL	-	66	-	100	-	80
	37	VFAS1-4370PL	-	84	-	100	-	125
	45	VFAS1-4450PL	-	105	-	125	-	125
	55	VFAS1-4550PL	-	120	-	150	-	125
	75	VFAS1-4750PL	-	165	-	200	-	250
	90	VFAS1-4900PC	-	170	-	200	-	250
	110	VFAS1-4110KPC	-	200	-	250	-	275
	132	VFAS1-4132KPC	-	240	-	300	-	315
	160	VFAS1-4160KPC	-	290	-	350	-	350
	200	VFAS1-4200KPC	-	360	-	500	-	500
	220	VFAS1-4220KPC	-	395	-	500	-	500
	280	VFAS1-4280KPC	-	495	-	700	-	700
	355	VFAS1-4355KPC	-	637	-	1000	-	1000
	400	VFAS1-4400KPC	-	709	-	1000	-	1000
	500	VFAS1-4500KPC	-	876	-	1200	-	1600

(*1): Selections for use of the Toshiba 4-pole standard motor with power supply voltage of 200V/400V-50Hz.

(*2): Choose the MCCB according to the power supply capacity.
For comply with UL and CSA standard, use the fuse certified by UL and CSA.

(*3): When using on the motor side during commercial-power supply operation, choose the MC with class AC-3 rated current for the motor rated current.

(*4): Attach surge killers to the magnetic contactor and exciting coil of the relay.

(*5): In the case the magnetic contactor (MC) with 2a-type auxiliary contacts is used for the control circuit, raise the reliability of the contact by using 2a-type contacts in parallel connection.

(*6): For 200V/55kW model and larger and 400V/90kW model and larger, be sure to install a DC reactor.

10.2 Installation of a magnetic contactor

If using the inverter without installing a magnetic contactor (MC) in the primary circuit, use an MCCB (with a power cutoff device) to open the primary circuit when the inverter protective circuit is activated.
If using a braking resistor or braking resistor unit, install a magnetic contactor (MC) or no-fuse breaker with a power cutoff device to the power supply of the inverter, so that the power circuit opens when the failure detection relay (FL) in the inverter or the external overload relay is activated.

■ Magnetic contactor in the primary circuit

To detach the inverter from the power supply in any of the following cases, insert a magnetic contactor (primary-side magnetic contactor) between the inverter and the power supply.
(1) If the motor overload relay is tripped
(2) If the protective detector (FL) built into the inverter is activated
(3) In the event of a power failure (for prevention of auto-restart)
(4) If the resistor protective relay is tripped when a braking resistor or braking resistor unit is used
When using the inverter with no magnetic contactor (MC) on the primary side, install a no-fuse breaker with a voltage tripping coil instead of an MC and adjust the no-fuse breaker so that it will be tripped if the protective relay referred to above is activated. To detect a power failure, use an undervoltage relay or the like.

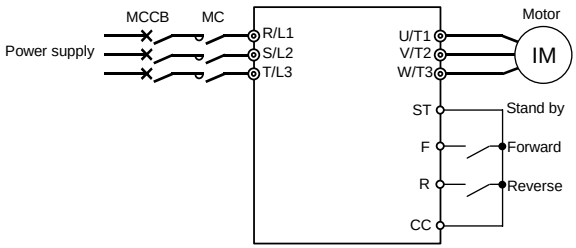

Example of connection of a magnetic contactor in the primary circuit

Note on wiring

- When frequently switching between start and stop, do not use the magnetic contactor on the primary side as an on-off switch for the inverter.
  Instead, stop and start the inverter by using terminals F and CC (forward run) or R and CC (reverse run).
- Be sure to attach a surge killer to the exciting coil of the magnetic contactor (MC).

■ Magnetic contactor in the secondary circuit

A magnetic contactor may be installed on the secondary side to switch controlled motors or supply commercial power to the load when the inverter is out of operation.

Note on wiring

- Be sure to interlock the magnetic contactor on the secondary side with the power supply to prevent commercial power from being applied to the inverter output terminals.
- When installing a magnetic contactor (MC) between the inverter and the motor, avoid turning the magnetic contactor on or off during operation. Turning the magnetic contactor on or off during operation causes a current to rush into the inverter which could lead to malfunction.

10.3 Installation of an overload relay

1) The VF-AS1 inverter has an electronic-thermal overload protective function.
   In the following cases, however, an overload relay suitable for the adjustment of the motor electronic thermal protection level (thr) or appropriate to the motor used should be installed between the inverter and the motor.
   • When using a motor with a current rating different to that of the corresponding Toshiba general-purpose motor
   • When operating a single motor with an output smaller than that of the applicable standard motor.
   When operating multiple motors at a time, be sure to install an overload relay for each individual motor.
2) When using the VF-AS1 inverter to operate a constant-torque motor, such as the Toshiba VF motor, adjust the protection characteristic of the electronic thermal protection unit (OLM) to the VF motor use.
3) It is recommended to use a motor with a thermal relay embedded in the motor coil to give sufficient protection to the motor, especially when it runs in a low-speed range.

10.4 Application and functions of options

Separate type options shown below are prepared for the inverter VF-AS1

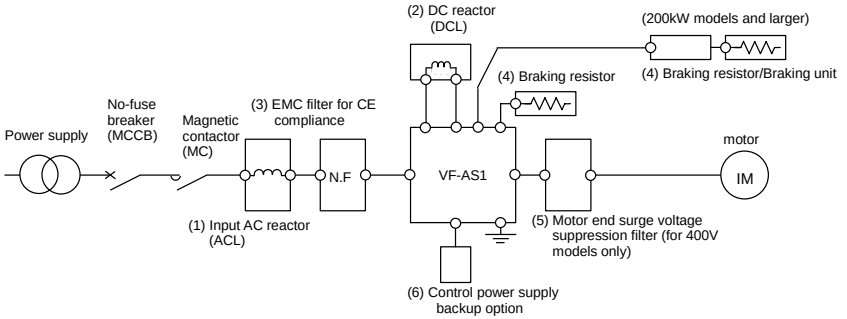

Sorts of separate-type options

No.	Option name	Function, purpose.
(1)	Input AC reactor (ACL)	To be used for improvement of input power-factor of the inverter power source, for reducing higher harmonic or suppressing external surge. The input reactor can be installed when the power capacity is 500 kVA or more and it is 10 times or more as high as the inverter capacity or there are some source distorted wave generation such as a thyristor, etc. and a high capacity inverter connected with the same distribution system.
(2)	DC reactor(DCL)	The DC reactor is superior to the input AC reactor in power-factor improvement. For the inverter system that is required to be high reliable, it is recommended to use the input AC reactor that effectually suppresses external surge together with the DC reactor. 200V/11 to 45kW models and 400V/18.5 to 75kW models come with a built-in DC rector as standard equipment. * If you are using a 200V/55kW model or larger or a 400V/90kW model or larger, be sure to connect a DC reactor. (No DC reactor is required when the inverter is powered from a DC power supply.)
(3)	EMC Directive compliant noise reduction filter (EMF3-*****)	If EMC filter is installed in proper connection, the inverter has consistency with EMC commands. 200V/0.4kW to 200V/7.5kW models and 400V/0.75 to 400V/500kW models come standard with built-in noise filters. The effectiveness of the built-in filter can, however, be increased by adding an EMC filter.
(4)	Braking resistor Braking unit	To be used to shorten deceleration time for the reason of frequently operated quick deceleration and suspension or high inertia load. This increases consumption of regenerative energy in dynamic braking. For 200kW more inverter, it requires the braking unit.
(5)	Motor end surge voltage suppression filter (for 400 V models only)	In a system in which 400 V class general motor is driven by a voltage PWM type inverter using a high-speed switching device (IGBT, etc.), surge voltage depending on cable constant may cause deterioration in insulation of motor winding. Take measures against surge voltage such as use of insulation-reinforced motor, installation of AC reactor, surge voltage suppression filter, sine wave filter and so on in the inverter's output side. Note) Set the carrier frequency to 4.0~8.0kHz when sine wave filter is used.
(6)	Control power supply backup option	The VF-AS1 supplies control power from the main circuit power supply in it. The optional backup unit is designed to supply control power in the event the main circuit power supply shuts down. The optional backup unit can be used with both 200V and 400V models. Unit type: CPS002Z

Type of reactor	Effect			
	Power-factor improvement	Harmonic suppression		External surge suppression
		200V, 3.7/4.0kW or less	Other combination	
Input AC reactor	Effective	Effective	Effective	Effective
DC reactor	Very effective	Effective	Very effective	Not effective

10

No.	Option name	Function, purpose.
(7)	LED Remote Keypad option (with parameter copy function)	Extention operation panel unit with parameter copy function. Includes LED display, RUN/STOP key, UP/DOWN key, MODE key, ENT key, EASY key, and COPY MODE key. (When using this unit, set as follows: F805 (common serial transmission waiting time) = 0.00 (default setting). Use communication cable No. 10 to connect to the inverter. Panel type: RKP002Z Cable type: CAB0011 (1m), CAB0013 (3m), CAB0015 (5m)
(8)	LCD Remote Keypad option	This LCD operation panel unit can be installed to the inverter unit. Includes LCD display, RUN key, STOP/RESET key, job dial, ESC key, FWD/REV key and F1 to F4 key. Special cable is needed to connect the inverter and LCD panel. Panel type: RKP004Z LCD cable type: CAB0071 (1m), CAB0073 (3m), CAB0075 (5m) , CAB00710 (10m)
(9)	USB communication converter unit (for communication with multiple inverters)	More than one inverter can be controlled with a personal computer and so on if this unit is used for connection between inverters and personal computer. • Computer link: Since this unit makes it possible to connect inverters with higher-class computer, FA computer, etc., a data communication network can be constructed among multiple inverters. Unit type: USB001Z
(10)	Communication cable	For RS485/USB communication (between inverter and RS485/USB communication conversion unit) Cable type: CAB0011 (1m), CAB0013 (3m), CAB0015 (5m)
(11)	Operation panel	A frequency meter, frequency setup device, RUN/STOP (forward, reverse) switch are built in this operation panel. (Model: CBVR-7B1)
(12)	heat sink outside protrusion option	This allows is heat generated inside panels to be reduced

Selection table of separate-type options (1/2)

Voltage class	Applicable motor [kW]	Inverter model	EMC filter (*1)	DC reactor (DCL)	Dynamic brake drive circuit (GTR7) (*2)	Control power supply backup
200V class	0.4	VFAS1-2004PL	Built-in	Option	Built-in	Option
	0.75	VFAS1-2007PL	Built-in	Option	Built-in	Option
	1.5	VFAS1-2015PL	Built-in	Option	Built-in	Option
	2.2	VFAS1-2022PL	Built-in	Option	Built-in	Option
	3.7/4.0	VFAS1-2037PL	Built-in	Option	Built-in	Option
	5.5	VFAS1-2055PL	Built-in	Option	Built-in	Option
	7.5	VFAS1-2075PL	Built-in	Option	Built-in	Option
	11	VFAS1-2110PM	Option	Built-in	Built-in	Option
	15	VFAS1-2150PM	Option	Built-in	Built-in	Option
	18.5	VFAS1-2185PM	Option	Built-in	Built-in	Option
	22	VFAS1-2220PM	Option	Built-in	Built-in	Option
	30	VFAS1-2300PM	Option	Built-in	Built-in	Option
	37	VFAS1-2370PM	Option	Built-in	Built-in	Option
	45	VFAS1-2450PM	Option	Built-in	Built-in	Option
	55	VFAS1-2550P	Option	Attached as standard	Built-in	Option
	75	VFAS1-2750P	Option	Attached as standard	Built-in	Option
400V class	0.75	VFAS1-4007PL	Built-in	Option	Built-in	Option
	1.5	VFAS1-4015PL	Built-in	Option	Built-in	Option
	2.2	VFAS1-4022PL	Built-in	Option	Built-in	Option
	3.7/4.0	VFAS1-4037PL	Built-in	Option	Built-in	Option
	5.5	VFAS1-4055PL	Built-in	Option	Built-in	Option
	7.5	VFAS1-4075PL	Built-in	Option	Built-in	Option
	11	VFAS1-4110PL	Built-in	Option	Built-in	Option
	15	VFAS1-4150PL	Built-in	Option	Built-in	Option
	18.5	VFAS1-4185PL	Built-in	Built-in	Built-in	Option
	22	VFAS1-4220PL	Built-in	Built-in	Built-in	Option
	30	VFAS1-4300PL	Built-in	Built-in	Built-in	Option
	37	VFAS1-4370PL	Built-in	Built-in	Built-in	Option
	45	VFAS1-4450PL	Built-in	Built-in	Built-in	Option
	55	VFAS1-4550PL	Built-in	Built-in	Built-in	Option
	75	VFAS1-4750PL	Built-in	Built-in	Built-in	Option
	90	VFAS1-4900PC	Built-in	Attached as standard	Built-in	Option
	110	VFAS1-4110KPC	Built-in	Attached as standard	Built-in	Option
	132	VFAS1-4132KPC	Built-in	Attached as standard	Built-in	Option
	160	VFAS1-4160KPC	Built-in	Attached as standard	Built-in	Option
	200	VFAS1-4200KPC	Built-in	Attached as standard	Option	Option
	220	VFAS1-4220KPC	Built-in	Attached as standard	Option	Option
	280	VFAS1-4280KPC	Built-in	Attached as standard	Option	Option
	355	VFAS1-4355KPC	Built-in	Attached as standard	Option	Option
	400	VFAS1-4400KPC	Built-in	Attached as standard	Option	Option
	500	VFAS1-4500KPC	Built-in	Attached as standard	Option	Option

(*1): For the types and effects of EMC filters, refer to section 9.1.

(*2): An optional braking resistor is required for every model of any capacity (see Selection table of separate-type options (2/2)).

Selection table of separate-type options (2/2)

Voltage class	Appli-cable motor [kW]	Inverter model	Input AC reactor (ACL)	DC reactor (DCL) (*6)	Braking resistor (*1)	Motor end surge voltage suppression filter (*4)	Control power supply backup
200V class	0.4	VFAS1-2004PL	PFL-2005S	DCL-2007	PBR-2007	–	CPS002Z
	0.75	VFAS1-2007PL					
	1.5	VFAS1-2015PL	PFL-2011S	DCL-2022	PBR-2002		
	2.2	VFAS1-2022PL					
	3.7/4.0	VFAS1-2037PL	PFL-2018S	DCL-2037	PBR-2037		
	5.5	VFAS1-2055PL	PFL-2025S	DCL-2055	PBR3-2055		
	7.5	VFAS1-2075PL	PFL-2050S	DCL-2110	PBR3-2075		
	11	VFAS1-2110PM		Built-in	PBR3-2110		
	15	VFAS1-2150PM	PFL-2100S		PBR3-2150		
	18.5	VFAS1-2185PM					
	22	VFAS1-2220PM			PBR3-2220		
	30	VFAS1-2300PM	PFL-2150S				
	37	VFAS1-2370PM			PBR-222W002		
	45	VFAS1-2450PM	PFL-2200S				
	55	VFAS1-2550P	PFL-2300S	Attached as standard			
	75	VFAS1-2750P	PFL-2400S		DGP600W-B1 [DGP600W-C1]		
400V class	0.75	VFAS1-4007PL	PFL-4012S	DCL-2007 (*5)	PBR-2007	MSF-4015Z	
	1.5	VFAS1-4015PL					
	2.2	VFAS1-4022PL		DCL-2022 (*5)		MSF-4037Z	
	3.7/4.0	VFAS1-4037PL			PBR-4037		
	5.5	VFAS1-4055PL	PFL-4025S	DCL-4110	PBR3-4055	MSF-4075Z	
	7.5	VFAS1-4075PL			PBR3-4075		
	11	VFAS1-4110PL			PBR3-4110	MSF-4150Z	
	15	VFAS1-4150PL	PFL-4050S	DCL-4220	PBR3-4150		
	18.5	VFAS1-4185PL		Built-in		MSF-4220Z	
	22	VFAS1-4220PL			PBR3-4220		
	30	VFAS1-4300PL	PFL-4100S			MSF-4370Z	
	37	VFAS1-4370PL			PBR-417W008		
	45	VFAS1-4450PL				MSF-4550Z	
	55	VFAS1-4550PL	PFL-4150S				
	75	VFAS1-4750PL				MSF-4750Z	
	90	VFAS1-4900PC	PFL-4300S	Attached as standard	DGP600W-B2 [DGP600W-C2]	MSL-4215T	
	110	VFAS1-4110KPC				MSL-4314T	
	132	VFAS1-4132KPC	PFL-4400S				
	160	VFAS1-4160KPC				MSL-4481T	
	200	VFAS1-4200KPC	PFL-4600S		PB7-4200K(*2) DGP600W-B3 [DGP600W-C3]		
	220	VFAS1-4220KPC					
	280	VFAS1-4280KPC	PFL-4800S		PB7-4200K(*2) DGP600W-B4 [DGP600W-C4]	MSL-4759T	
	355	VFAS1-4355KPC	PFL-4450S ×2(parallel)		PB7-4400K(*2) DGP600W-B3 ×2(parallel) [DGP600W-C3 ×2(parallel)]		
	400	VFAS1-4400KPC				MSL-41188T	
	500	VFAS1-4500KPC	PFL-4613S ×2(parallel)		PB7-4400K(*2) DGP600W-B4 ×2(parallel) [DGP600W-C4 ×2(parallel)]		

(*1): Model in square brackets is fitted with top cover.
(*2): To use a 400V/200kW inverter or larger in combination with an external braking resistor (DGP600 series), a braking unit (PB7) with a built-in braking resistor drive circuit is also needed.
(*3): The options are selected based on the premise that 600V HIV insulated wires (continuous allowable temperature: 75°C) are used.
(*4): Each MSF-****Z model is composed of a reactor, a resistor and a capacitor, and as a guide, use a cable 300m or less in length to connect the inverter to the motor.
Each MSL-****T model is an output-dedicated surge suppression reactor, and as a guide, use a cable 100m or less in length (or 50m or less for a shielded cable) to connect the inverter to the motor, although allowable cable lengths vary according to the input voltage.)
(*5): These reactors are usable for each of 200V class and 400V class.
(*6): Be sure to connect DC reactor to 200V-55kW or more or 400V-90kW or more inverter. (Not necessary for DC power input.)
When a 200V-55kW or more inverter or 400V-90 to 280kW inverter is replaced with new one, the reactor (model: DCL-****) used with the current inverter can be used as-is with the new inverter. In such cases, therefore, you do not need to purchase any reactors in this table.

10.5 Optional internal devices

Here are the internal devices optionally available. There are two types of optional devices: Add-on type and Plug-in type.

■ Table of optional devices

Option name		Function, purpose	Model	Type of installation
Expansion terminal function	(1) Expansion I/O card1 option (Logic input/output + PTC input)	Used to extend input and output terminals.	ETB003Z	Add-on
	(2) Expansion I/O card2 option (Function of the above optional card 1 + Analogue input/output + Pulse input)		ETB004Z	Add-on
Communication function	(3) CC-Link communication option	Used to connect to a CC-Link network for control.	CCL001Z	Add-on
	(4) DeviceNet communication option	Used to connect to a DeviceNet network for control.	DEV002Z	Add-on
	(5) PROFIBUS-DP communication option	Used to connect to a PROFIBUS-DP network for control.	PDP002Z	Add-on
Other function	(6) PG feedback option (Push-pull 12V)	Used to issue motor pulse train rate commands or used for sensor vector control.	VEC004Z	Plug-in
	(7) PG feedback option (Push-pull 15V)		VEC005Z	Plug-in
	(8) PG feedback option (Push-pull 24V)		VEC006Z	Plug-in
	(9) PG feedback option (RS422-5V)		VEC007Z	Plug-in

■ Functions of Add-on type options

(1) Expansion I/O card1 option (Logic input/output + PTC input)

Function	Description
Multifunction programmable contact input (4 points)	No-voltage contact input (24Vdc-5mA or less) Sink logic input (at a common voltage of 24V) Source logic input ON: Less than 10Vdc ON: 11Vdc or more OFF: 16Vdc or more OFF: Less than 5Vdc
Multifunction programmable open collector output (2 points)	Driving current: Max. 50mA when an external power source is used Max. 20mA when the internal power source is used Driving voltage: 12V (min) to 30V (max)
Multifunction programmable relay contact output	1C contact configuration 250Vac-2A (cosϕ=1), 250Vac-1A (cosϕ=0.4), 30Vdc-1A
External thermal trip input	Resistance between TH+ and TH- Error: Approx. 70Ω or less or approx. 3kΩ or more Recovery from error: Approx. 1.6kΩ
24V power output	24Vdc - 60mA max
-10V power output	-10Vdc -10mA
Contact input common terminal	Common terminals for contact input

(2) Expansion I/O card2 option (Function of optional card 1 + Analogue input/output + Pulse input)

Function	Description
Multifunction programmable contact input (4 points)	No-voltage contact input (24Vdc-5mA or less) Sink logic input (at a common voltage of 24V) Source logic input ON: Less than 10Vdc ON: 11Vdc or more OFF: 16Vdc or more OFF: Less than 5Vdc
Multifunction programmable open collector output (2 points)	Driving current: Max. 50mA when an external power source is used Max. 20mA when the internal power source is used Driving voltage: 12V (min) to 30V (max)
Multifunction programmable relay contact output	1C contact configuration 250Vac-2A (cosϕ=1), 250Vac-1A (cosϕ=0.4), 30Vdc-1A
Differential current input	Current input: 20mA or less Voltage input: Differential voltages 5V or less, -10V or more, +10V or less
Analog input	Current input: 20mA or less Voltage input: 0V to 10V
Monitor output	Voltage output: -10V to 10V, 0V to 10V Current output: 0mA to 20mA
Pulse train input	Input pulse specifications Voltage: Max. 5V Current: Max. 15mA Frequency: Max. 30kHz Duty: 50±10%
External thermal trip input	Resistance between TH+ and TH- Error: Approx. 70Ω or less or approx. 3kΩ or more Recovery from error: Approx. 1.6kΩ
24V power output	24Vdc - 60mA max
-10V power output	-10Vdc -10mA
Contact input common terminal	Common terminals for contact input

■ Functions of Plug-in type options

	PG feedback option (6) (7) (8)	PG feedback option (9)
Model	VEC004Z, VEC005Z, VEC006Z	VEC007Z
Sensor vector control operation	Speed control operation: Zero-speed - 150% torque Speed control range: 1:1000 (1000ppr PG) Torque control operation: Torque control accuracy ±10% Torque control range: -100% to +100%	
PG method	Complementary method, open collector method	Line drive method
PG cable length	Max. 100m (complementary method)	Max. 30m
PG supply power	VEC004Z: 12V-160mA VEC005Z: 15V-150mA VEC006Z: 24V-90mA	5V-160mA
Maximum pulse input frequency	300kHz or less * If a two-phase open collector is used, a study needs to be made to determine the derating factor. For details, refer to the operating manual for the optional device. Pulse duty: 50±10%	
Pulse input voltage	12Vdc to 24Vdc	Line driver (LTC485 or equivalent)
Recommended encoder	Manufacturer: Sumtak Corporation Model: IRS360 series Supply voltage: 10.8 to 26.4V Output method: Complementary output	Manufacturer: Sumtak Corporation Model: IRS320 series Supply voltage: 5V Output method: Line driver method
Wiring of encoder	Cable type: Twisted-pair shielded cable Conductor resistance: Conductor resistance (Ω/m) x cable length (m) x 2 x current consumption (A) < V_D (V) V_D (V): 1.0V (VEC004Z, VEC005Z, VEC006Z), 0.3V (VEC007Z) Applicable cable: 0.2 to 0.75mm^2 * When a power cable 0.2 mm^2 in cross sectional area is used, the encoder cable length should be: Max. 30m (VEC004Z, VEC005Z, VEC006Z) Max. 10m (VEC007Z) Recommended cable: Kuramo Electric KVC-36SB, Furukawa Electric ROVV-SB	

10

■ How to install

Add-on type devices and insertion type devices are installed in different ways. Install them correctly, as shown in the figures below.

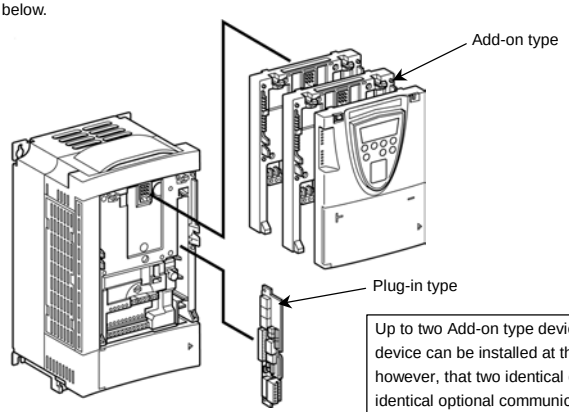

Up to two Add-on type devices and one Plug-in type device can be installed at the same time. Note, however, that two identical optional devices and two identical optional communication devices cannot be connected and used.

Depending on the capacity, the installation of an Add-on type device may increase the depth of the inverter.

200V 0.4~45kW
400V 0.75~37kW

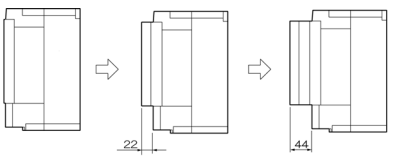

400V 45~75kW

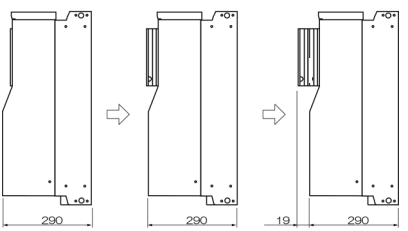

200V 55, 75kW
400V 90~500kW

Note: The inverters of these capacities come equipped with an Add-on type option case as standard. When installing an optional Add-on type device, remove the case.

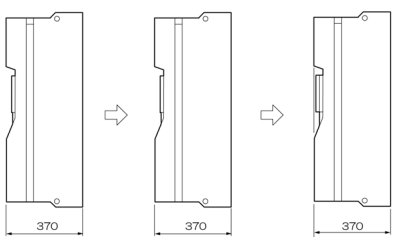

Standard type | Standard type + one Add-on | Standard type + two Add-on

10

10.6 Connection of a DC power supply and other electric units

Besides a three-phase commercial power supply, a single-phase 200V power supply (5.5kW or less) and a DC power supply can be connected to the VFAS1 inverter.
When connecting each of these units, keep in mind the points described in the following sections.

10.6.1 Connection of a single-phase 200V power supply

The table below shows which model to select when operating a three-phase induction motor, using a single-phase 200V power supply (200-240V, 50/60Hz).

Input power	Applicable motor (kW)	Inverter type
Single phase 200~240V 50/60Hz	0.4	VFAS1-2007PL
	0.75	VFAS1-2015PL
	1.5	VFAS1-2022PL
	2.2	VFAS1-2037PL
	3.7	VFAS1-2055PL
	5.5	VFAS1-2075PL

Note: Set the parameter F608 to 0 (input phase failure detection mode selection: disabled).

10.6.2 When using the inverter along with a DC power supply

Keep the following in mind when connecting a DC power supply to the VFAS1 (PA/+ and PC/- terminals).

Note 1: An optional initial charger (MCR-2550) is needed for middle- and large-capacity models.
Note 2: 200V-75kW and 400V-110kW or more models are needed to change the connecting for the cooling fan.
Note 3: A DC reactor does not need to be connected to the inverter.

⇒ For details about use in combination with a DC power supply, refer to the instruction manual (E6581432) specified in section 6.42.

Voltage class	Inverter model	Initial charger (optional)	Change to connection of cooling fan power supply	DC reactor
200V class	VFAS1-2004PL~ VFAS1-2150PM	No required	No required	No required
	VFAS1-2185PM~ VFAS1-2550P	MCR-2550×1	No required	No required
	VFAS1-2750P	MCR-2550×2 (parallel)	Required	No required
400V class	VFAS1-4007PL~ VFAS1-4185PL	No required	No required	No required
	VFAS1-4220PL~ VFAS1-4900PC	MCR-2550×1	No required	No required
	VFAS1-4110KPC	MCR-2550×1	Required	No required
	VFAS1-4132KPC~ VFAS1-4220KPC	MCR-2550×2 (parallel)	Required	No required
	VFAS1-4280KPC	MCR-2550×3 (parallel)	Required	No required
	VFAS1-4355KPC, VFAS1-4400KPC	MCR-2550×4 (parallel)	Required	No required
	VFAS1-4500KPC	MCR-2550×5 (parallel)	Required	No required

Note: Set the parameter F608 to 0 (input phase failure detection mode selection: disabled).

■ **Power consumed by the fans**

VFAS1	Power consumed by the fans
2750P, 4110KPC～4160KPC	700VA
4200KPC～4280KPC	1300 VA
4355KPC, 4400KPC	1900 VA
4500KPC	2500 VA

■**Connecting fans for a separate power supply**

In order to remove the link between the fans and the transformer power supply and relocate it at terminals RO, SO, TO, connectors X1 and X4 must be crossed as indicated on the diagrams below.

VFAS1-2750P, 4110KPC～4160KPC

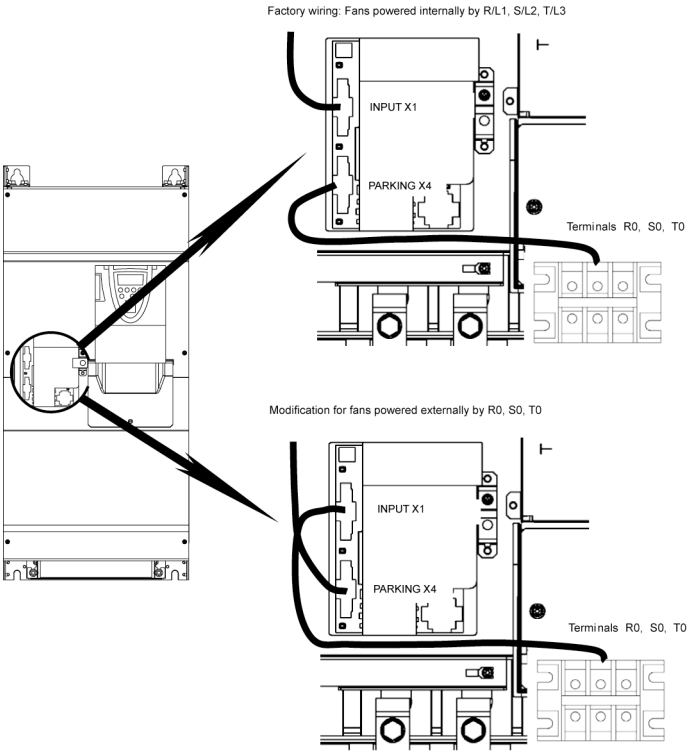

10

VFAS1-4200KPC～4280KPC

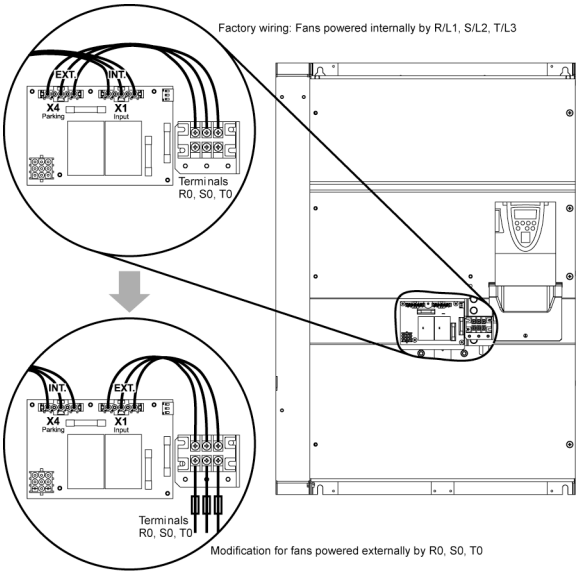

VFAS1-4355KPC, 4400KPC, 4500KPC

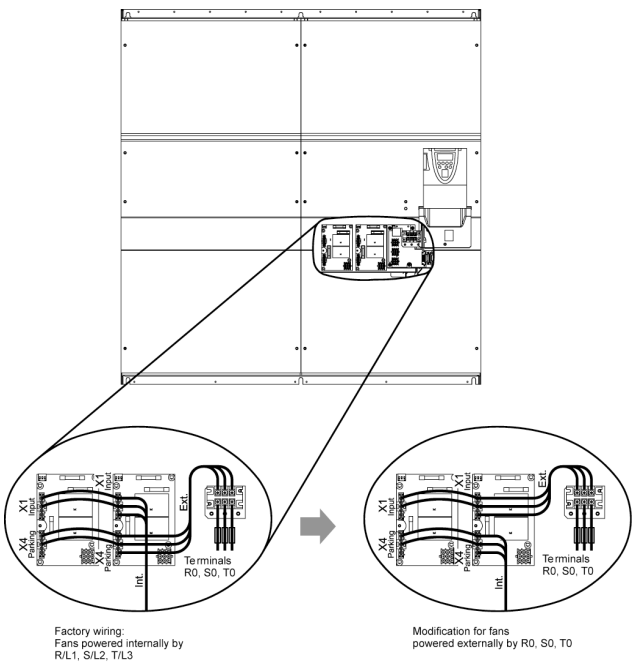

10

11. Table of parameters

1. User parameter

*3 Sensorless vector/vector with sensor (●:Effective, -:Ineffective)

Title	Communication No.	Function	Adjustment range	Minimum setting unit (Panel/Communication)	Default setting	Write during running	Vector control: Speed control	Vector control: Torque control	PM control *2	V/f *1	Reference
FC	-	Operation frequency of operation panel	LL~FH Hz	0.1/0.01	0	Enabled	●/●	●/●	●	●	3. 2

*1: V/f : Any setting of Pt=0, 1, 5 *2: PM control : Pt=6 setting *3: Sensorless vector : Any setting of Pt=2, 3, 4 / Vector with sensor : Any setting of Pt=7, 8

2. Basic parameter [1/4]

Sensorless vector/vector with sensor (●:Effective, -:Ineffective)

Title	Communication No.	Function	Adjustment range	Minimum setting unit (Panel/Communication)	Default setting	Write during running	Vector control: Speed control	Vector control: Torque control	PM control	V/f	Reference
AUH	-	History function		1/1	-	-	●/●	●/●	●	●	5. 1
AU1	0000	Automatic acceleration/deceleration	0:Disabled 1:Automatic setting 2:Automatic setting (during acceleration only)	1/1	0	Disabled	●/●	-	●	●	5. 2
AU2	0001	Automatic torque boost	0:Disabled 1:Automatic torque boost + auto-tuning 1 2:Sensorless vector control 1+ auto-tuning 1	1/1	0	Disabled	●/●	-	●	●	5. 3
AU4	0040	Automatic function setting	0:Disabled 1:Frequency setting by means of voltage 2:Frequency setting by means of current 3:Voltage/current switching from external terminal 4: Frequency setting on operation panel and operation by means of terminals 5: Frequency setting and operation on operation panel	1/1	0	Disabled	●/●	●/●	●	●	5. 4
CMOd	0003	Command mode selection	0:Terminal input enabled 1:Operation panel input enabled (including LED/LCD option input) 2:2-wire RS485 communication input 3:4-wireRS485 communication input 4:Communication option input	1/1	0	Disabled	●/●	●/●	●	●	5. 5
FMOd	0004	Frequency setting mode selection 1	1:VI/II (voltage/current input) 2:RR/S4 (potentiometer/voltage input) 3:RX (voltage input) 4:Operation panel input enabled (including LED/LCD option input) 5:2-wire RS485 communication input 6:4-wire RS485 communication input 7:Communication option input 8:Optional AI1 (differential current input) 9:Optional AI2 (voltage/current input) 10:UP/DOWN frequency 11:Optional RP pulse input 12:Optional high-speed pulse input 13:- (Unsupported option)	1/1	2	Disabled	●/●	-	●	●	5. 5

2. Basic parameter [2/4]

Sensorless vector/vector with sensor (●:Effective, -:Ineffective)

Title	Communication No.	Function	Adjustment range	Minimum setting unit (Panel/Communication)	Default setting	Write during running	Vector control: Speed control	Vector control: Torque control	PM control	V/f	Reference
Pt	0015	V/f control mode selection	0:Constant torque characteristics 1:Voltage decrease curve 2:Automatic torque boost 3:Sensorless vector control 1 (speed) 4:Sensorless vector control 2 (speed/torque) 5:V/f 5-point setting 6:PM control 7:PG feedback control 8:PG feedback vector control	1/1	0	Disabled	-/- -/- ●/- ●/- ●/- -/- -/- -/● -/●	-/- -/- -/- -/- ●/- -/- -/- -/- -/●	- - - - - - ● - -	● ● - - - ● - - -	5. 6
ub	0016	Manual torque boost 1	0.0~30.0%	0.1/0.1	*1	Enabled	-	-	●	●	5. 7
uL	0014	Base frequency 1	25.0~500 Hz	0.1/0.01	*3	Disabled	●/●	●/●	●	●	5. 8
uLu	0409	Base frequency voltage 1	200V class:50~330V 400V class:50~660V	1/0.1	*1	Disabled	●/●	●/●	●	●	5. 8
FH	0011	Maximum frequency	30.0~500.0Hz	0.1/0.01	80.0	Disabled	●/●	●/●	●	●	5. 9
UL	0012	Upper limit frequency	0.0~FH Hz	0.1/0.01	*3	Enabled	●/●	-	●	●	5. 10
LL	0013	Lower limit frequency	0.0~UL Hz	0.1/0.01	0.0	Enabled	●/●	-	●	●	5. 10
ACC	0009	Acceleration time 1	0.1~6000 sec.	0.1/0.1 *2	*1	Enabled	●/●	-	●	●	5. 2
dEC	0010	Deceleration time 1	0.1~6000 sec.	0.1/0.1 *2	*1	Enabled	●/●	-	●	●	5. 2
AuF2	0213	RR/S4 input point 2 frequency	0.0~FH Hz	0.1/0.01	*3	Enabled	●/●	-	●	●	5. 11
A1F2	0204	VI/II input point 2 frequency	0.0~FH Hz	0.1/0.01	*3	Enabled	●/●	-	●	●	5. 11
Sr1	0018	Preset speed operation frequency 1	LL~UL Hz	0.1/0.01	0.0	Enabled	●/●	-	●	●	5. 12
Sr2	0019	Preset speed operation frequency 2	LL~UL Hz	0.1/0.01	0.0	Enabled	●/●	-	●	●	5. 12
Sr3	0020	Preset speed operation frequency 3	LL~UL Hz	0.1/0.01	0.0	Enabled	●/●	-	●	●	5. 12
Sr4	0021	Preset speed operation frequency 4	LL~UL Hz	0.1/0.01	0.0	Enabled	●/●	-	●	●	5. 12
Sr5	0022	Preset speed operation frequency 5	LL~UL Hz	0.1/0.01	0.0	Enabled	●/●	-	●	●	5. 12
Sr6	0023	Preset speed operation frequency 6	LL~UL Hz	0.1/0.01	0.0	Enabled	●/●	-	●	●	5. 12
Sr7	0024	Preset speed operation frequency 7	LL~UL Hz	0.1/0.01	0.0	Enabled	●/●	-	●	●	5. 12
Fr	0008	Forward run/reverse run selection (operation panel operation)	0:Forward run 1:Reverse run 2:Forward run (Forward/reverse switchable on operation panel) 3:Reverse run (Forward/reverse switchable on operation panel)	1/1	0	Enabled	●/●	●/●	●	●	5. 13

*1: Default values vary depending on the capacity. ⇒ See the table of K-46.
*2: Changing the parameter tYP enables to set to 0.01 sec. (adjustment range: 0.01~600.0 sec.).
*3: Inverter with a model number ending with -WN, HN: 60.0 -WP: 50.0

2. Basic parameter [3/4]

Sensorless vector/vector with sensor (●:Effective, -:Ineffective)

Title	Communication No.	Function	Adjustment range	Minimum setting unit (Panel/Communication)	Default setting	Write during running	Vector control: Speed control	Vector control: Torque control	PM control	V/f	Reference
tHr	0600	Motor electronic thermal protection level 1	10~100%	1/1	100	Enabled	●/●	●/●	●	●	5. 14
OLn	0017	Electronic thermal protection characteristic selection	Setting / Motor type / Overload protection / OL stall 0 / Standard Motor / ○ (protect) / × (not stall) 1 / Standard Motor / ○ (protect) / ○ (stall) 2 / Standard Motor / × (not protect) / × (not stall) 3 / Standard Motor / × (not protect) / ○ (stall) 4 / VF Motor / ○ (protect) / × (not stall) 5 / VF Motor / ○ (protect) / ○ (stall) 6 / VF Motor / × (not protect) / × (not stall) 7 / VF Motor / × (not protect) / ○ (stall)	1/1	0	Enabled	●/●	5. 14	●	●	5. 14
dSPU	0701	Current/voltage unit selection	0:%, 1:A (ampere)/V (volt)	1/1	0	Enabled	●/●	●/●	●	●	5. 15
FMSL	0005	FM terminal meter selection	0~76 *1	1/1	0	Enabled	●/●	●/●	●	●	5. 16
FM	0006	FM terminal meter adjustment	-	1/1	*4	Enabled	●/●	●/●	●	●	5. 16
AMSL	0670	AM terminal meter selection	0~76 *1	1/1	2	Enabled	●/●	●/●	●	●	5. 16
AM	0671	AM terminal meter adjustment	-	1/1	*4	Enabled	●/●	●/●	●	●	5. 16
CF	0300	PWM carrier frequency	1.0~16.0kHz (2.5~8.0kHz) *2	0.1/0.1	*3	Enabled	●/●	●/●	●	●	5. 17
UuS	0301	Auto-restart control selection	0:Disabled 1:At auto-restart after momentary stop 2:When turning ST on or off 3:1+2 4:At start-up	1/1	0	Disabled	●/●	●/●	●	●	5. 18.1
UuC	0302	Regenerative power ride-through control	0:Disabled 1:Power ride-through 2:Deceleration stop during power failure 3:Synchronized deceleration/acceleration (synchronized acceleration/deceleration signal) 4:Synchronized deceleration/acceleration (synchronized acceleration/deceleration signal+power failure)	1/1	0	Disabled	●/●	-/-	●	●	5. 18. 2
Pb	0304	Dynamic braking selection	0:Disabled 1:Enabled (braking resistance overload detect) 2:Enabled (braking resistance overload not detect)	1/1	0	Disabled	●/●	●/●	●	●	5. 19
Pbr	0308	Dynamic braking resistance	0.5~1000Ω	0.1/0.1	*3	Disabled	●/●	●/●	●	●	5. 19
PbCP	0309	Allowable continuous braking resistance	0.01~600.0kW	0.01/0.01	*3	Disabled	●/●	●/●	●	●	5. 19

*1: ⇒ For the adjustment range, see the table on page K-39.
*2: For 200V-55/75kW models and 400V-90kW to 400V-500kW models, the carrier frequency is between 2.5 and 8.0kHz inclusive.
*3: Default values vary depending on the capacity. ⇒ See the table of K-46.
*4: Default setting value is adjusted for connection of frequency meters "QS60T". (Between FM and CCA: Approx. 3.6V) (Between AM and CCA: Approx. 3.6V)

2. Basic parameter [4/4]

Sensorless vector/vector with sensor (●:Effective, -:Ineffective)

Title	Communication No.	Function	Adjustment range	Minimum setting unit (Panel/Communication)	Default setting	Write during running	Vector control		PM control	V/f	Reference
							Speed control	Torque control			
tYP	0007	Factory default setting	0: - 1:50 Hz default setting 2:60 Hz default setting 3:Factory default setting 4:Trip clear 5:Cumulative operation time cleared 6:Initialization of type information 7:Save user-defined parameters 8:Reset of user-defined parameters 9:Cumulative fan operation time record clear 10:Acceleration/deceleration time setting 0.01 sec.~600.0 sec. 11:Acceleration/deceleration time setting 0.1 sec.~6000sec.	1/1	0	Disabled	●/●	●/●	●	●	5. 20
PSEL	0050	Registered parameter display selection	0:Standard setting mode at time of activation of motor 1:Quick mode at time of activation of motor 2:Quick mode only	1/1	0	Enabled	●/●	●/●	●	●	5. 22
F1-- ~ F9--	-	Extended parameters	Set detailed parameters shown in the following pages.	-	-	-	●/●	●/●	●	●	-
GrU	-	Automatic edit function	-	-	-		●/●	●/●	●	●	4. 2

3. Extended parameters

[1] Frequency signal

Sensorless vector/vector with sensor (●:Effective, -:Ineffective)

Title	Communication No.	Function	Adjustment range	Minimum setting unit (Panel/Communication)	Default setting	Write during running	Vector control		PM control	V/f	Reference
							Speed control	Torque control			
F100	0100	Low-speed signal output frequency	0.0~UL Hz	0.1/0.01	0.0	Enabled	●/●	●/●	●	●	6. 1. 1
F101	0101	Speed reach setting frequency	0.0~UL Hz	0.1/0.01	0.0	Enabled	●/●	●/●	●	●	6. 1. 2
F102	0102	Speed reach detection band	0.0~UL Hz	0.1/0.01	2.5	Enabled	●/●	●/●	●	●	6. 1. 2

[2] Input signal selection

Sensorless vector/vector with sensor (●:Effective, -:Ineffective)

Title	Communication No.	Function	Adjustment range	Minimum setting unit (Panel/Communication)	Default setting	Write during running	Vector control		PM control	V/f	Reference
							Speed control	Torque control			
F105	0105	Priority when forward/reverse run commands are entered simultaneously	0:Reverse run 1:Stop	1/1	1	Disabled	●/●	●/●	●	●	6. 2. 1
F106	0106	Input terminal priority selection	0:Disabled 1:Enabled	1/1	0	Disabled	●/●	●/●	●	●	6. 2. 2
F107	0107	Unsupported	0: - 1: - 2: - 3: - 4: - 5: - 6: - 7: - 8: -	1/1	0	Disabled	●/●	●/●	●	●	*1
F108	0108	Analog VI/VII voltage/current switching	0:Voltage input 1:Current input	1/1	0	Disabled	●/●	●/●	●	●	6. 2. 3
F109	0109	Analog AI2 (optional circuit board) voltage/current switching	0:Voltage input 1:Current input	1/1	0	Disabled	●/●	●/●	●	●	6. 2. 3

*1: Unsupported option

[3] Terminal function selection

Sensorless vector/vector with sensor (●:Effective, -:Ineffective)

Title	Communication No.	Function	Adjustment range	Minimum setting unit (Panel/Communication)	Default setting	Write during running	Vector control		PM control	V/f	Reference
							Speed control	Torque control			
F110	0110	Always ON function selection 1	0~135 *1	1/1	*3	Disabled	●/●	●/●	●	●	6. 3. 1
F111	0111	Input terminal function selection 1 (F)	0~135 *1	1/1	2	Disabled	●/●	●/●	●	●	7. 2. 1
F112	0112	Input terminal function selection 2 (R)	0~135 *1	1/1	4	Disabled	●/●	●/●	●	●	7. 2. 1
F113	0113	Input terminal function selection 3 (ST)	0~135 *1	1/1	6	Disabled	●/●	●/●	●	●	7. 2. 1
F114	0114	Input terminal function selection 4 (RES)	0~135 *1	1/1	8	Disabled	●/●	●/●	●	●	7. 2. 1
F115	0115	Input terminal function selection 5 (S1)	0~135 *1	1/1	10	Disabled	●/●	●/●	●	●	7. 2. 1
F116	0116	Input terminal function selection 6 (S2)	0~135 *1	1/1	12	Disabled	●/●	●/●	●	●	7. 2. 1
F117	0117	Input terminal function selection 7 (S3)	0~135 *1	1/1	14	Disabled	●/●	●/●	●	●	7. 2. 1
F118	0118	Input terminal function selection 8 (RR/S4)	0~135 *1	1/1	16	Disabled	●/●	●/●	●	●	7. 2. 1
F119	0119	Input terminal function selection 9 (LI1)	0~135 *1	1/1	0	Disabled	●/●	●/●	●	●	7. 2. 1
F120	0120	Input terminal function selection 10 (LI2)	0~135 *1	1/1	0	Disabled	●/●	●/●	●	●	7. 2. 1
F121	0121	Input terminal selection 11 (LI3)	0~135 *1	1/1	0	Disabled	●/●	●/●	●	●	7. 2. 1
F122	0122	Input terminal selection 12 (LI4)	0~135 *1	1/1	0	Disabled	●/●	●/●	●	●	7. 2. 1
F123	0123	Input terminal selection 13 (LI5)	0~135 *1	1/1	0	Disabled	●/●	●/●	●	●	7. 2. 1
F124	0124	Input terminal selection 14 (LI6)	0~135 *1	1/1	0	Disabled	●/●	●/●	●	●	7. 2. 1
F125	0125	Input terminal selection 15 (LI7)	0~135 *1	1/1	0	Disabled	●/●	●/●	●	●	7. 2. 1
F126	0126	Input terminal selection 16 (LI8)	0~135 *1	1/1	0	Disabled	●/●	●/●	●	●	7. 2. 1
F127	0127	Always ON function selection 2	0~135 *1	1/1	0	Disabled	●/●	●/●	●	●	6. 3. 1
F128	0128	Always ON function selection 3	0~135 *1	1/1	0	Disabled	●/●	●/●	●	●	6. 3. 1
F130	0130	Output terminal function selection 1 (OUT1)	0~255 *2	1/1	4	Disabled	●/●	●/●	●	●	7. 2. 2
F131	0131	Output terminal function selection 2 (OUT2)	0~255 *2	1/1	6	Disabled	●/●	●/●	●	●	7. 2. 2
F132	0132	Output terminal function selection 3 (FL)	0~255 *2	1/1	10	Disabled	●/●	●/●	●	●	7. 2. 2
F133	0133	Output terminal function selection 4 (OUT3)	0~255 *2	1/1	254	Disabled	●/●	●/●	●	●	7. 2. 2
F134	0134	Output terminal function selection 5 (OUT4)	0~255 *2	1/1	254	Disabled	●/●	●/●	●	●	7. 2. 2
F135	0135	Output terminal function selection 6 (R1)	0~255 *2	1/1	254	Disabled	●/●	●/●	●	●	7. 2. 2
F136	0136	Output terminal function selection 7 (OUT5)	0~255 *2	1/1	254	Disabled	●/●	●/●	●	●	7. 2. 2
F137	0137	Output terminal function selection 8 (OUT6)	0~255 *2	1/1	254	Disabled	●/●	●/●	●	●	7. 2. 2
F138	0138	Output terminal function selection 9 (R2)	0~255 *2	1/1	254	Disabled	●/●	●/●	●	●	7. 2. 2

*1: ⇒ For the adjustment range, see the table on page K-41. *2: ⇒ For the adjustment range, see the table on page K-43. *3: Inverter with a model number ending with -WN, HN: 0 -WP: 6

[4] Terminal response time setup

Sensorless vector/vector with sensor (●:Effective, -:Ineffective)

Title	Communication No.	Function	Adjustment range	Minimum setting unit (Panel/Communication)	Default setting	Write during running	Vector control		PM control	V/f	Reference
							Speed control	Torque control			
F140	0140	Input terminal 1 response time selection (F)	2~200ms	1/1	8	Disabled	●/●	●/●	●	●	7. 2. 3
F141	0141	Input terminal 2 response time selection (R)	2~200ms	1/1	8	Disabled	●/●	●/●	●	●	7. 2. 3
F142	0142	Input terminal 3 response time selection (ST)	2~200ms	1/1	8	Disabled	●/●	●/●	●	●	7. 2. 3
F143	0143	Input terminal 4 response time selection (RES)	2~200ms	1/1	8	Disabled	●/●	●/●	●	●	7. 2. 3
F144	0144	Input terminal 5~12 response time selection	2~200ms	1/1	8	Disabled	●/●	●/●	●	●	7. 2. 3
F145	0145	Input terminal 13~20 response time selection	5~200ms	1/1	8	Disabled	●/●	●/●	●	●	7. 2. 3
F164	0164	Input terminal selection 17(B12)	0~135 *1	1/1	0	Disabled	●/●	●/●	●	●	7. 2. 1
F165	0165	Input terminal selection 18(B13)	0~135 *1	1/1	0	Disabled	●/●	●/●	●	●	7. 2. 1
F166	0166	Input terminal selection 19(B14)	0~135 *1	1/1	0	Disabled	●/●	●/●	●	●	7. 2. 1
F167	0167	Input terminal selection 20(B15)	0~135 *1	1/1	0	Disabled	●/●	●/●	●	●	7. 2. 1
F168	0168	Output terminal function selection 10 (R3) *5	0~255 *2	1/1	254	Disabled	●/●	●/●	●	●	7. 2. 2
F169	0169	Output terminal function selection 11 (R4) *5	0~255 *2	1/1	254	Disabled	●/●	●/●	●	●	7. 2. 2
F170	0170	Base frequency 2	25.0~500 Hz	0.1/0.01	*4	Disabled	-	-	-	●	6. 4. 1
F171	0171	Base frequency voltage 2	50~330V/660V	1/0.1	*3	Disabled	-	-	-	●	6. 4. 1
F172	0172	Manual torque boost 2	0.0~30.0%	0.1/0.1	*3	Enabled	-	-	-	●	6. 4. 1
F173	0173	Thermal protection level 2	10~100%	1/1	100	Enabled	-	-	-	●	6. 4. 1
F174	0174	Base frequency 3	25.0~500 Hz	0.1/0.01	*4	Disabled	-	-	-	●	6. 4. 1
F175	0175	Base frequency voltage 3	50~330V/660V	1/0.1	*3	Disabled	-	-	-	●	6. 4. 1
F176	0176	Manual torque boost 3	0.0~30.0%	0.1/0.1	*3	Enabled	-	-	-	●	6. 4. 1
F177	0177	Thermal protection level 3	10~100%	1/1	100	Enabled	-	-	-	●	6. 4. 1
F178	0178	Base frequency 4	25.0~500 Hz	0.1/0.01	*4	Disabled	-	-	-	●	6. 4. 1
F179	0179	Base frequency voltage 4	50~330V/660V	1/0.1	*3	Disabled	-	-	-	●	6. 4. 1
F180	0180	Manual torque boost 4	0.0~30.0%	0.1/0.1	*3	Enabled	-	-	-	●	6. 4. 1
F181	0181	Thermal protection level 4	10~100%	1/1	100	Enabled	-	-	-	●	6. 4. 1

*1: ⇒ For the adjustment range, see the table on page K-41.
*2: ⇒ For the adjustment range, see the table on page K-43.
*3: Default values vary depending on the capacity. ⇒ See the table of K-46.
*4: Inverter with a model number ending with -WN, HN: 60.0 -WP: 50.0
*5: Unsupported option

[5] V/f 5-point setting

Sensorless vector/vector with sensor (●:Effective, -:Ineffective)

Title	Communication No.	Function	Adjustment range	Minimum setting unit (Panel/Communication)	Default setting	Write during running	Vector control		PM control	V/f	Reference
							Speed control	Torque control			
F190	0190	V/f 5-point setting VF1 frequency	0.0~FH Hz	0.1/0.01	0.0	Disabled	-	-	-	●	5. 6
F191	0191	V/f 5-point setting VF1 voltage	0.0~100.0%	0.1/0.01	0.0	Disabled	-	-	-	●	5. 6
F192	0192	V/f 5-point setting VF2 frequency	0.0~FH Hz	0.1/0.01	0.0	Disabled	-	-	-	●	5. 6
F193	0193	V/f 5-point setting VF2 voltage	0.0~100.0%	0.1/0.01	0.0	Disabled	-	-	-	●	5. 6
F194	0194	V/f 5-point setting VF3 frequency	0.0~FH Hz	0.1/0.01	0.0	Disabled	-	-	-	●	5. 6
F195	0195	V/f 5-point setting VF3 voltage	0.0~100.0%	0.1/0.01	0.0	Disabled	-	-	-	●	5. 6
F196	0196	V/f 5-point setting VF4 frequency	0.0~FH Hz	0.1/0.01	0.0	Disabled	-	-	-	●	5. 6
F197	0197	V/f 5-point setting VF4 voltage	0.0~100.0%	0.1/0.01	0.0	Disabled	-	-	-	●	5. 6
F198	0198	V/f 5-point setting VF5 frequency	0.0~FH Hz	0.1/0.01	0.0	Disabled	-	-	-	●	5. 6
F199	0199	V/f 5-point setting VF5 voltage	0.0~100.0%	0.1/0.01	0.0	Disabled	-	-	-	●	5. 6

[6] Speed/torque reference gain/bias setup [1/2]

Sensorless vector/vector with sensor (●:Effective, -:Ineffective)

Title	Communication No.	Function	Adjustment range	Minimum setting unit (Panel/Communication)	Default setting	Write during running	Vector control		PM control	V/f	Reference
							Speed control	Torque control			
F200	0200	Frequency priority selection	0:FMOd/F207 terminal switching (input terminal function selection 104, 105) 1:FMOd/F207 frequency switching (switching with F208)	1/1	0	Enabled	●/●	-	●	●	6. 6. 1
F201	0201	VI/II input point 1 setting	0~100%	1/1	0	Enabled	●/●	●/●	●	●	7. 3. 2
F202	0202	VI/II input point 1 frequency	0.0~FH Hz	0.1/0.01	0.0	Enabled	●/●	-	●	●	7. 3. 2
F203	0203	VI/II input point 2 setting	0~100%	1/1	100	Enabled	●/●	●/●	●	●	7. 3. 2
AIF2	0204	VI/II input point 2 frequency	0.0~FH Hz	0.1/0.01	*1	Enabled	●/●	-	●	●	5. 11
F205	0205	VI/II input point 1 rate	0~250% (for torque control etc.)	1/0.01	0	Enabled	●/●	●/●	-	-	*2
F206	0206	VI/II input point 2 rate	0~250% (for torque control etc.)	1/0.01	100	Enabled	●/●	●/●	-	-	*2
F207	0207	Frequency setting mode selection 2	Same as FMOd (1~13)	1/1	1	Disabled	●/●	-	●	●	6. 6. 1
F208	0208	Speed command priority switching frequency	0.1~FH Hz	0.1/0.01	0.1	Enabled	●/●	-	●	●	6. 6. 1
F209	0209	Analog input filter	0:No filter 1:Filter approx. 10ms 2:Filter approx. 15ms 3:Filter approx. 30ms 4:Filter approx. 60ms	1/1	0	Enabled	●/●	●/●	●	●	7. 2. 4
F210	0210	RR/S4 input point 1 setting	0~100%	1/1	0	Enabled	●/●	●/●	●	●	7. 3. 1
F211	0211	RR/S4 input point 1 frequency	0.0~FH Hz	0.1/0.01	0.0	Enabled	●/●	-	●	●	7. 3. 1

This parameter moves to a fundamental parameter.

*1: Inverter with a model number ending with -WN, HN: 60.0 -WP: 50.0

*2: ⇒ For details, refer to Instruction Manual (E6581331) specified in Section 6.42.

[6] Speed/torque reference gain/bias setup [2/2]

Sensorless vector/vector with sensor (●:Effective, -:Ineffective)

Title	Communication No.	Function	Adjustment range	Minimum setting unit (Panel/Communication)	Default setting	Write during running	Vector control		PM control	V/f	Reference
							Speed control	Torque control			
F212	0212	RR/S4 input point 2 setting	0~100%	1/1	100	Enabled	●/●	●/●	●	●	7. 3. 1
AuF2	0213	RR/S4 input point 2 frequency	0.0~FH Hz	0.1/0.01	*4	Enabled	●/●	-	●	●	5. 11
F214	0214	RR/S4 input point 1 rate	0~250% (for torque control etc.)	1/0.01	0	Enabled	●/●	●/●	-	-	*1
F215	0215	RR/S4 input point 2 rate	0~250% (for torque control etc.)	1/0.01	100	Enabled	●/●	●/●	-	-	*1
F216	0216	RX input point 1 setting	-100~100%	1/1	0	Enabled	●/●	●/●	●	●	7. 3. 3
F217	0217	RX input point 1 frequency	0.0~FH Hz	0.1/0.01	0.0	Enabled	●/●	-	●	●	7. 3. 3
F218	0218	RX input point 2 setting	-100~100%	1/1	100	Enabled	●/●	●/●	●	●	7. 3. 3
F219	0219	RX input point 2 frequency	0.0~FH Hz	0.1/0.01	*4	Enabled	●/●	-	●	●	7. 3. 3
F220	0220	RX input point 1 rate	-250~250% (for torque control etc.)	1/0.01	0	Enabled	●/●	●/●	-	-	*1
F221	0221	RX input point 2 rate	-250~250% (for torque control etc.)	1/0.01	100	Enabled	●/●	●/●	-	-	*1
F222	0222	AI1 input point 1 setting	-100~100%	1/1	0	Enabled	●/●	●/●	●	●	*2
F223	0223	AI1 input point 1 frequency	0.0~FH Hz	0.1/0.01	0.0	Enabled	●/●	-	●	●	*2
F224	0224	AI1 input point 2 setting	-100-100%	1/1	100	Enabled	●/●	●/●	●	●	*2
F225	0225	AI1 input point 2 frequency	0.0~FH Hz	0.1/0.01	*4	Enabled	●/●	-	●	●	*2
F226	0226	AI1 input point 1 rate	-250~250% (for torque control etc.)	1/0.01	0	Enabled	●/●	●/●	-	-	*2
F227	0227	AI1 input point 2 rate	-250~250% (for torque control etc.)	1/0.01	100	Enabled	●/●	●/●	-	-	*2
F228	0228	AI2 input point 1 setting	0~100%	1/1	0	Enabled	●/●	●/●	●	●	*2
F229	0229	AI2 input point 1 frequency	0.0~FH Hz	0.1/0.01	0.0	Enabled	●/●	-	●	●	*2
F230	0230	AI2 input point 2 setting	0~100%	1/1	100	Enabled	●/●	●/●	●	●	*2
F231	0231	AI2 input point 2 frequency	0.0~FH Hz	0.1/0.01	*4	Enabled	●/●	-	●	●	*2
F234	0234	RP/high speed pulse input point 1 setting	0~100%	1/1	0	Enabled	●/●	-	●	●	*3
F235	0235	RP/high speed pulse input point 1 frequency	0.0~FH Hz	0.1/0.01	0.0	Enabled	●/●	-	●	●	*3
F236	0236	RP/high speed pulse input point 2 setting	0~100%	1/1	100	Enabled	●/●	-	●	●	*3
F237	0237	RP/high speed pulse input point 2 frequency	0.0~FH Hz	0.1/0.01	*4	Enabled	●/●	-	●	●	*3

This parameter moves to a fundamental parameter.

*1: ⇒ For details, refer to Instruction Manual (E6581331) specified in Section 6.42.
*2: ⇒ For details, refer to Instruction Manual (E6581341) specified in Section 6.42.
*3: ⇒ For details, refer to Instruction Manual (E6581319) specified in Section 6.42.
*4: Inverter with a model number ending with -WN, HN: 60.0 -WP: 50.0

[7] Operation frequency

Sensorless vector/vector with sensor (●:Effective, -:Ineffective)

Title	Communication No.	Function	Adjustment range	Minimum setting unit (Panel/Communication)	Default setting	Write during running	Vector control		PM control	V/f	Reference
							Speed control	Torque control			
F240	0240	Starting frequency setting	0.0~10.0Hz	0.1/0.01	0.1	Enabled	●/●	-	●	●	6. 7. 1
F241	0241	Operation start frequency	0.0~FH Hz	0.1/0.01	0.0	Enabled	●/●	-	●	●	6. 7. 2
F242	0242	Operation start frequency hysteresis	0.0~30.0Hz	0.1/0.01	0.0	Enabled	●/●	-	●	●	6. 7. 2
F243	0243	Stop frequency setting	0.0~30.0Hz	0.1/0.01	0.0	Enabled	●/●	-	●	●	6. 7. 1
F244	0244	Frequency command dead band	0.0~5.0Hz	0.1/0.01	0.0	Enabled	●/●	-	●	●	6. 7. 3

[8] DC braking

Sensorless vector/vector with sensor (●:Effective, -:Ineffective)

Title	Communication No.	Function	Adjustment range	Minimum setting unit (Panel/Communication)	Default setting	Write during running	Vector control		PM control	V/f	Reference
							Speed control	Torque control			
F250	0250	DC braking start frequency	0.0~120.0Hz	0.1/0.01	0.0	Enabled	●/●	-	●	●	6. 8. 1
F251	0251	DC braking current	0~100%	1/1	50	Enabled	●/●	-	●	●	6. 8. 1
F252	0252	DC braking time	0.0~20.0 sec.	0.1/0.1	1.0	Enabled	●/●	-	●	●	6. 8. 1
F253	0253	Forward/reverse DC braking priority control	0:Disabled, 1:Enabled	1/1	0	Enabled	●/●	-	●	●	6. 8. 1
F254	0254	Motor shaft fixing control	0:Disabled, 1:Enabled	1/1	0	Enabled	●/●	-	●	●	6. 8. 2
F255	0255	0Hz command output selection	0:Default (DC braking) 1:0Hz command	1/1	0	Enabled	-/●	-	-	-	6. 8. 3
F256	0256	Time limit for lower-limit frequency operation	0.0:Disabled 0.1~600.0 sec.	0.1/0.1	0.0	Enabled	●/●	●/●	●	●	6. 9

[9] Jogging operation

Sensorless vector/vector with sensor (●:Effective, -:Ineffective)

Title	Communication No.	Function	Adjustment range	Minimum setting unit (Panel/Communication)	Default setting	Write during running	Vector control		PM control	V/f	Reference
							Speed control	Torque control			
F260	0260	Jog run frequency	F240~20.0Hz	0.1/0.01	5.0	Enabled	●/●	-	●	●	6. 10
F261	0261	Jog run stop pattern	0:Deceleration stop 1:Coast stop 2:DC braking stop	1/1	0	Disabled	●/●	-	●	●	6. 10
F262	0262	Operation panel jog run mode	0:Disabled 1:Operation panel jog run mode enabled	1/1	0	Enabled	●/●	-	●	●	6. 10
F264	0264	Input from external contacts - UP response time	0.0~10.0 sec.	0.1/0.1	0.1	Enabled	●/●	-	●	●	6. 11
F265	0265	Input from external contacts - UP frequency step	0.0~FH Hz	0.1/0.01	0.1	Enabled	●/●	-	●	●	6. 11
F266	0266	Input from external contacts - DOWN response time	0.0~10.0 sec.	0.1/0.1	0.1	Enabled	●/●	-	●	●	6. 11
F267	0267	Input from external contacts - DOWN frequency step	0.0~FH Hz	0.1/0.01	0.1	Enabled	●/●	-	●	●	6. 11
F268	0268	Initial UP/DOWN frequency	LL~UL Hz	0.1/0.01	0.0	Enabled	●/●	-	●	●	6. 11
F269	0269	Initial up/down frequency rewriting	0:Not changed 1:Setting of F268 changed when power is turned off	1/1	1	Enabled	●/●	-	●	●	6. 11

[10] Jump frequency

Sensorless vector/vector with sensor (●:Effective, -:Ineffective)

Title	Communication No.	Function	Adjustment range	Minimum setting unit (Panel/Communication)	Default setting	Write during running	Vector control		PM control	V/f	Reference
							Speed control	Torque control			
F270	0270	Jump frequency 1	0.0~FH Hz	0.1/0.01	0.0	Enabled	●/●	-	●	●	6. 12
F271	0271	Jumping width 1	0.0~30.0Hz	0.1/0.01	0.0	Enabled	●/●	-	●	●	6. 12
F272	0272	Jump frequency 2	0.0~FH Hz	0.1/0.01	0.0	Enabled	●/●	-	●	●	6. 12
F273	0273	Jumping width 2	0.0~30.0Hz	0.1/0.01	0.0	Enabled	●/●	-	●	●	6. 12
F274	0274	Jump frequency 3	0.0~FH Hz	0.1/0.01	0.0	Enabled	●/●	-	●	●	6. 12
F275	0275	Jumping width 3	0.0~30.0Hz	0.1/0.01	0.0	Enabled	●/●	-	●	●	6. 12

[11] Preset speed operation frequency (8~15)

Sensorless vector/vector with sensor (●:Effective, -:Ineffective)

Title	Communication No.	Function	Adjustment range	Minimum setting unit (Panel/Communication)	Default setting	Write during running	Vector control		PM control	V/f	Reference
							Speed control	Torque control			
F287	0287	Preset speed operation frequency 8	LL~UL Hz	0.1/0.01	0.0	Enabled	●/●	-	●	●	5. 12
F288	0288	Preset speed operation frequency 9	LL~UL Hz	0.1/0.01	0.0	Enabled	●/●	-	●	●	5. 12
F289	0289	Preset speed operation frequency 10	LL~UL Hz	0.1/0.01	0.0	Enabled	●/●	-	●	●	5. 12
F290	0290	Preset speed operation frequency 11	LL~UL Hz	0.1/0.01	0.0	Enabled	●/●	-	●	●	5. 12
F291	0291	Preset speed operation frequency 12	LL~UL Hz	0.1/0.01	0.0	Enabled	●/●	-	●	●	5. 12
F292	0292	Preset speed operation frequency 13	LL~UL Hz	0.1/0.01	0.0	Enabled	●/●	-	●	●	5. 12
F293	0293	Preset speed operation frequency 14	LL~UL Hz	0.1/0.01	0.0	Enabled	●/●	-	●	●	5. 12
F294	0294	Preset speed operation frequency 15 (Forced operation frequency)	LL~UL Hz	0.1/0.01	0.0	Enabled	●/●	-	●	●	5. 12

[12] Tripless intensification setup [1/2]

Sensorless vector/vector with sensor (●:Effective, -:Ineffective)

Title	Communication No.	Function	Adjustment range	Minimum setting unit (Panel/Communication)	Default setting	Write during running	Vector control		PM control	V/f	Reference
							Speed control	Torque control			
CF	0300	PWM carrier frequency	1.0~16.0kHz (2.5~8.0kHz) *1	0.1/0.1	*2	Enabled	●/●	●/●	●	●	5. 17
UvS	0301	Auto-restart control selection	0:Disabled, 1:At auto-restart 2:ST ON/OFF switching, 3:1+2, 4:Starting	1/1	0	Disabled	●/●	●/●	●	●	5. 18.1
UvC	0302	Regenerative power ride-through control	0:Disabled, 1:Power ride-through 2:Deceleration stop during power failure 3:Synchronized deceleration/acceleration (synchronized acceleration/deceleration signal) 4:Synchronized deceleration/acceleration (synchronized acceleration/deceleration signal+power failure)	1/1	0	Disabled	●/●	-/-	●	●	5. 18. 2
F303	0303	Retry selection	0:Deselect, 1-10 times	1/1	0	Enabled	●/●	●/●	●	●	6. 14. 1
Pb	0304	Dynamic braking selection	0:Disabled 1:Enabled (braking resistance overload detect) 2:Enabled (braking resistance overload not detect)	1/1	0	Disabled	●/●	●/●	●	●	5. 19
F305	0305	Overvoltage limit operation	0:Enabled 1:Disabled 2:Enabled (quick deceleration) 3:Enabled (dynamic quick deceleration)	1/1	2	Disabled	●/●	●/●	●	●	6. 14. 2

This parameter moves to a fundamental parameter. *1: For 200V-55/75kW models and 400V-90kW to 400V-500kW models, the carrier frequency is between 2.5 and 8.0kHz inclusive.

*2: Default values vary depending on the capacity. ⇒ See the table of K-46.

[12] Tripless intensification setup [2/2]

Sensorless vector/vector with sensor (●:Effective, -:Ineffective)

Title	Communication No.	Function	Adjustment range	Minimum setting unit (Panel/Communication)	Default setting	Write during running	Vector control: Speed control	Vector control: Torque control	PM control	V/f	Reference
F307	0307	Base frequency voltage selection (correction of supply voltage)	0:Without voltage compensation (limitless output voltage) 1:With voltage compensation (limitless output voltage) 2:Without voltage compensation (limited output voltage) 3:With voltage compensation (limited output voltage)	1/1	0	Disabled	Parameter is changeable, but fixed to "with voltage compensation" internally. When F307 is set to 0 or 1, fixed at 1 internally. When F307 is set to 2 or 3, fixed at 3 internally.			●	6. 14. 3
Pbr	0308	Dynamic braking resistance	0.5~1000Ω	0.1/0.1	*1	Disabled	●/●	●/●	●	●	5. 19
PbCP	0309	Allowable continuous braking resistance	0.01~600.0kW	0.01/0.01	*1	Disabled	●/●	●/●	●	●	5. 19
F310	0310	Non-stop control time/deceleration time during power failure	0.1~320.0 sec.	0.1/0.1	2.0	Enabled *3/ Disabled	●/●	-/-	●	●	5. 18. 2
F311	0311	Reverse-run prohibition selection	0:Permit all, 1:Prohibit reverse run 2:Prohibit forward run	1/1	0	Disabled	●/●	●/●	●	●	6. 14. 4
F312	0312	Random mode	0:Disabled, 1:Enabled	1/1	0	Disabled	●/●	●/●	●	●	5. 17
F313	0313	Output voltage waveform selection *4	0:PWM carrier frequency control 1 1:PWM carrier frequency control 2	1/1	0	Disabled	●/●	●/●	●	●	6. 14. 5
F316	0316	Carrier frequency control mode selection	0:Not decrease carrier frequency automatically 1:Decrease carrier frequency automatically 2:Not decrease carrier frequency automatically, 400V class supported 3:Decrease carrier frequency automatically, 400V class supported 4:Not decrease carrier frequency automatically, with sinusoidal filter 5:Decrease carrier frequency automatically, with sinusoidal filter	1/1	1	Disabled	●/●	●/●	●	●	5. 17
F317	0317	Synchronized deceleration time (time elapsed between start of deceleration to stop)	0.1~6000 sec.	0.1/0.1 *2	2.0	Enabled	●/●	-/-	●	●	5. 18. 2
F318	0318	Synchronized acceleration time (time elapsed between start of acceleration to achievement of specified speed)	0.1~6000 sec.	0.1/0.1 *2	2.0	Enabled	●/●	-/-	●	●	5. 18. 2
F319	0319	Regenerative over-excitation upper limit	100~160%	1/1	140	Disabled	●/●	●/●	-	●	6. 14. 2

This parameter moves to a fundamental parameter. *1: Default values vary depending on the capacity. ⇒ See the table of K-46.

*2: Changing the parameter tYP enables to set to 0.01 sec. (adjustment range: 0.01~600.0 sec.).

*3: Although the setting can be written into memory if UuC is set to 1 (power ride-through control), it cannot be written if UuC is set to 2 (deceleration stop during a power failure).

*4: F313 is available for VFAS1-2550P, VFAS1-4900PC and above.

[13] Drooping control

Sensorless vector/vector with sensor (●:Effective, -:Ineffective)

Title	Communication No.	Function	Adjustment range	Minimum setting unit (Panel/Communication)	Default setting	Write during running	Vector control: Speed control	Vector control: Torque control	PM control	V/f	Reference
F320	0320	Drooping gain	0.0~100.0% (Enabled if Pt =3, 4, 7 or 8)	0.1/0.1	0.0	Enabled *1	●/●	-	-	-	6. 15
F321	0321	Speed at drooping gain 0%	0.0~320.0Hz (Enabled if Pt =3, 4, 7 or 8)	0.1/0.01	0.0	Enabled	●/●	-	-	-	6. 15
F322	0322	Speed at drooping gain F320	0.0~320.0Hz (Enabled if Pt =3, 4, 7 or 8)	0.1/0.01	0.0	Enabled	●/●	-	-	-	6. 15
F323	0323	Drooping insensitive torque	0~100% (Enabled if Pt =3, 4, 7 or 8)	1/1	10	Enabled	●/●	-	-	-	6. 15

*1: Drooping gain can be changed within a range of 0.1 to 100.0% during operation. When changing the setting to 0.0 (no drooping) or 0.0, stop operation.

[14] Functions for lift [1/2]

Sensorless vector/vector with sensor (●:Effective, -:Ineffective)

Title	Communication No.	Function	Adjustment range	Minimum setting unit (Panel/Communication)	Default setting	Write during running	Vector control: Speed control	Vector control: Torque control	PM control	V/f	Reference
F324	0324	Drooping output filter	0.1~200.0 rad/s (Enabled if Pt=3, 4, 7 or 8)	0.1/0.1	100.0	Enabled	●/●	-	-	-	6. 15
F328	0328	Light-load high-speed operation selection	0:Disabled 1:High-speed operation speed set automatically (Power running at F command: Increase) 2:High-speed operation speed set automatically (Power running at R command: Increase) 3:High-speed operation speed set with F330 (Power running at F command: Increase) 4:High-speed operation speed set with F330 (Power running at R command: Increase)	1/1	0	Disabled	●/●	-	●	●	*1
F329	0329	Light-load high-speed learning function	0:No learning, 1:Forward run learning 2:Reverse run learning	1/1	0	Disabled	●/●	-	-	-	*1
F330	0330	Automatic light-load high-speed operation frequency	30.0~UL Hz	0.1/0.01	*2	Enabled	●/●	-	●	●	*1
F331	0331	Light-load high-speed operation switching lower limit frequency	5.0~UL Hz	0.1/0.01	40.0	Enabled	●/●	-	●	●	*1
F332	0332	Light-load high-speed operation load waiting time	0.0~10.0 sec.	0.1/0.1	0.5	Enabled	●/●	-	●	●	*1
F333	0333	Light-load high-speed operation load detection time	0.0~10.0 sec.	0.1/0.1	1.0	Enabled	●/●	-	●	●	*1
F334	0334	Light-load high-speed operation heavy load detection time	0.0~10.0 sec.	0.1/0.1	0.5	Enabled	●/●	-	●	●	*1
F335	0335	Switching load torque during power running	-250~250%	1/0.01	50	Enabled	●/●	-	●	●	*1
F336	0336	Heavy-load torque during power running	-250~250%	1/0.01	100	Enabled	●/●	-	●	●	*1
F337	0337	Heavy-load torque during constant power running	-250~250%	1/0.01	50	Enabled	●/●	-	●	●	*1
F338	0338	Switching load torque during regenerative braking	-250~250%	1/0.01	50	Enabled	●/●	-	●	●	*1
F340	0340	Creeping time 1	0.00~2.50 sec.	0.01/0.01	0	Enabled	●/●	-	-	-	6. 17
F341	0341	Braking mode selection	0:Disabled, 1:Forward winding up 2:Reverse winding up, 3:Horizontal operation	1/1	0	Disabled	●/●	-	-	-	6. 17
F342	0342	Load portion torque input selection	0:Disabled, 1:VI/II (voltage/current input) 2:RR/S4 (potentiometer/voltage input) 3:RX (voltage input) 4:F343 enabled 5:2-wire RS485 communication input 6:4-wire RS485 communication input 7:Communications option input enabled 8:Optional AI1 (differential current input)	1/1	4	Enabled	●/●	-	-	-	6. 17
F343	0343	Hoisting torque bias input (valid only when F342=4)	-250~250%	1/0.01	100	Enabled	●/●	-	-	-	6. 17
F344	0344	Lowering torque bias multiplier	0~100%	1/0.01	100	Enabled	●/●	-	-	-	6. 17
F345	0345	Brake release time	0.00~2.50 sec.	0.01/0.01	0.05	Enabled	●/●	-	-	-	6. 17
F346	0346	Creeping frequency	F240~20.0 Hz	0.1/0.01	3.0	Disabled	●/●	-	-	-	6. 17
F347	0347	Creeping time 2	0.00~2.50 sec.	0.01/0.01	0.10	Enabled	●/●	-	-	-	6. 17

*1: ⇒ For details, refer to Instruction Manual (E6581327) specified in Section 6.42. *2: Inverter with a model number ending with -WN, HN: 60.0 -WP: 50.0

[14] Functions for lift [2/2]

Sensorless vector/vector with sensor (●:Effective, -:Ineffective)

Title	Communication No.	Function	Adjustment range	Minimum setting unit (Panel/Communication)	Default setting	Write during running	Vector control		PM control	V/f	Reference
							Speed control	Torque control			
F348	0348	Braking time learning function	0:Disabled 1:Brake signal learning (0 after adjustment)	1/1	0	Enabled	●/●	-	-	-	6. 17
F349	0349	Acceleration/deceleration suspend function	0:Disabled, 1:Parameter setting, 2:Terminal input	1/1	0	Disabled	●/●	-	●	●	6. 18
F350	0350	Acceleration suspend frequency	0.0~FH Hz	0.1/0.01	0.0	Enabled	●/●	-	●	●	6. 18
F351	0351	Acceleration suspend time	0.0~10.0 sec.	0.1/0.1	0.0	Enabled	●/●	-	●	●	6. 18
F352	0352	Deceleration suspend frequency	0.0~FH Hz	0.1/0.01	0.0	Enabled	●/●	-	●	●	6. 18
F353	0353	Deceleration suspend time	0.0~10.0 sec.	0.1/0.1	0.0	Enabled	●/●	-	●	●	6. 18

[15] Commercial/inverter switching function

Sensorless vector/vector with sensor (●:Effective, -:Ineffective)

Title	Communication No.	Function	Adjustment range	Minimum setting unit (Panel/Communication)	Default setting	Write during running	Vector control		PM control	V/f	Reference
							Speed control	Torque control			
F354	0354	Commercial power/inverter switching output selection	0:Disabled 1:Automatic switching in the event of a trip 2:Commercial power switching frequency setting 3:Commercial power switching frequency setting + automatic switching in the event of a trip	1/1	0	Disabled	●/●	●/●	●	●	6. 19
F355	0355	Commercial power/inverter switching frequency	0~UL Hz	0.1/0.01	*2	Enabled	●/●	●/●	●	●	6. 19
F356	0356	Inverter-side switching waiting time	0.10~10.00 sec.	0.01/0.01	*1	Enabled	●/●	●/●	●	●	6. 19
F357	0357	Commercial power-side switching waiting time	0.40~10.00 sec.	0.01/0.01	0.62	Enabled	●/●	●/●	●	●	6. 19
F358	0358	Commercial power switching frequency holding time	0.10~10.00 sec.	0.01/0.01	2.00	Enabled	●/●	●/●	●	●	6. 19

*1: Default values vary depending on the capacity. ⇒ See the table of K-46. *2: Inverter with a model number ending with -WN, HN: 60.0 -WP: 50.0

[16] PID control [1/2]

Sensorless vector/vector with sensor (●:Effective, -:Ineffective)

Title	Communication No.	Function	Adjustment range	Minimum setting unit (Panel/Communication)	Default setting	Write during running	Vector control		PM control	V/f	Reference
							Speed control	Torque control			
F359	0359	PID control switching	0:No PID control 1:Process type PID control (temp./pressure, etc.) operation 2:Speed type PID control (potentiometer, etc.) operation 3:Stop retaining P control 4.Dancer control	1/1	0	Disabled	●/●	-	●	●	*1, *2

*1: ⇒ For details, refer to Instruction Manual (E6581319) specified in Section 6.42. *2: ⇒ For details, refer to Instruction Manual (E6581329) specified in Section 6.42.

[16] PID control [2/2]

Sensorless vector/vector with sensor (●:Effective, -:Ineffective)

Title	Communication No.	Function	Adjustment range	Minimum setting unit (Panel/Communication)	Default setting	Write during running	Vector control		PM control	V/f	Reference
							Speed control	Torque control			
F360	0360	PID control feedback control signal selection	0:Deviation input (no feedback input) 1:VI/II (voltage/current input) 2:RR/S4 (potentiometer/voltage input) 3:RX (voltage input) 4:Optional AI1 (differential current input) 5:Optional AI2 (voltage/current input) 6: PG feedback option	1/1	0	Disabled	●/●	-	●	●	*1, *2
F361	0361	Delay filter	0.0~25.0	1/1	0.1	Enabled	●/●	-	●	●	*2
F362	0362	Proportional (P) gain	0.01~100.0	0.01/0.01	0.10	Enabled	●/●	-	●	●	*1, *2
F363	0363	Integral (I) gain	0.01~100.0	0.01/0.01	0.10	Enabled	●/●	-	●	●	*2
F364	0364	PID deviation upper limit	LL~UL Hz	0.1/0.01	60.0	Enabled	●/●	-	●	●	*2
F365	0365	PID deviation lower limit	LL~UL Hz	0.1/0.01	60.0	Enabled	●/●	-	●	●	*2
F366	0366	Differential (D) gain	0.00~2.55	0.01/0.01	0.00	Enabled	●/●	-	●	●	*2
F367	0367	Process upper limit	LL~UL Hz	0.1/0.01	60.0	Enabled	●/●	-	●	●	*2
F368	0368	Process lower limit	LL~UL Hz	0.1/0.01	0.0	Enabled	●/●	-	●	●	*2
F369	0369	PID control waiting time	0~2400 sec.	1/1	0	Enabled	●/●	-	●	●	*2
F370	0370	PID output upper limit	LL~UL Hz	0.1/0.01	60.0	Enabled	●/●	-	●	●	*2
F371	0371	PID output lower limit	LL~UL Hz	0.1/0.01	0.0	Enabled	●/●	-	●	●	*2
F372	0372	Process increasing rate (speed type PID control)	0.1~600.0	0.1/0.1	10.0	Enabled	●/●	-	●	●	*2
F373	0373	Process decreasing rate (speed type PID control)	0.1~600.0	0.1/0.1	10.0	Enabled	●/●	-	●	●	*2

*1: ⇒ For details, refer to Instruction Manual (E6581319) specified in Section 6.42. *2: ⇒ For details, refer to Instruction Manual (E6581329) specified in Section 6.42.

[17] Speed feedback/positioning control

Sensorless vector/vector with sensor (●:Effective, -:Ineffective)

Title	Communication No.	Function	Adjustment range	Minimum setting unit (Panel/Communication)	Default setting	Write during running	Vector control		PM control	V/f	Reference
							Speed control	Torque control			
F375	0375	Number of PG input pulses	12~9999	1/1	500	Disabled	-/●	-/●	-	-	*1
F376	0376	Selection of number of PG input phases	1:Single-phase input 2:Two-phase input 3:Two-phase input (Inversion of polarity)	1/1	2	Disabled	-/●	-/●	-	-	*1
F377	0377	PG disconnection detection	0:Disabled 1:Enabled (with filter) 2:Enabled (Detection of momentary power failure)	1/1	0	Disabled	-/●	-/●	-	-	*1
F378	0378	Number of RP terminal input pulses	12~9999	1/1	500	Disabled	●/●	●/●	●	●	*2
F379	0379	PID output dead band	0~100%	1/1	0	Enabled	●/●	●/●	●	●	*3
F381	0381	Simple positioning completion range	1~4000	1/1	100	Enabled	-/●	-	-	-	*1

*1: ⇒ For details, refer to Instruction Manual (E6581319) specified in Section 6.42.
*2: ⇒ For details, refer to Instruction Manual (E6581341) specified in Section 6.42.
*3: ⇒ For details, refer to Instruction Manual (E6581329) specified in Section 6.42.

[18] Motor constant

Sensorless vector/vector with sensor (●:Effective, -:Ineffective)

Title	Communication No.	Function	Adjustment range	Minimum setting unit (Panel/Communication)	Default setting	Write during running	Vector control		PM control	V/f Constant	Reference
							Speed control	Torque control			
F400	0400	Auto-tuning 1	0:No auto-tuning 1:Initialize motor constant (0 after execution) 2:Continue operation continued after auto-tuning (0 after execution) 3:Auto-tuning by input terminal signal 4:Motor constant auto calculation (0 after execution)	1/1	0	Disabled	●/●	●/●	-	-	6. 22
F401	0401	Slip frequency gain	0~150%	1/1	70	Enabled	●/-	-	-	-	6. 22
F402	0402	Auto-tuning 2	0:Disabled 1:Self-cooled motor 2:Forced air-cooled motor	1/1	0	Disabled	●/●	●/●	-	-	6. 22
F405	0405	Motor rated capacity (motor name plate)	0.10~630.0kW	0.01/0.01	*1	Disabled	●/●	●/●	-	-	6. 22
F406	0406	Motor rated current (motor name plate)	0.1~2000A	0.1/0.1	*1	Disabled	●/●	●/●	-	-	6. 22
F407	0407	Motor rated rotational speed (motor name plate)	100~60000min-1 *2	1/1	*1	Disabled	●/●	●/●	-	-	6. 22
F410	0410	Motor constant 1 (torque boost)	0.0~30.0%	0.1/0.1	*1	Enabled	●/●	●/●	-	-	6. 22
F411	0411	Motor constant 2 (no load current)	10~90%	1/1	*1	Disabled	●/●	●/●	-	-	6. 22
F412	0412	Motor constant 3 (leak inductance)	0~200(×0.1%)	1/1	*1	Disabled	●/●	●/●	-	-	6. 22
F413	0413	Motor constant 4 (rated slip)	0.1~25.0%	0.1/0.1	*1	Disabled	●/●	●/●	-	-	6. 22
F415	0415	Exciting strengthening coefficient	100~130%	1/1	100	Disabled	●/●	●/●	-	-	6. 23
F416	0416	Stall prevention factor	10~250	1/1	100	Disabled	●/●	●/●	-	-	6. 23

*1: Default values vary depending on the capacity. ⇒ See the table of K-46.
*2: If the speed of rotation is set at 10,000min^{-1} or more, the error messages 1000 and E1 (if the speed of rotation is set at 10,000min^{-1}) are displayed alternately.

[19] Torque control [1/2]

Sensorless vector/vector with sensor (●:Effective, -:Ineffective)

Title	Communication No.	Function	Adjustment range	Minimum setting unit (Panel/Communication)	Default setting	Write during running	Vector control		PM control	V/f Constant	Reference
							Speed control	Torque control			
F420	0420	Torque command selection	1:VI/II (voltage/current input) 2:RR/S4 (potentiometer/voltage input) 3:RX (voltage input) 4:Operation panel input enabled (including LED/LCD option input) 5:2-wire RS485 communication input 6:4-wire RS485 communication input 7:Communications option input enabled 8:Optional AI1 (differential current input)	1/1	3	Enabled	-	●/●	-	-	*1
F421	0421	Torque reference filter	0~1000ms	1/1	0	Enabled	-	●/●	-	-	*1
F423	0423	Tension torque bias input selection (torque control)	0:Disabled, 1~8 (same as F420)	1/1	0	Enabled	-	●/●	-	-	6. 24. 3

*1: ⇒ For details, refer to Instruction Manual (E6581331) specified in Section 6.42.

[19] Torque control [2/2]

Sensorless vector/vector with sensor (●:Effective, -:Ineffective)

Title	Communication No.	Function	Adjustment range	Minimum setting unit (Panel/Communication)	Default setting	Write during running	Vector control		PM control	V/f Constant	Reference
							Speed control	Torque control			
F424	0424	Load sharing gain input selection	0:Disabled, 1~8 (same as F420)	1/1	0	Enabled	-	●/●	-	-	6. 24. 3
F425	0425	Forward speed limit input selection	0:Disabled 1:VI/II (voltage/current input) 2:RR/S4 (potentiometer/voltage input) 3:RX (voltage input) 4:F426 enabled	1/1	0	Enabled	-	●/●	-	-	*1
F426	0426	Forward speed limit input level	0.0~UL Hz	0.1/0.01	*2	Enabled	-	●/●	-	-	*1
F427	0427	Reverse speed limit input selection	0:Disabled 1:VI/II (voltage/current input) 2:RR/S4 (potentiometer/voltage input) 3:RX (voltage input) 4:F428 enabled	1/1	0	Enabled	-	●/●	-	-	*1
F428	0428	Reverse speed limit input level	0.0~UL Hz	0.1/0.01	*2	Enabled	-	●/●	-	-	*1
F430	0430	Speed limit (torque = 0) center value reference selection	0:Disabled 1:VI/II (voltage/current input) 2:RR/S4 (potentiometer/voltage input) 3:RX (voltage input) 4:F431 enabled	1/1	0	Enabled	-	●/●	-	-	*1
F431	0431	Speed limit (torque = 0) center value	0.0~FH Hz	0.1/0.01	0.0	Enabled	-	●/●	-	-	*1
F432	0432	Speed limit (torque = 0) band	0.0~FH Hz	0.1/0.01	0.0	Enabled	-	●/●	-	-	*1
F435	0435	Prohibition of rotation in any direction other than the specified one (F or R)	0:Disabled 1:Enabled	1/1	0	Enabled	-	●/●	-	-	*1

*1: ⇒ For details, refer to Instruction Manual (E6581331) specified in Section 6.42. *2: Inverter with a model number ending with -WN, HN: 60.0 -WP: 50.0

[20] Torque limit [1/2]

Sensorless vector/vector with sensor (●:Effective, -:Ineffective)

Title	Communication No.	Function	Adjustment range	Minimum setting unit (Panel/Communication)	Default setting	Write during running	Vector control		PM control	V/f Constant	Reference
							Speed control	Torque control			
F440	0440	Power running torque limit 1 selection	1:VI/II (voltage/current input) 2:RR/S4 (potentiometer/voltage input) 3:RX (voltage input) 4:F441	1/1	4	Enabled	●/●	●/●	●	-	6. 25. 1
F441	0441	Power running torque limit 1 level	0.0~249.9%, 250.0:Disabled	0.1/0.01	250.0	Enabled	●/●	●/●	●	-	6. 25. 1
F442	0442	Regenerative braking torque limit 1 selection	1:VI/II (voltage/current input) 2:RR/S4 (potentiometer/voltage input) 3:RX (voltage input) 4:F443	1/1	4	Enabled	●/●	●/●	●	-	6. 25. 1
F443	0443	Regenerative braking torque limit 1 level	0.0~249.9%, 250.0:Disabled	0.1/0.01	250.0	Enabled	●/●	●/●	●	-	6. 25. 1
F444	0444	Power running torque limit 2 level	0.0~249.9%, 250.0:Disabled	0.1/0.01	250.0	Enabled	●/●	●/●	●	-	6. 25. 1

[20] Torque limit [2/2]

Sensorless vector/vector with sensor (●:Effective, -:Ineffective)

Title	Communication No.	Function	Adjustment range	Minimum setting unit (Panel/Communication)	Default setting	Write during running	Vector control		PM control	V/f Constant	Reference
							Speed control	Torque control			
F445	0445	Regenerative braking torque limit 2 level	0.0~249.9%, 250.0:Disabled	0.1/0.01	250.0	Enabled	●/●	●/●	●	-	6. 25. 1
F446	0446	Power running torque limit 3 level	0.0~249.9%, 250.0:Disabled	0.1/0.01	250.0	Enabled	●/●	●/●	●	-	6. 25. 1
F447	0447	Regenerative braking torque limit 3 level	0.0~249.9%, 250.0:Disabled	0.1/0.01	250.0	Enabled	●/●	●/●	●	-	6. 25. 1
F448	0448	Power running torque limit 4 level	0.0~249.9%, 250.0:Disabled	0.1/0.01	250.0	Enabled	●/●	●/●	●	-	6. 25. 1
F449	0449	Regenerative braking torque limit 4 level	0.0~249.9%, 250.0:Disabled	0.1/0.01	250.0	Enabled	●/●	●/●	●	-	6. 25. 1
F451	0451	Acceleration/deceleration operation after torque limit	0:In sync with acceleration/deceleration 1:In sync with min. time	1/1	0	Disabled	●/●	-	●	-	6. 25. 2
F452	0452	Power running stall continuous trip detection time	0.0~1.0 sec.	0.1/0.1	0.0	Enabled	●/●	-	●	●	6. 26. 1
F453	0453	Regenerative braking stall prevention mode selection	0:Stall during regenerative braking 1:Not stall during regenerative braking	1/1	0	Enabled	●/●	-	●	●	6. 26. 2
F454	0454	Constant output zone torque limit selection	0:Constant output limit 1:Constant torque limit	1/1	0	Disabled	●/●	●/●	●	-	6. 25. 1
F455	0455	Torque reference polarity selection	0:It is interchangeable so far. (When reversing,reverses the polarity.) 1:The polarity doesn't reverse when reversing.	1/1	0	Disabled	●/●	●/●	●	-	*1

*1: ⇒ For details, refer to Instruction Manual (E6581331) specified in Section 6.42

[21] Adjustment parameters [1/2]

Sensorless vector/vector with sensor (●:Effective, -:Ineffective)

Title	Communication No.	Function	Adjustment range	Minimum setting unit (Panel/Communication)	Default setting	Write during running	Vector control		PM control	V/f Constant	Reference
							Speed control	Torque control			
F458	0458	Current control proportional gain	0.0~1000	1/1	0	Disabled	●/●	●/●	-	-	*1
F460	0460	Speed loop proportional gain	1~9999	1/1	12	Enabled	●/●	-	-	-	*1
F461	0461	Speed loop stabilization coefficient	1~9999	1/1	100	Enabled	●/●	-	-	-	*1
F462	0462	Moment of inertia of load 1	0~100	1/1	35	Enabled	●/●	-	●	-	*1
F463	0463	Second speed loop proportional gain	1~9999	1/1	12	Enabled	●/●	-	-	-	*1
F464	0464	Second speed loop stabilization coefficient	1~9999	1/1	100	Enabled	●/●	-	●	-	*1
F465	0465	Moment of inertia of load 2	0~100	1/1	35	Enabled	●/●	-	●	-	*1
F466	0466	Speed PI switching frequency	0.0~FH Hz	1/1	0.0	Enabled	●/●	-	-	-	*1
F467	0467	Motor oscillation control	0:Disabled 1:Enabled(Low gain) 2:Enabled(Middle gain) 3:Enabled(High gain)	1/1	0	Disabled	-/-	-/-	-	●	6.27.2
F468	0468	Stall prevention control switching	0: Stall prevention control 1 1: Stall prevention control 2	1/1	0	Disabled	-/-	-/-	-	●	6.26.3

*1: ⇒ For details, refer to Instruction Manual (E6581333) specified in Section 6.42.
*2: ⇒ Settings vary from unit to unit. Even if tYP is set to 3, no change is made to these values.

[21] Adjustment parameters [2/2]

Sensorless vector/vector with sensor (●:Effective, -:Ineffective)

Title	Communication No.	Function	Adjustment range	Minimum setting unit (Panel/Communication)	Default setting	Write during running	Vector control: Speed control	Vector control: Torque control	PM control	V/f Constant	Reference
F469	0469	Overvoltage limit constant	0: Automatic, 1~1000ms	1/1	0	Disabled	-/-	-/-	-	●	6.14.2
F470	0470	VI/II input bias	0~255	1/1	*2	Enabled	●/●	●/●	●	●	6. 28
F471	0471	VI/II input gain	0~255	1/1	*2	Enabled	●/●	●/●	●	●	6. 28
F472	0472	RR/S4 input bias	0~255	1/1	*2	Enabled	●/●	●/●	●	●	6. 28
F473	0473	RR/S4 input gain	0~255	1/1	*2	Enabled	●/●	●/●	●	●	6. 28
F474	0474	RX input bias	0~255	1/1	*2	Enabled	●/●	●/●	●	●	6. 28
F475	0475	RX input gain	0~255	1/1	*1	Enabled	●/●	●/●	●	●	6. 28
F476	0476	Optional AI1 input bias	0~255	1/1	*1	Enabled	●/●	●/●	●	●	6. 28
F477	0477	Optional AI1 input gain	0~255	1/1	*1	Enabled	●/●	●/●	●	●	6. 28
F478	0478	Optional AI2 input bias	0~255	1/1	*1	Enabled	●/●	●/●	●	●	6. 28
F479	0479	Optional AI2 input gain	0~255	1/1	*1	Enabled	●/●	●/●	●	●	6. 28
F495	0495	Max output voltage modulation rate	0:Standard 1:Straight 100% 2:102.5% 3:105%	1/1	0	Disabled	●/●	●/●	●	●	6.27.3
F498	0498	PM motor constant 1 (d axis inductance)	0~100%	0.1/0.1	10.0	Disabled	-	-	●	-	6. 29
F499	0499	PM motor constant 2 (q axis inductance)	0~100%	0.1/0.1	10.0	Disabled	-	-	●	-	6. 29

*1: ⇒ Settings vary from unit to unit. Even if tYP is set to 3, no change is made to these values.

[22] Acceleration/deceleration 2 [1/2]

Sensorless vector/vector with sensor (●:Effective, -:Ineffective)

Title	Communication No.	Function	Adjustment range	Minimum setting unit (Panel/Communication)	Default setting	Write during running	Vector control: Speed control	Vector control: Torque control	PM control	V/f Constant	Reference
F500	0500	Acceleration time 2	0.1~6000 sec.	0.1/0.1 *2	*1	Enabled	●/●	-	●	●	6. 30. 1
F501	0501	Deceleration time 2	0.1~6000 sec.	0.1/0.1 *2	*1	Enabled	●/●	-	●	●	6. 30. 1
F502	0502	Acceleration/deceleration 1 pattern	0:Straight, 1:S-pattern 1, 2:S-pattern 2	1/1	0	Enabled	●/●	-	●	●	6. 30. 1
F503	0503	Acceleration/deceleration 2 pattern	0:Straight, 1:S-pattern 1, 2:S-pattern 2	1/1	0	Enabled	●/●	-	●	●	6. 30. 1
F504	0504	Panel acceleration/deceleration selection	1:Acceleration/deceleration 1 2:Acceleration/deceleration 2 3:Acceleration/deceleration 3 4:Acceleration/deceleration 4	1/1	1	Enabled	●/●	-	●	●	6. 30. 1
F505	0505	Acceleration/deceleration switching frequency 1	0.0~FH Hz	0. 1/0.01	0.0	Enabled	●/●	-	●	●	6. 30. 1
F506	0506	Acceleration S-pattern lower limit adjustment	0~50%	1/1	10	Enabled	●/●	-	●	●	6. 30. 1
F507	0507	Acceleration S-pattern upper limit adjustment	0~50%	1/1	10	Enabled	●/●	-	●	●	6. 30. 1
F508	0508	Deceleration S-pattern lower limit adjustment	0~50%	1/1	10	Enabled	●/●	-	●	●	6. 30. 1

*1: Default values vary depending on the capacity. ⇒ See the table of K-46.
*2: Changing the parameter tYP enables to set to 0.01 sec. (adjustment range: 0.01~600.0 sec.).

[22] Acceleration/deceleration 2 [2/2]

Sensorless vector/vector with sensor (●:Effective, -:Ineffective)

Title	Communication No.	Function	Adjustment range	Minimum setting unit (Panel/Communication)	Default setting	Write during running	Vector control		PM control	V/f Constant	Reference
							Speed control	Torque control			
F509	0509	Deceleration S-pattern upper limit adjustment	0~50%	1/1	10	Enabled	●/●	-	●	●	6. 30. 1
F510	0510	Acceleration time 3	0.1~6000 sec.	0.1/0.1 *2	*1	Enabled	●/●	-	●	●	6. 30. 1
F511	0511	Deceleration time 3	0.1~6000 sec.	0.1/0.1 *2	*1	Enabled	●/●	-	●	●	6. 30. 1
F512	0512	Acceleration/ deceleration 3 pattern	0:Straight, 1:S-pattern 1, 2:S-pattern 2	1/1	0	Enabled	●/●	-	●	●	6. 30. 1
F513	0513	Acceleration/deceleration switching frequency 2	0.0~FH Hz	0.1/0.01	0.0	Enabled	●/●	-	●	●	6. 30. 1
F514	0514	Acceleration time 4	0.1~6000 sec.	0.1/0.1 *2	*1	Enabled	●/●	-	●	●	6. 30. 1
F515	0515	Deceleration time 4	0.1~6000 sec.	0.1/0.1 *2	*1	Enabled	●/●	-	●	●	6. 30. 1
F516	0516	Acceleration/ deceleration 4 pattern	0:Straight, 1:S-pattern 1, 2:S-pattern 2	1/1	0	Enabled	●/●	-	●	●	6. 30. 1
F517	0517	Acceleration/deceleration switching frequency 3	0.0~FH Hz	0.1/0.01	0.0	Enabled	●/●	-	●	●	6. 30. 1

*1: Default values vary depending on the capacity. ⇒ See the table of K-46.
*2: Changing the parameter tYP enables to set to 0.01 sec. (adjustment range: 0.01~600.0 sec.).

[23] Pattern operation [1/3]

Sensorless vector/vector with sensor (●:Effective, -:Ineffective)

Title	Communication No.	Function	Adjustment range	Minimum setting unit (Panel/Communication)	Default setting	Write during running	Vector control		PM control	V/f Constant	Reference
							Speed control	Torque control			
F520	0520	Pattern operation selection	0:Disabled 1:Enabled (setting in units of seconds) 2:Enabled (setting in units of minutes)	1/1	0	Disabled	●/●	-	●	●	6. 31
F521	0521	Pattern operation mode	0:Pattern operation reset when system stops operation 1:Pattern operation continued even after system stops operation	1/1	0	Disabled	●/●	-	●	●	6. 31
F522	0522	Number of repetitions of pattem group 1	1~254, 255:Successive	1/1	1	Disabled	●/●	-	●	●	6. 31
F523	0523	Pattern group 1 selection 1	0:Skip, 1~15	1/1	0	Disabled	●/●	-	●	●	6. 31
F524	0524	Pattern group 1 selection 2	0:Skip, 1~15	1/1	0	Disabled	●/●	-	●	●	6. 31
F525	0525	Pattern group 1 selection 3	0:Skip, 1~15	1/1	0	Disabled	●/●	-	●	●	6. 31
F526	0526	Pattern group 1 selection 4	0:Skip, 1~15	1/1	0	Disabled	●/●	-	●	●	6. 31
F527	0527	Pattern group 1 selection 5	0:Skip, 1~15	1/1	0	Disabled	●/●	-	●	●	6. 31
F528	0528	Pattern group 1 selection 6	0:Skip, 1~15	1/1	0	Disabled	●/●	-	●	●	6. 31
F529	0529	Pattern group 1 selection 7	0:Skip, 1~15	1/1	0	Disabled	●/●	-	●	●	6. 31
F530	0530	Pattern group 1 selection 8	0:Skip, 1~15	1/1	0	Disabled	●/●	-	●	●	6. 31
F531	0531	Number of repetitions of pattem group 2	1~254, 255:Successive	1/1	1	Disabled	●/●	-	●	●	6. 31
F532	0532	Pattern group 2 selection 1	0:Skip, 1~15	1/1	0	Disabled	●/●	-	●	●	6. 31
F533	0533	Pattern group 2 selection 2	0:Skip, 1~15	1/1	0	Disabled	●/●	-	●	●	6. 31
F534	0534	Pattern group 2 selection 3	0:Skip, 1~15	1/1	0	Disabled	●/●	-	●	●	6. 31
F535	0535	Pattern group 2 selection 4	0:Skip, 1~15	1/1	0	Disabled	●/●	-	●	●	6. 31
F536	0536	Pattern group 2 selection 5	0:Skip, 1~15	1/1	0	Disabled	●/●	-	●	●	6. 31

[23] Pattern operation [2/3]

Sensorless vector/vector with sensor (●:Effective, -:Ineffective)

Title	Communication No.	Function	Adjustment range	Minimum setting unit (Panel/Communication)	Default setting	Write during running	Vector control		PM control	V/f Constant	Reference
							Speed control	Torque control			
F537	0537	Pattern group 2 selection 6	0:Skip, 1~15	1/1	0	Disabled	●/●	-	●	●	6. 31
F538	0538	Pattern group 2 selection 7	0:Skip, 1~15	1/1	0	Disabled	●/●	-	●	●	6. 31
F539	0539	Pattern group 2 selection 8	0:Skip, 1~15	1/1	0	Disabled	●/●	-	●	●	6. 31
F540	0540	Speed 1 operation time	0.1~6000 (The unit depends on the setting of F520.) 6000:Infinite (depends on the stop trigger entered)	0.1/0.1	5.0	Enabled	●/●	-	●	●	6. 31
F541	0541	Speed 2 operation time	Ditto	0.1/0.1	5.0	Enabled	●/●	-	●	●	6. 31
F542	0542	Speed 3 operation time	Ditto	0.1/0.1	5.0	Enabled	●/●	-	●	●	6. 31
F543	0543	Speed 4 operation time	Ditto	0.1/0.1	5.0	Enabled	●/●	-	●	●	6. 31
F544	0544	Speed 5 operation time	Ditto	0.1/0.1	5.0	Enabled	●/●	-	●	●	6. 31
F545	0545	Speed 6 operation time	Ditto	0.1/0.1	5.0	Enabled	●/●	-	●	●	6. 31
F546	0546	Speed 7 operation time	Ditto	0.1/0.1	5.0	Enabled	●/●	-	●	●	6. 31
F547	0547	Speed 8 operation time	Ditto	0.1/0.1	5.0	Enabled	●/●	-	●	●	6. 31
F548	0548	Speed 9 operation time	Ditto	0.1/0.1	5.0	Enabled	●/●	-	●	●	6. 31
F549	0549	Speed 10 operation time	Ditto	0.1/0.1	5.0	Enabled	●/●	-	●	●	6. 31
F550	0550	Speed 11 operation time	Ditto	0.1/0.1	5.0	Enabled	●/●	-	●	●	6. 31
F551	0551	Speed 12 operation time	Ditto	0.1/0.1	5.0	Enabled	●/●	-	●	●	6. 31
F552	0552	Speed 13 operation time	Ditto	0.1/0.1	5.0	Enabled	●/●	-	●	●	6. 31
F553	0553	Speed 14 operation time	Ditto	0.1/0.1	5.0	Enabled	●/●	-	●	●	6. 31
F554	0554	Speed 15 operation time	Ditto	0.1/0.1	5.0	Enabled	●/●	-	●	●	6. 31
F560	0560	Preset speed operation mode selection	0:Preset speed operation with no mode 1:Preset speed operation with mode	1/1	0	Disabled	●/●	-	●	●	5. 12
F561	0561	Preset speed operation frequency 1 operation mode	0:Forward run +1:Reverse run +2:Acceleration/deceleration switching signal 1 +4:Acceleration/deceleration switching signal 2 +8:V/f switching signal 1 +16:V/f switching signal 2 +32:Torque limit switching signal 1 +64:Torque limit switching signal 2	1/1	0	Disabled	●/●	-	●	●	5. 12
F562	0562	Preset speed operation frequency 2 operation mode	Ditto	1/1	0	Disabled	●/●	-	●	●	5. 12
F563	0563	Preset speed operation frequency 3 operation mode	Ditto	1/1	0	Disabled	●/●	-	●	●	5. 12
F564	0564	Preset speed operation frequency 4 operation mode	Ditto	1/1	0	Disabled	●/●	-	●	●	5. 12
F565	0565	Preset speed operation frequency 5 operation mode	Ditto	1/1	0	Disabled	●/●	-	●	●	5. 12
F566	0566	Preset speed operation frequency 6 operation mode	Ditto	1/1	0	Disabled	●/●	-	●	●	5. 12
F567	0567	Preset speed operation frequency 7 operation mode	Ditto	1/1	0	Disabled	●/●	-	●	●	5. 12
F568	0568	Preset speed operation frequency 8 operation mode	Ditto	1/1	0	Disabled	●/●	-	●	●	5. 12
F569	0569	Preset speed operation frequency 9 operation mode	Ditto	1/1	0	Disabled	●/●	-	●	●	5. 12

[23] Pattern operation [3/3]

Sensorless vector/vector with sensor (●:Effective, -:Ineffective)

Title	Communication No.	Function	Adjustment range	Minimum setting unit (Panel/Communication)	Default setting	Write during running	Vector control: Speed control	Vector control: Torque control	PM control	V/f Constant	Reference
F570	0570	Preset speed operation frequency 10 operation mode	Ditto	1/1	0	Disabled	●/●	-	●	●	5. 12
F571	0571	Preset speed operation frequency 11 operation mode	Ditto	1/1	0	Disabled	●/●	-	●	●	5. 12
F572	0572	Preset speed operation frequency 12 operation mode	Ditto	1/1	0	Disabled	●/●	-	●	●	5. 12
F573	0573	Preset speed operation frequency 13 operation mode	Ditto	1/1	0	Disabled	●/●	-	●	●	5. 12
F574	0574	Preset speed operation frequency 14 operation mode	Ditto	1/1	0	Disabled	●/●	-	●	●	5. 12
F575	0575	Preset speed operation frequency 15 operation mode	Ditto	1/1	0	Disabled	●/●	-	●	●	5. 12

[24] Communication function

Sensorless vector/vector with sensor (●:Effective, -:Ineffective)

Title	Communication No.	Function		Adjustment range	Minimum setting unit (Panel/Communication)	Default setting	Write during running	Vector control: Speed control	Vector control: Torque control	PM control	V/f Constant	Reference
F576	0576	IP address setting method		0: Manual setting (F577~F580 Enabled) 1: BOOTP 2: DHCP	1/1	0	Enabled	●/●	●/●	●	●	*1
F577	0577	IP card	Data1	0~255	1/1	0	Enabled	●/●	●/●	●	●	*1
F578	0578		Data2	0~255	1/1	0	Enabled	●/●	●/●	●	●	*1
F579	0579		Data3	0~255	1/1	0	Enabled	●/●	●/●	●	●	*1
F580	0580		Data4	0~255	1/1	0	Enabled	●/●	●/●	●	●	*1
F581	0581	Subnet mask	Data1	0~255	1/1	0	Enabled	●/●	●/●	●	●	*1
F582	0582		Data2	0~255	1/1	0	Enabled	●/●	●/●	●	●	*1
F583	0583		Data3	0~255	1/1	0	Enabled	●/●	●/●	●	●	*1
F584	0584		Data4	0~255	1/1	0	Enabled	●/●	●/●	●	●	*1
F585	0585	IP gate1	Data1	0~255	1/1	0	Enabled	●/●	●/●	●	●	*1
F586	0586		Data2	0~255	1/1	0	Enabled	●/●	●/●	●	●	*1
F587	0587		Data3	0~255	1/1	0	Enabled	●/●	●/●	●	●	*1
F588	0588		Data4	0~255	1/1	0	Enabled	●/●	●/●	●	●	*1
F589	0589	IP master	Data1	0~255	1/1	0	Enabled	●/●	●/●	●	●	*1
F590	0590		Data2	0~255	1/1	0	Enabled	●/●	●/●	●	●	*1
F591	0591		Data3	0~255	1/1	0	Enabled	●/●	●/●	●	●	*1
F592	0592		Data4	0~255	1/1	0	Enabled	●/●	●/●	●	●	*1
F593	0593	IO scan permission		0: Prohibit 1: Permit	1/1	0	Enabled	●/●	●/●	●	●	*1
F594	0594	Communication time-out (Modbus)		0.0~60.0sec.	0.1/0.1	0	Enabled	●/●	●/●	●	●	*1

*1:⇒This function is for Etherenet communication option.(planning)

[25] Protection functions [1/2]

Sensorless vector/vector with sensor (●:Effective, -:Ineffective)

Title	Communication No.	Function	Adjustment range	Minimum setting unit (Panel/Communication)	Default setting	Write during running	Vector control		PM control	V/f Constant	Reference
							Speed control	Torque control			
F601	0601	Stall prevention level	10~164%, 165:Deactivated	1/1	150	Enabled	●/●	-	●	●	6. 33. 1
F602	0602	Inverter trip record retention selection	0:Clear when power is turned off 1:Retain even after power is turned off	1/1	0	Enabled	●/●	●/●	●	●	6. 33. 2
F603	0603	Emergency stop	0:Coast stop 1:Deceleration stop 2:Emergency DC braking 3:Deceleration stop (deceleration 4)	1/1	0	Disabled	●/●	●/●	●	●	6. 33. 3
F604	0604	Emergency DC braking control time	0.0~20.0 sec.	0.1/0.1	1.0	Enabled	●/●	●/●	●	●	6. 33. 3
F605	0605	Output phase failure detection mode selection	0:Deselect 1:At starting (only one time after power is turned on) 2:At starting (each time power is turned on) 3:During operation 4:At starting + during operation 5:Output cut-off detection enabled	1/1	0	Disabled	●/●	●/●	●	●	6. 33. 4
F606	0606	OL reduction starting frequency	0.0~60.0Hz	0.1/0.01	6.0	Enabled	●/●	●/●	●	●	5. 14
F607	0607	Motor 150%-overload time limit	10~2400 sec.	1/1	300	Enabled	●/●	●/●	●	●	5. 14
F608	0608	Input phase failure detection mode selection	0:Disabled 1:Enabled	1/1	1	Disabled	●/●	●/●	●	●	6. 33. 7
F609	0609	Low current detection hysteresis width	1~20%	1/1	10	Enabled	●/●	●/●	●	●	6. 33. 8
F610	0610	Low current trip selection	0:No trip 1:Trip	1/1	0	Enabled	●/●	●/●	●	●	6. 33. 8
F611	0611	Low current detection current	0~100%	1/1	0	Enabled	●/●	●/●	●	●	6. 33. 8
F612	0612	Low current detection time	0~255 sec.	1/1	0	Enabled	●/●	●/●	●	●	6. 33. 8
F613	0613	Selection of short circuit detection at starting	0:Each time (standard pulse) 1:Only one time after power is turned on 2:Each time (short pulse) 3.Only one time after power is turn on (short pulse) 4:Each time (Extremely shot-time pulse) 5.Only one time after power is turn on (Extremely shot-time pulse)	1/1	0	Disabled	●/●	●/●	●	●	6. 33. 9
F615	0615	Overtorque trip selection	0:No trip 1:Trip	1/1	0	Enabled	●/●	●/●	●	●	6. 33. 10
F616	0616	Overtorque detection level during power running	0~250%	1/0.01	150	Enabled	●/●	●/●	●	●	6. 33. 10
F617	0617	Overtorque detection level during regenerative braking	0~250%	1/0.01	150	Enabled	●/●	●/●	●	●	6. 33. 10
F618	0618	Overtorque detection time	0.00~10.00 sec.	0.01/0.01	0.50	Enabled	●/●	●/●	●	●	6. 33. 10
F619	0619	Overtorque detection hysteresis	0~100%	1/0.01	10	Enabled	●/●	●/●	●	●	6. 33. 10
F620	0620	Cooling fan control selection	0:Auto 1:Always ON	1/1	0	Enabled	●/●	●/●	●	●	6. 33. 11
F621	0621	Cumulative operation time alarm setting	0.1~999.9 (x100h)	0.1/0.1	610.0	Enabled	●/●	●/●	●	●	6. 33. 12

[25] Protection functions [2/2]

Sensorless vector/vector with sensor (●:Effective, -:Ineffective)

Title	Communication No.	Function	Adjustment range	Minimum setting unit (Panel/Communication)	Default setting	Write during running	Vector control		PM control	V/f Constant	Reference
							Speed control	Torque control			
F622	0622	Abnormal speed detection time	0.01~100.0 sec.	0.01/0.01	0.01	Enabled	●/●	●/●	●	●	6. 33. 13
F623	0623	Overspeed detection frequency upper band	0.00:Disabled, 0.01~30.0Hz	0.01/0.01	0.0	Enabled	●/●	●/●	●	●	6. 33. 13
F624	0624	Overspeed detection frequency lower band	0.00:Disabled, 0.01~30.0Hz	0.01/0.01	0.0	Enabled	●/●	●/●	●	●	6. 33. 13
F625	0625	Undervoltage detection level	50~79%, 80: (auto mode)	1/1	80	Disabled	●/●	●/●	●	●	6. 33. 15
F626	0626	Overvoltage limit operation level	100~150%	1/1	134	Disabled	●/●	-	●	●	6. 14. 2
F627	0627	Undervoltage trip selection	0:Disabled 1:Enabled	1/1	0	Disabled	●/●	●/●	●	●	6. 33. 15
F628	0628	Undervoltage (trip alarm) detection time	0.01~10.00 sec.	0.01/0.01	0.03	Disabled	●/●	●/●	●	●	6. 33. 15
F629	0629	Regenerative power ride-through control level	55~100%	1/1	75	Disabled	●/●	●/●	●	●	6. 33. 16
F630	0630	Braking answer waiting time	0.0:Disabled, 0.1~10.0 sec.	0.1/0.1	0.0	Enabled	●/●	-	-	-	6. 33. 17
F631	0631	Temperature detection	0:Standard (150%-60 sec.) 1:Estimation of temperature	1/1	0	Disabled	-	-	-	-	5. 14
F633	0633	VI/II analog input wire breakage detection level	0:None 1~100%	1/1	0	Enabled	●/●	●/●	●	●	6. 33. 18
F634	0634	Annual average ambient temperature (calculation for part replacement alarms)	1:-10~+10°C 2:+11~+20°C 3:+21~+30°C 4:+31~+40°C 5:+41~+50°C 6:+51~+60°C	1/1	3	Enabled	●/●	●/●	●	●	6. 33. 19
F635	0635	Rush current suppression relay activation time	0.0~2.5 sec.	0.1/0.1	0.0	Disabled	●/●	●/●	●	●	6. 33. 20
F637	0637	PTC1 thermal selection	0:Deselect 1:Select	1/1	0	Disabled	●/●	●/●	●	●	*1
F638	0638	PTC2 thermal selection	0:Deselect 1:Select	1/1	0	Disabled	●/●	●/●	●	●	*1
F639	0639	Braking resistance overload time (10 times of rated torque)	0.1~600.0 sec.	0.1/0.1	5.0	Disabled	●/●	●/●	●	●	5. 19
F640	0640	Step-out detection current level (for PM motors)	10~150	1/1	100	Disabled	-	-	●	-	6. 29
F641	0641	Step-out detection time (for PM motors)	0.0:Not detect 0.1~25.0	0.1/0.1	0.0	Disabled	-	-	●	-	6. 29
F643	0643	Brake-equipped motor restart condition selection	0:Default (no waiting time for frequencies of 10Hz and less) 1:Conditional (no waiting time for frequencies of 20Hz and less)	1/1	0	Disabled	●/●	●/●	●	●	6. 33. 23
F647	0647	Control power supply backup option failure monitoring	0:Control power supply not backed up 1:Control power supply backed up (alarm in the event of a failure) 2:Control power supply backed up (tripping in the event of a failure)	1/1	0	Disabled	●/●	●/●	●	●	6. 33. 24

*1: ⇒ For details, refer to Instruction Manual (E6581339) specified in Section 6.42.

[26] Override

Sensorless vector/vector with sensor (●:Effective, -:Ineffective)

Title	Communication No.	Function	Adjustment range	Minimum setting unit (Panel/Communication)	Default setting	Write during running	Vector control: Speed control	Vector control: Torque control	PM control	V/f Constant	Reference
F660	0660	Override addition input selection	0:Disabled 1:VI/II (voltage/current input) 2:RR/S4 (potentiometer/voltage input) 3:RX (voltage input) 4:Operation panel input enabled (including LED/LCD option input) 5:2-wire RS485 input enabled 6:4-wire RS485 input enabled 7:Communications option input enabled 8:Optional AI1 (differential current input) 9:Optional AI2 (voltage/current input) 10:UP/DOWN frequency 11:Optional RP pulse input 12:Optional high-speed pulse input 13:-	1/1	0	Enabled	●/●	-	●	●	6. 34
F661	0661	Override multiplication input selection	0:Disabled, 1:VI/II, 2:RR/S4, 3:RX, 4:F729, 5:Optional AI1	1/1	0	Enabled	●/●	-	●	●	6. 34
F669	0669	Logic output/pulse output selection (OUT1)	0:Logic output 1:Pulse output	1/1	0	Disabled	●/●	●/●	●	●	6. 35. 1
AMSL	0670	AM terminal meter selection	0~64 *1	1/1	2	Enabled	●/●	●/●	●	●	5. 16

This parameter moves to a fundamental parameter.

*1: ⇒ For the adjustment range, see the table on page K-39.

[27] Meter output [1/2]

Sensorless vector/vector with sensor (●:Effective, -:Ineffective)

Title	Communication No.	Function	Adjustment range	Minimum setting unit (Panel/Communication)	Default setting	Write during running	Vector control: Speed control	Vector control: Torque control	PM control	V/f Constant	Reference
AM	0671	AM terminal meter adjustment	-	1/1	-	Enabled	●/●	●/●	●	●	5. 16
F672	0672	MON1 terminal meter selection	0~76 *1	1/1	4	Enabled	●/●	●/●	●	●	*2
F673	0673	MON1 terminal meter adjustment	-	1/1	-	Enabled	●/●	●/●	●	●	*2
F674	0674	MON2 terminal meter selection	0~76 *1	1/1	5	Enabled	●/●	●/●	●	●	*2
F675	0675	MON2 terminal meter adjustment	-	1/1	-	Enabled	●/●	●/●	●	●	*2
F676	0676	Pulse output function selection	0~49 *1	1/1	0	Enabled	●/●	●/●	●	●	6. 35. 1
F677	0677	Selection of number of pulses	1.00~43.20kHz	0.01/0.01	3.84	Enabled	●/●	●/●	●	●	6. 35. 1
F678	0678	Constant at the time of filtering	4msec, 8msec~100msec	1/1	64	Enabled	●/●	●/●	●	●	5. 16
F681	0681	FM voltage/current output switching	0:Voltage 0~10V output 1:Current 0~20mA output	1/1	0	Disabled	●/●	●/●	●	●	6. 35. 3
F682	0682	FM output gradient characteristic	0:Negative gradient (descending) 1:Positive gradient (ascending)	1/1	1	Enabled	●/●	●/●	●	●	6. 35. 3
F683	0683	FM bias adjustment	-10.0~100.0%	0.1/0.1	0.0	Enabled	●/●	●/●	●	●	6. 35. 3

This parameter moves to a fundamental parameter.

*1: ⇒ For the adjustment range, see the table on page K-39.

*2: ⇒ For details, refer to Instruction Manual (E6581341) specified in Section 6.42.

[27] Meter output [2/2]

Sensorless vector/vector with sensor (●:Effective, -:Ineffective)

Title	Communication No.	Function	Adjustment range	Minimum setting unit (Panel/Communication)	Default setting	Write during running	Vector control		PM control	V/f Constant	Reference
							Speed control	Torque control			
F684	0684	FM output filter	0:No filter 1:Filter approx. 10ms 2:Filter approx. 15ms 3:Filter approx. 30ms 4:Filter approx. 60ms 5:Filter approx. 120ms 6:Filter approx. 250ms 7:Filter approx. 500ms 8:Filter approx. 1s	1/1	0	Enabled	●/●	●/●	●	●	5. 16
F685	0685	AM output gradient characteristic	0:Negative inclination (downward slope) 1:Positive inclination (upward slope)	1/1	1	Enabled	●/●	●/●	●	●	6. 35. 3
F686	0686	AM bias adjustment	-10.0~100.0%	0.1/0.1	0.0	Enabled	●/●	●/●	●	●	6. 35. 3
F688	0688	MON1 voltage/current output switching	0:Voltage -10~10V output 1:Voltage 0~10V output 2:Current 0~20mA output	1/1	1	Disabled	●/●	●/●	●	●	*2
F689	0689	MON1 output gradient characteristic	0:Negative inclination (downward slope) 1:Positive inclination (upward slope)	1/1	1	Enabled	●/●	●/●	●	●	*2
F690	0690	MON1 bias adjustment	-10.0~100.0%	0.1/0.1	0.0	Enabled	●/●	●/●	●	●	*2
F691	0691	MON2 voltage/current output switching	0:Voltage -10~10V output 1:Voltage 0~10V output 2:Current 0~20mA output	1/1	1	Disabled	●/●	●/●	●	●	*2
F692	0692	MON2 output gradient characteristic	0:Negative inclination (downward slope) 1:Positive inclination (upward slope)	1/1	1	Enabled	●/●	●/●	●	●	*2
F693	0693	MON2 bias adjustment	-10.0~100.0%	0.1/0.1	0.0	Enabled	●/●	●/●	●	●	*2

This parameter moves to a fundamental parameter.

*1: ⇒ For the adjustment range, see the table on page K-39.

*2: ⇒ For details, refer to Instruction Manual (E6581341) specified in Section 6.42.

[28] Operation panel parameters [1/3]

Sensorless vector/vector with sensor (●:Effective, -:Ineffective)

Title	Communication No.	Function	Adjustment range	Minimum setting unit (Panel/Communication)	Default setting	Write during running	Vector control		PM control	V/f Constant	Reference
							Speed control	Torque control			
F700	0700	Parameter write protect selection	0:Permit 1:Prohibit	1/1	0	Enabled	●/●	●/●	●	●	6. 36. 1
dSPU	0701	Current/voltage unit selection	0:%, 1:A (ampere)/V (volt)	1/1	0	Enabled	●/●	●/●	●	●	5. 15
F702	0702	Frequency free unit display magnification	0.00:OFF, 0.01~200.0	0.01/0.01	0.00	Enabled	●/●	●/●	●	●	6. 36. 2
F703	0703	Frequency free unit conversion selection	0:All frequencies display free unit conversion 1:PID frequencies free unit conversion	1/1	0	Enabled	●/●	●/●	●	●	6. 36. 2
F705	0705	Free unit display gradient characteristic	0:Negative inclination (downward slope) 1:Positive inclination (upward slope)	1/1	1	Enabled	●/●	●/●	●	●	6. 36. 2
F706	0706	Free unit display bias	0.00~FH Hz	0.01/0.01	0.00	Enabled	●/●	●/●	●	●	6. 36. 2
F707	0707	Changing step selection 1	0.00:Disabled, 0.01~FH Hz	0.01/0.01	0.00	Enabled	●/●	●/●	●	●	6. 36. 3
F708	0708	Changing step selection 2	0:Disabled, 1~255	1/1	0	Enabled	●/●	●/●	●	●	6. 36. 3
F709	0709	Standard monitor hold function	0:Real time, 1:Peak hold, 2:Minimum hold	1/1	0	Enabled	●/●	●/●	●	●	8. 3
F710	0710	Standard monitor display selection	0~80 *1	1/1	0	Enabled	●/●	●/●	●	●	8. 3
F711	0711	Status monitor 1 display selection	Ditto	1/1	1	Enabled	●/●	●/●	●	●	8. 3
F712	0712	Status monitor 2 display selection	Ditto	1/1	2	Enabled	●/●	●/●	●	●	8. 3
F713	0713	Status monitor 3 display selection	Ditto	1/1	3	Enabled	●/●	●/●	●	●	8. 3
F714	0714	Status monitor 4 display selection	Ditto	1/1	4	Enabled	●/●	●/●	●	●	8. 3
F715	0715	Status monitor 5 display selection	Ditto	1/1	8	Enabled	●/●	●/●	●	●	8. 3
F716	0716	Status monitor 6 display selection	Ditto	1/1	16	Enabled	●/●	●/●	●	●	8. 3
F717	0717	Status monitor 7 display selection	Ditto	1/1	15	Enabled	●/●	●/●	●	●	8. 3
F718	0718	Status monitor 8 display selection	Ditto	1/1	14	Enabled	●/●	●/●	●	●	8. 3
F719	0719	Operation command clear selection when standby terminal (ST) is OFF	0:Clear operation command 1:Retain operation command	1/1	1	Enabled	●/●	●/●	●	●	6. 36. 5
F721	0721	Operation panel stop pattern selection	0:Deceleration stop 1:Coast stop	1/1	0	Enabled	●/●	●/●	●	●	6. 36. 6
F725	0725	Operation panel torque command	-250~250%	1/0.01	0	Enabled	-	●/●	-	-	6. 36. 7
F727	0727	Operation panel tension torque bias	-250~250%	1/0.01	0	Enabled	-	●/●	-	-	6. 36. 8
F728	0728	Operation panel load sharing gain	0~250%	1/0.01	100	Enabled	-	●/●	-	-	6. 36. 8
F729	0729	Operation panel override multiplication gain	-100~100%	1/0.01	0	Enabled	●/●	-	●	●	6. 34

This parameter moves to a fundamental parameter. *1: ⇒ For the adjustment range, see the table on page K-39.

[28] Operation panel parameters [2/3]

Sensorless vector/vector with sensor (●:Effective, -:Ineffective)

Title	Communication No.	Function	Adjustment range	Minimum setting unit (Panel/Communication)	Default setting	Write during running	Vector control		PM control	V/f Constant	Reference
							Speed control	Torque control			
F730	0730	Operation panel frequency setting prohibition selection	0:Permit 1:Prohibit	1/1	0	Enabled	●/●	●/●	●	●	6. 36. 1
F734	0734	Operation panel emergency stop operation prohibition selection	0:Permit 1:Prohibit	1/1	0	Enabled	●/●	●/●	●	●	6. 36. 1
F735	0735	Operation panel reset operation prohibition selection	0:Permit 1:Prohibit	1/1	0	Enabled	●/●	●/●	●	●	6. 36. 1
F736	0736	Prohibition of change of CMOd/FMOd during operation	0:Permit 1:Prohibit	1/1	1	Enabled	●/●	●/●	●	●	6. 36. 1
F737	0737	All key operation prohibition	0:Permit 1:Prohibit	1/1	0	Enabled	●/●	●/●	●	●	6. 36. 1
F740	0740	Trace selection	0:Deselect, 1:At tripping, 2:At triggering	1/1	1	Enabled	●/●	●/●	●	●	6. 37
F741	0741	Trace cycle	0:4ms, 1:20ms, 2:100ms, 3:1s, 4:10s	1/1	2	Enabled	●/●	●/●	●	●	6. 37
F742	0742	Trace data 1	0~49	1/1	0	Enabled	●/●	●/●	●	●	6. 37
F743	0743	Trace data 2	0~49	1/1	1	Enabled	●/●	●/●	●	●	6. 37
F744	0744	Trace data 3	0~49	1/1	2	Enabled	●/●	●/●	●	●	6. 37
F745	0745	Trace data 4	0~49	1/1	3	Enabled	●/●	●/●	●	●	6. 37
F748	0748	Integrating wattmeter retention selection	0:Disabled 1:Enabled	1/1	0	Enabled	●/●	●/●	●	●	6. 38
F749	0749	Integrating wattmeter display unit selection	0:1=1kWh 1:1=10kWh 2:1=100kWh 3:1=1000kWh 4:1=10000kWh	1/1	*2	Enabled	●/●	●/●	●	●	6. 38
F750	0750	EASY key function selection	0:Quick mode/standard setting mode switching function 1:Shortcut key:Pressing for 2 sec. to record the parameter, pressing normally to jump to recorded parameter (first jump to the 1st history) 2:Operation panel/remote key:Operation panel by ON 3:Monitor peak minimum hold trigger	1/1	0	Disabled	●/●	●/●	●	●	5. 22
F751	0751	Quick registration parameter 1	0~999 *1	1/1	40 (AU4)	Enabled	●/●	●/●	●	●	5. 22
F752	0752	Quick registration parameter 2	0~999 *1	1/1	15 (pt)	Enabled	●/●	●/●	●	●	5. 22
F753	0753	Quick registration parameter 3	0~999 *1	1/1	11 (FH)	Enabled	●/●	●/●	●	●	5. 22
F754	0754	Quick registration parameter 4	0~999 *1	1/1	9 (ACC)	Enabled	●/●	●/●	●	●	5. 22
F755	0755	Quick registration parameter 5	0~999 *1	1/1	10 (dEC)	Enabled	●/●	●/●	●	●	5. 22

*1: The communication number of the parameter is used for this setting.
*2: Default values vary depending on the capacity. ⇒ See the table of K-46.

[28] Operation panel parameters [3/3]

Sensorless vector/vector with sensor (●:Effective, -:Ineffective)

Title	Communication No.	Function	Adjustment range	Minimum setting unit (Panel/Communication)	Default setting	Write during running	Vector control		PM control	V/f Constant	Reference
							Speed control	Torque control			
F756	0756	Quick registration parameter 6	0~999 *1	1/1	600 (tHr)	Enabled	●/●	●/●	●	●	5. 22
F757	0757	Quick registration parameter 7	0~999 *1	1/1	6 (FM)	Enabled	●/●	●/●	●	●	5. 22
F758	0758	Quick registration parameter 8	0~999 *1	1/1	999	Enabled	●/●	●/●	●	●	5. 22
F759	0759	Quick registration parameter 9	0~999 *1	1/1	999	Enabled	●/●	●/●	●	●	5. 22
F760	0760	Quick registration parameter 10	0~999 *1	1/1	999	Enabled	●/●	●/●	●	●	5. 22
F761	0761	Quick registration parameter 11	0~999 *1	1/1	999	Enabled	●/●	●/●	●	●	5. 22
F762	0762	Quick registration parameter 12	0~999 *1	1/1	999	Enabled	●/●	●/●	●	●	5. 22
F763	0763	Quick registration parameter 13	0~999 *1	1/1	999	Enabled	●/●	●/●	●	●	5. 22
F764	0764	Quick registration parameter 14	0~999 *1	1/1	999	Enabled	●/●	●/●	●	●	5. 22
F765	0765	Quick registration parameter 15	0~999 *1	1/1	999	Enabled	●/●	●/●	●	●	5. 22
F766	0766	Quick registration parameter 16	0~999 *1	1/1	999	Enabled	●/●	●/●	●	●	5. 22
F767	0767	Quick registration parameter 17	0~999 *1	1/1	999	Enabled	●/●	●/●	●	●	5. 22
F768	0768	Quick registration parameter 18	0~999 *1	1/1	999	Enabled	●/●	●/●	●	●	5. 22
F769	0769	Quick registration parameter 19	0~999 *1	1/1	999	Enabled	●/●	●/●	●	●	5. 22
F770	0770	Quick registration parameter 20	0~999 *1	1/1	999	Enabled	●/●	●/●	●	●	5. 22
F771	0771	Quick registration parameter 21	0~999 *1	1/1	999	Enabled	●/●	●/●	●	●	5. 22
F772	0772	Quick registration parameter 22	0~999 *1	1/1	999	Enabled	●/●	●/●	●	●	5. 22
F773	0773	Quick registration parameter 23	0~999 *1	1/1	999	Enabled	●/●	●/●	●	●	5. 22
F774	0774	Quick registration parameter 24	0~999 *1	1/1	999	Enabled	●/●	●/●	●	●	5. 22
F775	0775	Quick registration parameter 25	0~999 *1	1/1	999	Enabled	●/●	●/●	●	●	5. 22
F776	0776	Quick registration parameter 26	0~999 *1	1/1	999	Enabled	●/●	●/●	●	●	5. 22
F777	0777	Quick registration parameter 27	0~999 *1	1/1	999	Enabled	●/●	●/●	●	●	5. 22
F778	0778	Quick registration parameter 28	0~999 *1	1/1	999	Enabled	●/●	●/●	●	●	5. 22
F779	0779	Quick registration parameter 29	0~999 *1	1/1	999	Enabled	●/●	●/●	●	●	5. 22
F780	0780	Quick registration parameter 30	0~999 *1	1/1	999	Enabled	●/●	●/●	●	●	5. 22
F781	0781	Quick registration parameter 31	0~999 *1	1/1	999	Enabled	●/●	●/●	●	●	5. 22
F782	0782	Quick registration parameter 32	0~999 *1	1/1	50 (PSEL)	Enabled	●/●	●/●	●	●	5. 22

*1: The communication number of the parameter is used for this setting.

[29] Communication function [1/4]

Sensorless vector/vector with sensor (●:Effective, -:Ineffective)

Title	Communication No.	Function		Adjustment range	Minimum setting unit (Panel/Communication)	Default setting	Write during running	Vector control: Speed control	Vector control: Torque control	PM control	V/f Constant	Reference
F784	0784	MAC address	Data1	0~255	1/1	0	*1	●/●	●/●	●	●	*2
F785	0785		Data2	0~255	1/1	0	*1	●/●	●/●	●	●	*2
F786	0786		Data3	0~255	1/1	0	*1	●/●	●/●	●	●	*2
F787	0787		Data4	0~255	1/1	0	*1	●/●	●/●	●	●	*2
F788	0788		Data5	0~255	1/1	0	*1	●/●	●/●	●	●	*2
F789	0789		Data6	0~255	1/1	0	*1	●/●	●/●	●	●	*2
F792	0792	Device name	Data1	0000~FFFF	1/1	0	*1	●/●	●/●	●	●	*2
F793	0793		Data2	0000~ FFFF	1/1	0	*1	●/●	●/●	●	●	*2
F794	0794		Data3	0000~ FFFF	1/1	0	*1	●/●	●/●	●	●	*2
F795	0795		Data4	0000~ FFFF	1/1	0	*1	●/●	●/●	●	●	*2
F796	0796		Data5	0000~ FFFF	1/1	0	*1	●/●	●/●	●	●	*2
F797	0797		Data6	0000~ FFFF	1/1	0	*1	●/●	●/●	●	●	*2
F798	0798		Data7	0000~ FFFF	1/1	0	*1	●/●	●/●	●	●	*2
F799	0799		Data8	0000~ FFFF	1/1	0	*1	●/●	●/●	●	●	*2
F800	0800	Communication speed (2-wire RS485)		0:9600 bps 1:19200 bps 2:38400 bps	1/1	1	Enabled	●/●	●/●	●	●	6. 39. 1
F801	0801	Parity (common to 2-wire RS485 and 4-wire RS485)		0:Non parity 1:Even parity, 2:Odd parity	1/1	1	Enabled	●/●	●/●	●	●	6. 39. 1
F802	0802	Inverter number (common)		0~247	1/1	0	Enabled	●/●	●/●	●	●	6. 39. 1
F803	0803	Communications time-out time (common to 2-wire RS485 and 4-wire RS485)		0:OFF, 1~100 sec.	1/1	0	Enabled	●/●	●/●	●	●	6. 39. 1
F804	0804	Communications time-out action (common to 2-wire RS485 and 4-wire RS485)		0~8	1/1	8	Enabled	●/●	●/●	●	●	6. 39. 1
F805	0805	Send waiting time (2-wire RS485)		0.00:Default, 0.01~2.00 sec.	0.01/0.01	0.00	Enabled	●/●	●/●	●	●	6. 39. 1
F806	0806	Master/slave setting for inverter-to-inverter communications (2-wire RS485)		0:Slave (issues a 0Hz command if something goes wrong with the master) 1:Slave (continues operation if something goes wrong with the master) 2:Slave (trips for emergency stop if something goes wrong with the master) 3:Master (sends a frequency command) 4:Master (sends an output frequency) 5.Master (sends a torque command) 6.Master (sends an output torque command)	1/1	0	Enabled	●/●	●/●	●	●	6. 39. 1
F807	0807	Protocol selection (2-wire RS485)		0:TOSHIBA 1:MODBUS	1/1	0	Enabled	●/●	●/●	●	●	6. 39. 1

*1: This parameter is Read only.
*2:⇒This function is for Etherenet communication option.(planning)

[29] Communication function [2/4]

Sensorless vector/vector with sensor (●:Effective, -:Ineffective)

Title	Communication No.	Function	Adjustment range	Minimum setting unit (Panel/Communication)	Default setting	Write during running	Vector control		PM control	V/f Constant	Reference
							Speed control	Torque control			
F808	0808	Communication1 time-out condition selection	0:Disconnection detection 1:When communication mode enable 2:1+Driving operation	1/1	0	Enabled	●/●	●/●	●	●	*1
F810	0810	Frequency point selection	0:Disabled 1:2-wire RS485 2:4-wire RS485 3:Communication add option	1/1	0	Enabled	●/●	-	●	●	6. 39. 1
F811	0811	Point 1 setting	0-100%	1/1	0	Enabled *2	●/●	-	●	●	6. 39. 1
F812	0812	Point 1 frequency	0.0~FH Hz	0.1/0.01	0.0	Enabled *2	●/●	-	●	●	6. 39. 1
F813	0813	Point 2 setting	0~100%	1/1	100	Enabled *2	●/●	-	●	●	6. 39. 1
F814	0814	Point 2 frequency	0.0~FH Hz	0.1/0.01	60	Enabled *2	●/●	-	●	●	6. 39. 1
F815	0815	Address monitor (Modbus puls)	1~64	1/1	1	*5	●/●	●/●	●	●	*3
F816	0816	Command selection (Modbus puls)	0: Prohibit 1: Permit	1/1	0	Enabled	●/●	●/●	●	●	*3
F817	0817	Number of command (Modbus puls)	0~8	1/1	0	Enabled	●/●	●/●	●	●	*3
F818	0818	Number of monitors (Modbus puls)	0~8	1/1	0	Enabled	●/●	●/●	●	●	*3
F819	0819	Command station (Modbus puls)	0~64	1/1	0	Enabled	●/●	●/●	●	●	*3
F820	0820	Communication speed (4-wire RS485)	0:9600 bps 1:19200 bps 2:38400 bps	1/1	1	Enabled	●/●	●/●	●	●	6. 39. 1
F821	0821	Baud rate (Ethernet)	0:Automatic detection 1:10Mbps Full 2:10Mbps Half 3:100Mbps Full 4:100Mbps Half	1/1	0	Enabled	●/●	●/●	●	●	*4
F822	0822	Baud rate monitor right port (Ethernet)	0:Automatic detection 1:10Mbps Full 2:10Mbps Half 3:100Mbps Full 4:100Mbps Half	1/1	-	*5	●/●	●/●	●	●	*4
F823	0823	Baud rate monitor left port (Ethernet)	0:Automatic detection 1:10 Mbps Full 2:10Mbps Half 3:100Mbps Full 4:100Mbps Half	1/1	-	*5	●/●	●/●	●	●	*4
F824	0824	(Reservation)	0:- 1:- 2:- 3:-	1/1	0	Enabled	●/●	●/●	●	●	*4

*1: ⇒ For details, refer to Instruction Manual (E6581315) specified in Section 6.42. *2: Effective when a command value is sent by communication.
*3: ⇒ This function is for Modbus plus communication option (planning). *4: This function is for Etherenet communication option (planning).
*5: This parameter is read only.

[29] Communication function [3/4]

Sensorless vector/vector with sensor (●:Effective, -:Ineffective)

Title	Communication No.	Function	Adjustment range	Minimum setting unit (Panel/Communication)	Default setting	Write during running	Vector control		PM control	V/f Constant	Reference
							Speed control	Torque control			
F825	0825	Send waiting time (4-wire RS485)	0.00:Default, 0.01~2.00 sec.	0.01/0.01	0.00	Enabled	●/●	●/●	●	●	6. 39. 1
F826	0826	Inverter-to-inverter communication setting (4-wire RS485)	0:Slave (issues a 0Hz command if something goes wrong with the master) 1:Slave (continues operation if something goes wrong with the master) 2:Slave (trips for emergency stop if something goes wrong with the master) 3:Master (sends a frequency command) 4:Master (sends an output frequency) 5:Master (sends a torque command) 6:Master (sends an output torque command)	1/1	0	Enabled	●/●	●/●	●	●	6. 39. 1
F829	0829	Protocol selection (4-wire RS485)	0:TOSHIBA 1:MODBUS	1/1	0	Enabled	●/●	●/●	●	●	6. 39. 1
F830	0830	Communication option setting 1	0~7	1/1	0	Enabled	●/●	●/●	●	●	*1
F831	0831	Communication option setting 2	0000~FFFF	1/1	0000	Enabled	●/●	●/●	●	●	*1
F832	0832	Communication option setting 3	0000~FFFF	1/1	0000	Enabled	●/●	●/●	●	●	*1
F833	0833	Communication option setting 4	0000~FFFF	1/1	0000	Enabled	●/●	●/●	●	●	*1
F834	0834	Communication option setting 5	0000~FFFF	1/1	0000	Enabled	●/●	●/●	●	●	*1
F835	0835	Communication option setting 6	0000~FFFF	1/1	0000	Enabled	●/●	●/●	●	●	*1
F836	0836	Communication option setting 7	0000~FFFF	1/1	0000	Enabled	●/●	●/●	●	●	*1
F837	0837	Communication option setting 8	0000~FFFF	1/1	0	Enabled	●/●	●/●	●	●	*1
F838	0838	Communication option setting 9	0000~FFFF	1/1	0	Enabled	●/●	●/●	●	●	*1
F841	0841	Communication option setting 10	0000~FFFF	1/1	0000	Enabled	●/●	●/●	●	●	*1
F842	0842	Communication option setting 11	0000~FFFF	1/1	0000	Enabled	●/●	●/●	●	●	*1
F843	0843	Communication option setting 12	0000~FFFF	1/1	0000	Enabled	●/●	●/●	●	●	*1
F844	0844	Communication option setting 13	0000~FFFF	1/1	0000	Enabled	●/●	●/●	●	●	*1
F845	0845	Communication option setting 14	0000~FFFF	1/1	0000	Enabled	●/●	●/●	●	●	*1
F846	0846	Communication option setting 15	0000~FFFF	1/1	0000	Enabled	●/●	●/●	●	●	*1
F847	0847	Communication option setting 16	0000~FFFF	1/1	0	Enabled	●/●	●/●	●	●	*1
F848	0848	Communication option setting 17	0000~FFFF	1/1	0	Enabled	●/●	●/●	●	●	*1
F849	0849	Communication2 time-out condition selection	0:Disconnection detection 1:When communication mode enable 2:1+Driving operation	1/1	0	Enabled	●/●	●/●	●	●	*1
F850	0850	Disconnection detection extended time	0.0~100.0 sec.	0.1/0.1	0.0	Enabled	●/●	●/●	●	●	*1
F851	0851	Inverter operation at disconnection	0:Inverter stop, communication command, frequency mode open (by CMOd, FMOd) 1:None (continued operation) 2:Deceleration stop 3:Coast stop 4:Network error (Err8 trip) 5:Preset speed operation (by F852 setting)	1/1	0	Enabled	●/●	●/●	●	●	*1
F852	0852	Preset speed operation selection	0:None 1~15:Preset speed operation (by parameter setting)	1/1	0	Enabled	●/●	●/●	●	●	*1

*1: ⇒ For details, refer to Instruction Manual (E6581281, E6581343) specified in Section 6.42.

[29] Communication function [4/4]

Sensorless vector/vector with sensor (●:Effective, -:Ineffective)

Title	Communication No.	Function	Adjustment range	Minimum setting unit (Panel/Communication)	Default setting	Write during running	Vector control		PM control	V/f Constant	Reference
							Speed control	Torque control			
F853	0853	Communication option station address monitor	0~255	1/1	0	Enabled	●/●	●/●	●	●	*1
F854	0854	Communication option speed switch monitor DeviceNet/CC-Link	0~255	1/1	0	Enabled	●/●	●/●	●	●	*1
F856	0856	Motor pairs of poles for communication	1:2 Poles, 2:4 Poles 3:6 Poles, 4:8 Poles 5:10 Poles, 6:12 Poles 7:14 Poles, 8:16 Poles	1/1	2	Enabled	●/●	●/●	●	●	*1
F870	0870	Block write data 1	0:Disabled 1:Command information 1 2:Command information 2 3:Frequency command 4:Terminal board output data 5:Communication analog data 6:Rotational speed instruction	1/1	0	Enabled	●/●	●/●	●	●	6. 39. 1
F871	0871	Block write data 2	Ditto	1/1	0	Enabled	●/●	●/●	●	●	6. 39. 1
F875	0875	Block read data 1	0:Deselect 1:Status information 2:Output frequency 3:Output current 4:Output voltage 5:Alarm information 6:PID feedback value 7:Input terminal board monitor 8:Output terminal board monitor 9:VI/II terminal board monitor 10:RR/S4 terminal board monitor 11:RX terminal board monitor 12:Input voltage (DC detection) 13:Speed feedback frequency 14:Torque 15:MY monitor 1 16:MY monitor 2 17:MY monitor 3 18:MY monitor 4 19:Free notes 20:Rotational speed	1/1	0	Enabled	●/●	●/●	●	●	6. 39. 1
F876	0876	Block read data 2	Ditto	1/1	0	Enabled	●/●	●/●	●	●	6. 39. 1
F877	0877	Block read data 3	Ditto	1/1	0	Enabled	●/●	●/●	●	●	6. 39. 1
F878	0878	Block read data 4	Ditto	1/1	0	Enabled	●/●	●/●	●	●	6. 39. 1
F879	0879	Block read data 5	Ditto	1/1	0	Enabled	●/●	●/●	●	●	6. 39. 1
F880	0880	Free notes	0~FFFF	1/1	0	Enabled	●/●	●/●	●	●	6. 39. 1
F899	0899	Network option reset setting	0:None 1:Reset option circuit board and inverter	1/1	0	Disabled	●/●	●/●	●	●	*1

*1: ⇒ For details, refer to Instruction Manual (E6581281, E6581343, E6581476) specified in Section 6.42.

[30] My function [1/5]

Sensorless vector/vector with sensor (●:Effective, -:Ineffective)

Title	Communication No.	Function	Adjustment range	Minimum setting unit (Panel/Communication)	Default setting	Write during running	Vector control		PM control	V/f Constant	Reference
							Speed control	Torque control			
F900	0900	Input function target 11	Input terminal function number 0:Deselect 1:F terminal 2:R terminal 3:ST terminal 4:RES terminal 5:S1 terminal 6:S2 terminal 7:S3 terminal 8:RR/S4 terminal 9:LI1 terminal 10:LI2 terminal 11:LI3 terminal 12:LI4 terminal 13:LI5 terminal 14:LI6 terminal 15:LI7 terminal 16:LI8 terminal 17:B12 terminal 18:B13 terminal 19:B14 terminal 20:B15 terminal 21:Virtual input terminal 1 22:Virtual input terminal 2 23:Virtual input terminal 3 24:Virtual input terminal 4 25~32:Internal terminal 1~8 918~934:MY function number 1000~1255:Output selection number 2000~2099:FD00~FD99 3000~3099:FE00~FE99	1/1	0	Disabled	●/●	●/●	●	●	*1

*1: ⇒ For details, refer to Instruction Manual (E6581335) specified in Section 6.42.

[30] My function [2/5]

Sensorless vector/vector with sensor (●:Effective, -:Ineffective)

Title	Communication No.	Function	Adjustment range	Minimum setting unit (Panel/Communication)	Default setting	Write during running	Vector control		PM control	V/f Constant	Reference
							Speed control	Torque control			
F901	0901	Input function command 12	0:NOP (not operation) 1:ST (move) 2:STN 3:AND (logical product) 4:ANDN 5:OR (logical sum) 6:ORN 7:EQ (equal) 8:NE (not equal) 9:GT (greater than) 10:GE (greater or equal) 11:LT (less than) 12:LE (less or equal) 13:ASUB (absolute) 14:ON (on delay timer) 15:OFF (off delay timer) 16:COUNT 1 (counter 1) 17:COUNTR 2 (counter 2) 18:HOLD (hold) 19:SET (set) 20:RESET (reset) 21:CLR 22:CLRN	1/1	0	Disabled	●/●	●/●	●	●	*1
F902	0902	Input function target 12	Same as F900	1/1	0	Disabled	●/●	●/●	●	●	*1
F903	0903	Input function command 13	Same as F901	1/1	0	Disabled	●/●	●/●	●	●	*1
F904	0904	Input function target 13	Same as F900	1/1	0	Disabled	●/●	●/●	●	●	*1
F905	0905	Output function assigned object 1	Same as F900	1/1	0	Disabled	●/●	●/●	●	●	*1
F906	0906	Input function target 21	Same as F900	1/1	0	Disabled	●/●	●/●	●	●	*1
F907	0907	Input function command 22	Same as F901	1/1	0	Disabled	●/●	●/●	●	●	*1
F908	0908	Input function target 22	Same as F900	1/1	0	Disabled	●/●	●/●	●	●	*1
F909	0909	Input function command 23	Same as F901	1/1	0	Disabled	●/●	●/●	●	●	*1
F910	0910	Input function target 23	Same as F900	1/1	0	Disabled	●/●	●/●	●	●	*1
F911	0911	Output function assigned object 2	Same as F900	1/1	0	Disabled	●/●	●/●	●	●	*1
F912	0912	Input function target 31	Same as F900	1/1	0	Disabled	●/●	●/●	●	●	*1
F913	0913	Input function command 32	Same as F901	1/1	0	Disabled	●/●	●/●	●	●	*1
F914	0914	Input function target 32	Same as F900	1/1	0	Disabled	●/●	●/●	●	●	*1

*1: ⇒ For details, refer to Instruction Manual (E6581335) specified in Section 6.42.

[30] My function [3/5]

Sensorless vector/vector with sensor (●:Effective, -:Ineffective)

Title	Communication No.	Function	Adjustment range	Minimum setting unit (Panel/Communication)	Default setting	Write during running	Vector control		PM control	V/f Constant	Reference
							Speed control	Torque control			
F915	0915	Input function command 33	Same as F901	1/1	0	Disabled	●/●	●/●	●	●	*1
F916	0916	Input function target 33	Same as F900	1/1	0	Disabled	●/●	●/●	●	●	*1
F917	0917	Output function assigned object 3	Same as F900	1/1	0	Disabled	●/●	●/●	●	●	*1
F918	0918	My output percent data 1	0.00~200.0%	0.01/0.01	0.00	Enabled	●/●	●/●	●	●	*1
F919	0919	My output percent data 2	0.00~200.0%	0.01/0.01	0.00	Enabled	●/●	●/●	●	●	*1
F920	0920	My output percent data 3	0.00~200.0%	0.01/0.01	0.00	Enabled	●/●	●/●	●	●	*1
F921	0921	My output percent data 4	0.00~200.0%	0.01/0.01	0.00	Enabled	●/●	●/●	●	●	*1
F922	0922	My output percent data 5	0.00~200.0%	0.01/0.01	0.00	Enabled	●/●	●/●	●	●	*1
F923	0923	My output frequency data 1	0.0~500.0Hz	0.1/0.1	0.0	Enabled	●/●	●/●	●	●	*1
F924	0924	My output frequency data 2	0.0~500.0Hz	0.1/0.1	0.0	Enabled	●/●	●/●	●	●	*1
F925	0925	My output frequency data 3	0.0~500.0Hz	0.1/0.1	0.0	Enabled	●/●	●/●	●	●	*1
F926	0926	My output frequency data 4	0.0~500.0Hz	0.1/0.1	0.0	Enabled	●/●	●/●	●	●	*1
F927	0927	My output frequency data 5	0.0~500.0Hz	0.1/0.1	0.0	Enabled	●/●	●/●	●	●	*1
F928	0928	My output time data 1	0.01~600.0sec	0.01/0.01	0.01	Enabled	●/●	●/●	●	●	*1
F929	0929	My output time data 2	0.01~600.0sec	0.01/0.01	0.01	Enabled	●/●	●/●	●	●	*1
F930	0930	My output time data 3	0.01~600.0sec	0.01/0.01	0.01	Enabled	●/●	●/●	●	●	*1
F931	0931	My output time data 4	0.01~600.0sec	0.01/0.01	0.01	Enabled	●/●	●/●	●	●	*1
F932	0932	My output time data 5	0.01~600.0sec	0.01/0.01	0.01	Enabled	●/●	●/●	●	●	*1
F933	0933	No. of times of My output data 1	0~9999 times	1/1	0	Enabled	●/●	●/●	●	●	*1
F934	0934	No. of times of My output data 2	0~9999 times	1/1	0	Enabled	●/●	●/●	●	●	*1
F935	0935	Input function target 41	Same as F900	1/1	0	Enabled	●/●	●/●	●	●	*1
F936	0936	Input function command 42	Same as F901	1/1	0	Enabled	●/●	●/●	●	●	*1
F937	0937	Input function target 42	Same as F900	1/1	0	Enabled	●/●	●/●	●	●	*1
F938	0938	Input function command 43	Same as F901	1/1	0	Enabled	●/●	●/●	●	●	*1
F939	0939	Input function target 43	Same as F900	1/1	0	Enabled	●/●	●/●	●	●	*1
F940	0940	Output function assigned object 4	Same as F900	1/1	0	Enabled	●/●	●/●	●	●	*1
F941	0941	Input function target 51	Same as F900	1/1	0	Enabled	●/●	●/●	●	●	*1
F942	0942	Input function command 52	Same as F901	1/1	0	Enabled	●/●	●/●	●	●	*1
F943	0943	Input function target 52	Same as F900	1/1	0	Enabled	●/●	●/●	●	●	*1
F944	0944	Input function command 53	Same as F901	1/1	0	Enabled	●/●	●/●	●	●	*1
F945	0945	Input function target 53	Same as F900	1/1	0	Enabled	●/●	●/●	●	●	*1
F946	0946	Output function assigned object 5	Same as F900	1/1	0	Enabled	●/●	●/●	●	●	*1
F947	0947	Output function target 61	Same as F900	1/1	0	Enabled	●/●	●/●	●	●	*1

*1: ⇒ For details refer to the Instruction Manual (E6581335) for this parameter.

[30] My function [4/5]

Sensorless vector/vector with sensor (●:Effective, -:Ineffective)

Title	Communication No.	Function	Adjustment range	Minimum setting unit (Panel/Communication)	Default setting	Write during running	Vector control		PM control	V/f Constant	Reference
							Speed control	Torque control			
F948	0948	Input function command 62	Same as F901	1/1	0	Enabled	●/●	●/●	●	●	*1
F949	0949	Input function target 62	Same as F900	1/1	0	Enabled	●/●	●/●	●	●	*1
F950	0950	Input function command 63	Same as F901	1/1	0	Enabled	●/●	●/●	●	●	*1
F951	0951	Input function target 63	Same as F900	1/1	0	Enabled	●/●	●/●	●	●	*1
F952	0952	Output function assigned object 6	Same as F900	1/1	0	Enabled	●/●	●/●	●	●	*1
F953	0953	Input function target 71	Same as F900	1/1	0	Enabled	●/●	●/●	●	●	*1
F954	0954	Input function command 72	Same as F901	1/1	0	Enabled	●/●	●/●	●	●	*1
F955	0955	Input function target 72	Same as F900	1/1	0	Enabled	●/●	●/●	●	●	*1
F956	0956	Input function command 73	Same as F901	1/1	0	Enabled	●/●	●/●	●	●	*1
F957	0957	Input function target 73	Same as F900	1/1	0	Enabled	●/●	●/●	●	●	*1
F958	0958	Output function assigned object 7	Same as F900	1/1	0	Enabled	●/●	●/●	●	●	*1
F959	0959	Analog input function target 11	0:Disabled 1:VI/II 2:RR/S4 3:RX 4:Optional AI1+, Optional AI1- 5:Optional AI2 6:Internal memory1	1/1	0	Enabled	●/●	●/●	●	●	*1
F961	0961	Analog function assigned object 11	0:Disabled 1: Acceleration 2: Upper limit frequency (UL) 3:Acceleration multiplication factor 4:Deceleration multiplication factor 5: Manual torque boost (ub) 6:OC stall (F601) 7:Thermal protection (tHr) 8:Speed loop P gain (F460) 9:Drooping gain (F320) 10:PID P gain (F362)	1/1	0	Disabled	●/●	●/●	●	●	*1

*1: ⇒ For details, refer to Instruction Manual (E6581335) specified in Section 6.42.

[30] My function [5/5]

Sensorless vector/vector with sensor (●:Effective, -:Ineffective)

Title	Communication No.	Function	Adjustment range	Minimum setting unit (Panel/Communication)	Default setting	Write during running	Vector control: Speed control	Vector control: Torque control	PM control	V/f Constant	Reference
F962	0962	Analog input function target 21	0:Disabled 1:VI/II 2:RR/S4 3:RX 4:Optional AI1+, Optional AI1- 5:Optional AI2 6:Internal memory2	1/1	0	Enabled	●/●	●/●	●	●	*1
F964	0964	Analog function assigned object 21	0~10	1/1	0	Disabled	●/●	●/●	●	●	*1
F965	0965	Monitor output function target 11	2000~2099:FD00~FD99 3000~3099:FE00~FE99	1/1	2000	Enabled	●/●	●/●	●	●	*1
F966	0966	Monitor output function command 11	0:Normal monitor, 1:Max. value, 2:Min. value	1/1	0	Enabled	●/●	●/●	●	●	*1
F967	0967	Monitor output function target 21	2000~2099:FD00~FD99 3000~3099:FE00~FE99	1/1	2000	Enabled	●/●	●/●	●	●	*1
F968	0968	Monitor output function command 21	0:Normal monitor, 1:Max. value, 2:Min. value	1/1	0	Enabled	●/●	●/●	●	●	*1
F969	0969	Monitor output function target 31	2000~2099:FD00~FD99 3000~3099:FE00~FE99	1/1	2000	Enabled	●/●	●/●	●	●	*1
F970	0970	Monitor output function command 31	0:Normal monitor, 1:Max. value, 2:Min. value	1/1	0	Enabled	●/●	●/●	●	●	*1
F971	0971	Monitor output function target 41	2000~2099:FD00~FD99 3000~3099:FE00~FE99	1/1	2000	Enabled	●/●	●/●	●	●	*1
F972	0972	Monitor output function command 41	0:Normal monitor, 1:Max. value, 2:Min. value	1/1	0	Enabled	●/●	●/●	●	●	*1
F973	0973	Virtual input terminal selection 1	0~135 *2	1/1	0	Disabled	●/●	●/●	●	●	*1
F974	0974	Virtual input terminal selection 2	0~135 *2	1/1	0	Disabled	●/●	●/●	●	●	*1
F975	0975	Virtual input terminal selection 3	0~135 *2	1/1	0	Disabled	●/●	●/●	●	●	*1
F976	0976	Virtual input terminal selection 4	0~135 *2	1/1	0	Disabled	●/●	●/●	●	●	*1
F977	0977	My function selection	0:Disabled 1:My function + permission signal 2:My function always ON	1/1	0	Disabled	●/●	●/●	●	●	*1

*1: ⇒ For details, refer to Instruction Manual (E6581335) specified in Section 6.42. *2: ⇒ For the adjustment range, see the table on page K-41.

[31] Travenirse function

Sensorless vector/vector with sensor (●:Effective, -:Ineffective)

Title	Communication No.	Function	Adjustment range	Minimum setting unit (Panel/Communication)	Default setting	Write during running	Vector control: Speed control	Vector control: Torque control	PM control	V/f Constant	Reference
F980	0980	Traverse selection	0:Disabled 1:Enabled	1/1	0	Disabled	●/●	-	●	●	*1
F981	0981	Traverse acceleration time	0.1~120.0 sec.	0.1/0.1	25.0	Enabled	●/●	-	●	●	*1
F982	0982	Traverse deceleration time	0.1~120.0 sec.	0.1/0.1	25.0	Enabled	●/●	-	●	●	*1
F983	0983	Traverse step	0.0~25.0%	0.1/0.1	10.0	Enabled	●/●	-	●	●	*1
F984	0984	Traverse jump step	0.0~50.0%	0.1/0.1	10.0	Enabled	●/●	-	●	●	*1

*1: ⇒ For details, refer to Instruction Manual (E6581337) specified in Section 6.42.

[Contents of monitor displays]

Sensorless vector/vector with sensor (●: valid, -: invalid)

Communication No.	Function	Unit (Communication)	Monitor output selection	Trip retention	Meter output selection	Speed control	Torque control	PM control	V/f	Reference
-	Standard monitor	-	F710	* 1						8.2.1
Contents of status monitor display										
FE31	Pattern operation group selection	-	at a pattern operation	○	-	●/●	-	●	●	
FE32	Number of times to repeat current pattern	1	at a pattern operation	○	-	●/●	-	●	●	
FE33	Pattern operation - number of preset speeds	1	at a pattern operation	○	-	●/●	-	●	●	
FE34	Remaining time of current pattern operation	1	at a pattern operation	○	-	●/●	-	●	●	
FE01	Status (rotation direction)	-	Fixed	○	-	●/●	●/●	●	●	
-	Status monitor 1	-	F711	* 1						
-	Status monitor 2	-	F712	* 1						
-	Status monitor 3	-	F713	* 1						
-	Status monitor 4	-	F714	* 1						
-	Status monitor 5	-	F715	* 1						
-	Status monitor 6	-	F716	* 1						
-	Status monitor 7	-	F717	* 1						
-	Status monitor 8	-	F718	* 1						
FE00	Output frequency monitor	0.01Hz	when tripped	when tripped	-	●/●	●/●	●	●	
FE06	Input terminal information	-	Fixed	○	-	●/●	●/●	●	●	
-	Input terminal information (optional)	-	Fixed	○	-	●/●	●/●	●	●	
-	Input terminal information (optional)	-	Fixed	○	-	●/●	●/●	●	●	
FE07	Output terminal information	-	Fixed	○	-	●/●	●/●	●	●	
-	Output terminal information (optional)	-	Fixed	○	-	●/●	●/●	●	●	
FE08	CPU1 version	1	Fixed	×	-	●/●	●/●	●	●	
FE73	CPU2 version	-	Fixed	×	-	●/●	●/●	●	●	
FE10	Past trip 1	-	Fixed	×	-	●/●	●/●	●	●	
FE11	Past trip 2	-	Fixed	×	-	●/●	●/●	●	●	
FE12	Past trip 3	-	Fixed	×	-	●/●	●/●	●	●	
FE13	Past trip 4	-	Fixed	×	-	●/●	●/●	●	●	
FE79	Part replacement alarm information	-	Fixed	×	-	●/●	●/●	●	●	
FE14	Cumulative operation time	1h	Fixed	×	-	●/●	●/●	●	●	

*1: Status in a trip may not be held depending on selected function. Refer to next page; ⇒ [Monitor FM/AM/pulse output function selection].

[Monitor FM/AM/pulse output function selection (1/3)]

Sensorless vector/vector with sensor ●: valid, -: invalid)

FM/AM/pulse output		Monitor output		Function	Unit (Communication)	Trip retention	Speed control	Torque control	PM control	V/f	Reference
Option No.	Communication No.	Option No.	Communication No.								
0	FD00	0	FE00	Output frequency	0.01Hz	○	●/●	●/●	●	●	5.16 8.3
1	FD02	1	FE02	Frequency command value	0.01Hz	○	●/●	-	●	●	
2	FD03	2	FE03	Output current	0.01%	○	●/●	●/●	●	●	
3	FD04	3	FE04	Input voltage (DC detection)	0.01%	○	●/●	●/●	●	●	
4	FD05	4	FE05	Output voltage	0.01%	○	●/●	●/●	●	●	
5	FD15	5	FE15	Compensated frequency	0.01Hz	○	●/●	●/●	●	●	
6	FD16	6	FE16	Speed feedback (real-time value) *1	0.01Hz	○	-/●	-/●	-	-	
7	FD17	7	FE17	Speed feedback (1-second filter) *1	0.01Hz	○	-/●	-/●	-	-	
8	FD18	8	FE18	Torque	0.01%	○	●/●	●/●	●	●*2	
9	FD19	9	FE19	Torque command	0.01%	○	-	●/●	-	-	
11	FD20	11	FE20	Torque current	0.01%	○	●/●	●/●	-	●*2	
12	FD21	12	FE21	Exciting current	0.01%	○	●/●	●/●	-	●*2	
13	FD22	13	FE22	PID feedback value	0.01Hz	○	●/●	-	●	●	
14	FD23	14	FE23	Motor overload factor (OL2 data)	0.01%	○	●/●	●/●	●	●	
15	FD24	15	FE24	Inverter overload factor (OL1 data)	0.01%	○	●/●	●/●	●	●	
16	FD25	16	FE25	Regenerative braking resistance overload factor (OLr data)	1%	○	●/●	●/●	●	●	
17	FD28	17	FE28	Regenerative braking resistor load factor (% ED)	1%	○	●/●	●/●	●	●	
18	FD29	18	FE29	Input power	0.01kW	○	●/●	●/●	●	●	
19	FD30	19	FE30	Output power	0.01kW	○	●/●	●/●	●	●	
23	FE39	23	FE39	Optional AI2 input	0.01%	×	●/●	●/●	●	●	
24	FE35	24	FE35	RR/S4 input	0.01%	×	●/●	●/●	●	●	
25	FE36	25	FE36	VI/II input	0.01%	×	●/●	●/●	●	●	
26	FE37	26	FE37	RX input	0.01%	×	●/●	●/●	●	●	
27	FE38	27	FE38	Optional AI1 input	0.01%	×	●/●	●/●	●	●	
28	FE40	28	FE40	FM output	0.01	×	●/●	●/●	●	●	
29	FE41	29	FE41	AM output	0.01	×	●/●	●/●	●	●	
30	FE51	-	-	Fixed output 1	0.01%	×	●/●	●/●	●	●	
31	FA51 *3	-	-	Communication data output	1	×	●/●	●/●	●	●	
32	FE50	-	-	Fixed output 2	0.01%	×	●/●	●/●	●	●	
33	FE52	-	-	Fixed output 3	0.01%	×	●/●	●/●	●	●	
-	-	32	FE66	Attached to expansion I/O card 1 CPU version	-	×	●/●	●/●	●	●	
-	-	33	FE67	Attached to expansion I/O card 2 CPU version	-	×	●/●	●/●	●	●	

*1: Estimated speed is output if there is no PG feedback. If used as pulse input command with PG feedback option, frequency is displayed as in the PG feedback.
*2: Reference data
*3: Communication no. FA51 is used for FM, FA52 for AM, FA53 for MON1 and FA54 for MON2 and pulse output, respectively.
⇒ For details, refer to Section 5.16; [Terminal FM-related parameters].
⇒ For monitor indications, refer to Section 8.3; [Set up values of monitor indication parameters].

[Monitor FM/AM/pulse output function selection (2/3)]

Sensorless vector/vector with sensor (●: valid, -: invalid)

FM/AM/pulse output		Monitor output		Function	Unit (Communication)	Trip retention	Speed control	Torque control	PM control	V/f	Reference
Option No.	Communication No.	Option No.	Communication No.								
34	FE76	34	FE76	Integral input power	Depends on F749	×	●/●	●/●	●	●	
35	FE77	35	FE77	Integral output power	Depends on F749	×	●/●	●/●	●	●	
45	0006 *3 0671 *4	-	-	Gain display	1	-	●/●	●/●	●	●	
46	FE60	-	-	My function monitor 1 (Output of unsigned value)	1	×	●/●	●/●	●	●	
47	FE61	-	-	My function monitor 2 (Output of unsigned value)	1	×	●/●	●/●	●	●	
48	FE62	-	-	My function monitor 3 (Output of signed value) *2	1	×	●/●	●/●	●	●	
49	FE63	-	-	My function monitor 4 (Output of signed value) *2	1	×	●/●	●/●	●	●	
50	FD00	50	FE00	Signed output frequency *5	0.01Hz	○	●/●	●/●	●	●	
51	FD02	51	FE02	Signed frequency command value *5	0.01Hz	○	●/●	-	●	●	
52	FD15	52	FE15	Signed compensated frequency *5	0.01Hz	○	●/●	●/●	●	●	
53	FD16	53	FE16	Signed speed feedback (real-time value)*5	0.01Hz	○	-/●	-/●	-	-	
54	FD17	54	FE17	Signed speed feedback (1-second filter) *5	0.01Hz	○	-/●	-/●	-	-	5.16
55	FD18	55	FE18	Signed torque *5	0.01%	○	●/●	●/●	●	●*1	8.3
56	FD19	56	FE19	Signed torque command *5	0.01%	○	-	●/●	-	-	
58	FD20	58	FE20	Signed torque current *5	0.01%	○	●/●	●/●	-	● *1	
59	FD22	59	FE22	Signed PID feedback value *5	0.01	○	●/●	-	●	●	
60	FE37	60	FE37	Signed RX input *5	0.01%	×	●/●	●/●	●	●	
61	FE38	61	FE38	Signed optional AI1 input *5	0.01%	×	●/●	●/●	●	●	
62	FE51	-	-	Signed fixed output 1	-	×	●/●	●/●	●	●	
63	FE50	-	-	Signed fixed output 2	-	×	●/●	●/●	●	●	
64	FE52	-	-	Signed fixed output 3	-	×	●/●	●/●	●	●	
-	-	64	FD50	Light-load high-speed load torque monitor 1	0.01%	×	●/●	●/●	●	●	
-	-	65	FD51	Light-load high-speed load torque monitor 2	0.01%	×	●/●	●/●	●	●	
-	-	66	FE31	Pattern operation group number	0.1	×	●/●	-	●	●	
-	-	67	FE32	Remaining no. of cycles for which pattern operation is continued	1	×	●/●	-	●	●	
-	-	68	FE33	Pattern operation preset speed numbers	1	×	●/●	-	●	●	
-	-	69	FE34	Remaining time for which pattern operation is continued	0.1	×	●/●	-	●	●	

*1: Reference data *2: An absolute value is output for pulse train output of 48 and 49. *3: Communication no. for FM output *4: Communication no. for AM output

*5: If a negative value is specified, the negative sign "-" is displayed. When read through by communications device, the negative sign is affixed only FE18~FE20, FE37 and FE38 values.

⇒ For details, refer to Section 5.16; [Terminal FM-related parameters]. ⇒ For monitor indications, refer to Section 8.3; [Set up values of monitor indication parameters].

[Monitor FM/AM/pulse output function selection (3/3)]

Sensorless vector/vector with sensor (●: valid, -: invalid)

FM/AM/pulse output		Monitor output		Function	Unit (Communication)	Trip retention	Speed control	Torque control	PM control	V/f	Reference
Option No.	Communication No.	Option No.	Communication No.								
-	-	70	FE71	Rated voltage	0.1	×	●/●	●/●	●	●	
-	-	71	FE90	Rotational speed	1	×	●/●	●/●	●	●	
-	-	72	FA15	Communication option Reception counter	1	×	●/●	●/●	●	●	
-	-	73	FA16	Communication option Abnormal counter	1	×	●/●	●/●	●	●	
74	FE43	74	FE43	MON1	0.01%	×	●/●	●/●	●	●	5.16 8.3
75	FE44	75	FE44	MON2	0.01%	×	●/●	●/●	●	●	
76	FE56	76	FE56	RP	0.01%	×	●/●	●/●	●	●	
-	-	77	FD85	COUNT1	1	×	●/●	●/●	●	●	
-	-	78	FD86	COUNT2	1	×	●/●	●/●	●	●	
-	-	79	FD52	PID result frequency	0.1/0.01	×	●/●	-	●	●	
-	-	80	FE84	Synchronous speed Frequency command	0.1/0.01	○	●/●	-	●	●	

⇒ For details, refer to Section 5.16; [Terminal FM-related parameters].

⇒ For monitor indications, refer to Section 8.3; [Set up values of monitor indication parameters].

[Input terminal function setting (1/2)]

Sensorless vector/vector with sensor (●: valid, -: invalid)

Positive logic	Negative logic	Function	Speed control	Torque control	PM control	V/f	CMOd=1	F106=1	Reference
0	1	No function is assigned	●/●	●/●	●	●	-	-	7.2.1
2	3	F: Forward run command	●/●	●/●	●	●	●	-	
4	5	R: Reverse run command	●/●	●/●	●	●	●	-	
6	7	ST: Standby	●/●	●/●	●	●	*1	-	
8	9	RES: Reset	●/●	●/●	●	●	*2	-	
10	11	S1: Preset speed 1	●/●	-	●	●	●	-	
12	13	S2: Preset speed 2	●/●	-	●	●	●	-	
14	15	S3: Preset speed 3	●/●	-	●	●	●	-	
16	17	S4: Preset speed 4	●/●	-	●	●	●	-	
18	19	Jog run	●/●	-	●	●	●	●	
20	21	Emergency stop	●/●	●/●	●	●	*2	-	
22	23	DC braking	●/●	-	●	●	●	●	
24	25	Acceleration/deceleration switching 1	●/●	-	●	●	●	-	
26	27	Acceleration/deceleration switching 2	●/●	-	●	●	●	-	
28	29	V/f switching signal 1	●/●	-	●	●	●	-	
30	31	V/f switching signal 2	●/●	-	●	●	●	-	
32	33	Torque limit switching signal 1	●/●	●/●	●	●	●	-	
34	35	Torque limit switching signal 2	●/●	●/●	●	●	●	-	
36	37	PID control OFF selection	●/●	-	●	●	●	-	
38	39	Pattern operation selection 1	●/●	-	●	●	●	-	
40	41	Pattern operation selection 2	●/●	-	●	●	●	-	
42	43	Pattern operation continuation signal	●/●	-	●	●	●	-	
44	45	Pattern operation trigger signal	●/●	-	●	●	●	-	
46	47	External thermal error	●/●	-	●	●	●	-	
48	49	Communication priority cancel	●/●	-	●	●	●	-	
50	51	Holding of HD operation (stop of three-wire operation)	●/●	-	●	●	●	-	
52	53	PID differentiation/integration reset	●/●	-	●	●	●	-	
54	55	PID forward/reverse switching	●/●	-	●	●	●	-	
56	57	Forced continuous operation	●/●	-	●	●	●	-	
58	59	Specified speed operation	●/●	-	●	●	●	-	
60	61	Acceleration/deceleration suspend signal	●/●	-	●	●	●	-	
62	63	Power failure synchronized signal	●/●	-	●	●	●	-	
64	65	My function RUN signal	●/●	●/●	●	●	●	-	
66	67	Auto-tuning signal	●/●	-	●	●	●	-	
68	69	Speed gain switching	●/●	-	●	●	●	-	

*1: Valid any time

*2: Independent of CMOd, and all command are valid.

[Input terminal function setting (2/2)]

Sensorless vector/vector with sensor (●: valid, -: invalid)

Positive logic	Negative logic	Function	Speed control	Torque control	PM control	V/f	CMOd=1	F106=1	Reference
70	71	Servo lock signal	●/●	-	●	●	●	-	7.2.1
72	73	Simple positioning (positioning loop)	●/●	-	●	●	●	-	
74	75	Integrating wattmeter display clear	●/●	-	●	●	●	-	
76	77	Trace back trigger signal	●/●	-	●	●	●	-	
78	79	Light-load high-speed operation prohibitive signal	●/●	-	●	●	●	-	
86	87	Binary data write	●/●	●/●	●	●	●	-	
88	89	Up/Down frequency (up)*1	●/●	-	●	●	●	-	
90	91	Up/Down frequency (down)*1	●/●	-	●	●	●	-	
92	93	Up/Down frequency (clear)	●/●	-	●	●	●	-	
94	95	Dancer Correction OFF	●/●	-	●	●	●	-	
98	99	Forward/reverse selection	●/●	●/●	●	●	●	-	
100	101	Run/Stop command	●/●	●/●	●	●	●	-	
102	103	Commercial power/INV switching	●/●	-	●	●	●	-	
104	105	Frequency reference priority switching	●/●	-	●	●	●	-	
106	107	VI/II terminal priority	●/●	-	●	●	●	-	
108	109	Command terminal board priority	●/●	●/●	●	●	●	-	
110	111	Parameter editing enabling	●/●	●/●	●	●	●	-	
112	113	Speed/Torque switching	●/●	●/●	-	-	*2	-	
122	123	Rapidest deceleration command	●/●	-	●	●	●	-	
124	125	Preliminary excitation	●/●	●/●	●	●	●	-	
126	127	Braking request	●/●	-	●	●	●	-	
130	131	Brake answer back input	●/●	-	●	●	●	-	
134	135	Traverse permission signal	●/●	-	●	●	●	-	

*1: The deceleration/deceleration time depends on the ACC/dEC setting, unless switching between acceleration and deceleration is performed.

*2: Dependent on CMOd.

[Output terminal function setting (1/3)]

Sensorless vector/vector with sensor (●: valid, -: invalid)

Positive logic	Negative logic	Function	Speed control	Torque control	PM control	V/f	Reference
0	1	LL	●/●	●/●	●	●	7.2.2
2	3	UL	●/●	●/●	●	●	
4	5	LOW	●/●	●/●	●	●	
6	7	Acceleration/deceleration completion	●/●	-	●	●	
8	9	Specified speed arrival	●/●	●/●	●	●	
10	11	Failure FL (all trip)	●/●	●/●	●	●	
12	13	Failure FL (except for EF, OCL, EPHO and OL2)	●/●	●/●	●	●	
14	15	Overcurrent pre-alarm	●/●	●/●	●	●	
16	17	Inverter overload pre-alarm	●/●	●/●	●	●	
18	19	Motor overload pre-alarm	●/●	●/●	●	●	
20	21	Overheat pre-alarm	●/●	●/●	●	●	
22	23	Overvoltage pre-alarm	●/●	●/●	●	●	
24	25	Main circuit undervoltage alarm	●/●	●/●	●	●	
26	27	Low current alarm	●/●	●/●	●	●	
28	29	Overtorque alarm	●/●	●/●	●	●	
30	31	Braking resistor overload pre-alarm	●/●	●/●	●	●	
32	33	In emergency stop	●/●	●/●	●	●	
34	35	In course of retry	●/●	●/●	●	●	
36	37	Pattern operation switching output	●/●	-	●	●	
38	39	PID deviation limit	●/●	-	●	●	
40	41	Run/Stop	●/●	●/●	●	●	
42	43	Serious failure (OCA, OCL, EF, phase failure, etc.)	●/●	●/●	●	●	
44	45	Light failure (OL, OC1, 2, 3, OP)	●/●	●/●	●	●	
46	47	Commercial/INV switching output 1 (for inverter operation output)	●/●	-	●	●	
48	49	Commercial/INV switching output 2 (for commercial operation output)	●/●	-	●	●	
50	51	Cooling fan ON/OFF	●/●	●/●	●	●	
52	53	In Jog run	●/●	-	●	●	
54	55	Panel operation/terminal board operation switching	●/●	●/●	●	●	
56	57	Cumulative operation time alarm	●/●	●/●	●	●	
58	59	PROFIBUS/DeviceNet/CC-Link communication error	●/●	●/●	●	●	
60	61	Forward/reverse run	●/●	●/●	●	●	
62	63	Ready for operation 1	●/●	●/●	●	●	
64	65	Ready for operation 2	●/●	●/●	●	●	
68	69	Braking release signal	●/●	-	●	●	
70	71	In (pre-)alarm status	●/●	●/●	●	●	
72	73	Forward speed limit (torque control)	-	●/●	-	-	
74	75	Reverse speed limit (torque control)	-	●/●	-	-	

[Output terminal function setting (2/3)]

Sensorless vector/vector with sensor (●: valid, -: invalid)

Positive logic	Negative logic	Function	Speed control	Torque control	PM control	V/f	Reference
76	77	Inverter healthy output	●/●	●/●	●	●	7.2.2
78	79	RS485 communication error	●/●	●/●	●	●	
80	81	Error code output 1 (6-bit output)	●/●	●/●	●	●	
82	83	Error code output 2 (6-bit output)	●/●	●/●	●	●	
84	85	Error code output 3 (6-bit output)	●/●	●/●	●	●	
86	87	Error code output 4 (6-bit output)	●/●	●/●	●	●	
88	89	Error code output 5 (6-bit output)	●/●	●/●	●	●	
90	91	Error code output 6 (6-bit output)	●/●	●/●	●	●	
92	93	Designated data output 1 (7-bit output)	●/●	●/●	●	●	
94	95	Designated data output 2 (7-bit output)	●/●	●/●	●	●	
96	97	Designated data output 3 (7-bit output)	●/●	●/●	●	●	
98	99	Designated data output 4 (7-bit output)	●/●	●/●	●	●	
100	101	Designated data output 5 (7-bit output)	●/●	●/●	●	●	
102	103	Designated data output 6 (7-bit output)	●/●	●/●	●	●	
104	105	Designated data output 7 (7-bit output)	●/●	●/●	●	●	
106	107	Light load signal	●/●	-/-	●	●	
108	109	Heavy load signal	●/●	-/-	●	●	
110	111	Positive torque limit	●/●	●/●	●	●	
112	113	Negative torque limit	●/●	●/●	●	●	
114	115	Output for external rush suppression relay	●/●	●/●	●	●	
118	119	Completion of stop positioning (for simple positioning)	-/-	-/-	-	-	
120	121	L-STOP	●/●	●/●	●	●	
122	123	Power failure synchronized operation	●/●	●/●	●	●	
124	125	Traverse motion	●/●	●/●	●	●	
126	127	Traverse deceleration in progress	●/●	●/●	●	●	
128	129	Part replacement alarm	●/●	●/●	●	●	
130	131	Overtorque pre-alarm	●/●	●/●	●	●	
132	133	Operation frequency command 1/2 selection	●/●	●/●	●	●	
134	135	Failure FL (except emergency stop)	●/●	●/●	●	●	
164	165	Motor oscillation contro1 (VFA7 Compatibility)	●/●	-/-	●	●	
222	223	My function output 1	●/●	●/●	●	●	
224	225	My function output 2	●/●	●/●	●	●	
226	227	My function output 3	●/●	●/●	●	●	
228	229	My function output 4	●/●	●/●	●	●	
230	231	My function output 5	●/●	●/●	●	●	
232	233	My function output 6	●/●	●/●	●	●	
234	235	My function output 7	●/●	●/●	●	●	
236	237	My function output 8	●/●	●/●	●	●	
238	239	My function output 9	●/●	●/●	●	●	

[Output terminal function setting 3/3]

Sensorless vector/vector with sensor (●: valid, -: invalid)

Positive logic	Negative logic	Function	Speed control	Torque control	PM control	V/f	Reference
240	241	My function output 10	●/●	●/●	●	●	7.2.2
242	243	My function output 11	●/●	●/●	●	●	
244	245	My function output 12	●/●	●/●	●	●	
246	247	My function output 13	●/●	●/●	●	●	
248	249	My function output 14	●/●	●/●	●	●	
250	251	My function output 15	●/●	●/●	●	●	
252	253	My function output 16	●/●	●/●	●	●	
254	255	Always OFF (for terminal signal tests)	●/●	●/●	●	●	

Standard default settings classified by inverter model (capacity)

Inverter type	Torque boost ub F172 F176 F180	Base frequency voltage uL u F171 F175 F179	Acc/dec time ACC/dEC F500/F501 F510/F511 F514/F515	PWM Carrier frequency CF	Dynamic braking resistance Pbr	Allowable continuous braking resistance PbCP	Inverter side switching waiting time F356	Motor rated capacity F405	Motor rated current F406	Motor rated rotational speed F407 *1	Motor constant 1 (torque boost) F410	Motor constant 2 (no load current) F411	Motor constant 3 (leak inductance) F412	Motor constant 4 (rated slip) F413	Display unit selection for integral output power F749
VFAS1-2004PL	8.0	230	10.0	12.0	200.0	0.12	0.57	0.40	2.0	1680	7.8	61	120	6.67	0
VFAS1-2007PL	8.0	230	10.0	12.0	200.0	0.12	0.57	0.75	3.4	1690	7.3	54	100	6.11	0
VFAS1-2015PL	6.0	230	10.0	12.0	75.0	0.12	0.57	1.50	6.2	1690	7.1	45	70	6.11	0
VFAS1-2022PL	6.0	230	10.0	12.0	75.0	0.12	0.57	2.20	8.9	1680	5.9	41	70	6.67	0
VFAS1-2037PL	6.0	230	10.0	12.0	40.0	0.12	0.67	3.70	14.8	1690	4.9	36	80	6.11	1
VFAS1-2055PL	4.0	230	10.0	12.0	20.0	0.24	0.87	5.50	21.0	1730	3.9	34	70	3.89	1
VFAS1-2075PL	4.0	230	10.0	12.0	15.0	0.44	0.87	7.50	28.2	1730	3.4	33	70	3.89	1
VFAS1-2110PM	3.0	230	10.0	12.0	10.0	0.66	1.07	11.0	40.6	1730	2.8	27	60	3.89	1
VFAS1-2150PM	3.0	230	10.0	12.0	7.5	0.88	1.07	15.0	54.6	1730	2.5	27	60	3.89	1
VFAS1-2185PM	3.0	230	30.0	4.0	7.5	0.88	1.37	18.5	68.0	1750	2.6	27	70	2.78	1
VFAS1-2220PM	3.0	230	30.0	4.0	3.3	1.76	1.37	22.0	80.0	1750	2.4	27	70	2.78	1
VFAS1-2300PM	3.0	230	30.0	4.0	3.3	1.76	1.37	30.0	108.0	1745	2.2	26	70	3.06	1
VFAS1-2370PM	3.0	230	30.0	4.0	2.0	2.20	1.37	37.0	134.0	1750	1.8	26	70	2.78	2
VFAS1-2450PM	3.0	230	30.0	4.0	2.0	2.20	1.37	45.0	160.0	1750	1.7	26	60	2.78	2
VFAS1-2550P	3.0	230	30.0	2.5	2.0	2.20	1.87	55.0	196.0	1755	1.6	24	70	2.50	2
VFAS1-2750P	2.0	230	60.0	2.5	1.7	3.40	2.37	75.0	258.0	1775	1.5	28	50	1.39	2
VFAS1-4007PL	8.0	*2	10.0	12.0	200.0	0.12	0.57	0.75	1.7	1690	7.3	54	100	6.11	0
VFAS1-4015PL	6.0	*2	10.0	12.0	200.0	0.12	0.57	1.50	3.1	1690	7.1	45	60	6.11	0
VFAS1-4022PL	6.0	*2	10.0	12.0	200.0	0.12	0.57	2.20	4.5	1680	5.9	41	70	6.67	0
VFAS1-4037PL	6.0	*2	10.0	12.0	160.0	0.12	0.67	3.70	7.4	1690	4.9	36	70	6.11	1
VFAS1-4055PL	4.0	*2	10.0	12.0	80.0	0.24	0.87	5.50	10.5	1730	3.9	34	70	3.89	1
VFAS1-4075PL	4.0	*2	10.0	12.0	60.0	0.44	0.87	7.50	14.1	1730	3.4	33	70	3.89	1
VFAS1-4110PL	3.0	*2	10.0	12.0	40.0	0.66	1.07	11.0	20.3	1730	2.8	27	60	3.89	1
VFAS1-4150PL	3.0	*2	10.0	12.0	30.0	0.88	1.07	15.0	27.3	1730	2.5	27	60	3.89	1
VFAS1-4185PL	3.0	*2	30.0	4.0	30.0	0.88	1.37	18.5	34.0	1750	2.6	27	70	2.78	1
VFAS1-4220PL	3.0	*2	30.0	4.0	15.0	1.76	1.37	22.0	40.0	1750	2.4	27	70	2.78	1
VFAS1-4300PL	3.0	*2	30.0	4.0	15.0	1.76	1.37	30.0	54.0	1745	2.2	26	70	3.06	1
VFAS1-4370PL	3.0	*2	30.0	4.0	8.0	1.76	1.37	37.0	67.0	1750	1.8	27	70	2.78	2
VFAS1-4450PL	3.0	*2	30.0	4.0	8.0	1.76	1.37	45.0	80.0	1750	1.7	26	60	2.78	2
VFAS1-4550PL	3.0	*2	30.0	4.0	8.0	1.76	1.37	55.0	98.0	1755	1.6	24	70	2.50	2
VFAS1-4750PL	2.0	*2	60.0	4.0	8.0	1.76	1.37	75.0	129.0	1775	1.5	28	50	1.39	2
VFAS1-4900PC	2.0	*2	60.0	2.5	3.7	7.40	1.37	90.0	153.0	1775	1.3	26	50	1.39	2
VFAS1-4110KPC	2.0	*2	60.0	2.5	3.7	7.40	1.37	110.0	183.0	1775	1.5	21	30	1.39	2
VFAS1-4132KPC	2.0	*2	60.0	2.5	3.7	7.40	1.37	132.0	217.0	1765	0.7	20	40	1.94	2
VFAS1-4160KPC	1.5	*2	60.0	2.5	3.7	7.40	1.37	160.0	271.0	1765	0.6	20	40	1.94	2
VFAS1-4200KPC	1.5	*2	60.0	2.5	1.9	8.70	1.37	200.0	333.0	1765	0.6	20	40	1.94	2
VFAS1-4220KPC	1.5	*2	60.0	2.5	1.9	8.70	1.37	220.0	371.0	1765	0.6	20	40	1.94	2
VFAS1-4280KPC	1.0	*2	60.0	2.5	1.4	14.00	1.37	280.0	464.0	1765	0.6	20	40	1.94	2
VFAS1-4355KPC	1.0	*2	60.0	2.5	0.9	17.40	1.37	355.0	614.0	1765	0.6	20	30	1.94	3
VFAS1-4400KPC	1.0	*2	60.0	2.5	0.7	28.00	1.37	400.0	691.0	1765	0.6	20	30	1.94	3
VFAS1-4500KPC	0.5	*2	60.0	2.5	0.7	28.00	1.37	500.0	830.0	1765	0.6	20	30	1.94	3

*1: Factory default settings when the base frequency (uL) is set at 60Hz (50Hz) *2: Inverter with a model number ending with -WN, HN: 460 -WP: 400

12. Specifications

12.1 Models and their standard specifications

1) Standard specifications (small/medium capacity types)

Item		Specification													
Voltage class		200V class													
Applicable motor (kW)		0.4	0.75	1.5	2.2	3.7/4.0	5.5	7.5	11	15	18.5	22	30	37	45
Applicable motor (HP)		0.5	1	2	3	5	7.5	10	15	20	25	30	40	50	60
Rating	Type	VFAS1-													
	Form	2004PL	2007PL	2015PL	2022PL	2037PL	2055PL	2075PL	2110PM	2150PM	2185PM	2220PM	2300PM	2370PM	2450PM
	Output capacity (kVA) [Note 1]	1.1	1.8	3.0	4.2	6.7	10	13	21	25	29	34	46	55	67
	Output current (A) [Note 2]	3.0 (3.0)	4.8 (4.5)	8.0 (8.0)	11 (10.5)	17.5 (16.6)	27.5 (25.0)	33 (33)	54 (49)	66 (64)	75 (66)	88 (75)	120 (88)	144 (120)	176 (140)
	Output voltage	Three-phase 200V~240V (The maximum output voltage is equal to the input supply voltage.)													
	Overload current rating	150%-1 minute, 165%-2 sec.													
Electrical braking	Dynamic braking circuit	Built-in dynamic braking drive circuit													
	Dynamic braking resistor	An external braking resistor (optional) ⇒ Rating: Refer to 5.19.													
Power supply	Voltage-frequency	Three-phase 200~240V-50/60Hz [Note 3]													
	Allowable fluctuation	Voltage + 10% - 15% [Note 4] Frequency ±5%													
Protective method		IP20 Enclosed type (JEM1030)									IP00 Open type (JEM1030) [Note 5]				
Cooling method		Forced air-cooled													
Cooling fan noise (dBA)		43	43	43	55	55	56	58	60	60	60	60	64	64	64
Color		RAL7016													
EMC filter		Built-in									Basic filter (Not complies with the European EMC Directive)				
DC reactor		External DC reactor (option)									Built-in				

Item		Specification													
Voltage class		400V class													
Applicable motor (kW)		0.75	1.5	2.2	3.7/4.0	5.5	7.5	11	15	18.5	22	30	37	45	55	75
Applicable motor (HP)		1	2	3	5	7.5	10	15	20	25	30	40	50	60	75	100
Rating	Type	VFAS1-													
	Form	4007PL	4015PL	4022PL	4037PL	4055PL	4075PL	4110PL	4150PL	4185PL	4220PL	4300PL	4370PL	4450PL	4550PL	4750PL
	Output capacity (kVA) [Note 1]	1.8	3.1	4.4	8.0	11	13	21	25	31	37	50	60	72	88	122
	Output current (A) [Note 2]	2.3 (2.3)	4.1 (4.0)	5.8 (4.6)	10.5 (8.6)	14.3 (13)	17.6 (17)	27.7 (25)	33 (32)	41 (37)	48 (38)	66 (53)	79 (60)	94 (75)	116 (93)	160 (120)
	Output voltage	Three-phase 380V~480V (The maximum output voltage is equal to the input supply voltage.)													
	Overload current rating	150%-1 minute, 165%-2 sec.													
Electrical braking	Dynamic braking circuit	Built-in dynamic braking drive circuit													
	Dynamic braking resistor	An external braking resistor (optional) ⇒ Rating: Refer to 5.19.													
Power supply	Voltage-frequency	Three-phase 380~480V-50/60Hz [Note 3]													
	Allowable fluctuation	Voltage + 10% - 15% [Note 4] Frequency ±5%													
Protective method		IP20 Enclosed type (JEM1030)									IP00 Open type (JEM1030) [Note 5]				
Cooling method		Forced air-cooled													
Cooling fan noise (dBA)		43	43	43	55	56	56	58	60	60	60	64	64	64	64	64
Color		RAL7016													
EMC filter		Built-in													
DC reactor		External DC reactor (option)									Built-in				

Note 1: Capacity is calculated at 220V for the 200V models and at 440V for the 400V models.

Note 2: Rated output current when the PWM carrier frequency (parameter CF) is 4kHz or less.
The values between parentheses refer to rated output currents when set to 12kHz.
⇒ Refer to 1.4.4 "Current reduction curve" for details.

Note 3: If you are using a 200V-15kW or 400V-2.2kW inverter and the ambient temperature is 40°C or more, decrease the PWM carrier frequency to 8kHz. Setting F631 to 1 enables you to protect the overload caused by ambient temperature described in page A-23.
An external power supply backup available (optional) (Type: CPS002Z)

Note 4: ±10% when the inverter is used continuously (load of 100%).

Note 5: Models, 200V-18.5kW or more and 400V-22kW or more, do not have wiring port covers. They have large openings, but there is no space to bend the external cables inside the unit.

2) Standard specifications (large capacity types) [Note 1]

Item		Specification	
Voltage class		200V class	
Applicable motor (kW)		55	75
Applicable motor (HP)		75	100
Rating	Type	VFAS1-	
	Form	2550P	2750P
	Output capacity (kVA) [Note 2]	84	109
	Output current (A)	221	285
	Output voltage	Three-phase 200V~240V (The maximum output voltage is equal to the input supply voltage.)	
	Overload current rating	150%-1 minute, 165%-2 sec.	
Electrical braking	Dynamic braking circuit	Built-in dynamic braking drive circuit	
	Dynamic braking resistor	An external braking resistor (optional) ⇒ Rating: Refer to 5.19.	
Power supply	Voltage-frequency [Note 3]	Three-phase 200~240V-50/60Hz	
	Allowable fluctuation	Voltage + 10% - 15% [Note 4] Frequency ±5%	
Protective method		IP00 Open type (JEM1030) [Note 5]	
Cooling method		Forced air-cooled	
Cooling fan noise (dBA)		61	72
Color		RAL7016	
EMC filter		External filter (optional)	
DC reactor		Attached DC reactor	

Item		Specification									
Voltage class		400V class									
Applicable motor (kW)		90	110	132	160	200	220	280	355	400	500
Applicable motor (HP)		125	150	200	250	300	350	450	550	600	700
Rating	Type	VFAS1-									
	Form	4900PC	4110KPC	4132KPC	4160KPC	4200KPC	4220KPC	4280KPC	4355KPC	4400KPC	4500KPC
	Output capacity (kVA) [Note 2]	136	164	197	239	295	325	419	511	578	717
	Output current (A)	179	215	259	314	387	427	550	671	759	941
	Output voltage	Three-phase 380V~480V (The maximum output voltage is equal to the input supply voltage.)									
	Overload current rating	150%-1 minute, 165%-2 sec.									
Electrical braking	Dynamic braking circuit	Built-in dynamic braking drive circuit				External dynamic braking circuit (optional)					
	Dynamic braking resistor	An external braking resistor (optional) ⇒ Rating: Refer to 5.19.									
Power supply	Voltage-frequency [Note 3]	[Note 6]	Three-phase 380~440V-50Hz Three-phase 380~480V-60Hz								
	Allowable fluctuation	Voltage + 10% - 15% [Note 4] Frequency ±5%									
Protective method		IP00 Open type (JEM1030) [Note 5]									
Cooling method		Forced air-cooled									
Cooling fan noise (dBA)		61	72	73	73	76	76	76	76	76	78
Color		RAL7016									
EMC filter		Built-in									
DC reactor		Attached DC reactor									

Note 1: For 200V-55kW, 400V-90kW or larger model, be sure to install DC reactor.
However, this is unnecessary for DC input specifications.

Note 2: Capacity is calculated at 220V for the 200V models and at 440V for the 400V models.

Note 3: An external power supply backup available (optional) (Type: CSP002Z)

Note 4: ±10% when the inverter is used continuously (load of 100%).

Note 5: Models, 200V-18.5kW or more and 400V-22kW or more, do not have wiring port covers. They have large openings, but there is no space to bend the external cables inside the unit.

Note 6: Three-phase 380~480V-50/60Hz for 4900PC

3) Common specification

Item		Specification
Control specification	Control system	Sinusoidal PWM control
	Output voltage adjustment	Main circuit voltage feedback control. (Switchable between automatic adjustment/fix/control off)
	Output frequency range	Setting between 0.01 to 500Hz. Default max. frequency is set to 0.01 to 60Hz. Maximum frequency adjustment (30 to 500Hz)
	Minimum setting steps of frequency	0.01Hz: operation panel input (60Hz base), 0.03Hz: analog input (60Hz base, 11 bit/0 to 10Vdc)
	Frequency accuracy	Analog input: ±0.2% of the maximum output frequency (at 25±10°C) Digital input: ±0.01%±0.022Hz of the output frequency
	Voltage/frequency characteristics	V/f constant, square reduction torque control, automatic torque boost, vector calculation control, base frequency adjustment 1, 2, 3, and 4 (25 to 500Hz), V/f 5-point arbitrary setting, torque boost adjustment (0 to 30%), start frequency adjustment (0 to 10Hz), stop frequency adjustment (0 to 30Hz)
	Frequency setting signal	3kΩ potentiometer (possible to connect to 1 to 10kΩ-rated potentiometer) 0 to 10Vdc (input impedance Zin: 30kΩ) 0 to ±10Vdc (Zin: 22kΩ) 4 to 20mAdc (Zin:242Ω)
	Terminal board base frequency	The characteristic can be set arbitrarily by two-point setting. Compliant with 6 types of input; analog input (RR, VI/II, RX, AI1, AI2), and pulse input. (*AI1, AI2, pulse input: optional)
	Frequency jump	3 places. Setting of jump frequency and width.
	Upper and lower limit frequencies	Upper limit frequency: 0 to max. frequency, lower limit frequency: 0 to upper limit frequency
	PWM carrier frequency	200V-45kW or less, adjustable between 1.0 to 16kHz for 400V-75kW or less 200V-55kW or less, adjustable between 2.5 to 8kHz for 400V-90kW or more
	PID control	Adjustment of proportional gain, integral time, differential time and delay filter
	Torque control	Voltage command input specification: DC 0 to ±10V
Operation specifications	Acceleration/deceleration time	0.01 to 6000 sec. Selectable from among acceleration/deceleration. times 1, 2, 3 and 4. Automatic acceleration/deceleration function. S-pattern acceleration/deceleration 1 and 2 pattern adjustable.
	DC braking	Adjustment of braking start frequency (0 to 120Hz), braking (0 to 100%) and braking time (0 to 20 sec.). With emergency stop braking function and motor shaft fix control function.
	Forward run/reverse run [Note 1]	With F-CC closed to forward run, with R-CC closed to reverse run, with both closed to reverse run. With ST-CC opened to coast stop. Emergency stop by panel operation or terminal board.
	Jog run [Note 1]	Jog mode, if selected, allows jog operation from the operation panel Jog run operation by terminal board is possible by setting the parameters.
	Preset speed operation [Note 1]	By changing the combination of open/close between S1, S2, S3, RR/S4-CC, set frequency + 15-speed operation. Selectable between acceleration/deceleration time, torque limit and V/f by set frequency.
	Retry	Capable of restarting after a check of the main circuit elements in case the protective function is activated. Max. 10 times selectable arbitrarily. Waiting time adjustment (0 to 10 sec.)
	Soft stall	Automatic load reduction control at overloading. (Default: OFF)
	Cooling fan ON/OFF	The cooling fan will be stopped automatically to assure long life when unnecessary.
	Operation panel key operation ON/OFF control	Key prohibition selectable between STOP key only, MODE key only, etc. All key operations can be prohibited.
	Regenerative power ride-through control	Possible to keep the motor running using its regenerative energy in case of a momentary power failure. (Default: OFF)
	Auto-restart operation	Possible to restart the motor in coasting in accordance with its speed and direction. (Default: OFF)
	Simplified pattern operation	Possible to select each 8 patterns in 2 groups from 15-speed operation frequency. Max. 16 types of operation possible. Terminal board operation/repeat operation possible.
	Commercial inverter switching	Possible to switch operation by commercial power source or inverter
	Light-load high-speed operation	Increases the operating efficiency of the machine by increasing the rotational speed of the motor when it is operated under light load.
	Drooping function	When two or more inverters are used to operate a single load, this function prevents load from concentrating on one inverter due to unbalance.
	Override function	External input signal adjustment is possible to the operation frequency command value.
Protective function	Protective function	Stall prevention, current limit, overcurrent, overvoltage, short circuit on the load side, ground fault on the load side [Note 5], undervoltage, momentary power failure (15ms or more), non-stop control at momentary power failure, overload protection, arm overload at starting, overcurrent on the load side at starting, overcurrent and overload at dynamic braking resistance, overheat, emergency stop
	Electronic thermal characteristic	Switchable between standard motor/constant torque VF motor, adjustment of overload protection and stall prevention level.
	Reset	Reset by 1a contact closed (or 1b contact opened), or by operation panel. Or power source OFF/ON. This function is also used to save and clear trip records.

(Continued overleaf)

(Continued)

Item			Specification
Display function	4-digit and 7-segment LED	Alarms	Stall prevention during operation, overload limit, overload, undervoltage on power source side, DC circuit undervoltage, setting error, in retry, upper limit, lower limit.
		Causes of failures	Overcurrent, overvoltage, overheat, short circuit on the load side, ground fault on the load side, inverter overload, arm overcurrent at starting, overcurrent on the load side at starting, CPU error, EEPROM error, RAM error, ROM error, communication error, (dynamic braking resistor overcurrent/overload), (emergency stop), (undervoltage), (low current), (overtorque), (motor overload), (input phase failure), (output phase failure) The items in the parentheses are selectable.
		Monitoring function	Operation frequency, operation frequency command, forward run/reverse run, output current, DC voltage, output voltage, compensated frequency, terminal board input/output information, CPU version, past trip history, cumulative operation time, speed feedback, torque, torque command, torque current, exiting current, PID feedback value, motor overload factor, inverter overload factor, PBR overload factor, PBR load factor, input power, output power, peak output current, peak DC voltage, RR/S4 input, VI/II input, RX input, AI1 input, AI2 input, FM output, AM output, expansion I/O card option CPU version, integral input power, integral output power, communication option reception counter, communication option abnormal counter
		Free unit display	Display of optional units other than output frequency (motor speed, line speed, etc), current ampere/% switch, voltage volt/% switch
		Automatic edit function	Searches automatically parameters that are different from the standard default setting parameters. Easy to find changed parameters.
		User default setting	User parameter settings can be saved as default settings. Allows to reset the parameters to the user-defined parameter settings.
	LED	Charge display	Displays main circuit capacitor charging.
Input/output terminal input function			Possible to select positive logic or negative logic with programmable input/output terminal function menu. [Note 1] [Note 2] (Default setting: positive logic)
Sink/source switching			Possible to switch between minus common (CC) and plus common (P24) for control terminal. (Default setting: minus common (CC))
output signal	Failure detection signal		1c contact output (250Vac-2A-cosΦ=1, 250Vac-1A-cosΦ=0.4, 30Vdc-1A)
	Low speed/speed reach signal output [Note 2]		Open collector output (24Vdc, max. 50mA, output impedance: 33Ω)
	Upper/lower limit frequency signal output [Note 2]		Open collector output (24Vdc, max. 50mA, output impedance: 33Ω)
	Output for frequency meter/ Output for ammeter [Note 3]		Analog output. 1mAdc full-scale DC ammeter or 7.5Vdc-1mA voltmeter
	Pulse train frequency output		Open collector output (24Vdc, max. 50mA)
Communication function			RS-485 standard 2-channel equipped (connector: modular 8P) CC-Link, DeviceNet and PROFIBUS-DP are optional.
Environments	Use environments		Indoor use. Altitude: 3000m or less (current reduction necessary if 1000m or more.) Place not exposed to direct sunlight and free of corrosive and explosive gases.
	Ambient temperature		-10 to +60°C (Remove the upper cover if 40°C or more, max. 60°C) [Note 4]
	Storage temperature		-25 to +70°C
	Relative humidity		20 to 93% (free from condensation)
	Vibration		5.9m/s^2{0.6G} or less (10 to 55Hz) (Compliant with JIS C60068-2-6)

Note 1: 16 contact input terminals (of which 8 are options) are programmable contact input terminals, and they make it possible to arbitrarily select from 136 types of signals.

Note 2: Programmable ON/OFF output terminals make it possible to arbitrarily select from 150 types of signals.

Note 3: Programmable analog output terminals make it possible to arbitrarily select from 55 types of signals.

Note 4: When using inverters where the ambient temperature will rise above 50°C, remove the upper cover and operate each inverter at a current lower than the rated one.
(200V-55kW or lager and 400V-90kW or larger models dose not need remove the upper cover)

Note 5: This function protects inverters from overcurrent due to output circuit ground fault.

12.2 Outside dimensions and weight

■ Outside dimensions and weight

Voltage class	Applicable motor (kW)	Applicable motor (HP)	Inverter type	Dimensions (mm) W	H	D	W1	H1	W2	H2	H3	H4	Drawing	Approx. weight (kg)
200V	0.4	0.5	VFAS1-2004PL	130	230	152	114	220	-	-	-	-	A	3
	0.75	1	VFAS1-2007PL											
	1.5	2	VFAS1-2015PL											
	2.2	3	VFAS1-2022PL	155	260	164	138	249	-	-	-	-	B	4
	3.7/4.0	5	VFAS1-2037PL											
	5.5	7.5	VFAS1-2055PL	175	295	164	158	283	-	-	-	-	C	5.5
	7.5	10	VFAS1-2075PL	210	295	191	190	283	-	-	-	-	D	7.5
	11	15	VFAS1-2110PM	230	400	191	210	386	-	-	-	-	E	14
	15	20	VFAS1-2150PM											
	18.5	25	VFAS1-2185PM	240	420	212	206	403	-	-	-	-	F	21
	22	30	VFAS1-2220PM											
	30	40	VFAS1-2300PM	320	550	242	280	525	-	-	-	-	H	41
	37	50	VFAS1-2370PM											
	45	60	VFAS1-2450PM											
	55	75	VFAS1-2550P	310	680 (920)	370	250	650	320	75	150	30	J	59 (87)
	75	100	VFAS1-2750P	350	782 (1022)	370	298	758	360	72	150	30	K	72 (103)
400V	0.75	1	VFAS1-4007PL	130	230	152	114	220	-	-	-	-	A	3
	1.5	2	VFAS1-4015PL											
	2.2	3	VFAS1-4022PL											
	3.7/4.0	5	VFAS1-4037PL	155	260	164	138	249	-	-	-	-	B	4
	5.5	7.5	VFAS1-4055PL	175	295	164	158	283	-	-	-	-	C	5.5
	7.5	10	VFAS1-4075PL											
	11	15	VFAS1-4110PL	210	295	191	190	283	-	-	-	-	D	8
	15	20	VFAS1-4150PL	230	400	191	210	386	-	-	-	-	E	13
	18.5	25	VFAS1-4185PL											16
	22	30	VFAS1-4220PL	240	420	212	206	403	-	-	-	-	F	21
	30	40	VFAS1-4300PL	240	550	242	206	529	-	-	-	-	G	29
	37	50	VFAS1-4370PL											
	45	60	VFAS1-4450PL	320	630	290	280	605	-	-	-	-	I	48
	55	75	VFAS1-4550PL											
	75	100	VFAS1-4750PL											
	90	125	VFAS1-4900PC	310	(680 (920)	370	250	650	320	75	150	30	J	59 (89)
	110	150	VFAS1-4110KPC	350	782 (1022)	370	298	758	360	72	150	30	K	74 (108)
	132	200	VFAS1-4132KPC	330	950 (1190)	370	285	920	340	75	150	30	L	82 (118)
	160	250	VFAS1-4160KPC	430	950 (1190)	370	350	920	440	75	150	30	M	104 (161)
	200	300	VFAS1-4200KPC	585	950 (1190)	370	540	920	598	75	150	30	N	134 (194)
	220	350	VFAS1-4220KPC											136 (204)
	280	450	VFAS1-4280KPC											
	355	550	VFAS1-4355KPC	880	1150 (1390)	370	418	1120	890	75	150	30	O	260 (370)
	400	600	VFAS1-4400KPC											
	500	700	VFAS1-4500KPC	1108	1150 (1390)	370	533	1120	1120	75	150	30	P	330 (462)

Note: Value in ( ) includes attached DC reactor.

■ Outline drawing

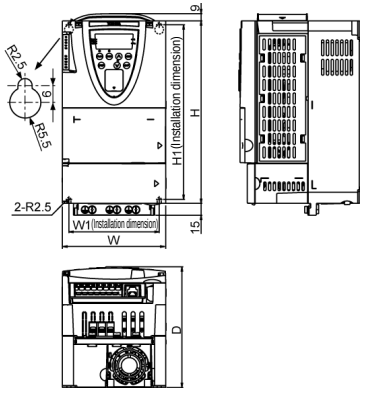

Fig. A

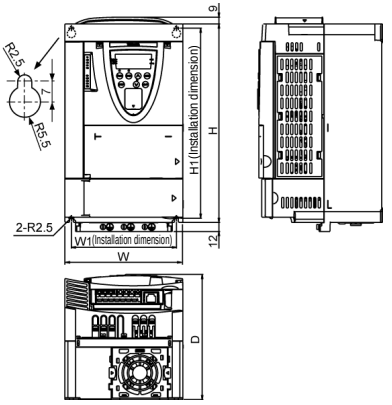

Fig. B

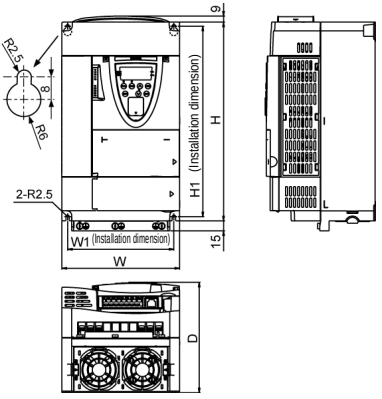

Fig. C

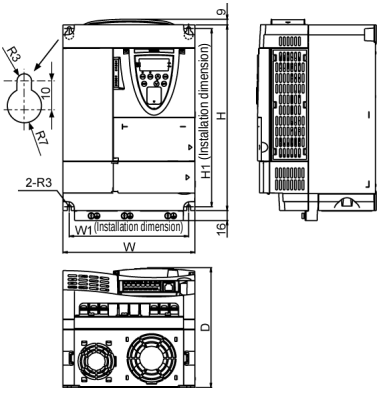

Fig.D

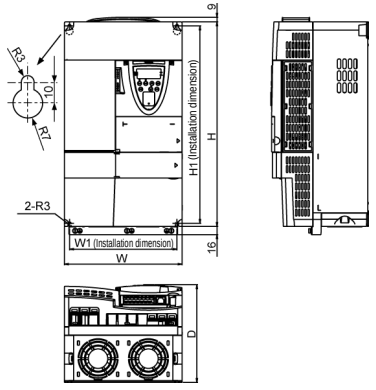

Fig. E

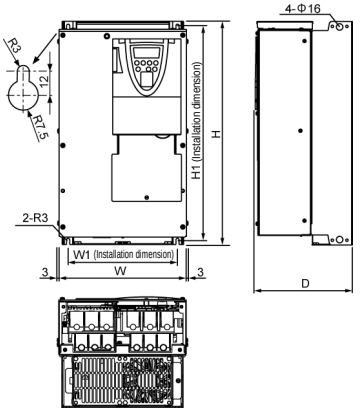

Fig. F

12

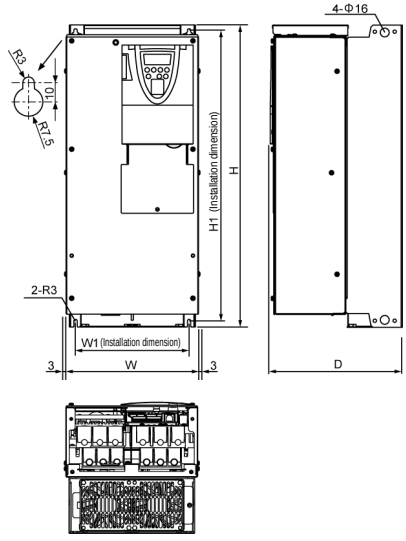

Fig. G

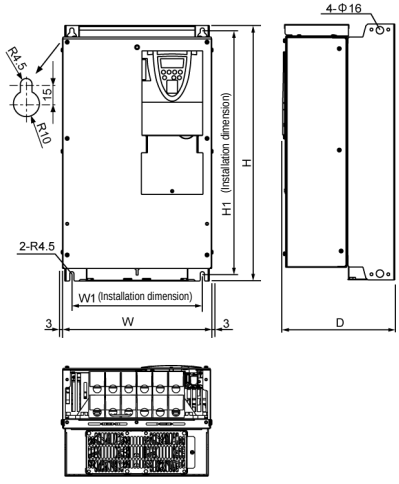

Fig. H

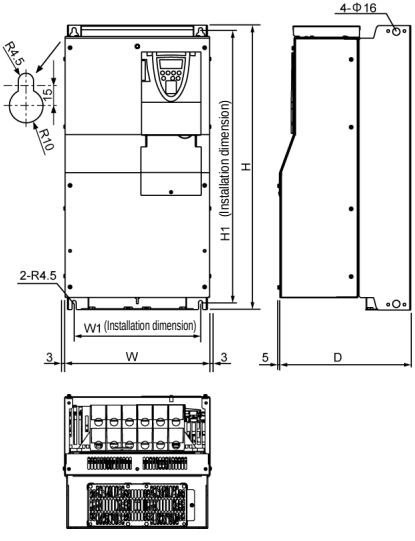

Fig. I

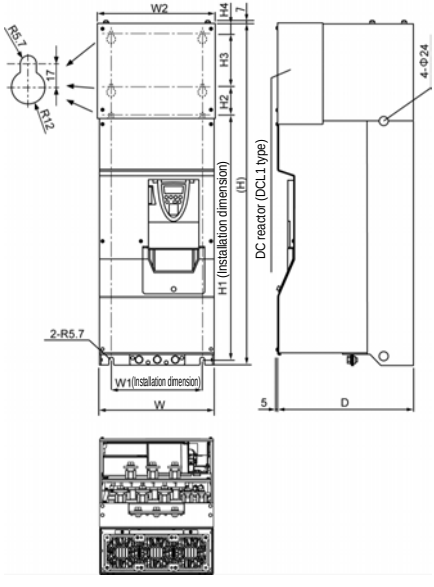

Fig. J

12

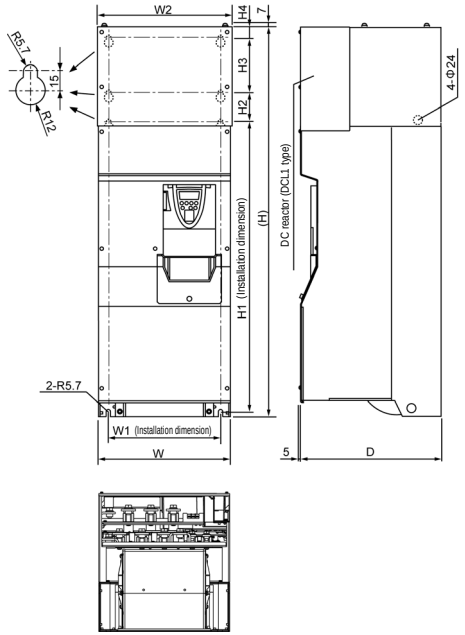

Fig. K

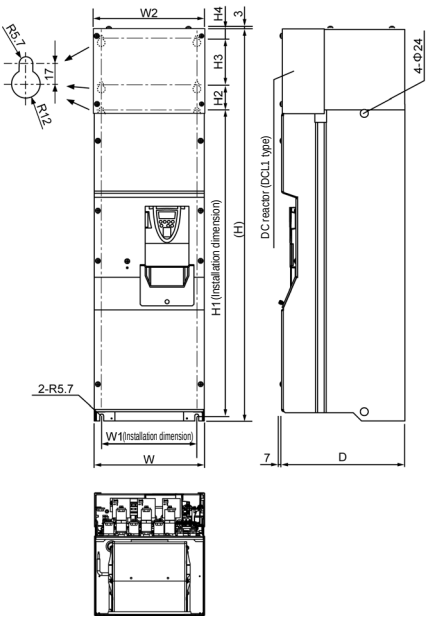

Fig. L

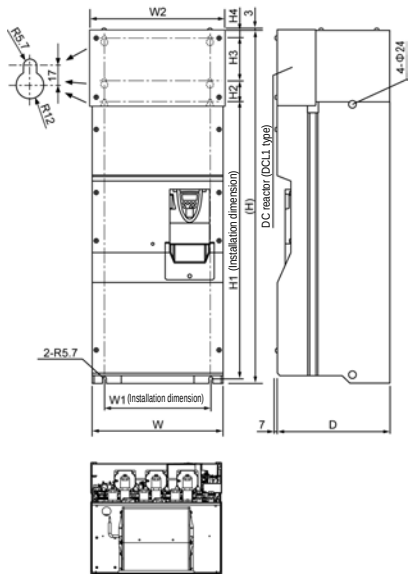

Fig. M

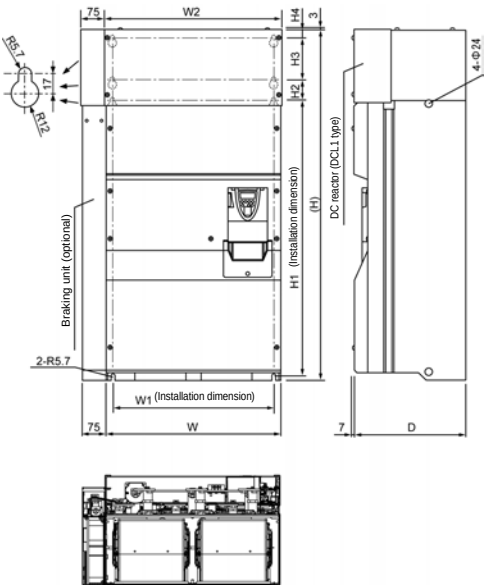

Fig. N

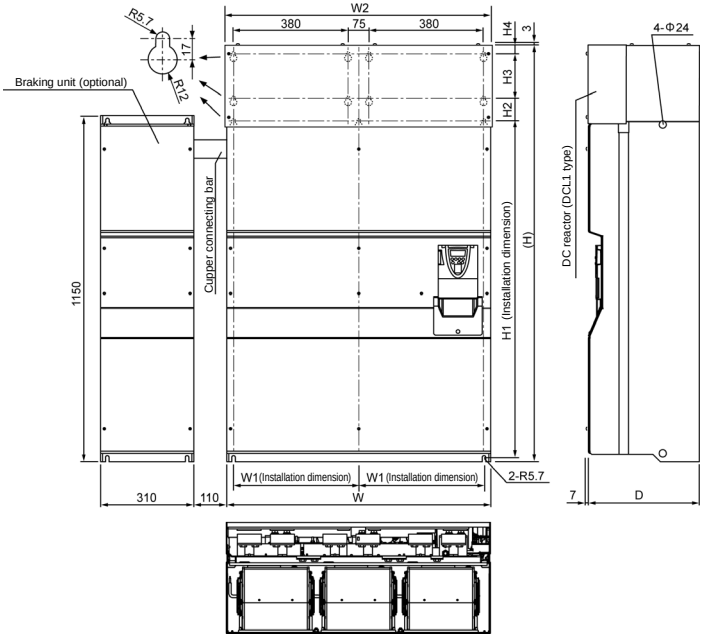
R5.7
17
R12
W2
380
75
380
H4
3
H3
H2
4-Φ24
Braking unit (optional)
Cupper connecting bar
1150
H1 (Installation dimension)
(H)
DC reactor (DCL1 type)
W1(Installation dimension)
W1(Installation dimension)
2-R5.7
310
110
W
7
D

Fig. O

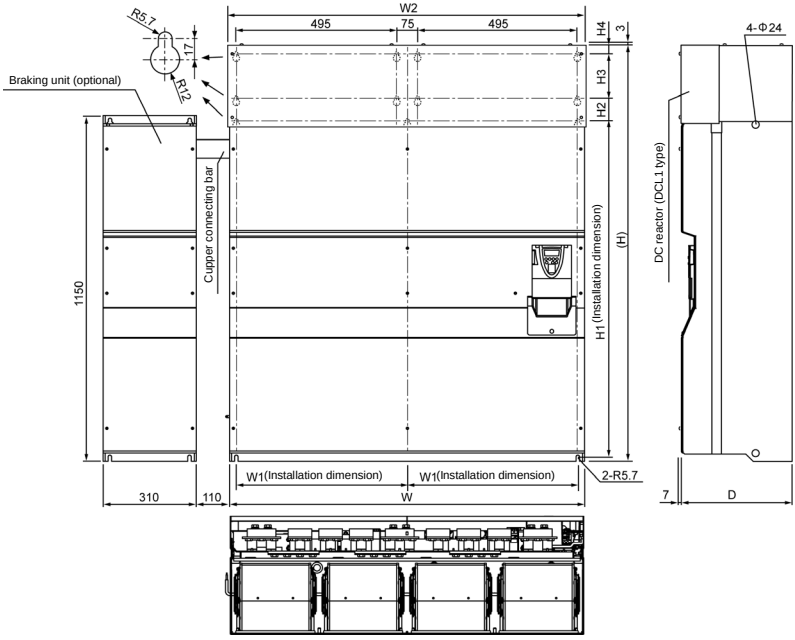
R5.7
17
R12
W2
495
75
495
H4
3
H3
H2
4-Φ24
Braking unit (optional)
Cupper connecting bar
1150
H1 (Installation dimension)
(H)
DC reactor (DCL1 type)
W1(Installation dimension)
W1(Installation dimension)
2-R5.7
310
110
W
7
D

Fig. P

13. Before making a service call - Trip information and remedies

13.1 Trip causes/warnings and remedies

When a problem arises, diagnose it in accordance with the following table.
If it is found that replacement of parts is required or the problem cannot be solved by any remedy described in the table, contact your supplier.

[Trip information]

Error code	Description	Possible causes	Remedies
OC1 *OC1P	Overcurrent during acceleration	•The acceleration time ACC is too short. •The V/f setting is improper. •A restart signal is input to the rotating motor after a momentary stop, etc. •A special motor (e.g. motor with a small impedance) is used. •Manual torque boost value (ub) is large.	•Increase the acceleration time ACC. •Check the V/f parameter setting. •Use UuS (Auto-restart) and UuC (Regenerative power ride-though control). •Increase the carrier frequency CF. •Decrease ub setting value. •Decrease F601 (stall prevention level) to 130 as a guide. •Increase CF (carrier frequency) setting value if it is set at lower value (2kHz or less).
OC2 *OC2P	Overcurrent during deceleration	•The deceleration time dEC is too short. (in deceleration)	•Increase the deceleration time dEC.
OC3 *OC3P	Overcurrent during fixed speed	•The load fluctuates abruptly. •The load is in an abnormal condition.	•Reduce the load fluctuation. •Check the load (operated machine).
[Note] OC1P, OC2P, OC3P originate from causes other than those mentioned above.		•A main circuit elements is defective. •Overheat protection is activated.	•Make a service call. •Check operation of cooling fan. •Check cooling fan control mode parameter F620.
*OCA1	U-phase arm short-circuit	•A main circuit elements is defective (U-phase).	•Make a service call.
*OCA2	V-phase arm short-circuit	•A main circuit elements is defective (V-phase).	•Make a service call.
*OCA3	W-phase arm short-circuit	•A main circuit elements is defective (W-phase).	•Make a service call.
OCL	Loaded side overcurrent at start time	•The insulation of the output main circuit or motor is defective. •The motor has too small impedance. •The drive circuit board in the inverter was damaged.	•Check the cables and wires for defective insulation. •Selection of short circuit detection at starting parameter F613. •If this error message appears when a motor is not connected to the inverter, the inverter itself may be faulty, so make a service call.
OCr	Dynamic braking element overcurrent (200V-55kW or larger, 400V-90kW or larger)	•PB-PC/+ circuit is shorted. •A resistor with resistance smaller than the minimum allowable resistance is connected. •Parameter Pb was set to 1 or 2 without connecting regenerative brake or with wire disconnected (with dynamic braking).	•Check the impedance wiring for the resistor, etc. •Make a service call. •Check if regenerative brake is connected. •If regenerative brake is not necessary, set parameter Pb to 0.
OH	Overheating	•The cooling fan does not rotate. •The ambient temperature is too high. •The vent is blocked up. •A heat generating device is installed close to the inverter. •The thermistor in the unit is disconnected.	•Restart the operation by resetting the inverter after it has cooled down enough. •The fan requires replacement if it does not rotate during operation. •Secure sufficient space around the inverter. •Do not place any heat generating device near the inverter. •Make a service call.
OH2	Thermal trip stop command from external device	•An input signal is impressed at control input terminal PTG for optional add-on cards. •A thermal trip command (input terminal function: 46 or 47) is issued by an external control device.	•The motor is overheated, so check whether the current flowing into the motor exceeds the rated current.

* In the event one of the error codes OC1P to OC3P and OCA1 to OCA3 appears, in which case a main circuit component has most probably failed, the only way to reset the inverter is to turn power off and back on.
(Continued overleaf)

(Continued)

Error code	Description	Possible causes	Remedies
OL1	Inverter overload	•Rapid acceleration is operated. •The DC braking amount is too large. •The V/f setting is improper. •A restart signal is input to the rotating motor after a momentary stop, etc. •The load is too large.	•Increase the acceleration time ACC. •Reduce the DC braking amount F251 and the DC braking time F252. •Check the V/f parameter setting. •Use UuS (Auto-restart) and UuC (Regenerative power ride-though control). •Use an inverter with a larger rating.
OL2	Motor overload	•The V/f parameter is improperly set. •The motor is locked up. •Low-speed operation is performed continuously. •An excessive load is applied to the motor during operation.	•Check the V/f parameter setting. •Check the load (operated machine). •Check the OLM setting and adjust F606 according to the sustainable overload in the motor low-speed range. •Reduce the DC braking amount F251 and the DC braking time F252.
OLr	Dynamic braking resistor overload	•Rapid deceleration is operated. •Dynamic braking is too large.	•Increase the deceleration time dEC. •Increase the capacity of dynamic braking resistor (wattage) and adjust PBR capacity parameter PbCP.
OP1	Overvoltage during acceleration	•The input voltage fluctuates abnormally. (1)The power supply has a capacity of 500kVA or more. (2)A power factor improvement capacitor is opened and closed. (3)A system using a thyrister is connected to the same power distribution line. •A restart signal is input to the rotating motor after a momentary stop, etc.	•Insert a suitable input reactor. •Use UuS (Auto-restart) and UuC (Regenerative power ride-though control).
OP2	Overvoltage during deceleration	•The deceleration time dEC is too short (regenerative energy is too large). •The dynamic braking resistor has a considerably large resistance. •Pb (Dynamic braking resistor) is OFF. Overvoltage limit operation F305 is OFF. •The input voltage fluctuates abnormally. (1)The power supply has a capacity of 500kVA or more. (2)A power factor improvement capacitor is opened and closed. (3)A system using a thyrister is connected to the same power distribution line.	•Increase the deceleration time dEC. •Install a dynamic braking resistor. •Decrease dynamic braking resistance. (Also reset the Pbr.) •Set dynamic braking mode parameter Pb properly. •Set overvoltage limit operation F305 properly. •Insert a suitable input reactor.
OP3	Overvoltage during fixed speed operation	•The input voltage fluctuates abnormally. (1)The power supply has a capacity of 500kVA or more. (2)A power factor improvement capacitor is opened and closed. (3)A system using a thyrister is connected to the same power distribution line. •The motor is in a regenerative state because the load causes the motor to run at a frequency higher than the inverter output frequency.	•Insert a suitable input reactor. •Install a dynamic braking resistor.
*Ot	Overtorque	•Overtorque reaches to a detection level during operation. •Stall prevention operation was performed continuously for a length of time longer than that set with F452.	•Check system error. •Check whether the motor is overloaded or the brake is engaged.
*UC	Low current	•The output current decreased to a low-current detection level during operation.	•Check the suitable detection level for the system (F611). •Make a service call if the setting is correct.
*UP1	Voltage drop in main circuit	•The input voltage (in the main circuit) is too low. •Momentary power failure occurs because undervoltage continues longer than undervoltage detection time F628.	•Check the input voltage. •To cope with a momentary stop due to undervoltage, enable UuC (Regenerative power ride-through control), UuS (auto-restart control), and F628 (Undervoltage detection time).

*Presence or absence of parameter trip can be selected.

(Continued overleaf)

(Continued)

Error code	Description	Possible causes	Remedies
E	Emergency stop	•Inverter is stopped by panel operation during automatic or remote operation. •A stop command (input terminal function: 20 or 21) is issued by an external control device.	•Reset the inverter.
EEP1	EEPROM error	•A data writing error occurs.	•Turn off the inverter, then turn it again. If it does not recover from the error, make a service call.
EEP2	Initial read error	•Some internal data is corrupted. •Power was turned off while tYP was being set.	•Make a service call. •Set tYP again. If the inverter does not recover from the error, make a service call.
EEP3	Initial read error	•Some internal data is corrupted.	•Make a service call.
EF1 EF2	Ground fault	•A current leaked from an output cable or the motor to ground.	•Check the cable and the motor for ground faults.
* EPH0	Output phase failure	•A phase failure occurred in the output line of the main circuit.	•Check the main circuit output line, motor, etc. for phase failure. •Select output phase failure detection parameter F605.
* EPH1	Input phase failure	•A phase failure occurred in the input line of the main circuit.	•Check the main circuit input line for phase failure.
Err2	Main unit RAM fault	•The control RAM is defective.	•Make a service call.
Err3	Main unit ROM fault	•The control ROM is defective.	•Make a service call.
Err4	CPU fault	•The control CPU is defective.	•Make a service call.
Err5	Interruption of operation command from external control device	•A normal communication was not possible for the time or longer set by F803.	•Check the remote control device, cables, etc.
Err6	Gate array fault	•Main gate array is defective.	•Make a service call.
Err7	Output current detector error	•The main output current detector is defective.	•Make a service call.
Err8	Optional unit fault	•An optional device has failed. (such as a communication device [add-on option])	•Check the connection of optional board(s). •Refer to instructions of options concerned specified in Section 6.42.
Etn	Tuning error	•The capacity of the motor connected is 2 notches or more smaller than the inverter capacity. •The motor connected is not a three-phase inductive motor. •Tuning is performed while the motor is running.	•Make sure that a motor is connected. •Make sure that the motor is at standstill. •Perform auto-tuning 1 again and if the error persists, perform tuning manually.
Etn1	Tuning detection error	• Some of F410,F411(*2), F412 and F413(*2) were not to be detected during auto tuning. •The capacity of the motor connected is 2 notches or more smaller than the inverter capacity. •The motor connected is not a three-phase inductive motor. •Tuning is performed while no motor is connected. •The cables connecting the inverter to the motor are too long; they are more than 30m in length. •Tuning is performed while the motor is running.	•Make sure that a motor is connected. •Make sure that the motor is at standstill. •Perform auto-tuning 1 again and if the error persists, perform tuning manually.
Etn2	Motor constant value error	• Some detection values of F410,F411(*2),F412 and F413(*2) were beyond the limits of normal value. •The capacity of the motor connected is 2 notches or more smaller than the inverter capacity. •The motor connected is not a three-phase inductive motor. •The cables connecting the inverter to the motor are too long; they are more than 30m in length. •Tuning is performed while the motor is running.	•Make sure that the motor is at standstill. •Perform auto-tuning 1 again and if the error persists, perform tuning manually.

*Presence or absence of parameter trip can be selected.

(Continued overleaf)

(Continued)

Error code	Description	Possible causes	Remedies
Etn3	Motor constant setting error	Some items indicated on the motor nameplate are not entered correctly. •Base frequency UL •Base frequency voltage 1 uLu •Motor rated capacity F405 •Motor rated current F406 •Motor rated speed F407	•Make sure that all items on the motor nameplate are entered correctly.
EtYP	Inverter type error	•Is circuit board (or main circuit/drive circuit board) replaced?	•When board has been replaced, input 6 for tYP.
E-10	Analog input terminal overvoltage	•Overrated voltage is applied to analog input.	•Apply voltage within the rated voltage.
E-11	Sequence error	•The signal from system is not inputted into input terminals. •The input terminal function (130, 131) is not set up. •A value other than 0.0 is specified for F630, although the brake answer function is not used.	•Please check if the sequence is normal or not. •Please set 130 or 131 as the input terminal to use. •Please set up 0.0, when you do not use system-supporting sequence.
E-12	Encoder error	•Disconnection of encoder circuit. •The encoder is not connected correctly.	•Check connection of encoder. Connect encoder correctly. •Check whether the setting of F376 matches the phase-A and phase-B connections of the encoder.
E-13	Speed error (Over speed)	•Speed error (Inverter error, Encoder error) •Over speed by overvoltage limit operation •Using braking function in not connect a motor	•Check the setting of F622 ~ F624 •Check connection of encoder. •In the case of overvoltage limit operation, install a dynamic braking resistor. •Operation in connect a motor.
E-18	Terminal input error	•Braking down of a wire for VI/II input signal. •Terminal circuit board comes off and falls •P24 overcurrent	•Check VI/II input signal. •Install the control terminal board to the inverter. •Check P24 terminal short circuit to CC or CCA.
E-19	Abnormal CPU2 communication	•An error arises during CPU2 communication.	•Make a service call.
E-20	V/f control error	• Output voltage / Output frequency ratio is too high compared to motor rating. • It was run in vector control mode (Pt=2,3,4,7 or 8) without setting parameters (Auto-tuning) concerning the motor. • Motor was in over-excitation state during deceleration. • Motor constant 1 (Torque boost) F410 is too large. • Motor was started under the brake closed.	• Set Base frequency voltage 1 uLu and Base frequency uL in accordance with motor rating. • When operating a motor in V/f control mode selection Pt=2,3,4,7 or 8, follow section 6.22, and then set the parameters (Auto-tuning) concerning the motor. • If the inverter is tripped during deceleration because of V/f control error (E-20) when F305 (Over voltage limit operation) is set to 2 or 3, decrease the value for F319 (Regenerative over-excitation upper limit).. • If the inverter is tripped during low frequency, decrease the value for F410. • If the inverter is tripped during braking, make the brake release timing early.
E-21	CPU1 fault	•A software error occurs in the control CPU.	•Make a service call.
E-22	Abnormal logic input voltage	•An abnormal voltage is applied to the control logic input terminal.	•Check the signal given to the logic connected with the input terminal.
E-23	Option 1 error	•Option card 1 is defective. (Installed option at lower side)	•Make a service call.
E-24	Option 2 error	•Option card 2 is defective. (Installed option at upper side)	•Make a service call.
E-25	Stop position retaining error	•A deviation error occurs during stop position retaining control. •The stop position adjustment range specified with F381 is too narrow. •Creeping speed is too fast.	•Check connection of encoder. •Adjust the proportional P gain F362. •Increase F381. •Lower the creeping speed.

(Continued overleaf)

(Continued)

E-26	Internal circuit error	•Motor control CPU is defective. •The drive circuit board in the inverter was damaged. •Power device is defective. •Using braking function in not Pt=2,3,4,7,8 mode	•Make a service call. •If the braking function is used, operate a motor in Pt=2,3,4,7,8 mode
E-29	Control power backup undervoltage error	•The control voltage between +SU and CC terminals is too low. •Control power is not supplied through +SU and CC terminals. •The parameter F647 is not set correctly.	•Check whether the voltage between +SU and CC terminals is DC20V or more. •Set F647 to 0 if a control power backup device is not connected to +SU and CC terminals. To reset the inverter that has been tripped because of this error, turn it off and then back on.
SOUt	Step-out (for PM motors only)	•The motor shaft is locked. •One output phase is open. •An impact load is applied.	•Unlock the motor shaft. •Check the interconnect cables between the inverter and the motor.

Note: Please contact us if you find any trips other than the above.

[Alarm] The following are messages only. No trip is developed.

Error code	Problem	Possible causes	Remedies
OFF	ST signal OFF	•ST terminal is in open-circuit.	•Check SW1 select •Close ST-CC circuit (Sink logic) •Close ST-P24/PLC circuit (Source logic)
COFF	Control power backup undervoltage	•The control voltage between +SU and CC terminals is too low. •Control power is not supplied through +SU and CC terminals. •The parameter F647 is not set correctly.	•Check whether the voltage between +SU and CC terminals is DC20V or more. •Set F647 to 0 if a control power backup device is not connected to +SU and CC terminals. In the event of a COFF error, the inverter will not be reset automatically even if the control voltage between +SU and CC terminals returns to its normal level. To reset the inverter, turn it off and then back it on.
nOFF	Undervoltage in main circuit	•The supply voltage between R, S and T is under voltage. •Trouble of rush current restraint circuit or DC circuit fuse.	•Measure the main circuit supply voltage. If the voltage is at a normal level, the inverter requires repairing. •Make a service call.
rtry	Retry	•The inverter is in the process of retry. •A momentary stop occurred.	•The inverter is normal if it restarts after several tens of seconds. The inverter restarts automatically. Be careful of the machine because it may suddenly restart.
Err1	Point setting alarm	•The frequency setting signals at points 1 and 2 are set too close to each other.	•Set the frequency setting signals at points 1 and 2 apart from each other.
E-17	Key failure alarm	•The same key is input continuously more than 20 seconds.	•Check the operation panel.
CLr	Clear enabling indication	•This message is displayed when pressing the STOP key while an error code is displayed. • Input terminal RES signal is ON during trip display.	•Press the STOP key again to clear the trip. •Turn off the input terminal RES signal.
EOFF	Emergency stop enabling indication	•The operation panel is used to stop the operation in automatic control or remote control mode.	•Press the STOP key for an emergency stop. To cancel the emergency stop, press any other key.
HI/LO	Setting error alarm An error code and data are displayed alternately twice each.	•An error is found in a setting when data is reading or writing.	•Check whether the setting is made correctly.
db	DC braking	•DC braking in process	•The message goes off in several tens of seconds if no problem occurs. [Note]
dbOn	Shaft fixing in control	•Motor shaft fixing control is in process.	•If the message disappears by stop command (ST-CC open), it is normal.
E1 E2 E3	Panel indication overflow	•The digit number of the item displayed, e.g., frequency, is in excess of the specified digit number. (Number of overflowing digits is indicated.)	•For indication of frequency, set multiplying rate (F702) lower. (Parameter setting that results in overflow is of course valid.)

(Continued overleaf)

(Continued)

In It	Parameters in the process of initialization	•Parameters are being initialized to default values.	•Normal if the message disappears after a while (several seconds to several tens of seconds).
Atn	In auto-tuning 1	•Auto-tuning 1 in process.	•Normal if it the message disappears after a few seconds.
LStP	Auto-stop because of continuous operation at the lower-limit frequency	•The automatic stop function of F256 is being performed.	•This function is deactivated when the command frequency becomes 0.2Hz or more higher than the lower-limit frequency (LL) or when a command for stopping operation is entered.
StOP	Momentary power failure slowdown stop prohibition function activated.	•The deceleration stop function of UuC (regenerative power ride-through control) is activated.	•To restart operation, reset the inverter or input an operation signal again.
HEAd/ End	Display of first/last data items	•First and last data in the AUH group.	•To exit from the group, press the MODE key.
tUn	During learning	•Learning for brake sequence operation or light-load high-speed operation is currently in progress.	•To cancel learning, suspend it and set learning parameters F329 to 0.
tUn1	Brake sequence learning error	•Braking operation is not performed normally. •The load is too heavy. •There are some operation errors.	•Brake signal output (68, 69) is not assigned to the control output terminal. •The brake function mode selection parameter (F341) is not set. •Learning is performed while the load is lifted
tUn2	Light-load high-speed learning operation error	•There are some errors in the operation for learning for light-load high-speed operation.	•Check whether the learning operation for light-load high-speed operation is performed correctly. ⇒ Refer to 6.16.
tUn3	Light-load high-speed learning overload error	•Learning operation for light-load high-speed operation is performed while the load is lifted. •Motor constants (uL, uLu, F405 to F413) are not entered correctly.	•Check the load. •Check the motor constant setting.
Undo	Key operation permitted temporarily	•This message appears if the ENTER key is pressed and held down for 5 seconds or more when key operation is prohibited by F737.	•When this message is displayed, all the keys are operational. To prohibit key operation again, turn off the inverter and then turn it back on.

Note: In the case of DC injection breaking ON/OFF function is selected for an input terminal; if "db" disappears as a result of open-circuit between the terminal and CC, it is normal.

[Pre-alarm display]

Error code	Description	Possible causes	Remedies
C	Overcurrent pre-alarm	Same as 0C (Overcurrent)	Same as 0C (Overcurrent)
P	Overvoltage pre-alarm Achieving PBR operation level	Same as 0P (Overvoltage) P blink while PBR is operating is not an error.	Same as 0P (Overvoltage) P blink while PBR is operating is not an error.
L	Overload pre-alarm	Same as 0L1 and 0L2 (Overload)	Same as 0L1 and 0L2 (Overload)
H	Overheat pre-alarm	Same as 0H (Overheat)	Same as 0H (Overheat)
t	Communication error	•Various transmission errors occur when computer is linked up with inverter system. •Various transmission errors occur in inverter to inverter communication (slave side). Time-out or trip in master side.	•For measures to correct various kinds of data transmission errors, refer to the instruction manual for the communications device used specified in Section 6.42. •Check the master inverter.

If two or more problems arise simultaneously, one of the following alarms appears and blinks.
CP, PL, LH, CPL, ..., CPLH
The blinking alarms C, P, L, H, t are displayed in this order from left to right.

13.2 Method of resetting causes of trip

Do not reset the inverter when tripped because of a failure or error before eliminating the cause. Resetting the tripped inverter before eliminating the problem causes it to trip again.

For recovering inverter from trip status,

(1) By turning off the power (Keep the inverter off until the LED turns off.)
⇒ Refer to Section 6.33.2 (inverter trip retention selection F602) for details.
(2) By means of an external signal (shorting RES and CC on control terminal board → release)
(3) By operation panel operation
(4) By means of a communication
⇒ For details, refer to the instruction manual for the communications device used specified in section 6.41.

reset it in one of the following ways.

To reset the inverter by operation panel operation, follow these steps.

1. Check whether the LED on the control panel indicates that tripping has occurred. If the occurrence of tripping is not indicated, press the MODE key to display it.
2. Press the STOP key and make sure that CLr is displayed.
3. Pressing the STOP key again will reset the inverter if the cause of the trip has already been eliminated.

When any overload function [OL1: Inverter overload, OL2: Motor overload, OLr: Dynamic braking resistor overload] is active, the inverter cannot be reset by inputting a reset signal from an external device or by operation panel operation before the virtual cooling time has passed.

Standard virtual cooling time … In case of OL1: for about 30 seconds after trip
In case of OL2: for about 120 seconds after trip
In case of OLr: for about 20 seconds after trip

Note: OL1 or OL2 can be reset during virtual cooling time if the CPU1 version is Ver.106 or successor. However, note that the inverter is in a state easy to trip during virtual cooling time.

If the inverter trips because of overheat (OH), reset it after a considerably long time enough for cooling it down completely, because overheat is detected based on its internal temperature.

- Caution -
For quickly recovering inverter from trip status, turn it off once and reset it. However, this measure is taken frequently, it may cause damage to the motor and other component units.

13.3 If the motor does not run while no trip message is displayed...

If the motor does not run while no trip message is displayed, follow these steps to track down the cause.

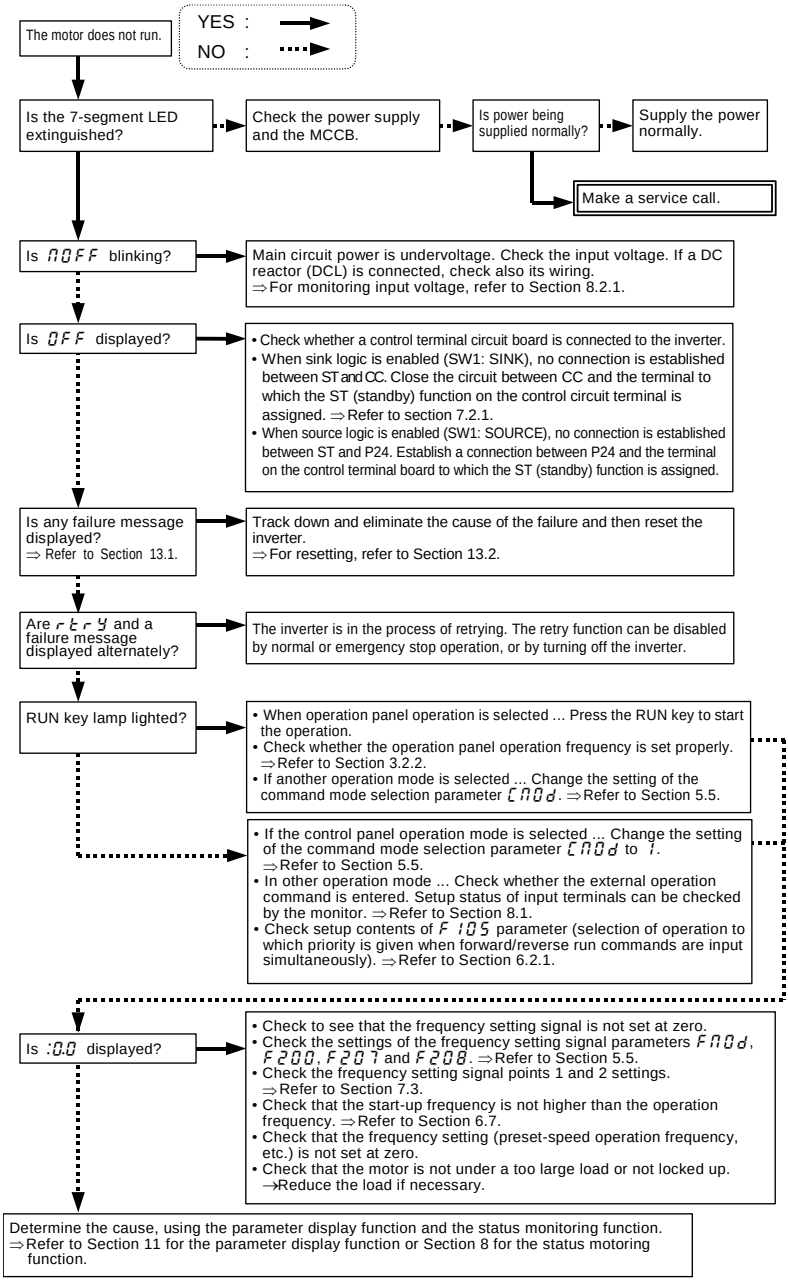

13.4 How to check other troubles

The following table provides a listing of other troubles, their possible causes and remedies.

Troubles	Causes and remedies
The motor runs in the wrong direction.	•Invert the phases of the output terminals U, V and W. •Invert the forward/reverse run signal terminals of the external input device. ⇒ Refer to Section 7.2, Assignment of functions to control terminals.
The motor runs but its speed does not change normally.	•The load is too heavy. •Reduce the load. •Soft stall function is activated. Switch off soft stall function. ⇒ Refer to Section 5.14. •The maximum frequency FH and the upper limit frequency UL are set too low. Increase the maximum frequency FH and the upper limit frequency UL. •The frequency setting signal is too low. Check the signal set value, circuit, cables, etc. •Check the setting characteristics (point 1 and point 2 settings) of the frequency setting signal parameters. ⇒ Refer to Section 7.3. •The base frequency voltage 1 uLu is too low. •If the motor runs at a low speed, check to see that the stall prevention function is activated because the torque boost amount is too large. Adjust the torque boost amount (ub) and the acceleration time (ACC). ⇒ Refer to Section 5.7 and 5.2.
The motor does not accelerate or decelerate smoothly.	•The acceleration time (ACC) or the deceleration time (dEC) is set too short. Increase the acceleration time (ACC) or the deceleration time (dEC).
A too large current flows into the motor.	•The load is too heavy. Reduce the load. •If the motor runs at a low speed, check whether the torque boost amount is too large. ⇒ Refer to Section 5.7.
The motor runs at a higher or lower speed than the specified one.	•The motor has improper voltage rating. Use a motor with a proper voltage rating. •The motor terminal voltage is too low. Check the setting of the base frequency voltage parameter (uLu). ⇒ Refer to Section 5.8. Change the cable for thicker one. •The reduction gear ratio, etc., is not set properly. Adjust the reduction gear ratio, etc. •The output frequency is not set correctly. Check the output frequency range. •Adjust the base frequency. ⇒ Refer to Section 5.8.
The motor speed varies during operation.	•The load is too heavy or too light. Reduce the load fluctuation. •The inverter or motor used does not have a rating large enough to drive the load. Use an inverter or motor with a rating large enough. •Check whether the frequency setting signal changes. •If the V/f control selection parameter Pt is set at 2 or larger (5 and 6 are removed.), check the vector control setting, operation conditions, etc. ⇒ Refer to Section 5.6.
Some or all of seven keys on operation panel don't work. Access to parameter results in failure. Parameter settings cannot be changed. Monitor (Display) is uncontrollable.	•Change panel operation prohibition parameter F730~F737. * Parameter is occasionally set for key operation prohibition mode. Cancel key operation prohibition mode according to the following procedure. **To cancel the setting, press and hold down the ENTER key for 5 seconds or more.** (1)If parameter write protect selection parameter F700 is set at 1 (prohibited), change the setting to 0 (allowed). (2)If there is an input terminal that is set for 110 (or 111) (parameter editing enabling) by input terminal function parameter, turn on the terminal.

How to cope with parameter setting-related problems

If you forget parameters which have been reset	•You can search for all reset parameters and change their settings. ⇒ Refer to Section 5.21 for details.
If you want to return all reset parameters to their respective default settings	•You can return all parameters which have been reset to their default settings. ⇒ Refer to Section 5.20 for details.

14. Inspection and maintenance

⚠ Warning

Mandatory	• The equipment must be inspected every day. If the equipment is not inspected and maintained, errors and malfunctions may not be discovered which could lead to accidents. • Before inspection, perform the following steps. (1) Shut off all input power to the inverter. (2) Wait at least 15 minutes and check to make sure that the charge lamp is no longer lit. (3) Use a tester that can measure DC voltages (800V DC or more), and check that the voltage to the DC main circuits (between PA/+ and PC/-) does not exceed 45V. Performing an inspection without carrying out these steps first could lead to electric shock.

Be sure to inspect the inverter regularly and periodically to prevent it from breaking down because of the environment of use, such as temperature, humidity, dust and vibration, or deterioration of its components with aging.

14.1 Regular inspection

Electronic parts are easily affected by heat. Install the Inverter in a cool, well-ventilated, dust-free area for achieving the original performance for a prolonged amount of time in demonstrate its original performance for a long time.
The purpose of regular inspections is to maintain the correct environment of use and to find any sign of failure or malfunction by comparing current operation data with past operation records.

Subject of inspection	Inspection procedure			Criteria for judgment
	Inspection item	Inspection cycle	Inspection method	
1.Indoor environment	1) Dust, temperature and gas 2) Drooping of water and other liquid 3) Room temperature	Occasionally Occasionally Occasionally	1) Visual check, check by means of a thermometer, smell check 2) Visual check 3) Check by means of a thermometer	1) Improve bad points. 2) Check for any trace of water condensation. 3) Max. temperature:60°C
2.Component parts and units	1) Vibration and noise	Occasionally	Tactile check of the cabinet	Is something unusual is found, open the door and check the transformer, reactors, contactors, relays, cooling fan, etc., inside. If necessary, stop the operation.
3.Operation data (output side)	1) Load current 2) Voltage (*)	Occasionally Occasionally	Moving-iron type AC ammeter Rectifier type AC voltmeter	To be within the rated current, voltage and temperature. No significant difference from data collected in a normal state.

*: The voltage measured may slightly vary from voltmeter to voltmeter. When measuring the voltage, always take readings from the same circuit tester or voltmeter.

■ Check points

1. Something unusual in the installation environment
2. Something unusual in the cooling system
3. Unusual vibration or noise
4. Overheating or discoloration
5. Unusual odor
6. Unusual motor vibration, noise or overheating
7. Adhesion or accumulation of foreign substances (conductive substances)

■ Cautions about cleaning

To clean the inverter, wipe dirt off only its surface with a soft cloth but do not try to remove dirt or stains from any other part. If stubborn stains persist, remove them by wiping gently with a cloth dampened with neutral detergent or ethanol.
Never use any of the chemicals in the table below; the use of any of them may damage or peel the coating away from molded parts (such as plastic covers and units) of the inverter.

Acetone	Ethylene chloride	Tetrachloroethane
Benzen	Ethyl acetate	Trichloroethylene
Chloroform	Glycerin	Xylene

14.2 Periodical inspection

Make a periodical inspection at intervals of 3 or 6 months depending on the operating conditions.

⚠ Warning	
Mandatory	• Before inspection, perform the following steps. (1) Shut off all input power to the inverter. (2) Wait at least 15 minutes and check to make sure that the charge lamp is no longer lit. (3) Use a tester that can measure DC voltages (800VDC or more), and check that the voltage to the DC main circuits (between PA/+ and PC/-) does not exceed 45V. Performing an inspection without carrying out these steps first could lead to electric shock.
Prohibited	• Never replace any part. This could be a cause of electric shock, fire and bodily injury. To replace parts, call the local sales agency.

■ Check items

1. Check to see if all screwed terminals are tightened firmly. If any screw is found loose, tighten it again with a screwdriver.
2. Check to see if all caulked terminals are fixed properly. Check them visually to see that there is no trace of overheating around any of them.
3. Check all cables and wires for damage. Check them visually.
4. Clean up dust and soil. With a vacuum cleaner, remove dirt and dust. When cleaning, clean the vents and the printed circuit boards. Always keep them clean to prevent a damage due to dirt or dust.
5. If no power is supplied to the inverter for a long time, the performance of its large-capacity electrolytic capacitor declines. When leaving the inverter unused for a long time, supply it with electricity once every two years, for 5 hours or more each, to check the operation of the inverter. Supply electricity for at least 5 hours with the motor disconnected. It is advisable not to supply the commercial power directly to the inverter but to gradually increase the power supply voltage with a transformer.
6. If insulation test is needed, conduct it for the main circuit terminal board using a 500V insulation resistance tester only. Never conduct an insulation test on control terminals other than terminals on the printed circuit board or on control terminals. When testing the motor for insulation performance, separate it from the inverter in advance by disconnecting the cables from the inverter output terminals U, V and W. When conducting an insulation test on peripheral circuits other than the motor circuit, disconnect all cables from the inverter so that no voltage is applied to the inverter during the test.

Note: Before an insulation test, always disconnect all cables from the main circuit terminal board and test the inverter separately from other equipment.

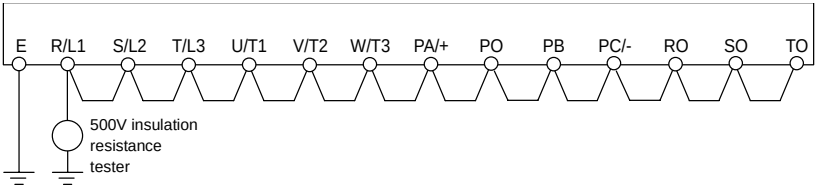

7. Never test the inverter for pressure. A pressure test may cause damage to its components.
8. Voltage and temperature check

   Recommended voltmeter

   Input side ... Moving-iron type voltmeter ( )

   Output side ... Rectifier type voltmeter ( )

   It will be very helpful for detecting a defect if you always measure and record the ambient temperature before, during and after the operation.

14

■ Replacement of expendable parts

The inverter is composed of a large number of electronic parts including semiconductor devices. The following parts deteriorate with the passage of time because of their composition or physical properties. The use of aged or deteriorated parts leads to degradation in the performance or a breakdown of the inverter. To avoid such trouble, the inverter should be checked periodically.

Note: Generally, the life of a part depends on the ambient temperature and the conditions of use. The life spans listed below are applicable to parts when used under normal environmental conditions.

1) Cooling fan

The fan, which cools down heat-generating parts, has a service life of about 30,000 hours (about 7 years) (average ambient temperature: 40°C, operation time: 12 hours per day). The fan also needs to be replaced if it makes a noise or vibrates abnormally.

Remove the portion A and then portion B in the following figure to remove the cooling fan.

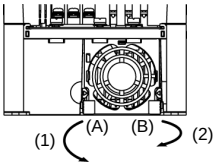

2) Smoothing capacitor

The smoothing aluminum electrolytic capacitor in the main circuit DC section degrades in performance because of ripple currents, etc. The smoothing aluminum electrolytic capacitor in the main circuit DC section degrades in performance because of ripple currents, etc. It becomes necessary to replace the capacitor after it is used for about 5 years under normal conditions (average ambient temperature: 40°C, load factor: not more than 80%, operation time: 12 hours per day). For the inverter that applicable motor output is 15kW (200V)-18.5kW (400V) or less, replace the capacitor together with the printed circuit board.

<Criteria for appearance check>

- Absence of liquid leak
- Safety valve in the depressed position
- Measurement of electrostatic capacitance and insulation resistance

Note: When it becomes necessary to replace expendable parts, contact your supplier. For safety's sake, never replace any part on your own.

By checking the cumulative operating time and the part replacement alarm information, you can get a rough idea of when each part should be replaced. For the replacement of parts, contact the service network or your supplier. (Operation hours can be known by alarm output, if it is set. For more details, refer to Section 6.33.12.)

■ Standard replacement cycles of principal parts

The table below provides a listing of the replacement cycles of parts when used under normal conditions (average ambient temperature: 40°C, load factor: not more than 80%, operation time: 12 hours per day). The replacement cycle of each part does not mean its service life but the number of years over which its failure rate does not increase significantly.

Part name		Standard replacement cycle	Replacement mode and others
Cooling fan	(200V/55kW models and 400V/90kW models or smaller)	5 years	Replacement with a new one
	(200V/75kW models and 400V/110kW models or larger)	5 years (Inside air cooling fan)	Replacement with a new one
		10 years (Outside air cooling fan)	
Smoothing capacitor		5 years	Replace with a new one (depending on the check results)
Circuit breaker and relays		-	Whether to replace or not depends on the check results
Aluminum capacitor on printed circuit board		5 years	Replace with a new circuit board (depending on the check results)

Note: The life of a part greatly varies depending on the environment of use. Do not install in any location where there are large amounts of dust, metallic fragments and oil mist.

14.3 Making a call for servicing

For the Toshiba service network, refer to the back cover of this instruction manual. If defective conditions are encountered, please contact the Toshiba service section in charge via your Toshiba dealer.
When making a call for servicing, please inform us of the contents of the rating label on the right panel of the inverter, the presence or absence of optional devices, etc., in addition to the details of the failure.

14.4 Keeping the inverter in storage

Take the following precautions when keeping the inverter in storage temporarily or for a long period of time.

1. Store the inverter in a well-ventilated place away from heat, damp, dust and metal powder.
   (storage temperature:-25~+70°C)

2. If no power is supplied to the inverter for a long time, the performance of its large-capacity electrolytic capacitor declines.
   When leaving the inverter unused for a long time, supply it with electricity once every two years, for 5 hours or more each, to recover the performance of the large-capacity electrolytic capacitor. And also check the function of the inverter. It is advisable not to supply the commercial power directly to the inverter but to gradually increase the power supply voltage with a transformer, etc.

15. Warranty

Any part of the inverter that proves defective will be repaired and adjusted free of charge under the following conditions:

1. This warranty applies only to the inverter main unit.
2. Any part of the inverter which fails or is damaged under normal use within twelve months from the date of delivery shall be repaired free of charge.
3. For the following kinds of failure or damage, the repair cost shall be borne by the customer even within the warranty period.
   - Failure or damage caused by improper or incorrect use or handling, or unauthorized repair or modification of the inverter
   - Failure or damage caused by the inverter falling or an accident during transportation after the purchase
   - Failure or damage caused by fire, salty water or wind, corrosive gas, earthquake, storm or flood, lightning, abnormal voltage supply, or other natural disasters
   - Failure or damage caused by the use of the inverter for any purpose or application other than the intended one
4. All expenses incurred by Toshiba for on-site services shall be charged to the customer, unless a service contract is signed beforehand between the customer and Toshiba, in which case the service contract has priority over this warranty.

16. Disposal of the inverter

⚠ Warning	
Mandatory	• For safety's sake, do not dispose of the disused inverter yourself but ask an industrial waste disposal agent (*). If the collection, transport and disposal of industrial waste is done by someone who is not licensed for that job, it is a punishable violation of the law. (Laws in regard to cleaning and processing of waste materials) (*) Persons who specialize in the processing of waste and known as “industrial waste product collectors and transporters” or “industrial waste disposal persons.”

When disposing a used inverter, pay heed to the following points.

Blasting during incineration : There is a danger that electrolytic condensers used in the inverter may burst if it is burnt in an incinerator, because electrolyte inside the condenser expands with heat. Be careful of blasting of electrolytic condensers.

Plastics : Plastics used as covers of the inverter and so on generate poisonous gas when the inverter burnt. When burning the inverter, be careful of such poisonous gas.

Disposing manner : Be sure to dispose the inverter properly as an industrial waste.

TOSHIBA

TOSHIBA INTERNATIONAL CORPORATION
13131 West Little York RD., Houston,
TX 77041, U.S.A
TEL: +1-713-466-0277
FAX: +1-713-896-5226

TOSHIBA ASIA PACIFIC PTE., LTD
152 Beach Rd., #16-00 Gateway East,
Singapore 189721
TEL: +65-6297-0900
FAX: +65-6297-5510

TOSHIBA CHINA CO., LTD
23rd Floor, HSBC Tower, 101 Yin Cheng
East Road, Pudong New Area, Shanghai
200120, The People's Republic of China
TEL: +86-(0)21-6841-5666
FAX: +86-(0)21-6841-1161

TOSHIBA INTERNATIONAL CORPORATION PTY., LTD
2 Morton Street Parramatta, NSW2150, Australia
TEL: +61-(0)2-9768-6600
FAX: +61-(0)2-9890-7542

TOSHIBA INFORMATION, INDUSTRIAL AND POWER SYSTEMS TAIWAN CORP.
6F, No66, Sec1 Shin Sheng N.RD, Taipei, Taiwan
TEL: +886-(0)2-2581-3639
FAX: +886-(0)2-2581-3631

E6581301REV04

●For further information, please contact your nearest Toshiba Liaison Representative or International Operations - Producer Goods.
●The data given in this manual are subject to change without notice.

2008-12