E6581611

TOSHIBA

Industrial Inverter
(For 3-phase induction motors)

Instruction Manual

TOSVERT VF-S15

<Detailed manual>

3-phase 240V class	0.4 to 15kW
1-phase 240V class	0.2 to 2.2kW
3-phase 500V class	0.4 to 15kW

NOTICE

1. Make sure that this instruction manual is delivered to the end user of the inverter unit.
2. Read this manual before installing or operating the inverter unit, and store it in a safe place for reference.

Safety precautions I
Contents
Read first 1
Connection 2
Operations 3
Setting parameters 4
Main parameters 5
Other parameters 6
Operation with external signal 7
Monitoring the operation status 8
Measures to satisfy the standards 9
Peripheral devices 10
Table of parameters and data 11
Specifications 12
Before making a service call 13
Inspection and maintenance 14
Warranty 15
Disposal of the inverter 16

I. Safety precautions

The items described in these instructions and on the inverter itself are very important so that you can use safely the inverter, prevent injury to yourself and other people around you as well as to prevent damage to property in the area. Thoroughly familiarize yourself with the symbols and indications shown below and then continue to read the manual. Make sure that you observe all warnings given.

Explanation of markings

Marking	Meaning of marking
⚠ Warning	Indicates that errors in operation will lead to death or serious injury.
⚠ Caution	Indicates that errors in operation will lead to injury (*1) to people or that these errors will cause damage to physical property. (*2)

(*1) Such things as injury, burns or shock that will not require hospitalization or long periods of outpatient treatment.

(*2) Physical property damage refers to wide-ranging damage to assets and materials.

Meanings of symbols

Marking	Meaning of marking
⃠	Indicates prohibition (Don't do it). What is prohibited will be described in or near the symbol in either text or picture form.
❗	Indicates an instruction that must be followed. Detailed instructions are described in illustrations and text in or near the symbol.
△	-Indicates warning. What is warned will be described in or near the symbol in either text or picture form. -Indicates caution. What the caution should be applied to will be described in or near the symbol in either text or picture form.

I

■ Limits in purpose

This inverter is used for controlling speeds of three-phase induction motors in general industrial use.

Single-phase input model is output by the inverter as three-phase output and cannot drive a single-phase motor.

⚠ Safety precautions

▼ This product is intended for general purpose uses in industrial application. It cannot be used applications where may cause big impact on public uses, such as power plant and railway, and equipment which endanger human life or injury, such as nuclear power control, aviation, space flight control, traffic, safety device, amusement, or medical.
It may be considerable whether to apply, under the special condition or an application where strict quality control may not be required. Please contact your Toshiba distributor.

▼ Please use our product in applications where do not cause serious accidents or damages even if product is failure, or please use in environment where safety equipment is applicable or a backup circuit device is provided outside the system.

▼ Please do not use our product for any load other than three-phase induction motors in general industrial use. (Use in other than properly applied three-phase induction motors may cause an accident.)
Single-phase input model is output by the inverter as three-phase output and cannot drive a single-phase motor.

■ Handling

⚠ Warning		Reference section
Disassembly prohibited	• Never disassemble, modify or repair. This can result in electric shock, fire and injury. Call your Toshiba distributor for repairs.	2.
Prohibited	• Never remove the terminal block cover when power is on. The unit contains many high voltage parts and contact with them will result in electric shock. • Do not stick your fingers into openings such as cable wiring holes and cooling fan covers. This can result in electric shock or other injury. • Do not place or insert any kind of object (electrical wire cuttings, rods, wires etc.) into the inverter. This can result in electric shock or fire. • Do not allow water or any other fluid to come in contact with the inverter. This can result in electric shock or fire.	2.1 2. 2. 2.
Mandatory action	• Turn the power on only after attaching the terminal block cover. If the power is turned on without the terminal block cover attached, this can result in electric shock or other injury. • If the inverter begins to emit smoke or an unusual odor, or unusual sounds, immediately turn the power off. Continuous use of the inverter in such a state will cause fire. Call your Toshiba distributor for repairs. • Always turn the power off if the inverter is not used for long periods of time since there is a possibility of malfunction caused by leaks, dust and other material. If power is left on with the inverter in that state, it can result in fire.	2.1 3. 3.

Caution		Reference section
Contact prohibited	• Do not touch heat radiating fins or discharge resistors. These devices are hot, and you'll get burned if you touch them.	3.
Mandatory action	• Use an inverter that conforms to the specifications of power supply and three-phase induction motor being used. If the inverter being used does not conform to those specifications, not only will the three-phase induction motor not rotate correctly, but it can also cause serious accidents through overheating and fire.	1.1 1.4.1

■ Transportation & installation

Warning		Reference section
Prohibited	• Do not install or operate the inverter if it is damaged or any component is missing. This can result in electric shock or fire. Call your Toshiba distributor for repairs. • Do not place any inflammable objects near the inverter. If an accident occurs in which flame is emitted, this could lead to fire. • Do not install in any location where the inverter could come into contact with water or other fluids. This can result in electric shock or fire.	1.4.4 1.4.4 1.4.4
Mandatory action	• Operate under the environmental conditions prescribed in the instruction manual. Operations under any other conditions can result in malfunction. • Mount the inverter on a metal plate. The rear panel gets very hot. Do not install in an inflammable object, this can result in fire. • Do not operate with the terminal block cover removed. This can result in electric shock. Failure to do so can lead to risk of electric shock and can result in death or serious injury. • An emergency stop device must be installed that fits with system specifications (e.g. shut off input power then engage mechanical brake). Operation cannot be stopped immediately by the inverter alone, thus resulting in an accident or injury. • All options used must be those specified by Toshiba. The use of any other option will result in an accident. • When using switchgear for the inverter, it must be installed in a cabinet. Failure to do so can lead to risk of electric shock.	1.4.4 1.4.4 1.4.4 1.4.4 1.4.4 10

Caution		Reference section
Prohibited	• When transporting or carrying, do not hold by the front panel covers. The covers will come off and the unit will drop, resulting in injury. • Do not install in any area where the unit would be subject to large amounts of vibration. This could cause the unit to fall, resulting in bodily injury.	2. 1.4.4

I

⚠ Caution		Reference section
Mandatory action	• When removing and installing the terminal cover with a screwdriver, be sure not to scratch your hand as these results in injury.	1.3.2
	• Pressing too hard on the screwdriver can scratch the inverter.	1.3.2
	• Always turn the power off when removing the wiring cover.	1.3.2
	• After wiring is complete, be sure to replace the terminal cover.	1.3.2
	• The main unit must be installed on a base that can bear the unit's weight. If the unit is installed on a base that cannot withstand that weight, the unit can fall, resulting in injury.	1.4.4
	• If braking is necessary (to hold motor shaft), install a mechanical brake. The brake on the inverter will not function as a mechanical hold, and if used for that purpose, injury will result.	1.4.4

■ Wiring

⚠ Warning		Reference section
Prohibited	• Do not connect input power to the output (motor side) terminals (U/T1, V/T2, W/T3). Connecting input power to the output could destroy the inverter or cause a fire.	2.2
	• Do not insert a braking resistor between DC terminals (between PA/+ and PC/- or PO and PC/-). It could cause a fire.	2.2
	• First shut off input power and wait at least 15 minutes before touching terminals and wires on equipment (MCCB) that is connected to inverter power side. Touching the terminals and wires before that time could result in electric shock.	2.2
	• Do not shut down the external power supply on ahead when VIA terminal is used as logic input terminal by external power supply. It could cause unexpected result as VIA terminal is ON status.	2.2
Mandatory action	• Electrical construction work must be done by a qualified expert. Connection of input power by someone who does not have that expert knowledge can result in fire or electric shock.	2.1
	• Connect output terminals (motor side) correctly. If the phase sequence is incorrect, the motor will operate in reverse and that can result in injury.	2.1
	• Wiring must be done after installation. If wiring is done prior to installation, that can result in injury or electric shock.	2.1
	• The following steps must be performed before wiring. (1) Turn off all input power. (2) Wait at least 15 minutes and check to make sure that the charge lamp is no longer lit. (3) Use a tester that can measure DC voltage (400VDC or 800VDC or more), and check to make sure that the voltage to the DC main circuits (across PA/+ - PC/-) is 45V or less. If these steps are not properly performed, the wiring will cause electric shock.	2.1
	• Tighten the screws on the terminal block to specified torque. If the screws are not tightened to the specified torque, it can lead to fire.	2.1
	• Check to make sure that the input power voltage is +10%, -15% of the rated power voltage (±10% when the load is 100% in continuous operation) written on the name plate. If the input power voltage is not +10%, -15% of the rated power voltage (±10% when the load is 100% in continuous operation), this can result in fire.	1.4.4
	• Set a parameter F109 when VIA or VIB terminals are used as logic input terminal. If it is not set, it could result in malfunction.	2.2
	• Set a parameter F147 when S3 terminal is used as PTC input terminal. If it is not set, it could result in malfunction.	2.2

⚠ Warning		Reference section
Be Grounded	• Ground must be connected securely. If the ground is not securely connected, it could lead to electric shock or fire.	2.1 2.2 10.

⚠ Caution		Reference section
Prohibited	• Do not attach devices with built-in capacitors (such as noise filters or surge absorbers) to the output (motor side) terminals. This could cause a fire.	2.1

■ Operations

⚠ Warning		Reference section
Prohibited	• Never touch the internal connector while the upper terminal cover of control panel is opened. There is a risk of electrical shock because it carries a high voltage. • Do not touch inverter terminals when electrical power is going to the inverter even if the motor is stopped. Touching the inverter terminals while power is connected to it will result in electric shock. • Do not touch switches when the hands are wet and do not try to clean the inverter with a damp cloth. Such practices will result in electric shock. • Do not go near the motor in alarm-stop status when the retry function is selected. The motor will suddenly restart and that could result in injury. Take measures for safety, e.g. attaching a cover to the motor, against accidents when the motor unexpectedly restarts.	1.3.2 3. 3. 3.
Mandatory action	• Turn the input power on only after attaching the terminal block cover. When enclosed inside a cabinet and used with the terminal block cover removed, always close the cabinet doors first and then turn the power on. If the power is turned on with the terminal block cover or cabinet doors open can result in electric shock. • Make sure that operation signals are off before resetting the inverter after malfunction. If the inverter is reset before turning off the operating signal, the motor can restart suddenly, resulting in injury. • If incorrect setting, the drive will have some damage or unexpected movement. Be sure to set the setup menu correctly.	3. 3. 3.1

⚠ Caution		Reference section
Prohibited	• Observe all permissible operating ranges of motors and mechanical equipment. (Refer to the motor's instruction manual.) Not observing these ranges will result in injury. • Do not set the stall prevention level (F601) extremely low. If the stall prevention level parameter (F601) is set at or below the no-load current of the motor, the stall preventive function will be always active and increase the frequency when it judges that regenerative braking is taking place. Do not set the stall prevention level parameter (F601) below 30% under normal use conditions.	3. 6.29.2

I

⚠ Caution		Reference section
Mandatory action	• Use an inverter that conforms to the specifications of power supply and three-phase induction motor being operated. If the inverter being used does not conform to those specifications, not only will the three-phase induction motor not rotate correctly, but it will cause serious accidents through overheating and fire.	1.4.1
	• The leakage current through the input/output power cables of inverter and capacitance of motor can affect to peripheral devices. The value of leakage current is increased under the condition of the PWM carrier frequency and the length of the input/output power cables. In case the total cable length (total of length between an inverter and motors) is more than 100m, overcurrent trip can occur even the motor no-load current. Make enough space among each phase cable or install the filter (MSF) as countermeasure.	1.4.3

■ When operation by using remote keypad is selected

⚠ Warning		Reference section
Mandatory action	• Set the parameter Communication time-out time (F803), Communication time-out action (F804) and Disconnection detection of extension panel (F731). If these are not properly set, the inverter can not be stopped immediately in breaking communication and this could result in injury and accidents.	6.38.1
	• An emergency stop device and the interlock that fit with system specifications must be installed. If these are not properly installed, the inverter can not be stopped immediately and this could result in injury and accidents.	6.38.1

■ When sequence for restart after a momentary failure is selected (inverter)

⚠ Caution		Reference section
Mandatory action	• Stand clear of motors and mechanical equipment. If the motor stops due to a momentary power failure, the equipment will start suddenly after power is restored. This could result in unexpected injury.	5.9
	• Attach caution label about sudden restart after a momentary power failure on inverters, motors and equipment for prevention of accidents in advance.	5.9

■ When retry function is selected (inverter)

⚠ Caution		Reference section
Mandatory action	• Stand clear of motors and equipment. If the motor and equipment stop when the alarm is given, selection of the retry function will restart them suddenly after the specified time has elapsed. This could result in unexpected injury.	6.19.3
	• Attach caution label about sudden restart in retry function on inverters, motors and equipment for prevention of accidents in advance.	6.19.3

■ Maintenance and inspection

⚠ Warning		Reference section
Prohibited	• Do not replace parts. This could be a cause of electric shock, fire and bodily injury. To replace parts, call your Toshiba distributor.	14.2
Mandatory action	• The equipment must be inspected daily. If the equipment is not inspected and maintained, errors and malfunctions can not be discovered and that could result in accidents. • Before inspection, perform the following steps. (1) Turn off all input power to the inverter. (2) Wait at least 15 minutes and check to make sure that the charge lamp is no longer lit. (3) Use a tester that can measure DC voltages (400V/800V DC or more), and check that the voltage to the DC main circuits (across PA/+ - PC/-) is 45V or less. Performing an inspection without carrying out these steps first could lead to electric shock.	14. 14. 14.2

■ Disposal

⚠ Caution		Reference section
Mandatory action	• If you dispose of the inverter, have it done by a specialist in industry waste disposal (*). If you dispose of the inverter by yourself, this can result in explosion of capacitor or produce noxious gases, resulting in injury. (*) Persons who specialize in the processing of waste and known as "industrial waste product collectors and transporters" or "industrial waste disposal persons". Please observe any applicable law, regulation, rule or ordinance for industrial waste disposal.	16.

■ Attach caution labels

Shown here are examples of caution labels to prevent, in advance, accidents in relation to inverters, motors and other equipment. Be sure to affix the caution label where it is easily visible when selecting the auto-restart function (5.9) or the retry function (6.19.3).

If the inverter has been programmed for restart sequence of momentary power failure, place warning labels in a place where they can be easily seen and read.
(Example of caution label)

⚠ Caution (Functions programmed for restart)
Do not go near motors and equipment. Motors and equipment that have stopped temporarily after momentary power failure will restart suddenly after recovery.

If the retry function has been selected, place warning labels in a location where they can be easily seen and read.

(Example of caution label)

⚠ Caution (Functions programmed for retry)
Do not go near motors and equipment. Motors and equipment that have stopped temporarily after an alarm will restart suddenly after the specified time has elapsed.

——— Contents ———

I Safety precautions 1

1. Read first A-1
   1.1 Check product purchase A-1
   1.2 Contents of the product A-2
   1.3 Names and functions A-3
   1.4 Notes on the application A-22

2. Connection B-1
   2.1 Cautions on wiring B-1
   2.2 Standard connections B-3
   2.3 Description of terminals B-6

3. Operations C-1
   3.1 How to Set the Setup Menu C-2
   3.2 Simplified Operation of the VF-S15 ..... C-4
   3.3 How to operate the VF- S15 ..... C-8

4. Setting parameters D-1
   4.1 Setting and Display Modes D-1
   4.2 How to set parameters D-3
   4.3 Functions useful in searching for a parameter or changing a parameter setting D-7
   4.4 Checking the region settings selection D-13
   4.5 EASY key function D-14

5. Main parameters E-1
   5.1 Meter setting and adjustment E-1
   5.2 Setting acceleration/deceleration time E-4
   5.3 Maximum frequency E-5
   5.4 Upper limit and lower limit frequencies E-6
   5.5 Base frequency E-7
   5.6 Setting the electronic thermal E-8
   5.7 Preset-speed operation (speeds in 15 steps) E-16
   5.8 Switching between two frequency commands E-19
   5.9 Auto-restart (Restart of coasting motor) E-21
   5.10 Changing operation panel display E-23

6. Other parameters F-1
   6.1 Parameters useful for setting and adjustments F-2
   6.2 Selection of operation mode F-12
   6.3 Selecting control mode F-17

6.4 Manual torque boost - increasing torque boost at low speeds F-24
6.5 Signal output F-25
6.6 Input signal selection....F-28
6.7 Terminal function selection....F-31
6.8 Basic parameters 2 ....F-33
6.9 V/f 5-point setting F-35
6.10 Frequency priority selection F-35
6.11 Operation frequency....F-44
6.12 DC braking F-46
6.13 Stop at lower-limit frequency operation (sleep function)....F-48
6.14 Jog run mode F-49
6.15 Jump frequency - avoiding resonant frequencies....F-51
6.16 Bumpless operation F-52
6.17 Low voltage operation F-54
6.18 PWM carrier frequency F-54
6.19 Trip-less intensification....F-60
6.20 Drooping control....F-73
6.21 Light-load high-speed operation function F-75
6.22 Braking function F-75
6.23 Acceleration/deceleration suspend function (Dwell function) F-76
6.24 PID control F-78
6.25 Setting motor constants....F-85
6.26 Torque limit....F-91
6.27 Acceleration/deceleration time 2 and 3 ....F-96
6.28 Shock monitoring function....F-100
6.29 Protection functions....F-101
6.30 Forced fire-speed control function....F-115
6.31 Override F-116
6.32 Analog input terminal function selection....F-119
6.33 Adjustment parameters F-120
6.34 Operation panel parameter F-124
6.35 Tracing functions....F-134
6.36 Integrating wattmeter F-134
6.37 Parameter registration to easy setting mode....F-134
6.38 Communication function....F-135
6.39 Permanent magnet motors....F-143
6.40 Traverse function F-144

7. Operations with external signal G-1
7.1 Operating external signals G-1
7.2 Applied operations by an I/O signal (operation from the terminal block) G-2
7.3 Speed instruction (analog signal) settings from external devices....G-12

8. Monitoring the operation status H-1
8.1 Flow of status monitor mode H-1
8.2 Status monitor mode H-2
8.3 Display of trip information H-6

9. Measures to satisfy the standards I-1
9.1 How to cope with the CE Marking Directive I-1
9.2 Compliance with UL Standard and CSA Standard I-6

10. Peripheral devices J-1
10.1 Selection of wiring materials and devices J-1
10.2 Installation of a magnetic contactor J-4
10.3 Installation of an overload relay J-5
10.4 Optional external devices J-6

11. Table of parameters and data K-1
11.1 Frequency setting parameter K-1
11.2 Basic parameters K-1
11.3 Extended parameters K-5
11.4 Default settings by inverter rating K-28
11.5 Default settings by setup menu K-29
11.6 Input Terminal Function K-30
11.7 Output Terminal Function K-34
11.8 Application easy setting K-38
11.9 Unchangeable parameters in running K-39

12. Specifications L-1
12.1 Models and their standard specifications L-1
12.2 Outside dimensions and mass L-4

13. Before making a service call - Trip information and remedies M-1
13.1 Trip/Alarm causes and remedies M-1
13.2 Restoring the inverter from a trip M-7
13.3 If the motor does not run while no trip message is displayed M-8
13.4 How to determine the causes of other problems M-9

14. Inspection and maintenance N-1
14.1 Regular inspection N-1
14.2 Periodical inspection N-2
14.3 Making a call for servicing N-5
14.4 Keeping the inverter in storage N-5

15. Warranty.....O-1

16. Disposal of the inverter P-1

1. Read first

1.1 Check product purchase

Before using the product you have purchased, check to make sure that it is exactly what you ordered.

Caution	
Mandatory action	Use an inverter that conforms to the specifications of power supply and three-phase induction motor being used. If the inverter being used does not conform to those specifications, not only will the three-phase induction motor not rotate correctly, but it can also cause serious accidents through overheating and fire.

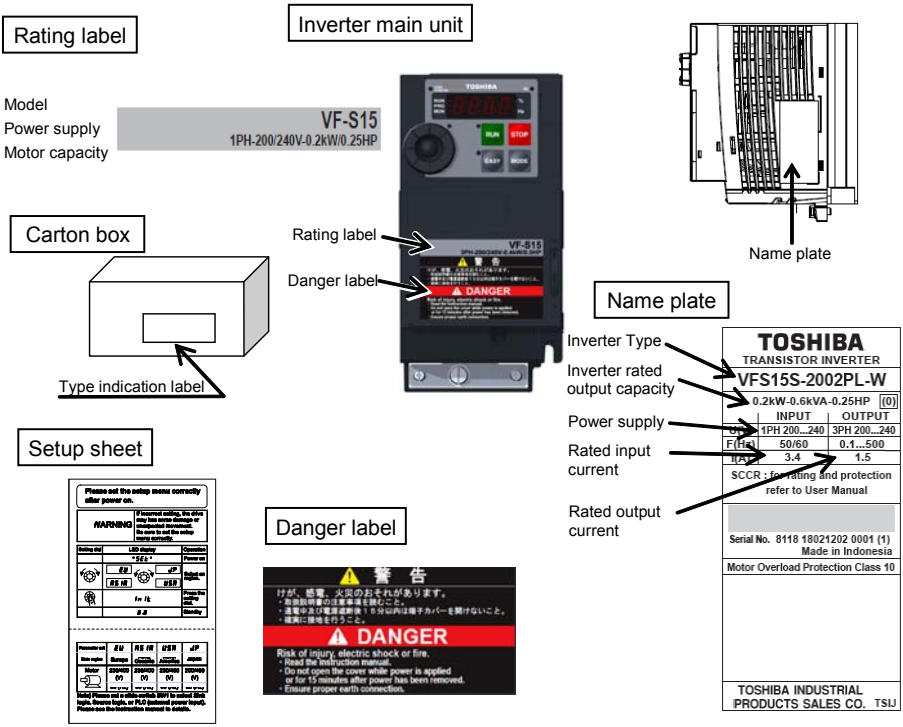

1

Quick start manual

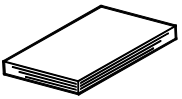

CD-ROM

Contains the instruction manual in digital form

Danger label kit

Danger labels for sticking in 6 languages.

・English
・Germany / English
・Italian / English
・Spanish / English
・Chinese / English
・France / English

1.2 Contents of the product

Explanation of the name plate label

Type Form

V F S 1 5 S - 2 0 0 7 P L - W

Model name
TOSVERT VF-S15 series

Input (AC) voltage
2 : 200V to 240V
4 : 380V to 500V

Applicable motor capacity
002 : 0.2kW
004 : 0.4kW
007 : 0.75kW
015 : 1.5kW
022 : 2.2kW
037 : 4.0kW
055 : 5.5kW
075 : 7.5kW
110 : 11kW
150 : 15kW

Additional functions I
L: Built-in high-attenuation EMC filter
M: Built-in basic filter

Operation panel
P: Provided

Additional functions II
W: World model
None: Japanese model

Number of power phases
S: single-phase
None:three-phase

Note 1) Always shut power off first then check the ratings label of inverter held in a cabinet.
Note 2) ID label is stuck for special specification product.

This instruction manual is for the “Ver. 102” or “Ver104” CPU version of the inverter.
The function in this manual may not be partially realized in the previous CPU version.
Please be informed that CPU version will be frequently upgraded.

1.3 Names and functions

1.3.1 Outside view

[Front view]

STATUS lamp

Lights and blinks when using CANopen® communication option.

Charge lamp

Indicates there is a high voltage still in the inverter. Do not open the terminal block cover when this lamp is lit because it is dangerous.

Cover

This is the body and terminal block cover.
Always close this cover before operation to avoid accidentally touching the terminal block.
The serial number is recorded on the back side.

Door lock

Slide the door lock to upside for unlock.

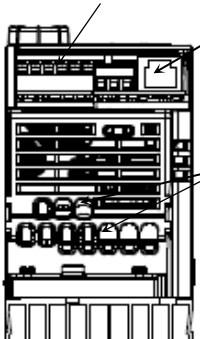

[Bottom view]

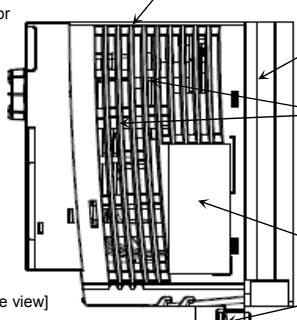

[Side view]

Note 1) Remove the protective label as shown on the next page when installing the inverter side by side with other inverters and using the inverter in locations with temperatures above 40°C.

1

Example of the protective label on the top of the inverter

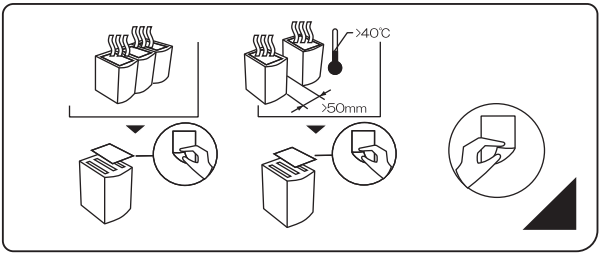

[Opening the cover]

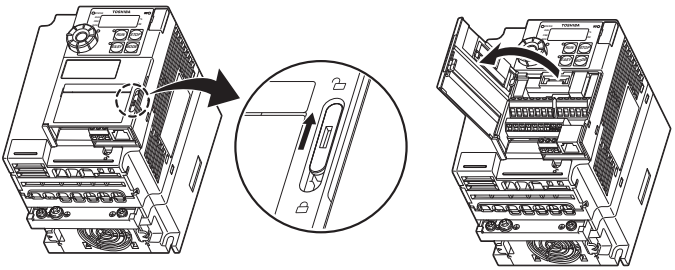

Insert a small screw driver
and slide the door lock to
upside for unlock.
(Slide it to downside for lock.)

★About the monitor display

The LED on the operation panel uses the following symbols to indicate parameters and operations.

LED display (numbers)

0	1	2	3	4	5	6	7	8	9	-
0	1	2	3	4	5	6	7	8	9	-

LED display (letters)

Aa	Bb	C	c	Dd	Ee	Ff	Gg	H	h	I	i	Jj	Kk	Ll
A	b	C	c	d	E	F	G	H	h	I	i	J	/	L

Mm	Nn	O	o	Pp	Qq	Rr	Ss	Tt	Uu	Vv	Ww	Xx	Yy	Zz
M	n	O	o	P	q	r	S	t	U	u	/	/	y	/

[Operation panel]

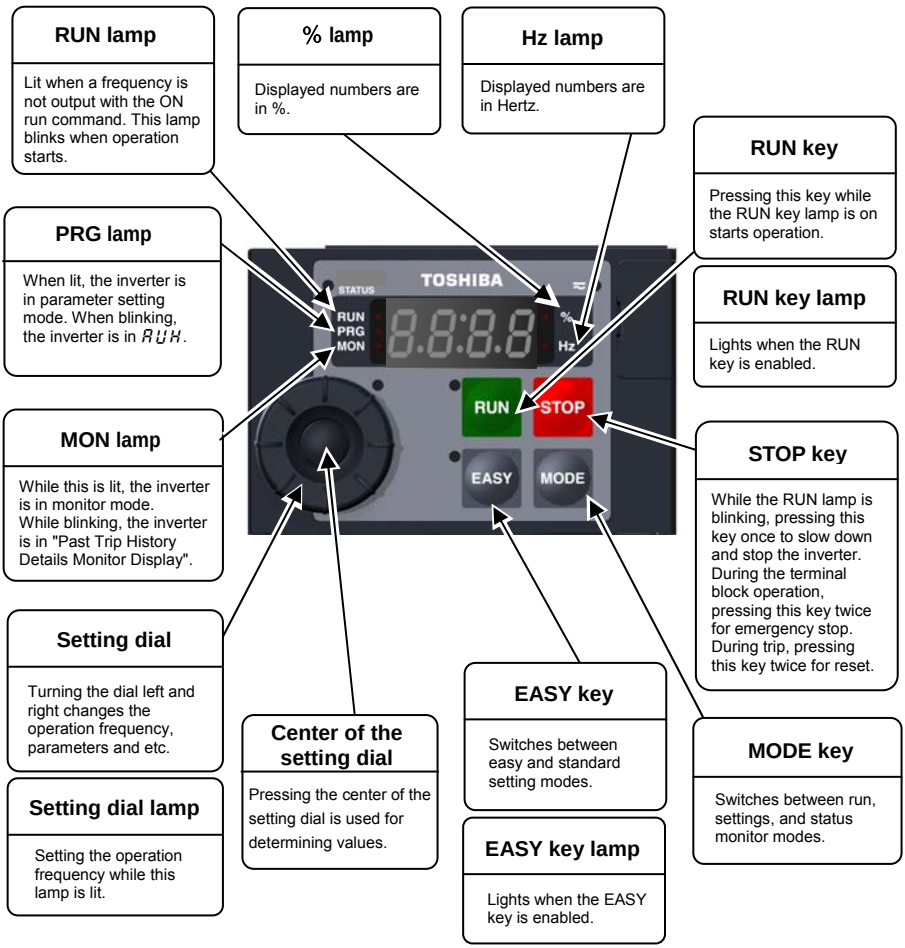

1.3.2 Opening terminal cover and terminal block

Warning	
Prohibited	• Never touch the internal connector while the upper cover of control panel is opened. There is a risk of electrical shock because it carries a high voltage.

Caution	
Mandatory action	• When removing and mounting the terminal cover or the terminal block with a screwdriver, be sure not to scratch your hand as these results in injury. • Pressing too hard on the screwdriver can scratch the inverter. • Always turn the power off when removing the wiring cover. • After wiring is complete, be sure to replace the terminal cover.

Use the following procedure to open the terminal cover and pull the power terminal block.

Inverter type	Procedure	Reference number
VFS15-2004PM-W to 2007PM-W VFS15S-2002PL-W to 2007PL-W	In the beginning, remove the outside terminal block cover.	(1)
	Next, remove the inside terminal block cover.	(2)
VFS15-2015PM-W to 2037PM-W VFS15S-2015PL-W, 2022PL-W VFS15-4004PL-W to 4015PL-W	In the beginning, remove the outside terminal block cover.	(3)
	Next, remove the inside terminal block cover.	(4)
VFS15-4022PL-W, 4037PL-W	In the beginning, remove the outside terminal block cover.	(3)
	Next, remove the inside terminal block cover.	(5)
VFS15-2055PM-W to 2150PM-W VFS15-4055PL-W to 4150PL-W	Follow a procedure and remove the power terminal cover.	(6)

(1) Removing the outside terminal block cover (VFS15-2004PM-W to 2007PM-W, VFS15S-2002PL-W to 2007PL-W)

1)

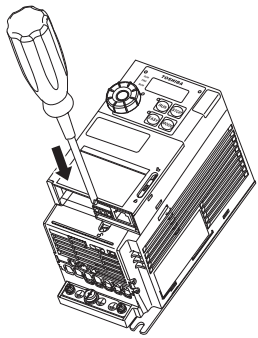

Insert a screwdriver or other thin object into the hole indicated with the ⏍ mark.

2)

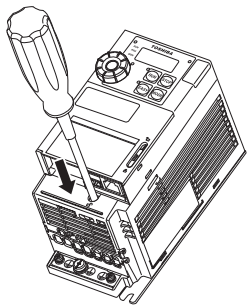

Press in on the screwdriver.

3)

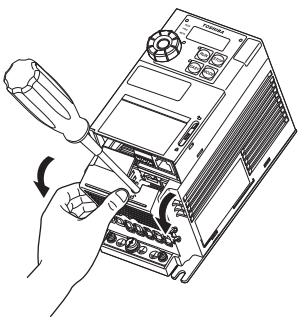

While pressing on the screwdriver, rotate the terminal cover downward to remove it.

4)

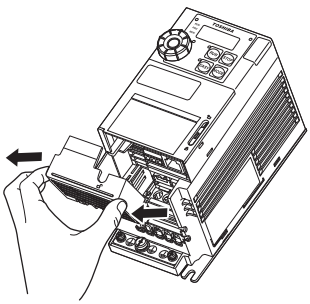

Pull the terminal cover up at an angle.

● After wiring is complete, be sure to restore the terminal cover to its original position.

(2) Removing the inside terminal block cover (VFS15-2004PM-W to 2007PM-W, VFS15S-2002PL-W to 2007PL-W)

1)

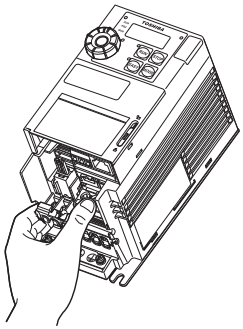

The finger is put on to the tab part of the terminal block cover.

2)

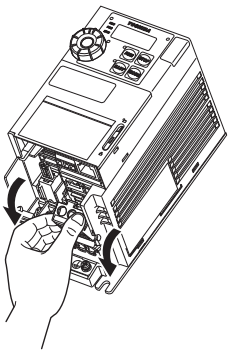

While pressing on the screwdriver, rotate the terminal cover downward to remove it.

3)

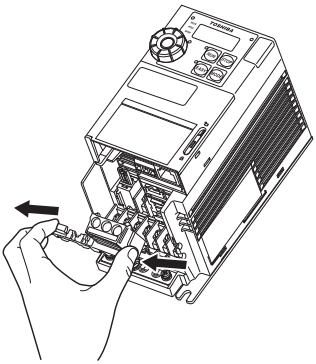

Pull the terminal cover up at an angle.

● After wiring is complete, be sure to restore the terminal cover to its original position.

(3) Removing the outside terminal block cover (VFS15-2015PM-W to 2037PM-W, VFS15S-2015PL-W, 2022PL-W, VFS15-4004PL-W to 4037PL-W)

1)

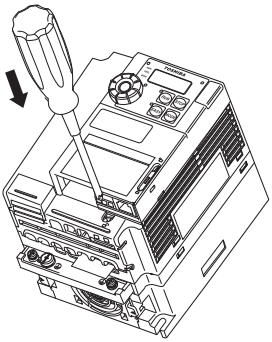

Insert a screwdriver or other thin object into the hole indicated with the ⌓ mark.

2)

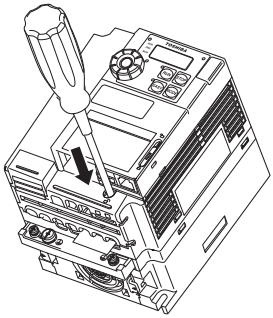

Press in on the screwdriver.

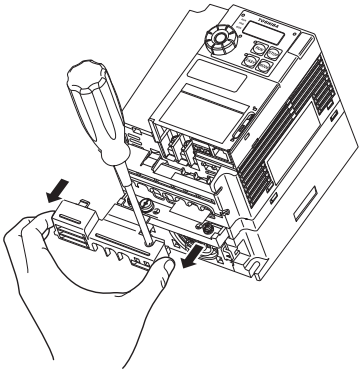

3)

While pressing on the screwdriver, sidles the terminal cover downward to remove it.

● After wiring is complete, be sure to restore the terminal cover to its original position.

(4) Removing the inside terminal block cover (VFS15-2015PM-W to 2037PM-W, VFS15S-2015PL-W, 2022PL-W, VFS15-4004PL-W to 4015PL-W)

1)

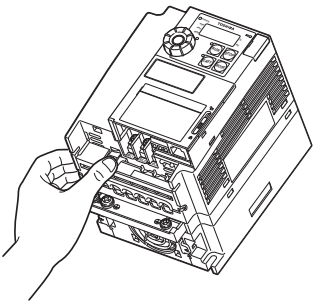

The finger is put on to the tab part of the terminal block cover.

2)

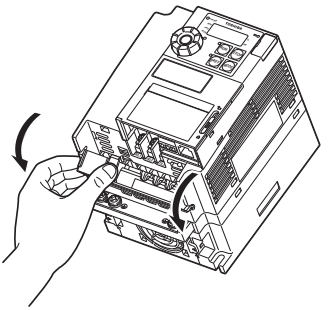

While pressing on the screwdriver, rotate the terminal cover downward to remove it.

3)

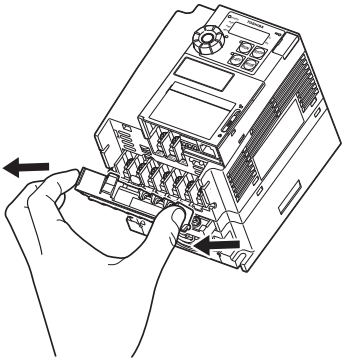

Pull the terminal cover up at an angle.

● After wiring is complete, be sure to restore the terminal cover to its original position.

(5) Removing the inside terminal block cover (VFS15-4022PL-W, 4037PL-W)

1)

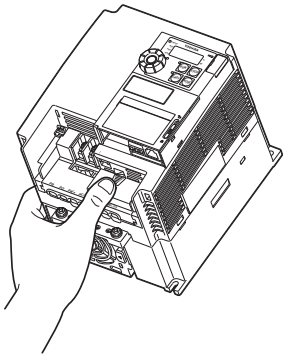

The finger is put on to the tab part of the terminal block cover.

2)

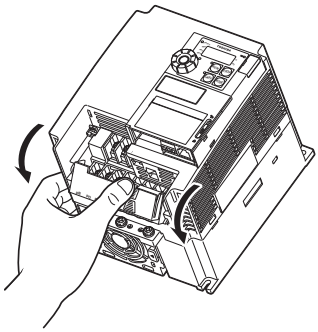

While pressing on the screwdriver, rotate the terminal cover downward to remove it.

3)

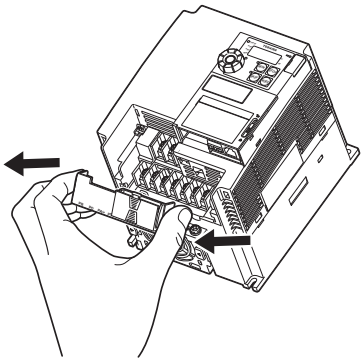

Pull the terminal cover up at an angle.

● After wiring is complete, be sure to restore the terminal cover to its original position.

(6) Removing the power terminal cover (VFS15-2055PM-W to 2150PM-W, VFS15-4055PL-W to 4150PL-W)

1)

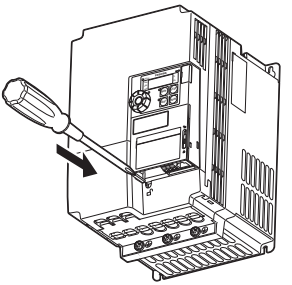

Insert a screwdriver or other thin object into the hole indicated with the ⊏⌒ mark.

2)

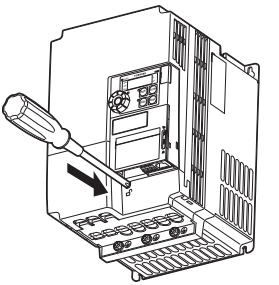

Press in on the screwdriver.

3)

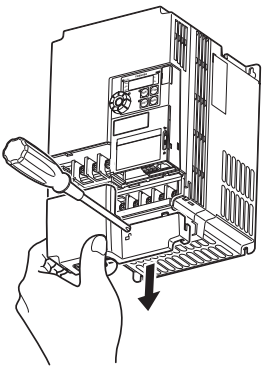

While pressing on the screwdriver, slide the terminal cover downward to remove it.

● After wiring is complete, be sure to restore the terminal cover to its original position.

1.3.3 Power circuit and control circuit terminal blocks

1) Power circuit terminal

In case of the lug connector, cover the lug connector with insulated tube, or use the insulated lug connector.

(Recommended Lug connectors and Insulated Tubes)

Screw Size	Wire Size (mm^2)	Manufacturer and Type-Form	
		Lug connector	Insulated Tube
		JST	SHINAGAWA SHOKO
M3.5 screw	1.5-2.5	V2-M3	
M4 screw	1.5-2.5	V2-4	
	3.5-5.5	V5.5-4	
M5 screw	1.5-2.5	V2-5	
	3.5-6.0	V5.5-5	
	8.0-10	R8-5	TCM-81
	14-16	R14-5	TCM-141
M6 screw	1.5-2.5	V2-6	
	3.5-6.0	R5.5-6	TCM-53
	8.0-10	R8-6	TCM-81
	14-16	R14-6	TCM-141
	22-25	R22-6	TCM-221

Use a plus or minus screwdriver to loose or tighten screws.

Screw size	Tightening torque	
M3.5 screw	1.0 N·m	8.9 lb·in
M4 screw	1.4 N·m	12.4 lb·in
M5 screw	2.4 N·m	20.8 lb·in
M6 screw	4.5 N·m	40.0 lb·in
M4 screw (grounding terminal)	1.4 N·m	12.4 lb·in
M5 screw (grounding terminal)	2.8 N·m	24.8 lb·in

Refer to section 2.3.1 for details about terminal functions.

VFS15-2004PM-W to 2007PM-W

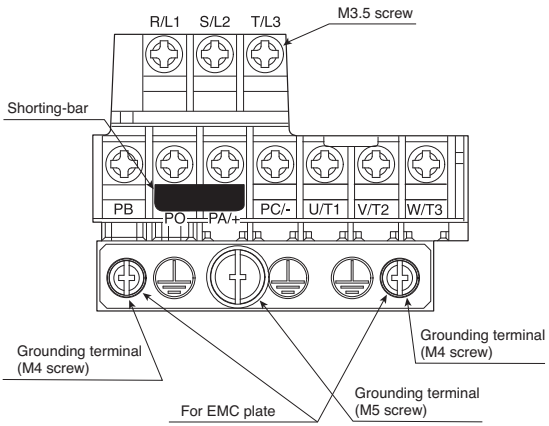

Note1) Bend the clips on the wiring port of the terminal cover to connect the PB, PO, PA/+, and PC/- terminals.
Note2) Be careful to insert all wires into the cage of terminal block.

VFS15-2015PM-W, 2022PM-W

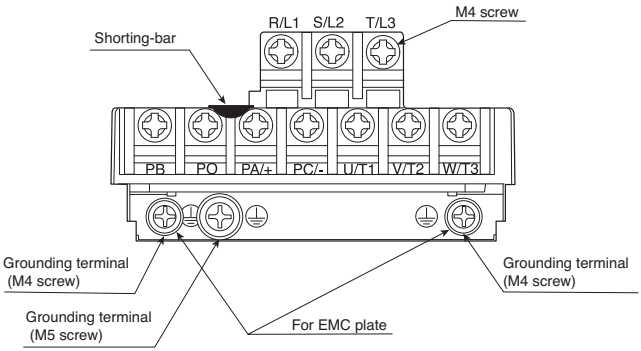

VFS15-2037PM-W

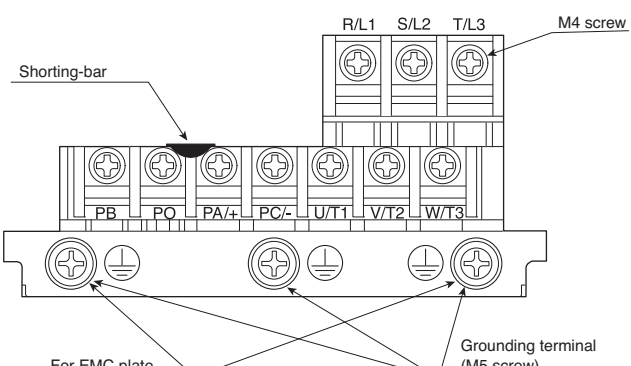

Note1) Bend the clips on the wiring port of the terminal cover to connect the PB, PO, PA/+, and PC/- terminals.
Note2) Be careful to insert all wires into the cage of terminal block.

1

VFS15S-2002PL-W to 2007PL-W

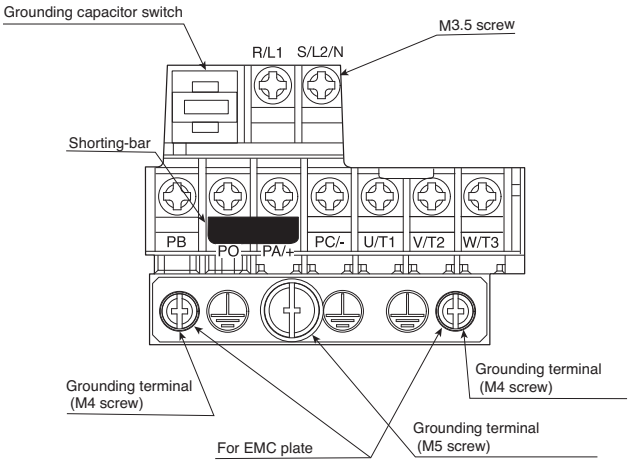

VFS15S-2015PL-W, 2022PL-W

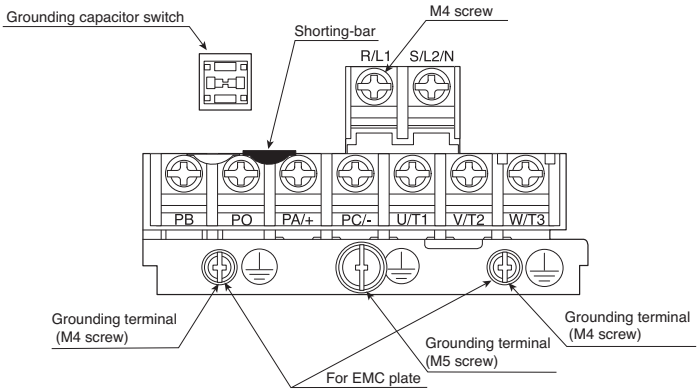

Note1) Bend the clips on the wiring port of the terminal cover to connect the PB, PO, PA/+, and PC/- terminals.
Note2) Be careful to insert all wires into the cage of terminal block.

VFS15-4004PL-W to 4015PL-W

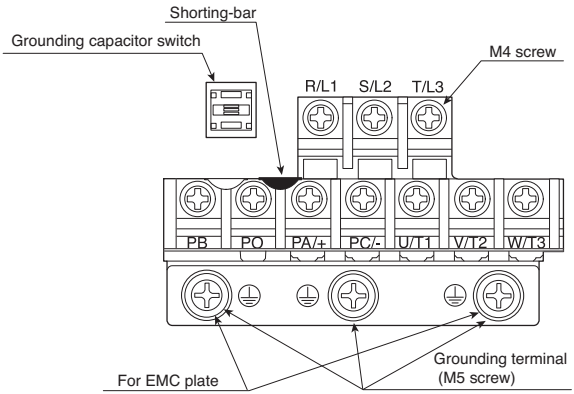

VFS15-4022PL-W, 4037PL-W

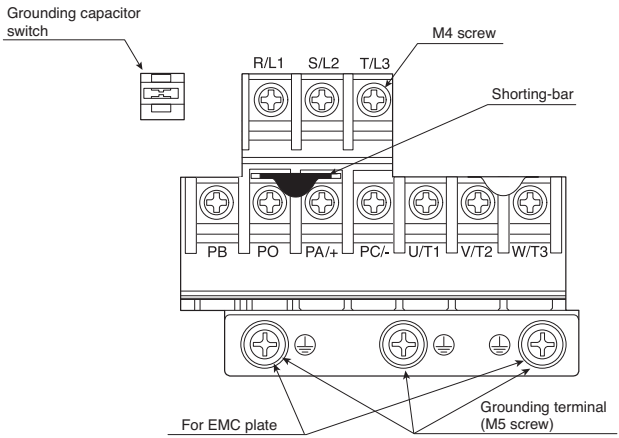

Note1) Bend the clips on the wiring port of the terminal cover to connect the PB, PO, PA/+, and PC/- terminals.
Note2) Be careful to insert all wires into the cage of terminal block.

1

VFS15-2055PM-W, 2075PM-W
VFS15-4055PL-W, 4075PL-W

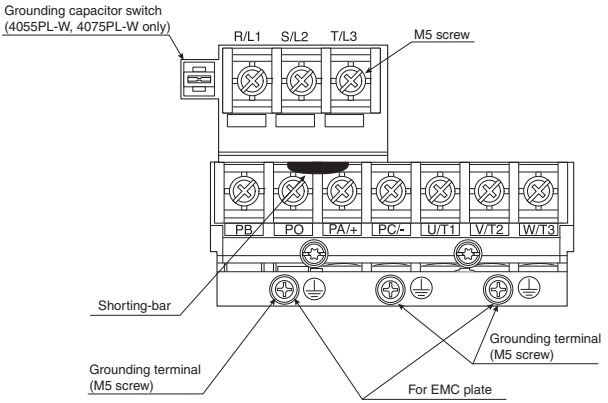

VFS15-2110PM-W, 2150PM-W

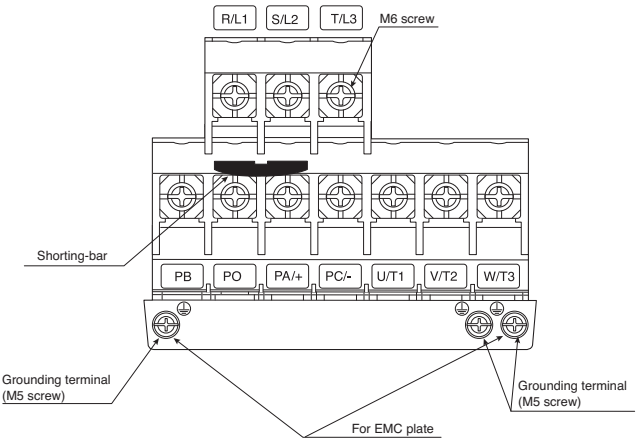

Note1) Bend the clips on the wiring port of the terminal cover to connect the PB, PO, PA/+, and PC/- terminals.
Note2) Be careful to insert all wires into the cage of terminal block.

VFS15-4110PL-W, 4150PL-W

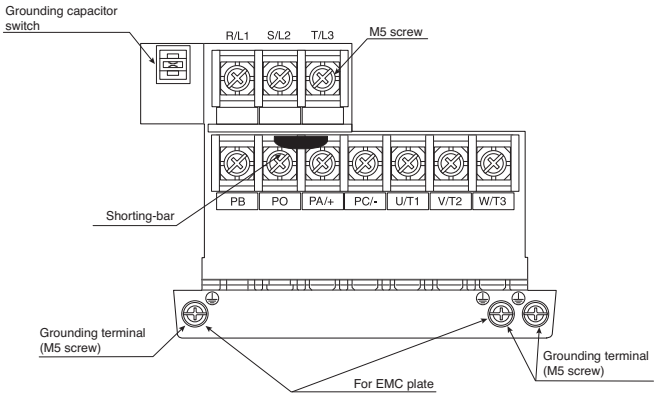

Note1) Bend the clips on the wiring port of the terminal cover to connect the PB, PO, PA/+, and PC/- terminals.
Note2) Be careful to insert all wires into the cage of terminal block.

2) Grounding capacitor switch

Single-phase 240V model and three-phase 500V model have a built-in high-attenuation noise filter and is grounded via a capacitor.
A switch makes for easy switching to reduce leakage current from the inverter and the load on the capacitor. However, be careful, as reducing the load means non-conformity with the EMC standard on the inverter itself. Always do switching with the power off.

Note) In case of three phase 500V-4.0kW model, if you disconnect the capacitor from ground, set the parameter of carrier frequency F300 to 4kHz or less with motor cable length 30m or less.
In case of three phase 500V-4.0kW model, don't disconnect the capacitor from the ground, if you set the overload characteristic selection AUL to 2.

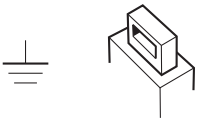

Pressing this switches the grounding capacitor's capacity from small to large. (Default setting)

Pulling this switches the grounding capacitor's capacity from large to small. This reduces the leakage current.
When this inverter is connected to the IT system (insulated ground of power supply or the system has Impedance), the switch has to be pulled as the figure shows.

3) Control circuit terminal block

The control circuit terminal block is common to all equipment.

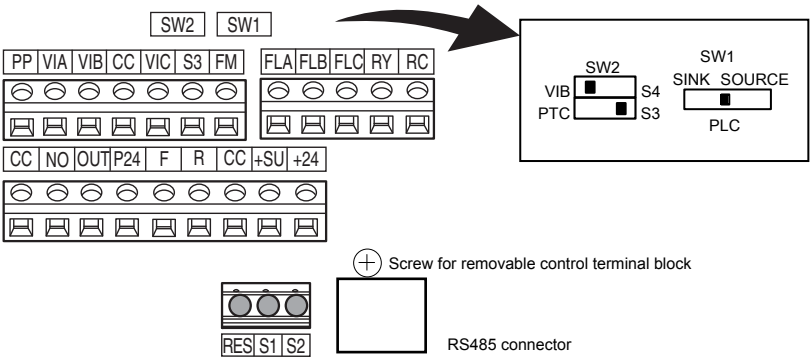

Screw size	Recommended tightening torque
M3 screw	0.5 N·m
	4.4 lb·in

Stripping length: 6 (mm)
Screwdriver: Small-sized flat-blade screwdriver
(Blade thickness: 0.5 mm, blade width: 3.5 mm)

Refer to section 2.3.2 for details about all terminal functions.

Wire size

Conductor	1 wire	2 wires of same size
Solid	0.3-1.5mm^2 (AWG 22-16)	0.3-0.75mm^2 (AWG 22-18)
Stranded		

Recommended ferrule

Using ferrule to be improved efficiency and reliability of wiring is recommended.

	Wire size mm^2 (AWG)	Type	
		PHOENIX CONTACT	Dinkle International.,Ltd
	0.34 (22)	AI 0.34-6TQ	DN00306
	0.5 (20)	AI 0.5-6WH	DN00506
	0.75 (18)	AI 0.75-6GY	DN00706
	1 (18)	AI 1-6RD	DN01006
	1.5 (16)	AI 1.5-8BK	DN01508
*2	2 X 0.5 (-)	AI TWIN2 X 0.5-8WH	DTE00508
*2	2 X0.75 (-)	AI TWIN2 X 0.75-8GY	DTE00708

*1: Crimping pliers CRIMPFOX ZA3 (PHOENIX CONTACT)
CT1 (Dinkle International.,Ltd)

*2: These ferrules enable practical crimping of two wires in a ferrule.

1.4 Notes on the application

1.4.1 Motors

When this inverter and the motor are used in conjunction, pay attention to the following items.

⚠ Caution	
Mandatory action	Use an inverter that conforms to the specifications of power supply and three-phase induction motor being operated. If the inverter being used does not conform to those specifications, not only will the three-phase induction motor not rotate correctly, but it will cause serious accidents through overheating and fire.

Comparisons with commercial power operation

This inverter employs the sinusoidal PWM system. However, the output voltage and output current are not perfect sine waves, they have a distorted wave that is close to sinusoidal waveform. This is why compared to operation with a commercial power there will be a slight increase in motor temperature, noise and vibration.

Operation in the low-speed area

When running continuously at low speed in conjunction with a general purpose motor, there may be a decline in that motor's cooling effect. If this happens, operate with the output decreased from rated load. To carry out low-speed operation continuously at the rated torque, we recommend to use a inverter rated motor or a forced cooled motor designed for use with an inverter. When operating in conjunction with an inverter rated motor, you must change the inverter's motor overload protection level OLM to VF motor use.

Adjusting the overload protection level

This inverter protects against overloads with its overload detection circuits (electronic thermal). The electronic thermal's reference current is set to the inverter's rated current, so it must be adjusted in line with the rated current of the motor being used in combination.

High speed operation at and above 60Hz

Operating at frequencies greater than 60Hz will increase noise and vibration. There is also a possibility this will exceed the motor's mechanical strength limits and the bearing limits so you should inquire to the motor's manufacturer about such operation.

Method of lubricating load mechanisms

Operating an oil-lubricated reduction gear and gear motor in the low-speed areas will worsen the lubricating effect. Check with the manufacturer of the reduction gear to find out about operable gearing area.

Low loads and low inertia loads

The motor may demonstrate instability such as abnormal vibrations or overcurrent trips at light loads of 50% or under of the load percentage, or when the load's inertia moment is extremely small. If that happens reduce the carrier frequency.

Occurrence of instability

Unstable phenomena may occur with the load and motor combinations shown below.

- Combined with a motor that exceeds applicable motor ratings for the inverter
- Combine with a much smaller motor according to the applicable motor rating of the inverter.
- Combined with special motors

To deal with the above lower the settings of inverter carrier frequency.

- Combined with couplings between load devices and motors with high backlash

When using the inverter in the above combination, use the S-pattern acceleration/deceleration function, or when vector control is selected, adjust the load inertia moment ratio or switch to V/f control mode.

- Combined with loads that have sharp fluctuations in rotation such as piston movements

In this case, adjust the load inertia moment ratio during vector control or switch to V/f control.

Braking a motor when cutting off power supply

A motor with its power cut off goes into free-run, and does not stop immediately. To stop the motor quickly as soon as the power is cut off install an auxiliary brake. There are different kinds of brake devices, both electrical and mechanical. Select the brake that is best for the system.

Load that produces regenerative torque

When combined with a load that produces regenerative torque, the overvoltage or overcurrent protection function may be activated to trip the inverter.

Motors with a brake

When motors with a brake are directly connected to the inverter's output, the brake cannot be released at startup because of low voltage. Wire the brake circuit separately from the main circuit.

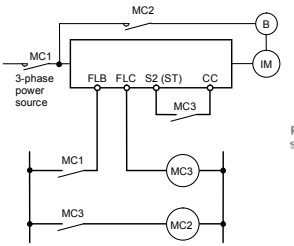

Circuit diagram 1

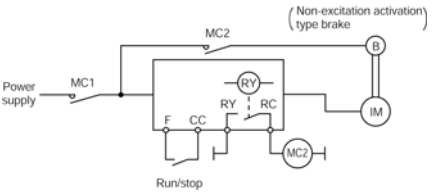

In circuit diagram 1, the brake is turned on and off through MC2 and MC3. If you do not wire it as shown in diagram 1, an over-current trip may occur because of a bound current during brake operation. (Example of standby ST assigned to terminal S2.)
In circuit diagram 2, the brake is turned on and off by using low-speed signal RY-RC.
In some situations, such as with elevators, turning the brake on and off with a low-speed signal may be appropriate. Be sure to contact us before designing your system.

Measures to protect motors against surge voltages

In a system in which a 500V-class inverter is used to control the operation of a motor, very high surge voltages may be produced. When applied to the motor coils repeatedly for a long time, may cause deterioration of their insulation, depending on the cable length, cable routing and types of cables used. Here are some examples of measures against surge voltages.

(1) Lower the inverter's carrier frequency.
(2) Set the parameter F316 (Carrier frequency control mode selection) to 2 or 3.
(3) Use a motor with high insulation strength.
(4) Insert an AC reactor or a surge voltage suppression filter between the inverter and the motor.

1.4.2 Inverters

Protecting inverters from overcurrent

The inverter has an overcurrent protection function. The programmed current level is set to the inverter's maximum applicable motor. If the motor used has a small capacity, the overcurrent level and the electronic thermal protection must be readjusted. If adjustment is necessary, refer to section 5.6, and make adjustments as directed.

Inverter capacity

Do not use a small-capacity (kVA) inverter to control the operation of a large-capacity motor (two-class or more larger motor), no matter how light the load is. Current ripple will raise the output peak current making it easier to set off the overcurrent trip.

Power factor correction capacitor

Power factor correction capacitors cannot be installed on the output side of the inverter. When a motor is run that has a power factor correction capacitor attached to it, remove the capacitors. This can cause inverter malfunction and capacitor destruction.

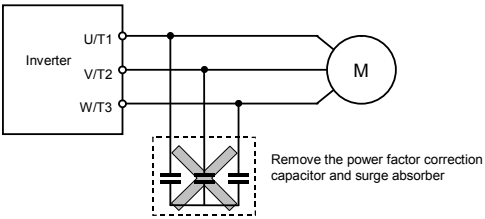

Power factor correction capacitor

Operating at other than rated voltage

Connections to voltages other than the rated voltage described in the rating label cannot be made. If a connection must be made to a power supply other than one with rated voltage, use a transformer to raise or lower the voltage to the rated voltage.

Circuit breaking when two or more inverters are used on the same power line

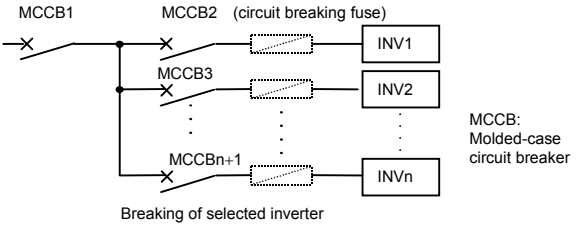

There is no fuse in the inverter's main circuit. Thus, as the diagram above shows, when more than one inverter is used on the same power line, you must select interrupting characteristics so that only MCCB2 to MCCBn+1 will trip and the MCCB1 will not trip when a short occurs in the inverter (INV1). When you cannot select the proper characteristics install a circuit interrupting fuse behind MCCB2 to MCCBn+1.

If power supply distortion is not negligible

If the power supply distortion is not negligible because the inverter shares a power distribution line with other systems causing distorted waves, such as systems with thyristors or large-capacity inverters, install an input AC reactor to improve the input power factor, to reduce higher harmonics, or to suppress external surges.

If multiple inverters are connected with common DC bus link

When inverters are fed by AC power supply and connected with common DC bus link, ground fault trip protection may operate. In that case, set ground fault detection selection (F6 14) to 0 “Disabled”.

■ Disposal

Refer to chapter 16.

1.4.3 What to do about the leakage current

Caution	
Mandatory action	• The leakage current through the input/output power cables of inverter and capacitance of motor can affect to peripheral devices. The value of leakage current is increased under the condition of the PWM carrier frequency and the length of the input/output power cables. In case the total cable length (total of length between an inverter and motors) is more than 100m, overcurrent trip can occur even the motor no-load current. Make enough space among each phase cable or install the filter (MSF) as countermeasure.

(1) Influence of leakage current across ground

Leakage current may flow not just through the inverter system but also through ground wires to other systems. Leakage current will cause earth leakage breakers, leakage current relays, ground relays, fire alarms and sensors to operate improperly, and it will cause superimposed noise on the TV screen or display of incorrect current detection with the CT.

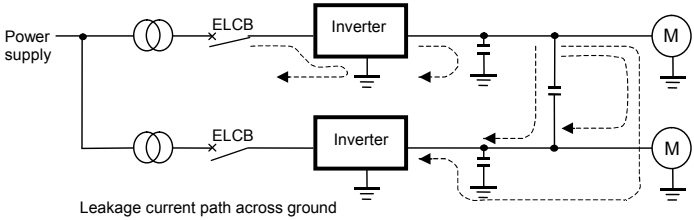

Leakage current path across ground

Remedies:

1. If there is no radio-frequency interference or similar problem, detach the built-in noise filter capacitor, using the grounding capacitor switch.
2. Reduce PWM carrier frequency.
   The setting of PWM carrier frequency is done with the parameter F300.
   Although the electromagnetic noise level is reduced, the motor acoustic noise is increased.
3. Use high frequency remedial products for earth leakage breakers

(2) Influence of leakage current across lines

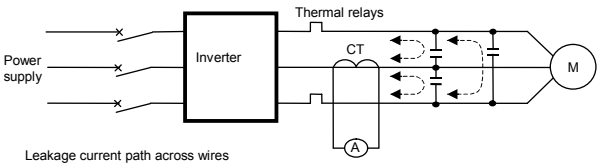

(1) Thermal relays

The high frequency component of current leaking into electrostatic capacity between inverter output wires will increase the effective current values and make externally connected thermal relays operate improperly. If the wires are more than 50 meters long, it will be easy for the external thermal relay to operate improperly with models having motors of low rated current (several A(ampere) or less), because the leakage current will increase in proportion to the motor rating.

Remedies:

1. Use the electronic thermal built into the inverter. (Refer to section 5.6)
   The setting of the electronic thermal is done using parameter OLM, tHr.
2. Reduce the inverter's PWM carrier frequency. However, that will increase the motor's magnetic noise.
   The setting of PWM carrier frequency is done with the parameter F300. (Refer to section 6.18)
3. This can be improved by installing 0.1μ to 0.5μF - 1000V film capacitor to the input/output terminals of each phase in the thermal relay.

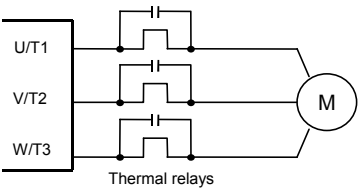

(2) CT and ammeter

If a CT and ammeter are connected externally to detect inverter output current, the leak current's high frequency component may destroy the ammeter. If the wires are more than 50 meters long, it will be easy for the high frequency component to pass through the externally connected CT and be superimposed on and burn the ammeter with models having motors of low rated current (several A (ampere) or less), especially the 500V class low capacity (4.0kW or less) models, because the leakage current will increase in proportion to the motor's rated current.

Be sure to set the inverter's PWM carrier frequency to 5 kHz or less. However, that will increase the

motor's magnetic noise. The setting of PWM carrier frequency is done with the parameter F300 (Refer to section 6.18).

Remedies:

1. Use a meter output terminal in the inverter control circuit.
   The load current can be output on the meter output terminal (FM). If the meter is connected, use an ammeter of 1mAdc full scale or a voltmeter of 10V full scale.
   0-20mAdc (4-20mAdc) can be also output. (Refer to section 5.1)
2. Use the monitor functions built into the inverter.
   Use the monitor functions on the panel built into the inverter to check current values. (Refer to section 8.2.1)

1.4.4 Installation

■ Installation environment

This inverter is an electronic control instrument. Take full consideration to installing it in the proper operating environment.

⚠ Warning	
Prohibited	• Do not place any inflammable substances near the inverter. If an accident occurs in which flame is emitted, this could lead to fire. • Do not install in any location where the inverter could come into contact with water or other fluids. This can result in electric shock or fire.
Mandatory action	• Operate under the environmental conditions prescribed in the instruction manual. Operations under any other conditions can result in malfunction. • Check to make sure that the input power voltage is +10%, -15% of the rated power voltage (±10% when the load is 100% in continuous operation) written on the name plate. If the input power voltage is not +10%, -15% of the rated power voltage (±10% when the load is 100% in continuous operation), this can result in fire.

⚠ Caution	
Prohibited	• Do not install the inverter in any location subject to large amounts of vibration. This could cause the unit to fall, resulting in bodily injury.

- Do not install in any location of high temperature, high humidity, moisture condensation and freezing and avoid locations where there is exposure to water and/or where there may be large amounts of dust, metallic fragments and oil mist.
- Do not install in any location where corrosive gases or grinding fluids are present.

- Operate in areas where ambient temperature ranges from -10°C to 60°C.
  When using the inverter in locations with temperatures above 40°C, remove the protective label on the top of the inverter and use the inverter with the output current reduced according to section 6.18.

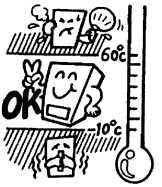

[Position for measuring ambient temperature]

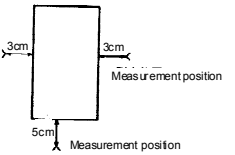

Note: The inverter is a heat-emitting body. Make sure proper space and ventilation is provided when installing in the cabinet.

- Do not install in any location that is subject to large amounts of vibration.

Note: If the inverter is installed in a location that is subject to vibration, anti-vibration measures are required. Please consult with Toshiba about these measures.

- If the inverter is installed near any of the equipment listed below, provide measures to insure against errors in operation.

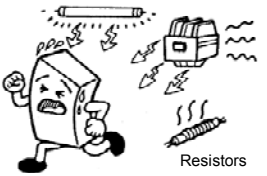

Solenoids:	Attach surge suppressor on coil.
Brakes:	Attach surge suppressor on coil.
Magnetic contactors:	Attach surge suppressor on coil.
Fluorescent lights:	Attach surge suppressor on coil.
Resistors:	Place far away from the inverter.

■ How to install

⚠ Warning	
Prohibited	• Do not install or operate the inverter if it is damaged or any component is missing. This can result in electric shock or fire. Call your Toshiba distributor for repairs.
Mandatory action	• Mount the inverter on a metal plate. The rear panel gets very hot. Do not install in an inflammable object, this can result in fire. • Do not operate with the terminal block cover removed. This can result in electric shock. • An emergency stop device must be installed that fits with system specifications (e.g. shut off input power then engage mechanical brake). Operation cannot be stopped immediately by the inverter alone, thus, resulting in an accident or injury. • All options used must be those specified by Toshiba. The use of any other option will result in an accident.

⚠ Caution	
Mandatory action	• The main unit must be installed on a base that can bear the unit's weight. If the unit is installed on a base that cannot withstand that weight, the unit can fall, resulting in injury. • If braking is necessary (to hold motor shaft), install a mechanical brake. The brake on the inverter will not function as a mechanical hold, and if used for that purpose, injury will result.

(1) Normal installation

Select an indoor location with good ventilation, and then install it upright on a flat metal plate.

When installing multiple inverters, leave at least 3 cm of space between each inverter and install them aligned horizontally.

When using the inverter in locations with temperatures above 40°C, remove the protective label on the top of the inverter and use the inverter with the output current reduced according to section 6.18.

(2) Side-by-side installation

To align the inverters side-by-side horizontally, remove the protective label on the top of the inverter before use. When using the inverter in locations with temperatures above 40°C, use the inverter with the output current reduced.

If the door is opened 90° or more, please open the door with the left side inverter's door open when the same capacity inverters are installed with side-by-side.

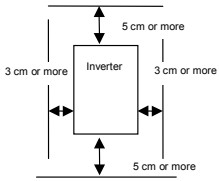

Normal installation

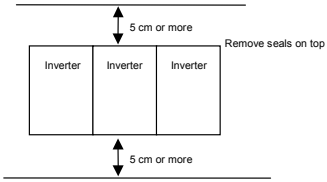

Side-by-side installation

The space shown in the diagram is the minimum allowable space. Because air cooled equipment has cooling fans built in on the top or bottom surfaces, make the space on top and bottom as large as possible to allow for air passage.

Note: Do not install in any location where there is high humidity or high temperatures and where there are large amounts of dust, metallic fragments and oil mist.

■ Calorific values of the inverter and the required ventilation

About 5% of the rated power of the inverter will be lost as a result of conversion from AC to DC or from DC to AC. In order to suppress the rise in temperature inside the cabinet when this loss becomes heat loss, the interior of the cabinet must be ventilated and cooled.

The amount of forcible air-cooling ventilation required and the necessary heat discharge surface quantity when operating in a sealed cabinet according to motor capacity are as follows.

Voltage class	Inverter type		Calorific values (W) Note 1)		Amount of forcible air cooling ventilation required (m^3/min)		Heat discharge surface area required for sealed storage cabinet (m^3)		Standby power requirement (W) Note 2)
			4kHz	12kHz	4kHz	12kHz	4kHz	12kHz	
Three-phase 240V class	VFS15-	2004PM-W	35	40	0.20	0.23	0.70	0.80	6
		2007PM-W	45.6	50	0.26	0.28	0.91	0.99	6
		2015PM-W	81	92	0.46	0.52	1.61	1.85	10
		2022PM-W	94.9	104	0.54	0.59	1.90	2.07	10
		2037PM-W	139	154	0.79	0.87	2.77	3.08	11
		2055PM-W	256	283	1.45	1.61	5.12	5.66	22
		2075PM-W	305	367	1.73	2.08	6.10	7.34	22
		2110PM-W	475	538	2.70	3.05	9.50	10.76	31
		2150PM-W	557	628	3.16	3.56	11.14	12.56	31
Single-phase 240V class	VFS15S-	2002PL-W	23	24.8	0.13	0.14	0.46	0.50	5
		2004PL-W	37	42.2	0.21	0.24	0.74	0.84	5
		2007PL-W	46	50	0.26	0.28	0.92	1.00	5
		2015PL-W	79	90	0.45	0.51	1.57	1.80	8
		2022PL-W	101	110	0.58	0.62	2.03	2.20	8
Three-phase 500V class	VFS15-	4004PL-W	30	39	0.17	0.22	0.61	0.78	12
		4007PL-W	39	50	0.22	0.28	0.78	1.00	12
		4015PL-W	58	76	0.33	0.43	1.15	1.53	12
		4022PL-W	77	102	0.44	0.58	1.53	2.04	13
		4037PL-W	131	156	0.75	0.88	2.63	3.12	13
		4055PL-W	211	263	1.20	1.49	4.22	5.26	22
		4075PL-W	254	346	1.44	1.96	5.08	6.92	22
		4110PL-W	387	470	2.20	2.67	7.74	9.40	31
		4150PL-W	466	572	2.65	3.25	9.32	11.44	31

Note 1) Case of 100% Load Continuation operation. The heat loss for the optional external devices (input AC reactor, radio noise reduction filters, etc.) is not included in the calorific values in the table

Note 2) It is power consumption when power is on but is not output (0Hz), and cooling fan is activated (model with cooling fan).

■ Panel designing taking into consideration the effects of noise

The inverter generates high frequency noise. When designing the control panel setup, consideration must be given to that noise. Examples of measures are given below.

- Wire so that the main circuit wires and the control circuit wires are separated. Do not place them in the same conduit, do not run them parallel, and do not bundle them.
- Provide shielding and twisted wire for control circuit wiring.
- Separate the input (power) and output (motor) wires of the main circuit. Do not place them in the same conduit, do not run them parallel, and do not bundle them.
- Ground the inverter grounding terminals (⏚).
- Install surge suppressor on any magnetic contactor and relay coils used around the inverter.
- Install noise filters if necessary.
- To comply with the EMC directives, install the optional EMC plate and fix the shield to it.
- Install EMC plate and use shielded wires.

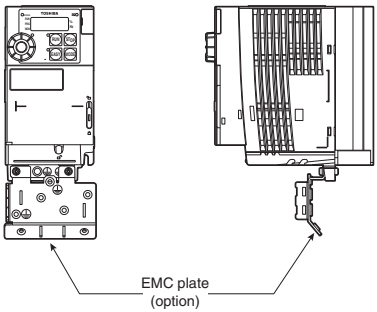

■ Installing more than one unit in a cabinet

When two or more inverters are installed in one cabinet, pay attention to the followings.

- Inverters may be installed side by side with each other with no space left between them.
  When installing inverters side by side, remove the protective label on the top of the inverter.
  When using the inverter in locations with temperatures above 40°C, use the inverter with the output current reduced.
- Ensure a space of at least 20 centimeters on the top and bottom of the inverters.
- Install an air deflecting plate so that the heat rising up from the inverter on the bottom does not affect the inverter on the top.

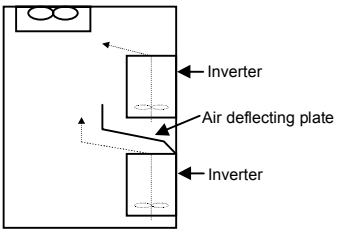

2. Connection

Warning	
Disassembly prohibited	• Never disassemble, modify or repair. This can result in electric shock, fire and injury. Call your Toshiba distributor for repairs.
Prohibited	• Do not stick your fingers into openings such as cable wiring holes and cooling fan covers. This can result in electric shock or other injury. • Do not place or insert any kind of object (electrical wire cuttings, rods, wires) into the inverter. This can result in electric shock or fire. • Do not allow water or any other fluid to come in contact with the inverter. This can result in electric shock or fire.

Caution	
Prohibited	• When transporting or carrying, do not hold by the front panel covers. The covers will come off and the unit will drop, resulting in injury.

2.1 Cautions on wiring

Warning	
Prohibited	• Never remove the terminal cover when power is on. The unit contains many high voltage parts and contact with them will result in electric shock.
Mandatory action	• Turn the power on only after attaching the terminal block cover. If the power is turned on without the terminal block cover attached, this can result in electric shock or other injury. • Electrical construction work must be done by a qualified expert. Connection of input power by someone who does not have that expert knowledge can result in fire or electric shock. • Connect output terminals (motor side) correctly. If the phase sequence is incorrect, the motor will operate in reverse and that can result in injury. • Wiring must be done after installation. If wiring is done prior to installation, that can result in injury or electric shock. • The following steps must be performed before wiring. (1) Shut off all input power. (2) Wait at least 15 minutes and check to make sure that the charge lamp is no longer lit. (3) Use a tester that can measure DC voltage (400VDC or 800VDC or more), and check to make sure that the voltage to the DC main circuits (across PA/+ - PC/-) is 45V or less. If these steps are not properly performed, the wiring will cause electric shock. • Tighten the screws on the terminal block to specified torque. If the screws are not tightened to the specified torque, it can lead to fire.

Warning	
Be Grounded	• Ground must be connected securely. If the ground is not securely connected, it could lead to electric shock or fire.

Caution	
Prohibited	• Do not attach devices with built-in capacitors (such as noise filters or surge absorber) to the output (motor side) terminal. This could cause a fire.

■ Preventing radio noise

To prevent electrical interference such as radio noise, separately bundle wires to the main circuit's power terminals (3-phase models: R/L1, S/L2, T/L3, single-phase models: R/L1, S/L2/N) and wires to the motor terminals (U/T1, V/T2, W/T3).

■ Control and main power supply

The control power supply and the main circuit power supply for this inverter are the same.
If a malfunction or trip causes the main circuit to be shut off, control power will also be shut off. When checking the cause of the malfunction or the trip, use the trip holding retention selection parameter.
In addition, please use an optional control power supply backup unit when only control power supply operates, even if the main circuit is shut off due to trouble or tripping.

■ Wiring

- Because the space between the main circuit terminals is small, use sleeved crimp-style terminals for the connections. Connect the terminals so that adjacent terminals do not touch each other.
- For grounding terminal ⏚ use wires of the size that is equivalent to or larger than those given in table 10.1 and always ground the inverter (240V voltage class: D type ground, 500V voltage class: C type ground).
  Use as large and short a grounding wire as possible and wire it as close as possible to the inverter.
- For the sizes of electric wires used in the main circuit, refer to the table in section 10.1.
- The length of each wire does not exceed 30 meters. If the wire is longer than 30 meters, the wire size (diameter) must be increased.

2.2 Standard connections

⚠ Warning	
Prohibited	• Do not connect input power to the output (motor side) terminals (U/T1, V/T2, W/T3). Connecting input power to the output could destroy the inverter or cause a fire. • Do not insert a braking resistor between DC terminals (between PA/+ and PC/- or PO and PC/-). It could cause a fire. • First shut off input power and wait at least 15 minutes before touching terminals and wires on equipment (MCCB) that is connected to inverter power side. Touching the terminals and wires before that time could result in electric shock. • Do not shut down the external power supply on ahead when VIA terminal is used as logic input terminal by external power supply. It could cause unexpected result as VIA terminal is ON status.
Mandatory action	• Set a parameter F109 when VIA or VIB terminals are used as logic input terminal. If it is not set, it could result in malfunction. • Set a parameter F147 when S3 terminal is used as PTC input terminal. If it is not set, it could result in malfunction.
Be Grounded	• Ground must be connected securely. If the ground is not securely connected, it could lead to electric shock or fire.

2.2.1 Standard connection diagram 1

This diagram shows a standard wiring of the main circuit.

Standard connection diagram - SINK (Negative) (common:CC)

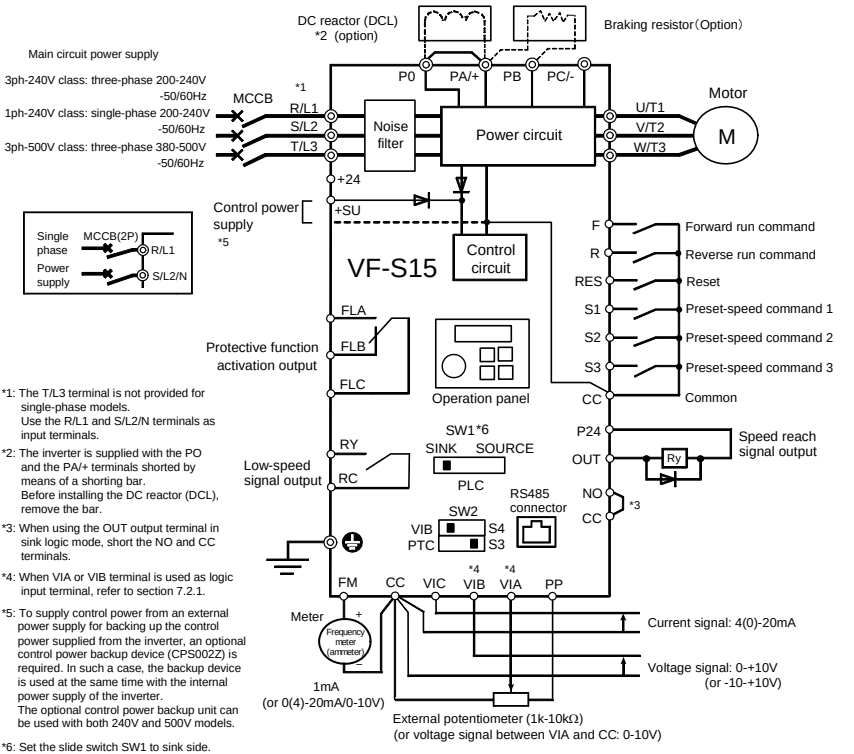

*1: The T/L3 terminal is not provided for single-phase models.
Use the R/L1 and S/L2/N terminals as input terminals.

*2: The inverter is supplied with the PO and the PA/+ terminals shorted by means of a shorting bar.
Before installing the DC reactor (DCL), remove the bar.

*3: When using the OUT output terminal in sink logic mode, short the NO and CC terminals.

*4: When VIA or VIB terminal is used as logic input terminal, refer to section 7.2.1.

*5: To supply control power from an external power supply for backing up the control power supplied from the inverter, an optional control power backup device (CPS002Z) is required. In such a case, the backup device is used at the same time with the internal power supply of the inverter.
The optional control power backup unit can be used with both 240V and 500V models.

*6: Set the slide switch SW1 to sink side.
Refer to page B-11,12 for details.
Default setting is PLC side.

2.2.2 Standard connection diagram 2

Standard connection diagram - SOURCE (Positive) (common:P24)

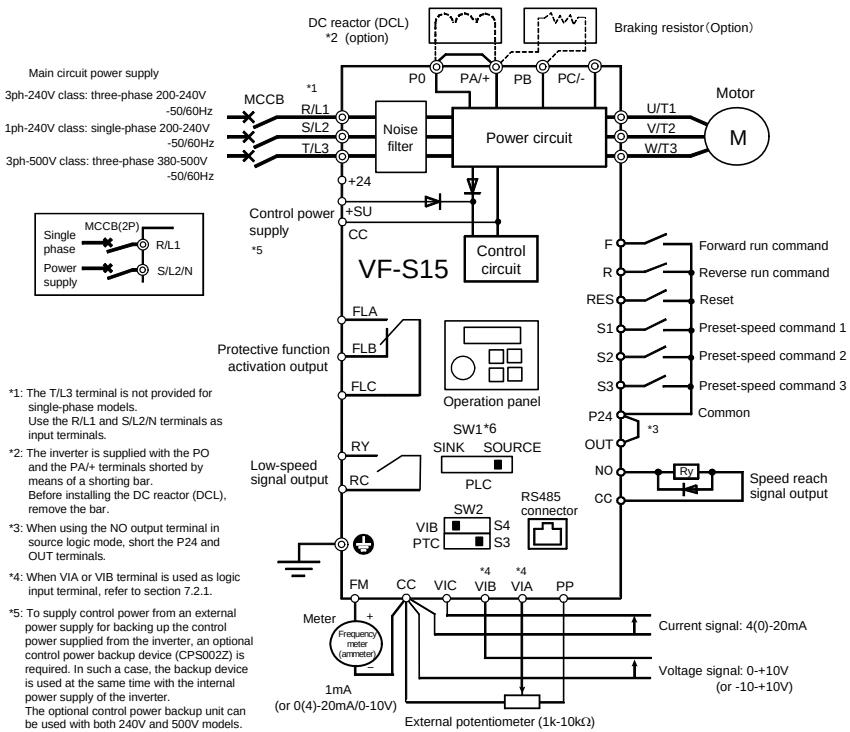

*1: The T/L3 terminal is not provided for single-phase models.
Use the R/L1 and S/L2/N terminals as input terminals.

*2: The inverter is supplied with the PO and the PA/+ terminals shorted by means of a shorting bar.
Before installing the DC reactor (DCL), remove the bar.

*3: When using the NO output terminal in source logic mode, short the P24 and OUT terminals.

*4: When VIA or VIB terminal is used as logic input terminal, refer to section 7.2.1.

*5: To supply control power from an external power supply for backing up the control power supplied from the inverter, an optional control power backup device (CPS002Z) is required. In such a case, the backup device is used at the same time with the internal power supply of the inverter.
The optional control power backup unit can be used with both 240V and 500V models.

*6: Set the slide switch SW1 to source side.
Refer to page B-11,12 for details.
Default setting is PLC side.

2.3 Description of terminals

2.3.1 Power circuit terminals

■ Connections with peripheral equipment

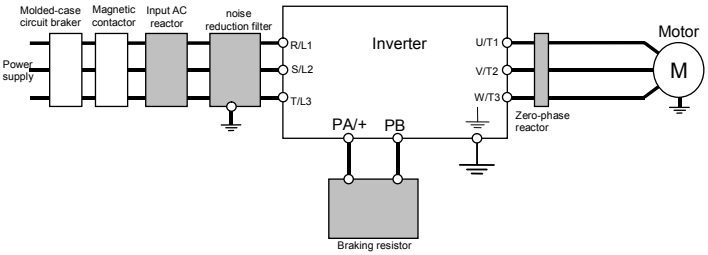

Note 1: The T/L3 terminal is not provided for any single-phase models. So if you are using single-phase models, use the R/L1 and S/L2/N terminals to connect power cables.

■ Power circuit

Terminal symbol	Terminal function
⏚	Grounding terminal for connecting inverter. There are 3 terminals in cooling fin or mounting part of EMC plate.
R/L1,S/L2,T/L3	240V class : Three-phase 200 to 240V-50/60Hz : Single-phase 200 to 240V-50/60Hz 500V class : Three-phase 380 to 500V-50/60Hz * Single-phase inputs are R/L1 and S/L2/N terminals.
U/T1,V/T2,W/T3	Connect to three-phase motor.
PA/+, PB	Connect to braking resistors. Change parameters F304, F305, F308, F309 if necessary.
PA/+	This is a positive potential terminal in the internal DC main circuit. DC common power can be input between PA/- terminal and PC/- terminal.
PC/-	This is a negative potential terminal in the internal DC main circuit. DC common power can be input between PC/- terminal and PA/+ terminal.
PO, PA/+	Terminals for connecting a DC reactor (DCL: optional external device). Shorted by a Shorting-bar when shipped from the factory. Before installing DCL, remove the shorting- bar.

The arrangements of power circuit terminals are different from each range.
Refer to section 1.3.3.1) for details.

2.3.2 Control circuit terminals

The control circuit terminal block is common to all equipment.
Regarding to the function and specification of each terminal, please refer to the following table.
Refer to section 1.3.3.3) about the arrangement of control circuit terminals.

■ Control circuit terminals

Terminal symbol	Input / output	Function		Electrical specifications	Inverter internal circuits
F	Input	Multifunction programmable logic input	Shorting across F-CC or P24-F causes forward rotation; open causes deceleration stop. (When Standby ST is always ON) 3 different functions can be assigned.	No voltage logic input 24Vdc-5mA or less	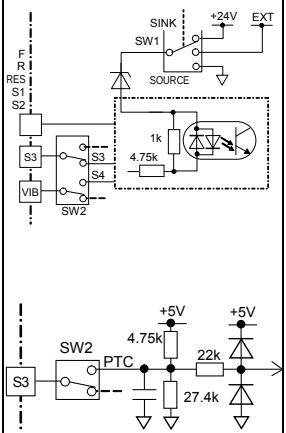
R	Input		Shorting across R-CC or P24-R causes reverse rotation; open causes deceleration stop. (When Standby ST is always ON) 3 different functions can be assigned.		
RES	Input		This inverter protective function is reset if RES-CC or P24-RES is connected. Shorting RES-CC or P24-RES has no effect when the inverter is in a normal condition. 2 different functions can be assigned.	Sink/Source and PLC selectable using slide switch SW1 (Default setting is PLC side)	
S1	Input		Shorting across S1-CC or P24-S1 causes preset speed operation. 2 different functions can be assigned.	Pulse train input (S2 terminal) Pulse frequency range: 10pps~2kpps Duty: 50±10%	
S2	Input		Shorting across S2-CC or P24-S2 causes preset speed operation. By changing parameter F146 setting, this terminal can also be used as a pulse train input terminal.		
S3	Input		Shorting across S3-CC or P24-S3 causes preset speed operation. By changing slide switch SW2 and parameter F147 setting, this terminal can also be used as a PTC input terminal.	PTC input (S3 terminal)	

Terminal symbol	Input / output	Function	Electrical specifications	Inverter internal circuits
CC	Common to Input / output	Control circuit's equipotential terminal (3 terminals)		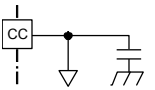
PP	Output	Analog power supply output	10Vdc (permissible load current: 10mAdc)	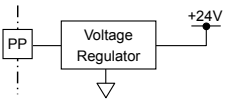
V I A Note 1)	Input	Multifunction programmable analog input. Default setting: 0-10Vdc (1/1000 resolution) and 0-60Hz (0-50Hz) frequency input (1/2000 resolution). By changing parameter F 109, this terminal can also be used as a multifunction programmable logic input terminal.	10Vdc (internal impedance: 30kΩ)	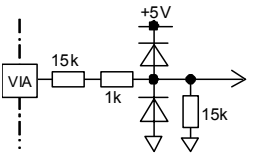
V I B Note 1)	Input	Multifunction programmable analog input. Default setting: 0-10Vdc (1/1000 resolution) and 0-60Hz (0-50Hz) frequency input. The function can be changed to -10-+10V input by parameter F 107 = 1 setting. By switching slide switch SW2 and changing parameter F 109 setting, this terminal can also be used as a multifunction programmable logic input terminal.	10Vdc (internal impedance: 30kΩ)	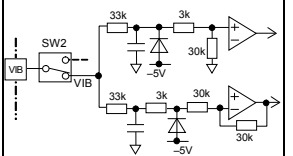
V I C	Input	Multifunction programmable analog input. 4-20mA (0-20mA) input.	4-20mA (internal impedance: 250Ω)	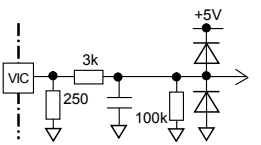

Terminal symbol	Input / output	Function	Electrical specifications	Inverter internal circuits
FM	Output	Multifunction programmable analog output. Default setting: output frequency. The function can be changed to meter option (0-1mA), 0-10Vdc voltage, or 0-20mAdc (4-20mA) current output by parameter F681 setting. Resolution Max. 1/1000.	1mAdc full-scale ammeter or QS60T(option) 0-20mA (4-20mA) DC ammeter Permissible load resistance: 600Ω or less 0-10V DC volt meter Permissible load resistance: 1kΩ or more	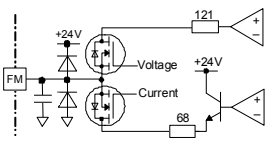
P24	Output	24Vdc power output	24Vdc-100mA Note 2)	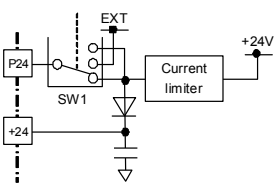
	Input	This terminal can be used as a common terminal when an external power supply is used by changing SW1 to PLC side.	-	
+24	Output	24Vdc power output	24Vdc-100mA Note 2)	
+SU	Input	DC power input terminal for operating the control circuit. Connect a control power backup device (option or 24Vdc power supply) between +SU and CC.	Voltage: 24Vdc±10% Current: 1A or more	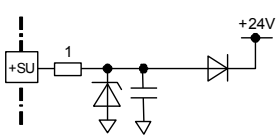

Terminal symbol	Input / output	Function	Electrical specifications	Inverter internal circuits
OUT NO	Output	Multifunction programmable open collector output. Default setting detect and output speed reach signal. Multifunction output terminals to which two different functions can be assigned. The NO terminal is an equipotential terminal. It is isolated from the CC terminal. By changing parameter F669 settings, these terminals can also be used as multifunction programmable pulse train output terminals.	Open collector output 24Vdc-100mA To output pulse trains, a current of 10mA or more needs to be passed. Pulse frequency range: 10~2kpps	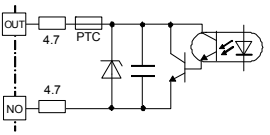
FLA FLB FLC Note 3)	Output	Multifunction programmable relay contact output. Detects the operation of the inverter's protection function. Contact across FLA-FLC is closed and FLB-FLC is opened during protection function operation.	Max. switching capacity 250Vac-2A, 30Vdc-2A (cosϕ=1) : at resistive load 250Vac-1A (cosϕ=0.4)	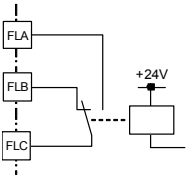
RY RC Note 3)	Output	Multifunction programmable relay contact output. Default settings detect and output low-speed signal output frequencies. Multifunction output terminals to which two different functions can be assigned.	30Vdc-1A (L/R=7ms) Min. permissible load 5Vdc-100mA 24Vdc-5mA	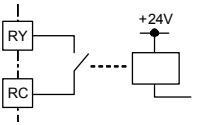

Note 1) When VIA terminal is used as logic input terminal, be sure to connect a resistor between P24 and VIA in case of sink logic, between VIA and CC in case of source logic. (Recommended resistance: 4.7kΩ-1/2W)
It is not needed for VIB terminal.

Note 2) 100mA is the sum of P24 and +24.

Note 3) A chattering (momentary ON/OFF of contact) is generated by external factors of the vibration and the impact, etc. In particular, please set the filter of 10ms or more, or timer for measures when connecting it directly with input unit terminal of programmable controller. Please use the OUT terminal as much as possible when the programmable controller is connected.

■ Connection of SINK (Negative) logic/SOURCE (Positive) logic (When the inverter's internal power supply is used)

Current flowing out turns control input terminals on. These are called sink logic terminals.
The general used method in Europe is source logic in which current flowing into the input terminal turns it on.
Sink logic is sometimes referred to as negative logic, and source logic is referred to as positive logic.
Each logic is supplied with electricity from either the inverter's internal power supply or an external power supply, and its connections vary depending on the power supply used.
Sink/source logic can be switched by slide switch SW1.

<Examples of connections when the inverter's internal power supply is used>

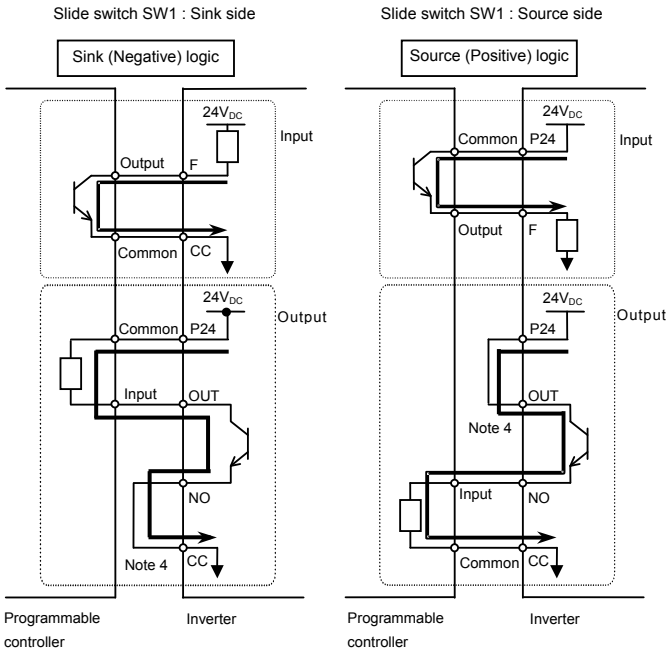

Note 4: Be sure to connect NO and CC terminals for Sink logic.
Be sure to connect P24 and OUT terminals for Source logic.

■ SINK (Negative)/ SOURCE (Positive) logic connection (When an external power supply is used)

The P24 terminal is used to connect to an external power supply or to separate a terminal from other input or output terminals.

<Examples of connections when an external power supply is used>

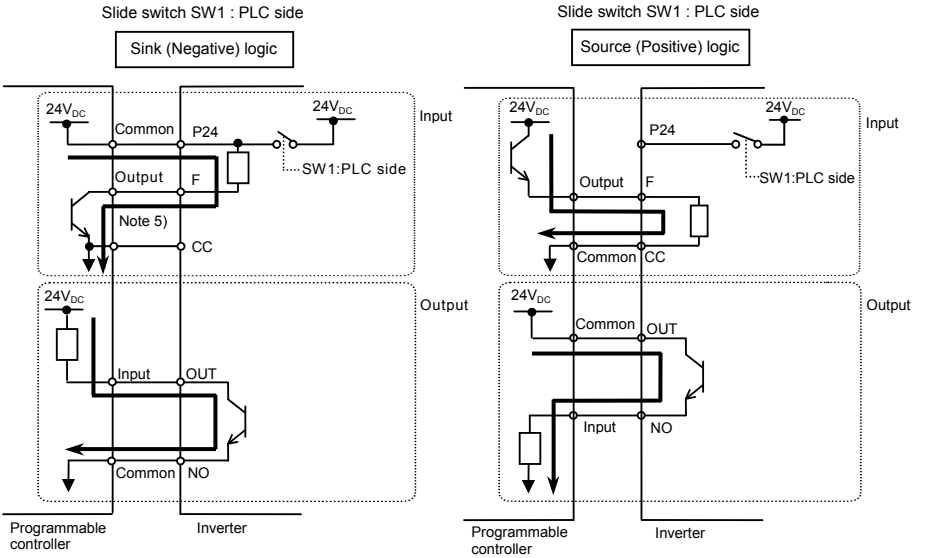

Note 5) Be sure to connect 0V of external power supply and CC terminal of the inverter.

Note 6) Do not shut down the external power supply on ahead when VIA terminal is used as logic input terminal by external power supply in SINK logic connection. It could cause unexpected result as VIA terminal is ON status.

■ Switching of slide switch

Refer to section 1.3.3 3) about location of slide switch.

(1) Switching of sink/source logic: SW1 (Default setting : PLC side)
Setting of sink/source logic for F, R, RES, S1, S2, and S3 terminals are switched by slide switch SW1.
When an external power supply is used for sink logic, set the slide switch SW1 to PLC side.
Set the sink/source logic switching before turn on power supply.
After confirming the right for sink/sink/source setting, turn on power supply.

(2) Switching of VIB terminal function: Upper SW2 (Default setting: VIB side)
Setting of analog input/ logic input for VIB terminal is switched by upper slide switch SW2 and parameter F109.
When using VIB terminal as an analog input terminal, set the slide switch to VIB side and set the parameter F109=0.
When using VIB terminal as a logic input terminal, set the slide switch to S4 side and set the parameter any value to F109= 1, 3, or 4. Sink/ source logic depends on the slide switch SW1.
Match the setting of upper slide switch SW2 and parameter F109 surely.
If it is not, this can result in malfunction.

(3) Switching of S3 terminal function: Lower SW2 (Default setting: S3 side)
Setting of logic input/ PTC input for S3 terminal is switched by lower slide switch SW2 and parameter F147.
When using S3 terminal as a logic input terminal, set the slide switch to S3 side and set the parameter F147=0.
When using S3 terminal as a PTC input terminal, set the slide switch to PTC side and set the parameter F147= 1.
Match the setting of lower slide switch SW2 and parameter F147 surely.
If it is not, this can result in malfunction.

3. Operations

Warning	
Prohibited	• Do not touch inverter terminals when electrical power is going to the inverter even if the motor is stopped. Touching the inverter terminals while power is connected to it will result in electric shock. • Do not touch switches when the hands are wet and do not try to clean the inverter with a damp cloth. Such practices will result in electric shock. • Do not go near the motor in alarm-stop status when the retry function is selected. The motor will suddenly restart and that could result in injury. Take measures for safety, e.g. attaching a cover to the motor, against accidents when the motor unexpectedly restarts.
Mandatory action	• If the inverter begins to emit smoke or an unusual odor, or unusual sounds, immediately turn the power off. Continuous use of the inverter in such a state will cause fire. Call your Toshiba distributor for repairs. • Always turn the power off if the inverter is not used for long periods of time since there is a possibility of malfunction caused by leaks, dust and other material. If power is left on with the inverter in that state, it can result in fire. • Turn the input power on only after attaching the terminal block cover. When enclosed inside a cabinet and used with the terminal block cover removed, always close the cabinet doors first and then turn the power on. If the power is turned on with the terminal block cover or the cabinet doors open, this can result in electric shock. • Make sure that operation signals are off before resetting the inverter after malfunction. If the inverter is reset before turning off the operating signal, the motor can restart suddenly, resulting in injury.

Caution	
Contact prohibited	• Do not touch heat radiating fins or discharge resistors. These devices are hot, and you'll get burned if you touch them.
Prohibited	• Observe all permissible operating ranges of motors and mechanical equipment. (Refer to the motor's instruction manual.) Not observing these ranges will result in injury.

3.1 How to Set the Setup Menu

⚠ Warning	
Mandatory action	• If incorrect setting, the drive will have some damage or unexpected movement. Be sure to set the setup menu correctly.

Set the setup menu according to the base frequency and the base frequency voltage of the motor connected. (If you are not sure which region code of setup menu should be selected and what values should be specified, consult your Toshiba distributer.)
Each setup menu automatically sets all parameters relating to the base frequency and the base frequency voltage of the motor connected. (See the table on the following page.)

Follow these steps to change the setup menu [Example: Selecting a region code to EU]

Panel operated	LED display	Operation
	SEt	SEt is blinking
	EU, JP, ASIA, USA	Turn the setting dial, and select region code "EU" (Europe).
	EU⇔In It	Press the center of the setting dial to determine the region.
	0.0	The operation frequency is displayed (Standby).

- If you want to change the selected region by the setup menu, the setup menu will appear by the following settings. Please note, however, that all setting parameters return to status of default setting and the trip history data is cleard.
  - Set parameter SEt to "0".
  - Set parameter tYP to " 13".
- The parameter settings in the table on the following page can be changed individually even after they are selected in the setup menu.

■ Values set by each setup parameter

Title	Function		EU (Mainly in Europe)	USA (Mainly in North America)	ASIA (Mainly in Asia, Oceania) Note 1)	JP (Mainly in Japan)
UL/uL/170/ F204/F213/ F219/F330/ F367/F814	Frequency		50.0(Hz)	60.0(Hz)	50.0(Hz)	60.0(Hz)
uLu/ F171	Base frequency voltage 1, 2	240V class	230(V)	230(V)	230(V)	200(V)
		500V class	400(V)	460(V)	400(V)	400(V)
Pt	V/F control mode selection		0	0	0	2
F307	Supply voltage correction (output voltage limitation)		2	2	2	3
F319	Regenerative over-excitation upper limit		120	120	120	140
F417	Motor rated speed		1410(min^{-1})	1710(min^{-1})	1410(min^{-1})	1710(min^{-1})

Note 1) Excludes Japan.

Note 2) Slide switch SW1 is set to PLC side at default setting. Set it appropriately according to the logic used.
Refer to page B-11 to 13 for details.

3.2 Simplified Operation of the VF-S15

Operation command and Operation frequency command are necessary to operate the inverter.
Operation method and operation frequency setting can be selected from the following.
At default setting, the inverter runs and stops with RUN/STOP key on the panel keypad, and frequency can be set with the setting dial.

Run / Stop	: (1) Run and stop using the panel keypad (2) Run and stop using external signals
Setting the frequency	: (1) Setting using setting dial (2) Setting using external signals (0-10Vdc, 4-20mAdc, -10-+10Vdc)

Use the basic parameters CMOd (command mode selection) and FMOd (frequency setting mode selection) for selection.

[Parameter setting]

Title	Function	Adjustment range	Default setting
CMOd	Command mode selection	0: Terminal block 1: Panel keypad (including extension panel) 2: RS485 communication 3: CANopen communication 4: Communication option	1
FMOd	Frequency setting mode selection 1	0: Setting dial 1(save even if power is off) 1: Terminal VIA 2: Terminal VIB 3: Setting dial 2(press in center to save) 4: RS485 communication 5: UP/DOWN from external logic input 6: CANopen communication 7: Communication option 8: Terminal VIC 9, 10: - 11: Pulse train input 12, 13: - 14: Sr0	0

- FMOd=0 (setting dial 1) is the mode that after the frequency is set by the setting dial or an extension panel, the frequency is saved even if the power is turned off. The usage of this setting dial is similar to that of potentiometer.
- Refer to section 6.2.1 for details about FMOd=4 to 7, 11, and 14.

3.2.1 How to run and stop

[Example of CMOd setting procedure]

Panel operation	LED display	Operation
	0.0	Displays the output frequency (operation stopped). (When standard monitor display selection F710=0 [output frequency])
MODE	AUH	Displays the first basic parameter [History (AUH)].
	CMOd	Turn the setting dial, and select "CMOd".
	1	Press the center of the setting dial to read the parameter value. (Standard default: 1).
	0	Turn the setting dial to change the parameter value to 0 (terminal block).
	0⇔CMOd	Press the center of the setting dial to save the changed parameter. CMOd and the parameter set value are displayed alternately.

(1) Run and stop using the panel keypad (CMOd= 1)

Use the RUN and STOP keys on the panel keypad to start and stop the motor.

RUN : Motor runs. STOP : Motor stops.

- The direction of rotation is determined by the setting of parameter Fr (forward run, reverse run selection). (0: forward run, 1: reverse run)
- Forward run and reverse run are switchable with the extension panel (option). Set the parameter Fr (forward run, reverse run selection) to 2 or 3. (Refer to section 5.8)

(2) RUN and STOP using external signals (CMOd=0): Sink (Negative) logic

Use external signals to the inverter terminal block to start and stop the motor.

Short F and CC terminals: run forward

Open F and CC terminals: slow down and stop

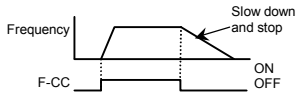

(3) Coast stop

Assign parameters as described below in case of Coast stop. Inverter will display OFF at Coast stop.

1) Assign "6 (ST)" to an input terminal. Set parameter F110=0. Open the ST-CC for coast stop(see the status described on the right).
2) Assign "96 (FRR)" to an input terminal.
Coast stop is done by shorting FRR and CC.

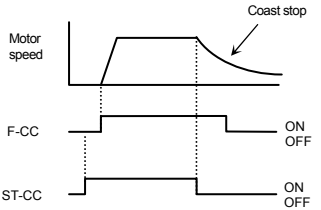

3.2.2 How to set the frequency

[Example of FMOd setting procedure] FMOd= 1: Setting the frequency by the terminal VIA

Panel operation	LED display	Operation
	0.0	Displays the output frequency (operation stopped). (When standard monitor display selection F710=0 [output frequency])
MODE	AUX	Displays the first basic parameter [History (AUX)].
	FMOd	Turn the setting dial, and select "FMOd".
	0	Press the center of the setting dial to read the parameter value. (Standard default: 0).
	1	Turn the setting dial to change the parameter value to 1 (terminal block VIA).
	1⇔FMOd	The parameter value is written. FMOd and the parameter value are displayed alternately several times.

* Pressing the MODE key twice returns the display to standard monitor mode (displaying output frequency).

(1) Setting using the keypad (including extension panel option) (FMOd=0 or 3)

: Moves the frequency up : Moves the frequency down

■ Example of operating from the panel (FMOd=3: press in center to save)

Panel operation	LED display	Operation
	0.0	Displays the output frequency. (When standard monitor display selection F710=0 [output frequency])
	50.0	Set the output frequency. (The frequency will not be saved if the power is turned off in this state.)
	50.0⇔FC	Save the output frequency. FC and the frequency are displayed alternately.

■ Example of operating from the panel (FMOd=0: save even if power is off)

Panel operation	LED display	Operation
	0.0	Display the output frequency. (When standard monitor display selection is set as F710=0 [output frequency])
	60.0	Set the output frequency.
-	60.0	The frequency will be saved when the power is turned off in this state.

(2) Setting of frequency using external signals to terminal block (FMOd= 1, 2 or 8)
⇒ Refer to section 7.3 for details.

(3) Switching two frequency commands ⇒ Refer to section 5.8 for details.

3.3 How to operate the VF-S15

Overview of how to operate the inverter with simple examples

Ex.1 Operation Command: Panel Operation
Frequency Command: Setting Dial 1

(1) Wiring

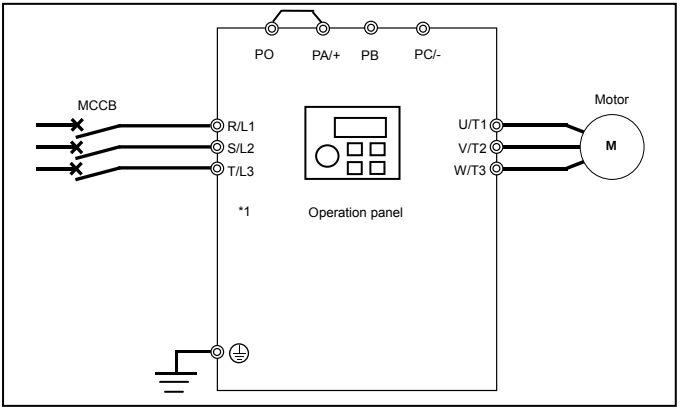

(2) Parameter setting (default setting)

Title	Function	Setting value
CMOd	Command mode selection	1
FMOd	Frequency setting mode selection 1	0

(3) Operation

Run/stop: Press the RUN and STOP keys on the panel.

Frequency setting: Turn the setting dial to set the frequency. The frequency setting is saved just by turning the setting dial.

*1: Single-phase models are R/L1 and S/L2/N.

Ex.2 Operation Command : Panel Operation
Frequency Command: Setting Dial 2

(1) Wiring

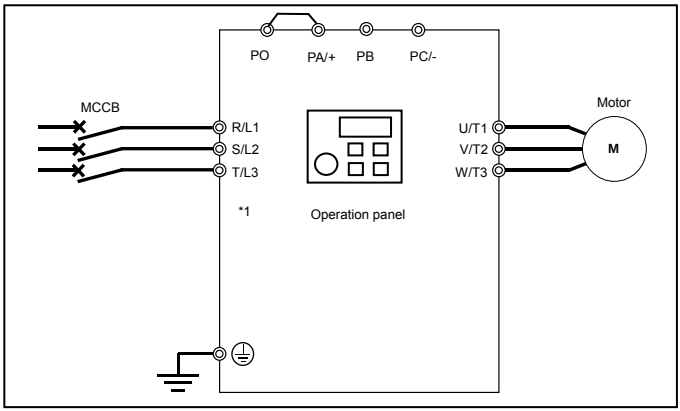

(2) Parameter setting

Title	Function	Setting value
CMOd	Command mode selection	1
FMOd	Frequency setting mode selection 1	3

(3) Operation

Run/stop: Press the RUN and STOP keys on the panel.

Frequency setting: Turn the setting dial to set the frequency.
To save the frequency setting, press the center of the setting dial.
FC and the set frequency will flash on and off alternately, then set frequency will be retained.
The set frequency will be retained even if power supply is cut.

*1: Single-phase models are R/L1 and S/L2/N.

Ex.3 Operation Command: External Signal Frequency Command: Setting Dial

(1) Wiring

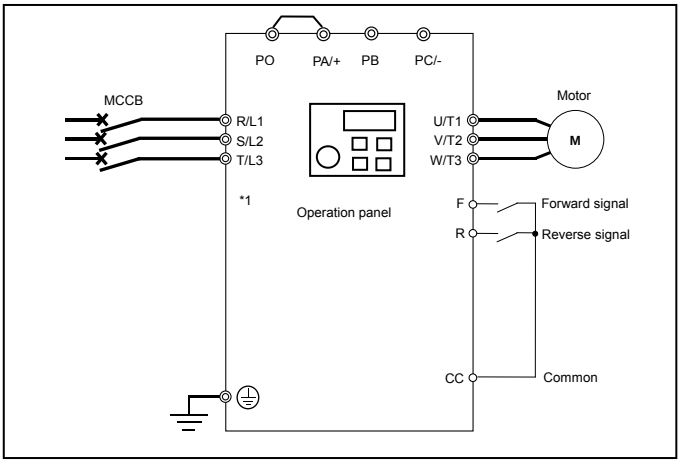

(2) Parameter setting

Title	Function	Setting value
CMOd	Command mode selection	0
FMOd	Frequency setting mode selection 1	0 or 3

(3) Operation

Run/stop: ON/OFF input to F-CC, R-CC. (with sink logic)

F is for forward run signal and R is for reverse run signal (default setting)

Frequency setting: Turn the setting dial to set the frequency.

*1: Single-phase models are R/L1 and S/L2/N.

Ex.4 Operation Command: External Signal
Frequency Command: External Analog Signal

(1) Wiring

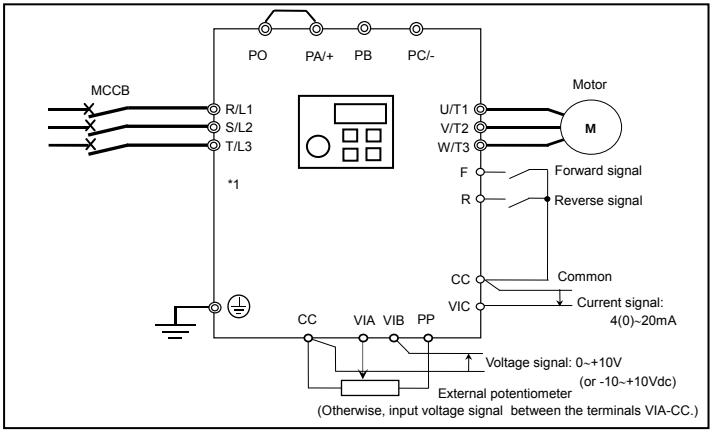

(2) Parameter setting

Title	Function	Setting value
CMOd	Command mode selection	0
FMOd	Frequency setting mode selection 1	1, 2 or 8

(3) Operation

Run/stop: ON/OFF input to F-CC, R-CC. (with sink logic)

F is for forward run signal and R is for reverse run signal (default setting)

Frequency setting: VIA: Input 0~+10V (external potentiometer), VIB: Input 0~+10V (or -10~+10Vdc) or VIC: 4(0)~20mA to set the frequency.

Set the selection of VIA, VIB or VIC in parameter FMOd.

VIA : FMOd = 1

VIB : FMOd = 2

VIC : FMOd = 8

Refer to section 7.3 for the setting of analog input characteristics.

*1: Single-phase models are R/L1 and S/L2/N.

4. Setting parameters

4.1 Setting and Display Modes

This inverter has the following three display modes.

Standard monitor mode **The standard inverter mode. This mode is enabled when inverter power goes on.**

This mode is for monitoring the output frequency and setting the frequency reference value. If also displays information about status alarms during running and trips.

- Display of output frequency, etc.
  - F710 Initial panel display selection
  - (F720 Initial extension panel display selection)
  - F702 Free unit display scale
- Setting frequency reference values.
- Status alarm

  If there is an error in the inverter, the alarm signal and the frequency will flash alternately in the LED display.

  - C : When a current flows at or higher than the overcurrent stall prevention level.
  - P : When a voltage is generated at or higher than the over voltage stall prevention level.
  - L : When the cumulative amount of overload reaches 50% or more of the overload trip value, or when the main circuit element temperature reaches the overload alarm level
  - H : When the overheat protection alarm level is reached

Setting monitor mode **The mode for setting inverter parameters.**

⇒ How to set parameters, refer to section 4.2.

There are two parameter read modes. Refer to section 4.2 for details about selection and switching of modes.

Easy setting mode : Only the ten most frequently used parameters are displayed.
Parameters can be registered as necessary.
(max. 32 parameters)

Standard setting mode : Both basic and extended all parameters are displayed.

- Each press of the EASY key switches between the Easy setting mode and the Standard setting mode.

Status monitor mode

The mode for monitoring all inverter status.

Allows monitoring of frequency command value, output current/voltage and terminal information.

⇒ Refer to chapter 8.

The inverter can be moved through each of the modes by pressing the MODE key.

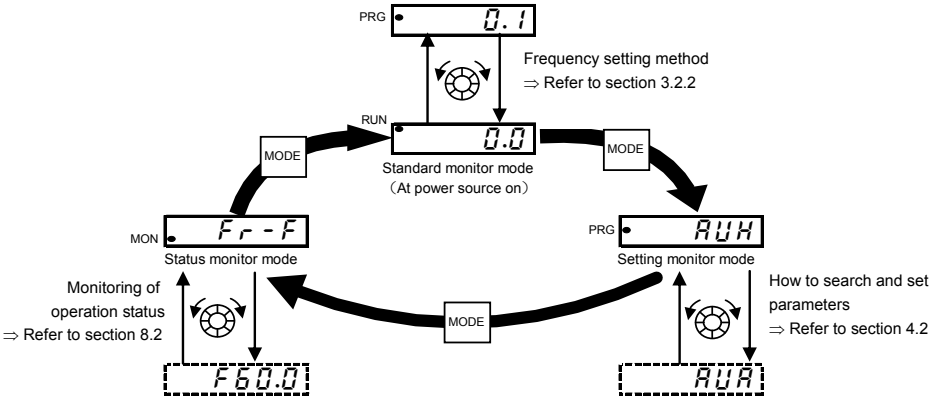

4.2 How to set parameters

There are two types of setting monitor modes: Easy mode and Standard setting mode. The mode active when power is turned on can be selected at PSEL (EASY key mode selection), and the mode can be switched by the EASY key. Note, however, that the switching method differs when only the Easy mode is selected. Refer to section 4.5 for details.

Setting dial and panel key operations are as follows:

Turning the setting dial
Used to select items and changing setting values. Note)

Pressing the center of the setting dial
Used for executing operations and determining setting values. Note)

MODE — Used to select the mode and return to the previous menu

EASY — Used to switch between the Easy and Standard setting modes.

Easy setting mode

: The mode changes to the Easy setting mode when the EASY key is pressed at the standard monitor mode and "EASY" is displayed. In the Easy setting mode, the EASY lamp lights.
Only the most frequently used 10 basic parameters are displayed at default setting.

Easy setting mode

Title	Function
CMOd	Command mode selection
FMOd	Frequency setting mode selection 1
ACC	Acceleration time 1
dEC	Deceleration time 1
UL	Upper limit frequency
LL	Lower limit frequency
tHr	Motor electronic-thermal protection level 1
FM	Meter adjustment gain
F701	Current/voltage unit selection
PSEL	EASY key mode selection

- If the EASY key is pressed while the setting dial is being turned, values continue to be incremented or decremented even if you release your finger from the setting dial. This feature is handy when setting large values.

Note) Of the available parameters, number value parameters (ACC etc.) are reflected in actual operation when the setting dial is turned. Note, however, that the center of the setting dial must be pressed to save values even when the power is turned off.
Note, also, that item selection parameters (FMOd etc.) are not reflected in actual operation by just turning the setting dial. To reflect these parameters, press the center of the setting dial.

Standard setting mode : The mode changes to the Standard setting mode when the EASY key is pressed and "Std" is displayed. Both basic and extended all parameters are displayed.

- Basic parameters : This parameter is a basic parameter for the operation of the inverter.
  - ⇒ Refer to chapter 5 for details.
  - ⇒ Refer to section 11.2 for parameter tables.
- Extended parameters : The parameters for detailed and special setting.
  - ⇒ Refer to chapter 6 for details.
  - ⇒ Refer to section 11.3 for parameter tables.

Note) There are the parameters that cannot be changed during inverter running for reasons of safety. Refer to section 11.9.

4.2.1 Settings in the Easy setting mode

The inverter enters this mode by pressing the MODE key when the Easy setting mode is selected

When you are unsure of something during operation:
You can return to the Standard monitor mode by pressing the MODE key several times.

Easy setting mode (Registered parameters at default setting)

Title	Function
CMOd	Command mode selection
FMOd	Frequency setting mode selection 1
ACC	Acceleration time 1
dEC	Deceleration time 1
UL	Upper limit frequency
LL	Lower limit frequency
tHr	Motor electronic-thermal protection level 1
FM	Meter adjustment gain
F701	Current/voltage unit selection
PSEL	EASY key mode selection

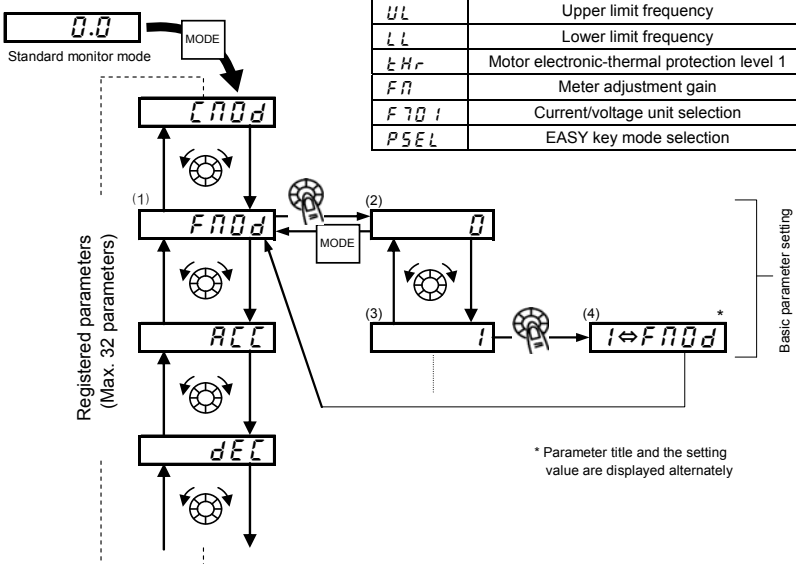

■ Setting parameters in the Easy setting mode

(1) Select parameter to be changed. (Turn the setting dial.)

(2) Read the programmed parameter setting. (Press the center of the setting dial.)

(3) Change the parameter value. (Turn the setting dial.)

(4) Press this key to save the parameter value. (Press the center of the setting dial.)

- To switch to the Standard setting mode, press the EASY key in the Standard monitor mode. "Std" is displayed, and the mode is switched.

4.2.2 Settings in the Standard setting mode

The inverter enters this mode by pressing the MODE key when the Standard setting mode is selected.

When you are unsure of something during operation:
You can return to the Standard monitor mode by pressing the MODE key several times.

■ How to set basic parameters

(1) Select parameter to be changed. (Turn the setting dial.)

(2) Read the programmed parameter setting. (Press the center of the setting dial.)

(3) Change the parameter value. (Turn the setting dial.)

(4) Press this key to save the parameter value. (Press the center of the setting dial.)

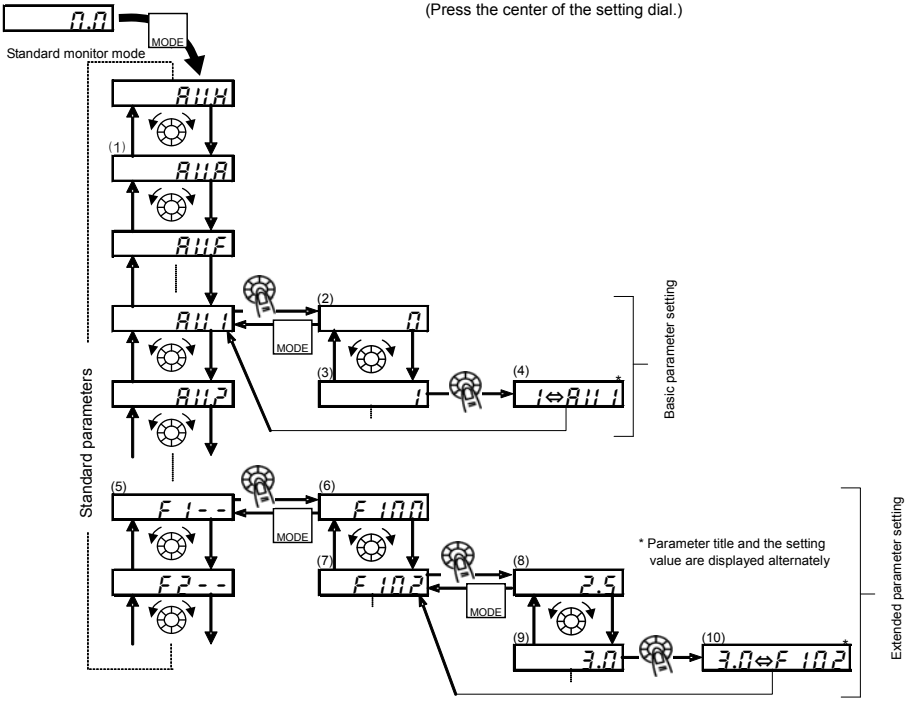

- To switch to the Easy setting mode, press the EASY key in the Standard monitor mode. EASY is displayed, and the mode is switched.

■ How to set extended parameters

Each extended parameter is composed of an "F, A or C "suffixed with a 3-digit figure, so first select and read out the heading of the parameter you want "F 1- -" to "F 9- -", "A- - -", "C- - -" ("F 1- -": Parameter starting point is 100, "A- - -": Parameter starting point is A.)

(5) Select the title of the parameter you want to change. (Turn the setting dial.)

(6) Read the extended parameter. (Press the center of the setting dial.)

(7) Select parameter to be changed. (Turn the setting dial.)

(8) Read the programmed parameter setting. (Press the center of the setting dial.)

(9) Change the parameter value. (Turn the setting dial.)

(10) Press this key to save the parameter value. (Press the center of the setting dial.)

■ Adjustment range and display of parameter setting value

H 1: An attempt has been made to assign a value that is higher than the programmable range.

L 0: An attempt has been made to assign a value that is lower than the programmable range.

If the above alarm is flashing on and off, values that exceed H 1 or are equal or lower than L 0 cannot be set.

* A setting value of the presently-selected parameter might exceed the upper limit or the lower limit by changing other parameters.

4

4.3 Functions useful in searching for a parameter or changing a parameter setting

This section explains functions useful in searching for a parameter or changing a parameter setting.

Changed parameters history search (History function) AUH

This function automatically searches for the last five parameters whose settings have been changed. To use this function, select the AUH parameter. (The changed parameters are displayed regardless of difference with the default settings.)

⇒ Refer to section 6.1.1 for details.

Easy setting parameters according to application (Application easy setting) AUA

The necessary parameter for your machine can be easily set.

Select the machine by parameter AUA and set by using the easy setting mode.

⇒ Refer to section 6.1.2 for details.

Set parameters by purpose (Guidance function) AUF

Only parameters required for a special purpose can be called up and set.

To use this function, select parameter AUF

⇒ Refer to section 6.1.3 for details.

Reset parameters to default settings tYP

Use the tYP parameter to reset all parameters back to the default settings. To use this function, set parameter tYP =3 or 13.

⇒ Refer to section 4.3.2 for details.

4

Call saved customer settings tYP

Customer settings can be batch-saved and batch-called.

These settings can be used as customer-exclusive default settings.

To use this function, set parameter tYP = 7 or 8.

⇒ Refer to section 4.3.2 for details.

Search changed parameters GrU

Automatically searches for only those parameters that are programmed with values different from the default setting.

To use this function, select the GrU parameter.

⇒ Refer to section 4.3.1 for details.

4.3.1 Searching for and resetting changed parameters

GrU: Automatic edit function

- **Function**
  Automatically searches for only those parameters that are programmed with values different from the default setting and displays them in the GrU. Parameter setting value can also be changed while searching.

Note 1: If you reset a parameter to its factory default, the parameter will no longer appear in GrU.

Note 2: It may take several seconds to display changed parameters because all data stored in GrU is checked against the default settings. To cancel a parameter search, press the MODE key.

Note 3: Parameters which cannot be reset to the default setting after setting tYP to 3 are not displayed.
⇒ Refer to section 4.3.2 for details.

■ How to search and reprogram parameters

Panel operation	LED display	Operation
	0.0	Displays the output frequency (operation stopped). (When standard monitor display selection is set as F710=0 [output frequency])
MODE	AUH	Displays the first basic parameter "History function (AUH)."
	GrU	Turn the setting dial, and select GrU.
	U---	Press the center of the setting dial to enter the user parameter setting change search mode.
or	ACC	Searches for and displays parameters different to the default settings. Parameters are changed by either pressing the center of the setting dial or turning it to the right. (Turning the setting dial to the left searches for parameter in the reverse direction.)
	8.0	Press the center of the setting dial to display set values.
	5.0	Turn the setting dial, and change set values.
	5.0⇔ ACC	Press the center of the setting dial to set values. The parameter name and set value light alternately and are written.
	U--F (U--r)	Use the same steps as those above and turn the setting dial to display parameters to search for or whose settings must be changed, and check or change the parameter settings.
	GrU	When GrU appears again, the search is ended.
MODE MODE MODE	Parameter display ↓ GrU ↓ Fr-F ↓ 0.0	A search can be canceled by pressing the MODE key. Press the key once while the search is underway to return to the display of parameter setting mode. Returns to the GrU display. After that press the MODE key and return to the status monitor mode or the standard monitor mode (display of output frequency).

4.3.2 Return to default settings

tYP: Default setting

- Function
  It is possible to return groups of parameters to their defaults, clear run times, and record/recall set parameters.

[Parameter setting]

Title	Function	Adjustment range	Default setting
tYP	Default setting	0: - 1: 50Hz default setting 2: 60Hz default setting 3: Default setting 1 (Initialization) 4: Trip record clear 5: Cumulative operation time clear 6: Initialization of type information 7: Save user setting parameters 8: Load user setting parameters 9: Cumulative fan operation time record clears 10, 11: - 12: Number of starting clear 13: Default setting 2 (complete initialization)	0

- This function will be displayed as 0 during reading on the right. This previous setting is displayed on the left.
  Example: 3 0

- tYP cannot be set during the inverter operating. Always stop the inverter first and then program.

Programmed value

50 Hz default setting (tYP= 1)

Setting tYP to 1 sets the following parameters for base frequency 50 Hz use.
(The setting values of other parameters are not changed.)

- Maximum frequency (FH) : 50Hz
- Base frequency 1 (uL) : 50Hz
- VIA input point 2 frequency (F204) : 50Hz
- VIC input point 2 frequency (F219) : 50Hz
- Process upper limit (F367) : 50Hz
- Motor rated speed (F417) : 1410 min^{-1}
- Upper limit frequency (UL) : 50Hz
- Base frequency 2 (F170) : 50Hz
- VIB input point 2 frequency (F213) : 50Hz
- Automatic light-load high-speed operation frequency (F330) : 50Hz
- Communication command point 2 frequency (F814) : 50Hz

60 Hz default setting (tYP=2)

Setting tYP to 2 sets the following parameters for base frequency 60 Hz use.

(The setting values of other parameters are not changed.)

- Maximum frequency (FH) : 60Hz
- Base frequency 1 (uL) : 60Hz
- VIA input point 2 frequency (F204) : 60Hz
- VIC input point 2 frequency (F219) : 60Hz
- Process upper limit (F367) : 60Hz
- Motor rated speed (F417) : 1710 min^{-1}
- Upper limit frequency (UL) : 60Hz
- Base frequency 2 (F170) : 60Hz
- VIB input point 2 frequency (F213) : 60Hz
- Automatic light-load high-speed operation frequency (F330) : 60Hz
- Communication command point 2 frequency (F814) : 60Hz

Default setting 1 (tYP = 3)

Setting tYP to 3 will return parameters to the default settings (exclusive of some parameters).

- When 3 is set, In It is displayed for a short time after the settings are configured, and then disappears. Then the inverter is in standard motor mode. In this case, the trip history data is cleared.

Be aware that the following parameters do not return to the default settings even if tYP=3 is set for maintainability. (To initialize all parameters, set tYP= 13)

- •AUL : Overload characteristic selection
- •FMSL : Meter selection
- •FM : Meter adjustment gain
- •SET : Checking the region setting
- •F107 : Analog input terminal selection
- •F109 : Analog/logic input selection (VIA/VIB)
- •F470~F475 : VIA/VIB/VIC input bias / gain
- •F669 : Logic output/pulse train output selection
- •F681 : Analog output signal selection
- •F691 : Inclination characteristic of analog output
- •F692 : Analog output bias
- •F880 : Free notes

* Refer to “Communication manual” about parameter C xxx.

Trip record clear (tYP = 4)

Setting tYP to 4 initializes the past eight sets of recorded error history data.

- The parameter does not change.

Cumulative operation time clear (tYP = 5)

Setting tYP to 5 resets the cumulative operation time to the initial value (zero).

Initialization of type information (tYP = 6)

Setting tYP to 6 clears the trips when an EtYP format error occurs. But if the EtYP displayed, contact your Toshiba distributor.

Save user setting parameters (tYP = 7)

Setting tYP to 7 saves the current settings of all parameters.

Load user setting parameters (tYP = 8)

Setting tYP to 8 loads parameter settings to (calls up) those saved by setting tYP to 7.

* By setting tYP to 7 or 8, you can use parameters as your own default parameters.

Cumulative fan operation time record clear (tYP = 9)

Setting tYP to 9 resets the cumulative operation time to the initial value (zero).
Set this parameter when replacing the cooling fan, and so on

Number of starting clear (tYP = 12)

Setting tYP to 12 resets the number of starting to the initial value (zero).

Default setting 2 (tYP = 13)

Set tYP to 13 to return all parameters to their default settings.
When 13 is set, In It is displayed for a short time after the settings are configured, and then disappears. Then setup menu SEt is displayed. After reviewing the setup menu items, make a setup menu selection. In this case, all parameters are returned to their defaults, and the trip history data is cleared. (Refer to section 3.1)

4.4 Checking the region settings selection

SEt: Checking the region setting

- Function
  The region selected on the setup menu can be checked.
  Also, the setup menu starts and can be changed to a different region.

[Parameter setting]

Title	Function	Adjustment range	Default setting
SEt	Checking the region setting	0: Start setup menu 1: Japan (read only) 2: North America (read only) 3: Asia (read only) 4: Europe (read only)	1 *

* Default setting values vary depending on the setup menu setting. 1 to 4 are displayed.

■ Content of region settings

The number displayed when parameter SEt is read indicates which of the following regions was selected on the setup menu.

4: EU (Europe) is selected on the setup menu.
3: AS IA (Asia, Oceania) is selected on the setup menu.
2: USA (North America) is selected on the setup menu.
1: JP (Japan) is selected on the setup menu.

The setup menu is started by setting SEt=0.
Refer to section 3.1 for details.

Note: 1 to 4 set to parameter SEt are read-only. They cannot be written.

4.5 EASY key function

PSEL : EASY key mode selection

F750 : EASY key function selection

F751 to F782 : Easy setting mode parameter 1 to 32

- **Function**
  It is possible to switch between standard mode and easy setting mode using the EASY key. (default setting)
  Up to 32 arbitrary parameters can be registered to easy setting mode.
  The EASY key can select following four functions.
  - Easy / Standard setting mode switching function
  - Shortcut key function
  - Local / Remote switching function
  - Peak hold function

[Parameter setting]

Title	Function	Adjustment range	Default setting
PSEL	EASY key mode selection	0: Standard setting mode at power on 1: Easy setting mode at power on 2: Easy setting mode only	0
F750	EASY key function selection	0: Easy / standard setting mode switching function 1: Shortcut key 2: Local / remote key 3: Monitor peak / minimum hold trigger 4, 5: -	0

■ Easy / Standard setting mode switching function (F750=0): Default setting

It is possible to switch between standard mode and easy setting mode when you push the EASY key while the inverter is stopping.
Standard setting mode is selected when the power is turned on at default setting.
The way parameters are read out and displayed varies according to the mode selected.

Easy setting mode
Allows pre-registration (easy setting mode parameters) of frequently changed parameters and reading of only registered parameters (maximum of 32 types).
In the Easy setting mode, the EASY key lamp lights.

Standard setting mode
Standard setting mode in which all parameters are read out.

[How to read out parameters]
Use the EASY key to change between Easy setting mode and Standard setting mode, and then press the MODE key to enter the setting monitor mode.
Turn the setting dial to read the parameter.
The relation between the parameter and the mode selected is shown below.

PSEL=0

* When the power is turned on, the inverter is in standard mode. Press the EASY key to switch to easy setting mode.

PSEL= 1

* When the power is turned on, the inverter is in easy setting mode. Press the EASY key to switch to standard mode.

PSEL=2

* Always in easy setting mode.
  However, it can be switched to standard setting mode by EASY key if it is set to PSEL=0, 1. When PSEL is not displayed in Easy setting mode, Und0 is displayed and it can be temporarily switched to standard setting mode by EASY key after center of the setting dial is pushed for five seconds or more.

[How to select parameters]

Select the desired parameters as easy setting mode parameters 1 to 32 (F751 to F782). Note that parameters should be specified by communication number. For communication numbers, refer to Table of parameters.

In easy setting mode, only parameters registered to parameters 1 to 32 are displayed in order of registration.

The values of the default settings are shown in the table below.

[Parameter setting]

Title	Function	Adjustment range	Default setting
F751	Easy setting mode parameter 1	0-2999	3 (CMOd)
F752	Easy setting mode parameter 2	0-2999	4 (FMOd)
F753	Easy setting mode parameter 3	0-2999	9 (ACC)
F754	Easy setting mode parameter 4	0-2999	10 (dEC)
F755	Easy setting mode parameter 5	0-2999	12 (UL)
F756	Easy setting mode parameter 6	0-2999	13 (LL)
F757	Easy setting mode parameter 7	0-2999	600 (tHr)
F758	Easy setting mode parameter 8	0-2999	6 (FM)
F759	Easy setting mode parameter 9	0-2999 (Set by communication number)	999 (No function)
F760	Easy setting mode parameter 10		
F761	Easy setting mode parameter 11		
F762	Easy setting mode parameter 12		
F763	Easy setting mode parameter 13		
F764	Easy setting mode parameter 14		
F765	Easy setting mode parameter 15		
F766	Easy setting mode parameter 16		
F767	Easy setting mode parameter 17		
F768	Easy setting mode parameter 18		
F769	Easy setting mode parameter 19		
F770	Easy setting mode parameter 20		
F771	Easy setting mode parameter 21		
F772	Easy setting mode parameter 22		
F773	Easy setting mode parameter 23		
F774	Easy setting mode parameter 24		
F775	Easy setting mode parameter 25		
F776	Easy setting mode parameter 26		
F777	Easy setting mode parameter 27		
F778	Easy setting mode parameter 28		
F779	Easy setting mode parameter 29		
F780	Easy setting mode parameter 30		
F781	Easy setting mode parameter 31	0-2999	701 (F701)
F782	Easy setting mode parameter 32	0-2999	50 (PSEL)

Note: If any number other than communication numbers is specified, it is regarded as 999 (no function assigned).

■ **Shortcut key function (F750= 1)**

This function allows you to register, in a shortcut list, parameters whose settings need to be changed frequently so that you can read them out easily in a single operation.
The shortcut is usable in the frequency monitor mode only.

[Operation]
Set F750 to 1, read out the setting of the parameter you want to register, and press and hold down the EASY key for 2 seconds or more. The registration of the parameter in a shortcut list has been completed.
To read out the parameter, just press the EASY key.

■ **Local / Remote switching (F750=2)**

This function allows you to easily switch between panel operation and external operation.
To switch between control device, set F750 to 2, and then select the desired control device, using the EASY key.

If bumpless operation selection F295 is set to 1 (Enabled), it can be switched during operation.

Local means panel operation.
Remote means the operation that is selected by command mode selection: CMOd and frequency setting mode selection: FMOd (F207).
In the Local mode, the EASY key lamp lights.

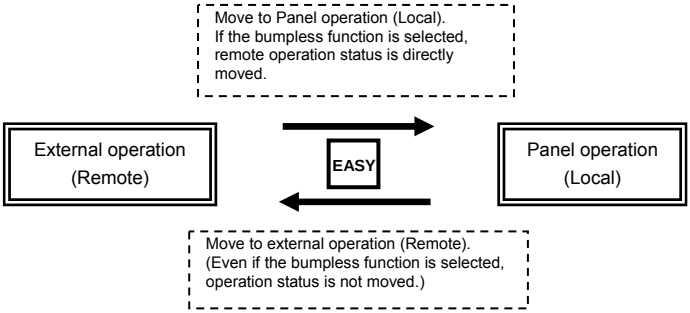

Note) Please note that if set the parameter F750 to 0 in local mode, the panel operation state holds and it becomes different from setting of CMOd.

■ **Peak hold function (F750=3)**

This function allows you to set peak hold and minimum hold triggers for parameters F709, using the EASY key.
The measurement of the minimum and maximum values set for F709 starts the instant when you press the EASY key after setting F750 to 3.
The peak hold and minimum hold values are displayed in absolute values.

5. Main parameters

Here are described main parameters you set before use according to the section 11. Tables of parameters and data.

5.1 Meter setting and adjustment

FMSL: Meter selection FM: Meter adjustment gain

- Function
  Output of 0 - 1mAdc, 0 (4) - 20mAdc, 0 - 10vdc can be selected for the output signal from the FM terminal, depending on the F681 setting. Adjust the scale at FM.
  Use an ammeter with a full-scale 0 - 1mAdc meter.
  The F692 (analog output bias) needs to be adjusted if output is 4 - 20mAdc.

[Parameter setting]

Title	Function	Adjustment range	Supposition output at FMSL = 17	Default setting
FMSL	Meter selection	0: Output frequency 1: Output current 2: Frequency command value 3: Input voltage (DC detection) 4: Output voltage (command value) 5: Input power 6: Output power 7: Torque 8: - 9: Motor cumulative load factor 10: Inverter cumulative load factor 11: PBR (Braking resistor) cumulative load factor 12:Stator frequency 13:VIA input value 14:VIB input value 15:Fixed output 1 (output current 100% equivalent) 16:Fixed output 2 (output current 50% equivalent) 17:Fixed output 3 (Other than the output current) 18:RS485 communication data 19:For adjustments (FM set value is displayed.) 20: VIC input value 21, 22: - 23: PID feedback value 24: Integral input power 25: Integral output power	Maximum frequency (FH) - Maximum frequency (FH) 1.5x rated voltage 1.5x rated voltage 1.85x rated power 1.85x rated power 2.5x rated torque - Rated load factor Rated load factor Rated load factor Maximum frequency (FH) Maximum input value Maximum input value - - - Maximum value (100.0%) - Maximum input value - Maximum frequency (FH) 1000x F749 1000x F749	0
FM	Meter adjustment gain	-	-	-

■ Resolution: All FM terminals have a maximum of 1/1000.

■ Adjustment scale with parameter FM (Meter adjustment)
Connect meters as shown below.

<Displaying output frequency>

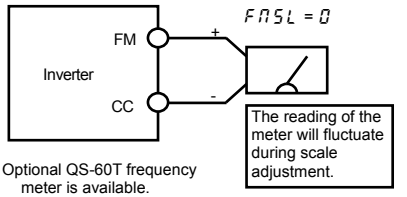

* Optional QS-60T frequency meter is available.

<Displaying output current>

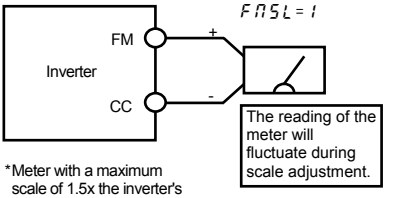

*Meter with a maximum scale of 1.5x the inverter's rated output current is recommended.

[Example of how to adjust the FM terminal frequency meter]

* Use the meter's adjustment screw to pre-adjust zero-point.
* Adjust F691 and F692 in advance in case of 4-20mA output.

Operation panel action	LED display	Operation
-	60.0	Displays the output frequency. (When standard monitor display selection F710 is set to 0)
MODE	AUH	The first basic parameter "AUH" (history function) is displayed.
	FM	Turn the setting dial to select FM.
	60.0	Output frequency can be displayed by pressing the center of the setting dial.
	60.0	Turn the setting dial to adjust the meter. The meter's indicator will change by turning setting dial. (The inverter displays output frequency and it will not change with the setting dial)
	60.0 ⇔ FM	Press the center of the setting dial to save the meter's adjustments. FM and the frequency are displayed alternately.
MODE + MODE	60.0	The display returns to displaying output frequency. (When standard monitor display selection F710 is set to 0 [output frequency])

■ Example of 4-20mA output adjustment (Refer to section 6.33.3 for details)

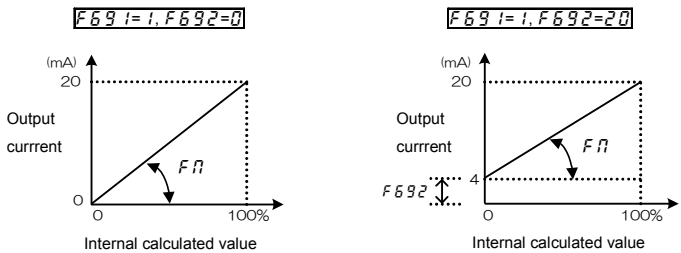

Note 1) When using the FM terminal for current output, be sure that the external load resistance is less than 600Ω. Use over 1kΩ external load resistance for voltage output.

Note 2) FMSL = 12 is the motor drive frequency.

■ Adjusting the meter in inverter stop state

- Adjustment of the meter for output current (FMSL = 1)
  Adjustment of the meter for output current can be done in inverter stop state.
  When setting FMSL to 15 for fixed output 1 (output current 100% equivalent), a signal assuming that inverter rated current (output current 100% equivalent) passes will be output from the FM terminal.
  Adjust the meter with the FM (Meter adjustment) parameter in this state.
  Similarly, if you set FMSL to 16 for fixed output 2 (output current 50% equivalent), a signal assuming that 50% of inverter rated current (output current 50% equivalent) passes will be output from the FM terminal.
  After meter adjustment is ended, set FMSL to 1 (output current).

- Other adjustments (FMSL = 0, 2 to 7, 9 to 14, 18, 20, 23 to 25)
  FMSL = 17: When fixed output 3 (other than the output current) is set, a signal of the value for other monitors is fixed at the following values and output through the FM terminal.
  100% standard value for each item is the following:

FMSL=0, 2, 12, 23	: Maximum frequency (FH)
FMSL=3, 4	: 1.5 times of rated voltage
FMSL=7	: 2.5 times of rated torque
FMSL=9 to 11	: Rated load factor
FMSL=13, 14, 20	: Maximum input value (10V, or 20mA)
FMSL=18	: Maximum value (100.0%)
FMSL=24, 25	: 1000x F749

5.2 Setting acceleration/deceleration time

ACC: Acceleration time 1 FS19: Setting of acceleration/deceleration time unit

dEC: Deceleration time 1 AU1: Automatic acceleration/deceleration

- Function
  1) For acceleration time 1 ACC programs the time that it takes for the inverter output frequency to go from 0.0Hz to maximum frequency FH.
  2) For deceleration time 1 dEC programs the time that it takes for the inverter output frequency to go from maximum frequency FH to 0.0Hz.

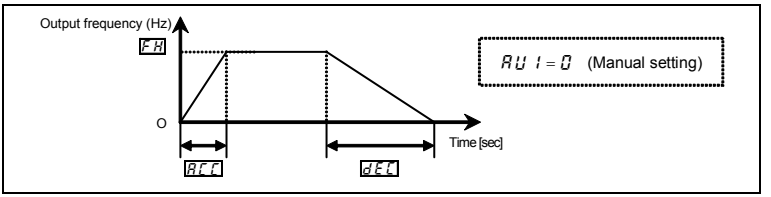

[Parameter setting]

Title	Function	Adjustment range	Default setting
ACC	Acceleration time 1	0.0-3600 (360.0) (s)	10.0
dEC	Deceleration time 1	0.0-3600 (360.0) (s)	10.0
FS19	Setting of acceleration/deceleration time unit	0: - 1: 0.01s unit (after execution: 0) 2: 0.1s unit (after execution: 0)	0

Note1): Setting increment unit can be changed to 0.01 seconds by parameter FS19.

Note2): FS19=2: When the acceleration/deceleration time is set to 0.0 seconds, the inverter accelerates and decelerates 0.05 seconds.

FS19= 1: When the acceleration/deceleration time is set to 0.00 seconds, the inverter accelerates and decelerates 0.01 seconds.

- If the programmed value is shorter than the optimum acceleration/deceleration time determined by load conditions, overcurrent stall or overvoltage stall function may make the acceleration/deceleration time longer than the programmed time. If an even shorter acceleration/deceleration time is programmed, there may be an overcurrent trip or overvoltage trip for inverter protection. (Refer to section 13.1 for details)

5.3 Maximum frequency

FH : Maximum frequency

- Function
  1) Programs the range of frequencies output by the inverter (maximum output values).
  2) This frequency is used as the reference for acceleration/deceleration time.

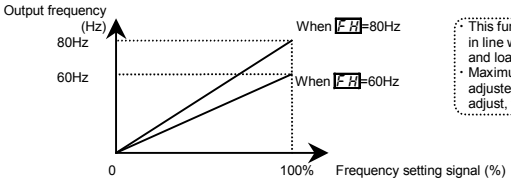

- This function determines the value in line with the ratings of the motor and load.
- Maximum frequency cannot be adjusted during operation.To adjust, first stop the inverter.

- If FH is increased, adjust the upper limit frequency UL as necessary.

[Parameter setting]

Title	Function	Adjustment range	Default setting
FH	Maximum frequency	30.0-500.0 (Hz)	80.0

5

5.4 Upper limit and lower limit frequencies

UL: Upper limit frequency LL: Lower limit frequency

- Function
  Programs the lower limit frequency that determines the lower limit of the output frequency and the upper limit frequency that determines the upper limit of that frequency.

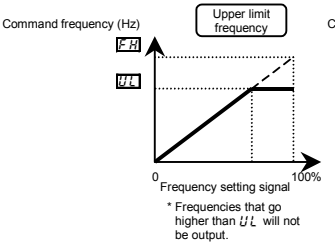

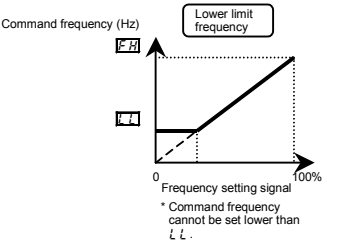

[Parameter setting]

Title	Function	Adjustment range	Default setting
UL	Upper limit frequency	0.5 - FH (Hz)	*1
LL	Lower limit frequency	0.0 - UL (Hz)	0.0

* 1: Default setting values vary depending on the setup menu setting. Refer to section 11.5.

Note1) Do not set a value 10 times larger than uL (base frequency 1) and F170 (base frequency 2) for UL. If a large number is set, the output frequency can only be output at 10 times of minimum value uL and F170 and A-05 alarm is displayed.

Note2) Output frequency lower than parameter F240 (Starting frequency) is not output. Parameter F240 setting is needed.

5.5 Base frequency

ul : Base frequency 1 ulu : Base frequency voltage 1

- Function
  Set the base frequency and the base frequency voltage in conformance with load specifications or the base frequency.

Note: This is an important parameter that determines the constant torque control area.

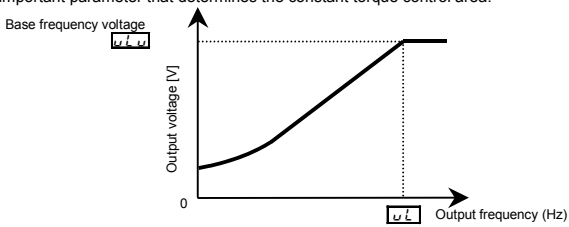

[Parameter setting]

Title	Function	Adjustment range	Default setting
ul	Base frequency 1	20.0-500.0 (Hz)	*1
ulu	Base frequency voltage1	50-330 (240V class) 50-660 (500V class)	*1

* 1: Default setting values vary depending on the setup menu setting. Refer to section 11.5.

5.6 Setting the electronic thermal

AUL : Overload characteristic selection

tHr : Motor electronic-thermal protection level 1

OLM : Electronic-thermal protection characteristic selection

F173 : Motor electronic-thermal protection level 2

F607 : Motor 150% overload detection time

F631 : Inverter overload detection method

F632 : Electronic-thermal memory

F657 : Overload alarm level

• Function

This parameter allows selection of the appropriate electronic thermal protection characteristics according to the particular rating and characteristics of the motor.

[Parameter setting]

Title	Function	Adjustment range	Default setting
AUL	Overload characteristic selection	0: - *4 1: Constant torque characteristic (150%-60s) 2: Variable torque characteristic (120%-60s)	0
tHr	Motor electronic-thermal protection level 1	10 – 100 (%) / (A) *1	100
OLM	Electronic-thermal protection characteristic selection		0

Setting value		Overload protection	Overload stall
0	Standard motor	valid	invalid
1		valid	valid
2		invalid	invalid
3		invalid	valid
4	VF motor (special motor)	valid	invalid
5		valid	valid
6		invalid	invalid
7		invalid	valid

Title	Function	Adjustment range	Default setting
F173	Motor electronic-thermal protection level 2	10 – 100 (%) / (A) *1	100
F607	Motor 150% overload detection time	10 – 2400 (s)	300
F631	Inverter overload detection method	0: 150%-60s (120%-60s) 1: Temperature estimation	0

[Parameter setting]

Title	Function	Adjustment range	Default setting
F632	Electronic-thermal memory	0: Disabled (tHr, F173) 1: Enabled (tHr, F173) 2: Disabled (tHr) 3: Enabled (tHr)	0
F657	Overload alarm level	10-100	50

*1: The inverter's rated current is 100%. When F701 (current/voltage unit selection) = 1 (A (amps)/V (volts)) is selected, it can be set at A (amps).

*2: F632= 1: Electronic-thermal statuses (cumulative overload value) of motor and inverter are saved when power supply is OFF. It is calculated from the saved value when power supply is ON again.

*3: Parameter AUL is displayed as "0" during reading after this is set.
Present setting of inverter overload characteristic can be confirmed by status monitor.
Refer to monitor "Overload and region setting" of section 8.2.1.

1) Setting the electronic thermal protection characteristics selection OLM and motor electronic thermal protection level 1 tHr, 2 F173

5

The electronic thermal protection characteristics selection (OLM) is used to enable or disable the motor overload trip function (OL2) and the overload stall function.
While the inverter overload trip (OL1) will be in constantly detective operation, the motor overload trip (OL2) can be selected using the parameter OLM.

Explanation of terms
Overload stall: This is an optimum function for equipment such as fans, pumps and blowers with variable torque characteristics that the load current decreases as the operating speed decreases.
When the inverter detects an overload, this function automatically lowers the output frequency before the motor overload trip (OL2) is activated. With this function, operation can be continued, without tripping, by operating using a frequency balanced by load current.
Note: Do not use the overload stall function with loads having constant torque characteristics (such as conveyor belts in which load current is fixed with no relation to speed).

[Using standard motors (other than motors intended for use with inverters)]

When a motor is used in the lower frequency range than the rated frequency, that will decrease the cooling effects for the motor. This speeds up the start of overload detection operations when a standard motor is used in order to prevent overheating.

■ Setting of electronic thermal protection characteristics selection OLM

Setting value	Overload protection	Overload stall
0	valid	invalid
1	valid	valid
2	invalid	invalid
3	invalid	valid

■ Setting of motor electronic thermal protection level 1 tHr (Same as F173)

When the capacity of the motor in use is smaller than the capacity of the inverter, or the rated current of the motor is smaller than the rated current of the inverter, adjust thermal protection level 1 tHr for the motor in accordance with the motor's rated current.

* When displaying as a percentage, 100% = rated output current (A) of the inverter is displayed.

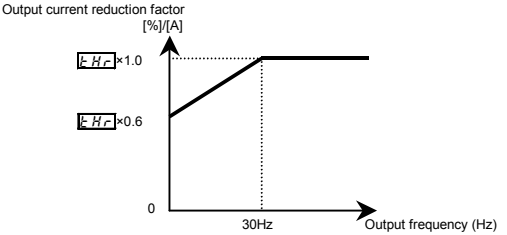

Note: The motor overload protection start level is fixed at 30Hz.

[Example of setting: When the VFS15-2007PM-W is running with a 0.4kW motor having 2A rated current]

Operation panel action	LED display	Operation
	0.0	Displays the output frequency. (Perform during operation stopped.) (When standard monitor display selection F710 is set to 0 [output frequency])
MODE	AUH	The first basic parameter "AUH" (history function) is displayed.
	tHr	Turn the setting dial to change the parameter to tHr.
	100	Parameter values can be read by pressing the center of the setting dial (default setting is 100%).
	42	Turn the setting dial to change the parameter to 42% (= motor rated current/inverter rated output current ×100=2.0/4.8×100)
	42 ⇔ tHr	Press the center of the setting dial to save the changed parameter. tHr and the parameter are displayed alternately.

Note: The rated output current of the inverter should be calculated from the rated output current for frequencies below 4kHz, regardless of the setting of the PWM carrier frequency parameter (F300).

[Using a VF motor (motor for use with inverter)]

■ Setting of electronic thermal protection characteristics selection OLM

Setting value	Overload protection	Overload stall
4	valid	invalid
5	valid	valid
6	invalid	invalid
7	invalid	valid

VF motors (motors designed for use with inverters) can be used in frequency ranges lower than those for standard motors, but their cooling efficiency decreases at frequencies below 6Hz.

■ Setting of motor electronic thermal protection level 1 thr (Same as F173)

If the capacity of the motor is smaller than the capacity of the inverter, or the rated current of the motor is smaller than the rated current of the inverter, adjust the electronic thermal protection level 1 thr so that it fits the motor's rated current.

* If the indications are in percentages (%), then 100% equals the inverter's rated output current (A).

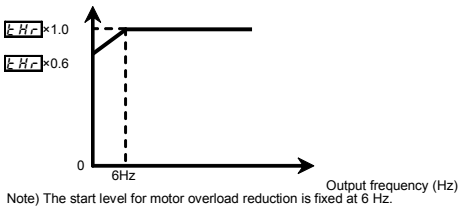

Note) The start level for motor overload reduction is fixed at 6 Hz.

2) Motor 150%-overload detection time F607

Parameter F607 is used to set the time elapsed before the motor trips under a load of 150% (overload trip OL2) within a range of 10 to 2400 seconds.

3) Inverter overload detection method F631

As this function is set to protect the inverter unit, this function cannot be turned off by parameter setting. The inverter overload detection method can be selected using parameter F631 (Inverter overload detection method).

[Parameter setting]

Title	Function	Adjustment range	Default setting
F631	Inverter overload detection method	0: 150%-60s (120%-60s) 1: Temperature estimation	0

If the inverter overload trip function (OL1) is activated frequently, this can be improved by adjusting the stall operation level F601 downward or increasing the acceleration time ACC or deceleration time dEC.

■ F63 1=0 (150%-60s), AUL = 1 (Constant torque characteristic)

Protection is given uniformly regardless of temperature, as shown by the 150%-60 sec overload curve in the figure below.

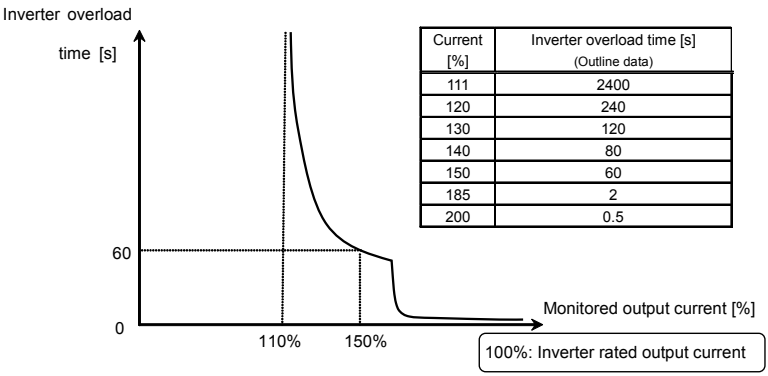

Current [%]	Inverter overload time [s] (Outline data)
111	2400
120	240
130	120
140	80
150	60
185	2
200	0.5

Inverter overload protection characteristics

■ F63 1= 1 (Temperature estimation), AUL = 1 (Constant torque characteristic)

This parameter adjusts automatically overload protection, predicting the inverter internal temperature rise. (diagonally shaded area in the figure below)

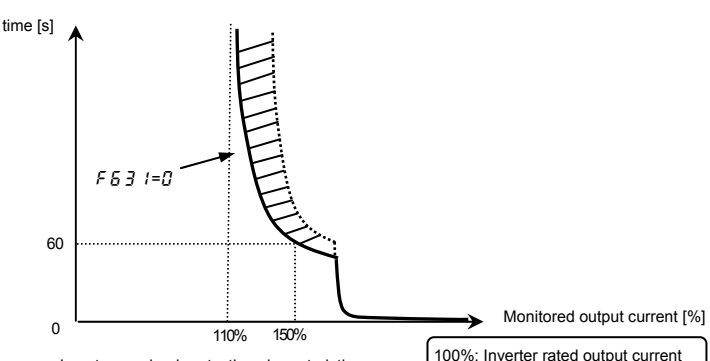

Inverter overload protection characteristics

Note 1: If the load applied to the inverter 150% or more of its rated load or the operation frequency is 0.1Hz or less, the inverter may trip (OL 1 or OC 1 to OC 3) in a shorter time.

Note 2: The inverter is default setting so that, if the inverter becomes overloaded, it will automatically reduce the carrier frequency to avoid an overload trip (OL 1 or OC 1 to OC 3). A reduction in carrier frequency causes an increase in noise from the motor, but this does not affect the performance of the inverter. If you do not want the inverter to reduce the carrier frequency automatically, set the parameter F316=0.

Note 3: Overload detection level is variable by condition of output frequency and carrier frequency.

Note 4: Regarding to characteristic for AUL=2 setting, refer to section 5.6.5).

4) Electronic thermal memory F632

When the power is OFF, it is possible to reset or maintain the overload totaling level.

This parameter's settings are applied both to the motor's electronic thermal memory and the electronic thermal memory for inverter protection.

[Parameters settings]

Title	Function	Adjustment range	Default setting
F632	Electronic thermal memory	0: Disabled (tHr, F173) 1: Enabled (tHr, F173) 2: Disabled (tHr) 3: Enabled (tHr)	0

● F632= 1 is a function for complying with the U.S. NEC standards.

5) Overload characteristic selection AUL

Overload characteristic of inverter can be selected to 150%-60s or 120%-60s.

[Parameters settings]

Title	Function	Adjustment range	Default setting
AUL	Overload characteristic selection	0: - 1: Constant torque characteristic（150%-60s） 2: Variable torque characteristic（120%-60s）	0

● Regarding to characteristic for AUL = 1 setting, refer to section 5.6.3).

Note 1) In case of AUL =2 setting, be sure to install the input AC reactor (ACL) between power supply and inverter.
Note 2) In case of AUL =2 setting in three phase 500V-4.0kW model, be sure to press the grounding capacitor switch and connect the grounding capacitors to the ground.

5

■ AUL =2 (Variable torque characteristic), F63 1=0 (120%-60s)

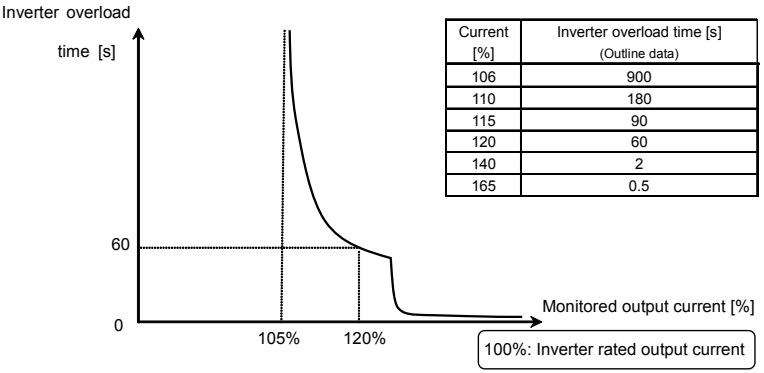

Current [%]	Inverter overload time [s] (Outline data)
106	900
110	180
115	90
120	60
140	2
165	0.5

Inverter overload protection characteristic

■ AUL=2 (Variable torque characteristic), F631=1 (Temperature estimation)

This parameter adjusts automatically overload protection, predicting the inverter internal temperature rise. (diagonally shaded area in the figure below)

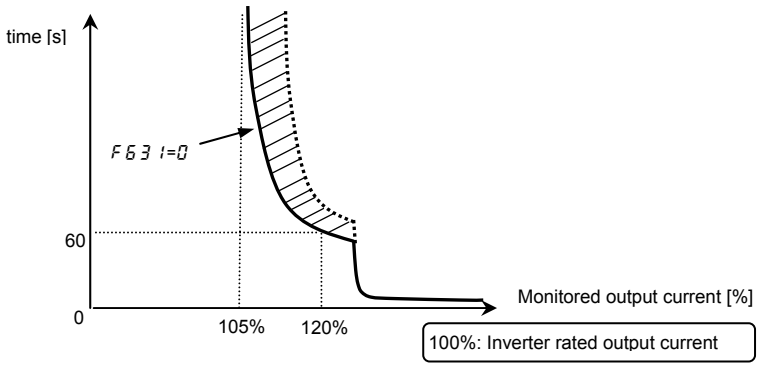

Note 1: The rated output current of inverter is changed by setting of AUL = 1 or 2.
Refer to page L-1 about each rated output current.

Note 2: Parameter AUL is displayed as "0" during reading after this is set.

Note 3: Present setting of inverter overload characteristic can be confirmed by status monitor.
Refer to monitor "Overload and region setting" of section 8.2.1.

6) Overload alarm level F657

When the motor overload level reaches to F657 setting value (%) of overload trip (OL2) level, "L" will be displayed on the left side digit and the "L" and output frequency monitor will be blinking alternately on overload alarm status.

Overload alarm signal can be output from output terminal.

[Parameters settings]

Title	Function	Adjustment range	Default setting
F657	Overload alarm level	10-100 (%)	50

[Example of setting]: Assigning the overload alarm to the OUT terminal.

Title	Function	Adjustment range	Setting
F131	Output terminal selection 2A (OUT)	0-255	16: POL

17 is reverse signal.

5.7 Preset-speed operation (speeds in 15 steps)

Sr0 to Sr7 : Preset-speed frequency 0 to 7

F287 to F294 : Preset-speed frequency 8 to15

F724 : Operation frequency setting target by setting dial

•Function
A maximum of 15 speed steps can be selected just by switching an external logic signal. Multi-speed frequencies can be programmed anywhere from the lower limit frequency LL to the upper limit frequency UL.

[Setting method]

1) Run/stop

The starting and stopping control is done from the terminal block.

Title	Function	Adjustment range	Setting
CMOd	Command mode selection	0: Terminal block 1: Panel keypad (including extension panel) 2: RS485 communication 3: CANopen communication 4: Communication option	0

2) Preset-speed frequency setting

a) Set the speed (frequency) of the number of steps necessary.

[Parameter setting]

Preset-speed 0

Title	Function	Adjustment range	Default setting
Sr0	Preset-speed frequency 0	LL - UL (Hz)	0.0
FMOd	Frequency setting mode selection 1	0-13 14: Sr0	0

Frequency command set with Sr0 is valid when FMOd= 14 (Sr0).
(Sr0 is valid even when the command mode selection is not CMOd=0.)

Setting from speed 1 to speed 15

Title	Function	Adjustment range	Default setting
Sr1- Sr7	Preset-speed frequency 1-7	LL - UL (Hz)	0.0
F287-.F294	Preset-speed frequency 8-15	LL - UL (Hz)	0.0

b) Speed (frequency) can be changed during operation.

Title	Function	Adjustment range	Default setting
F724	Operation frequency setting target by setting dial	0: Panel frequency (FC) 1: Panel frequency (FC) + Preset speed frequency	1

When F724= 1, speed (frequency) can be changed with the setting dial during operation. Set value of the Preset-speed frequency will change by pressing the center.

Note) When the other preset-speed command is input while adjusting frequency with the setting dial, operation frequency will change but not the inverter display and the subject of adjustment.

Ex) If Sr2 is input when operating under Sr 1 and changing frequency with the setting dial, operation frequency will change to Sr2 but inverter display and the subject of adjustment continue to be Sr 1. Press the center or MODE key to display Sr2.

Preset-speed logic input signal example: Slide switch SW1 = SINK side

O: ON -: OFF (Speed commands other than preset-speed commands are valid when all are OFF)

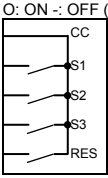

Terminal	Preset-speed														
	1	2	3	4	5	6	7	8	9	10	11	12	13	14	15
S1-CC	O	-	O	-	O	-	O	-	O	-	O	-	O	-	O
S2-CC	-	O	O	-	-	O	O	-	-	O	O	-	-	O	O
S3-CC	-	-	-	O	O	O	O	-	-	-	-	O	O	O	O
RES-CC	-	-	-	-	-	-	-	O	O	O	O	O	O	O	O

- Terminal functions are as follows.

  Terminal S1..... Input terminal function selection 4A (S1)
  F 1 14= 10 (Preset-speed command 1: SS1)

  Terminal S2..... Input terminal function selection 5 (S2)
  F 1 15= 12 (Preset-speed command 2: SS2)

  Terminal S3..... Input terminal function selection 6 (S3)
  F 1 16= 14 (Preset-speed command 3: SS3)

  Terminal RES..... Input terminal function selection 3A (RES)
  F 1 13= 16 (preset-speed command 4: SS4)

- In the default settings, SS4 is not assigned. Assign SS4 to RES with input terminal function selection.

[Example of a connection diagram]
(with sink logic settings)

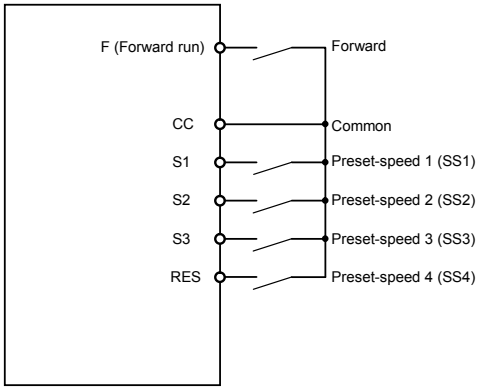

3) Using other speed commands with preset-speed command

Command mode selection CMOd		0: Terminal block	1: Panel keypad (including extension panel) 2: RS485 communication 3: CANopen communication 4: Communication option
Frequency setting mode selection FMOd		0:Setting dial 1 (including extension panel) (save even if power is off) 1: Terminal VIA 2: Terminal VIB 3: Setting dial 2 (including extension panel) (press in center to save)4: RS485 communication 5: UP/DOWN from external logic input 6: CANopen communication 7: Communication option 8: Terminal VIC 9, 10: - 11: Pulse train input 12, 13: - 14: Sr0	0:Setting dial 1 (including extension panel) (save even if power is off) 1: Terminal VIA 2: Terminal VIB 3: Setting dial 2 (including extension panel) (press in center to save) 4: RS485 communication 5: UP/DOWN from external logic input 6: CANopen communication 7: Communication option 8: Terminal VIC 9, 10: - 11: Pulse train input 12, 13: - 14: Sr0
Preset-speed command	Active	**Preset-speed command valid** Note)	**(The inverter doesn't accept Preset-speed command.)**
	Inactive	Command set with FMOd is valid	

Note) The preset-speed command is always given priority when other speed commands are input at the same time.

An example of three-speed operation with the default settings is shown below.
(Frequency settings are required for Sr 1 to 3.)

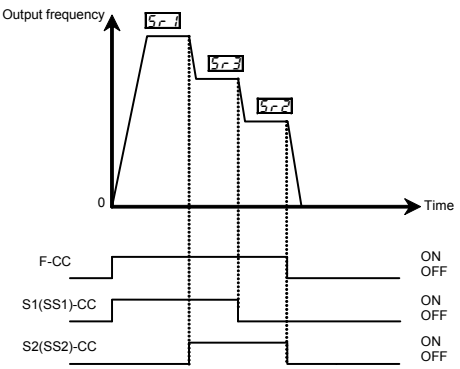

5.8 Switching between two frequency commands

FMOd: Frequency setting mode selection1

F200: Frequency priority selection

F207: Frequency setting mode selection2

- Function
  These parameters are used to switch between two frequency commands automatically or with input terminal signals.

Parameter setting

Title	Function	Adjustment range	Default setting
FMOd	Frequency setting mode selection 1	0: Setting dial 1 (including extension panel) (save even if power is off) 1: Terminal VIA 2: Terminal VIB 3: Setting dial 2 (including extension panel) (press in center to save) 4: RS485 communication 5: UP/DOWN from external logic input 6: CANopen communication 7: Communication option 8: Terminal VIC 9, 10: - 11: Pulse train input 12, 13: - 14: Sr0	0
F207	Frequency setting mode selection 2		1
F200	Frequency priority selection	0: FMOd (Switchable to F207 by terminal input) 1: FMOd (Switchable to F207 at 1.0 Hz or less of designated frequency)	0

Note) FMOd/F207 is set to 0 or 3, when frequency setting is used with an extension panel option.

1) Switching with input terminal signals (Input terminal function 104/105: FCHG)

Frequency priority selection parameter F200 = 0

Switch frequency command set with FMOd and F207 by the input terminal signals.
Assign frequency setting mode forced switching function (input terminal function selection: 104) to an input terminal.
If an OFF command is entered to the input terminal block: The frequency command set with FMOd.
If an ON command is entered to the input terminal block: The frequency command set with F207.

Note) Input terminal function 105 is the inverse signal of the above.

2) Automatic switching by frequency command

Frequency priority selection parameter F200 = 1

Switch frequency command set with FMOd and F207 automatically according to the frequency command entered.
If the frequency set with FMOd is above 1Hz: The frequency command set with FMOd
If the frequency set with FMOd is 1Hz or less: The frequency command set with F207

5.9 Auto-restart (Restart of coasting motor)

F301: Auto-restart control selection

Caution	
Mandatory action	• Stand clear of motors and mechanical equipment If the motor stops due to a momentary power failure, the equipment will start suddenly when power is restored. This could result in unexpected injury. • Attach caution label about sudden restart after a momentary power failure on inverters, motors and equipment for prevention of accidents in advance.

• Function

The F301 parameter detects the rotating speed and rotational direction of the motor during coasting at the event of momentary power failure, and then after power has been restored, restarts the motor smoothly (motor speed search function). This parameter also allows switching from commercial power operation to inverter operation without stopping the motor.

During operation, "retry" is displayed.

5

[Parameter setting]

Title	Function	Adjustment range	Default setting
F301	Auto-restart control selection	0: Disabled 1: At auto-restart after momentary stop 2: At ST terminal off and on 3: 1 + 2 4: At start-up	0

* If the motor is restarted in retry mode, this function will operate, regardless of the setting of this parameter.

1) Auto-restart after momentary power failure (Auto-restart function)

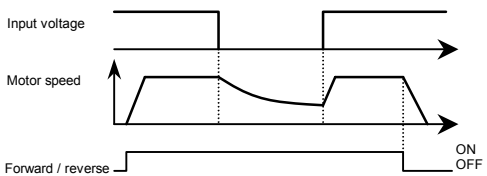

Setting F301 to 1 or 3: This function operates after power has been restored following detection of an undervoltage by the main circuits and control power.

2) Restarting motor during coasting (Motor speed search function)

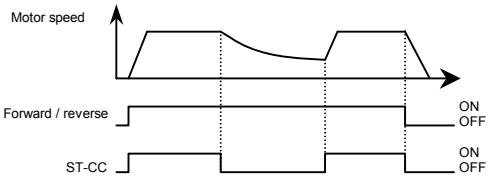

- Setting F301 to 2 or 3: This function operates after the ST-CC terminal connection has been opened first and then connected again.

Note 1: As the default setting for ST (Standby) is Always ON, change the following settings.
・F110= 1 (no function)
・Assign 6: ST (Standby) to an open input terminal.

3) Motor speed search at starting

When F301 is set to 4, a motor speed search is performed each time operation is started.
This function is useful especially when the motor is not operated by the inverter but by the external factor.

Warning!!
- At restart, it takes about 1 second for the inverter to check the number of revolutions of the motor. For this reason, the start-up takes more time than usual.
- Use this function when operating a system with one motor connected to one inverter. This function may not operate properly in a system configuration when multiple motors are connected to one inverter.
- In case of using this function, do not set the output phase failure detection selection (F605= 1, 2, 4).

Application to a crane or hoist
The crane or hoist may have its load to be moved downward during the above waiting time. To apply the inverter to such machines, therefore, set the auto-restart control mode selection parameter to "F301=0" (Disabled), Do not use the retry function, either.

Note 2: It is not malfunction that abnormal noise might be heard from the motor during the motor speed search at the auto-restart.

5.10 Changing operation panel display

5.10.1 Changing the unit (A/V) from a percentage of current and voltage

F701:Current/voltage unit selection

- Function
  These parameters are used to change the unit of monitor display.
  % ⇔ A (ampere)/V (volt)

Current 100% = Rated current of inverter
Voltage 100% = 200Vac (240V class), 400Vac (500V class)

■ Example of setting

During the operation of the VFS15-2015PM-W (rated current: 8.0A) at the rated load (100% load), units are displayed as follows:

1) Display in percentage terms 2) Display in amperes/volts

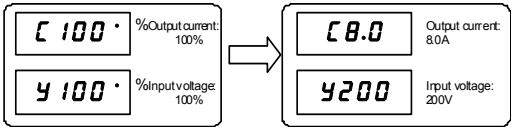

[Parameter setting]

Title	Function	Adjustment range	Default setting
F701	Current/voltage unit selection	0: % 1: A (ampere) / V (volt)	0

* The F701 converts the following parameter settings:

- A display : Current monitor display: Load current, torque current
  Motor electronic-thermal protection level 1 & 2 tHr, F173
  DC braking current F251
  Stall prevention level 1 & 2 F601, F185
  Small current detection current F611
  Brake releasing small current detection level F326
- V display : Voltage monitor display: Input voltage, output voltage
  V/f 5-point setting VF1-5 voltage F191, F193, F195, F197, F199

Note) Base frequency voltage 1 & 2(uLu, F171) always displayed in the unit of V.

5.10.2 Displaying the motor or the line speed

F702: Frequency free unit display magnification

F703: Frequency free unit coverage selection

F705: Inclination characteristic of free unit display

F706: Free unit display bias

• Function
The frequency or any other item displayed on the monitor can be converted into the rotational speed of the motor or load device. The unit of the amount of processing or that of feedback can be changed at PID control.

The value obtained by multiplying the displayed frequency by the F702-set value will be displayed as follows:

Value displayed = Monitor-displayed or parameter-set frequency × F702

1) Displaying the motor speed
To switch the display mode from 60Hz (default setting) to 1800min^{-1} (the rotating speed of the 4P motor)

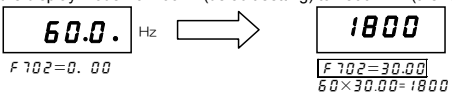

2) Displaying the speed of the loading unit
To switch the display mode from 60Hz (default setting) to 6m/min^{-1} (the speed of the conveyer)

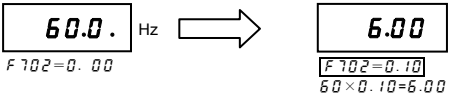

Note: This parameter displays the inverter output frequency as the value obtained by multiplying it by a positive number. This does not mean that the actual motor speed or line speed are indicated with accuracy.

[Parameter setting]

Title	Function	Adjustment range	Default setting
F702	Frequency free unit display magnification	0.00: Disabled (display of frequency) 0.01-200.0 (times)	0.00
F703	Frequency free unit coverage selection	0: All frequencies display 1: PID frequencies display	0
F705	Inclination characteristic of free unit display	0: Negative inclination (downward slope) 1: Positive inclination (upward slope)	1
F706	Free unit display bias	0.00-FH (Hz)	0.00

* The F702 converts the following parameter settings:

In case of F703=0

•Free unit	Frequency monitor display	Output frequency, Frequency command value, PID feedback value, Stator frequency, During stop: Frequency command value (During operation: Output frequency)
	Frequency-related parameters	FC, FH, UL, LL, Sr0 ~ Sr7, F100, F101, F102, F167, F190, F192, F194, F196, F198, F202, F204, F211, F213, F217, F219 F240, F241, F242, F250, F260, F265, F267, F268, F270 to F275, F287 ~ F294, F330, F331, F346, F350, F367, F368, F383, F390 to F393, F505, F513, F649, F812, F814, A923 to A927

In case of F703= 1

• Free unit	PID control -related parameters	FPId, F367, F368

Note) The unit of the Base frequency 1 and 2 are always Hz.

5

■ An example of setting when FH is 80 and F702 is 10.00

F705=1, F706=0.00

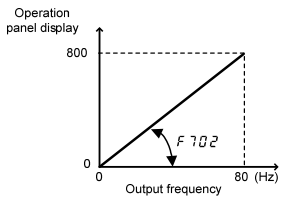

F705=1, F706=20.00

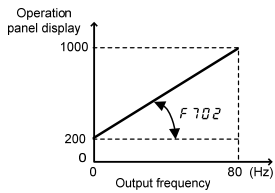

F705=0, F706=80.00

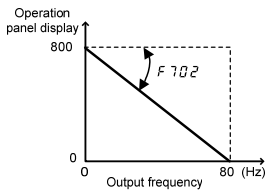

6. Other parameters

Extended parameters are provided for sophisticated operation, fine adjustment and other special purposes. Modify parameter settings as required. Refer to section 11. tables of parameters.

Refer to the corresponding sections regarding the following parameters.

Title	Function	Reference
AUL	Overload characteristic selection	5.6, 6.18
FMSL	Meter selection	5.1
FM	Meter adjustment gain	
ACC	Acceleration time 1	5.2
dEC	Deceleration time 1	
FH	Maximum frequency	5.3
UL	Upper limit frequency	5.4
LL	Lower limit frequency	
uL	Base frequency 1	5.5
uLu	Base frequency voltage 1	
tHr	Motor electronic-thermal protection level 1	5.6
OLM	Electronic-thermal protection characteristic selection	
Sr0-Sr7	Preset-speed frequency 0-7	5.7
FP Id	Process input value of PID control	6.24
tYP	Default setting	4.3.2
SEt	Checking the region setting	4.4
PSEL	EASY key mode selection	4.5
GrU	Automatic edit function	4.3.1
F200	Frequency priority selection	5.8
F207	Frequency setting mode selection 2	
F287-F294	Preset-speed frequency 8-15	5.7
F301	Auto-restart control selection	5.9
F519	Setting of acceleration/deceleration time unit	5.2
F607	Motor 150% overload detection time	5.6
F631	Inverter overload detection method	
F632	Electronic-thermal memory	
F657	Overload alarm level	
F701	Current/voltage unit selection	5.10.1
F702	Frequency free unit display magnification	5.10.2
F703	Frequency free unit coverage selection	
F705	Inclination characteristic of free unit display	
F706	Free unit display bias	
F724	Operation frequency setting target by setting dial	5.7
F750	EASY key function selection	4.5
F751-F782	Easy setting mode parameter 1-32	

6

6.1 Parameters useful for settings and adjustments

6.1.1 Searching for changes using the history function (AUH)

AUH : History function

History function (AUH):
Automatically searches for 5 latest parameters that are programmed with values different from the default setting and displays them in the AUH. Parameter setting can also be changed within this group AUH.

How to use the history function

Operation panel action	LED display	Operation
	0.0	Displays the output frequency (operation stopped). (When standard monitor display selection F710=0 [output frequency])
MODE	AUH	The first basic parameter "AUH" (history function) is displayed.
	ACC	The parameter that was set or changed last is displayed.
	8.0	Press the center of the setting dial to display the set value.
	5.0	Turn the setting dial to change the set value.
	5.0⇔ ACC	Press the center of the setting dial to save the changed value. The parameter name and the programmed value will flash on and off alternately.
	****	Turn the dial as described above to search for and display changed parameters to check and change the settings.
	HEAd (End)	HEAd: First historic record End: Last historic record
MODE MODE MODE	Parameter display ↓ AUH ↓ Fr-F ↓ 0.0	Press the MODE key to return to the parameter setting mode "AUH." After that you can press the MODE key to return to the status monitor mode or the standard monitor mode (display of output frequency).

Notes on operation

- If no history information is stored, this parameter is skipped and the next parameter "AUA" is displayed.
- HEAd and End are added respectively to the first and last parameters in a history of changes.

Note: The following parameters are not displayed in this AUH, even if they are the most recent changes.

FC (Operation frequency of operation panel),
AUL (Overload characteristic selection),
AU2 (Torque boost setting macro function),
SEt (Checking the region setting),
F737 (All key operation prohibition) ,
F739 (Password verification)
AUF (Guidance function),
AU1 (Automatic acceleration/deceleration),
tYP (Default setting),
F700 (Parameter protection selection) ,
F738 (Password setting (F700)) ,

6.1.2 Application easy setting (AUA)

AUA : Application easy setting

Application easy setting (AUA):
Parameters necessary to your machine can be set easily using the application easy setting.
The parameters necessary to the machine is set to easy setting mode parameters 1-32 (F751-F782). Set the parameters using the easy setting mode. (Refer to section 4.5.)

6

[Parameter setting]

Title	Function	Adjustment range	Default setting
AUA	Application easy setting	0:- 1: Initial easy setting 2: Conveyor 3: Material handling 4: Hoisting 5: Fan 6: Pump 7:Compressor	0

■ How to use the Application easy setting

1) Choose the machine

Operation panel action	LED display	Operation
	0.0	Displays the output frequency. (When standard monitor display selection F710 is set to 0 [output frequency])
MODE	AUH	The first basic parameter "AUH" (history function) is displayed.
	AUA	Turn the setting dial to the right to change the parameter to AUA.
	0	Set values are displayed by pressing the center of the setting dial.
	2	Turn the setting dial to the right to select 1 or 2.
	2⇔ AUA	Press the center of the setting dial to save the changed set value. AUA and the set value are displayed alternately.

2) The parameters necessary to the machine are set to easy setting mode parameter 1-32. (Refer to the chart bellow)

3) Set the parameters using easy setting mode. Refer to section 4.5 for easy setting mode.

Table of parameters that can be set using AUA

AUA	1: Initial easy setting	2: Conveyor	3: Material handling	4: Hoisting	5: Fan	6: Pump	7: Compressor
F751	C00d	C00d	C00d	C00d	C00d	C00d	C00d
F752	F00d	F00d	F00d	F00d	F00d	F00d	F00d
F753	ACC	ACC	ACC	ACC	ACC	ACC	ACC
F754	dEC	dEC	dEC	dEC	dEC	dEC	dEC
F755	UL	UL	UL	UL	FH	FH	FH
F756	LL	LL	LL	LL	UL	UL	UL
F757	tHr	tHr	tHr	tHr	LL	LL	LL
F758	F0	F0	F0	F0	tHr	tHr	tHr
F759	-	Pt	Pt	Pt	F0	F0	F0
F760	-	OLn	OLn	OLn	Pt	Pt	Pt
F761	-	Sr1	Sr1	F304	F201	F201	F216
F762	-	Sr2	Sr2	F308	F202	F202	F217
F763	-	Sr3	Sr3	F309	F203	F203	F218
F764	-	Sr4	Sr4	F328	F204	F204	F219
F765	-	Sr5	Sr5	F329	F207	F207	FP1d
F766	-	Sr6	Sr6	F330	F216	F216	F359
F767	-	Sr7	Sr7	F331	F217	F217	F360

F768	-	F201	F240	F332	F218	F218	F361
F769	-	F202	F243	F333	F219	F219	F362
F770	-	F203	F250	F334	F295	F295	F363
F771	-	F204	F251	F340	F301	F301	F366
F772	-	F240	F252	F341	F302	F302	F367
F773	-	F243	F304	F345	F303	F303	F368
F774	-	F250	F308	F346	F633	F610	F369
F775	-	F251	F309	F347	F667	F611	F372
F776	-	F252	F502	F400	F668	F612	F373
F777	-	F304	F506	F405	-	F633	F380
F778	-	F308	F507	F415	-	F667	F389
F779	-	F309	F701	F417	-	F668	F391
F780	-	F701	-	F648	-	-	F621
F781	F701	F702	-	F701	-	-	-
F782	PSEL	PSEL	PSEL	PSEL	PSEL	PSEL	PSEL

6.1.3 Setting a parameter using the guidance function (AUF)

AUF : Guidance function

Guidance function (AUF):
The guidance function refers to the special function of calling up only functions necessary to set up the inverter in response to the user's needs. When a purpose-specific guidance is selected, a group of parameters needed for the specified application (function) is formed and the inverter is switched automatically to the mode of setting the group of parameters selected. You can set up the inverter easily by simply setting the parameters in the group one after another. The guidance function (AUF) provides five purpose-specific guidance.

[Parameter setting]

Title	Function	Adjustment range	Default setting
AUF	Guidance function	0:- 1: - Note 1 2: Preset speed guidance 3: - Note 1 4: Motor 1&2 switching operation guidance 5: Motor constant setting guidance 6: - Note 1	0

Note1) 1, 3, and 6 are for manufacturer's settings. Do not change the settings.

■ How to use the guidance function

Here are the steps to follow to set parameters, using the guidance function. (When the Preset speed guidance AUF = 2)

Operation panel action	LED display	Operation
	0.0	Displays the operation frequency (output stopped). (When standard monitor display selection F710=0 is set to 0 [output frequency]).
MODE	AUH	The first basic parameter "History (AUH)" is displayed.
	AUF	Turn the setting dial to select the guidance function (AUF).
	0	Press the center of the setting dial to display 0.
	2	Turn the setting dial to change to the setting value "2".
	CMOd	Press the center of the setting dial to display the purpose-specific guidance parameter group (refer to following table).
	****	After moving to the purpose-specific guidance parameter group, use the setting dial to change the parameters.
	End	End is displayed on completion of the setting of the guidance parameter group.
MODE MODE MODE	Display of parameter ↓ AUF ↓ Fr-F ↓ 0.0	Press the MODE key to exit the guidance parameter group. Thereafter, return to the default monitoring mode (display of output frequency) by pressing the MODE key.

If there is anything you do not understand during this operation, press the MODE key several times to start over from he step of AUH display.

HEAd or End is affixed respectively to the first or last parameter in each guidance wizard parameter group.

Table of parameters that can be changed using the guidance function

Preset-speed setting AUF=2	Motor 1&2 switching operation AUF=4	Motor constant setting guidance AUF=5
CMOd	F111	Pt
FMOd	F112	uL
ACC	F113	uLu
dEC	F114	F405
FH	F115	F415
UL	F116	F417
F111	uL	F400
F112	uLu	
F113	ub	
F114	F415	
F115	tHr	
F116	F601	
Sr1	ACC	
Sr2	dEC	
Sr3	F170	
Sr4	F171	
Sr5	F172	
Sr6	F173	
Sr7	F185	
F287	F500	
F288	F501	
F289		
F290		
F291		
F292		
F293		
F294		

6

6.1.4 Automatically adjusting acceleration/deceleration time

AU1: Automatic acceleration/deceleration

- Function
  This automatically adjusts acceleration and deceleration time in line with load.
  Refer to section 5.2 for setting acceleration/ deceleration time manually.

AU1 = 1

* Adjusts the acceleration/deceleration time automatically within the range of 1/8 to 8 times as long as the time set with the ACC or dEC, depending on the current rating of the inverter.

AU1 =2

* Automatically adjusts speed during acceleration only. During deceleration, speed is not adjusted automatically but reduced at the rate set with dEC.

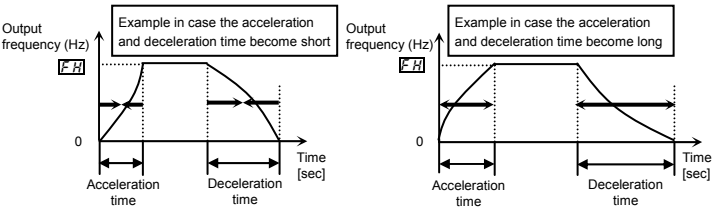

Set AU 1 (automatic acceleration/deceleration) to 1 or 2.

[Parameter setting]

Title	Function	Adjustment range	Default setting
AU 1	Automatic acceleration/deceleration	0: Disabled (manual setting) 1: Automatic 2: Automatic (only at acceleration)	0

- When automatically setting acceleration/deceleration time, always change the acceleration/deceleration time so that it conforms to the load. For inverters that require a fixed acceleration/deceleration time, use the manual settings (ACC, dEC).

6

- Setting acceleration/deceleration time (ACC, dEC) in conformance with mean load allows optimum setting that conforms to further changes in load.
- Use this parameter after actually connecting the motor.
- When the inverter is used with a load that fluctuates considerably, it may fail to adjust the acceleration or deceleration time in time, and therefore may be tripped.
- Do not set AU 1 = 1 when using a dynamic braking resistor (optional).

[Methods of setting automatic acceleration/deceleration]

Operation panel action	LED display	Operation
	0.0	Displays the output frequency. (When standard monitor display selection F710 is set to 0 [output frequency])
MODE	AUH	The first basic parameter "AUH" (history function) is displayed.
	AU 1	Turn the setting dial to the right to change the parameter to AU 1.
	0	Set values are displayed by pressing the center of the setting dial.
	1	Turn the setting dial to the right to switch 1 or 2.
	1⇔AU 1	Press the center of the setting dial to save the changed set value. AU 1 and the set value are displayed alternately.

- Assigning the fast stop command 2 (function number 122/ 123) to any logic input terminal, it can be changed automatic deceleration by compulsion.

6.1.5 Increasing starting torque

AU2: Torque boost setting macro function

- Function
  Simultaneously switches inverter output (V/F) control and programs motor constants automatically (On-line automatic-tuning function) to improve torque generated by the motor. This parameter integrates the selection of function including vector control and setting of auto-tuning.

[Parameter setting]

Title	Function	Adjustment range	Default setting
AU2	Torque boost setting macro function	0: - 1: Automatic torque boost + auto-tuning 2: Vector control + auto-tuning 3: Energy saving + auto-tuning	0

Note1) Parameter displays on the right always return to 0 after setting. The previous setting is displayed on the left.
Ex. 1 0

Note2) Auto-tuning is performed at the start of the motor.

Caution:
When the torque boost setting macro function AU2 is set, look at the motor's name plate and set the following parameters.

uL : Base frequency 1 (rated frequency)
uLu : Base frequency voltage 1 (rated voltage)
F405 : Motor rated capacity
F415 : Motor rated current
F417 : Motor rated speed

Set the other motor constants as necessary.

1) Increasing torque automatically according to the load

AU2 is set to 1 (Automatic torque boost + auto-tuning)

When torque boost setting macro function control AU2 is set to 1 (automatic torque boost + auto-tuning), the inverter keeps track of the load current in any speed range and automatically adjusts the output voltage to ensure enough torque and stable operation.

Note 1: The same characteristic can be obtained by setting the V/F control mode selection parameter Pt to 2 (automatic torque boost control) and the auto-tuning parameter F400 to 2 (auto-tuning).
⇒ Refer to section 6.25

Note 2: Setting AU2 to 1 automatically programs Pt to 2.

2) When using vector control (increasing starting torque and high-precision operations)

AU2 is set to 2 (Vector control + auto-tuning)

Setting torque boost setting macro function control AU2 to 2 (vector control + auto-tuning) provides high starting torque bringing out the maximum in motor characteristics from the low-speed range. This suppresses changes in motor speed caused by fluctuations in load to provide high precision operation. This is an optimum feature for elevators and other load transporting machinery.

Note 3: The same characteristic can be obtained by setting the V/F control mode selection parameter Pt to 3 (vector control) and the auto-tuning parameter F400 to 2 (auto-tuning).

⇒ Refer to section 6. 25

Note 4: Setting AU2 to 2 automatically programs Pt to 3.

3) Energy-saving operation

AU2 is set to 3 (Energy saving + auto-tuning)

When torque boost setting macro function control AU2 is set to 3 (energy saving + auto-tuning), the inverter always passes a current appropriate to the load for energy saving.

Note 5: The same characteristic can be obtained by setting the V/F control mode selection parameter Pt to 4 (automatic energy saving) and the auto-tuning parameter F400 to 2 (auto-tuning).

⇒ Refer to section 6. 25

Note 6: Setting AU2 to 3 automatically programs Pt to 4.

[Example of parameter setting]

Operation panel action	LED display	Operation
	0. 0	Displays the output frequency. (Perform during operation stopped.) (When standard monitor display selection F710 is set to 0 [output frequency])
MODE	AUH	The first basic parameter "AUH" (history function) is displayed.
	AU2	Turn the setting dial to the right to change the parameter to AU2 (torque boost setting macro function).
	0 0	Set values are displayed by pressing the center of the setting dial.
	0 3	Turn the setting dial to the right to change the parameter to 3 (energy saving + auto-tuning). (Right side is the setting value, left side is the history of the previous setting.)
	0 3⇔AU2	Press the center of the setting dial to save the changed parameter. AU2 and the parameter are displayed alternately.

If vector control cannot be programmed....
First read the precautions about vector control in section 6.3.9).
1) If the desired torque cannot be obtained ⇒ Refer to section 6.25 selection 2
2) If auto-tuning error "Etn 1" appears ⇒ Refer to section 6.25 selection 4

■ AU2 (Torque boost setting macro function) and Pt (V/F control mode selection)

Automatic torque boost is the parameter for setting V/F control mode selection (Pt) and auto-tuning (F400) together. That is why all parameters related to change automatically when AU2 is changed.

		Automatically programmed parameters			
AU2		Pt		F400	
0	Displays 0 after resetting	-	Check the programmed value of Pt.	-	
1	Automatic torque boost + auto-tuning	2	Automatic torque boost control	2	Auto-tuning executed (after execution: 0)
2	Vector control + auto-tuning	3	Vector control	2	Auto-tuning executed (after execution: 0)
3	Energy saving + auto-tuning	4	Energy-saving	2	Auto-tuning executed (after execution: 0)

6

4) Increasing torque manually (V/F constant control)

This is the setting of constant torque characteristics that are suited for such things as conveyors. It can also be used to manually increase starting torque.

If V/F constant control is programmed after changing AU2,

Set V/F control mode selection Pt = 0 (V/F constant).

⇒ Refer to section 6.3

Note 7: To further increase torque, increase the torque boost value 1(ub).
How to set the torque boost value 1(ub) ⇒ Refer to section 6.4

Note 8: V/F control selection Pt = 1 (variable torque) is an effective setting for load such as fans and pumps. ⇒ Refer to section 6.3

6.2 Selection of operation mode

6.2.1 Selection of start/stop and frequency settings

CMOd: Command mode selection

FMOd: Frequency setting mode selection

- Function
  These parameters are used to specify which input device (panel keypad, terminal block, or communication) takes priority in entering an operation stop command or frequency setting mode (terminal VIA/VIB/VIC, setting dial, communication, or UP/DOWN from external logic).

<Command mode selection>

[Parameter setting]

Title	Function	Adjustment range	Default setting
CMOd	Command mode selection	0: Terminal block 1: Panel keypad (including extension panel) 2: RS485 communication 3: CANopen communication 4: Communication option	1

[Programmed value]

0: Terminal block operation — ON and OFF of an external signal run and stop operation.

1: Panel keypad operation — Press the RUN and STOP keys on the panel keypad to run and stop. Operation can also be done from the extension panel.

2: RS485 communication — Run/stop operations by RS485 communication from an external device.
⇒ Refer to section 6.38.

3: CANopen communication — Run/stop operations by CANopen communication from an external device.
⇒ Refer to “CANopen communication Instruction Manual E6581911”.

4: Communication option — Run/stop operations by commands from a communication option.
⇒ Refer to each Instruction Manual of option.

* Operation command selected by CMOd and the operation commands from the terminal block can be switched alternately with ON/ OFF of input terminal. (input terminal function number 108, 109) See the table of input terminal function selection in section 11.6.

* When priority is given to commands from a linked computer or terminal block, they have priority over the setting of CMOd.

<Frequency setting mode selection>

[Parameter setting]

Title	Function	Adjustment range	Default setting
F00d	Frequency setting mode selection 1	0: Setting dial 1 (including extension panel option) (save even if power is off) 1: Terminal VIA 2: Terminal VIB 3: Setting dial 2 (including extension panel option) (press in center to save) 4: RS485 communication 5: UP/DOWN from external logic input 6: CANopen communication 7: Communication option 8: Terminal VIC 9, 10: - 11: Pulse train input 12, 13: - 14: Sr0	0

[Programmed value]

0: Setting dial 1

Frequencies are set by rotating the setting dial on the inverter and an extension panel option. Like the position of notches in a volume knob, the frequency setting value at the position of the notch is saved.

⇒ Refer to section 3.2.2

1: Terminal VIA

A frequency command is set by means of external analog signals.
(VIA terminal: 0 –10Vdc)

⇒ Refer to section 3.2.2 and 7.3

2: Terminal VIB

A frequency command is set by means of external analog signals.
(VIB terminal: 0 - +10Vdc or -10 - +10Vdc)

⇒ Refer to section 3.2.2 and 7.3

3: Setting dial 2

Frequencies are set by rotating the setting dial on the inverter and an extension panel option. Press the center of the setting dial to save the frequency setting value.

⇒ Refer to section 3.2.2

4: RS485 communication

Frequencies are set by RS485 communication from an external device.

⇒ Refer to section 6.38

5: UP/DOWN from external logic input

Frequencies are set by up/down commands from a terminal.

⇒ Refer to section 6.10.4

6: CANopen communication

Frequencies are set by CANopen communication from an external device.

⇒ Refer to “CANopen communication Instruction Manual E6581911”.

7:	Communication option	Frequencies are set by commands from a communication option. ⇒ Refer to each Instruction Manual of option.
8:	Terminal VIC	A frequency command is set by means of external analog signals. (VIC terminal: 0 (4) - 20mAdc) ⇒ Refer to section 3.2.2 and 7.3
11:	Pulse train input	A frequency command is set by means of external pulse train signals. (S2 terminal: 10pps – 2kpps) ⇒ Refer to section 6.10.5
14:	Sr0	Frequencies are set by Sr0 parameter. ⇒ Refer to section 5.7.

- The control input terminal in which the following functions are set is always valid regardless of the setting of CMOd and FMOd.
  - Reset (valid only for tripping)
  - Standby
  - External input tripping stop command
  - Coast stop command terminal
- To make changes in the command mode selection CMOd and the frequency setting mode selection 1 FMOd, first stop the inverter temporarily.
  (Can be changed while in operation when F736 is set to 0.)
- Priority commands from communications or terminal blocks are given priority over FMOd.

■ Preset-speed operation

CMOd: Set to 0 (Terminal block operation)
FMOd: Valid in all setting values.

■ Input terminal settings

Assign the following functions to the input terminal to allow switching of the frequency command by turning the terminal ON/OFF.

Input terminal function		ON	OFF
48	Forced local from communication	Enabled during communication Local (Setting of CMOd, FMOd)	Communication
106	Frequency setting mode terminal block	Terminal block (VIA) enabled	setting of FMOd

Each of the following numbers (49, 107) are reverse signals.

■ Example of run and frequency command switching

Command mode and frequency setting mode switching

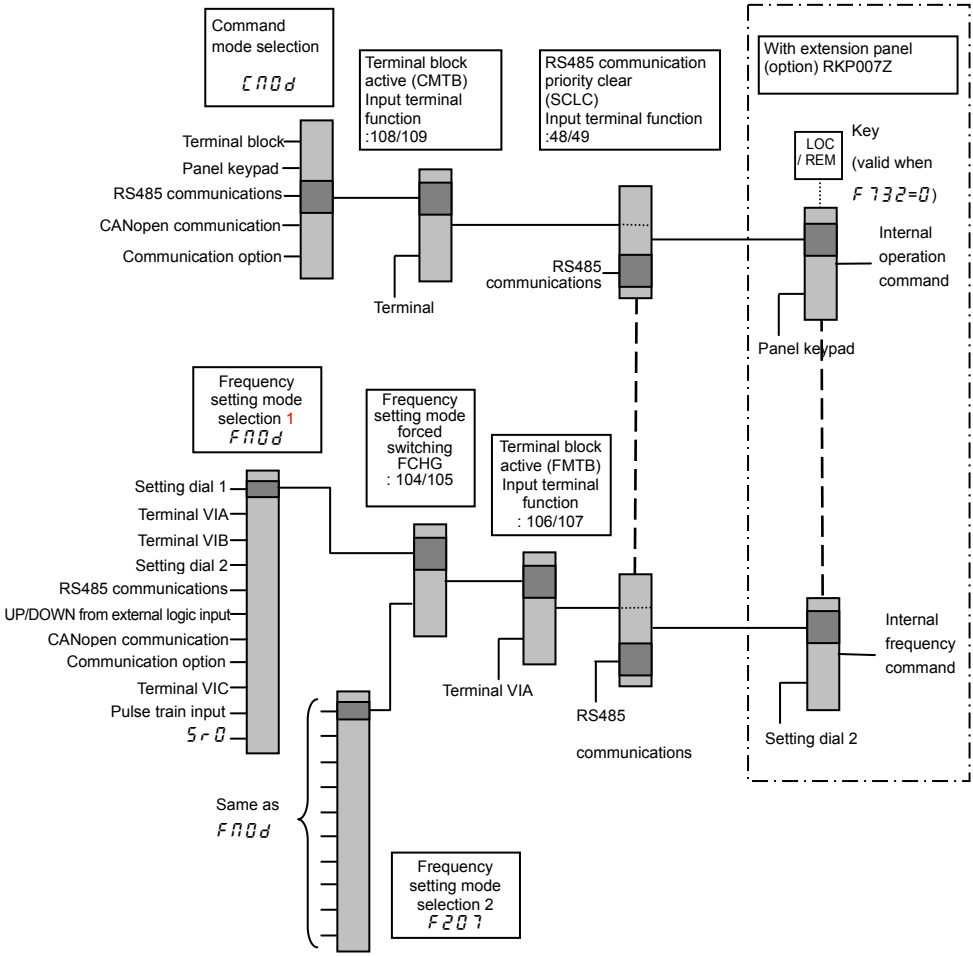

6.2.2 Forward/reverse run selection (Panel keypad)

Fr: Forward/reverse run selection (Panel keypad)

- Function
  Program the direction of rotation of the motor when the running and stopping are made using the RUN key and STOP key on the operation panel.
  Valid when CMOd (command mode) is set to 1 (operation panel).

[Parameter setting]

Title	Function	Adjustment range	Default setting
Fr	Forward/reverse run selection (Panel keypad)	0: Forward run 1: Reverse run 2: Forward run (F/R switching on extension panel) 3: Reverse run (F/R switching on extension panel)	0

- Using extension panel RKP007Z (option) : When Fr is set to 2 and the standard monitor is displayed, pressing the FWD/REV key changes the direction of rotation from forward to reverse after displaying the message Fr-r.
  Pressing the FWD/REV key again changes the direction of rotation from reverse to forward after displaying the message Fr-F.
- Using extension panel RKP002Z (option) : When Fr is set to 2 and the standard monitor is displayed, pressing the DOWN key while pressing the ENT key changes the direction of rotation from forward to reverse after displaying the message Fr-r.
  Pressing the UP key while pressing the ENT key again changes the direction of rotation from reverse to forward after displaying the message Fr-F.
- Check the direction of rotation on the status monitor. Refer to section 8.1 for details about monitor.
  Fr-F: Forward run
  Fr-r: Reverse run
- When the F and R terminals are used for switching between forward and reverse rotation from the terminal block, the Fr forward/reverse run selection parameter is rendered invalid.
  Short across the F-CC (Sink logic) or P24-F (Source logic) terminals: forward rotation
  Short across the R-CC (Sink logic) or P24-R (Source logic) terminals: reverse rotation
- You can use the parameter F105 to select deceleration stop or reverse run for the action when both forward and reverse run signals from terminal block are ON simultaneously. The motor will decelerate to stop when the inverter was factory-configured by default.

6.3 Selecting control mode

Pt: V/F control mode selection

- Function
  The V/F controls shown below can be selected.

○ V/F constant
○ Variable torque
○ Automatic torque boost control *1
○ Vector control *1
○ Energy saving *1
○ Dynamic energy-saving (For fan and pump)
○ PM motor control
○ V/F 5-point setting

*1 Parameter setting macro torque boost: Au2 parameter can automatically set this parameter and auto-tuning at a time. (Refer to section 6.1.5)

[Parameter setting]

Title	Function	Adjustment range	Default setting
Pt	V/F control mode selection	0: V/F constant 1: Variable torque 2: Automatic torque boost control 3: Vector control 4: Energy-saving 5: Dynamic energy-saving (For fan and pump) 6: PM motor control 7: V/F 5-point setting 8: - *3	*2

*2: Default setting values vary depending on the setup menu setting. Refer to section 11.5.

*3: 8 is manufacturer setting parameter. Do not change the value of this parameter.

Note: Pt (V/F control mode selection) is valid only for the first motor.
Changes to "V/F constant control" when switching to the second motor, regardless of the Pt setting.

Steps in setting are as follows

(In this example, the V/F control mode selection parameter Pt is set to 3 (Vector control).

[Setting V/F control mode selection to 3 (sensorless vector control)]

Operation panel action	LED display	Operation
	0.0	Displays the output frequency. (Perform during operation stopped.) (When standard monitor display selection F710 is set to 0 [output frequency])
MODE	AUH	The first basic parameter "AUH" (history function) is displayed.
	Pt	Rotate the setting dial to the right, and change the parameter to Pt (V/F control mode selection).
	2	Set values are displayed by pressing the center of the setting dial.
	3	Rotate the setting dial to the right, and change the parameter to 3 (vector control).
	3 ⇔ Pt	Press the center of the setting dial to save the changed set value. Pt and the set value "3" are displayed alternately.

6

Caution:

When the V/F control mode selection Pt is set to 2: Automatic torque boost control, 3: Vector control, 4: Energy-saving, 5: Dynamic energy-saving, or 6: PM motor control, be sure to set the following parameters according to the motor's name plate.

uL : Base frequency 1 (rated frequency)
uLu : Base frequency voltage 1 (rated voltage)
F405 : Motor rated capacity
F415 : Motor rated current
F417 : Motor rated speed

Set the other motor constants as necessary

1) Constant torque characteristics

Setting of V/F control mode selection Pt to 0 (V/F constant)

This is applied to loads with equipment like conveyors and cranes that require the same torque at low speeds as at rated speeds.

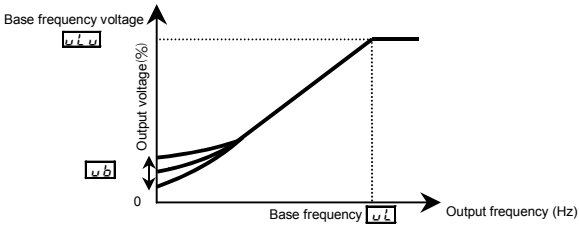

* To increase the torque further, increase the setting value of the manual torque boost value 1 (ub).

⇒ Refer to section 6.4 for details.

2) Setting for fans and pumps

Setting of V/F control mode selection Pt to 1 (variable torque)

This is appropriate for load characteristics of such things as fans, pumps and blowers in which the torque is proportional to the square of load rotation speed.

.

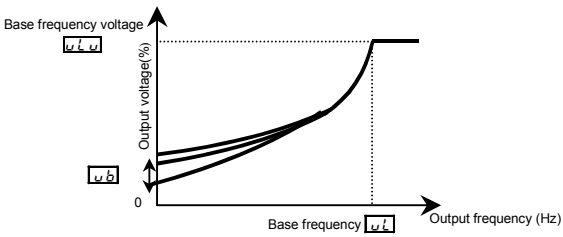

3) Increasing starting torque

Setting of V/F control mode selection Pt to 2 (automatic torque boost control)

Detects load current in all speed ranges and automatically adjusts voltage output (torque boost) from inverter. This gives steady torque for stable runs.

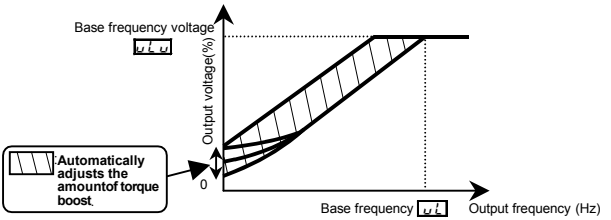

Note: This control system can oscillate and destabilize runs depending on the load. In this case, set V/F mode selection Pt=0 (V/F constant) and increase manual torque boost ub.

- **Motor constant must be set**

If the motor you are using is a 4P Toshiba standard motor which has the same capacity as the inverter, there is basically no need to set the motor constant. There are three setting methods as mentioned below. In any method, set the following parameters according to the motor's name plate.

uL (Base frequency 1), uLu (Base frequency voltage 1), F405 (Motor rated capacity), F415 (Motor rated current), F417 (Motor rated speed)

1) Simultaneous setting of auto torque boost and auto-tuning (F400=2)
   Set the basic parameter AU2 (Torque boost setting macro function) to 1.
   ⇒ Refer to section 6.1.5 for details.
2) Automatic setting
   Set the extended parameter F400 (auto-tuning) to 5. ⇒ Refer to section 6.25 selection 2 for details.
3) Manual setting
   Set each motor constant. ⇒ Refer to section 6.25 selection 4 for details.

4) Vector control - increasing starting torque and achieving high-precision operation.

Setting of V/F control mode selection Pt to 3 (Vector control)

Using sensorless vector control will provide the highest torque at the low speed ranges.

(1) Provides large starting torque.
(2) Effective when stable operation is required to move smoothly up from the low speeds.
(3) Effective in elimination of load fluctuations caused by motor slippage.

- **Motor constant must be set**

If the motor you are using is a 4P Toshiba standard motor which has the same capacity as the inverter, there is basically no need to set the motor constant. There are three setting methods as mentioned below. In any method, set the following parameters according to the motor's name plate.

uL (Base frequency 1), uLu (Base frequency voltage 1), F405 (Motor rated capacity), F415 (Motor rated current), F417 (Motor rated speed)

1) Simultaneous setting of vector control and auto-tuning (F400=2)
   Set the basic parameter AU2 (Torque boost setting macro function) to 2
   ⇒ Refer to section 6.1.5 for details.
2) Automatic setting
   Set the extended parameter F400 (auto-tuning) to 5. ⇒ Refer to section 6.25 selection 2 for details.
3) Manual setting
   Set each motor constant. ⇒ Refer to section 6.25 selection 4 for details.

5) Energy-saving

Setting of V/F control mode selection Pt to 4 (Energy-saving)

Energy can be saved in all speed areas by detecting load current and flowing the optimum current that fits the load.
If the motor you are using is a 4P Toshiba standard motor which has the same capacity as the inverter, there is basically no need to set the motor constant. There are three setting methods as mentioned below. In any method, set the following parameters according to the motor's name plate.
uL (Base frequency 1), uLu (Base frequency voltage 1), F405 (Motor rated capacity), F415 (Motor rated current), F417 (Motor rated speed)

1) Simultaneous setting of energy-saving and auto-tuning (F400=2)
   Set the basic parameter AU2 (Torque boost setting macro function) to 3
   ⇒ Refer to section 6.1.5 for details.
2) Automatic setting
   Set the extended parameter F400 (auto-tuning) to 5. ⇒ Refer to section 6.25 selection 2 for details.
3) Manual setting
   Set each motor constant. ⇒ Refer to section 6. 25 selection 4 for details.

6) Achieving further energy savings

Setting of V/F control mode selection Pt to 5 (Dynamic energy-saving)

More substantial energy savings than those provided by setting Pt to 4 can be achieved in any speed range by keeping track of the load current and passing a current appropriate to the load. The inverter cannot respond to rapid load fluctuations, so that this feature should be used only for loads, such as fans and pumps, that are free of violent load fluctuations.

● Motor constant must be set

If the motor you are using is a 4P Toshiba standard motor which has the same capacity as the inverter, there is basically no need to set the motor constant. There are two setting methods as mentioned below. In any method, set the following parameters according to the motor's name plate.
uL (Base frequency 1), uLu (Base frequency voltage 1), F405 (Motor rated capacity), F415 (Motor rated current), F417 (Motor rated speed)

1) Automatic setting
   Set the extended parameter F400 (auto-tuning) to 5. ⇒ Refer to section 6.25 selection 2 for details.
2) Manual setting
   Set each motor constant. ⇒ Refer to section 6.25 selection 4 for details.

7) Operating a permanent magnet motor

Setting of V/F control mode selection Pt to 6 (PM motor control)

Permanent magnet motors (PM motors) that are light, small in size and highly efficient, as compared to induction motors, can be operated in sensor-less operation mode.
Note that this feature can be used only for specific motors. For more information, contact your Toshiba distributor.

8) Setting of V/f characteristic arbitrarily

Setting of V/f control mode selection Pt to 7 (V/f 5-point setting)

In this mode, the base frequency and the base frequency voltage for the V/f control need to be set to operate the motor while switching a maximum of 5 different V/f characteristics.

[Parameter setting]

Title	Function	Adjustment range	Default setting
F190	V/f 5-point setting VF1 frequency	0.0~FH (Hz)	0.0
F191	V/f 5-point setting VF1 voltage	0.0~125.0 (%) / (V) *	0.0
F192	V/f 5-point setting VF2 frequency	0.0~FH (Hz)	0.0
F193	V/f 5-point setting VF2 voltage	0.0~125.0 (%) / (V) *	0.0
F194	V/f 5-point setting VF3 frequency	0.0~FH (Hz)	0.0
F195	V/f 5-point setting VF3 voltage	0.0~125.0 (%) / (V) *	0.0
F196	V/f 5-point setting VF4 frequency	0.0~FH Hz	0.0
F197	V/f 5-point setting VF4 voltage	0.0~125.0 (%) / (V) *	0.0
F198	V/f 5-point setting VF5 frequency	0.0~FH (Hz)	0.0
F199	V/f 5-point setting VF5 voltage	0.0~125.0 (%) / (V) *	0.0

* 100% value is 200V for 240V class, and 400V for 500V class.

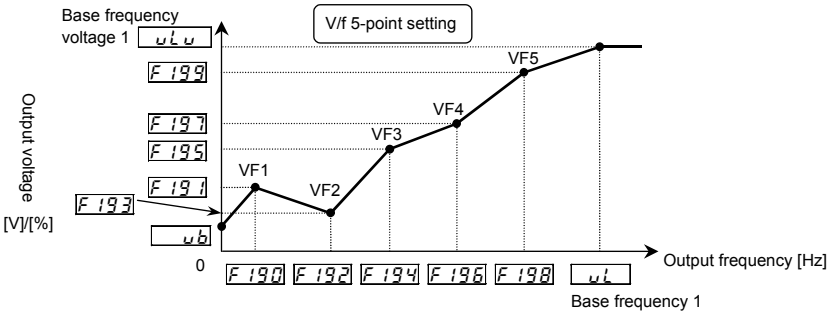

Note 1: Restrict the value of torque to boost (ub) to 3% or so. Boosting the torque too much may impair the linearity between points.

Note 2: Please note if the inclination of each V/f is too high (exceeding 8.25%/Hz), A-02 (Points setting alarm 2) will occur.

9) Cautions for vector control

1) When performing vector control, look at the motor's name plate and set the following parameters.
   uL (Base frequency 1), uLu (Base frequency voltage 1), F405 (Motor rated capacity), F415 (Motor rated current), F417 (Motor rated speed)
2) The sensorless vector control exerts its characteristics effectively in frequency areas below the base frequency (uL). The same characteristics will not be obtained in areas above the base frequency.
3) Set the base frequency to anywhere from 40 to 120Hz during vector control (Pt=3).
4) Use a general purpose squirrel-cage motor with a capacity that is the same as the inverter's rated capacity or one rank below. The minimum applicable motor capacity is 0.1kW.
5) Use a motor that has 2-8 P.
6) Always operate the motor in combination of one motor for one inverter. Sensorless vector control cannot be used when one inverter is operated with more than one motor.
   When using a combination of several motors, set the V/F constant (Pt=0).
7) The maximum length of wires between the inverter and motor is 30 meters. If the wires are longer than 30 meters, set standard auto-tuning with the wires connected to improve low-speed torque during sensorless vector control.
   However the effects of voltage drop cause motor-generated torque in the vicinity of rated frequency to be somewhat lower.
8) When a reactor is connected between the inverter and a motor, the motor's generated torque may fall. Setting auto-tuning may also cause a trip (Etn1) rendering sensorless vector control unusable.

6.4 Manual torque boost - increasing torque boost at low speeds

ub: Torque boost value 1

- Function
  If torque is inadequate at low speeds, increase torque by raising the torque boost rate with this parameter.

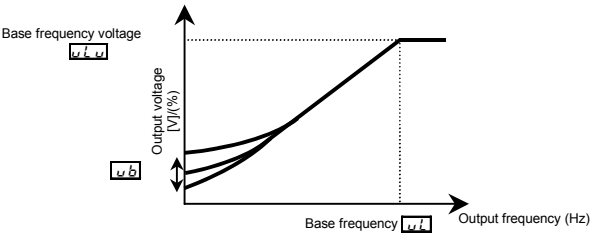

[Parameter setting]

Title	Function	Adjustment range	Default setting
ub	Torque boost value 1	0.0 - 30.0 (%)	According to model (Refer to section 11.4)

- Valid when Pt is set to 0 (V/F constant), 1 (Variable torque), or 7 (V/F 5-point setting).

Note 1: The optimum value is programmed for each inverter capacity by default setting. Be careful not to increase the torque boost rate too much because it could cause an overcurrent trip at startup.

6.5 Signal Output

6.5.1 Output running signal and braking signal (Low-speed signal)

Refer to section 7.2.2 for output terminal function.

F100: Low-speed signal output frequency

- Function
  When the output frequency exceeds the setting of F100, an ON signal will be generated. This signal can be used as an operation signal when F100 is set to 0.0Hz, because an ON signal is put out if the output frequency exceeds 0.0Hz. This signal can also be used as an electromagnetic brake excitation/release signal.
  - Output from the relay output terminal RY-RC. (Default)
    Output from the terminal FLA-FLB-FLC and OUT are possible by the parameter settings.

[Parameter setting]

Title	Function	Adjustment range	Default setting
F100	Low-speed signal output frequency	0.0 - FH (Hz)	0.0

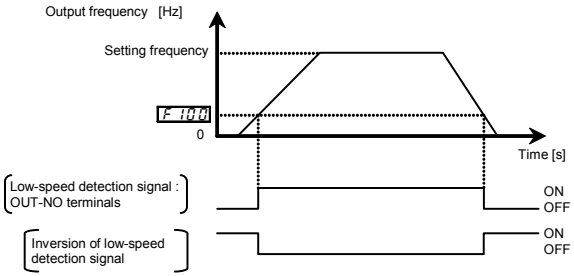

- Output terminal setting
  Low-speed signal (ON signal) is output from RY-RC terminal by default setting.
  Change this setting to invert the polarity of the signal.
  [Parameter setting]

Title	Function	Adjustment range	Default setting
F130	Output terminal selection 1A (RY-RC)	0-255 (Refer to section 11.7)	4: LOW (Low-speed detection signal)

Setting value 5 is reverse signal.
Note) Set F132 to output to FLA-FLC-FLB terminals and F131 to OUT terminal.

6.5.2 Output of designated frequency reach signal

F102: Speed reach detection band

- Function
  When the output frequency becomes equal to the setting by designated frequency ± F102, an ON or OFF signal is generated.

[Parameter setting]

■Parameter setting of designated frequency and detection band

Title	Function	Adjustment range	Default setting
F102	Speed reach detection band	0.0-FH (Hz)	2.5

■Parameter setting of output terminal selection

Title	Function	Adjustment range	Default setting
F131	Output terminal selection 2A (OUT)	0-255 (Refer to section 11.7.)	6: RCH (Output frequency attainment signal (acceleration/deceleration completed))

Setting value 7 is reverse signal.

Note: Set F132 to output to FLA-FLC-FLB terminals and F130 to RY-RC terminal.

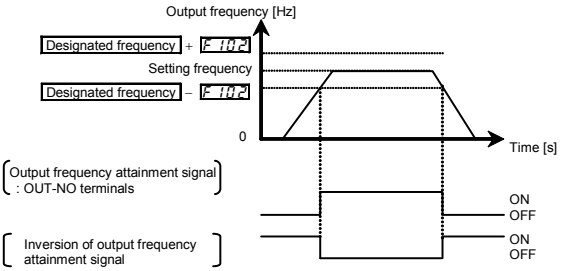

6.5.3 Output of set frequency speed reach signal

F101: Speed reach setting frequency

F102: Speed reach detection band

- Function
  When the output frequency becomes equal to the frequency set by F101±F102, an ON or OFF signal is generated.

[Parameter setting]

■Parameter setting of frequency and detection band

Title	Function	Adjustment range	Default setting
F101	Speed reach setting frequency	0.0-FH (Hz)	0.0
F102	Speed reach detection band	0.0-FH (Hz)	2.5

■Parameter setting of output terminal selection

Title	Function	Adjustment range	Setting
F131	Output terminal selection 2A (OUT)	0-255 (Refer to section 11.7.)	8: RCHF (Set frequency attainment signal)

Setting value 9 is reverse signal.

Note: Set F132 to assign to FLA-FLC-FLB terminals and F130 to RY-RC terminal.

If the detection band value + the set frequency is less than the designated frequency

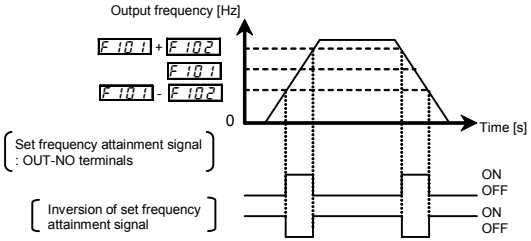

6.6 Input signal selection

6.6.1 Priority selection (Both F and R are ON)

F105: Priority selection (Both F and R are ON)

- Function
  This parameter allows you to select the direction in which the motor runs when a forward run (F) command and a reverse run (R) command are entered simultaneously.
  1) Reverse
  2) Deceleration stop

[Parameter setting]

Title	Function	Adjustment range	Default setting
F105	Priority selection (Both F and R are ON)	0: Reverse 1: Deceleration stop	1

(1) [F105 = 0 (Reverse)]: If an F command and an R command are entered simultaneously, **the motor will run in the reverse direction.**

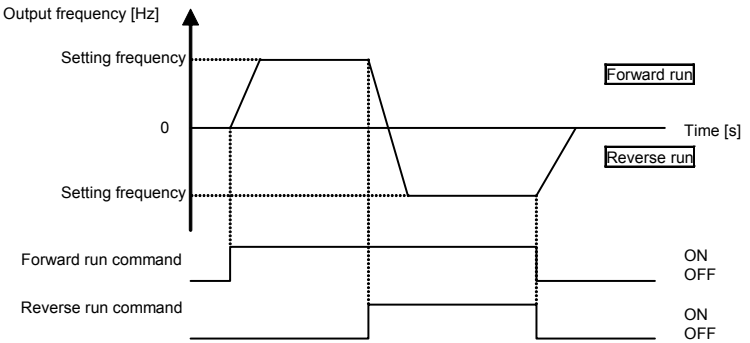

(2) [F 105 = 1 (Stop)]: If an F command and an R command are entered simultaneously, **the motor will deceleration stop.**

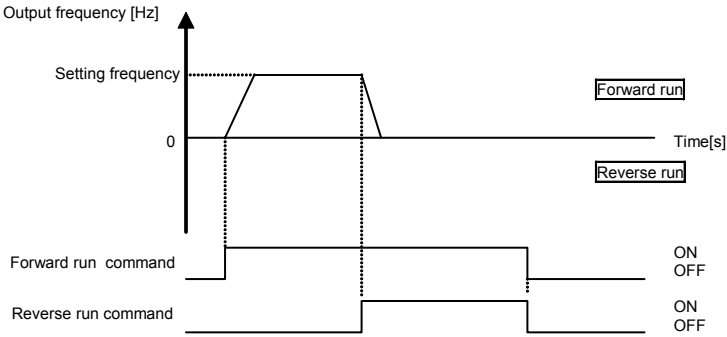

6.6.2 Changing the voltage range of VIB terminal

F 107: Analog input terminal selection (VIB)

- Function
  This parameter allows you to choose the voltage signal input for the VIB terminal.

[Parameter setting]

Title	Function	Adjustment range	Default setting
F 107	Analog input terminal selection (VIB)	0: 0-+10V 1: -10-+10V	0

- F 107=0 : Input 0 to +10Vdc to VIB-CC terminals.
  Resolution is maximum 1/1000 between 0 to +10Vdc.
- F 107= 1 : Input -10 to +10Vdc to VIB-CC terminals.
  Resolution is maximum 1/2000 between -10 to +10Vdc.

6.6.3 Changing the functions of VIA and VIB terminals

F109: Analog/logic input selection (VIA/VIB)

- Function
  This parameter allows you to choose between analog signal input and contact signal input for the VIA and VIB terminals.

[Parameter setting]

Title	Function	Adjustment range	Default setting
F109	Analog/logic input selection (VIA/VIB)	0: VIA - analog input VIB - analog input	0
		1: VIA - analog input VIB - contact input	
		2: -	
		3: VIA - contact input (Sink) VIB - contact input	
		4: VIA - contact input (Source) VIB - contact input	

Note) When using VIA terminal as contact input terminals, be sure to insert a resistor between P24 terminal and VIA terminal in sink logic connection, and insert a resistor between VIA terminal and CC terminal in source logic connection. (Recommended resistance: 4.7kΩ-1/2W)
When using VIB terminal as contact input terminals, set the upper side of slide switch SW2 to S4 side and then set F109.

6.7 Terminal function selection

6.7.1 Keeping an input terminal function always active (ON)

F104: Always active function selection 1

F108: Always active function selection 2

F110: Always active function selection 3

- Function
  This parameter specifies an input terminal function that is always to be kept active (ON).

[Parameter setting]

Title	Function	Adjustment range	Default setting
F104	Always active function selection 1	0-7, 10-153: Refer to section 11.6. 8,9: -	0 (No function)
F108	Always active function selection 2	0-7, 10-153: Refer to section 11.6. 8,9: -	0 (No function)
F110	Always active function selection 3	0-7, 10-153: Refer to section 11.6. 8,9: -	6 (ST)

Explanation of the coast stop function
When ST (Standby) is OFF, coast stops.
The default setting for ST (Standby) is ON. Please change the following settings:
・ F110=0 (no function)
・ Assign open input terminal 6: ST (Standby).
Coast stops if terminal set for ST (Standby) is set to OFF. The monitor on the inverter at this time displays OFF

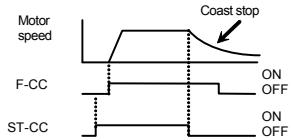

Note1) Input terminal function 8, 9 (Reset command and its inversion) cannot be assigned.

6.7.2 Modifying input terminal functions

F111: Input terminal selection 1A (F)

F112: Input terminal selection 2A (R)

F113: Input terminal selection 3A (RES)

F114: Input terminal selection 4A (S1)

F115: Input terminal selection 5 (S2)

F116: Input terminal selection 6 (S3)

F109: Analog/logic input selection (VIA/VIB)

F117: Input terminal selection 7 (VIB)

F118: Input terminal selection 8 (VIA)

F151: Input terminal selection 1B (F)

F152: Input terminal selection 2B (R)

F153: Input terminal selection 3B (RES)

F154: Input terminal selection 4B (S1)

F155: Input terminal selection 1C (F)

F156: Input terminal selection 2C (R)

F144: Input terminal response time

F146: Logic input/ pulse input selection (S2)

F147: Logic input/ PTC input selection (S3)

⇒ Refer to section 7.2.1 for details about input terminal functions.

6.7.3 Modifying output terminal functions

F130: Output terminal selection 1A (RY-RC)

F131: Output terminal selection 2A (OUT)

F132: Output terminal selection 3 (FL)

F137: Output terminal selection 1B (RY-RC)

F138: Output terminal selection 2B (OUT)

F139: Output terminal logic selection (RY-RC, OUT)

⇒ Refer to section 7.2.2 for details about output terminal functions.

6.8 Basic parameters 2

6.8.1 Switching motor characteristics via terminal input

F170: Base frequency 2

F171: Base frequency voltage 2

F172: Torque boost value 2

F173: Motor electronic-thermal protection level 2

F185: Stall prevention level 2

- Function
  Use the above parameters to switch the operation of two motors with a single inverter and to select motor V/F characteristics (two types) according to the particular needs or operation mode.

  Note: The Pt (V/F control mode selection) parameter is enabled only for motor 1.
  If motor 2 is selected, V/F control will be given constant torque characteristics.

[Parameter setting]

Title	Function	Adjustment range	Default setting
F170	Base frequency 2	20.0-500.0	*1
F171	Base frequency voltage 2	50-330 (V) (240V class) 50-660 (V) (500V class)	*1
F172	Torque boost value 2	0.0-30.0 (%)	Depending on model (Refer to section 11.4)
F173	Motor electronic-thermal protection level 2	10-100 (%) / (A) *2	100
F185	Stall prevention level 2	10-199 (%) / (A), 200 : Disabled *2	150

*1: Default setting values vary depending on the setup menu. Refer to section 11.5.

*2: The inverter's rated current is 100%. When F701 (current and voltage unit selection) = 1 (A (amps)/V (volts)) is set, it can be set at A (amps).

■ Setting of switching terminals

To switch to motor 2, assign the following functions to a terminal not being used. It is also possible to switch to acceleration/deceleration 2 (AD2). Refer to section 6.27 for details.
It is possible to set 3 functions for terminal F and R, and 2 functions for terminal S1 and RES.

Input terminal function number					Parameters changed from applicable parameters and default standards
24 AD2	26 AD3	28 VF2	32 OCS2	152 MOT2	
OFF	OFF	OFF	OFF	OFF	Default setting : Pt, uL, uLu, ub, tHr, ACC, dEC, F502, F601
ON	OFF	OFF	OFF	OFF	ACC→F500, dEC→F501, F502→F503
OFF	ON	OFF	OFF	OFF	ACC→F510, dEC→F511, F502→F512
OFF	OFF	ON	OFF	OFF	During stop : Pt→V/F constant, uL→F170, uLu→F171, ub→F172, tHr→F173 During run : uL→F170, uLu→F171, ub→F172
OFF	OFF	OFF	ON	OFF	F601 →F185
-	OFF	-	-	ON	Pt→0, uL→F170, uLu→F171, ub→F172, tHr→F173(tHr is fixed when F632=2or3), F601→F185,ACC→F500, dEC→F501, F502→F503

Note 1: Each of the following numbers (25, 27, 29, 33, 153) are reverse signals.
Note 2: Pt and "V/F constant" cannot be switched while running. Stop the motor before switching.
It is necessary to wait to start the motor for 0.2 seconds or more after switching it.
uL and F170, uLu and F171, ub and F172 can be switched while running.
Note 3: If motor is switched, the setting to retain and subtract an integral value of motor electronic thermal is possible.
Refer to section 5.6 for details.

■ Example of setting a terminal for switching: Sink logic

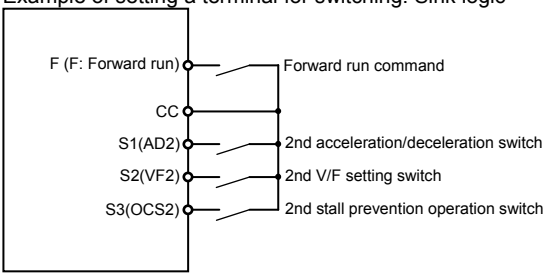

6.9 V/f 5-point setting

F190 : V/f5-point setting VF1 frequency
F191 : V/f 5-point setting VF1 voltage
F192 : V/f 5-point setting VF2 frequency
F193 : V/f 5-point setting VF2 voltage
F194 : V/f 5-point setting VF3 frequency
F195 : V/f 5-point setting VF3 voltage
F196 : V/f 5-point setting VF4 frequency
F197 : V/f 5-point setting VF4 voltage
F198 : V/f 5-point setting VF5 frequency
F199 : V/f 5-point setting VF5 voltage

⇒ For details, refer to 8) of section 6.3.

6.10 Frequency priority selection

6.10.1 Using two frequency commands according to the particular situation

FMOd: Frequency setting mode selection 1
F200: Frequency priority selection
F207: Frequency setting mode selection 2

⇒ For details, refer to section 5.8.

6.10.2 Setting frequency command characteristics

F107: Analog input terminal selection(VIB)
F109: Analog/logic input selection (VIA/VIB)
F201: VIA input point 1 setting
F202: VIA Input point 1 frequency
F203: VIA Input point 2 setting
F204: VIA Input point 2 frequency
F209: Analog input filter
F210: VIB input point 1 setting
F211: VIB input point 1 frequency
F212: VIB input point 2 setting
F213: VIB input point 2 frequency
F216: VIC input point 1 setting
F217: VIC input point 1 frequency
F218: VIC input point 2 setting
F219: VIC input point 2 frequency
F810: Communication command point selection
F811: Communication command point 1 setting
F812: Communication command point 1 frequency
F813: Communication command point 2 setting
F814: Communication command point 2 frequency

- Function
  Output frequency is adjusted in relation to frequency command according to external analog signals. VIA and VIB terminals are set to analog input.
  F209 analog input filter is effective for eliminating noise from frequency setting circuit. Increase the value if operation cannot be done because noise effects stability.

● To fine adjust the frequency command characteristics for analog input, use the parameters F470 to F475. (Refer to section 6.10.3)

[Parameter setting]

Title	Function	Adjustment range	Default setting
F107	Analog input terminal selection (VIB)	0: 0-+10V 1: -10-+10V	0
F109	Analog/logic input selection (VIA/VIB)	0: VIA - analog input VIB - analog input 1: VIA - analog input VIB - contact input 2: - 3: VIA - contact input (Sink) VIB - contact input 4: VIA - contact input (Source) VIB - contact input	0
F201	VIA input point 1 setting	0-100 (%)	0
F202	VIA input point 1 frequency	0.0-500.0 (Hz)	0.0
F203	VIA input point 2 setting	0-100 (%)	100
F204	VIA input point 2 frequency	0.0-500.0 (Hz)	*1
F209	Analog input filter	2-1000 (ms)	64
F210	VIB input point 1 setting	-100-+100 (%)	0
F211	VIB input point 1 frequency	0.0-500.0 (Hz)	0.0
F212	VIB input point 2 setting	-100-+100 (%)	100
F213	VIB input point 2 frequency	0.0-500.0 (Hz)	*1
F216	VIC input point 1 setting	0-100 (%)	0
F217	VIC input point 1 frequency	0.0-500.0 (Hz)	0
F218	VIC input point 2 setting	0-100 (%)	100
F219	VIC input point 2 frequency	0.0-500.0 (Hz)	*1
F810	Communication command point selection	0: Disabled 1: Enabled	0
F811	Communication command point 1 setting	0-100 (%)	0
F812	Communication command point 1 frequency	0.0-FH (Hz)	0
F813	Communication command point 2 setting	0-100 (%)	100
F814	Communication command point 2 frequency	0.0-FH (Hz)	*1

*1: Default setting values vary depending on the setup menu. Refer to section 11.5.

Note 1: Do not set point 1 and 2 to the same value. If they are set to the same value, Err 1 is displayed.

For details about analog signal setting, refer to section 7.3.

1) 0-10Vdc voltage input adjustment (VIA, VIB terminals)

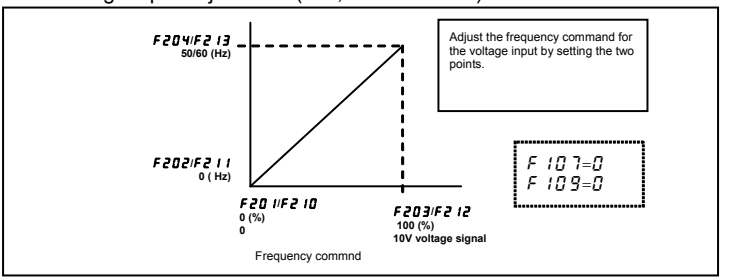

2) 4-20mAdc current input adjustment (VIC terminal)

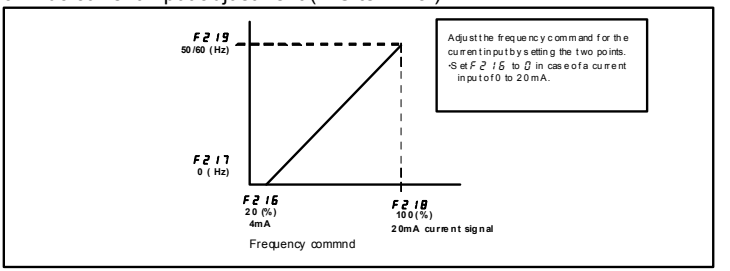

3) -10-+10 Vdc voltage input adjustment (VIB terminal)

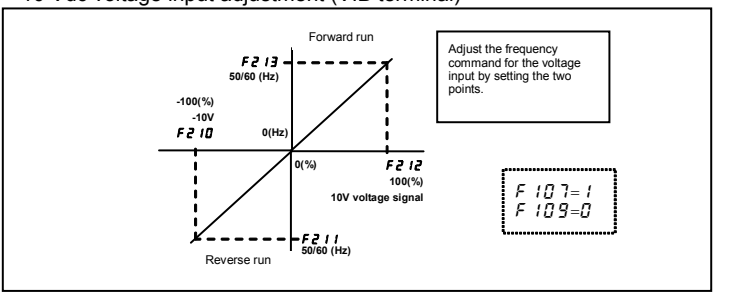

6.10.3 Fine adjustment of analog frequency command

F470: VIA input bias
F471: VIA input gain
F472: VIB input bias
F473: VIB input gain
F474: VIC input bias
F475: VIC input gain

- Function
  These parameters are used to fine adjust the relation between the frequency command input through the analog input terminal VIA, VIB, VIC and the output frequency.
  Use these parameters to make fine adjustments after making rough adjustments using the parameters F201 to F204, F210 to F213, F216 to F219

The figure below shows the characteristic of the frequency command input through the VI terminal and that of the output frequency.

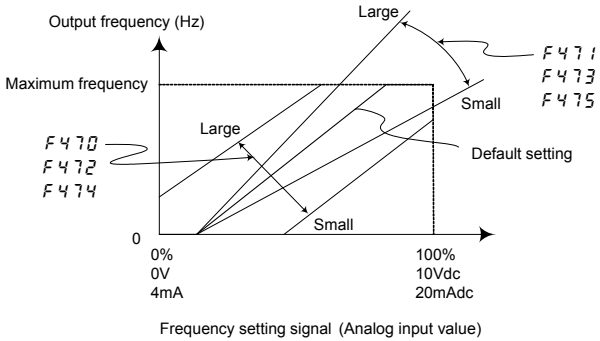

* Bias adjustment of analog input terminal (F470, F472, F474)
Decrease the value in case frequency is output even though the frequency command is 0 (zero) Hz.

* Gain adjustment of analog input terminal (F471, F473, F475)
Increase the value in case the output frequency doesn't reach the maximum frequency even though the maximum voltage and current are applied.

6.10.4 Setting of frequency with the input from an external logic

F264: External logic input - UP response time

F265: External logic input - UP frequency steps

F266: External logic input - DOWN response time

F267: External logic input - DOWN frequency steps

F268: Initial value of UP/DOWN frequency

F269: Change of the initial value of UP/DOWN frequency

- Function
  These parameters are used to set an output frequency by means of a signal from an external device.

[Parameter setting]

Title	Function	Adjustment range	Default setting
F264	External logic input - UP response time	0.0 - 10.0 (s)	0.1
F265	External logic input - UP frequency steps	0.0 - FH (Hz)	0.1
F266	External logic input - DOWN response time	0.0 - 10.0 (s)	0.1
F267	External logic input - DOWN frequency steps	0.0 - FH (Hz)	0.1
F268	Initial value of UP/DOWN frequency	LL - UL (Hz)	0.0
F269	Change of the initial value of UP/DOWN frequency	0: Not changed 1: Setting of F268 changed when power is turned off	1

- This function is valid when the parameter FMOd (Frequency setting mode selection 1) = 5 is set.

■ Input terminal settings

Assigning the following functions to the input terminal will allow you to change (up/down) or clear the output frequency by using the terminal's ON/OFF.

Input terminal function		ON	OFF
88	Frequency UP	Frequency setting increase	Clear
90	Frequency DOWN	Frequency setting decrease	Clear
92	Clear frequency UP/DOWN	OFF → ON: External logic up/down frequency clear settings	F268 settings

Each of the following numbers (89, 91, 93) are reverse signals.

■ Adjustment with continuous signals (Operation example 1)

Set parameters as follows to adjust the output frequency up or down in proportion to the frequency adjustment signal input time:

External logic input up/down frequency incremental gradient = F265/F264 setting time

External logic input up/down frequency decremental gradient = F267/F266 setting time

Set parameters as follows to adjust the output frequency up or down almost synchronously with the adjustment by the external logic input up/down frequency command:

F264 = F266 = 0.1

(FH/ACC) ≥ (F265/F264 setting time)

(FH/dEC) ≥ (F267/F266 setting time)

<<Sample sequence diagram 1: Adjustment with continuous signals>>

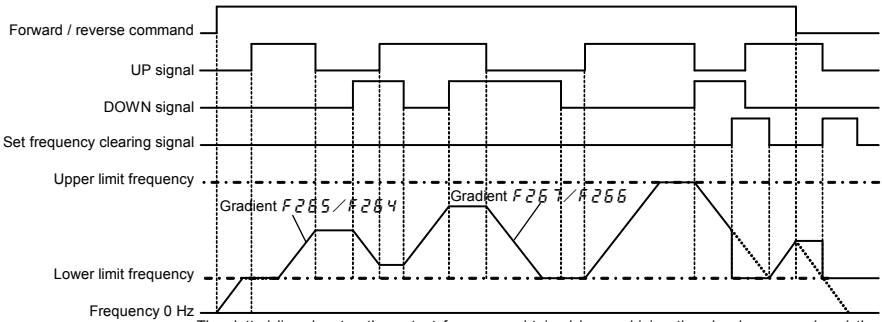

The dotted line denotes the output frequency obtained by combining the slowdown speed and the panel frequency adjustment speed.

■ Adjustment with pulse signals (Operation example 2)

Set parameters as follows to stepwise adjust the frequency by one pulse:

F264, F266 ≤ Pulse On time

F265, F267 = Frequency obtained with each pulse

* The inverter does not respond to any pulses with an ON time shorter than that set with F264 or F266. 12ms or more of clearing signal is allowed.

<<Sample sequence diagram 2: Adjustment with pulse signals>>

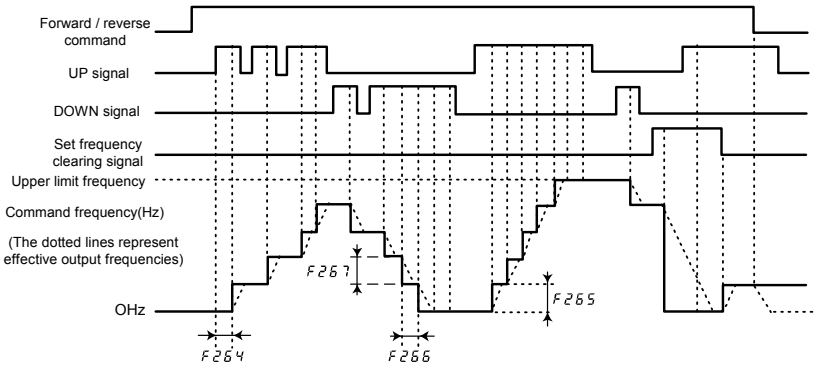

■ If two signals are impressed simultaneously

- If a clear single and an up or down signal are impressed simultaneously, priority will be given to the clear signal.
- If up and down signals are impressed simultaneously, the frequency will change at the specified up or down rate.

■ The setting of the initial up/down frequency

To adjust the frequency starting at a specified frequency other than 0.0 Hz (default initial frequency) after turning on the inverter, specify the desired frequency by setting the parameter F268 (initial up/down frequency). Also, set F269 (change of initial up/down frequency) to 0 (Not changed).

■ The change of the initial up/down frequency

To make the inverter automatically save the frequency immediately before the power is off and start operation at that frequency next time power is on, set F269 (change of initial up/down frequency) to 1 (which changes the setting of F268 when power is turned off).
Keep in mind that the setting of F268 is changed each time power is turned off.

■ Frequency adjustment range

The frequency can be set from LL (lower limit frequency) to FH (Maximum frequency). The lower-limit frequency will be set as soon as the set frequency clearing function (function number 92, 93) is entered from the input terminal.

■ Minimum unit of frequency adjustment

If F702 (Frequency free unit magnification) is set to 1.00, the output frequency can be adjusted in steps of 0.01Hz.

6.10.5 Setting of frequency with the pulse train input

F146: Logic input / pulse train input selection (S2)

F378: Number of pulse train input

F679: Pulse train input filter

- Function
  These parameters are used to set output frequency by means of pulse train input signal of S2 terminal.

[Parameter setting]

Title	Function	Adjustment range	Default setting
F146	Logic input / pulse train input selection (S2)	0: Logic input 1: Pulse train input	0
F378	Number of pulse train input	10-500 (pps)	25
F679	Pulse train input filter	2-1000 (ms)	2

6

- This function is valid when the parameter FMOd = 11 (Pulse train input) and F146 = 1 (Pulse train input) are set.
- Number of pulses per 1Hz of output frequency is set by parameter F378.
- Example of setting

F378 = 25 (pps) :	Input signal = 25 (pps)	⇒ Output frequency = 1.0 (Hz)
	Input signal = 100 (pps)	⇒ Output frequency = 4.0 (Hz)
	Input signal = 2k (pps)	⇒ Output frequency = 80.0 (Hz)
F378 = 50 (pps) :	Input signal = 50 (pps)	⇒ Output frequency = 1.0 (Hz)
	Input signal = 100 (pps)	⇒ Output frequency = 2.0 (Hz)
	Input signal = 2k (pps)	⇒ Output frequency = 40.0 (Hz)

Note 1) Minimum number of pulses to inputting S2 terminal is 10 pps, and Maximum is 2 kpps.
Duty is 50± 10%.

Note 2) The maximum frequency output by this function is 200Hz.

6.11 Operation frequency

6.11.1 Starting frequency/ Stop frequency

F240: Starting frequency

F243: Stop frequency setting

- Function
  The frequency set with F240 is put out instantly when operation is started.
  Use the F240 parameter when a delay in response of starting torque due to the acceleration/deceleration time may affect the operation. Setting the starting frequency to a value from 0.5 to 3.0Hz is recommended. The occurrence of an overcurrent can be avoided by setting this frequency below the rated slippage of the motor.
  When starting: Frequency set with F240 is output instantly.
  When stopping: Output frequency turns to be 0Hz instantly with the frequency set with F243.

[Parameter setting]

Title	Function	Adjustment range	Default setting
F240	Starting frequency	0.1-10.0 (Hz)	0.5
F243	Stop frequency setting	0.0: Same as F240 0.1-30.0 (Hz)	0.0

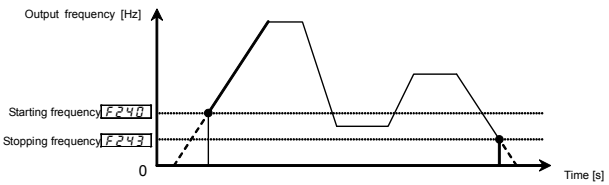

Note: Set these parameters so that the starting frequency F240 is higher than the stopping frequency F243. If the F240–set frequency is lower than the F243–set frequency, the inverter doesn't start when the frequency command is F243–set frequency or less.

6.11.2 Run/stop control with frequency command

F241: Operation starting frequency

F242: Operation starting frequency hysteresis

- Function
  The Run/stop of operation can be controlled simply with frequency command.

[Parameter setting]

Title	Function	Adjustment range	Default setting
F241	Operation starting frequency	0.0-FH (Hz)	0.0
F242	Operation starting frequency hysteresis	0.0-FH (Hz)	0.0

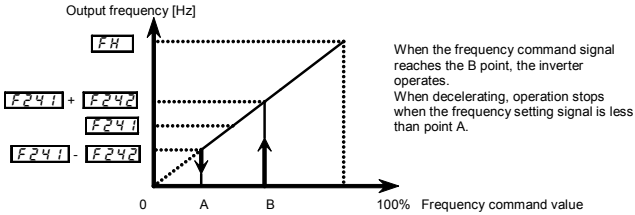

6

6.12 DC braking

6.12.1 DC braking

F249: PWM carrier frequency during DC braking

F250: DC braking starting frequency

F251: DC braking current

F252: DC braking time

- Function
  A large braking torque can be obtained by applying a direct current to the motor. These parameters set the direct current to be applied to the motor, the application time and the starting frequency.

[Parameter setting]

Title	Function	Adjustment range	Default setting
F249	PWM carrier frequency during DC braking	2.0-16.0 (kHz)	4.0
F250	DC braking starting frequency	0.0-FH (Hz)	0.0
F251	DC braking current	0.0-100 (%) / (A)	50
F252	DC braking time	0.0- 25.5 (s)	1.0

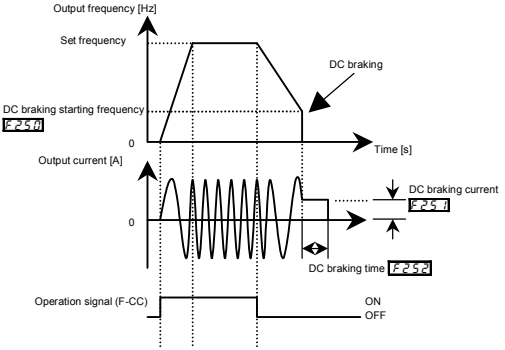

Note1: During DC braking, the overload protection sensitivity of the inverter increases. The DC braking current may be adjusted automatically to prevent tripping.

Note 2: During DC braking, the carrier frequency becomes the setting of whichever is lower parameter F249 or F300.

Note 3: DC breaking can be done by using the signal at an input terminal. Input terminal 22: Assign DC braking command (23 is reverse). DC braking is applied while the terminal is ON regardless of the F250, F252 settings. Even if the terminal is OFF, DC braking is applied only for the F252 time. The amount of DC braking depends on the F251 settings.

6.12.2 Motor shaft fixing control

F254: Motor shaft fixing control

- Function
  This function is used to preheat the motor or to prevent the motor from running unexpectedly when its shaft is not restrained.

[Parameter setting]

Title	Function	Adjustment range	Default setting
F254	Motor shaft fixing control	0: Disabled, 1: Enabled	0

If the motor shaft fixing control F254 is set to 1, half amount of the braking force set with F251 (DC braking rate) will make the motor continue DC braking even after the completion of ordinary DC braking. To stop motor shaft fixing control, turn off the standby command (ST signal).

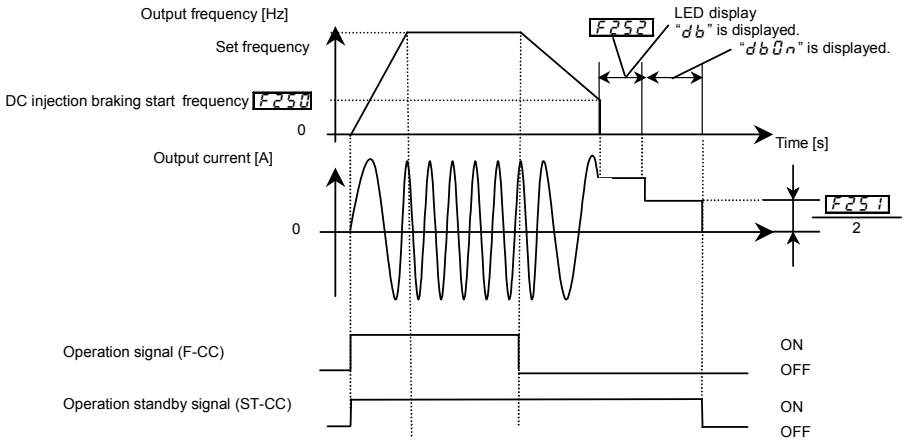

As the default setting for ST (Standby) is Always ON, change the following settings:

・F110=0 (no function)

・Assign 6: ST (Standby) to an open input terminal.

Note1: Nearly the same motor shaft fixing control can be exercised when entering a DC braking command with the signal at an input terminal.

Note2: If a power failure occurs during motor shaft fixing control and the motor starts to coast, motor shaft fixing control will be canceled.
Also, if the inverter trips during motor shaft fixing control and is restored to working order by the retry

function, motor shaft fixing control will be canceled.

Note 3: During shaft fixing control, the carrier frequency becomes the setting of whichever is lower parameter, F249 or F300.

6.13 Stop at lower-limit frequency operation (sleep function)

F256: Time limit for lower-limit frequency operation

F259: Lower limit frequency reach time limit at start-up

F391: Hysteresis for lower-limit frequency operation

- Function
  If operation at the lower-limit frequency (LL) is carried out for the time set with F256, the inverter will automatically decelerate the motor to stop for the purpose of energy-saving. At that time, "LStP" is displayed (alternately) on the operation panel.
  Stop by this function will be canceled if a frequency command value exceeds the lower-limit frequency (LL) +F391 (Hz), or if the operation command is OFF. This function will not work until the output frequency reaches LL at the start of operation.
  If the output frequency doesn't reach LL at the start of operation for malfunction of load, the inverter will automatically stop after the time set with F259 elapses.

6

[Parameter setting]

Title	Function	Adjustment range	Default setting
F256	Time limit for lower-limit frequency operation	0.0: Disabled 0.1 - 600.0 (s)	0.0
F259	Lower limit frequency reach time limit at start-up	0.0: Disabled 0.1 - 600.0 (s)	0.0
F391	Hysteresis for lower-limit frequency operation	0.0-UL (Hz)	0.2

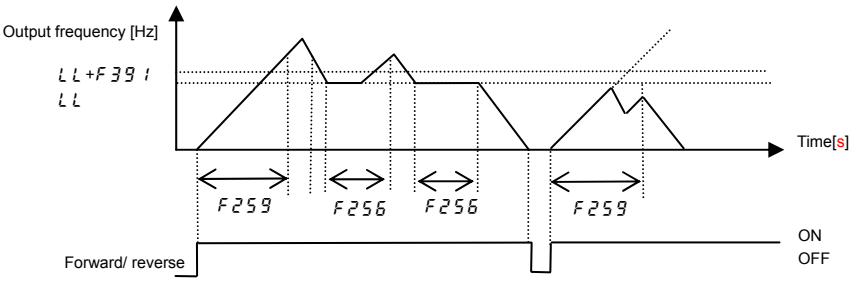

Note: This function is valid when doing forward/reverse switching.
When starting operation, F256 function will not work until output frequency reaches LL.
When the output frequency exceeds LL, F259 function will be invalid until operation signal is OFF.

6.14 Jog run mode

F260: Jog run frequency

F261: Jog run stopping pattern

F262: Panel jog run mode

- Function
  Use the jog run parameters to operate the motor in jog mode. Input of a jog run signal immediately generates a jog run frequency output irrespective of the designated acceleration time.
  Also, you can choose the jog run start/stop mode from the panel.

Assign 18: jog run mode to an input terminal.

Ex) When assigning it to the RES terminal: F113 to 18.

The motor can be operated in jog mode while the assigned input terminals are connected (RES-CC ON).

[Parameter setting]

Title	Function	Adjustment range	Default setting
F260	Jog run frequency	F240-20.0 (Hz)	5.0
F261	Jog run stopping pattern	0: Deceleration stop 1: Coast stop 2: DC braking	0
F262	Panel jug run mode	0: Invalid 1: Valid	0

[Setting of jog run mode (RES-CC)]

Ex) Assign jog run mode to control terminal RES.

Title	Function	Adjustment range	Setting
F113	Input terminal selection (RES)	0-203	18 (Jog run mode)

Note 1: During the jog run mode, low speed detection signal (LOW) is output but designated frequency reach signal (RCH) is not output, and PID control does not work.

Note 2: When only the operation panel is used for operation in jog run mode, the jog run function does not need to be assigned to any input terminal.

<Examples of jog run>

RES (JOG): ON + F:ON: Forward jog run

RES(JOG): ON + R: ON: Reverse jog run

(Frequency command + F: ON: Forward run , Frequency command + R: ON: Reverse run)

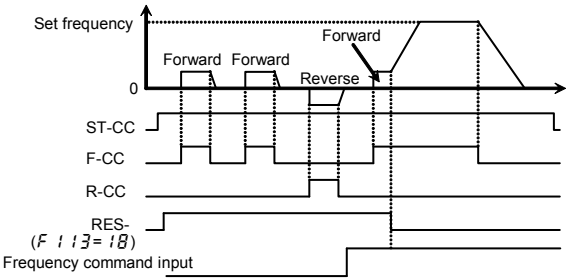

- The jog run setting terminal (RES-CC) is enabled when the value of operation frequency is that of the jog run frequency and below.
  This connection does not function when operation frequency exceeds the jog run frequency.
- The motor can be operated in jog mode while the jog run setting terminals are connected (RES-CC).
- Jog run has priority to new operation command given during operation.
- Even for F261 = 0 or 1, an emergency DC braking (F603 = 2) is prior to the setting.
- No limits are imposed to the jog run frequency by the upper-limit frequency (parameter UL).

■ Panel jog mode (if F262 is set to 1)

- The direction of rotation can change by using extension panel.
  Using RKP007Z : Display switches to FJOG and rJOG by every pressing the FWD/REV key.
  Using RKP002Z : Pressing the UP key changes display to FJOG and pressing the DOWN key changes display to rJOG.
- When FJOG is displayed, the inverter will be placed in forward jog run mode as long as the key is pressed.
- When rJOG is displayed, the inverter will be placed in reverse jog run mode as long as the RUN key is pressed.
- If you press and hold down the RUN key for 20 seconds or more, the key failure alarm "E-17" will be displayed.

Here is the sequence in which modes change each time you press the MODE key.

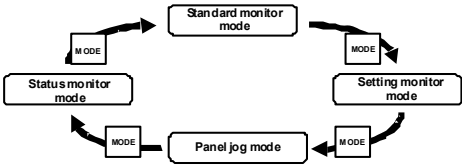

Note: When the inverter is in operation (RUN lamp is blinking) or when an operation command is issued (RUN lamp is lighting), the inverter cannot be switched to panel jog mode.

6.15 Jump frequency - avoiding resonant frequencies

F270: Jump frequency 1

F271: Jumping width 1

F272: Jump frequency 2

F273: Jumping width 2

F274: Jump frequency 3

F275: Jumping width 3

- Function
  Resonance due to the natural frequency of the mechanical system can be avoided by jumping the resonant frequency during operation. During jumping, hysteresis characteristics with respect to the jump frequency are given to the motor.

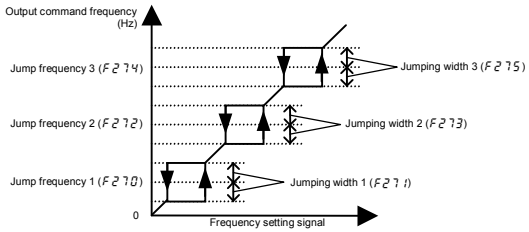

[Parameter setting]

Title	Function	Adjustment range	Default setting
F270	Jump frequency 1	0.0-FH (Hz)	0.0
F271	Jumping width 1	0.0-30.0 (Hz)	0.0
F272	Jump frequency 2	0.0-FH (Hz)	0.0
F273	Jumping width 2	0.0-30.0 (Hz)	0.0
F274	Jump frequency 3	0.0-FH (Hz)	0.0
F275	Jumping width 3	0.0-30.0 (Hz)	0.0

Note 1: Do not set the jump parameters, if multiple jump frequency setting width overlap.

Note 2: During acceleration or deceleration, the jumping function doesn't work for the operation frequency.

6.16 Bumpless operation

F295: Bumpless operation selection

F732: Local/remote key prohibition of extension panel

F750: Easy key function selection

- Function
  When switching from Remote mode to Local mode, the status of start and stop, and operating frequency at Remote mode are moved to Local mode.
  Running status of Local mode will not moved to Remote mode when switching from Local mode to Remote mode.

[Parameter setting]

Title	Function	Adjustment range	Default setting
F295	Bumpless operation selection	0: Disabled 1: Enabled	0
F732	Local/remote key prohibition of extension panel	0: Permitted 1: Prohibited	1
F750	EASY key function selection	0: Easy / standard setting mode switching function 1: Shortcut key 2: Local / remote key 3: Monitor peak / minimum hold trigger 4: - 5: -	0

- Set Local/remote function to EASY key.
  F750 (EASY key function selection) = 2 (Local / remote key).
  EASY lamp is lighting during local mode.
- Local mode is the operation using operation panel.
  Remote mode is the operation method selected by the command mode selection: CMOd and Frequency setting mode selection: FMOd
- LOC/REM key of extension panel option (RKP007Z) is available.
  In this case, set parameter F732 (Local/remote key prohibition of extension panel) = 0 (Permitted).

Operation example : Remote mode (CMOd=0: (Terminal block))

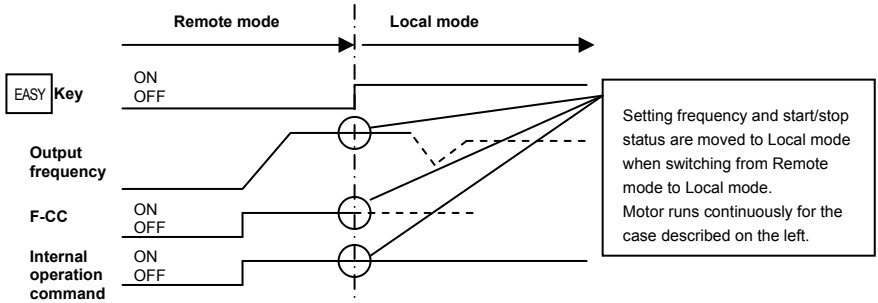

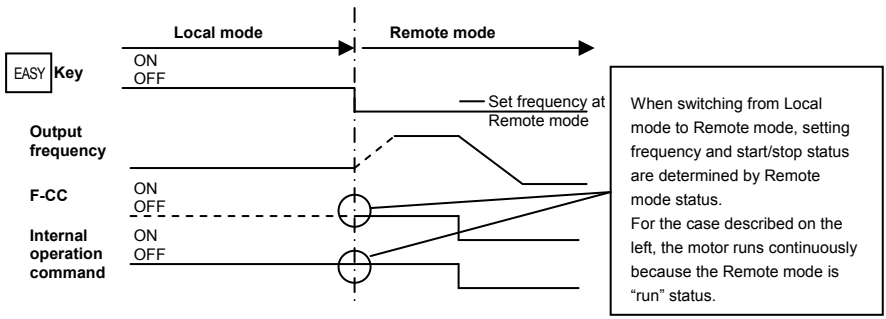

● To prevent from moving the setting frequency and start/stop status of Remote mode to Local mode, set F295 to "0"(Disabled). In this case, EASY key is effective only while stopping.

6.17 Low voltage operation

F297: Low voltage operation upper limit frequency

F298: Low voltage operation DC voltage

⇒ Refer to "Low voltage operation instruction manual: E6581918" for details.

6.18 PWM carrier frequency

AUL: Overload characteristic selection

F300: PWM carrier frequency

F312: Random mode

F316: PWM carrier frequency control mode selection

- Function
  1) With the F300 parameter, the tone of the magnetic noise from the motor can be changed by switching the PWM carrier frequency. This parameter is also effective in preventing the motor from resonating with its load machine or its fan cover.
  2) In addition, the F300 parameter reduces the electromagnetic noise generated by the inverter. Reduce the carrier frequency to reduce electromagnetic noise. Note: The electromagnetic noise level is reduced but the acoustic noise of the motor is increased.
  3) The random mode improves hearing impression by changing the pattern of the low carrier frequency.
  4) To set the parameter F316 to 2 or 3 has the effect of suppressing voltage serge to the motor. Reduce the carrier frequency to 4kHz or less if the wiring between the inverter and motor is long (20 to 100m as a guide).

[Parameter setting]

Title	Function	Adjustment range	Default setting
AUL	Overload characteristic selection	0: - 1: Constant torque characteristic（150%-60s） 2: Variable torque characteristic（120%-60s）	0
F300	PWM carrier frequency	2.0-16.0 (kHz)	12.0
F312	Random mode	0: Disabled 1: Random mode 1 2: Random mode 2 3: Random mode 3	0
F316	PWM carrier frequency control mode selection	0: Carrier frequency without reduction 1: Carrier frequency with automatic reduction 2: Carrier frequency without reduction (Support for 500V models) 3: Carrier frequency with automatic reduction (Support for 500V models)	1

Note 1: Some models need reduced current ratings, depending on F300 settings and ambient temperature. Refer to the table on the following pages.

Note 2: Random mode is exercised when the motor is operated in a low-frequency range where it produces annoying acoustic noise.
As the three kinds of timbre mode (F312= 1, 2, 3) are prepared, the proper mode can be selected to fit the load condition.
If F300 is set to 8.0 kHz or more, the random mode function will not be performed, because the level of motor magnetic noise is low at high carrier frequencies.

Note 3: When the PWM carrier frequency is high, selecting “Carrier frequency without reduction” causes the inverter to be tripped more easily than selecting “Carrier frequency with automatic reduction.”

Note 4: If the motor becomes overloaded when F316 is set to 0 or 2 (carrier frequency not decreased automatically), an overload trip occurs.

Note 5: For the setting F316=2 or 3 to take effect, power needs to be turned off and then turned back on.

Note 6: When setting F316 to 2 or 3, be sure to set F300 at 4.0kHz or less.

■ De-rating of rated current

[240V class]

In case of AUL = 1 (Constant torque characteristic (150%-60s)) setting.

VFS15- VFS15S-	Ambient temperature	PWM carrier frequency		
		2.0k~4.0kHz	4.1k~12.0kHz	12.1k~16.0kHz
2002PL-W	40°C or less	1.5 A	1.5 A	1.5 A
	Above 40 to 50°C	1.5 A	1.2 A	1.2 A
	Above 50 to 60°C	1.2 A	1.1 A	1.1 A
2004 PM/L-W	40°C or less	3.3 A	3.3 A	3.3 A
	Above 40 to 50°C	3.3 A	2.6 A	2.6 A
	Above 50 to 60°C	2.6 A	2.5 A	2.5 A
2007 PM/L-W	40°C or less	4.8 A	4.4 A	4.2 A
	Above 40 to 50°C	4.8 A	3.5 A	3.4 A
	Above 50 to 60°C	3.8 A	3.3 A	3.2 A
2015 PM/L-W	40°C or less	8.0 A	7.9 A	7.1 A
	Above 40 to 50°C	8.0 A	7.9 A	7.1 A
	Above 50 to 60°C	7.6 A	6.3 A	5.7 A
2022 PM/L-W	40°C or less	11.0 A	10.0 A	9.1 A
	Above 40 to 50°C	11.0 A	10.0 A	9.1 A
	Above 50 to 60°C	10.5 A	8.0 A	7.3 A
2037PM-W	40°C or less	17.5 A	16.4 A	14.6 A
	Above 40 to 50°C	17.5 A	16.4 A	14.6 A
	Above 50 to 60°C	16.6 A	13.1 A	11.7 A
2055PM-W	40°C or less	27.5 A	25.0 A	25.0 A
	Above 40 to 50°C	27.5 A	25.0 A	25.0 A
	Above 50 to 60°C	26.1 A	20.0 A	20.0 A
2075PM-W	40°C or less	33.0 A	33.0 A	29.8 A
	Above 40 to 50°C	33.0 A	33.0 A	29.8 A
	Above 50 to 60°C	31.4 A	26.4 A	23.8 A

VFS15-	Ambient temperature	PWM carrier frequency		
		2.0k~4.0kHz	4.1k~12.0kHz	12.1k~16.0kHz
2110PM-W	40°C or less	54.0 A	49.0 A	49.0 A
	Above 40 to 50°C	54.0 A	49.0 A	49.0 A
	Above 50 to 60°C	51.3 A	39.2 A	39.2 A
2150PM-W	40°C or less	66.0 A	60.0 A	54.0 A
	Above 40 to 50°C	66.0 A	60.0 A	54.0 A
	Above 50 to 60°C	62.7 A	48.0 A	43.2 A

In case of AUL =2 (Variable torque characteristic (120%-60s)) setting.

VFS15-	Ambient temperature	PWM carrier frequency
		2.0k~4.0kHz
2004 PM-W	40°C or less	3.5 A
2007 PM-W	40°C or less	6.0 A
2015 PM-W	40°C or less	9.6 A
2022 PM-W	40°C or less	12.0 A
2037PM-W	40°C or less	19.6 A
2055PM-W	40°C or less	30.0 A
2075PM-W	40°C or less	38.6 A
2110PM-W	40°C or less	56.0 A
2150PM-W	40°C or less	69.0 A

VFS15S-	Ambient temperature	PWM carrier frequency
		2.0k~4.0kHz
2002 PL-W	40°C or less	1.9 A
2004 PL-W	40°C or less	4.1 A
2007 PL-W	40°C or less	5.5 A
2015 PL-W	40°C or less	10.0 A
2022 PL-W	40°C or less	12.0 A

[500V class]

In case of AUL = 1 (constant torque characteristic (150%-60s) setting)

(480V or less)

VFS15-	Ambient temperature	PWM carrier frequency		
		2.0k~4.0kHz	4.1k~12.0kHz	12.1k~16.0kHz
4004 PL-W	40°C or less	1.5 A	1.5 A	1.5 A
	Above 40 to 50°C	1.5 A	1.5 A	1.5 A
	Above 50 to 60°C	1.4 A	1.2 A	1.2 A
4007 PL-W	40°C or less	2.3 A	2.1 A	2.1 A
	Above 40 to 50°C	2.3 A	2.1 A	2.1 A
	Above 50 to 60°C	2.2 A	1.7 A	1.7 A
4015 PL-W	40°C or less	4.1 A	3.7 A	3.3 A
	Above 40 to 50°C	4.1 A	3.7 A	3.3 A
	Above 50 to 60°C	3.9 A	3.0 A	2.6 A
4022 PL-W	40°C or less	5.5 A	5.0 A	4.5 A
	Above 40 to 50°C	5.5 A	5.0 A	4.5 A
	Above 50 to 60°C	5.2 A	4.0 A	3.6 A
4037 PL-W	40°C or less	9.5 A	8.6 A	7.5 A
	Above 40 to 50°C	9.5 A	8.6 A	7.5 A
	Above 50 to 60°C	9.0 A	6.9 A	6.0 A
4055 PL-W	40°C or less	14.3 A	13.0 A	13.0 A
	Above 40 to 50°C	14.3 A	13.0 A	13.0 A
	Above 50 to 60°C	13.6 A	10.4 A	10.4 A
4075 PL-W	40°C or less	17.0 A	17.0 A	14.8 A
	Above 40 to 50°C	17.0 A	17.0 A	14.8 A
	Above 50 to 60°C	16.2 A	13.6 A	11.8 A
4110 PL-W	40°C or less	27.7 A	25.0 A	25.0 A
	Above 40 to 50°C	27.7 A	25.0 A	25.0 A
	Above 50 to 60°C	26.3 A	20.0 A	20.0 A
4150 PL-W	40°C or less	33.0 A	30.0 A	26.0 A
	Above 40 to 50°C	33.0 A	30.0 A	26.0 A
	Above 50 to 60°C	31.4 A	24.0 A	20.8 A

(over 480V)

VFS15-	Ambient temperature	PWM carrier frequency		
		2.0k~4.0kHz	4.1k~12.0kHz	12.1k~16.0kHz
4004 PL-W	40°C or less	1.5 A	1.5 A	1.2 A
	Above 40 to 50°C	1.5 A	1.5 A	1.2 A
	Above 50 to 60°C	1.4 A	1.2 A	1.0 A
4007 PL-W	40°C or less	2.1 A	1.9 A	1.9 A
	Above 40 to 50°C	2.1 A	1.9 A	1.9 A
	Above 50 to 60°C	2.0 A	1.5 A	1.5 A
4015 PL-W	40°C or less	3.8 A	3.4 A	3.1 A
	Above 40 to 50°C	3.8 A	3.4 A	3.1 A
	Above 50 to 60°C	3.6 A	2.7 A	2.5 A
4022 PL-W	40°C or less	5.1 A	4.6 A	4.2 A
	Above 40 to 50°C	5.1 A	4.6 A	4.2 A
	Above 50 to 60°C	4.8 A	3.7 A	3.4 A
4037 PL-W	40°C or less	8.7 A	7.9 A	6.9 A
	Above 40 to 50°C	8.7 A	7.9 A	6.9 A
	Above 50 to 60°C	8.3 A	6.3 A	5.5 A
4055 PL-W	40°C or less	13.2 A	12.0 A	12.0 A
	Above 40 to 50°C	13.2 A	12.0 A	12.0 A
	Above 50 to 60°C	12.5 A	9.6 A	9.6 A
4075 PL-W	40°C or less	15.6 A	14.2 A	12.4 A
	Above 40 to 50°C	15.6 A	14.2 A	12.4 A
	Above 50 to 60°C	14.8 A	11.4 A	9.9 A
4110 PL-W	40°C or less	25.5 A	23.0 A	23.0 A
	Above 40 to 50°C	25.5 A	23.0 A	23.0 A
	Above 50 to 60°C	24.2 A	18.4 A	18.4 A
4150 PL-W	40°C or less	30.4 A	27.6 A	24.0 A
	Above 40 to 50°C	30.4 A	27.6 A	24.0 A
	Above 50 to 60°C	28.9 A	22.1 A	19.2 A

In case of AUL =2 (Variable torque characteristic (120%-60s)) setting.

VFS15-	Ambient temperature	PWM carrier frequency 2.0k~4.0kHz
4004 PL-W	40°C or less	2.1 A
4007 PL-W	40°C or less	3.0 A
4015 PL-W	40°C or less	5.4A
4022 PL-W	40°C or less	6.9 A
4037 PL-W	40°C or less	11.1 A
4055 PL-W	40°C or less	17.0A
4075 PL-W	40°C or less	23.0 A
4110 PL-W	40°C or less	31.0A
4150 PL-W	40°C or less	38.0A

* In case of AUL =2 setting, be sure to install the input AC reactor (ACL) between power supply and inverter and use at ambient temperature 40°C or less. Set F300 to 4.0 kHz or less.
* If parameter F316=0 or 2 and current is increased to main module overheat level (OL3) or to overheat level (OH), the L alarm or H alarm occurs. If the cumulative amount of overload is increased further, OL3 trip or OH trip occurs.
  In this case, to avoid such trips, reduce the stall prevention level (F601) properly.
* If parameter F316= 2 or 3, setting parameter F300 to 4.0kHz or less is recommended. Output voltage may be reduced.
* PWM carrier frequency is increased at high output frequency area for stable operation, even if F300 is set to low PWM carrier frequency.
* In case of three phase 500V-4.0kW model with AUL = 2 setting, be sure to press the grounding capacitor switch and connect the grounding capacitor to the ground.

6.19 Trip-less intensification

6.19.1 Auto-restart (Restart of coasting motor)

F301: Auto-restart control selection
⇒ Refer to section 5.9 for details.

6.19.2 Regenerative power ride-through control/Deceleration stop during power failure/Synchronized acceleration/deceleration

F302 : Regenerative power ride-through control (Deceleration stop)

F317 : Synchronized deceleration time

F318 : Synchronized acceleration time

6

• **Function**

1) Regenerative power ride-through control: When momentary power failure occurs during operation, this function makes operation continue using the regeneration energy from a motor.

2) Deceleration stop during power failure: When momentary power failure occurs during operation, this function stops the motor quickly and compulsorily using the regeneration energy from the motor.
(Deceleration time varies according to control.) When operation is stopped, the message "StOP" blinks on the operation panel. After the forced stop, the inverter remains static until you put off the operation command momentarily.

3) Synchronized acceleration/deceleration: When the inverter is used with textile machines, this function decelerate the motors synchronously to stop in the event of a momentary power failure and accelerate them to reach the targeted frequency commands synchronously at the recovery from the power failure in order to prevent thread breakage.

[Parameter setting]

Title	Function	Adjustment range	Default setting
F302	Regenerative power ride-through control (Deceleration stop)	0: Disabled 1: Regenerative power ride-through control 2: Deceleration stop during power failure 3: Synchronized acceleration / deceleration (signal) 4: Synchronized acceleration / deceleration (signal + power failure)	0
F317	Synchronized deceleration time (time elapsed between start of deceleration to stop)	0.0-3600 (360.0) (s)	2.0
F318	Synchronized acceleration time (time elapsed between start of acceleration to achievement of specified speed)	0.0-3600 (360.0) (s)	2.0

Note 1: The deceleration time and the acceleration time when F302=3 or 4 depend on the setting of F317 and that of F318, respectively.

Note 2: Even if these functions are used, a motor may coast according to load conditions.
In this case, use the auto-restart function (F301) for the smooth restart after power supply is restored .

Note 3: Jog run function doesn't operate at synchronized acceleration/deceleration.

■ An example of setting when F302= 1
[When power is interrupted]

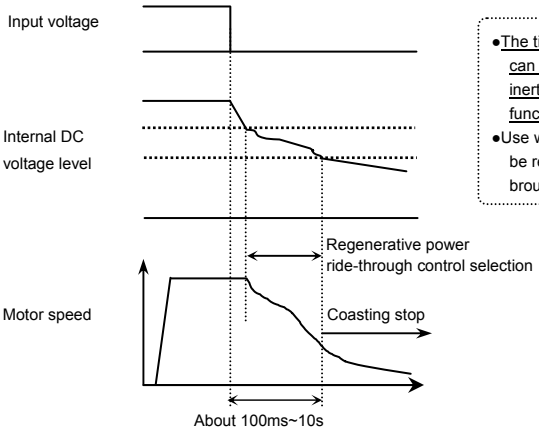

- The time for which the operation of the motor can be continued depends on the machine inertia and load conditions. Before using this function, therefore, perform verification tests.
- Use with the retry function allows the motor to be restarted automatically without being brought to an abnormal stop.

Note 4: If power is interrupted during deceleration stop, power ride-through control will not be performed.

[If momentary power failure occurs]

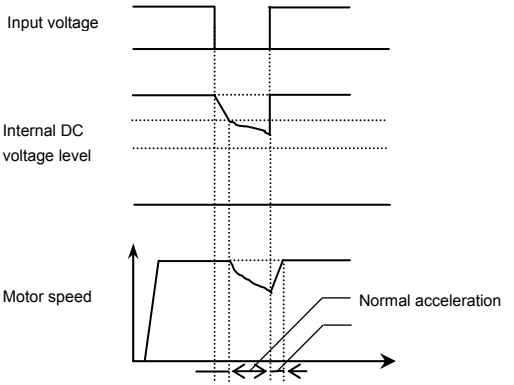

Note 5: If momentary power failure occurs during deceleration stop, power ride-through control will not be performed.

■ An example of setting when F302=2

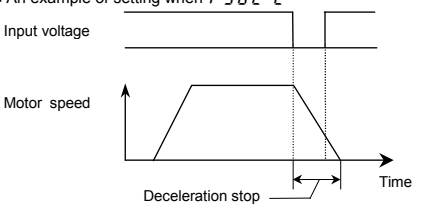

- Even after the recovery from an input power failure, the motor continues deceleration stop. If the voltage in the inverter main circuit falls below a certain level, however, control will be stopped and the motor will coast.
- If the voltage in main circuit falls below main circuit undervoltage (nOFF) level at Non-stop control during power failure, the motor will coast and inverter displays StOP and 0.0 alternately. The motor continues coasting even after power supply is restored.

■ An example of setting when F302=3 (when the function of receiving power failure synchronized signal is assigned to the input terminal S1)
F114 (Input terminal function selection 4A (S1)) =62 (Power failure synchronized signal)

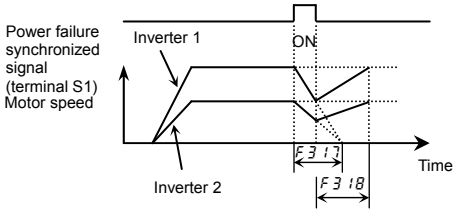

• If the parameters F317, F318 are set for same acceleration and deceleration time and if power failure synchronized signal of the input terminal functions (62, 63) are used, multiple motors can be stopped at about the same time or make them reach to each frequency command.
• If a power failure synchronized signal is ON, the synchronized deceleration function decreases the output frequency to 0Hz to decelerate the motor linearly within the time specified with F317. (The S-pattern operation function or the braking sequence cannot be used along with this function.)
When the motor comes to a full stop, the message "StOP" appears.
• If the power failure synchronized signal is canceled during synchronized deceleration, the synchronized acceleration function increases the output frequency to the frequency at the start of synchronized deceleration or to the command frequency, whichever is lower, to accelerate the motor linearly within the time specified with F318. (The S-pattern operation function, the braking sequence or the auto-tuning function cannot be used along with this function.)
When acceleration is started, the message "StOP" disappears.
• If a forward/reverse switching command or a stop command is issued during synchronized acceleration or deceleration, synchronized acceleration or deceleration will be canceled.
• When the motor is started again after the synchronized deceleration function stop, turn off the power failure synchronized signal.
• In case of using the synchronized deceleration function, make sure that overvoltage limit operation is not working during deceleration.

■ An example of setting when F302=4
Synchronized deceleration if a power failure synchronized signal is ON or if a power failure occurs. Synchronized acceleration if the power failure synchronized signal is canceled or power is restored.

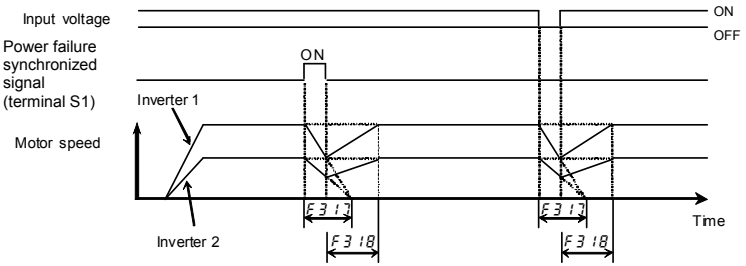
Input voltage
ON
OFF
Power failure synchronized signal (terminal S1)
ON
Inverter 1
Motor speed
F317
F318
F317
F318
Time
Inverter 2

6.19.3 Retry function

F303: Retry selection (number of times)

Caution	
Mandatory action	• Stand clear of motors and equipment. If the motor and equipment stop when the alarm is given, selection of the retry function will restart them suddenly after the specified time has elapsed. This could result in unexpected injury. • Attach caution label about sudden restart in retry function on inverters, motors and equipment for prevention of accidents in advance.

- Function
  This parameter resets the inverter automatically when the inverter gives an alarm. During the retry mode, the motor speed search function operates automatically when necessary and thus allows smooth motor restarting.

[Parameter setting]

Title	Function	Adjustment range	Default setting
F303	Retry selection (number of times)	0: Disabled, 1-10 (Times)	0

The likely causes of tripping and the corresponding retry processes are listed below.

Cause of tripping	Retry process	Canceling conditions
Overcurrent Overvoltage Overload Overheating Step-out (for PM motor only)	Up to 10 times in succession 1st retry: About 1 sec after tripping 2nd retry: About 2 sec after tripping 3rd retry: About 3 sec after tripping 10th retry: About 10 sec after tripping	The retry function will be canceled at once if tripping is caused by an unusual event other than: overcurrent, overvoltage, overload, overheating, or step-out. This function will also be canceled if retrying is not successful within the specified number of times.

- Retry is done only when the following trips occur.
  OC1, OC2, OC3, OP1, OP2, OP3, OL1, OL2, OL3, OH, SOUT
- Protective operation detection relay signals (FLA, FLB, FLC terminal signals) are not sent during use of the retry function. (Default setting)
- To allow a signal to be sent to the protective action detection relay (FLA, B and C terminals) even during the retry process, assign function numbers 146 or 147 to F132.
- A virtual cooling time is provided for overload tripping (OL1, OL2).
  In this case, the retry function operates after the virtual cooling time and retry time elapsed.
- In the event of tripping caused by an overvoltage (OP1 to OP3), the retry function will not be activated until the voltage in the DC section comes down to a normal level.
- In the event of tripping caused by overheating (OH), the retry function will not be activated until the temperature in the inverter is lowered enough for restarting operation.
- During retrying, rtry and the monitor display specified by Initial panel display selection parameter, F710, are displayed alternately.
- The number of retries will be cleared if the inverter is not tripped for the specified period of time after a successful retry.
  "A successful retry" means that the inverter output frequency reaches the command frequency without causing the inverter to re-trip.

6.19.4 Dynamic (regenerative) braking - For abrupt motor stop

F304: Dynamic braking selection

F308: Dynamic braking resistance

F309: Dynamic braking resistor capacity

F626: Over-voltage stall protection level

- Function
  The inverter does not contain a braking resistor. Connect an external braking resistor in the following cases to enable dynamic braking function:
  1) when decelerating the motor abruptly or if overvoltage tripping (OP) occurs during deceleration stop
  2) when a continuous regenerative status occurs during downward movement of a lift or the winding-out operation of a tension control machine
  3) when the load fluctuates and results in a continuous regenerative status even during constant speed operation of a machine such as a press

[Parameter setting]

Title	Function	Adjustment range	Default setting
F304	Dynamic braking selection	0: Disabled 1: Enabled, Resistor overload protection enabled 2: Enabled 3: Enabled, Resistor overload protection enabled (At ST terminal on) 4: Enabled (At ST terminal on)	0
F308	Dynamic braking resistance	1.0-1000 (Ω)	Depending on models (See Section 11.4)
F309	Dynamic braking resistor capacity	0.01-30.00 (kW)	
F626	Over-voltage stall protection level	100-150 (%)	136 (240V class) 141 (500V class)

- Overload status of braking resistor can be output by assigning the braking resistor overload pre-alarm (function number : 30,31) to any logic output terminal.

Note 1) The operation level of dynamic braking is defined by parameter F626.

Note 2) In case of parameter F304= 1 to 4, the inverter will be automatically set as “without overvoltage limit operation” and controlled so that the resistor consumes the regenerative energy from the motor. (The same function as F305= 1)

1) Connecting an external braking resistor (optional)

Separate-optional resistor (with thermal fuse)

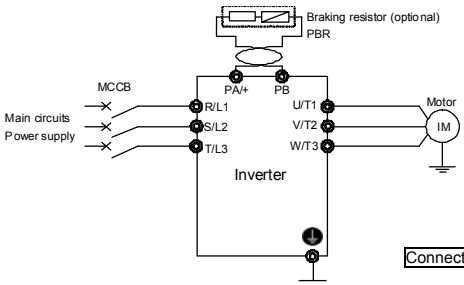

Connecting thermal relays and an external braking resistor

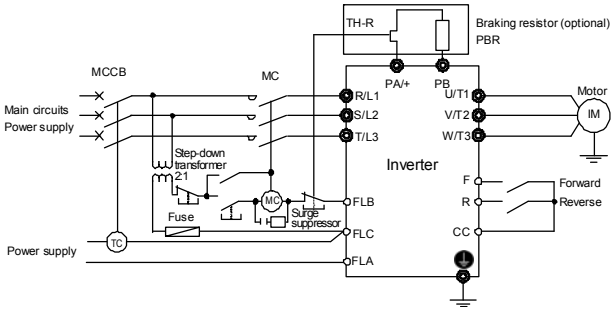

Note 1: A TC (Trip coil) is connected as shown in this figure when an MCCB with a trip coil is used instead of an MC. A step-down transformer is needed for every 500V-class inverter, but not for any 240V-class inverter.

Note 2: As a last resort to prevent fire, be sure to connect a thermal relay (THR). Although the inverter has a means of preventing overload and overcurrent to protect the braking resistor, the thermal relay is activated in case the protection function fails to work. Select and connect a thermal relay (THR) appropriately to the capacity (wattage) of the braking resistor.

[Parameter setting]

Title	Function	Setting
F304	Dynamic braking selection	1
F305	Overvoltage limit operation	1
F308	Dynamic braking resistance	Proper value
F309	Dynamic braking resistor capacity	Proper value
F626	Over-voltage stall protection level	136 (%) (240V class) 141 (%) (500V class)

- To use this inverter in applications that create a continuously regenerative status (such as downward movement of a lift, a press or a tension control machine), or in applications that require deceleration stopping of a machine with a significant load inertial moment, increase the dynamic braking resistor capacity according to the operation rate required.
- To connect an external dynamic braking resistor, select one with a resultant resistance value greater than the minimum allowable resistance value. Be sure to set the appropriate operation rate in F308 and F309 to ensure overload protection.
- When using a braking resistor with no thermal fuse, connect and use a thermal relay as a control circuit for cutting the power off.

2) Optional dynamic braking resistors

Optional dynamic braking resistors are listed below. All these resistors are 3%ED in operation rate

Inverter type	Braking resistor		
	Type-form	Rating	Continuous regenerative braking allowable capacity
VFS15-2004PM-W, 2007PM-W VFS15S-2002PL-W~2007PL-W	PBR-2007	120W-200Ω	90W
VFS15-2015PM-W, 2022PM-W VFS15S-2015PL-W, 2022PL-W	PBR-2022	120W-75Ω	90W
VFS15-2037PM-W	PBR-2037	120W-40Ω	90W
VFS15-2055PM-W, 2075PM-W	PBR7-004W015	440W-15Ω	130W
VFS15-2110PM-W, 2150PM-W	PBR7-008W7R5	880W-7.5Ω	270W
VFS15-4004PL-W~4022PL-W	PBR-2007	120W-200Ω	90W
VFS15-4037PL-W	PBR-4037	120W-160Ω	90W
VFS15-4055PL-W, 4075PL-W	PBR7-004W060	440W-60Ω	130W
VFS15-4110PL-W, 4150PL-W	PBR7-008W030	880W-30Ω	270W

Note 1: The data in Rating above refer to the resultant resistance capacities (watts) and resultant resistance values (Ω).

Note 2: Braking resistors for frequent regenerative braking are optionally available. For more information, contact your Toshiba distributor.

Note 3: Type-form of “PBR-” indicates the thermal fuse”. Type-form of “PBR7-“ indicates the thermal fuse and thermal relay.

Note 4: The default setting values of parameter F308 (Dynamic braking resistance) and F309 (Dynamic braking resistor capacity) are applied to braking resistor option.

6

3) Minimum resistances of connectable braking resistors

The minimum allowable resistance values of the externally connectable braking resistors are listed in the table below.

Do not connect braking resistors with smaller resultant resistances than the listed minimum allowable resistance values.

Inverter rated output capacity (kW)	240V Class		500V Class	
	Resistance of standard option	Minimum allowable resistance	Resistance of standard option	Minimum allowable resistance
0.2	200Ω	55Ω	-	-
0.4	200Ω	55Ω	200Ω	114Ω
0.75	200Ω	55Ω	200Ω	114Ω
1.5	75Ω	44Ω	200Ω	67Ω
2.2	75Ω	33Ω	200Ω	67Ω
4.0	40Ω	16Ω	160Ω	54Ω
5.5	15Ω	12Ω	60Ω	43Ω
7.5	15Ω	12Ω	60Ω	28Ω
11	7.5Ω	5Ω	30Ω	16Ω
15	7.5Ω	5Ω	30Ω	16Ω

Note: Be sure to set F308 (Dynamic braking resistance) at the resistance of the dynamic braking resistor connected.

6.19.5 Avoiding overvoltage tripping

F305: Overvoltage limit operation

F319: Regenerative over-excitation upper limit

F626: Overvoltage stall protection level

- Function
  These parameters are used to keep the output frequency constant or increase it to prevent overvoltage tripping in case the voltage in the DC section rises during deceleration or varying speed operation. The deceleration time during overvoltage limit operation may increase above the designated time.

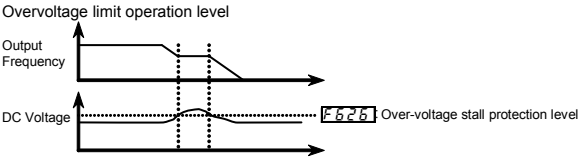

[Parameter setting]

Title	Function	Adjustment range	Default setting
F305	Overvoltage limit operation (Deceleration stop mode selection)	0: Enabled 1: Disabled 2: Enabled (Quick deceleration control) 3: Enabled (Dynamic quick deceleration control)	2
F319	Regenerative over-excitation upper limit	100-160 (%)	120*1
F626	Overvoltage stall protection level	100-150 (%) *2	136 (240V class) 141 (500V class)

*1: Default setting values vary depending on the setup menu setting. Refer to section 11.5.

*2: 100% corresponds to an input voltage of 200V for 240V models or to an input voltage of 400V for 500V models.

- If F305 is set to 2 (quick deceleration control), the inverter will increase the voltage to the motor (over-excitation control) to increase the amount of energy consumed by the motor when the voltage reaches the overvoltage protection level during deceleration, and therefore the motor can be decelerated more quickly than normal deceleration.
- If F305 is set to 3 (dynamic quick deceleration control), the inverter will increase the voltage to the motor (over-excitation control) to increase the amount of energy consumed by the motor as soon as the motor begins to deceleration, and therefore the motor can be decelerated still more quickly than quick deceleration.
- During overvoltage limit operation, the overvoltage pre-alarm (P blinks) is displayed.
- The parameter F319 is used to adjust the maximum energy that the motor consumes during deceleration. Specify a larger value if the inverter trips during deceleration because of an overvoltage. When F305 is set 2 or 3, this function works.
- Parameter F626 serves also as a parameter for setting the regenerative braking level.

6.19.6 Output voltage adjustment/Supply voltage correction

uLu : Base frequency voltage 1

F307 : Supply voltage correction (output voltage limitation)

• Function
Supply voltage correction: Prevent torque decline during low-speed operation.
Maintains a constant V/F ratio, even when the input voltage fluctuates.
Output voltage limitation: Limits the voltage at frequencies exceeding the base frequency (uL) to prevent outputting the voltage exceeding base frequency voltage (uLu).
Applied when operating a special motor with low induced voltage.

[Parameter setting]

Title	Function	Adjustment range	Default setting
uLu	Base frequency voltage1	50-330 (240V class) 50-660 (500V class)	*1
F307	Supply voltage correction (output voltage limitation)	0: Supply voltage uncorrected, output voltage limited	*1
		1: Supply voltage corrected, output voltage limited	
		2: Supply voltage uncorrected, output voltage unlimited	
		3: Supply voltage corrected, output voltage unlimited	

*1: Default setting values vary depending on the setup menu setting. Refer to section 11.5.

- If F307 is set to "0" or "2", the output voltage will change in proportion to the input voltage.
- Even if the base frequency voltage (uLu parameter) is set above the input voltage, the output voltage will not exceed the input voltage.
- The ratio of voltage to frequency can be adjusted according to the rated motor voltage and frequency. Setting F307 to "0" or " 1" prevents the output voltage from increasing, even if the input voltage changes when operation frequency exceeds the base frequency.
- When the V/F control mode selection parameter (Pt) is set to any number between 2 to 6, the supply voltage is corrected regardless of the setting of F307.

6

[F307=0: No voltage compensation/output voltage limited]

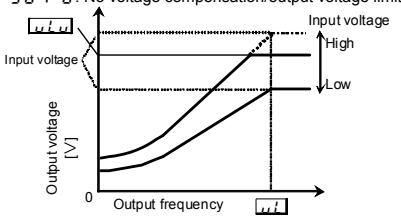

* The above is applied when V/F control mode selection parameter Pt is set to "0" or "1".

$\frac{uLu}{\text{Rated voltage}} > 1$ the output voltage can be prevented from exceeding the input voltage.

[F307=1: Voltage compensation/output voltage limited]

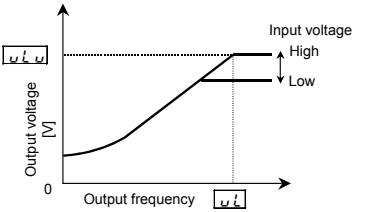

[F307=2: No voltage compensation/no output voltage limit]

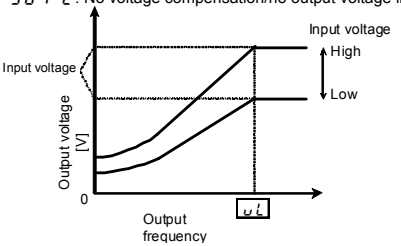

* The above is applied when V/F control mode selection parameter Pt is set to "0" or "1".

$\frac{uLu}{\text{Rated voltage}} > 1$ the output voltage can be prevented from exceeding the input voltage.

[F307=3: Voltage compensation/no output voltage control]

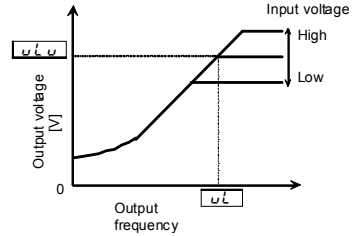

* Note that even if the input voltage is set less than uLu, an output voltage over uLu occurs for a base frequency of uL or higher output frequency.

Note: Rated voltage is fixed at 200V for 240V class and 400V for 500V class.

6.19.7 Reverse-run prohibition

F311: Reverse-run prohibition

- Function
  This function prevents the motor from running in the forward or reverse direction when it receives the wrong operation signal.

[Parameter setting]

Title	Function	Adjustment range	Default setting
F311	Reverse-run prohibition	0: Forward/reverse run permitted 1: Reverse run prohibited 2: Forward run prohibited	0

6.20 Drooping control

F320: Droop gain

F323: Droop insensitive torque band

F324: Droop output filter

- Function
  Drooping control has the function to prevent loads from concentrating at a specific motor because of a load imbalance when multiple inverters are used to operate one machine.
  These parameters are used to allow the motor to “slip” according to the load torque current. The insensitive torque band and the gain can be adjusted using these parameters.

[Parameter setting]

Title	Function	Adjustment range	Default setting
F320	Droop gain	0.0-100.0 (%)	0.0
F323	Droop insensitive torque band	0-100 (%)	10
F324	Droop output filter	0.1-200.0	100.0

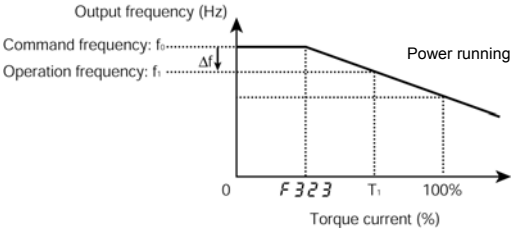

- The drooping control function is to operate the power-running motor at operating frequency f_1 (Hz), which is lower than command frequency f_0 (Hz) by droop frequency Δf (Hz), when the torque current is T_1 (%). (See the figure above.)
- The droop frequency Δf can be calculated using the following expression.
  Droop frequency Δf (Hz)=base frequency uL × F320× (Torque current T_1 - F323)
- When the torque current is above the specified droop insensitive torque band (F323), the frequency is reduced during power running or increased during regenerative braking. The figure above shows an example of the operating frequency during power running. During regenerative braking, control is performed to increase the frequency.
- The drooping control function is activated above the torque current set with F323.
- The amount of droop frequency Δf varies depending on the amount of torque current T_1.

Note: If the base frequency uL exceeds 100Hz, count it as 100Hz.
Control is exercised between the starting frequency (F240) and the maximum frequency (FH).

[An example of calculation]
Parameter setting: Base frequency uL =60 (Hz), droop gain F320=10 (%)
Droop insensitive torque band F323=30 (%)
Droop frequency Δf (Hz) and operating frequency f_1 when command frequency f_0 is 50 (Hz) and torque current T_1 is 100 (%) are as follows;

Droop frequency Δf (Hz)=uL × F320 × (T_1 - F323)
=60 (Hz) × 10 (%) × (100 (%) - 30 (%))
=4.2 (Hz)
Operation frequency f_1 (Hz) = f_0 - Δf = 50 (Hz) - 4.2 (Hz)=45.8 (Hz)

6.21 Light-load high-speed operation function

F328 : Light-load high-speed operation selection

F329 : Light-load high-speed learning function

F330 : Automatic light-load high-speed operation frequency

F331 : Light-load high-speed operation switching lower limit frequency

F332 : Light-load high-speed operation load waiting time

F333 : Light-load high-speed operation load detection time

F334 : Light-load high-speed operation heavy load detection time

F335 : Switching load torque during power running

F336 : Heavy-load torque during power running

F337 : Heavy-load torque during constant power running

F338 : Switching load torque during regenerative braking

⇒ Refer to “Functions for lift application: E6581871” for details.

6. 22 Braking function

6.22.1 Brake sequence control

F325: Brake releasing waiting time

F326: Brake releasing small current detection level

F340: Creeping time 1

F341: Braking mode selection

F342: Load portion torque input selection

F343: Hoisting torque bias input

F344: Lowering torque bias multiplier

F345: Brake release time

F346: Creeping frequency

F347: Creeping time 2

F348: Braking time learning function

⇒ Refer to “Functions for lift application: E6581871” for details.

6.22.2 Hit and stop control

F382: Hit and stop control

F383: Hit and stop control frequency

⇒ Refer to “Hit & Stop control: E6581873” for details.

6.23 Acceleration/deceleration suspend function (Dwell function)

F349 : Acceleration/deceleration suspend function

F350 : Acceleration suspend frequency

F351 : Acceleration suspend time

F352 : Deceleration suspend frequency

F353 : Deceleration suspend time

• **Function**

This function suspends acceleration and deceleration when starting and stopping during the transportation of heavy load by temporarily running the motor at a constant speed according to the delay in braking. It also prevents the occurrence of overcurrent at starting and slippage at stopping by fixing the timing with brake.

There are two ways to suspend acceleration or deceleration: suspending it automatically by setting the suspend frequency and time using parameters, and suspending it by means of a signal from an external control device.

[Parameter setting]

Title	Function	Adjustment range	Setting value
F349	Acceleration/deceleration suspend function	0:Disabled 1:Parameter setting 2:Terminal input	0
F350	Acceleration suspend frequency	0.0-FH (Hz)	0.0
F351	Acceleration suspend time	0.0-10.0 (s)	0.0
F352	Deceleration suspend frequency	0.0-FH (Hz)	0.0
F353	Deceleration suspend time	0.0-10.0 (s)	0.0

Note1: The acceleration suspend frequency (F350) should not be set below the starting frequency (F240).

Note2: The deceleration suspend frequency (F352) should not be set below the stop frequency (F243).

Note3: If the output frequency is lowered by a stall prevention function, the acceleration suspend function may be activated.

1) To suspend acceleration or deceleration automatically

Set the frequency with F350 or F352 and the time with F351 or F353, and then set F349 to 1.
When reached the set frequency, the motor stops accelerating or decelerating to run at a constant speed.

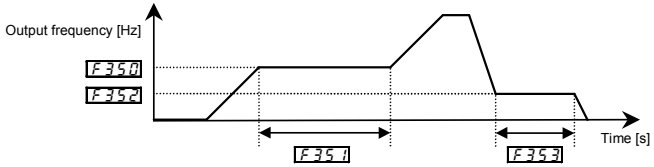

2) To suspend acceleration or deceleration by means of a signal from an external control device

Set 60 for an input terminal. As long as ON signals are inputted, the motor continues to rotate at a constant speed.

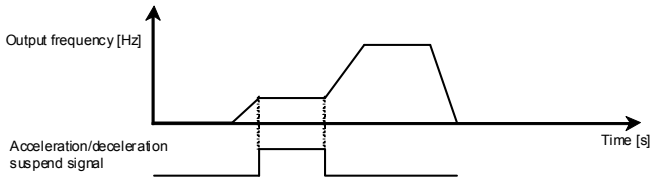

Ex.) When setting the acceleration/deceleration suspend signal to S3 terminal

Title	Function	Adjustment range	Example of setting
F116	Input terminal selection 6 (S3)	0-203	60 (Acceleration/ deceleration suspend signal)

Function No. 61 is the inversion signal.

Note: If the operation signal is ON after Acceleration/ deceleration suspend signal is ON, the inverter will operate at frequency set with F240.

■ If the stall control function is activated during constant-speed rotation

The frequency changes momentarily as a result of stall control, but the time for which the frequency changes is included in the suspend time.

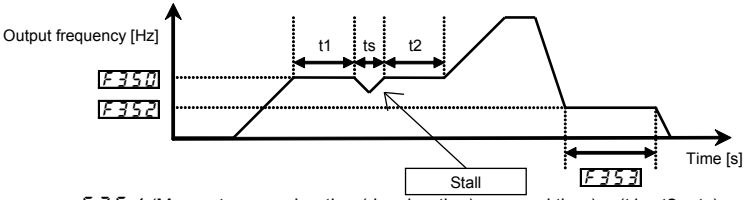

F351 (Momentary acceleration (deceleration) suspend time) = (t1 + t2 + ts)

■ **Stall control**

The inverter will automatically change the operation frequency when it detects an overcurrent, overload or overvoltage. Configure each stall control setting using the following parameters.

Overcurrent stall : F601 (Stall prevention level 1)
Overload stall : OLM (Electronic thermal protection characteristic selection)
Overvoltage stall : F305 (Overvoltage limit operation)

Note: When the frequency command value, the acceleration suspend frequency (F350), and the deceleration suspend frequency (F352) have the same setting, the acceleration/ deceleration suspend function will not work.

6.24 PID control

FPId: Process input value of PID control

F167: Frequency command agreement detection range

F359: PID control waiting time

F360: PID control

F361: Delay filter

F362: Proportional gain

F363: Integral gain

F366: Differential gain

F367: Process upper limit

F368: Process lower limit

F369: PID control feedback signal selection

F372: Process increasing rate (speed type PID control)

F373: Process decreasing rate (speed type PID control)

F380: PID forward/reverse characteristics selection

F389: PID control reference signal selection

- Function
  Process control including keeping airflow, pressure, and the amount of flow constant, can be exercised using feedback signals (4 to 20mA, 0 to 10V) from a detector.
  Or, it is also possible to always set 0 for integral and differential at terminal input.

⇒ Refer to "PID control instruction manual: E6581879" for details.

[Parameter setting]

Title	Function	Adjustment range	Default setting
FPId	Process input value of PID control	F368 - F367 (Hz)	0.0
F359	PID control waiting time	0-2400 (s)	0
F360	PID control	0: Disabled 1: Process type PID control 2: Speed type PID control	0
F361	Delay filter	0.0-25.0 (s)	0.1
F362	Proportional gain	0.01-100.0	0.30
F363	Integral gain	0.01-100.0	0.20
F366	Differential gain	0.00-2.55	0.00
F367	Process upper limit	0.0-FH (Hz)	60.0 *1
F368	Process lower limit	0.0-F367 (Hz)	0.0
F369	PID control feedback signal selection	0: Disabled 1: Terminal VIA 2: Terminal VIB 3: Terminal VIC 4 to 6: -	0
F372	Process increasing rate (speed type PID control)	0.1-600.0 (s)	10.0
F373	Process decreasing rate (speed type PID control)	0.1-600.0 (s)	10.0
F380	PID forward/reverse characteristics selection	0: Forward 1: Reverse	0
F389	PID control reference signal selection	0: FMOd / F207 selected 1: Terminal VIA 2: Terminal VIB 3: FPId 4: RS485 communication 5: UP/DOWN from external logic input 6: CANopen communication 7: Communication option 8: Terminal VIC 9, 10: - 11: Pulse train input	0

*1: Default setting value vary depending on the setup menu setting. Refer to section 11.5.

1) External connection

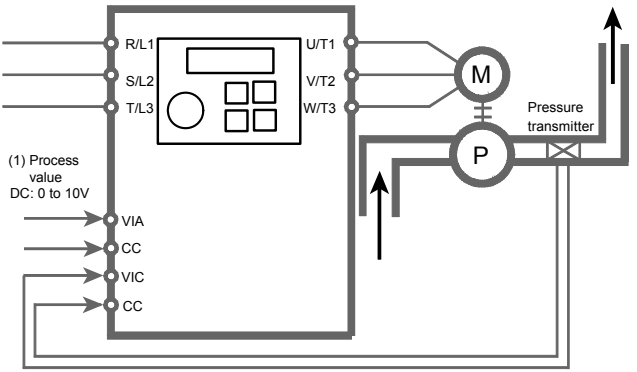

2) Selecting process value and feedback value

Process value (frequency) and feedback value can be combined as follows for the PID control.

(1) Process value	(2) Feedback value
PID control reference signal selection F389	PID control feedback signal selection F369
0: FMOd/F207 selected 1: Terminal VIA 2: Terminal VIB 3: FP1d 4: RS485 communication 5: UP/DOWN from external logic input 6: CANopen communication 7: Communication option 8: Terminal VIC 9, 10: - 11: Pulse train input	0: Disabled 1: Terminal VIA 2: Terminal VIB 3: Terminal VIC 4 to 6: -

Note 1: When setting F389, do not select the same signal used for feedback input.

Note 2: The changing value by setting dial is selected as follows.

-FC setting: FC setting (FMOd or F207=0 or 3) is valid.

-FP1d setting: fpid is selected (F389=3) and FC setting is invalid.

Note 3: Signal is put out when the amount of feedback matches to the amount of processing. Assign function number 144 or 145 to an output terminal.

Frequency agreement detection range (F167) can also be set.

3) Setting PID control

Set "1" (Process type PID control operation) in the parameter F360 (PID control).

(1) Set parameters ACC (acceleration time) and dEC (deceleration time) to the system fitting values.

(2) Please set the following parameters to place limits to the setting value and the control value.

Placing a limit to the process value : The parameter F367(Process upper limit), F368 (Process lower limit)

Placing a limit to the output frequency : The parameter UL (Upper limit frequency), LL (Lower limit frequency)

Note 4: Assigning the function number 36 (PID control prohibition) to an input terminal. PID control function is stopped temporarily while the terminal is ON.

4) Adjusting the PID control gain level

Adjust the PID control gain level according to the process quantities, the feedback signals and the object to be controlled.

[Parameter settings]

Title	Function	Adjustment range	Default setting
F362	Proportional gain (P)	0.01 - 100.0	0.30
F363	Integral gain (I)	0.01 - 100.0 (1/ s^{-1})	0.20
F366	Derivative gain (D)	0.00 - 2.55 (s)	0.00

6

F362 (P-gain adjustment parameter)

This parameter adjusts the proportional gain level during PID control. A correction value proportional to the particular deviation (the difference between the process value and the feedback value) is obtained by multiplying this deviation by the parameter setting.

A larger P-gain adjustment value gives faster response. Too large an adjustment value, however, results in an unstable event such as hunting.

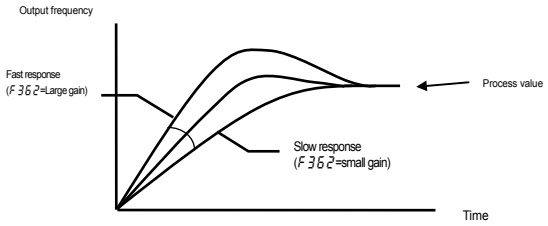

F363 (I-gain adjustment parameter)

This parameter adjusts the integral gain level during PID control. Any remaining deviations (residual deviation offset) during proportional action are cleared to zero.
A larger I-gain adjustment value reduces residual deviations. Too large an adjustment value, however, results in an unstable event such as hunting.

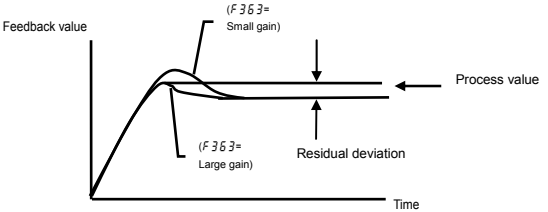

- Assign function number 52 (PID integral/derivative clear) to an input terminal. It is possible to calculate integral/derivative amounts always as 0 (zero) while the input terminal is ON.

F366 (D-gain adjustment parameter)

This parameter adjusts the differential gain level during PID control. This gain increases the speed of response to a rapid change in deviation (difference between the process value and the feedback value). Note that setting the gain beyond necessity may cause fluctuations in output frequency, and thus operation to become unstable.

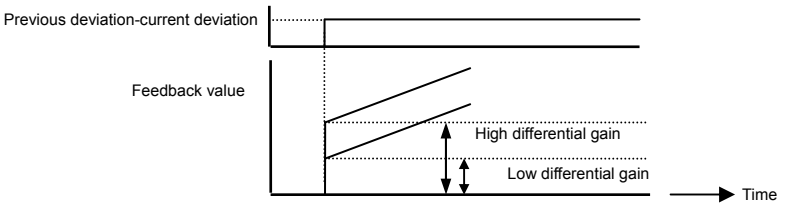

- Assign function number 52 (PID integral/derivative clear) to an input terminal, and it is possible to calculate integral/derivative amounts always as 0 (zero) while the input terminal is ON,.

5) Adjusting feedback input

Make adjustment by converting input level of the feedback amount into frequency. Refer to section 6.10.2 for details.

Example of 0 - 10 Vdc voltage input setting

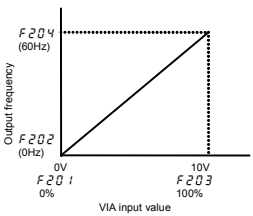

Example of 0 - 10 Vdc voltage input setting

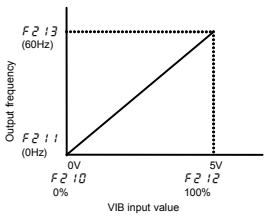

Example of 4 - 20 mAdc voltage input setting

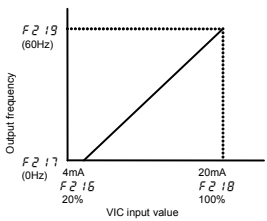

6) Setting the time elapsed before PID control starts

Waiting time until starting PID control system can be set to avoid PID control until the control system becomes stable.

The inverter ignores feedback input signals, carries out operation at the frequency determined by the frequency command value for the period of time specified with F359, and enters the PID control mode after the elapsed time.

7) PID control forward/reverse characteristic switch

PID input characteristics can be reversed.

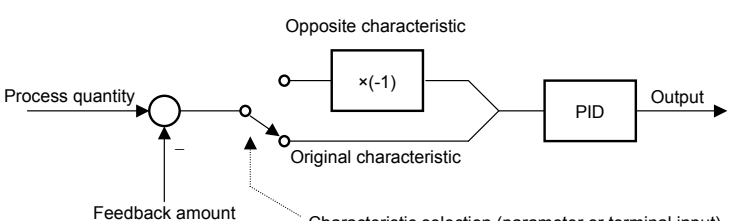

- When characteristic is reversed according to parameters, set PID calculation reverse selection parameter F380 is 1: Set reverse characteristics.
- When characteristic is reversed using logic input terminal, assign function number 54/55, PID characteristics switching, to an input terminal.

  Note) If reverse characteristics is selected for parameter F380 and terminal input at the same time, they become forward characteristic.

8) Comparing process quantity and feedback amount

If the frequency command value specified using F389 and the frequency command value from F369 match the range of ± F167, an ON or OFF signal will be sent out from the output terminal.

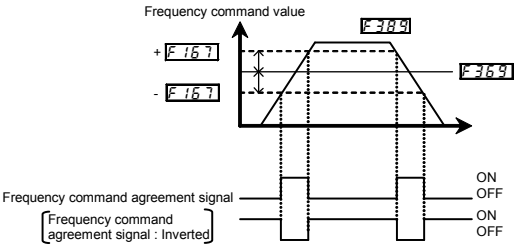

6

6.25 Setting motor constants

6.25.1 Setting motor constants for induction motors

F400: Auto-tuning
F401: Slip frequency gain
F402: Automatic torque boost value
F405: Motor rated capacity
F415: Motor rated current
F416: Motor no-load current
F417: Motor rated speed
F459: Load inertia moment ratio
F462: Speed reference filter coefficient

To use vector control, automatic torque boost and automatic energy saving, motor constant setting (motor tuning) is required. The following three methods are available to set motor constants.

1) Using the torque boost setting macro function (AU2) for setting the V/F control mode selection (Pt) and auto-tuning (F400=2) collectively
2) Setting V/F control mode selection (Pt) and auto-tuning (F400) independently
3) Combining the V/F control mode selection (Pt) and manual tuning

6

Caution:
If the settings for V/F control mode selections Pt are 2: automatic torque boost control, 3: vector control, 4: energy-saving, and 5: Dynamic energy-saving, make sure to confirm the motor's name plate and set the following parameters;
uL : Base frequency 1 (rated frequency)
uLu: Base frequency voltage 1 (rated voltage)
F405: Motor rated capacity
F415: Motor rated current
F417: Motor rated speed
Set the other motor constants as necessary.

[Selection 1: Setting by parameter setting macro torque boost]

This is the easiest among the available methods. It conducts vector control and auto-tuning at the same time. Be sure to set the motor for uL, uLu, F405, F415, F417.

Set AU2 to 1 (Automatic torque boost + auto-tuning)

Set AU2 to 2 (Vector control + auto-tuning)

Set AU2 to 3 (Energy-saving + auto-tuning)

Refer to section 6.1.5 for details of the setting method.

[Selection 2: Setting vector control and auto-tuning independently]

Set vector control, automatic torque boost, energy saving and auto-tuning individually.
After setting Pt (V/F control mode selection), auto-tuning starts.

Set the auto-tuning parameter F400 to 2 (Auto-tuning enabled)

[Parameter setting]

Title	Function	Adjustment range	Default setting
F400	Auto-tuning	0: Auto-tuning disabled 1: Initialization of F402 (after execution : 0) 2: Auto-tuning executed (after execution: 0) 3: - 4: Motor constant auto calculation (after execution: 0) 5: 4+2 (after execution: 0)	0

Set F400 to 2 before the start of operation. Auto-tuning is performed at the start of the motor and set F402, F412.

- Precautions on auto-tuning
  (1) Conduct auto-tuning after the motor has been connected properly and operation completely stopped.
  If auto-tuning is conducted immediately after operation stops, the presence of a residual voltage may result in abnormal tuning.
  (2) Voltage is applied to the motor during tuning even though it barely rotates. During tuning, "Atn" is displayed on the operation panel.
  (3) Tuning is performed when the motor starts for the first time after F400 is set to 2.
  Tuning is usually completed within three seconds. If it is aborted, the motor will trip with the display of Etn1 and no constants will be set for that motor.
  (4) High-speed motors, high-slip motors or other special motors cannot be auto-tuned. For these motors, perform manual tuning using Selection 3 described below.
  (5) Provide cranes and hoists with sufficient circuit protection such as mechanical braking. Insufficient motor torque while tuning may cause machine stalling/falling.
  (6) If auto-tuning is impossible or an "Etn1" auto-tuning error is displayed, perform manual tuning with selection 4.

[Selection 3: Setting vector control and motor constant automatically]

After setting uL, uLu, F405, F415 and F417, motor constants calculated automatically.
F402, F412 and F416 are set automatically.

Set the motor constant parameter F400 to 4 (auto calculation)

Set F400=5 when auto-tuning is executed after setting motor constants automatically.

[Selection 4: Setting vector control and manual tuning independently]

If an "Etn1" tuning error is displayed during auto-tuning or when vector control characteristics are to be improved, set independent motor constants.

[Parameter setting]

Title	Function	Adjustment range	Default setting
F401	Slip frequency gain	0-250 (%)	70
F402	Automatic torque boost value	0.1-30.0 (%)	Depends on the capacity (Refer to section 11.4)
F405	Motor rated capacity	0.01-22.00 (kW)	
F415	Motor rated current	0.01-100.0 (A)	
F416	Motor no-load current	10-90 (%)	
F417	Motor rated speed	100-64000 (min^{-1})	*1
F459	Load inertia moment ratio	0.1-100.0 (times)	1.0
F462	Speed reference filter coefficient	0-100	35
tHr	Motor electronic thermal protection level 1	10-100 (%) / (A)	100

*1: Default setting values vary depending on the setup menu setting. Refer to section 11.5.

Setting procedure Adjust the following parameters:

F401: Set the compensation gain for the slipping of the motor. A higher slip frequency reduces motor slipping correspondingly. After setting F417, set F401 for fine adjustment. Be careful as inputting a value larger than necessary causes hunting and other unstable operation.

F402: Adjust the primary resistive component of the motor. Torque reduction due to possible voltage drop during low-speed operation can be suppressed by setting a large value in this parameter. Be careful as setting a value larger than necessary may lead to an increased current and then cause a trip at low speeds. (Perform adjustments according to the actual operation.)

F405: Set the motor's rated capacity according to the motor's name plate or test report.

F415: Set the rated current of the motor. For the rated current, see the motor's nameplate or test report.

F416: Set the ratio of the no-load current of the motor to the rated current. Enter the value in % that is obtained by dividing the no-load current specified in the motor's test report by the rated current. A larger value increases the excitation current.

F417: Set the rated rotational speed of the motor. For the rated current, see the motor's nameplate or test report.

● Adjustment method for the moment of inertia of the load

F459: Adjusts the excess response speed. A larger value gives a smaller overshoot at the acceleration/deceleration completion point. In the default settings, the moment of inertia of the load (including the motor shaft) value is optimally set considering a motor shaft of 1x. When the moment of inertia of the load is not 1x, set a value that matches that actual moment of inertia of the load.

tHr : If the rated capacity of the motor is one size smaller than that of the inverter, lower the thermal protective level according to the rated current of the motor.

Caution:
If a combination of the inverter rating and the motor capacity is different for more than 2 classes, vector control may not operate correctly.

6.25.2 Setting motor constants for PM motors

F400: Auto-tuning
F402: Automatic torque boost value
F405: Motor rated capacity
F415: Motor rated current
F417: Motor rated speed
F459: Load inertia moment ratio
F462: Speed reference filter coefficient
F912: q-axis inductance
F913: d-axis inductance

Caution:
If the settings for V/F control mode selections Pt is 6: vector control for PM motor
Look at the motor's name plate and set the following parameters.
uL : Base frequency 1 (rated frequency) that is calculated from Back EMF
uLv: Base frequency voltage 1 (rated voltage) that is calculated from Back EMF
F405: Motor rated capacity
F415: Motor rated current
F417: Motor rated speed
F912: Q axis inductance per phase
F913: D axis inductance per phase

6

[Selection 1: Setting PM motor control and auto-tuning]

After setting Pt =6, auto-tuning occurs.

Set the auto-tuning parameter F400 to 2 (Auto-tuning enabled)

[Parameter setting]

Title	Function	Adjustment range	Default setting
F400	Auto-tuning	0: Auto-tuning disabled 1: Initialization of F402, F912, F913 (after execution : 0) 2: Auto-tuning executed (after execution: 0) 3: - 4: - 5: -	0

Note1) When parameter Pt = 6 is selected, F400=3 to 5 do not work.

Set F400 to 2 to before the start of operation. Tuning is performed at the start of the motor.

- Precautions on auto-tuning
  (1) Conduct auto-tuning after the motor has been connected properly and operation completely stopped.
  If auto-tuning is conducted immediately after operation stops, the presence of a residual voltage may result in abnormal tuning.
  (2) Voltage is applied to the motor during tuning even though it barely rotates. During tuning, "Atn" is displayed on the operation panel.
  (3) Tuning is performed when the motor starts for the first time after F400 is set to 2.
  Tuning is usually completed within three seconds. If it is aborted, the motor will trip with the display of Etn 1 and no constants will be set for that motor.
  (4) If special motors cannot be auto-tuned, perform manual tuning follow Selection 2 described below.
  (5) Provide cranes and hoists with sufficient circuit protection such as mechanical braking. Insufficient motor torque while tuning may cause machine stalling/falling.
  (6) If auto-tuning is impossible or an "Etn 1" auto-tuning error is displayed, perform manual tuning with Selection 2.

[Selection 2: Setting PM motor control and manual tuning]

6

If an "Etn 1" tuning error is displayed during auto-tuning or when PM motor control characteristics are to be improved, set motor constants manually.

[Parameter setting]

Title	Function	Adjustment range	Default setting
F402	Automatic torque boost value	0.1-30.0 (%)	Depends on the capacity (Refer to section 11.4)
F405	Motor rated capacity	0.01-22.00 (kW)	
F415	Motor rated current	0.01-100.0 (A)	
F417	Motor rated speed	100-64000 (min^{-1})	*1
F459	Load inertia moment ratio	0.1-100.0 (times)	1.0
F462	Speed reference filter coefficient	0-100	35
F912	Q axis inductance per phase	0.01-650.0 (mH)	10.00
F913	D axis inductance per phase	0.01-650.0 (mH)	10.00
tHr	Motor electronic thermal protection level 1	10-100 (%) / (A)	100

*1: Default setting values vary depending on the setup menu setting.

Setting procedure Adjust the following parameters:

F402: Adjust the primary resistive component of the motor. Decreases in torque due to a possible voltage drop during low-speed operation can be suppressed by setting a large value in this parameter. Be careful as setting a value larger than necessary may lead to an increased current causing a trip at low speeds. (Perform adjustments according to the actual operation.) If the test report exists, see the stator resistance value per phase.

$F402 = \sqrt{3} \times Rs \times F415 / Vtype \times 100$ [%]

Rs is Stator resistance per phase [ohm]) Vtype is 200 or 400 [V] (depend on voltage class)

F405: Set the motor's rated capacity according to the motor's name plate or test report.
F415: Set the rated current of the motor. For the rated current, see the motor's nameplate or test report.
F417: Set the rated rotational speed of the motor. For the rated current, see the motor's nameplate or test report.

- Adjustment method for the moment of inertia of the load

F459: Adjusts the excess response speed. A larger value gives a smaller overshoot at the acceleration/deceleration completion point. In the default settings, the moment of inertia of the load (including the motor shaft) value is optimally set considering a motor shaft of 1x. When the moment of inertia of the load is not 1x, set a value that matches that actual moment of inertia of the load.
tHr : If the rated capacity of the motor is one size smaller than that of the inverter, lower the thermal protective level according to the rated current of the motor.
*Sensorless vector control may not operate properly if the motor capacity differs from the applicable rated capacity of the inverter by more than two grades.

Caution:
If a combination of the inverter rating and the motor capacity is different for more than 2 items, PM motor control may not operate correctly.

6.26 Torque limit

6.26.1 Torque limit switching

F441: Power running torque limit 1 level
F443: Regenerative braking torque limit 1 level
F444: Power running torque limit 2 level
F445: Regenerative braking torque limit 2 level
F454: Constant output zone torque limit selection

- **Function**
  Decrease the output frequency according to the overload condition when the motor torque reaches a certain set level. This function will be invalid when setting a torque limit parameter at 250.
  You can also select limiting the constant output or constant torque in the constant output zone.
  This function will not work when the parameter Pt=0, 1, 7 setting.

■ Setting methods

When setting limits to torque, use internal parameters (Torque limits can also be set with an external control device.)

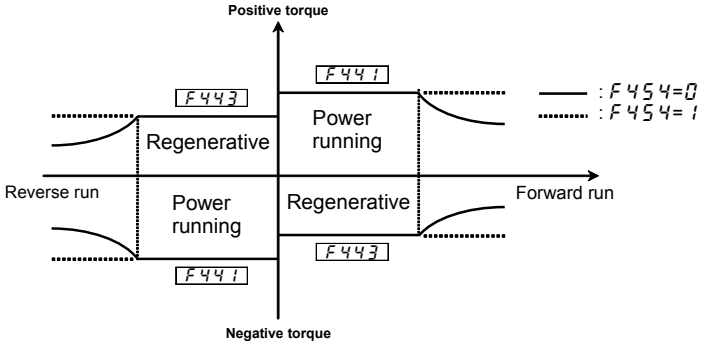

With the parameter F454, you can select the item for limit treatment in the constant output zone (somewhat weak magnetic field) from constant output (F454=0: default setting) or constant torque (F454=1).
Output voltage limit option(F307=1) is recommended for the parameter F307 (supply voltage correction).

Power running torque limit and regenerative braking torque limit can be set with the parameters F441 and F443.

[Parameter setting]

Title	Function	Adjustment range	Default setting
F441	Power running torque limit 1 level	0.0-249.9 (%), 250.0: Disabled	250.0
F443	Regenerative braking torque limit 1 level	0.0-249.9 (%), 250.0: Disabled	250.0
F454	Constant output zone torque limit selection	0: Constant output limit 1: Constant torque limit	0

Using parameters, two different torque limits can be set for each operating status: power running and regenerative braking. Refer to Section 7.2.1 for the setting for switching from the terminal board.

Power running torque limit 1 : F441 Regenerative braking torque limit 1 : F443

Power running torque limit 2 : F444 Regenerative braking torque limit 2 : F445

Note: If the value set with F601 (stall prevention level) is smaller than the torque limit, then the value set with F601 acts as the torque limit.

6.26.2 Torque limit mode selection at acceleration/deceleration

6

F451: Acceleration/deceleration operation after torque limit

- **Function**

Using this function in combination with the mechanical brake of the lifting gear (such as a crane or hoist) makes it possible to minimize the delay before the brake starts working, and thus prevents the load from falling due to torque decrease.

Moreover, it improves the motor's response during inching operation and keeps the load from sliding down.

[Parameter setting]

Title	Function	Adjustment range	Default setting
F451	Acceleration/deceleration operation after torque limit	0: In sync with acceleration / deceleration 1: In sync with min. time	0

(1) F451=0 (In sync with acceleration/deceleration)

The increase in operation frequency is inhibited by the activation of the torque limit function. In this control mode, therefore, the actual speed is always kept in sync with the operation frequency. The operation frequency restarts to increase when torque decreases as a result of the release of the mechanical brake, so the time required for reaching the specified speed is the sum of the delay in operation of the mechanical brake and the acceleration time.

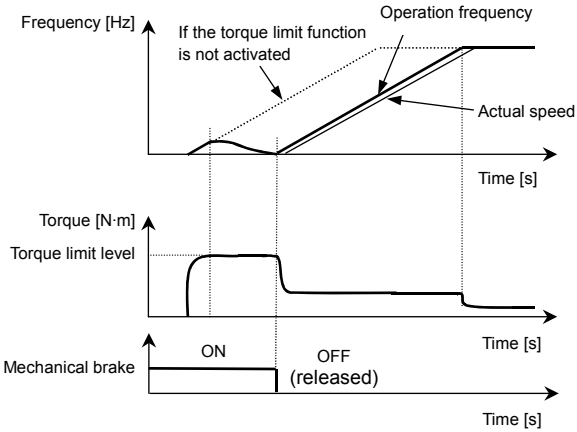

(2) F45 1= 1(In sync with min. time)

The operation frequency keeps increasing, even if the torque limit function is activated.

In this control mode, the actual speed is kept in sync with the operation frequency, while torque is held at a limit level in spite of torque decrease when releasing the mechanical brake. The use of this function prevents the load from failing and improves the motor's response during inching operation.

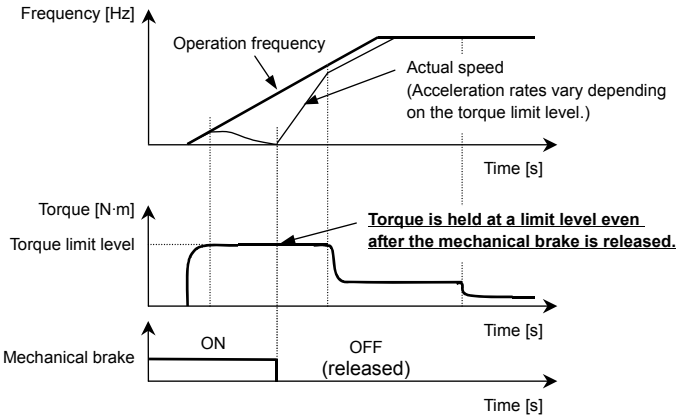

6.26.3 Power running stall continuous trip detection time

F452: Power running stall continuous trip detection time

• **Function**
A function for preventing lifting gear from failing accidentally. If the stall prevention function is activated in succession, the inverter judges that the motor has stalled and trips.

[Parameter setting]

Title	Function	Adjustment range	Default setting
F452	Power running stall continuous trip detection time	0.00-10.00 (s)	0.00
F441	Power running torque limit 1 level	0-249%, 250:Disabled	250
F601	Stall prevention level 1	10-199, 200 (disabled)	150

1) In case of overcurrent stall

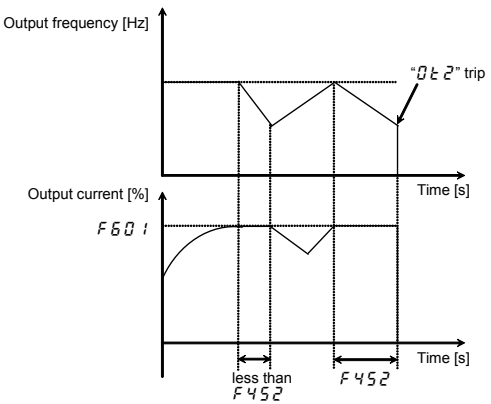

Ot2 trip is occurred if the output current reached the stall prevention level (F601) or more, and this situation maintain in F452 during power running.

2) In case of torque limitation

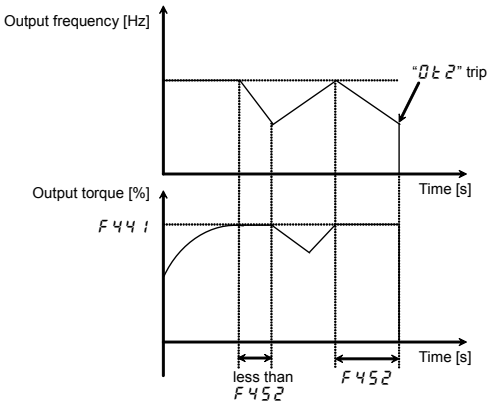

Ot2 trip is occurred if the output torque reached the power running torque limit level (F441) or more, and this situation maintain in F452 during power running.

6.27 Acceleration/deceleration time 2 and 3

6.27.1 Selecting acceleration/deceleration patterns

F502: Acceleration/deceleration 1 pattern
F506: S-pattern lower-limit adjustment amount
F507: S-pattern upper-limit adjustment amount

- Function
  These parameters allow you to select an acceleration/deceleration pattern that suits the intended use.

Title	Function	Adjustment range	Default setting
F502	Acceleration/deceleration 1 pattern	0: Linear, 1: S-pattern 1, 2: S-pattern 2	0
F506	S-pattern lower-limit adjustment amount	0-50 (%)	10
F507	S-pattern upper-limit adjustment amount	0-50 (%)	10

1) Linear acceleration/deceleration
A general acceleration/deceleration pattern.
This pattern can usually be used.

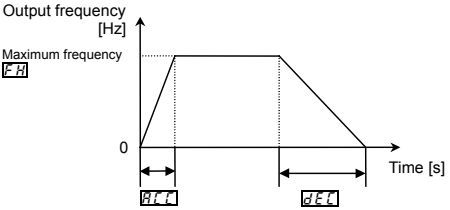

2) S-pattern 1 acceleration/deceleration
Select this pattern to accelerate/decelerate the motor rapidly to a high-speed region with an output frequency of 60Hz or more or to minimize the shocks applied during acceleration/deceleration. This pattern is suitable for pneumatic transport machines.

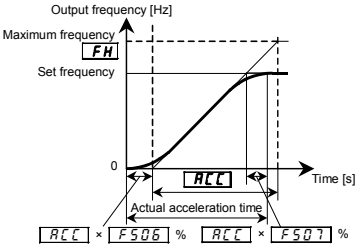

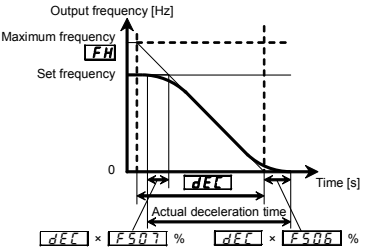

3) S-pattern 2 acceleration/deceleration

Select this pattern to obtain slow acceleration in a demagnetizing region with a small motor acceleration torque. This pattern is suitable for high-speed spindle operation.

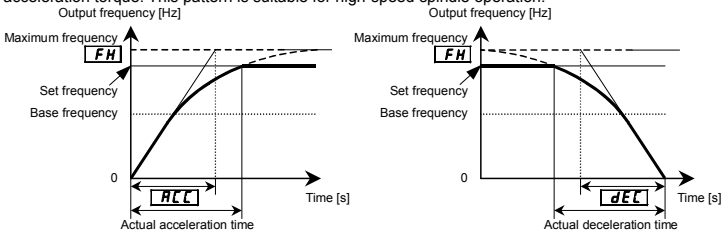

6.27.2 Switching of an acceleration/deceleration time 1, 2, 3

F500: Acceleration time 2

F501: Deceleration time 2

F503: Acceleration/deceleration 2 pattern

F504: Acceleration/deceleration selection (1,2,3) (panel keypad)

F505: Acceleration/deceleration 1 and 2 switching frequency

F510: Acceleration time 3

F511: Deceleration time 3

F512: Acceleration/deceleration 3 pattern

F513: Acceleration/deceleration 2 and 3 switching frequency

F519: Setting of acceleration/deceleration time unit

- Function
  Three different times for acceleration and deceleration can be specified individually. Choose from the following for the method of selection or switching:
  1) Selection by means of parameters
  2) Switching by changing frequencies
  3) Switching by means of terminals

Title	Function	Adjustment range	Default setting
F500	Acceleration time 2	0.0-3600 (0.00-360.0) [sec]	10.0
F501	Deceleration time 2	0.0-3600 (0.00-360.0) [sec]	10.0
F504	Acceleration/deceleration selection (1, 2 , 3) (Panel keypad)	1: Acceleration/deceleration 1 2: Acceleration/deceleration 2 3: Acceleration/deceleration 3	1
F510	Acceleration time 3	0.0-3600 (0.00-360.0) [sec]	10.0
F511	Deceleration time 3	0.0-3600 (0.00-360.0) [sec]	10.0
F519	Setting of acceleration/deceleration time unit	0: - 1: 0.01s unit (after execution: 0) 2: 0.1s unit (after execution: 0)	0

- Default setting is 0.1s unit. Acceleration/deceleration time unit can be changed to 0.01s unit by F519= 1 setting. (The value of F519 return to 0 after setting.)

1) Selection using parameters

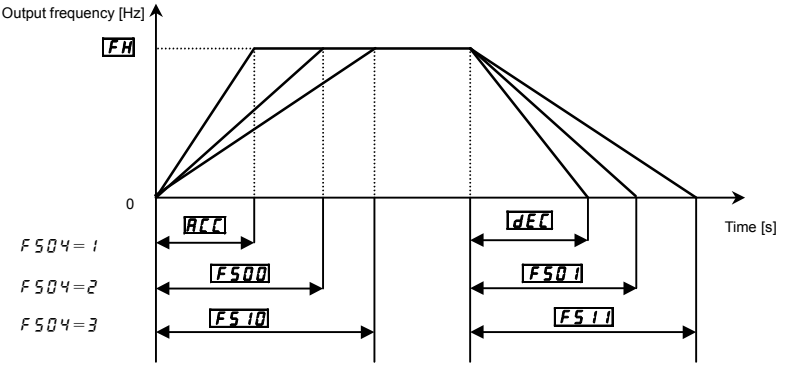

Acceleration/deceleration time 1 is initially set as the default. Acceleration/deceleration time 2 and 3 can be selected by changing the setting of the F504.
Enabled if CMOd= 1 (panel input enabled)

2) Switching by frequencies (Switching the acceleration/deceleration time automatically at the setting frequency)

Title	Function	Adjustment range	Default setting
F505	Acceleration/deceleration 1 and 2 switching frequency	0.0 (disabled) 0.1-UL (Hz)	0.0
F513	Acceleration/deceleration 2 and 3 switching frequency	0.0 (disabled) 0.1-UL (Hz)	0.0

Note: Acceleration/deceleration patterns are changed from pattern 1 to pattern 2 and from pattern 2 to pattern 3 in increasing order of frequency, regardless of the order in which frequencies are changed. (For example, if F505 is larger than F513, F513 pattern 1 is selected in the frequency range below the frequency set with F505.)

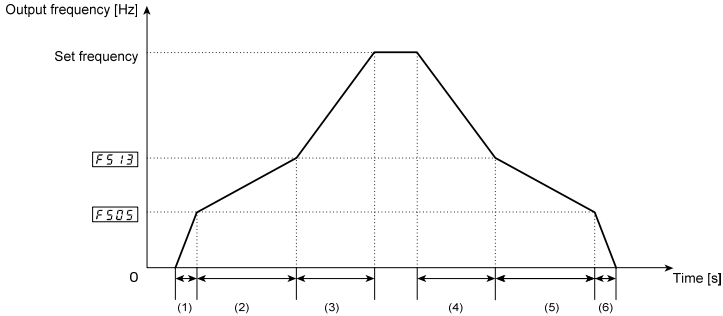

(1) Acceleration at the gradient corresponding to acceleration time ACC
(2) Acceleration at the gradient corresponding to acceleration time FS00
(3) Acceleration at the gradient corresponding to acceleration time FS10
(4) Deceleration at the gradient corresponding to deceleration time FS11
(5) Deceleration at the gradient corresponding to deceleration time FS01
(6) Deceleration at the gradient corresponding to deceleration time dEC

6

3) Switching using external terminals (Switching the acceleration/deceleration time via external terminals)

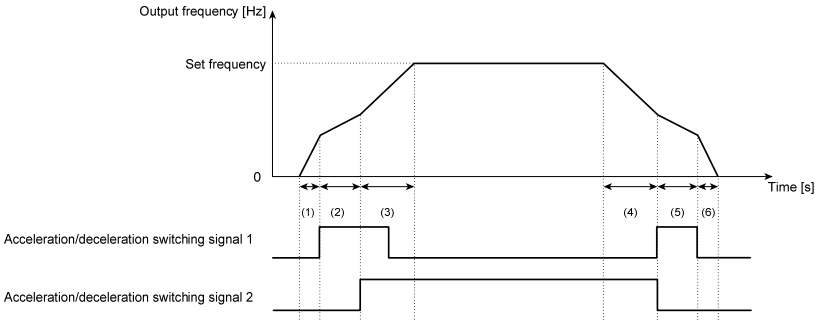

(1) Acceleration at the gradient corresponding to acceleration time ACC
(2) Acceleration at the gradient corresponding to acceleration time FS00
(3) Acceleration at the gradient corresponding to acceleration time FS10
(4) Deceleration at the gradient corresponding to deceleration time FS11
(5) Deceleration at the gradient corresponding to deceleration time FS01
(6) Deceleration at the gradient corresponding to deceleration time dEC

■ How to set parameters

a) Operating method: Terminal input
Set the operation control mode selection CMOd to 0.

b) Use the S2 and S3 terminals for switching. (Instead, other terminals may be used.)
S2: Acceleration/deceleration switching signal 1
S3: Acceleration/deceleration switching signal 2

Title	Function	Adjustment range	Setting value
F115	Input terminal selection 5 (S2)	0-203	24 (the second acceleration/deceleration mode selection)
F116	Input terminal selection 6 (S3)	0-203	26 (the third acceleration/deceleration mode selection)

■ Acceleration/ deceleration pattern

Acceleration/deceleration patterns can be selected individually, using the acceleration/deceleration 1, 2 and 3 parameters.

1) Linear acceleration/deceleration
2) S-pattern acceleration/deceleration 1
3) S-pattern acceleration/deceleration 2

Title	Function	Adjustment range	Setting value
F502	Acceleration/ deceleration 1 pattern	0: Linear 1: S-pattern 1 2: S-pattern 2	0
F503	Acceleration/ deceleration 2 pattern		0
F512	Acceleration/ deceleration 3 pattern		0

- For an explanation of acceleration/deceleration patterns, see 6.27.1.
- Both the settings of the S-pattern lower-limit and upper-limit adjustment parameters (F506 and F507) are applied to any acceleration/deceleration S-pattern.

6. 28 Shock monitoring function

F590: Shock monitoring

F591: Shock monitoring trip/ alarm selection

F592: Shock monitoring detection direction selection

F593: Shock monitoring detection level

F595: Shock monitoring detection time

F596: Shock monitoring detection hysteresis

F597: Shock monitoring detection start waiting time

F598: Shock monitoring detection action selection

⇒ Refer to “Shock monitoring function Instruction Manual: E6581875”.

6.29 Protection functions

6.29.1 Setting motor electronic thermal protection

tHr : Motor electronic-thermal protection level 1

F173 : Motor electronic-thermal protection level 2

F607 : Motor 150% overload detection time

F632 : Electronic-thermal memory

Refer to section 5.6.

6.29.2 Setting of stall prevention level

F601 : Stall prevention level 1

F185 : Stall prevention level 2

Caution	
Prohibited	• Do not set the stall prevention level (F601) extremely low. If the stall prevention level parameter (F601) is set at or below the no-load current of the motor, the stall preventive function will be always active and increase the frequency when it judges that regenerative braking is taking place. Do not set the stall prevention level parameter (F601) below 30% under normal use conditions.

- Function
  This parameter adjusts the output frequency by activating a current stall prevention function against a current exceeding the F601-specified level.

[Parameter setting]

Title	Function	Adjustment range	Default setting
F601	Stall prevention level 1	10-199 (%) / (A), 200: Disabled	150
F185	Stall prevention level 2		

[Display during operation of the stall prevention]

During an OC alarm status, (that is , when there is a current flow in excess of the stall prevention level), the output frequency changes. At the same time, to the left of this value, "C" is displayed flashing on and off.

Example of display

C 50

- The switching from F601 to F185 can be performed by entering a command through terminals. Refer to section 6.8.1 for details.

Note: The 100% standard value is the rated output current indicated on the nameplate.

6.29.3 Inverter trip retention

F602: Inverter trip retention selection

- Function
  If the inverter trips, this parameter will retain the corresponding trip information. Trip information that has thus been stored into memory can be displayed, even after power has been reset.

[Parameter setting]

Title	Function	Adjustment range	Default setting
F602	Inverter trip retention selection	0: Cleared with power off 1: Retained with power off	0

- The causes of up to eight trips that occurred in the past can be displayed in status monitor mode. (Refer to section 8.3)
- Data displayed in status monitor mode when the inverter is tripped is cleared when power is turned off. Check the details monitor for the history of past trips. (Refer to section 8.2.2)
- Trip records are retained even if power is turned off and turned back on during retry operation.

■ Flow of operation when F602=1

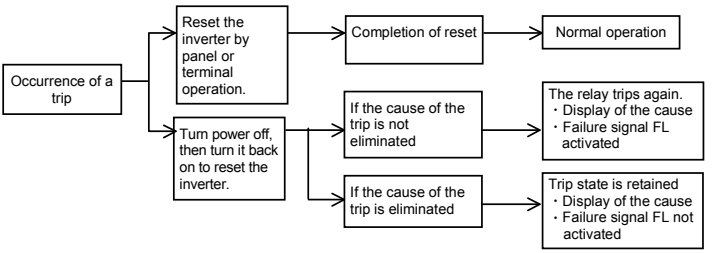

6.29.4 Emergency stop

F515: Deceleration time at emergency stop

F603: Emergency stop selection

F604: DC braking time during emergency stop

- Function
  Set the stop method for an emergency. When operation stops, a trip occurs (E displays) and failure signal FL operates.
  When F603 is set to 2 (Emergency DC braking), set F251 (DC braking amount) and F604 (DC braking time during emergency stop).
  When F603 is set to 3 (Deceleration stop), set F515 (Deceleration time at emergency stop).

1) Emergency stop from terminal

Emergency stop occurs at contact a or b. Follow the procedure below to assign a function to an input terminal and select a stop method.

[Parameter setting]

Title	Function	Adjustment range	Default setting
F515	Deceleration time at emergency stop	0.0-3600 (360.0) (s)	10.0
F603	Emergency stop selection	0: Coast stop 1: Deceleration stop 2: Emergency DC braking 3: Deceleration stop (F515) 4: Quick deceleration stop 5: Dynamic quick deceleration stop	0
F604	DC braking time during emergency stop	0.0-20.0 (s)	1.0
F251	DC braking current	0 - 100 (%)	50

Setting example) When assigning the emergency stop function to S2 terminal

Title	Function	Adjustment range	Setting
F114	Input terminal selection 4A (S1)	0 - 203	20: EXT (Emergency stop by external signal)

Setting value 21 is reverse signal.

Note 1) Emergency stopping via the specified terminal is possible, even during panel operation.

2) Emergency stop from the operation panel

Emergency stop from the operation panel is possible by pressing the STOP key on the panel twice while the inverter is not in the panel control mode.

(1) Press the STOP key ....."E0FF" will blink.

(2) Press the STOP key once again.....Operation will come to a trip stop in accordance with the setting of the F603 parameter.
After this, "E" will be displayed and a failure detection signal generated (FL relay is activated).

Note: While an emergency stop signal is input at a terminal, the trip cannot be reset. Clear the signal and then reset the trip.

6.29.5 Output phase failure detection

F605: Output phase failure detection selection

- Function
  This parameter detects inverter output phase failure. If the phase failure status persists for one second or more, trip occurs and the failure signal FL will be activated. Trip information EPH0 will be displayed.
  Set F605 to 5 to open the motor-inverter connection by switching commercial power operation to inverter operation.
  Detection errors may occur for special motors such as high-speed motors.

F605=0: No tripping. (Failure signal FL not activated)
F605= 1: With the power on, the output phase failure will be detected when the first operation starts. The inverter will trip if the phase failure status persists for one second or more. (Failure signal FL activated)
F605=2: The inverter checks for output phase failures every time the operation starts. The inverter will trip if the phase failure status persists for one second or more. (Failure signal FL activated)
F605=3: The inverter checks for output phase failures during operation. The inverter will trip if the phase failure status persists for one second or more. (Failure signal FL activated)
F605=4: The inverter checks for output phase failures at the start and during operation. The inverter will trip if the phase failure status persists for one second or more. (Failure signal FL activated)
F605=5: If the inverter detects an all-phase failure, it will restart on completion of reconnection. The inverter does not check for output phase failures when restarting after a momentary power failure. (Failure signal FL not activated)

[Parameter setting]

Title	Function	Adjustment range	Default setting
F605	Output phase failure detection selection	0: Disabled 1: At start-up (only one time after power on) 2: At start-up (each time) 3: During operation 4: At start-up + during operation 5: Detection of cutoff on output side	0

Note1) A check for output phase failures is made during auto-tuning, regardless of the setting of this parameter.
Note2) When parameter Pt=5 or 6 is selected, F605=3 to 5 do not work.

6.29.6 Input phase failure detection

F608: Input phase failure detection selection

- Function
  This parameter detects inverter input Phase failure. If the abnormal voltage status of main circuit capacitor persists for few minutes or more, the tripping function and the failure signal FL will be activated. Trip display is EPH1. Detection may not be possible when operating with a light load, or when the motor capacity is smaller than the inverter capacity.
  If the power capacity is larger than the inverter capacity (more than 500kVA or more than 10 times), detection errors may occur. If this actually happens, install an AC or DC reactor .

F608=0: No tripping. (Failure signal FL not activated)
F608= 1: Phase failure detection is enabled during operation. The inverter will trip if the abnormal voltage status of main circuit capacitor persists for few minutes or more. (Failure signal FL activated)

[Parameter setting]

Title	Function	Adjustment range	Default setting
F608	Input phase failure detection selection	0: Disabled 1: Enabled	1

6

Note1: Setting F608 to 0 (input phase failure detection: disabled) may result in a breakage of the capacitor in the inverter main circuit if operation is continued under a heavy load in spite of the occurrence of an input phase failure.
Note2: Parameter F608 is invalid for single-phase input model.
Note3: When operating the inverter with DC input, set F608=0 (none).

6.29.7 Control mode for small current

F609: Small current detection hysteresis
F610: Small current trip/alarm selection
F611: Small current detection current
F612: Small current detection time

- Function
  If the output current falls below the value set at F611 and doesn't return above F611+F609 for a time that exceeds the value set at F612, tripping or output alarm will be activated.
  UC is displayed in the event of a trip.

F610=0: No tripping. (Failure signal FL not activated)
A small current alarm can be put out from the output terminal.
F610= 1: The inverter will trip if a current below the current set with F611 flows for the period of time specified with F612. (Failure signal FL activated)

[Parameter setting]

Title	Function	Adjustment range	Default setting
F609	Small current detection hysteresis	1-20 (%)	10
F610	Small current trip/alarm selection	0: Alarm only 1: Tripping	0
F611	Small current detection current	0-150 (%) / (A)	0
F612	Small current detection time	0-255 (s)	0

<Example of operation>
Output terminal function: 26 (UC) Low current detection

F610 = 0 (Alarm only)

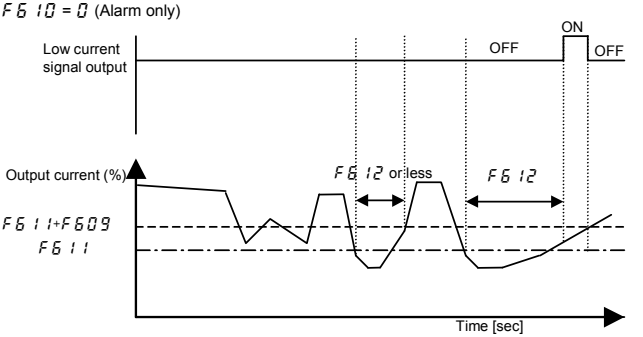

* When setting F610 to 1 (Trip), trip after low current is detected for the period of time set with F612. After tripping, the low current signal remains ON.

6.29.8 Detection of output short-circuit

F613: Detection of output short-circuit at start-up

- Function
  This parameter detects inverter output short-circuit. It can be usually detected in the length of the standard pulse. When operating low-impedance motor such as high-speed motor, however, select the short-time pulse.

F613=0: Detection is executed in the length of the standard pulse every time you start up the inverter.
F613=1: Detection is executed in the length of standard pulse only during the first start-up after putting on the power or after resetting.
F613=2: Detection is executed with the short-time pulse every time you start up the inverter.
F613=3: Detection is executed with the short-time pulse only for the first time after putting power on or after resetting.

[Parameter setting]

Title	Function	Adjustment range	Default setting
F613	Detection of output short-circuit at start-up	0: Each time (standard pulse) 1: Only one time after power on (standard pulse) 2: Each time (short pulse) 3: Only one time after power on (short pulse)	0

6

6.29.9 Ground fault detection function

F614: Ground fault detection selection

- Function
  This parameter detects inverter ground fault. If a ground fault occurs in the inverter unit or output side, the inverter will trip and the failure signal FL will be activated. EF2 is displayed in the event of a trip.

F614=0: No tripping. (Failure signal FL not activated)
F614=1: Ground fault detection is enabled. The inverter will trip if the ground fault is occurred. (Failure signal FL activated)

[Parameter setting]

Title	Function	Adjustment range	Default setting
F614	Ground fault detection selection	0: Disabled 1: Enabled	1

Note: When ground fault detection function sets to “Disabled”, installing of ground detector such as ground relay is recommended.

6.29.10 Over-torque trip

F615: Over-torque trip/alarm selection

F616: Over-torque detection level

F618: Over-torque detection time

F619: Over-torque detection hysteresis

- Function
  If the torque value exceeds the value set at F616 and doesn't return below F616-F619 for a time that exceeds the value set at F618, tripping or output alarm will be activated.
  OL is displayed in the event of a trip.

F615=0: No tripping. (Failure signal FL not activated)
An over-torque alarm can be put out by setting the output terminal function selection parameter.

F615= 1: The inverter trips when a torque exceeding the F616-specified level has been detected for longer than the F618-specified time. (Failure signal FL activated)

[Parameter setting]

Title	Function	Adjustment range	Default setting
F615	Over-torque trip/alarm selection	0: Alarm only 1: Tripping	0
F616	Over-torque detection level	0 (disabled), 1-250 (%)	150
F618	Over-torque detection time	0.0-10.0 (s) Note	0.5
F619	Over-torque detection hysteresis	0-100 (%)	10

Note 1) If F616 is set to 0(disabled), the alarm is not activated regardless of the F615 setting.
Note 2) F618= 0.0 seconds is the shortest time detected on control.

<Example of operation>

1) Output terminal function: 28 (OT) Over-torque detection

F615=0 (Alarm only)

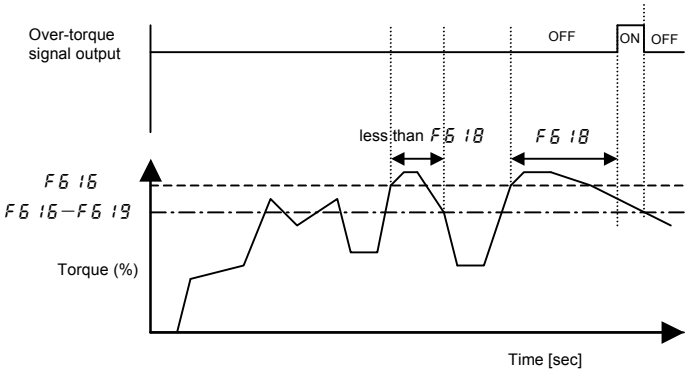

When F615 = 1 (tripping), the inverter will trip if over-torque lasts for the period of time set with F618. The over-torque signal remains ON.

6.29.11 Cooling fan control selection

F620: Cooling fan ON/OFF control

- Function
  Operate the cooling fan only when the ambient temperature is high or during operation. This function will extend the service life of the cooling fan than when it is always running while the power is ON.

F620=0: Cooling fan automatically controlled. Cooling fan operates only when the ambient temperature is high during operation.

F620= 1: Cooling fan not automatically controlled. The fan is always running when the inverter is on.

- If the ambient temperature is high, even when the inverter is stopped, the cooling fan automatically operates.

[Parameter setting]

Title	Function	Adjustment range	Default setting
F620	Cooling fan ON/OFF control	0: ON/OFF control 1: Always ON 2-7: -	0

6.29.12 Cumulative operation time alarm setting

F621: Cumulative operation time alarm setting

- Function
  Put out an alarm signal after a lapse of the cumulative operation time set with F621.

[Parameter setting]

Title	Function	Adjustment range	Default setting
F621	Cumulative operation time alarm setting	0.0-999.0 (100 hours)	876.0

- "0.1" displayed on the monitor refers to 10 hours, and therefore "1.0" denotes 100 hours.
  Ex.: 38.5 displayed on the monitor = 3850 (hours)
- Monitor display of cumulative operation time alarm.
  It can be confirmed in parts replacement alarm information of status monitor mode.
  An example of display: M 1 1 1 1
- Signal output of cumulative operation time alarm
  Assign the cumulative operation time alarm function to any output terminal.

6

Ex.: When assigning the cumulative operation alarm signal output function to the OUT terminal

Title	Function	Adjustment range	Setting
F131	Output terminal selection 2A (OUT)	0-255	56: COT (Cumulative operation time alarm)

Setting value 57 is reverse signal.

- The cumulative operation time until present time can be checked in status monitor mode.
  (Refer to chapter 8)
- The monitor value of cumulative operation time is reset to 0(zero) by setting tYP=5 (cumulative operation time clear).
  (Refer to section 4.3.2)

6.29.13 Undervoltage trip

F627: Undervoltage trip/alarm selection

- Function
  This parameter is used for selecting the control mode when an undervoltage is detected. Trip information is displayed as "UP 1".

F627=0: The inverter is stopped. However, it is not tripped (Failure signal FL not activated).
The inverter is stopped when the voltage does not exceed about 60 % of its rating.

F627= 1: Inverter is stopped. It is also tripped (Failure signal FL activated), only after detection of a voltage not exceeding about 60% of its rating.

F627=2: Inverter is stopped. However, it is not tripped (Failure signal FL not activated). The inverter stop (Failure signal FL not activated.), only after detection of a voltage not exceeding 50% of its rating. Be sure to connect the input AC or DC reactor specified in section 10.4.

[Parameter setting]

Title	Function	Adjustment range	Default setting
F627	Undervoltage trip/alarm selection	0: Alarm only (detection level 60% or less) 1: Tripping (detection level 60% or less) 2: Alarm only (detection level 50% or less, input AC or DC reactor required) 3: -	0

6.29.14 Analog input break detection

F633: Analog input break detection level (VIC)

F644: Operation selection of analog input break detection (VIC)

F649: Fallback frequency

- Function
  The inverter will trip if the VIC value remains below the specified value for about 0.3 seconds. In such a case, trip "E-18" and alarm "AL05" is displayed.

F633=0: Disabled....Not detected.
F633=1-100....The inverter will trip if the VIC input remains below the specified value for about 0.3 seconds.

[Parameter setting]

Title	Function	Adjustment range	Default setting
F633	Analog input break detection level (VIC)	0: Disabled 1-100%	0
F644	Operation selection of analog input break detection (VIC)	0: Tripping 1: Alarm only (Coast stop) 2: Alarm only (F649 frequency) 3: Alarm only (Maintain running) 4: Alarm only (Deceleration stop)	0
F649	Fallback frequency	LL-UL (Hz)	0.0

Note : The VIC input value may be judged earlier to be abnormal, depending on the degree of deviation of the analog data detected.

6.29.15 Parts replacement alarms

F634: Annual average ambient temperature (Parts replacement alarms)

- Function
  Calculate the remaining service life of the cooling fan, main circuit capacitor and on-block capacitor based on the cumulative power on time, cumulative operation time, cumulative fan operation time, the output current (inverter load factor) and the setting of F634. An alarm will be monitor displayed and sent out through output terminals when each component is approaching the time of replacement.

[Parameter setting]

Title	Function	Adjustment range	Default setting
F634	Annual average ambient temperature (parts replacement alarms)	1: -10 to +10°C 2: 11-20°C 3: 21-30°C 4: 31-40°C 5: 41-50°C 6: 51-60°C	3

● Display of part replacement alarm information
The time of replacement can be confirmed with the part replacement alarm information in the Status monitor mode. (Refer to chapter 8)
An example of display: A,,111

● Output of part replacement alarm signal
The parts replacement alarm is assigned to the output terminal.

Setup example) When the parts replacement alarm is assigned to the OUT terminal

Title	Function	Adjustment range	Setting
F131	Output terminal selection 2A (OUT)	0-255	128: LTA (Parts replacement alarm)

Setting value 129 is reverse signal.

Note 1: Using F634, enter the annual average temperature around the inverter. Be careful not to enter the annual highest temperature.

Note 2: Set F634 at the time of installation of the inverter, and do not change its setting after the start of use. Changing the setting may cause parts replacement alarm calculation error.

● The cumulative power on time, cumulative fan operation time and cumulative operation time until present time can be checked by setting status monitor mode. (Refer to chapter 8)

● The monitor value of cumulative fan operation time and cumulative operation time are reset to 0(zero) by parameter tYP (Refer to section 4.3.2) .

6.29.16 Motor PTC thermal protection

F147: Logic input / PTC input selection (S3)

F645: PTC thermal selection

F646: Resistor value for PTC detection

- Function
  This function is used to protect motor from overheating using the signal of PTC built-in motor.
  The trip display is "E-32".

[Parameter setting]

Title	Function	Adjustment range	Default setting
F147	Logic input / PTC input selection (S3)	0: Logic input 1: PTC input	0
F645	PTC thermal selection	1: Tripping 2: Alarm only	1
F646	PTC detection resistor value	100-9999 (Ω)	3000

Note : Protecting PTC thermal, set F147= 1 (PTC input) and slide switch SW2 to PTC side.
● Tripping level is defined by F646 setting. Alarm level is defined by 60% of F646 setting.
● Connect the PTC between S3 and CC terminals.
Detection temperature can be set by F646 setting.

[Connection]

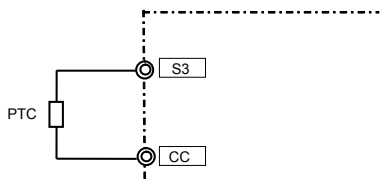

● Output of PTC input alarm signal
The PTC input alarm is assigned to the output terminal.

Setup example) When the PTC input alarm is assigned to the OUT terminal

Title	Function	Adjustment range	Setting
F131	Output terminal selection 2A (OUT)	0-255	150: PTCA (PTC input alarm signal)

Setting value 151 is reverse signal.

6.29.17 Number of starting alarm

F648: Number of starting alarm

- Function
  Counting the number of starting, when it will reach the value of parameter F648 setting, it will be displayed and alarm signal is output.

[Parameter setting]

Title	Function	Adjustment range	Default setting
F648	Number of starting alarm	0.0-999.0 (10000 times)	999.0

● "0.1" displayed on the monitor refers to 1000 times, and therefore "1.0" denotes 10000 times.
Ex.: 38.5 displayed on the monitor = 385000 (times)

● Display of number of starting alarm information
Number of starting alarm information in the Status monitor mode allows you to check on the time of replacement. (Refer to chapter 8)
An example of display: A 1 , , , ,

● Output of number of starting alarm signal
The number of starting alarm is assigned to the output terminal.

Setup example) When the number of starting alarm is assigned to the OUT terminal

Title	Function	Adjustment range	Setting
F131	Output terminal selection 2A (OUT)	0-255	162: NSA (Number of starting alarm)

Setting value 163 is reverse signal.

● The number of starting, forward number of starting and reverse number of starting until present time can be monitored by setting status monitor mode. (Refer to chapter 8)

● The monitor value of the number of starting, number of forward run and number of reverse run are reset to 0 (zero) by setting tYP= 12 (number of starting clear). (Refer to section 4.3.2)

6.30 Forced fire-speed control function

F650 : Forced fire-speed control selection

F294 : Preset-speed frequency 15

- Function

  With forced fire-speed control, operate the motor at the specified frequency in case of an emergency.
  Two kinds of operation are selectable by assignment of input terminal function.
  (1) Input terminal function 56 (FORCE) : Input signal is retained once signal is ON.
  Motor runs at the speed set by the parameter "F294".
  Motor is forced to operate in case of light failure.
  (2) Input terminal function 58 (FIRE) : Input signal is retained once signal is ON.
  Motor runs at the speed set by the parameter "F294".

  Note: In either case, power terminal should be off in order to stop.

[Parameter setting]

Title	Function	Adjustment range	Default setting
F650	Forced fire-speed control selection	0: Disabled 1: Enabled	0
F294	Preset-speed frequency 15	LL - UL (Hz)	0.0

[Setup example of input terminal]

When the terminal "RES" is assigned.

Title	Function	Adjustment range	Setting value
F113	Input terminal selection 3A (RES)	0 - 203	56 (Forced run operation) or 58 (Fire speed operation)

Each setting value 57, 59 are reverse signal.

● "F1rE" and output frequency are blinking during forced run operation and fire-speed operation.

6.31 Override

F205 : VIA input point 1 rate

F206 : VIA input point 2 rate

F214 : VIB input point 1 rate

F215 : VIB input point 2 rate

F220 : VIC input point 1 rate

F221 : VIC input point 2 rate

F660 : Override addition input selection

F661 : Override multiplication input selection

F729 : Operation panel override multiplication gain

• **Function**

These parameters are used to adjust reference frequencies by means of external input.

[Parameter setting]

Title	Function	Adjustment range	Default setting
F205	VIA input point 1 rate	0-250 (%)	0
F206	VIA input point 2 rate	0-250 (%)	100
F214	VIB input point 1 rate	-250-+250 (%)	0
F215	VIB input point 2 rate	-250-+250 (%)	100
F220	VIC input point 1 rate	0-250 (%)	0
F221	VIC input point 2 rate	0-250 (%)	100
F660	Override addition input selection	0: Disabled 1: Terminal VIA 2: Terminal VIB 3: Terminal VIC 4: FC	0
F661	Override multiplication input selection	0: Disabled 1: Terminal VIA 2: Terminal VIB 3: Terminal VIC 4: F729	0
F729	Operation panel override multiplication gain	-100-+100 (%)	0

The override functions calculate output frequency by the following expression:

$$\text{Frequency command value} \times \left(1+\frac{\text{Value [\%] selected with } F661}{100}\right)+\text{Value [Hz] selected with } F660$$

1) Additive override

In this mode, an externally input override frequency is added to operation frequency command.

[Ex.1: VIA (Reference frequency), VIC (Override input)] [Ex.2: VIB (Reference frequency), VIA (Override input)]

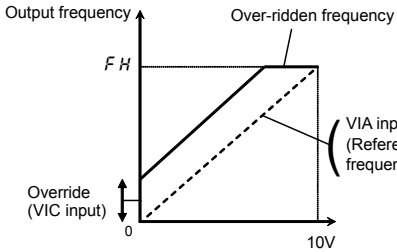

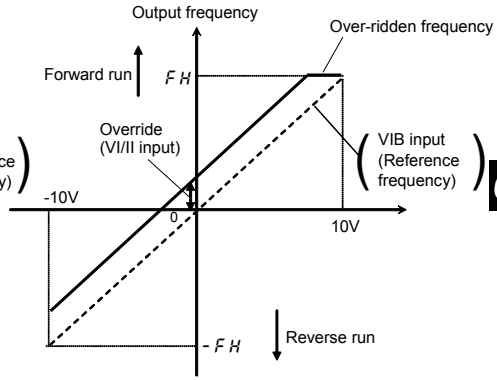

Ex.1:

F660=3 (VIC input), F661=0 (disabled)

Output frequency = Reference frequency + Override (VIC input [Hz])

Ex.2:

F660=1 (VIA input), F661=0 (disabled)

Output frequency = Reference frequency + Override (VIA input [Hz])

2) Multiplicative override

In this mode, each output frequency is multiplied by an externally override frequency.

[Ex.1: VIA (Reference frequency), VIC (Override input)] [Ex.2: VIB (Reference frequency), VIA (Override input)]

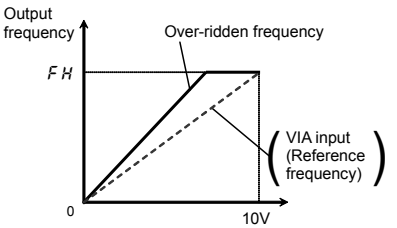

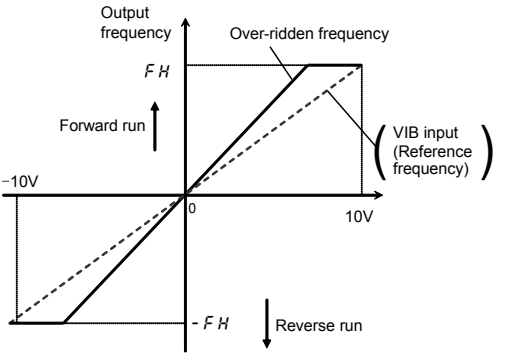

6

Ex.1:

F660=0 (Disabled), F661=3 (VIC input), FMOd=1(VIA input), FH=80.0, UL=80.0

VIA input, (F201=0, F202=0.0, F203=100, F204=80.0)

VIC input (F216=0, F220=0, F218=100, F221=100)

⇒ Setting of VIA input: Refer to Section 7.3.1, Setting of VIC input: Refer to Section 7.3.2.

Output frequency = Reference frequency × {1 + Override (VIC input [%]/100)}

Ex.2:

F660=0 (Disabled), F661=1 (VIA input), FMOd=2 (VIB input), FH=80.0, UL=80.0

VIB input (F210=0, F211=0.0, F212=100, F213=80.0)

VIA input (F201=0, F205=0, F203=100, F206=100)

⇒ Setting of VIB input: Refer to Section 7.3.3, Setting of VIA input: Refer to Section 7.3.1.

Output frequency = Reference frequency × {1 + Override (VIA input [%]/100)}

Ex.3:

Title	Function	Adjustment range	Default setting
F729	Operation panel override multiplication gain	-100- +100%	0

Output frequency = Reference frequency × {1 + Override (F729 setting value [%]/100)}

6.32 Analog input terminal function selection

F214 : VIB input point 1 rate

F215 : VIB input point 2 rate

F663 : Analog input terminal function selection (VIB)

- Function
  Parameter is normally set from operation panel. However some parameters can be continuously set from external analog input by using this function. VIB terminal is used.

[Parameter setting]

Title	Function	Adjustment range	Default setting
F214	VIB input point 1 rate	-250-+250 (%)	0
F215	VIB input point 2 rate	-250-+250 (%)	100
F663	Analog input terminal function selection (VIB)	0: Frequency command 1: Acceleration/deceleration time 2: Upper limit frequency 3, 4: - 5: Torque boost value 6: Stall prevention level 7: Motor electronic-thermal protection level 8 to 10: - 11: Base frequency voltage	0

6

- Analog input terminal function assigns VIB terminal. The range of analog input voltage is 0% to +100%. From -100% to 0% cannot be used.
- The parameter that is selected by F663 can be adjusted range as following table.

Setting of F663	Object parameter	VIB : 0% input	VIB : 100% input
0: Frequency command	-	-	-
1: Acceleration/ deceleration time	ACC, dEC, F500, F501, F510, F511	Parameter setting value x F214	Parameter setting value x F215
2: Upper limit frequency	UL	Parameter setting value x F214	Parameter setting value x F215
5: Torque boost value	ub, F172	Parameter setting value x F214	Parameter setting value x F215
6: Stall prevention level	F185, F601	Parameter setting value x F214	Parameter setting value x F215
7: Motor electronic-thermal protection level	tHr, F173	Parameter setting value x F214	Parameter setting value x F215
11: Base frequency voltage	uLu, F171	Parameter setting value x F214	Parameter setting value x F215

Note: Adjustments are made by the inverter itself, so no changes are made to parameter settings

6.33 Adjustment parameters

6.33.1 Inputting integral input power pulse

F667: **Integral input power pulse output unit**
F668 : **Integral input power pulse output width**

- Function
  Pulse signal can be output each time integral input power reaches integral power unit that is set by F667.
  Pulse output width is set by F668.

[Parameter setting]

Title	Function	Adjustment range	Default setting
F667	Integral input power pulse output unit	0: 0.1kWh 1: 1kWh 2: 10kWh 3: 100kWh	1
F668	Integral input power pulse output width	0.1-1.0 (s)	0.1

6

Setting example) When integral input power pulse is output from output terminal

Title	Function	Adjustment range	Setting
F131	Output terminal selection 2A	0 - 255	180: IPU (Integral input power pulse output signal)

There is no reverse signal.

6.33.2 Pulse train output for meters

F669: Logic output/pulse train output selection (OUT)
F676: Pulse train output function selection (OUT)
F677: Maximum numbers of pulse train output
F678: Pulse train output filter

- Function
  Pulse trains can be sent out through the OUT output terminals.
  Set a pulse output mode and the number of pulses.

Ex.: When operations frequencies (0 to 60Hz) are put out by means of 0 to 600 pulses
FH=60.0, F669=1, F676=0, F677=0.60

[Parameter setting]

Title	Function	Adjustment range	Reference of maximum value of F677	Default setting
F669	Logic output/pulse train output selection (OUT)	0: Logic output 1: Pulse train output	–	0
F676	Pulse train output function selection (OUT)	0: Output frequency 1: Output current 2: Frequency command value 3: Input voltage (DC detection) 4: Output voltage (command value) 5: Input power 6: Output power 7: Torque 8: - 9: Motor cumulative load factor 10: Inverter cumulative load factor 11: PBR (Braking resistor) cumulative load factor 12:Stator frequency 13:VIA input value 14:VIB input value 15:Fixed output 1 (output current 100% equivalent) 16:Fixed output 2 (output current 50% equivalent) 17:Fixed output 3 (Other than the output current) 18:Communication data 19: - 20: VIC input value 21, 22: - 23: PID feedback value	FH 185% FH 150% 150% 185% 185% 250% - 100% 100% 100% FH 10 V 10 V 185% 185% 100% 100.0% - 20mA - 100%	0
F677	Maximum numbers of pulse train output	0.50-2.00 (kpps)	–	0.80
F678	Pulse train output filter	2-1000 (ms)	–	64

- Digital panel meter for reference
  Type: K3MA-F (OMRON)
  Connection terminal: OUT-E4, NO-E5

Note 1: When item of F676 reaches “Reference of max. value”, the number of pulse train set by F677 are sent to output terminals (OUT)

Note 2: The ON pulse width is maintained constant.
The ON pulse width is fixed at a width that causes the duty to reach 50% at the maximum pulse number set with F677.
Therefore, the duty is variable.
For example, the ON pulse width is approximately 0.6 ms when F677= 0.80 (pps)
approximately 0.5 ms when F677= 1.00 (pps)
approximately 0.3 ms when F677= 1.60 (pps)

Note 3: The minimum pulse output rate is 10pps. Keep in mind that no pulses can be put out at any rate smaller than this.

Note 4: F676 = 12 is the motor drive frequency.

6.33.3 Calibration of analog output

F681: Analog output signal selection

F684: Analog output filter

F691: Inclination characteristic of analog output

F692: Analog output bias

- Function
  Output signal from the FM terminal can be switched between 0 to 1mAdc output, 0 to 20mAdc output, and 0 to 10Vdc output with the F681 setting. The standard setting is 0 to 1mAdc output.

* Optional frequency meter: When using QS60T, set F681=0 (meter option (0 to 1mA) output).

[Parameter setting]

Title	Function	Adjustment range	Default setting
F681	Analog output signal selection	0: Meter option (0 to 1mA) 1: Current (0 to 20mA) output 2: Voltage (0 to 10V) output	0
F684	Analog output filter	2-1000 (ms)	2
F691	Inclination characteristic of analog output	0: Negative inclination (downward slope) 1: Positive inclination (upward slope)	1
F692	Analog output bias	-1.0 - +100.0 (%)	0.0

Note 1: In case of 0 to 20mAdc (4 to 20mAdc) output, or 0 to 10Vdc output, set F681 to 1 or 2.
In case of 4 to 20mAdc output, F692 needs adjustment.

■ Example of setting

F68 1=1, F69 1=1, F692=0(%)

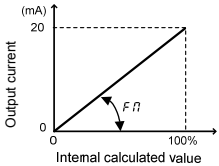

F68 1=1, F69 1=1, F692=20(%)

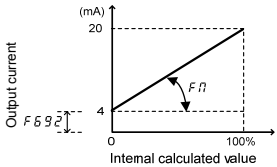

F68 1=1, F69 1=0, F692=100(%)

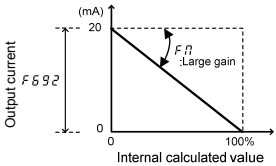

F68 1=1, 69 1=0, F692=100(%)

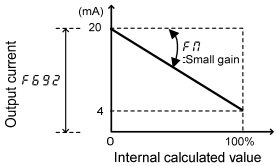

● The analog output inclination can be adjusted using the parameter F8.
Refer to section 5.1 about how to adjustment.

6

6.34 Operation panel parameter

6.34.1 Prohibition of key operations and parameter settings

F700: Parameter protection selection

F730: Panel frequency setting prohibition (FC)

F731: Disconnection detection of extension panel

F732: Local/remote key prohibition of extension panel

F733: Panel operation prohibition (RUN key)

F734: Panel emergency stop operation prohibition

F735: Panel reset operation prohibition

F736: CMOd/FMOd change prohibition during operation

F737: All key operation prohibition

F738: Password setting (F700)

F739: Password verification

- Function
  These parameters allow you to prohibit or allow operation of the RUN and STOP keys on the operation panel and the change of parameters. Using these parameters, you can also prohibit various key operations. Lock parameters with a password to prevent configuration.

[Parameter setting]

Title	Function	Adjustment range	Default setting
F700	Parameter protection selection	0: Permitted 1: Writing prohibited (Panel and extension panel) 2: Writing prohibited (1 + RS485 communication) 3: Reading prohibited (Panel and extension panel) 4: Reading prohibited (3 + RS485 communication)	0
F730	Panel frequency setting prohibition (FC)	0: Permitted, 1: Prohibited	0
F731	Disconnection detection of extension panel	0: Permitted, 1: Prohibited	0
F732	Local/remote key prohibition of extension panel	0: Permitted, 1: Prohibited	1
F733	Panel operation prohibition (RUN key)	0: Permitted, 1: Prohibited	0

Title	Function	Adjustment range	Default setting
F734	Panel emergency stop operation prohibition	0: Permitted, 1: Prohibited	0
F735	Panel reset operation prohibition	0: Permitted, 1: Prohibited	0
F736	CMOd / FMOd change prohibition during operation	0: Permitted, 1: Prohibited	1
F737	All key operation prohibition	0: Permitted, 1: Prohibited	0
F738	Password setting (F700)	0: Password unset 1-9998 9999: Password set	0
F739	Password verification	0: Password unset 1-9998 9999: Password set	0

● Parameters can be edited regardless of the setting of F700 by assigning the parameter editing permission (function number 110, 111) to an input terminal.

Note1: F700=2 and 4 will be available after reset operation.

Note 2: For the setting of F737 to take effect, the inverter needs to be turned off and turned back on after the setting.

Note 3: The following changing value by setting dial like FC cannot be prohibited by F700.

- FP Id (F389=3)
- Preset speed frequency (F724= 1)

Set F730= 1 to prohibit the change of these values.

6

1) Setup and resetting method when protection using a password is necessary

■ Password setup method

Preparation: Parameters other than F700, F738, and F739 cannot be changed when F700 is set to 1 to 4.

(1) When F738 or F739 is read out and the value is 0, a password hasn't been set. You can set a password.

(2) When F738 or F739 is read out and the value is 9999, a password has already been set.

(3) You can set a password If it hasn't been set. Select and register a number from 1 to 9998 for F738. The number is the password. Do not forget your password as it is required to release the lock.

(4) The settings for parameter F700 cannot be changed.

Note4: The lock cannot be released If you forget the password. Do not forget this password as we cannot retrieve it.

Note5: Password cannot be set when parameter F700=0. Set the password after parameter F700= 1 to 4.

Note6: Password can be read out to parameter writer (optional device) only for 5 minutes after setting F738. Please note that password will not be able to read out due to password protection after 5 minutes have elapsed or when the power is off.

■ Password examination method

(1) When F738 or F739 are read out and the value is 9999, a password has already been set. Password has to be removed in order to change parameters.

(2) Enter a the number (1 to 9998) registered to F739 when the password was set for F738.

(3) If the password matches, PASS blinks on the display and the password is removed.
(4) If the password is incorrect, FAIL blinks on the display and F739 is displayed again.
(5) When the password is removed, the setting for parameter F700 can be changed.
(6) By setting parameter F700=0, the all parameter settings can be changed.
Note7: Entry of F739 setting is possible up to 3 times. Please note it is impossible to set, if you enter the wrong number for 3 times. Number of times is reset after power is off.

2) Resetting method of prohibition settings: F700 and F737

■ Resetting method

(1) Canceling the F700 prohibition setting
The setting of only parameter F700 can be changed at any time, even if it is set to 1.
(2) Canceling he F737 prohibition setting
When this parameter is set to 1 (key operation prohibited), press and hold down the ENT key for 5 seconds or more. The message Undo appears and this setting is canceled temporarily to enable key operation. To cancel this setting permanently, change the setting of F737 directly

3) Setup method when parameter protection is necessary

■ Prohibit changing parameters settings and reading parameters from logic input

Set "Parameter editing prohibition" or "Parameter reading/editing prohibition" for an input terminal.
Activating the "Parameter editing prohibited" function prevents changes to parameters.
Activating the "Parameter reading/editing prohibition" function prevents reads and writes to parameters.
The following table shows an example of setting input terminal S1 and S2.

Title	Function	Adjustment range	Setting
F114	Input terminal selection 4A (S1)	0-203	200: PWP (Parameter editing prohibition)
F115	Input terminal selection 5 (S2)	0-203	202: PRWP (Parameter reading prohibition)

Setting value 201, 203 are reverse signal.

6.34.2 Change the unit (A/V) from a percentage of current and voltage

F701:Current/voltage unit selection

⇒ Refer to section 5.10.1.

6.34.3 Display the motor or the line speed

F702: Frequency free unit display magnification

F703: Frequency free unit coverage selection

F705: Inclination characteristic of free unit display

F706: Free unit display bias

⇒ Refer to section 5.10.2.

6.34.4 Change the steps in which the value increment

F707: Free step 1 (1-step rotation of setting dial)

F708: Free step 2 (panel display)

- Function
  Changeable step width can be changed at panel frequency setting.
  This function is useful when only running with frequencies of intervals of 1 Hz, 5 Hz, and 10 Hz units.

Note 1: The settings of these parameters don't work when the free unit selection (F702) is enabled.
Note 2: In case setting other than 0 to F707 and increasing frequency by turning the setting dial to the right, frequency will not be increased beyond this point with the H1 alarm when the frequency exceeds UL (Upper limit frequency) with just one more step rotation.
Similarly, when decreasing the frequency by turning the setting dial to the left and if the frequency falls below LL (lower limit frequency) with just one more step rotation, the L0 alarm is displayed in advance and the frequency cannot be lowered beyond this point.

■ When F707 is not 0.00, and F708 = 0 (disabled)

Under normal conditions, the frequency command value from the operation panel increases by 0.1 Hz when you turn the setting dial to the right. If F707 is not 0.00, the frequency command value will increase by the value with F707 each time you turn the setting dial to the right by 1 step. Similarly, the frequency command value from the operation panel will decrease by the value set with F707 when you turn the setting dial to the left by 1 step.

■ When F707 is not 0.00, and F708 is not 0

The value displayed on the panel also can also be changed in steps.

$$\boxed{\text{Output frequency displayed in standard monitor mode}} = \boxed{\text{Internal output frequency}} \times \frac{F708}{F707}$$

[Parameter setting]

Title	Function	Adjustment range	Default setting
F707	Free step 1 (1-step rotation of setting dial)	0.00: Automatic 0.01-FH (Hz)	0.00
F708	Free step 2 (panel display)	0: Automatic 1-255	0

■ Operation example 1

F707 = 0.00 (disabled)

By rotating the setting dial 1 step, the panel frequency command value changes only 0.1 Hz.

When F707 = 10.00 (Hz) is set

Rotating the setting dial 1 step changes the panel frequency command value in 10.00 Hz increments, from 0.00 up to 60.00 (Hz).

■ Operation example 2

When F707=1.00 (Hz), and F708=1:

By rotating the setting dial 1 step, the frequency setting FC changes in steps of 1Hz: 0→ 1 → 2 → ... → 60 (Hz) and also the value displayed on the operation panel changes in steps of 1. Use these settings to hide decimal fractions and also the value displayed on the operation panel changes in steps of 1. Use these settings to hide decimal fractions.

6

6.34.5 Select the initial display of the panel

F710: Initial panel display selection

F720: Initial extension panel display selection

- Function
  This parameter specifies display format of the standard monitor mode when power is ON. Different contents can be displayed on the operation panel of main unit and the extension panel (option).

■ Changing the display format while power is ON

When the power is ON, the standard monitor mode displays the output frequency (default setting) such as "0.0" or "OFF". This format can be changed to any other monitor display format by setting F710. However, the initial letter including t or C will not be displayed. When the power is ON, set the display of the extension panel at F720.

- Different contents can be displayed on the operation panel of main unit and the extension panel (option).

[Parameter setting]

Title	Function	Adjustment range	Default setting
F710	Initial panel display selection	0: Output frequency (Hz/free unit) 1: Output current (%/A) 2: Frequency command value (Hz/free unit) 3: Input voltage (DC detection) (%/V) 4: Output voltage (command value) (%/V) 5: Input power (kW) 6: Output power (kW) 7: Torque (%) 8: - 9: Motor cumulative load factor 10: Inverter cumulative load factor 11: PBR (Braking resistor) cumulative load factor 12: Stator frequency (Hz/free unit) 13: VIA input value (%) 14: VIB input value (%) 15 to 17: - 18: Arbitrary code from communication 19: - 20: VIC input value (%) 21: Pulse train input value (pps) 22: - 23: PID feedback value (Hz/free unit) 24: Integral Input power (kWh) 25: Integral Output power (kWh) 26: Motor load factor (%) 27: Inverter load factor (%) 28: Inverter rated current (A) 29: FM output value (%) 30: Pulse train output value (pps) 31: Cumulative power on time (100 hours) 32: Cumulative fan operation time (100 hours) 33: Cumulative operation time (100 hours) 34: Number of starting (10000 times) 35: Forward number of starting (10000 times) 36: Reverse number of starting (10000 times) 37: Number of trip (times) 38, 39: - 40: Inverter rated current (Carrier frequency corrected) 41 to 51: - 52: Frequency command value / output frequency (Hz/free unit)	0
F720	Initial extension panel display selection		0

- For details on F710 / F720= 18, see “Communication Function Instruction Manual : E6581913”.

Note: If F720= 18 setting, fixed value is displayed.

6

6.34.6 Change display of the status monitor

F711 to F718: Status monitor 1 to 8

Change monitor display items in the status monitor mode.
⇒ Refer to chapter 8 for details.

6.34.7 Change the status monitor condition

F709: Standard monitor hold function

F746: Status monitor filter

- Function
  The standard monitor display can be hold.
  Some status monitors can be filtered to display.

- If F709 is set to 0, the monitored values selected with F710 (standard monitor display selection parameter) are displayed. For peak hold values and minimum hold values, the minimum values in each operation cycle are displayed. When the motor is at a standstill, the values monitored last are held as they were until the motor is started the next time.
  The maximum and minimum values monitored after power is turned on is always displayed no matter whether the motor is in operation or at a standstill.
  The maximum and minimum values are cleared to press the EASY key by setting F750 to 3.
- "Output current", "Input voltage", "Output voltage" and "Torque" can be filtered by F746.

⇒ Refer to chapter 8 about status monitor.

[Parameter setting]

Title	Function	Adjustment range	Default setting
F709	Standard monitor hold function	0: Real time 1: Peak hold 2: Minimum hold	0
F746	Status monitor filter	8-1000 (ms)	200
F750	EASY key function selection	0: Easy / standard setting mode switching function 1: Shortcut key 2: Local / remote key 3: Monitor peak / minimum hold trigger 4: - 5: -	0

6.34.8 Cancel the operation command

F719: Selection of operation command clear

- Function
  This parameter allows you to select operation command retained or operation command canceled, when coast stop occurs due to standby terminal function (ST) or coast stop command terminal function, and when under voltage in main circuit alarm occurs, during panel operation or RS485 communication operation.

Parameter setting	At coast stop	Under voltage in main circuit alarm (nOFF) occurrence	CONd is changed
F719=0	Operation command canceled	Operation command retained	
F719=1	Operation command retained		
F719=2	Operation command canceled		Operation command retained
F719=3	Operation command canceled		

Operation command retained :
Inverter restarts due to canceling coast stop at coast stop.
Inverter restarts due to supply power source again when the under voltage in main circuit alarm (nOFF) occurs.

Operation command canceled :
Inverter doesn't restart after coast stop or occurring the under voltage in main circuit alarm (nOFF).
Press RUN key to operate again in panel operation.
Switch to ON the operation command in RS485 communication operation.

Title	Function	Adjustment range	Default setting
F719	Selection of operation command clear	0: Clear at coast stop and retained at nOFF. 1: Retained at coast stop and nOFF. 2: Clear at coast stop and nOFF. 3: 2+ clear when CNOd is changed	1

[Setup example of input terminal]
When it is assigned to the RES terminal.

Title	Function	Adjustment range	Setting
F113	Input terminal selection 3A (RES)	0-203	6: ST (Standby)
F113	Input terminal selection 3A (RES)	0-203	96: FRR (Coast stop command)

Setting value 7, 97 are reverse signal.

6.34.9 Select the operation panel stop pattern

F721: Selection of operation panel stop pattern

- Function

  This parameter are used to select a panel stop pattern in which the motor started by pressing the RUN STOP key on the operation panel.

1) Deceleration stop

   The motor slows down to a stop in the deceleration time set with dEC (or F501 or F511).

2) Coast stop

   The inverter cuts off power supply to the motor. The motor comes to a stop after coasting for a while. Depending on the load, the motor may keep running for a longer time.

[Parameter setting]

Title	Function	Adjustment range	Default setting
F721	Panel stop pattern	0: Deceleration stop 1: Coast stop	0

6.34.10 Select the panel display at power on

F790: Panel display selection at power on

F791: 1st and 2nd characters of F790

F792: 3rd and 4th characters of F790

F793: 5th and 6th characters of F790

F794: 7th and 8th characters of F790

- Function
  These parameters allow you to change the characters on panel display at power on.
  Default setting is "HELLO".

[Parameter setting]

Title	Function	Adjustment range	Default setting
F790	Panel display selection at power on	0: HELLO 1: F791 to F794 2, 3: -	0
F791	1st and 2nd characters of F790	0-FFFF	2d2d
F792	3rd and 4th characters of F790	0-FFFF	2d2d
F793	5th and 6th characters of F790	0-FFFF	2d2d
F794	7th and 8th characters of F790	0-FFFF	2d2d

Select F790=1 and set displayed characters with F791 to F794 if it is displayed characters other than "HELLO".

Refer to "ASCII LED " of "Communication Function Instruction Manual : E6581913" about setting characters and set by hex number.

6.35 Tracing functions

F740 : Trace selection

F741 : Trace cycle

F742 : Trace data 1

F743 : Trace data 2

F744 : Trace data 3

F745 : Trace data 4

⇒ For details, refer to ”Trace Function Instruction Manual : E6581922”.

6.36 Integrating wattmeter

F748 : Integrating wattmeter retention selection

F749 : Integrating wattmeter display unit selection

6

• Function

At the main power off, display unit of integral output power values and whether or not retain integral output power values are selectable.

The integrating wattmeter display can be cleared by the signal to the input terminal.

Input terminal function 74, 75 (Integrating wattmeter display clear)

Title	Function	Adjustment range	Default setting
F748	Integrating wattmeter retention selection	0: Disabled 1: Enabled	0
F749	Integrating wattmeter display unit selection	0:1=1kWh 1:1=10kWh 2:1=100kWh 3:1=1000kWh 4:1=10000kWh	Depends on the capacity (Refer to section 11.4)

6.37 Parameter registration to easy setting mode

F750: EASY key function selection

F751 to F782: Easy setting mode parameter 1 to 32

Up to 32 arbitrary parameters can be registered to easy setting mode.

⇒ Refer to section 4.5 for details.

6.38 Communication function

6.38.1 Setting of communication function

F800: Baud rate
F801: Parity
F802: Inverter number
F803: Communication time-out time
F804: Communication time-out action
F805: Communication waiting time
F806: Setting of master and slave for communication between inverters
F808: Communication time-out detection condition
F810: Communication command point selection
F811: Communication command point 1 setting
F812: Communication command point 1 frequency
F813: Communication command point 2 setting
F814: Communication command point 2 frequency
F829: Selection of communication protocol
F856: Number of motor poles for communication
F870: Block write data 1
F871: Block write data 2
F875: Block read data 1
F876: Block read data 2
F877: Block read data 3
F878: Block read data 4
F879: Block read data 5
F899: Communication function reset

⚠ Warning	
Mandatory action	• Set the parameter Communication time-out time (F803) , Communication time-out action (F804) and Disconnection detection of extension panel (F731). If these are not properly set, the inverter cannot be stopped immediately in breaking communication and this could result in injury and accidents. • An emergency stop device and the interlock that fit with system specifications must be installed. If these are not properly installed, the inverter cannot be stopped immediately and this could result in injury and accidents.

Refer to “Communication Function Instruction Manual : E6581913” for details.

- Function
  2-wire RS485 communication is built-in as standard.
  Connect with the host to create a network for transmitting data between multiple inverters. A computer link function and Inverter-to-inverter communication function are available.
  <Computer-linking functions>
  The following functions are enabled by data communication between the computer and inverter
  (1) Monitoring inverter status (such as the output frequency, current, and voltage)
  (2) Sending RUN, STOP and other control commands to the inverter
  (3) Reading, editing and writing inverter parameter settings
  < Inverter-to-inverter communication function >
  This function allows you to set up a network that makes it possible to carry out proportional operation of multiple inverters (without using a computer).
- Timer function …Function used to detect cable interruptions during communication. When data is not sent even once to the inverter during a user-defined period of time, an inverter trip (Err5 is displayed on the panel) or an output terminal alarm("t" is displayed) can be output.
- Broadcast communication function …Function used to send a command (data write) to multiple inverters with a single communication.
- Peer-to-peer communication function …Refers to the function that enables the master inverter to send the data selected with a parameter to all slave inverters on the same network. This function allows you to set up a network that makes it possible to carry out synchronized operation or proportional operation (setting of point frequencies) in an abbreviated manner.
- Communication protocol …Toshiba inverter protocol and Modbus RTU protocol are supported.

6

- 2-wire RS485 communication options are as follows.
  (1) USB communication conversion unit (Type: USB001Z)
  Cable for communication between the inverter and the unit (Type: CAB0011 (1m), CAB0013 (3m), CAB0015 (5m))
  Cable for communication between the unit and computer: Use a commercially available USB 1.1 or 2.0 cables. (Type: A-B, Cable length: 0.25 to 1.5m)
  (2) Parameter writer (Type: RKP002Z)
  Communication cable (Type: CAB0011 (1m), CAB0013 (3m), CAB0015 (5m))
  (3) Parameter writer (Type: PWU003Z)
  RJ45 cable (1m) is attached.
  (4) Extension panel (Type: RKP007Z)
  Communication cable (Type: CAB0071 (1m), CAB0073 (3m), CAB0075 (5m))

Note1) In case of using above options, set the parameter F805=0.00

■ Settings for run/stop via communication

Title	Function	Adjustment range	Standard defaults	Setting example
CMOd	Command mode selection	0 - 4	1 (Panel keypad)	2 (RS485 communications)

■ Settings for speed command via communication

Title	Function	Adjustment range	Standard defaults	Setting example
FMOd	Frequency setting mode selection	0 - 14	0 (Setting dial 1)	4 (RS485 communications)

■ Communication function parameters (2-wire RS485 communication)

Communication speed, parity, inverter number, and communication error trip time settings can be changed via panel operations or communication.

[Parameter setting]

Title	Function	Adjustment range	Default setting
F800	Baud rate	3: 9600bps 4: 19200bps 5: 38400bps	4
F801	Parity	0: No parity 1: Even parity 2: Odd parity	1
F802	Inverter number	0-247	0
F803	Communication time-out time *1	0: Disabled 0.1-100.0 (s)	0.0
F804	Communication time-out action *1	0: Alarm only 1: Trip (Coast stop) 2: Trip (Deceleration stop)	0
F805	Communication waiting time	0.00-2.00	0.00
F806	Setting of master and slave for communication between inverters	0: Slave (0 Hz command issued in case the master inverter fails) 1: Slave (Operation continued in case the master inverter fails) 2: Slave (Emergency stop tripping in case the master inverter fails) 3: Master (transmission of frequency commands) 4: Master (transmission of output frequency signals)	0
F808	Communication time-out detection condition	0: Valid at any time 1: Communication selection of FMOd or CMOd 2: 1 + during operation	1
F810	Communication command point selection	0: Disabled 1: Enabled	0
F811	Communication command point 1 setting	0-100	0
F812	Communication command point 1 frequency	0.0-FH	0
F813	Communication command point 2 setting	0-100	100
F814	Communication command point 2 frequency	0.0-FH	*2
F829	Selection of communication protocol	0: Toshiba inverter protocol 1: Modbus RTU protocol	0

6

Title	Function	Adjustment range	Default setting
F856	Number of motor poles for communication	1: 2 poles 2: 4 poles 3: 6 poles 4: 8 poles 5: 10 poles 6: 12 poles 7: 14 poles 8: 16 poles	2
F870	Block write data 1	0: No selection 1: Communication command 1 2: Communication command 2 3: Frequency command value 4: Output data on the terminal block 5: FM analog output 6: Motor speed command	0
F871	Block write data 2		0
F875	Block read data 1	0: No selection 1: Status information 1 2: Output frequency 3: Output current 4: Output voltage 5: Alarm information 6: PID feedback value 7: Input terminal monitor 8: Output terminal monitor 9: Terminal VIA monitor 10: Terminal VIB monitor 11: Terminal VIC monitor 12: Input voltage (DC detection) 13: Motor speed 14: Torque	0
F876	Block read data 2		0
F877	Block read data 3		0
F878	Block read data 4		0
F879	Block read data 5		0
F899	Communication function reset	0: - 1: Reset (after execution: 0)	0

*1:Disabled..... Indicates that the inverter will not be tripped even if a communication error occurs.
Trip..... The inverter trips when a communication time-over occurs.
In this case a trip information Err5 flashes on and off on the operation panel.
Alarm ..... When a communication time-over occurs, an alarm can be output from the output terminal.
Output terminal function: 78 (RS485 communication error) or 79 (RS485 communication error reverse)

*2: Default setting values vary depending on the setup menu setting. Refer to section 11.5.

Note2) Changes to the parameters F800, F801 and F806 do not take effect until the power is turned off and then on again.

6.38.2 Using RS485

■ Communication function settings

Commands and frequency settings are given priority by communication. (Prioritized by commands from the panel or terminal block.) Thus, command and frequency settings from communication are activated, regardless of the command mode selection (CMOd) or frequency settings mode selection settings (FMOd). However, setting 48: SCLC (switching from communication to local) with input terminal function selection and when inputting from an external device, it is possible to operate at command mode selection (CMOd) and frequency setting mode selection (FMOd) settings.
Moreover, selecting local mode with the EASY key as Local / remote key function changes to panel frequency/panel operation mode.

■ Transmission specifications

Item	Specifications	
Communication protocol	TOSHIBA inverter protocol	MODBUS-RTU protocol
Interface	RS485 compliant	
Transmission scheme	Half duplex [Serial bus type (Line terminations resistor necessary at both ends of system)]	
Wiring	2-wire	
Transmission distance	500 m max. (total length)	
Connection terminals	32max. (including upper host computer) Inverters connected in the system: 32max.	
Synchronization scheme	Start-stop synchronization	
Communication baud rate	9600 bps to 38.4kbps	
Character transmission	<ASCII mode> JIS X0201 8-bit(ASCII) <Binary mode> Binary codes fixed to 8 bits	Binary codes fixed to 8 bits
Error detecting scheme 1	Parity: Even/Odd/Non parity (selectable using a parameter)	
Error detecting scheme 2	Checksum	CRC
Stop bit length	Received by inverter : 1bit / Sent by inverter : 2 bits	
Order of bit transmission format	Low-order bits transmitted first	
Character transmission format	11-bit characters (Stop bit =1 , with parity)	
Inverter Number	<ASCII mode> 0-99 <Binary mode> 0-63 (3Fh)	1-247
Broadcast communication	Inverter Number should be set to <ASCII mode> ** (*? or ?* (?=0-9) is available) <Binary mode> 255 (0FFh)	Inverter Number should be set to 0
Frame length	Variable	
Error correction	None	
Response monitoring	None	
Other	Inverter operation at communication time-over: Select from trip/alarm/none ● When alarm is selected, an alarm is output from the output terminal. When trip is selected, Err5 blinks on the panel.	

6

■ Connection example when using the computer link function

<Independent communication>

Perform computer-inverter connection as follows to send operation frequency commands from the host computer to inverter No. 3:

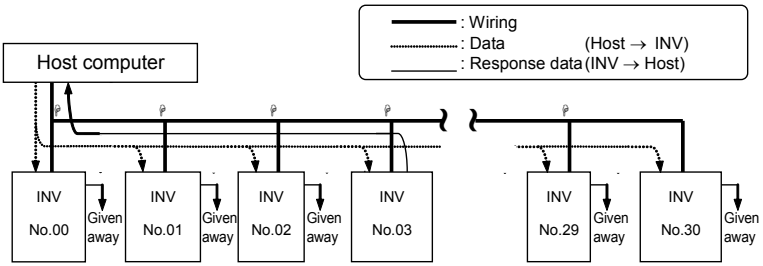

INV= inverter

"Given away": Only the inverter with the selected inverter number conducts data processing. All other inverters, even if they have received the data, give it away and stand by to receive the next data.

● : Use the terminal block to branch the cable.

(1) Data is sent from the host computer.
(2) Data from the computer is received at each inverter and the inverter numbers are checked.
(3) The command is decoded and processed only by the inverter with the selected inverter number.
(4) The selected inverter responds by sending the processing results, together with its own inverter number, to the host computer.
(5) As a result, only the selected inverter starts operating in accordance with the operation frequency command by communicating independently.

<Broadcast communication>

When sending an operation frequency command via a broadcast from the host computer

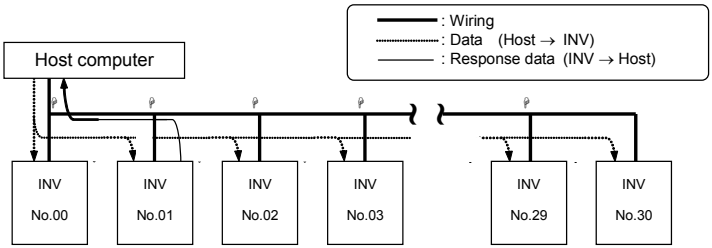

INV= inverter

● : Split the cable among terminal blocks.

(1) Send data from the host computer.
(2) The inverters receive data from the host computer and the inverter number is checked.
(3) When * is next to the position of an inverter number, it is judged a broadcast. The command is decoded and processed.
(4) To prevent data conflicts, only inverters where * is overwritten to 0 can reply with data to the host computer.
(5) As a result, all inverters are operating with the broadcast operation frequency command.

Note: Specify inverter numbers by group for group broadcasts.
(Function only for ASCII mode. For parity mode, see the Communications Function Instruction Manual.)
(Ex) When *1 is set, inverters 01, 11, 21, 31 to 91 can be broadcast to.
In this case, the inverter specified in 01 can reply.

■ Peer-to-peer communication

When all slave inverters are connected they operate at the same frequency as the master inverter (no setting of point frequencies in this case)

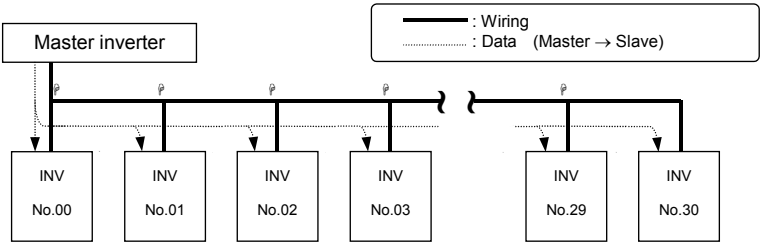

INV= inverter

●: Use the terminal block to branch the cable.

(1) The master inverter transmits frequency command data to its slave inverters.
(2) The slave inverter calculate a frequency reference from the data received and save the frequency calculated.
(3) As a result, all slave inverters operate at the same frequency as the master inverter.

Note: The master inverter always sends frequency command data to its slave inverters.
The slave inverters are always on standby so that they can receive an frequency command from the master inverter at anytime.

6.38.3 Free notes

F880: Free notes

- Function
  To enable easier management and maintenance of the inverter, it is possible to enter the identification number.

[Parameter setting]

Title	Function	Adjustment range	Default setting
F880	Free notes	0 – 65530 (65535)	0

6.38.4 Open network option

C700 to C789 , C800 to C830 : CANopen communication parameters
C001 to C111 , C885 to C896 : Communication option common parameters
C900 to C999
C120 to C148 : CC-Link option parameters
C150 to C164 : PROFIBUS DP option parameters
C200 to C203 : DeviceNet option parameters
C400 to C421 , C850 to C880 : EtherCAT option parameters
C500 to C536 : EtherNet common parameters
C554 to C556 : EtherNet/IP option parameters
C600 to C604 : Modbus TCP option parameters

- CANopen option (Type: CAN001Z, CAN002Z, CAN003Z)
  CC- Link option (Type: CCL003Z)
  PROFIBUS DP option (Type: PDP003Z)
  DeviceNet option (Type: DEV003Z)
  EtherNet / IP-Modbus TCP option (Type: IPE002Z)
  EtherCAT option (Type: IPE003Z)

⇒ Refer to each Instruction Manual of option for details.

6.39 Permanent magnet motors

F910: Step-out detection current level
F911: Step-out detection time
F912: q-axis inductance
F913: d-axis inductance
F915: Factory specific coefficient 9L

- Function
  If the permanent magnet motor (PM motor) steps out and if the exciting current increases (it increases in such a case) and remains above the value set with F910 for the period of time set with F911, the inverter will judge the motor to be stepping out and trip it. At that time, the trip message "SOUt" is displayed.

Title	Function	Adjustment range	Default setting
F910	Step-out detection current level	1 - 150 (%)	100
F911	Step-out detection time	0.00: No detection 0.01–2.55 (s)	0.00
F912	q-axis inductance	0.01-650.0 (mH)	10.00
F913	d-axis inductance	0.01-650.0 (mH)	10.00
F915	Factory specific coefficient 9L	-	-

⇒ Refer to section 6.25.2 about setting motor constants.

Note 1: When using an PM motor, consult your Toshiba distributor, since the inverter is not compatible with all types of PM motors.

Note 2: The inverter may fail to detect step-out in some cases, because it uses an electrical method to detect step-out. To avoid detection failures, you are recommended to install a mechanical step-out detector.

6.40 Traverse function

F980: Traverse selection
F981: Traverse acceleration time
F982: Traverse deceleration time
F983: Traverse step
F984: Traverse jump step

⇒ Refer to “Traverse control Instruction Manual : E6581877” for details.

7. Operations with external signal

7.1 Operating external signals

You can control the inverter externally.
The parameter settings differ depending upon your method of operation. Determine your method of operation (the operational signal input method, speed (frequency) command input method) before using the procedure below to set the parameters.

[Procedure for setting parameters]

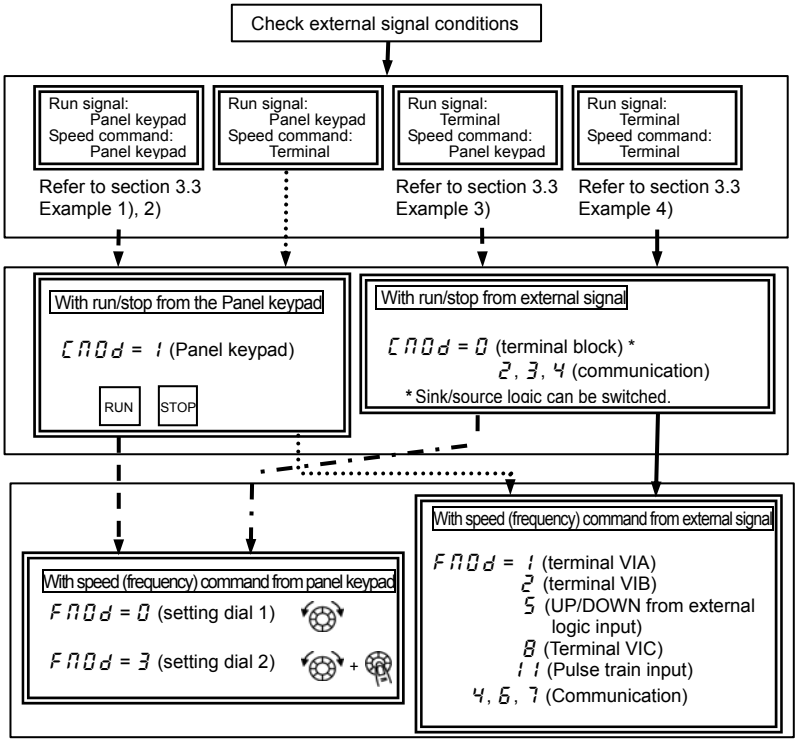

* For settings based on communication, refer to the Communication Manual (E6581913) or section 6.38.

7.2 Applied operations by an I/O signal (operation from the terminal block)

Input terminal sink and source logic are set by using slide switch SW1.

7.2.1 Input terminal function (sink logic)

This function is used to send a signal to the input terminal from an external programmable controller to operate or configure the inverter. The ability to select from a variety of functions allows for flexible system design.
Default settings of slide switch SW1and SW2 are as follows;
SW1: PLC side, SW2: VIB side and S3 side.
Refer to page B-11 to 13 for details.

[Control terminal block]

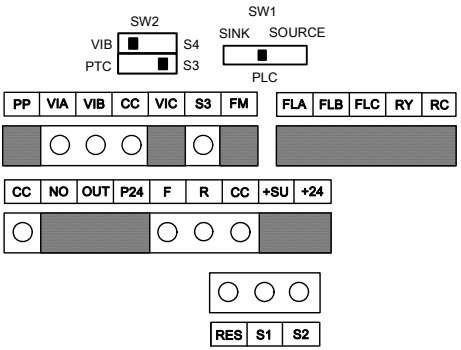

■ Settings for the logic input terminal function

Terminal symbol	Title	Function	Adjustment range	Default setting
F	F111	Input terminal selection 1A (F)	0-203 Note 1)	2 (F)
	F151	Input terminal selection 1B (F)		0 (No function)
	F155	Input terminal selection 1C (F)		0 (No function)
R	F112	Input terminal selection 2A (R)	0-203 Note 1)	4 (R)
	F152	Input terminal selection 2B (R)		0 (No function)
	F156	Input terminal selection 2C (R)		0 (No function)
RES	F113	Input terminal selection 3A (RES)	0-203 Note 1)	8 (RES)
	F153	Input terminal selection 3B (RES)		0 (No function)
S1	F114	Input terminal selection 4A (S1)	0-203 Note 1)	10 (SS1)
	F154	Input terminal selection 4B (S1)		0 (No function)
S2	F115	Input terminal selection 5 (S2)	0-203 Note 3)	12 (SS2)
	F146	Logic input / pulse train input selection (S2)	0: Logic input 1: Pulse train input	0
S3	F116	Input terminal selection 6 (S3)	0-203 Note 4)	14 (SS3)
	F147	Logic input / PTC input selection (S3)	0: Logic input 1: PTC input	0
VIB	F117	Input terminal selection 7 (VIB)	0-203 Note 5)	16 (SS4)
VIA	F118	Input terminal selection 8 (VIA)	8-55 Note 6)	24 (AD2)
VIA VIB	F109	Analog/logic input selection (VIA/VIB)	0-4	0
F to VIB	F144	Input terminal response time	1-1000 (ms) Note 7)	1

Note 1) Multiple functions assigned to a single terminal operate simultaneously.
Note 2) In case of setting always active function, assign the menu number to F104, F108 and F110 (always active function selection).
Note 3) In case of using terminal S2 as a logic input, set the parameter F146=0 (logic input).
Note 4) In case of using terminal S3 as a logic input, set the slide switch SW2 (lower) to S3 side and the parameter F146=0 (logic input).
Note 5) In case of using terminal VIB as a logic input, set the side switch SW2 (upper) to S4 side and set the parameter F109= 1,3, or 4 (logic input). Since/ source logic depends on the slide switch SW1.
Note 6) In case of using terminal VIA as a logic input, set the parameter F109=3 or 4 (logic input).
Note 7) When stable operation cannot be attained because of frequency setting circuit noise, increase the value of F144.

■ Connecting

1) For logic input

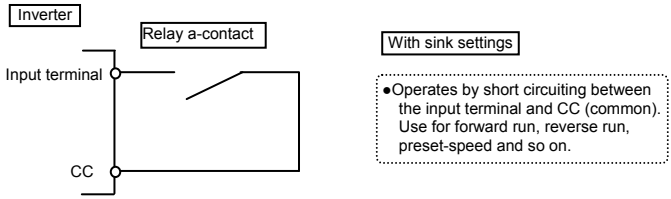

2) For connection (sink logic) via transistor output

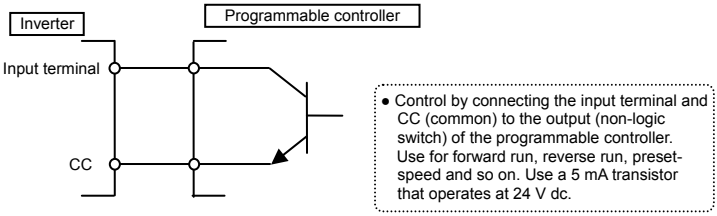

■ Usage example ··· 3-wire operation (one-push operation)

Use the 3-wire operation function to operate the inverter, maintaining operation without using the sequence circuit by inputting an external signal (reset logic signal).

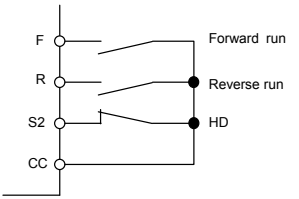

Forward run (F) : Pressing forward run (F) rotates forward at the specified frequency command value.

Reverse run (R) : Pressing reverse run (R) rotates in reverse at the specified frequency command value.

HD (S2): Pressing HD (S2) decelerates and stops.

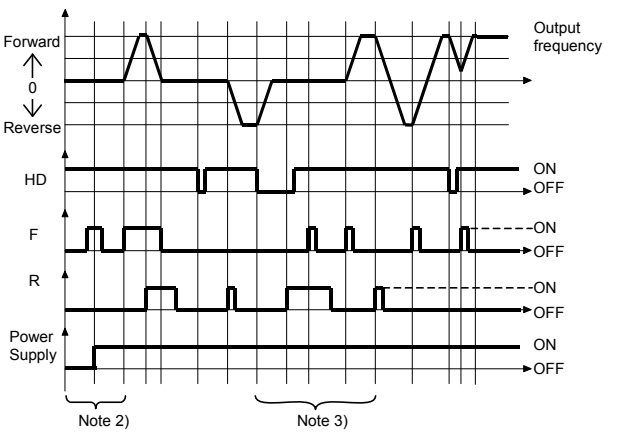

Note 1) Set F110 = 6 (ST: standby) and CMOd = 0 (terminal block) for 3 wire operation. Assign HD (operation hold) to any input terminal at input terminal selection. When assigning the S2 terminal as shown above, set F115 = 50 (HD: Operation hold).

Note 2) If the terminals are ON before turning on the power, terminal input is ignored when the power is turned ON. (Prevents sudden movements.) After turning the power ON, turn terminal input ON again.

Note 3) When HD is OFF, F and R are ignored even when ON. R does not operate even if it's ON when HD is ON. Likewise in this state, F does not operate even if it's ON. Turn F and R OFF and then turn them ON.

Note 4) During 3 wire operation, sending the jog run mode command stops operation.

Note 5) Be aware that DC braking continues even if a startup signal is input during DC braking.

Note 6) Only F and R maintain HD (operation hold). When using F or R in combination with other functions, be aware that the other functions do not hold. For example, when F and SS1 are assigned, F holds, but SS1 does not.

[Parameter settings]

Terminal symbol	Title	Function	Adjustment range	Setting example
S2	F115	Input terminal selection 5 (S2)	0-203	50: HD (Operation hold)

■ List of logic input terminal function settings

Parameter programmed value		Function	Parameter programmed value		Function
Positive logic	Negative logic		Positive logic	Negative logic	
0	1	No function	74	75	Integrating wattmeter (kWh) display clear
2	3	Forward run command	76	77	Trace back trigger signal
4	5	Reverse run command	78	79	Light-load high-speed operation prohibitive signal
6	7	Standby	80	81	Holding of RY-RC terminal output
8	9	Reset command	82	83	Holding of OUT-NO terminal output
10	11	Preset-speed command 1	88	89	Frequency UP *2
12	13	Preset-speed command 2	90	91	Frequency DOWN *2
14	15	Preset-speed command 3	92	93	Clear frequency UP/DOWN *2
16	17	Preset-speed command 4	96	97	Coast stop command
18	19	Jog run mode	98	99	Forward/reverse selection
20	21	Emergency stop by external signal	100	101	Run/Stop command
22	23	DC braking command	104	105	Frequency reference command forced switching
24	25	2nd acceleration/deceleration	106	107	Frequency setting mode terminal block
26	27	3rd acceleration/deceleration	108	109	Command mode terminal block
28	29	2nd V/F control mode switching	110	111	Parameter editing permission
32	33	2nd stall prevention level	120	121	Fast stop command 1
36	37	PID control prohibition	122	123	Fast stop command 2
46	47	External thermal error input	134	135	Traverse permission signal
48	49	Forced local from communication	136	137	Low voltage operation
50	51	Operation hold (hold of 3-wire operation)	140	141	Forward deceleration
52	53	PID integral/differential clear	142	143	Forward stop
54	55	PID characteristics switching	144	145	Reverse deceleration
56	57	Forced run operation	146	147	Reverse stop
58	59	Fire speed operation	148 to 151		Factory specific coefficient *1
60	61	Acceleration/deceleration suspend signal	152	153	No.2 motor switching
62	63	Power failure synchronized signal	200	201	Parameter editing prohibition
64	65	Factory specific coefficient *1	202	203	Parameter reading prohibition
70	71	Factory specific coefficient *1			

*1: Factory specific coefficients are manufacturer setting menus. Do not change the value of these parameters.

*2: Active when FMOd (frequency setting mode selection) = 5 (UP/DOWN from external logic input) is set. The frequency setup range is from 0.0 to FH (maximum frequency). The acceleration/deceleration time relative to the set frequency is ACC/dEC while the acceleration/deceleration speed is not switched.

● Refer to section 11.6 for details about the input terminal function.

7.2.2 Output terminal function (sink logic)

This function is used to output a variety of signals to external devices from the inverter.
With the logic output terminal function, you can select from multiple output terminal functions.
Set two types of functions for the RY-RC, OUT terminal and then you can output when either one or both of them is ON.
Default settings of slide switch SW1and SW2 are as follows;
SW1: PLC side, SW2: VIB side and S3 side.
Refer to page B-11 to 13 for details.

[Control terminal block]

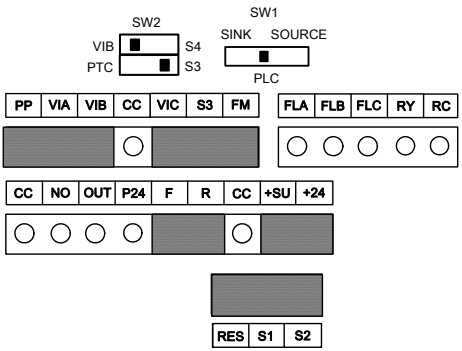

7

■ Usage

Function of FLA, B, C terminals:
Set at parameter F 132 Note 1)

Function of RY terminal:
Set at parameter F 130 and F 137 Note 1)

Function of OUT terminal:
Set at parameter F 131 and F 138

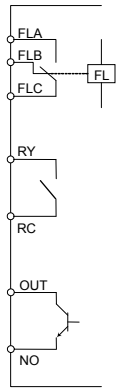

Note1) A chattering (momentary ON/OFF of contact) is generated by external factors of the vibration and the impact, etc. In particular, please set the filter of 10ms or more, or timer for measures when connecting it directly with input unit terminal of programmable controller. Please use the OUT terminal as much as possible when the programmable controller is connected.

■ Assign one type of function to an output terminal

Terminal symbol	Title	Function	Adjustment range	Default setting
RY-RC	F130	Output terminal selection 1A	0 - 255	4 (Low-speed detection signal)
OUT	F131	Output terminal selection 2A		6 (Output frequency attainment signal)
FL (A, B, C)	F132	Output terminal selection 3		10 (Fault signal)

Note 2) When assigning 1 type of function to the RY-RC terminal, set only F130.
Leave parameter F137 as the default setting (F137 = 255).

Note 3) When assigning 1 type of function to the OUT terminal, set only F131.
Leave parameter F138 as the default setting (F138 = 255).

■ Assign two types of functions to the output terminal (RY-RC, OUT)

Terminal symbol	Title	Function	Adjustment range	Default setting
RY-RC	F130	Output terminal selection 1A	0 - 255	4 (Low-speed detection signal)
	F137	Output terminal selection 1B		255 (Always ON)
OUT	F131	Output terminal selection 2A		6 (Output frequency attainment signal)
	F138	Output terminal selection 2B		255 (Always ON)
RY-RC, OUT	F139	Output terminal logic selection	0: F130 and F137 F131 and F138	0
			1: F130 or F137 F131 and F138	
			2: F130 and F137 F131 or F138	
			3: F130 or F137 F131 or F138	

Note 4) F131 and F138 are active only when F669 = 0: Logic output (default).
Function is inactive when F669 = 1: Pulse train output is set.

(1) Output signals when two types of functions are simultaneously turned ON. <AND>

In case of RY-RC terminal, signals are output when parameter F139 = 0 or 2, and the functions set at parameters F130 and F137 are simultaneously turned on.

● Timing chart

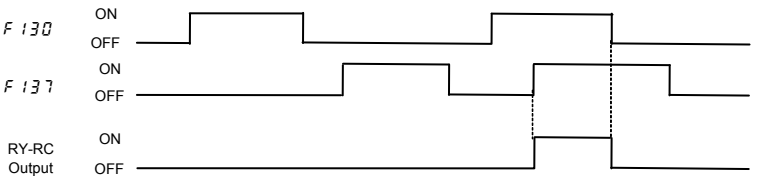

* OUT terminal outputs signals when parameter F139 = 0 or 2, and the functions set at parameters F131 and F138 are simultaneously turned on.

(2) Output signals when either one of two types of functions is turned ON. <OR>

In case of RY-RC terminal, signals are output when parameter F139 = 1 or 3, and either of the functions set at parameters F130 and F137 is turned on.

● Timing chart

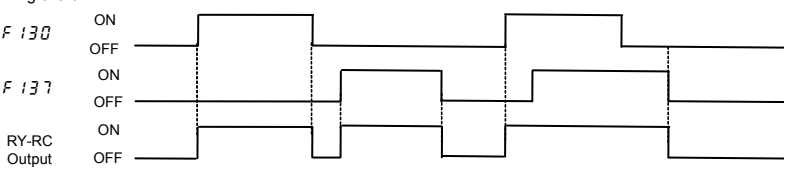

*OUT terminal outputs signals when parameter F139 =2 or 3, and either of the functions set at parameters F131 and F138 is turned on.

(3) Holding the output of signals in ON status

- If the conditions for activating the functions assigned to RY-RC terminal and OUT terminal agree with and as a result the output of signals is put in ON status, the output of signals is held ON, even if the conditions change. (Output terminal holding function)

  Assign function 80 to 83 to an input terminal.
  Once RY-RC terminal or OUT terminal is turned on when the assigned input terminal is ON, RY-RC terminal or OUT terminal is held ON.

Function No.	Code	Function	Action
80	HDRY	Holding of RY-RC terminal output	ON : Once turned on, RY-RC are held on. OFF: The status of RY-RC changes in real time according to conditions.
82	HDOUT	Holding of OUT-NO terminal output	ON : Once turned on, OUT-NO are held on. OFF: The status of OUT-NO changes in real time according to conditions.

Each one of the following numbers (81, 83) is an inverse signal.

■ Usage example ···operational signal, brake signal

Low-speed detection signal outputs the signal when the output frequency exceeds the setting of F100.
This signal can be used as an operation signal by setting F100 to 0.0Hz. (Default setting)
This signal can also be used as an electromagnetic brake excitation/release signal.

Setting example) When outputting the brake signal from RY-RC terminal

Title	Function	Adjustment range	Example of setting
F100	Low-speed signal output frequency	0.0 - FH (Hz)	2.5
F130	Output terminal selection 1A (RY-RC)	0-255	4: LOW (Low-speed detection signal)

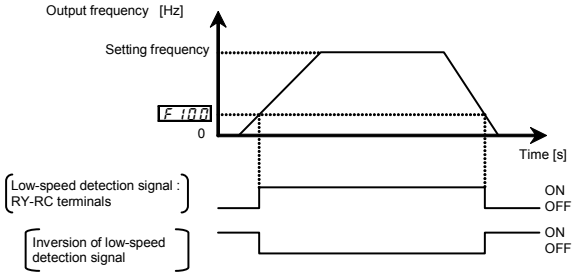

■ List of output terminal function settings

<Explanation of terminology>
• Alarm …… Alarm output when a setting has been exceeded.
• Pre-alarm …… Alarm output when the inverter may cause a trip during continued operation.

List of detection levels for output terminal selection

Parameter programmed value		Function	Parameter programmed value		Function
Positive logic	Negative logic		Positive logic	Negative logic	
0	1	Frequency lower limit	108	109	Heavy load output
2	3	Frequency upper limit	120	121	Lower limit frequency stop
4	5	Low-speed detection signal	122	123	Power failure synchronized operation
6	7	Output frequency attainment signal (acceleration/deceleration completed)	124	125	Traverse in progress
8	9	Set frequency attainment signal	126	127	Traverse deceleration in progress
10	11	Fault signal (trip output)	128	129	Parts replacement alarm
14	15	Over-current detection pre-alarm	130	131	Over-torque detection pre-alarm
16	17	Overload detection pre-alarm	132	133	Frequency setting mode selection 1/2
20	21	Overheat detection pre-alarm	136	137	Panel / remote selection
22	23	Overvoltage detection pre-alarm	138	139	Forced continuous operation in progress
24	25	Power circuit undervoltage detection	140	141	Specified frequency operation in progress
26	27	Small current detection	144	145	Signal in accordance of frequency command
28	29	Over-torque detection	146	147	Fault signal (output also at a retry waiting)
30	31	Braking resistor overload pre-alarm	150	151	PTC input alarm signal
40	41	Run/Stop	152	153	Factory specific coefficient *1
42	43	Serious failure	154	155	Analog input break detection alarm
44	45	Light failure	156	157	F terminal status
50	51	Cooling fan ON/OFF	158	159	R terminal status
52	53	In jogging operation	160	161	Cooling fan replacement alarm
54	55	Operation panel / terminal block operation	162	163	Number of starting alarm
56	57	Cumulative operation time alarm	166	167	Acceleration operation in progress
58	59	Communication option communication error	168	169	Deceleration operation in progress
60	61	Forward/reverse run	170	171	Constant speed operation in progress
62	63	Ready for operation 1	172	173	DC braking in progress
64	65	Ready for operation 2	174 to 179		Factory specific coefficient *1
68	69	Brake release	180	181	Integral input power pulse output signal
70	71	Pre-alarm	182	183	Shock monitoring pre-alarm signal
78	79	RS485 communication error	222 to 253		Factory specific coefficient *1
92	93	Designated data output 1	254		Always OFF
94	95	Designated data output 2	255		Always ON
106	107	Light load output			

*1: Factory specific coefficients are manufacturer setting menus. Do not change the value of these parameters.

Note 1) ON with positive logic : Open collector output transistor or relay turned ON.
OFF with positive logic : Open collector output transistor or relay turned OFF.
ON with negative logic : Open collector output transistor or relay turned OFF.
OFF with negative logic: Open collector output transistor or relay turned ON.

● Refer to section 11.7 for details about the output terminal functions or levels.

7.3 Speed instruction (analog signal) settings from external devices

Function of analog input terminals can be selected from four functions (external potentiometer, 0 to 10Vdc, 4 (0) to 20mAdc, -10 to +10Vdc).
The selective function of analog input terminals gives system design flexibility.
The maximum resolution is 1/1000.
Default settings of slide switch SW1and SW2 are as follows;
SW1: PLC side, SW2: VIB side and S3 side.
Refer to page B-11 to 13 for details.

[Control terminal block]

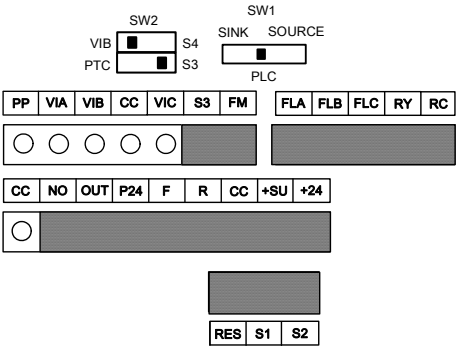

7

■ Analog input terminal function settings

Terminal symbol	Title	Function	Adjustment range	Default setting
VIA	F201	VIA input point 1 setting	0 - 100%	0
	F202	VIA input point 1 frequency	0.0 - 500.0Hz	0.0
	F203	VIA input point 2 setting	0 - 100%	100
	F204	VIA input point 2 frequency	0.0 - 500.0Hz	*1
VIB	F210	VIB input point 1 setting	-100 - +100%	0
	F211	VIB input point 1 frequency	0.0 - 500.0Hz	0.0
	F212	VIB input point 2 setting	-100 - +100%	100
	F213	VIB input point 2 frequency	0.0 - 500.0Hz	*1
VIC	F216	VIC input point 1 setting	0 - 100%	20
	F217	VIC input point 1 frequency	0.0 - 500.0Hz	0.0
	F218	VIC input point 2 setting	0 - 100%	100
	F219	VIC input point 2 frequency	0.0 - 500.0Hz	*1
VIA to VIC	F209	Analog input filter	2 - 1000 ms Note 1)	64

*1: Default setting values vary depending on the setup menu setting. Refer to section 11.5.

Note1) When stable operation cannot be attained because of frequency setting circuit noise, increase the value of F209.

Note 2) Refer to section 5.8 when switching between two types of analog signals.

7.3.1 Settings depending on voltage (0 to 10 V) input <external potentiometer>

You can set the frequency settings by connecting the external potentiometer (1k to 10kΩ) between PP, VIA, and CC terminals.
You can also set by inputting an analog voltage signal of 0 to 10Vdc between the VIA and CC terminals.

The following shows examples when the run command is input from the terminal.

Title	Function	Adjustment range	Default setting	Setting example
CMOd	Command mode selection	0 - 4	1 (panel keypad)	0 (terminal block)
FMOd	Frequency setting mode selection 1	0 - 14	0 (setting dial 1)	1 (terminal VIA)
F109	Analog/logic input selection (VIA/VIB)	0 - 4	0	0 or 1 (Analog input)
F201	VIA input point 1 setting	0 - 100%	0	0
F202	VIA input point 1 frequency	0.0 - 500.0Hz	0.0	0.0
F203	VIA input point 2 setting	0 - 100%	100	100
F204	VIA input point 2 frequency	0.0 - 500.0Hz	*1	50.0/60.0
F209	Analog input filter	2 - 1000 ms	64	64

*1: Default setting values vary depending on the setup menu setting. Refer to section 11.5.

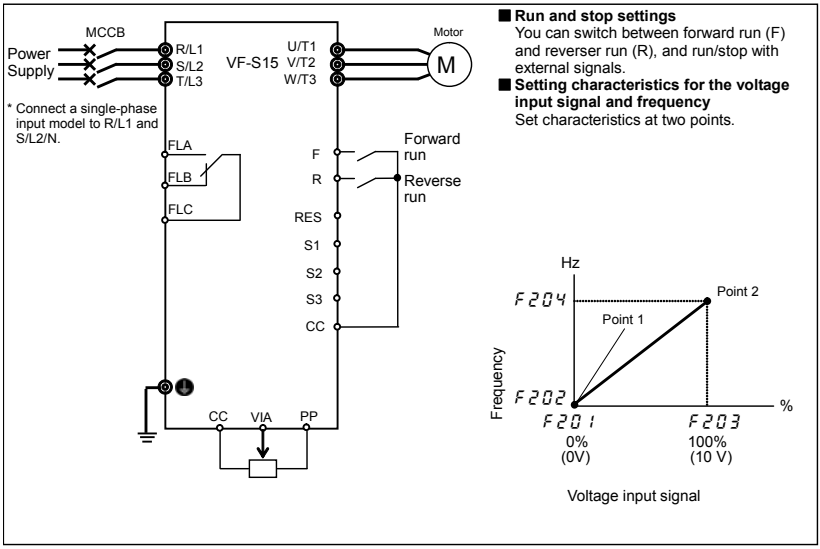

7.3.2 Settings depending on current (4 to 20 mA) input

You can set the frequency settings by inputting an analog current signal of 4 (0) to 20mA dc between the VIC and CC terminals.

The following shows examples when the run command is input from the terminal.

Title	Function	Adjustment range	Default setting	Setting example
CMOd	Command mode selection	0 – 4	1 (panel keypad)	0 (terminal block)
FMOd	Frequency setting mode selection 1	0 – 14	0 (setting dial 1)	8 (terminal VIC)
F216	VIC input point 1 setting	0 – 100%	20	20 (or 0)
F217	VIC input point 1 frequency	0.0 - 500.0Hz	0.0	0.0
F218	VIC input point 2 setting	0 – 100%	100	100
F219	VIC input point 2 frequency	0.0 - 500.0Hz	*1	50.0/60.0
F209	Analog input filter	2 - 1000 ms	64	64

*1: Default setting values vary depending on the setup menu setting. Refer to section 11.5.

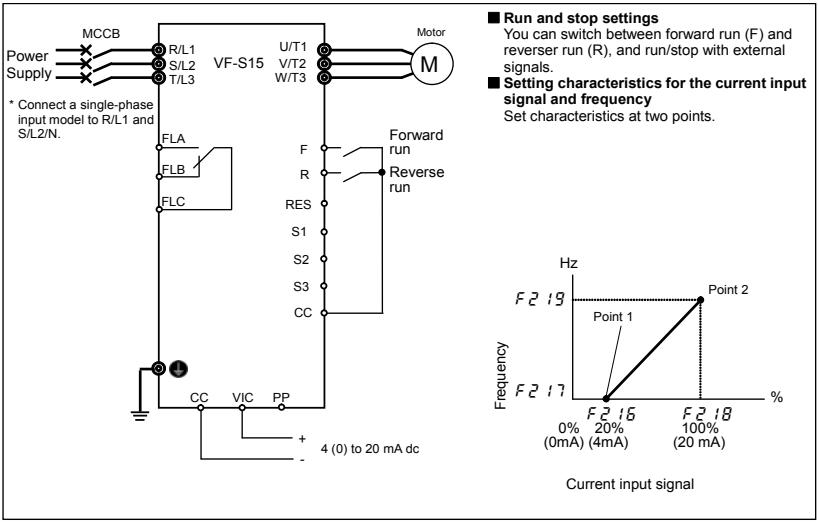

7.3.3 Settings depending on voltage (-10 to +10 V) input

You can set the frequency settings by inputting an analog voltage signal of -10 to +10Vdc between the VIB and CC terminals.

The following shows examples when the run command is input from the terminal.

Title	Function	Adjustment range	Default setting	Setting example
CMOd	Command mode selection	0 – 4	1 (panel keypad)	0 (terminal block)
FMOd	Frequency setting mode selection	0 – 14	0 (setting dial 1)	2 (terminal VIB)
F107	Analog input terminal selection (VIB)	0: 0-+10V 1: -10-+10V	0	1 (-10 - +10V)
F109	Analog/logic input selection (VIA/VIB)	0 – 4	0	0 (Analog input)
F210	VIB input point 1 setting	-100 - +100%	0	0
F211	VIB input point 1 frequency	0.0 - 500.0Hz	0.0	0.0
F212	VIB input point 2 setting	-100 - +100%	100	100
F213	VIB input point 2 frequency	0.0 - 500.0Hz	*1	50.0/60.0
F209	Analog input filter	2 - 1000 ms	64	64

*1: Default setting values vary depending on the setup menu setting. Refer to section 11.5.

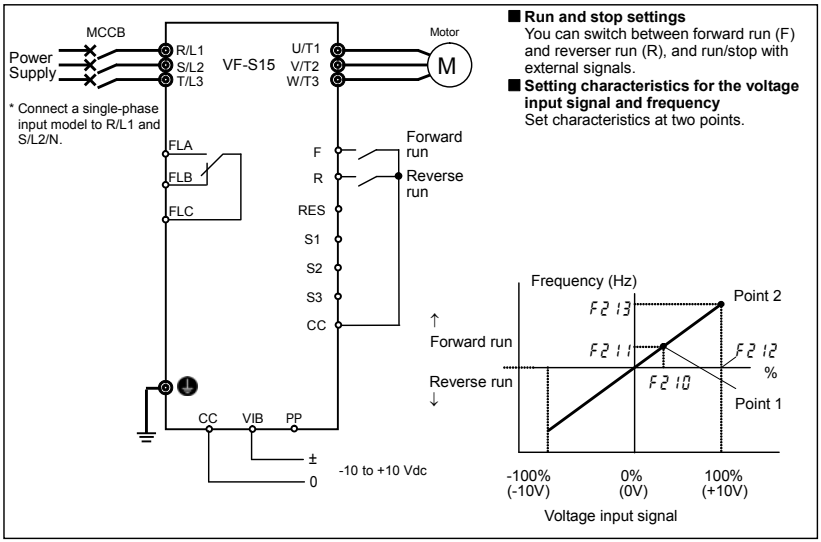

8. Monitoring the operation status

8.1 Flow of status monitor mode

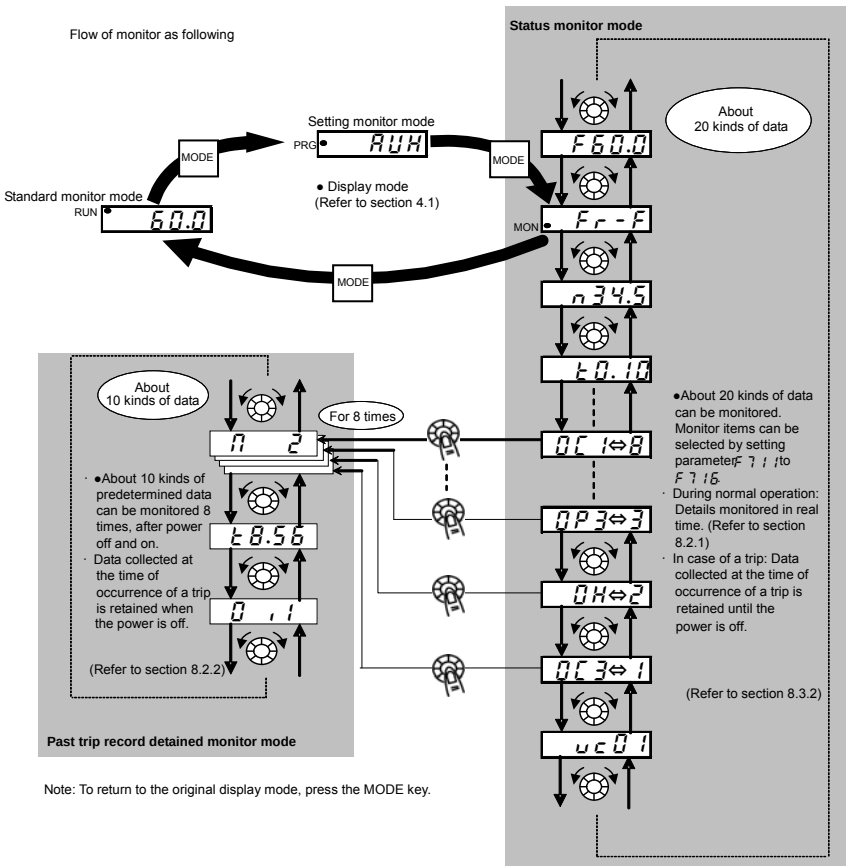

Note: To return to the original display mode, press the MODE key.

8

8.2 Status monitor mode

8.2.1 Status monitor under normal conditions

In this mode, you can monitor the operation status of the inverter.
To display the operation status during normal operation:

Press the MODE key twice.

Setting procedure (eg. operation at 60Hz)

	Item displayed	Panel operated	LED display	Communication No.	Description
	Output frequency *		60.0		The output frequency is displayed (Operation at 60Hz). (When standard monitor display selection F710 is set at 0 [output frequency])
	Parameter setting mode	MODE	AUH		The first basic parameter "AUH" (history function) is displayed.
	Direction of rotation	MODE	Fr-F	FE01	The direction of rotation is displayed. (Fr-F: forward run, Fr-r: reverse run)
Note 1	Frequency command value *		F60.0	FE02	The frequency command value (Hz/free unit) is displayed. (In case of F711=2)
Note 2	Output current *		C 80	FC02	The inverter output current (load current) (%/A) is displayed. (In case of F712=1)
Note 2 Note 3	Input voltage *		U100	FC05	The inverter Input voltage (DC detection) (%/V) is displayed. (In case of F713=3)
Note 2	Output voltage *		P100	FC08	The inverter output voltage (%/V) is displayed. (In case of F714=4)
	Input power *		h12.3	FC06	The inverter input power (kW) is displayed. (In case of F715=5)
	Output power *		H11.8	FC07	The inverter output power (kW) is displayed. (In case of F716=6)
	Inverter load factor *		L 70	FE27	The inverter load factor (%) is displayed. (In case of F717=27)
	Output frequency *		o60.0	FE00	The output frequency (Hz/free unit) is displayed. (In case of F718=0)

* Monitor items can be selected by setting parameters F710 to F718, (F720). Refer to Note 12.

Refer to page H-8 and 9 for notes.

(Continued overleaf)

(Continued)

	Item displayed	Panel operated	LED display	Communication No.	Description
Note 4	Input terminal		0 0 1 0 1 1	FE06	The ON/OFF status of each of the control signal input terminals (F, R, RES, S1, S2, S3, VIB, VIA) are displayed in bits. ON: 1 OFF: 0 0 0 1 0 1 0 1 1 VIA, VIB, S3, S2, F, R, RES, S1
Note 5	Output terminal		0 0 1 1	FE07	The ON/OFF status of each of the control signal output terminals (RY-RC, OUT, FL) are displayed in bits. ON: 1 OFF: 0 0 0 1 1 FL, RY-RC, OUT
	CPU1 version		u 1 0 1	FE08	The version of the CPU1 is displayed.
	CPU2 version		u c 0 1	FE73	The version of the CPU2 is displayed.
	Inverter rated current		A 3 3.0	FE70	The inverter rated current (A) is displayed.
Note 6	Overload and region setting		C - E U	0998 0099	The inverter overload characteristic and region setting is displayed.
Note 7	Past trip 1		0 P 2 ⇔ 1	FE10	Past trip 1 (displayed alternately)
Note 7	Past trip 2		0 H ⇔ 2	FE11	Past trip 2 (displayed alternately)
Note 7	Past trip 3		0 P 3 ⇔ 3	FE12	Past trip 3 (displayed alternately)
Note 7	Past trip 4		0 L 1 ⇔ 4	FE13	Past trip 4 (displayed alternately)
Note 7	Past trip 5		0 L r ⇔ 5	FD10	Past trip 5 (displayed alternately)
Note 7	Past trip 6		0 C 1 ⇔ 6	FD11	Past trip 6 (displayed alternately)
Note 7	Past trip 7		0 C 2 ⇔ 7	FD12	Past trip 7 (displayed alternately)
Note 7	Past trip 8		n E r r ⇔ 8	FD13	Past trip 8 (displayed alternately)

Refer to page H-8 and 9 for notes.

(Continued overleaf)

8

(Continued)

	Item displayed	Panel operated	LED display	Communication No.	Description
	Communication Status		SL , ,	FD57	The status of signal transmission and reception of communication are displayed in bits. SL , , RX: signal receiving TX: signal transmitting receiving or transmitting : 1 not receiving or not transmitting: ,
Note 8	Parts replacement alarm information		n , , , , , 1	FE79	The ON/OFF status of each of the cooling fan, circuit board capacitor, main circuit capacitor of parts replacement alarm, cumulative operation time or number of starting are displayed in bits. n , , , , , 1 Number of starting Cumulative operation time Main circuit capacitor Cooling fan Control circuit board capacitor
Note 9	Cumulative operation time		t 10.1	FE14	The cumulative operation time is displayed. (0.10=10 hours, 1.00=100 hours)
	Number of starting		n 34.5	FD32	Number of starting (10000 times)
	Default display mode	MODE	60.0		The output frequency is displayed (Operation at 60Hz).

8.2.2 Display of detailed information on a past trip

Details on a past trip (of trips 1 to 8) can be displayed, as shown in the table below, by pressing the center of the setting dial when the trip record is selected in the status monitor mode.

Unlike the "Display of trip information at the occurrence of a trip" in 8.3.2, details on a past trip can be displayed, even after the inverter is turned off or reset.

	Item displayed	Panel operated	LED display	Description
Note 10	Past trip 1		OC 1 ⇔ 1	Past trip 1 (displayed alternately)
	Continuous trips		n 2	For OCA, OCL and Err5 the number of times (maximum of 31) the same trip occurred in succession is displayed (unit: times). Detailed information is recorded at the latest value.

	Item displayed	Panel operated	LED display	Description
	Output frequency		o 60.0	The output frequency when the trip occurred is displayed.
	Direction of rotation		Fr-F	The direction of rotation when the trip occurred is displayed. (Fr-F: Forward run, Fr-r: Reverse run)
Note 1	Frequency command value *		F 80.0	The frequency command value when the trip occurred is displayed.
Note 2	Output current		C 150	The inverter output current when the trip occurred is displayed. (%/A)
Note 2 Note 3	Input voltage		Y 120	The inverter input voltage (DC detection) when the trip occurred is displayed. (%/V).
Note 2	Output voltage		P 100	The inverter output voltage when the trip occurred is displayed. (%/V)
Note 4	Input terminal		0 0 1 0 0 1 1	The ON/OFF status of each of the control signal input terminals (F, R, RES, S1, S2, S3, VIB, VIA) are displayed in bits. ON: 1 OFF: 0 0 0 1 0 0 1 1 1 VIA, VIB, S3, S2, F, R, RES, S1
Note 5	Output terminal		0 011	The ON/OFF status of each of the control signal output terminals (RY-RC, OUT, FL) are displayed in bits. ON: 1 OFF: 0 0 011 FL, RY-RC, OUT
Note 9	Cumulative operation time		t 8.56	The cumulative operation time when the trip occurred is displayed. (0.10=10 hours, 1.00=100 hours)
	Past trip 1	MODE	OC1 ⇔ 1	Press this key to return to past trip 1.

*The monitor value of a trip is not always recorded as the maximum value because of the time required for detection.

Refer to page H-8 and 9 for notes.

8.3 Display of trip information

8.3.1 Trip code display

If the inverter trips, an error code is displayed to suggest the cause. Since trip records are retained, information on each trip can be displayed anytime in the status monitor mode.
Refer to section 13.1 for details about trip code display.

- The monitor value of a trip is not always recorded as the maximum value because of the time required for detection.

8.3.2 Display of trip information at the occurrence of a trip

At the occurrence of a trip, the same information as that displayed in the mode described in “8.2.1 Status monitor under normal conditions ", can be displayed, as shown in the table below, if the inverter is not turned off or reset. To display trip information after turning off or resetting the inverter, follow the steps described in “8.2.2 Display of detailed information on a past trip ".

■ Example of call-up of trip information

	Item displayed	Panel operated	LED display	Communication No.	Description
	Cause of trip		OP2		Status monitor mode (The code blinks if a trip occurs.) The motor coasts and comes to a stop (coast stop).
	Parameter setting mode	MODE	AUH		The first basic parameter “AUH” (history function) is displayed.
	Direction of rotation	MODE	Fr-F	FE01	The direction of rotation at the occurrence of a trip is displayed. (Fr-F: forward run, Fr-r: reverse run).
Note 1	Frequency command value *		F60.0	FE02	The frequency command value (Hz/free unit) at the occurrence of a trip is displayed. (In case of F711=2)
Note 2	Output current *		C130	FC02	The output power of the inverter at the occurrence of a trip (%/A) is displayed. (In case of F712=1)
Note 2 Note 3	Input voltage *		y141	FC05	The inverter input voltage (DC detection) (%/V) at the occurrence of a trip is displayed. (In case of F713=3)
Note 2	Output voltage *		P100	FC08	The output voltage of the inverter at the occurrence of a trip (%/V) is displayed. (In case of F714=4)
	Input power *		h12.3	FC06	The inverter input power (kW) is displayed. (In case of F715=5)
	Output power *		H11.8	FC07	The inverter output power (kW) is displayed. (In case of F716=6)
	Inverter load factor *		L 70	FE27	The inverter load factor (%) at the occurrence of a trip is displayed. (In case of F717=27)
	Output frequency *		o60.0	FE00	The inverter output frequency (Hz/free unit) at the occurrence of a trip is displayed. (In case of F718=0)

* Monitor items can be selected by settings parameters F710 to F718 (F720). Note 12

Refer to page H-8 and 9 for notes. (Continued overleaf)

(Continued)

	Item displayed	Panel operated	LED display	Communication No.	Description
Note 4	Input terminal		0 0 1 0 1 0 1	FE06	The ON/OFF status of each of the control signal input terminals (F, R, RES, S1, S2, S3, VIB, VIA) are displayed in bits. ON: 1 OFF: 0 VIA, VIB, S3, S2, F, R, RES, S1
Note 5	Output terminal		0 0 1 1	FE07	The ON/OFF status of each of the control signal output terminals (RY-RC, OUT, FL) are displayed in bits. ON: 1 OFF: 0 FL, OUT, RY-RC
	CPU1 version		u 1 0 1	FE08	The version of the CPU1 is displayed.
	CPU2 version		uc 0 1	FE73	The version of the CPU2 is displayed.
	Inverter rated current		A 3 3.0	FE70	The inverter rated current (A) is displayed.
Note 6	Overload and region setting		C - E U	0998 0099	The inverter overload characteristic and region setting is displayed.
Note 7	Past trip 1		OP2 ⇔ 1	FE10	Past trip 1 (displayed alternately)
Note 7	Past trip 2		OH ⇔ 2	FE11	Past trip 2 (displayed alternately)
Note 7	Past trip 3		OP3 ⇔ 3	FE12	Past trip 3 (displayed alternately)
Note 7	Past trip 4		OL 1 ⇔ 4	FE13	Past trip 4 (displayed alternately)
Note 7	Past trip 5		OLr ⇔ 5	FD10	Past trip 5 (displayed alternately)
Note 7	Past trip 6		OC 1 ⇔ 6	FD11	Past trip 6 (displayed alternately)
Note 7	Past trip 7		OC 2 ⇔ 7	FD12	Past trip 7 (displayed alternately)
Note 7	Past trip 8		nErr ⇔ 8	FD13	Past trip 8 (displayed alternately)

Refer to page H-8 and 9 for notes.

(Continued overleaf)

8

(Continued)

	Item displayed	Panel operated	LED display	Communication No.	Description
	Communication Status		SL , ,	FD57	The status of signal transmission and reception of communication are displayed in bits. SL , , RX: signal receiving TX: signal transmitting receiving or transmitting : 1 not receiving or not transmitting: ,
Note 8	Parts replacement alarm information		n , , , , 1	FE79	The ON/OFF status of each of the cooling fan, circuit board capacitor, main circuit capacitor of parts replacement alarm, cumulative operation time or number of starting are displayed in bits. ON: 1 OFF: , n , , , , 1 Number of starting Cumulative operation time Main circuit capacitor Cooling fan Control circuit board capacitor
Note 9	Cumulative operation time		t 10.1	FE14	The cumulative operation time is displayed. (0.10=10 hours, 1.00=100 hours)
	Number of starting		n 34.5	FD32	Number of starting (10000 times)
	Default display mode	MODE	OP2		The cause of the trip is displayed.

Note 1: The characters to the left disappear at 100 Hz or more. (Ex: 120 Hz is 120.0)

Note 2: You can switch between % and A (ampere)/V (volt), using the parameter F701 (current/voltage unit selection).

Note 3: The input (DC) voltage displayed is $1/\sqrt{2}$ times as large as the rectified d.c. input voltage.

Note 4: < VIA bar > F109 = 3, 4 (Contact input): activated ON/OFF depend on VIA terminal input.
F109 = 0 to 2 (Analog input): always OFF.
< VIB bar > F109 = 1 to 4 (Contact input): activated ON/OFF depend on VIB terminal input.
F109 = 0 (Analog input): always OFF.
< S2 bar > F146 = 0 (Contact input): activated ON/OFF depend on S2 terminal input.
F146 = 1 (Pulse train input): always OFF.
< S3 bar > F147 = 0 (Contact input): activated ON/OFF depend on S3 terminal input.
F147 = 1 (PTC input): always OFF.

Note 5: < OUT bar > F669 = 0 (Logic output): activated ON/OFF depend on OUT terminal output.
F669 = 1 (Pulse train output): always OFF.

Note 6: Overload characteristic of inverter and region setting are displayed on the monitor as follows;

C-xx : AUL = 1 (Constant torque characteristic) is selected.
u-xx : AUL =2 (Variable torque characteristic) is selected.
x-EU : Setup menu is selected to EU.
x-AS : Setup menu is selected to AS 1A.
x-US : Setup menu is selected to USA.
x-JP : Setup menu is selected to JP.

Note 7: Past trip records are displayed in the following sequence: 1 (latest trip record) ⇔2⇔3⇔4⇔5⇔6⇔7⇔8 (oldest trip record). If no trip occurred in the past, the message "nErr" will be displayed. Details on past trip record 1 to 8 can be displayed by pressing the center of the setting dial when past trip 1 to 8 is displayed. Refer to section 8.2.2 for details.

Note 8: Parts replacement alarm is displayed based on the value calculated from the annual average ambient temperature specified using F634, the ON time of the inverter, the operating time of the motor and the output current (load factor). Use this alarm as a guide only, since it is based on a rough estimation.

Note 9: The cumulative operation time increments only when the machine is in operation.

Note 10: If there is no trip record, nErr is displayed.

Note 11: Of the items displayed on the monitor, the reference values of items expressed in percent are listed below.

- Output current: The current monitored is displayed in percentage. The value indicated on the nameplate is 100%. The unit can be switched to A (amperes).
- Input voltage: The voltage displayed is the voltage determined by converting the voltage measured in the DC section into an AC voltage. The reference value (100% value) is 200V (240V class), 400V (500V class). The unit can be switched to V (volts).
- Output voltage: The voltage displayed is the output command voltage. The reference value (100% value) is 200V (240V class), 400V (500V class). This unit can be switched to V (volts).
- Load factor of inverter: Depending on the PWM carrier frequency (F300) setting and so on, the actual rated current may become smaller than the rated output current indicated on the nameplate. With the actual rated current at that time (after a reduction) as 100%, the proportion of the load current to the rated current is indicated in percent. The load factor is also used to calculate the conditions for overload trip (OL 1).

Note 12: Status monitor of * mark is displayed by F710 to F718 and F720 setting. The left side character is as following table by each parameter setting number.

Parameter	Setting No.	LED display	Function	Unit	Communication No.
F710 to F718, F720	0	o60.0	Output frequency	Hz / free unit	FE00
	1	C16.5	Output current *1	% / A	FC02
	2	F50.0	Frequency command value	Hz / free unit	FE02
	3	y100	Input voltage (DC detection) *1	% / V	FC05
	4	P 90	Output voltage (command value) *1	% / V	FC08
	5	h 3.0	Input power *1	kW	FC06
	6	H 2.8	Output power *1	kW	FC07
	7	q 80	Torque *1, *2	%	FC04
	9	G 60	Motor cumulative load factor	%	FE23
	10	L 80	Inverter cumulative load factor	%	FE24
	11	r 80	PBR (Braking resistor) cumulative load factor	%	FE25
	12	bS1.0	Stator frequency	Hz / free unit	FE15
	13	A 65	VIA input value	%	FE35
	14	b 45	VIB input value *2	%	FE36
	18	*3	Arbitrary code from communication	*3	*3
	20	C 35	VIC input value	%	FE37
	21	P800	Pulse train input value	pps	FE56
	23	d40.0	PID feedback value	Hz / free unit	FE22
	24	h356	Integral input power	Depend on F749	FE76
	25	H348	Integral output power	Depend on F749	FE77
	26	G 75	Motor load factor	%	FE26
	27	L 70	Inverter load factor	%	FE27
	28	A33.0	Inverter rated current	A	FE70
	29	F 70	FM output value	%	FE40
	30	P800	Pulse train output value	pps	FD40
	31	P34.5	Cumulative power on time	100 hours	FE80
	32	F28.6	Cumulative fan operation time	100 hours	FD41
	33	tc27.7	Cumulative operation time	100 hours	FD14
	34	n89.0	Number of starting times	10000 times	FD32
	35	F45.5	Forward number of starting times	10000 times	FD33
	36	r43.5	Reverse number of starting times	10000 times	FD34
	37	A 2	Number of trip	times	FD35
	40	A33.0	Inverter rated current (Carrier frequency corrected)	A	FD70
	52	c50.0	During stop : Frequency command value During operation : Output frequency	Hz / free unit	FE99

8

*1: These monitor values can be filtered by F746 setting.

*2: If a negative value of signed signal is specified, the negative sign "-" is displayed. When the negative sign "-" is displayed, do not display "9", "b".

*3: Data set with FA65-FA79 is displayed.

⇒ For details, refer to Communication Function Instruction Manual(E6581913).

9. Measures to satisfy the standards

9.1 How to cope with the CE Marking Directive

In Europe, the EMC Directive and the Low Voltage Directive, which took effect in 1996 and 1997, respectively, made it obligatory to put the CE mark on every applicable product to prove that it complies with the directives. Inverters do not work alone but are designed to be installed in a control panel and always used in combination with other machines or systems for the purpose of controlling them. So they themselves were not considered to be subject to the EMC Directive. However the component also became subject to law with the enforcement of the new EMC Directive in 2007. For this reason, we put CE mark on all inverters in accordance with the EMC Directive and the Low Voltage Directive.

The CE mark must be put on all machines and systems with built-in inverters because such machines and systems are subject to the above directives. If they are "final" products, they might also be subject to the Machinery Directive. It is the responsibility of the manufacturers of such final products to put the CE mark on each final product. In order to make machines and systems with built-in inverters comply with the EMC Directive and the Low Voltage Directive, this section explains how to install inverters and what measures should be taken to satisfy the EMC Directive.

We have tested representative models with them installed under the environment described later in this manual to check for conformity with the EMC Directive. However, we cannot check the inverters under your operating environment. EMC varies depending on the composition of the control panel with a built-in inverter(s), the relationship with other built-in electrical components, the wiring condition, the layout condition, and so on. Therefore, please verify yourself whether your machine or system conforms to the EMC Directive.

9.1.1 About the EMC Directive

The CE mark must be put on every final product that includes an inverter(s) and a motor(s). In this series of inverters are equipped with an EMC filter and complies with the EMC Directive if wiring is carried out correctly.

■ EMC Directive
2004/108/EC

The EMC standards are broadly divided into two categories; Emission and Immunity, each of which is further categorized according to the operating environment of each individual machine. Since inverters are intended for use with industrial systems under industrial environments, they fall within the EMC categories listed in Table 1 below. We consider that the tests required for machines and systems as final products are almost the same as those required for inverters.

Table 1 EMC standards

Category	Subcategory	Product standards	Test standard
Emission	Radiated noise	IEC 61800-3	CISPR11(EN55011)
	Conducted noise		CISPR11(EN55011)
Immunity	Static discharge		IEC61000-4-2
	Radioactive radio-frequency magnetic contactor field		IEC61000-4-3
	First transient burst		IEC61000-4-4
	Surge		IEC61000-4-5
	Radio-frequency induction/transmission interference		IEC61000-4-6
	Voltage dip/Interruption of power		IEC61000-4-11

9.1.2 Measures to satisfy the EMC Directive

This subsection explains what measures must be taken to satisfy the EMC Directive.

(1) Insert an EMC filter on the input side of the inverter to reduce conducted noise and radiated noise from input cables.
Single-phase 240V class and three-phase 500V class inverters are equipped with an EMC filter.

Table 2 Combinations of inverter and EMC filter

Three-phase 240 V class

Combination of inverter and filter		
Inverter type	Conducted noise IEC61800-3, category C1 (Motor wiring length of 1m or less)	Conducted noise IEC61800-3, category C2 (Motor wiring length of 5m or less)
VFS15-2004PM-W	EMFS11-2007AZ	
VFS15-2007PM-W	EMFS11-2007AZ	
VFS15-2015PM-W	EMFS11-4015BZ	
VFS15-2022PM-W	EMFS11-4015BZ	
VFS15-2037PM-W	EMFS11-4025CZ	
VFS15-2055PM-W	EMFS11-4047DZ	
VFS15-2075PM-W	EMFS11-4047DZ	
VFS15-2110PM-W	EMFS11-2083EZ	
VFS15-2150PM-W	EMFS11-2083EZ	

Single-phase 240 V class

Combination of inverter and filter			
Inverter type	Conducted noise IEC61800-3, category C2 (Motor wiring length of 5m or less)	Conducted noise IEC61800-3, category C1 (Motor wiring length of 20m or less)	Conducted noise IEC61800-3, category C2 (Motor wiring length of 50m or less)
VFS15S-2002PL-W	Built-in filter	EMFS11S-2009AZ	
VFS15S-2004PL-W		EMFS11S-2009AZ	
VFS15S-2007PL-W		EMFS11S-2009AZ	
VFS15S-2015PL-W		EMFS11S-2016BZ	
VFS15S-2022PL-W		EMFS11S-2022CZ	

Three-phase 500 V class

Combination of inverter and filter				
Inverter type	Conducted noise IEC61800-3, category C2 Motor wiring length of 5m or less)	Conducted noise IEC61800-3, category C3 (Motor wiring length of 25m or less)	Conducted noise IEC61800-3, category C1 (Motor wiring length of 20m or less)	Conducted noise IEC61800-3, category C2 (Motor wiring length of 50m or less)
VFS15-4004PL-W	Built-in filter	Built-in filter	EMFS11-4015BZ	
VFS15-4007PL-W			EMFS11-4015BZ	
VFS15-4015PL-W			EMFS11-4015BZ	
VFS15-4022PL-W			EMFS11-4025CZ	
VFS15-4037PL-W			EMFS11-4025CZ	
VFS15-4055PL-W			EMFS11-4047DZ	
VFS15-4075PL-W			EMFS11-4047DZ	
VFS15-4110PL-W	-	Built-in filter	EMFS11-4049EZ	
VFS15-4150PL-W			EMFS11-4049EZ	

(2) Use shielded power cables, such as inverter output cables, and shielded control cables. Route the cables and wires so as to minimize their lengths. Keep a distance between the power cable and the control cable and between the input and output wires of the power cable. Do not route them in parallel or bind them together. Instead, if necessary, cross at right angle.

(3) It is more effective in limiting the radiated noise to install the inverter in a sealed steel cabinet. Using wires as thick and short as possible, earth the metal plate and the control panel securely with a distance kept between the earth cable and the power cable.

(4) Route the input and output wires apart as far as possible from each other.

(5) To suppress radiated noise from cables, ground all shielded cables through a noise cut plate.
It is effective to earth shielded cables in the vicinity of the inverter and cabinet (within a radius of 10cm from each of them). Inserting a ferrite core in a shielded cable is even more effective in limiting the radiated noise.

(6) To further limit the radiated noise, insert a zero-phase reactor in the inverter output line and insert ferrite cores in the earth cables of the metal plate and cabinet.

[Example of wiring]

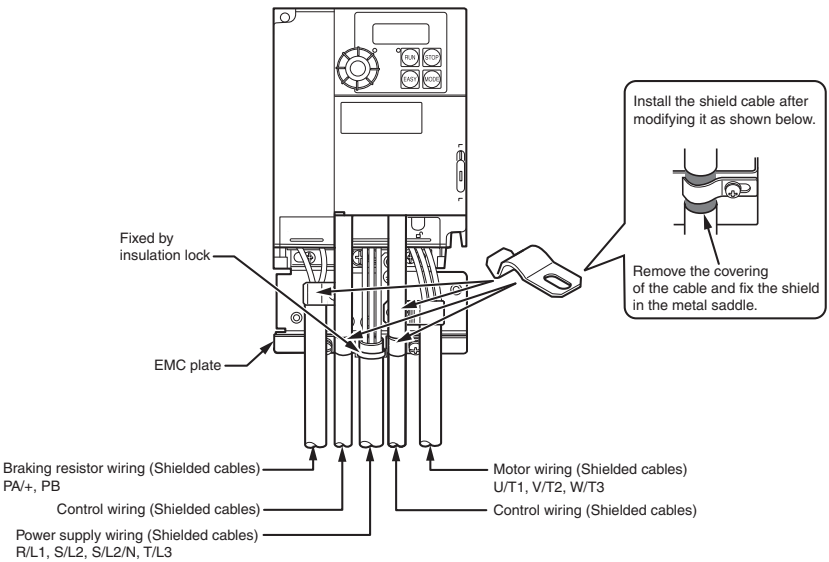

9.1.3 About the Low Voltage Directive

The Low Voltage Directive provides for the safety of machines and systems. All Toshiba inverters are CE-marked in accordance with the standard EN 50178 specified by the Low Voltage Directive, and can therefore be installed in machines or systems and imported without problem to European countries.

Applicable standard: IEC61800-5-1
Pollution level: 2
Overvoltage category: 3

9.1.4 Measures to satisfy the Low Voltage Directive

When incorporating the inverter into a machine or system, it is necessary to take the following measures so that the inverter satisfies the Low Voltage Directive.

(1) Install the inverter in a cabinet and ground the inverter enclosure. When doing maintenance, be extremely careful not to put your fingers into the inverter through a wiring hole and touch a charged part, which may occur depending on the model and capacity of the inverter used.

(2) Connect earth wiring to the earth terminal on the EMC plate. Or install the EMC plate (attached as standard) and another cable connect to earth terminal on the EMC plate. Refer to the table in 10.1 for details about earth cable sizes. A minimum wire size of 10mm^2 may be required to meet standards limiting leakage current.

(3) Install a non-fuse circuit breaker or a fuse on the input side of the inverter. (Refer to section 10.1 and 9.2.3)

9.2 Compliance with UL Standard and CSA Standard

This inverter that conform to the UL Standard and CSA Standard based on the rated current of the nameplate have the UL/CSA mark on the nameplate.

9.2.1 Compliance with Installation

A UL certificate was granted on the assumption that the inverter would be installed in a cabinet. Therefore, install the inverter in a cabinet and if necessary, take measures to maintain the ambient temperature (temperature in the cabinet) within the specified temperature range. (Refer to section 1.4.4)

Note) 0.75 kW or less in 240V class of VF-S15, maintain the ambient temperature of 40°C or less for the compliance with UL standard.

9.2.2 Compliance with Connection

Use the UL conformed cables (Rating 75 °C or more, Use the copper conductors only.) to the main circuit terminals (R/L1, S/L2, S/L2/N, T/L3, U/T1, V/T2, W/T3).

For instruction in the United States, Integral solid state short circuit protection does not provide branch circuit protection. Branch circuit protection must be provided in accordance with the National Electrical Code and any additional local codes.
For instruction in the Canada, Integral solid state short circuit protection does not provide branch circuit protection. Branch circuit protection must be provided in accordance with the Canadian Electrical Code and any additional local codes.

9.2.3 Compliance with Peripheral devices

Use the UL listed fuses at connecting to power supply.
Short circuit test is performed under the condition of the power supply short-circuit currents in below.
These interrupting capacities and fuse rating currents depend on the applicable motor capacities.

■ AIC, Fuse and Wire sizes

Inverter model	Voltage (V)	Input withstand rating (kA)	Output Interrupt rating (kA)	Branch circuit protection	Rating (A)	Cable sizes of power circuit	Earth Cable
Markig	Y	(1)	X (2)	Z1	Z2	-	-
VFS15-2004PM-W	240	5	5	Class CC	7	AWG 14	AWG 14
VFS15-2007PM-W	240	5	5	Class J	15	AWG 14	AWG 14
VFS15-2015PM-W	240	5	5	Class J	25	AWG 14	AWG 14
VFS15-2022PM-W	240	5	5	Class J	25	AWG 12	AWG 14
VFS15-2037PM-W	240	5	5	Class J	45	AWG 10	AWG 10
VFS15-2055PM-W	240	22	5	Class J	60	AWG 8	AWG 10
VFS15-2075PM-W	240	22	5	Class J	70	AWG 6	AWG 10
VFS15-2110PM-W	240	22	5	Class J	100	AWG 6*2	AWG 8
VFS15-2150PM-W	240	22	5	Class J	110	AWG 6*2	AWG 8
VFS15S-2002PL-W	240	1	5	Class CC	7	AWG 14	AWG 14
VFS15S-2004PL-W	240	1	5	Class J	15	AWG 14	AWG 14
VFS15S-2007PL-W	240	1	5	Class J	25	AWG 14	AWG 14
VFS15S-2015PL-W	240	1	5	Class J	40	AWG 10	AWG 12
VFS15S-2022PL-W	240	1	5	Class J	45	AWG 10	AWG 10
VFS15-4004PL-W	500	5	5	Class CC	6	AWG 14	AWG 14
VFS15-4007PL-W	500	5	5	Class CC	6	AWG 14	AWG 14
VFS15-4015PL-W	500	5	5	Class CC	12	AWG 14	AWG 14
VFS15-4022PL-W	500	5	5	Class J	15	AWG 14	AWG 14
VFS15-4037PL-W	500	5	5	Class J	25	AWG 12	AWG 14
VFS15-4055PL-W	500	22	5	Class J	40	AWG 10	AWG 10
VFS15-4075PL-W	500	22	5	Class J	40	AWG 8	AWG 10
VFS15-4110PL-W	500	22	5	Class J	60	AWG 8	AWG 10
VFS15-4150PL-W	500	22	5	Class J	70	AWG 6	AWG 10

Suitable for use on a circuit capable of delivering not more than___X___rms symmetrical kilo Amperes,___Y___Volts maximum, when protected by___Z1___with a maximum rating of___Z2___.

(1) Input withstand rating is that for which the product has been designed thermally. Installation on a supply greater than this level will require additional inductance to satisfy this level.

(2) Output interrupt rating relies on Integral solid state short circuit protection. This does not provide branch circuit protection. Branch circuit protection must be provided in accordance with the National Electrical Code and any additional local codes. This is dependant on the type of installation.

In case of using VF-S15 with a higher AIC capability up to 100kA(*1), install the minimum input inductance or more listed in the following table. The Short Circuit Current Ratings (SCCR) become 100kA(*1) by installing VF-S15 with the circuit breakers(GV3P) or the fuses listed in the following table.

■ AIC 100kA, Branch circuit protection and Wire sizes

Inverter model	Minimum input Inductance (mH)	Branch circuit protection				Cable sizes of power circuit	Earth Cable
		With Fuses (Bussman /Ferraz)	Fuse Rating (A)	With circuit breakers (Schneider)	Breaker Setting (A)		
VFS15-2004PM-W	0.05	Class J	10	GV3P13	9	AWG 14	AWG 14
VFS15-2007PM-W	0.05	Class J	15	GV3P13	9	AWG 14	AWG 14
VFS15-2015PM-W	0.05	Class J	25	GV3P13	10	AWG 14	AWG 14
VFS15-2022PM-W	0.05	Class J	25	GV3P18	18	AWG 12	AWG 14
VFS15-2037PM-W	0.05	Class J	45	GV3P25	25	AWG 10	AWG 10
VFS15-2055PM-W	0.02	Class J	60	GV3P40	40	AWG 8	AWG 10
VFS15-2075PM-W	0.02	Class J	70	GV3P50	50	AWG 6	AWG 10
VFS15-2110PM-W	0.02	Class J	100	GV3P65	65	AWG 6*2	AWG 8
VFS15-2150PM-W	0.02	Class J	110			AWG 6*2	AWG 8
VFS15S-2002PL-W	0.28	Class J	10	GV3P13	9	AWG 14	AWG 14
VFS15S-2004PL-W	0.28	Class J	15	GV3P13	9	AWG 14	AWG 14
VFS15S-2007PL-W	0.28	Class J	25	GV3P13	13	AWG 14	AWG 14
VFS15S-2015PL-W	0.28	Class J	40	GV3P25	25	AWG 10	AWG 12
VFS15S-2022PL-W	0.28	Class J	45	GV3P32	32	AWG 10	AWG 10
VFS15-4004PL-W	0.10	Class J	6	GV3P13	9	AWG 14	AWG 14
VFS15-4007PL-W	0.10	Class J	6	GV3P13	9	AWG 14	AWG 14
VFS15-4015PL-W	0.10	Class J	15	GV3P13	9	AWG 14	AWG 14
VFS15-4022PL-W	0.10	Class J	15	GV3P13	10	AWG 14	AWG 14
VFS15-4037PL-W	0.10	Class J	25	GV3P13	13	AWG 12	AWG 14
VFS15-4055PL-W	0.03	Class J	40	GV3P18	18	AWG 10	AWG 10
VFS15-4075PL-W	0.03	Class J	40	GV3P25	25	AWG 8	AWG 10
VFS15-4110PL-W	0.03	Class J	60	GV3P32	32	AWG 8	AWG 10
VFS15-4150PL-W	0.03	Class J	70	GV3P40 (*1)	40	AWG 6	AWG 10

(*1) In case VFS15-4150PL-W with the circuit breaker, the Short Circuit Current Ratings (SCCR) is 65kA, not 100kA.

9.2.4 Motor thermal protection

Select the electronic thermal protection characteristics that fit with the ratings and characteristics of the motor. (Refer to section 5.6)
In case of multi motor operation with one inverter, thermal relay should be connected to each motor.

10. Peripheral devices

⚠ Warning	
Mandatory action	• When using switchgear for the inverter, it must be installed in a cabinet. Failure to do so can lead to risk of electric shock.
Be Grounded	• Ground must be connected securely. If the ground is not securely connected, it could lead to electric shock or fire.

10.1 Selection of wiring materials and devices

■ Selection of wire size

Voltage class	Applicable motor (kW)	Wire size (mm²) Note 4)							
		Power circuit Note 1) Note 5)						DC Reactor (Optional)	
		Input				Output			
		without DCL		with DCL					
		IEC Compliant	For Japan *1	IEC Compliant	For Japan *1	IEC Compliant	For Japan *1	IEC Compliant	For Japan *1
3 phase 240V class	0.4	1.5	2.0	1.5	2.0	1.5	2.0	1.5	2.0
	0.75	1.5	2.0	1.5	2.0	1.5	2.0	1.5	2.0
	1.5	1.5	2.0	1.5	2.0	1.5	2.0	1.5	2.0
	2.2	2.5	2.0	1.5	2.0	1.5	2.0	1.5	2.0
	4.0	4.0	2.0	2.5	2.0	2.5	2.0	4.0	2.0
	5.5	10	5.5	4.0	2.0	6.0	3.5	6.0	3.5
	7.5	16	8.0	6.0	3.5	10	3.5	10	5.5
	11	25	14	10	5.5	16	8.0	16	8.0
	15	35	22	16	14	25	14	25	14
	18.5	50	22	25	14	35	14	35	22
1 phase 240V class	0.2	1.5	2.0	1.5	2.0	1.5	2.0	1.5	2.0
	0.4	1.5	2.0	1.5	2.0	1.5	2.0	1.5	2.0
	0.75	1.5	2.0	1.5	2.0	1.5	2.0	1.5	2.0
	1.5	2.5	2.0	2.5	2.0	1.5	2.0	2.5	2.0
	2.2	4.0	2.0	4.0	2.0	1.5	2.0	4.0	2.0
	3.0	4.0	2.0	4.0	2.0	1.5	2.0	4.0	2.0
3 phase 500V class	0.4	1.5	2.0	1.5	2.0	1.5	2.0	1.5	2.0
	0.75	1.5	2.0	1.5	2.0	1.5	2.0	1.5	2.0
	1.5	1.5	2.0	1.5	2.0	1.5	2.0	1.5	2.0
	2.2	1.5	2.0	1.5	2.0	1.5	2.0	1.5	2.0
	4.0	2.5	2.0	1.5	2.0	1.5	2.0	1.5	2.0
	5.5	4.0	2.0	1.5	2.0	2.5	2.0	2.5	2.0
	7.5	6.0	3.5	2.5	2.0	2.5	2.0	4.0	2.0
	11	10	5.5	4.0	2.0	6.0	3.5	6.0	3.5
	15	16	8.0	6.0	3.5	10	3.5	10	5.5
	18.5	16	8.0	10	5.5	10	5.5	16	8.0

Voltage class	Applicable motor (kW)	Wire size (mm^2) Note 4)			
		Braking resistor (optional)		Grounding cable	
		IEC Compliant	For Japan *1	IEC Compliant	For Japan *1
3 phase 240V class	0.4	1.5	2.0	2.5	2.0
	0.75	1.5	2.0	2.5	2.0
	1.5	1.5	2.0	2.5	2.0
	2.2	1.5	2.0	2.5	2.0
	4.0	2.5	2.0	4.0	3.5
	5.5	4.0	2.0	10	5.5
	7.5	6.0	3.5	16	5.5
	11	16	5.5	16	8.0
	15	25	14	16	8.0
	18.5	25	14	25	8.0
1 phase 240V class	0.2	1.5	2.0	2.5	2.0
	0.4	1.5	2.0	2.5	2.0
	0.75	1.5	2.0	2.5	2.0
	1.5	1.5	2.0	2.5	2.0
	2.2	1.5	2.0	4.0	3.5
	3.0	1.5	2.0	4.0	3.5
3 phase 500V Class	0.4	1.5	2.0	2.5	2.0
	0.75	1.5	2.0	2.5	2.0
	1.5	1.5	2.0	2.5	2.0
	2.2	1.5	2.0	2.5	2.0
	4.0	1.5	2.0	2.5	2.0
	5.5	1.5	2.0	4.0	3.5
	7.5	2.5	2.0	6.0	3.5
	11	4.0	2.0	10	5.5
	15	6.0	3.5	16	5.5
	18.5	10	5.5	16	5.5

*1: For Japan: JEAC8001-2005 compliant

Note 1: Sizes of the wires connected to the input terminals R/L1, S/L2 and T/L3 (Single-phase models are R/L1 and S/L2/N) and the output terminals U/T1, V/T2 and W/T3 when the length of each wire does not exceed 30m. If there is a need to bring the inverter into UL compliance, use wires specified in chapter 9.

Note 2: For the control circuit, use shielded wires 0.75 mm^2 or more in diameter.

Note 3: For grounding, use wires with a size equal to or larger than the above.

Note 4: The wire sizes specified in the above table apply to HIV wires (copper wires shielded with an insulator with a maximum allowable temperature of 75°C) used at an ambient temperature of 50°C or less.

Note 5: In case of AUL=2 setting, contact your Toshiba distributor for wire size.

■ Selection of wiring devices

Voltage class	Applicable motor (kW)	Input current (A)		Molded case circuit breaker (MCCB) Earth leakage circuit breaker (ELCB)		Magnetic contactor (MC) Note 2) Note 3)	
		Without DCL	With DCL	Rated current (A)		Rated current (A)	
				Without DCL	With DCL	Without DCL	With DCL
3 phase 240V class	0.4	3.6	1.8	5	5	20	20
	0.75	6.3	3.4	10	5	20	20
	1.5	11.1	6.5	15	10	20	20
	2.2	14.9	9.2	20	15	20	20
	4.0	23.8	15.9	30	20	32	20
	5.5	35.6	21.5	50	30	50	32
	7.5	46.1	28.9	60	40	60	32
	11	63.1	41.5	100	60	80	50
	15	82.1	55.7	125	75	100	60
	18.5	89.1	70.0	125	100	100	80
1 phase 240V class	0.2	3.4	2.0	5	5	20	20
	0.4	5.9	4.0	10	5	20	20
	0.75	10.0	7.6	15	10	20	20
	1.5	17.8	14.6	30	20	32	20
	2.2	24.0	20.1	30	30	32	32
	3.0	24.0	23.6	30	30	32	32
3 phase 500V class Note 6)	0.4	2.1	0.9	5	5	20	20
	0.75	3.6	1.8	5	5	20	20
	1.5	6.4	3.4	10	5	20	20
	2.2	8.8	4.8	15	10	20	20
	4.0	13.7	8.3	20	15	20	20
	5.5	20.7	11.2	30	15	32	20
	7.5	26.6	15.1	40	20	32	20
	11	36.6	21.7	50	30	50	32
	15	47.7	29.0	60	40	60	32
	18.5	52.7	36.3	75	50	60	50

The recommended molded case circuit breaker (MCCB) must be connected to primary side of each inverter to protect the wiring system.

10

Note 1: Selections for use the Toshiba 4-pole standard motor with power supply voltage of 200V/ 400 - 50Hz.

Note 2: Be sure to attach a surge absorber to the exciting coil of the relay and the magnetic contactor.

Note 3: When using the auxiliary contacts 2a of the magnetic contactor MC for the control circuit, connect the contacts 2a in parallel to increase reliability.

Note 4: When a motor is driven by commercial power supply using commercial power supply / inverter switching circuit, use a magnetic contactor appropriated AC-3 class the motor rated current.

Note 5: Select an MCCB with a current breaking rating appropriate to the capacity of the power supply, because short-circuit currents vary greatly depending on the capacity of the power supply and the condition of the wiring system. The MCCB, MC and ELCB in this table were selected, on the assumption that a power supply with a normal capacity would be used.

Note 6: For the operation and control circuits, regulate the voltage at 200V to 240V with a step-down transformer for 500V class.

Note 7: In case of AUL=2 setting, be sure to select the wiring device for 1 rating up motor.

Note 8: Regarding influence of leakage current, refer to section 1.4.3.

10.2 Installation of a magnetic contactor

If using the inverter without installing a magnetic contactor (MC) in the primary circuit, use an MCCB (with a power cut off device) to open the primary circuit when the inverter protective circuit is activated.
When using an optional braking resistor, install a magnetic contactor (MC) or molded-case circuit breaker with a power cutoff device on the primary power supply of the inverter, so that the power circuit opens when the failure detection relay (FL) in the inverter or the externally installed overload relay is actuated.

■ Magnetic contactor in the primary circuit

To detach the inverter from the power supply in any of the following cases, insert a magnetic contactor (primary-side magnetic contactor) between the inverter and the power supply.

(1) If the motor overload relay is tripped
(2) If the protective detector (FL) built into the inverter is activated
(3) In the event of a power failure (for prevention of auto-restart)
(4) If the resistor protective relay is tripped when a braking resistor (option) is used

When using the inverter with no magnetic contactor (MC) on the primary side, install a molded-case circuit breaker with a voltage tripping coil instead of an MC and adjust the circuit breaker so that it will be tripped if the protective relay referred to above is activated. To detect a power failure, use an undervoltage relay or the like.

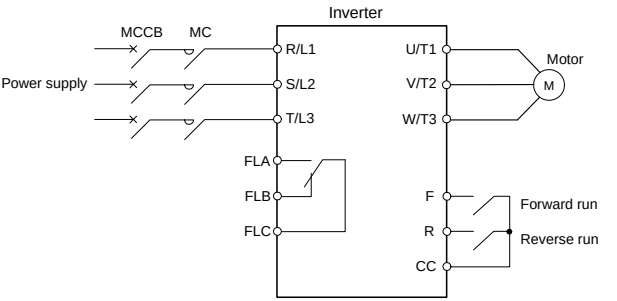

Example of connection of a magnetic contactor in the primary circuit

Notes on wiring

- When frequently switching between start and stop, do not use the magnetic contactor on the primary side as an on-off switch for the inverter.
  Instead, stop and start the inverter by using terminals F and CC (forward run) or R and CC (reverse run).
- Be sure to attach a surge absorber to the exciting coil of the magnetic contactor (MC).

■ Magnetic contactor in the secondary circuit

A magnetic contactor may be installed on the secondary side to switch controlled motors or supply commercial power to the load when the inverter is out of operation.

Notes on wiring

- Be sure to interlock the magnetic contactor on the secondary side with the power supply to prevent commercial power from being applied to the inverter output terminals.
- When installing a magnetic contactor (MC) between the inverter and the motor, avoid turning the magnetic contactor on or off during operation. Turning the magnetic contactor on or off during operation causes a current to rush into the inverter which could lead to malfunction.

10.3 Installation of an overload relay

1) This inverter has an electronic-thermal overload protective function.
   In the following cases, however, an overload relay suitable for the adjustment of the motor electronic thermal protection level (thr) and appropriate to the motor used should be installed between the inverter and the motor.
   - When using a motor with a current rating different to that of the corresponding Toshiba general-purpose motor
   - When operating a single motor with an output smaller than that of the applicable standard motor or more than one motor simultaneously.
2) When using this inverter to operate a constant-torque motor, such as the Toshiba VF motor, adjust the protection characteristic of the electronic thermal protection unit (OLM) to the VF motor use.
3) It is recommended to use a motor with a thermal relay embedded in the motor coil to give sufficient protection to the motor, especially when it runs in a low-speed range.

10.4 Optional external devices

The following external devices are optionally available for this inverter series.

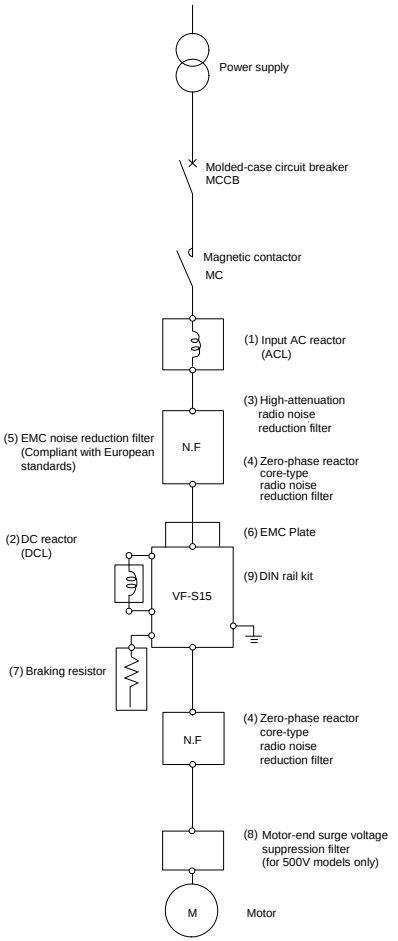

(10) Parameter writer : RKP002Z
PWU003Z
(11) Extension panel : RKP007Z
(12) Remote control panel : CBVR-7B1
(13) Frequency meter : QS60T
(14) FRH kit : FRH KIT
(15) USB communication converter : USB001Z
(16) CC-Link communication option : CCL003Z
(17) PROFIBUS DP communication option :
PDP003Z
(18) DeviceNet communication option : DEV003Z
(19) EtherNet / IP-Modbus TCP communication option
: IPE002Z
(20) EtherCAT communication option : IPE003Z
(21) CANopen communication option : CAN001Z
: CAN002Z
: CAN003Z
(22) Communication option adaptor : SBP009Z

■ How to mount the option

1) Mount the option to the option adapter.

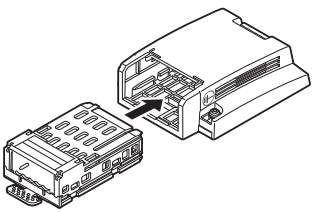

Note: Insert the option straightly and slowly along the guide inside option adapter. Neglect of this will result in the damage to the connector pin.

2) Unlock the front cover and open it.

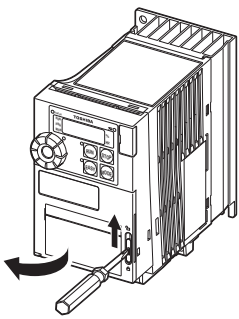

3) Remove the option connector cover on the front cover from the back side.

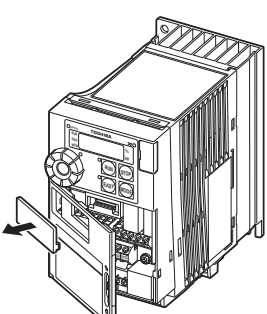

4) Close the front cover and lock it.

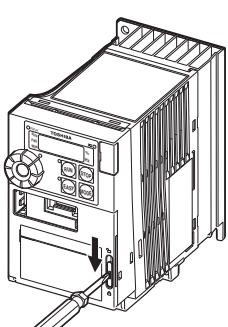

5) Hang the hook of the option adapter on the bottom of the front cover and mount it to the inverter.

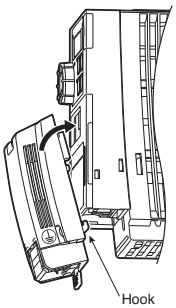

Side view

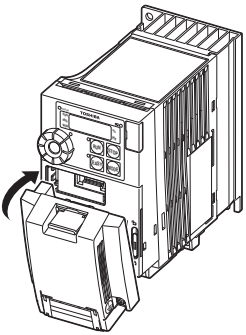

■ The option is mounted

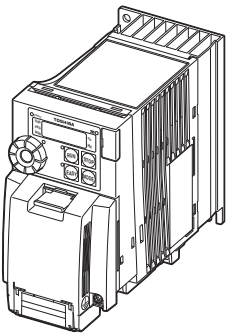

After mounting the option adapter, the depth increases 25.5mm.

■ How to wire the grounding cable

Wire the attached grounding cable to grounding terminal of inverter.

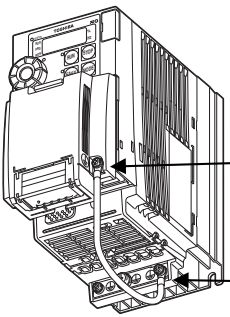

11. Table of parameters and data

11.1 Frequency setting parameter

Title	Function	Unit	Minimum setting unit Panel/Communication	Adjustment range	Default setting	User setting	Reference
FC	Operation frequency of operation panel	Hz	0.1/0.01	LL-UL	0.0		3.2.2

11.2 Basic parameters

- Five navigation functions

Title	Communication No.	Function	Unit	Minimum setting unit Panel/Communication	Adjustment range	Default setting	User setting	Reference
AUH	-	History function	-	-	Displays parameters in groups of five in the reverse order to that in which their settings were changed. * (Possible to edit)	-		6.1.1
AUA	0090	Application easy setting *10	-	-	0: - 1: Initial easy setting 2: Conveyor 3: Material handling 4: Hoisting 5: Fan 6: Pump 7: Compressor	0		6.1.2
AUF	0093	Guidance function	-	-	0: - 1: - 2: Preset speed guidance 3: - 4: Motor 1 & 2 switching operation guidance 5: Motor constant setting guidance 6: -	0		6.1.3
AUL	0094	Overload characteristic selection	-	-	0: - 1: Constant torque characteristic (150%-60s) 2: Variable torque characteristic (120%-60s)	0		5.6 6.18
AU1	0000	Automatic acceleration/ deceleration	-	-	0: Disabled (manual setting) 1: Automatic 2: Automatic (only at acceleration)	0		5.2 6.1.4
AU2	0001	Torque boost setting macro function	-	-	0: - 1: Automatic torque boost + auto-tuning 2: Vector control + auto-tuning 3: Energy saving + auto-tuning	0		6.1.5

*10: Refer to section 11.8 about parameters that are set by this parameter.

- Basic parameters

Title	Communication No.	Function	Unit	Minimum setting unit Panel/Communication	Adjustment range	Default setting	User setting	Reference
CMOd	0003	Command mode selection	-	-	0: Terminal block 1: Panel keypad (including extension panel) 2: RS485 communication 3: CANopen communication 4: Communication option	1		3.2 6.2.1 7.3
FMOd	0004	Frequency setting mode selection 1	-	-	0: Setting dial 1 (including extension panel) (save even if power is off) 1: Terminal VIA 2: Terminal VIB 3: Setting dial 2 (including extension panel) (press in center to save) 4: RS485 communication 5: UP/DOWN from external logic input 6: CANopen communication 7: Communication option 8: Terminal VIC 9, 10: - 11: Pulse train input 12, 13: - 14: Sr0	0		3.2 6.2.1 6.10.1 5.8 7.3
FMSL	0005	Meter selection	-	-	0: Output frequency 1: Output current 2: Frequency command value 3: Input voltage (DC detection) 4: Output voltage (command value) 5: Input power 6: Output power 7: Torque 8: - 9: Motor cumulative load factor 10: Inverter cumulative load factor 11: PBR (Braking resistor) cumulative load factor 12: Stator frequency 13: VIA input value 14: VIB input value 15: Fixed output 1 (output current 100% equivalent) 16: Fixed output 2 (output current 50% equivalent) 17: Fixed output 3 (Other than the output current) 18: RS485 communication data 19: For adjustments (FM set value is displayed.) 20: VIC input value 21, 22: - 23: PID feedback value 24: Integral input power 25: Integral output power	0		5.1
FM	0006	Meter adjustment gain	-	-	-	-		
Fr	0008	Forward/reverse run selection (Panel keypad)	-	-	0: Forward run 1: Reverse run 2: Forward run (F/R switching on extension panel) 3: Reverse run (F/R switching on extension panel)	0		6.2.2

Title	Communication No.	Function	Unit	Minimum setting unit Panel/Communication	Adjustment range	Default setting	User setting	Reference
ACC	0009	Acceleration time 1	s	0.1/0.1	0.0-3600 (360.0) *8	10.0		5.2
dEC	0010	Deceleration time 1	s	0.1/0.1	0.0-3600 (360.0) *8	10.0		
FH	0011	Maximum frequency	Hz	0.1/0.01	30.0-500.0	80.0		5.3
UL	0012	Upper limit frequency	Hz	0.1/0.01	0.5-FH	*1		5.4
LL	0013	Lower limit frequency	Hz	0.1/0.01	0.0-UL	0.0		
uL	0014	Base frequency 1	Hz	0.1/0.01	20.0-500.0	*1		5.5
uLu	0409	Base frequency voltage 1	V	1/0.1	50-330 (240V class) 50-660 (500V class)	*1		5.5 6.19.6
Pt	0015	V/F control mode selection	-	-	0: V/F constant 1: Variable torque 2: Automatic torque boost control 3: Vector control 4: Energy-saving 5: Dynamic energy-saving (For fan and pump) 6: PM motor control 7: V/F 5-point setting 8: -	*1		6.3
ub	0016	Torque boost value 1	%	0.1/0.1	0.0-30.0	*2		6.4
tHr	0600	Motor electronic-thermal protection level 1	% (A)	1/1	10-100 *12	100		5.6 6.29.1
OLM	0017	Electronic-thermal protection characteristic selection	-	-	Setting / Overload protection / OL stall 0: Standard motor, valid, invalid 1: Standard motor, valid, valid 2: Standard motor, invalid, invalid 3: Standard motor, invalid, valid 4: VF motor, valid, invalid 5: VF motor, valid, valid 6: VF motor, invalid, invalid 7: VF motor, invalid, valid	0		5.6
Sr0	0030	Preset-speed frequency 0	Hz	0.1/0.01	LL-UL	0.0		5.7
Sr1	0018	Preset-speed frequency 1	Hz	0.1/0.01	LL-UL	0.0		
Sr2	0019	Preset-speed frequency 2	Hz	0.1/0.01	LL-UL	0.0		
Sr3	0020	Preset-speed frequency 3	Hz	0.1/0.01	LL-UL	0.0		
Sr4	0021	Preset-speed frequency 4	Hz	0.1/0.01	LL-UL	0.0		
Sr5	0022	Preset-speed frequency 5	Hz	0.1/0.01	LL-UL	0.0		
Sr6	0023	Preset-speed frequency 6	Hz	0.1/0.01	LL-UL	0.0		
Sr7	0024	Preset-speed frequency 7	Hz	0.1/0.01	LL-UL	0.0		
FPid	0025	Process input value of PID control	Hz	0.1/0.01	F368 - F367	0.0		6.24

*1: Default setting values vary depending on the setup menu setting. Refer to section 11.5.

*2: Default setting values vary depending on the capacity. Refer to section 11.4.

*8: These parameters can be changed to 0.01s unit by setting F519= 1.

*12: When F701= 1, adjustment range is 100%=rated current, or 100%=200V(240V class)/ 400V(500V class).

Title	Communication No.	Function	Unit	Minimum setting unit Panel/Communication	Adjustment range	Default setting	User setting	Reference
tYP	0007	Default setting	-	-	0: - 1: 50Hz default setting 2: 60Hz default setting 3: Default setting 1 (Initialization) 4: Trip record clear 5: Cumulative operation time clear 6: Initialization of type information 7: Save user setting parameters 8. Load user setting parameters 9. Cumulative fan operation time record clears 10, 11: - 12: Number of starting clear 13: Default setting 2 (Complete initialization)	0		4.3.2
SEt	0099	Checking the region setting * 5	-	-	0: Start setup menu 1: Japan (read only) 2: North America (read only) 3: Asia (read only) 4: Europe (read only)	*1		4.4
PSEL	0050	EASY key mode selection	-	-	0: Standard setting mode at power on 1: Easy setting mode at power on 2: Easy setting mode only	0		4.5
F1--	-	Extended parameter starting at 100	-	-	-	-	-	4.2.2
F2--	-	Extended parameter starting at 200	-	-	-	-	-	
F3--	-	Extended parameter starting at 300	-	-	-	-	-	
F4--	-	Extended parameter starting at 400	-	-	-	-	-	
F5--	-	Extended parameter starting at 500	-	-	-	-	-	
F6--	-	Extended parameter starting at 600	-	-	-	-	-	
F7--	-	Extended parameter starting at 700	-	-	-	-	-	
F8--	-	Extended parameter starting at 800	-	-	-	-	-	
F9--	-	Extended parameter starting at 900	-	-	-	-	-	
A---	-	Extended parameter starting at A	-	-	-	-	-	
C---	-	Extended parameter starting at C	-	-	-	-	-	
GrU	-	Automatic edit function	-	-	-	-	-	4.3.1

*1: Default setting values vary depending on the setup menu setting. Refer to section 11.5.

*5: Set “0” to activate the setup menu. Refer to section 11.5 about setting contents selected in setup menu.

11.3 Extended parameters

- Input/output parameters 1

Title	Communication No.	Function	Unit	Minimum setting unit Panel/Communication	Adjustment range	Default setting	User setting	Reference
F100	0100	Low-speed signal output frequency	Hz	0.1/0.01	0.0-FH	0.0		6.5.1
F101	0101	Speed reach setting frequency	Hz	0.1/0.01	0.0-FH	0.0		6.5.3
F102	0102	Speed reach detection band	Hz	0.1/0.01	0.0-FH	2.5		6.5.2 6.5.3
F104	0104	Always active function selection 1	-	-	0-7, 10-153: *6 8,9: -	0 (No function)		6.7.1
F105	0105	Priority selection (Both F and R are ON)	-	-	0: Reverse 1: Deceleration Stop	1		6.6.1
F107	0107	Analog input terminal selection (VIB)	-	-	0: 0-+10V 1: -10-+10V	0		6.6.2 6.10.2 7.3
F108	0108	Always active function selection 2	-	-	0-7, 10-153: *6 8,9: -	0 (No function)		6.7.1
F109	0109	Analog/logic input selection (VIA/VIB)	-	-	0: VIA - analog input VIB - analog input 1: VIA - analog input VIB - contact input 2: - 3: VIA - contact input (Sink) VIB - contact input 4: VIA - contact input (Source) VIB - contact input	0		6.6.3 6.7.2 6.10.2 7.2.1 7.3
F110	0110	Always active function selection 3	-	-	0-7, 10-153: *6 8,9: -	6 (ST)		6.7.1
F111	0111	Input terminal selection 1A (F)	-	-	0-203 *6	2 (F)		6.7.2 7.2.1
F112	0112	Input terminal selection 2A (R)	-	-		4 (R)		
F113	0113	Input terminal selection 3A (RES)	-	-		8 (RES)		
F114	0114	Input terminal selection 4A (S1)	-	-		10 (SS1)		
F115	0115	Input terminal selection 5 (S2)	-	-		12 (SS2)		
F116	0116	Input terminal selection 6 (S3)	-	-		14 (SS3)		
F117	0117	Input terminal selection 7 (VIB)	-	-		16 (SS4)		
F118	0118	Input terminal selection 8 (VIA)	-	-	8-55 *6	24 (AD2)		

*6: Refer to section 11.6 for details about input terminal function.

Title	Communication No.	Function	Unit	Minimum setting unit Panel/Communication	Adjustment range	Default setting	User setting	Reference
F130	0130	Output terminal selection 1A (RY-RC)	-	-	0-255 *7	4 (LOW)		6.7.3 7.2.2
F131	0131	Output terminal selection 2A (OUT)	-	-		6 (RCH)		
F132	0132	Output terminal selection 3 (FL)	-	-		10 (FL)		
F137	0137	Output terminal selection 1B (RY-RC)	-	-		255 (always ON)		
F138	0138	Output terminal selection 2B (OUT)	-	-		255 (always ON)		
F139	0139	Output terminal logic selection (RY-RC, OUT)	-	-	0: F130 and F137 F131 and F138 1: F130 or F137 F131 and F138 2: F130 and F137 F131 or F138 3: F130 or F137 F131 or F138	0		
F144	0144	Input terminal response time	ms	1/1	1-1000	1		6.7.2 7.2.1
F146	0146	Logic input / pulse train input selection (S2)	-	-	0: Logic input 1: Pulse train input	0		6.7.2 6.10.5 7.2.1
F147	0147	Logic input / PTC input selection (S3)	-	-	0: Logic input 1: PTC input	0		2.3.2 6.7.2 6.29.16 7.2.1
F151	0151	Input terminal selection 1B (F)	-	-	0-203 *6	0		6.7.2 7.2.1
F152	0152	Input terminal selection 2B (R)	-	-		0		
F153	0153	Input terminal selection 3B (RES)	-	-		0		
F154	0154	Input terminal selection 4B (S1)	-	-		0		
F155	0155	Input terminal selection 1C (F)	-	-		0		
F156	0156	Input terminal selection 2C (R)	-	-		0		
F167	0167	Frequency command agreement detection range	Hz	0.1/0.01	0.0-FH	2.5		6.24

*6: Refer to section 11.6 for details about input terminal function.

*7: Refer to section 11.7 for details about output terminal function.

- Basic parameter 2

Title	Communication No.	Function	Unit	Minimum setting unit Panel/Communication	Adjustment range	Default setting	User setting	Reference
F170	0170	Base frequency 2	Hz	0.1/0.01	20.0-500.0	*1		6.8.1
F171	0171	Base frequency voltage 2	V	1/0.1	50-330 (240V class) 50-660 (500V class)	*1		
F172	0172	Torque boost value 2	%	0.1/0.1	0.0-30.0	*2		
F173	0173	Motor electronic-thermal protection level 2	% (A)	1/1	10-100 *12	100		5.6 6.8.1 6.29.1
F185	0185	Stall prevention level 2	% (A)	1/1	10-199, *12 200 (disabled)	150		6.8.1 6.29.2
F190	0190	V/f 5-point setting VF1 frequency	Hz	0.1/0.01	0.0-FH	0.0		6.3 6.9
F191	0191	V/f 5-point setting VF1 voltage	% (V)	0.1/0.1	0.0-125.0 *12	0.0		
F192	0192	V/f 5-point setting VF2 frequency	Hz	0.1/0.01	0.0-FH	0.0		
F193	0193	V/f 5-point setting VF2 voltage	% (V)	0.1/0.1	0.0-125.0 *12	0.0		
F194	0194	V/f 5-point setting VF3 frequency	Hz	0.1/0.01	0.0-FH	0.0		
F195	0195	V/f 5-point setting VF3 voltage	% (V)	0.10.1	0.0-125.0 *12	0.0		
F196	0196	V/f 5-point setting VF4 frequency	Hz	0.1/0.01	0.0-FH	0.0		
F197	0197	V/f 5-point setting VF4 voltage	% (V)	0.1/0.1	0.0-125.0 *12	0.0		
F198	0198	V/f 5-point setting VF5 frequency	Hz	0.1/0.01	0.0-FH	0.0		
F199	0199	V/f 5-point setting VF5 voltage	% (V)	0.1/0.1	0.0-125.0 *12	0.0		

- Frequency parameters

Title	Communication No.	Function	Unit	Minimum setting unit Panel/Communication	Adjustment range	Default setting	User setting	Reference
F200	0200	Frequency priority selection	-	-	0: FMOd (Switchable to F207 by terminal input) 1: FMOd (Switchable to F207 at 1.0Hz or less of designated frequency)	0		5.8 6.10.1
F201	0201	VIA input point 1 setting	%	1/1	0-100	0		6.10.2 7.3
F202	0202	VIA input point 1 frequency	Hz	0.1/0.01	0.0-500.0	0.0		
F203	0203	VIA input point 2 setting	%	1/1	0-100	100		
F204	0204	VIA input point 2 frequency	Hz	0.1/0.01	0.0-500.0	*1		
F205	0205	VIA input point 1 rate	%	1/0.01	0-250	0		6.31
F206	0206	VIA input point 2 rate	%	1/0.01	0-250	100		
F207	0207	Frequency setting mode selection 2	-	-	0-14 (Same as FMOd)	1		5.8 6.10.1

*1: Default setting values vary depending on the setup menu setting. Refer to section 11.5.

*2: Default setting values vary depending on the capacity. Refer to section 11.4.

*12: When F701=1, adjustment range is 100%=rated current, or 100%=200V(240V class)/ 400V(500V class).

Title	Communication No.	Function	Unit	Minimum setting unit Panel/Communication	Adjustment range	Default setting	User setting	Reference
F209	0209	Analog input filter	ms	1/1	2-1000	64		6.10.2 7.3
F210	0210	VIB input point 1 setting	%	1/1	-100-+100	0		
F211	0211	VIB input point 1 frequency	Hz	0.1/0.01	0.0-500.0	0.0		
F212	0212	VIB input point 2 setting	%	1/1	-100-+100	100		
F213	0213	VIB input point 2 frequency	Hz	0.1/0.01	0.0-500.0	*1		
F214	0214	VIB input point 1 rate	%	1/0.01	-250-+250	0		6.31 6.32
F215	0215	VIB input point 2 rate	%	1/0.01	-250-+250	100		
F216	0216	VIC input point 1 setting	%	1/1	0-100	20		6.10.2 7.3
F217	0217	VIC input point 1 frequency	Hz	0.1/0.01	0.0-500.0	0.0		
F218	0218	VIC input point 2 setting	%	1/1	0-100	100		
F219	0219	VIC input point 2 frequency	Hz	0.1/0.01	0.0-500.0	*1		
F220	0220	VIC input point 1 rate	%	1/0.01	0-250	0		6.31
F221	0221	VIC input point 2 rate	%	1/0.01	0-250	100		
F239	0239	Factory specific coefficient 2A	-	-	-	-		* 3
F240	0240	Starting frequency	Hz	0.1/0.01	0.1-10.0	0.5		6.11.1
F241	0241	Operation starting frequency	Hz	0.1/0.01	0.0-FH	0.0		6.11.2
F242	0242	Operation starting frequency hysteresis	Hz	0.1/0.01	0.0-FH	0.0		
F243	0243	Stop frequency setting	Hz	0.1/0.01	0.0: Same as F240 0.1-30.0	0.0		6.11.1
F249	0249	PWM carrier frequency during DC braking	kHz	0.1/0.1	2.0-16.0	4.0		6.12.1
F250	0250	DC braking starting frequency	Hz	0.1/0.01	0.0-FH	0.0		
F251	0251	DC braking current	%(A)	1/1	0-100 *12	50		
F252	0252	DC braking time	s	0.1/0.1	0.0-25.5	1.0		
F254	0254	Motor shaft fixing control	-	-	0: Disabled 1: Enabled (after DC braking)	0		6.12.2
F256	0256	Time limit for lower-limit frequency operation	s	0.1/0.1	0: Disabled 0.1-600.0	0.0		6.13
F257	0257	Factory specific coefficient 2B	-	-	-	-		* 3
F258	0258	Factory specific coefficient 2C	-	-	-	-		* 3
F259	0259	Lower limit frequency reach time limit at start-up	s	0.1/0.1	0.0: Disabled 0.1-600.0	0.0		6.13

*1: Default setting values vary depending on the setup menu setting. Refer to section 11.5.

*3: Factory specific coefficient parameters are manufacturer setting parameters. Do not change the value of these parameters.

*12: When F701=1, adjustment range is 100%=rated current, or 100%=200V(240V class)/ 400V(500V class).

Title	Communication No.	Function	Unit	Minimum setting unit Panel/Communication	Adjustment range	Default setting	User setting	Reference
F260	0260	Jog run frequency	Hz	0.1/0.01	F240 – 20.0	5.0		6.14
F261	0261	Jog run stopping pattern	-	-	0: Deceleration stop 1: Coast stop 2: DC braking stop	0		
F262	0262	Panel jog run operation mode	-	-	0: Invalid 1: Valid	0		
F264	0264	External logic input - UP response time	s	0.1/0.1	0.0-10.0	0.1		6.10.4
F265	0265	External logic input - UP frequency steps	Hz	0.1/0.01	0.0-FH	0.1		
F266	0266	External logic input - DOWN response time	s	0.1/0.1	0.0-10.0	0.1		
F267	0267	External logic input - DOWN frequency steps	Hz	0.1/0.01	0.0-FH	0.1		
F268	0268	Initial value of UP/DOWN frequency	Hz	0.1/0.01	LL - UL	0.0		
F269	0269	Change of the initial value of UP/DOWN frequency	-	-	0: Not changed 1: Setting of F268 changed when power is turned off	1		
F270	0270	Jump frequency 1	Hz	0.1/0.01	0.0-FH	0.0		6.15
F271	0271	Jumping width 1	Hz	0.1/0.01	0.0-30.0	0.0		
F272	0272	Jump frequency 2	Hz	0.1/0.01	0.0-FH	0.0		
F273	0273	Jumping width 2	Hz	0.1/0.01	0.0-30.0	0.0		
F274	0274	Jump frequency 3	Hz	0.1/0.01	0.0-FH	0.0		
F275	0275	Jumping width 3	Hz	0.1/0.01	0.0-30.0	0.0		
F287	0287	Preset-speed frequency 8	Hz	0.1/0.01	LL-UL	0.0		5.7
F288	0288	Preset-speed frequency 9	Hz	0.1/0.01	LL-UL	0.0		
F289	0289	Preset-speed frequency 10	Hz	0.1/0.01	LL-UL	0.0		
F290	0290	Preset-speed frequency 11	Hz	0.1/0.01	LL-UL	0.0		
F291	0291	Preset-speed frequency 12	Hz	0.1/0.01	LL-UL	0.0		
F292	0292	Preset-speed frequency 13	Hz	0.1/0.01	LL-UL	0.0		
F293	0293	Preset-speed frequency 14	Hz	0.1/0.01	LL-UL	0.0		
F294	0294	Preset-speed frequency 15	Hz	0.1/0.01	LL-UL	0.0		5.7 6.30
F295	0295	Bumpless operation selection	-	-	0: Disabled 1: Enabled	0		6.16
F297	0297	Low voltage operation upper limit frequency	Hz	0.1/0.01	0.0: Disabled 0.1-30.0	0.0		6.17
F298	0298	Low voltage operation DC voltage	Vdc	1/0.1	240V class: 72(96)-168 *11 500V class: 72(120)-336 *11	120		

*3: Factory specific coefficient parameters are manufacturer setting parameters. Do not change the value of these parameters.

*11: 240V class : 4.0kW or less : 72 to 168V, 5.5kW or more : 96 to 168V.

500V class : 4.0kW or less : 72 to 336V, 5.5kW or more : 120 to 336V.

- Operation mode parameters

Title	Communication No.	Function	Unit	Minimum setting unit Panel/Communication	Adjustment range	Default setting	User setting	Reference
F300	0300	PWM carrier frequency	kHz	0.1/0.1	2.0 -16.0	12.0		6.18
F301	0301	Auto-restart control selection	-	-	0: Disabled 1: At auto-restart after momentary stop 2: At ST terminal off and on 3: 1+2 4: At start-up	0		5.9
F302	0302	Regenerative power ride-through control (Deceleration stop)	-	-	0: Disabled 1: Regenerative power ride-through control 2: Deceleration stop during power failure 3: Synchronized acceleration / deceleration (signal) 4: Synchronized acceleration / deceleration (signal + power failure)	0		6.19.2
F303	0303	Retry selection (number of times)	Times	1/1	0: Disabled 1-10	0		6.19.3
F304	0304	Dynamic braking selection	-	-	0: Disabled 1: Enabled, Resistor overload protection enabled 2: Enabled 3: Enabled, Resistor overload protection enabled (At ST terminal on) 4: Enabled (At ST terminal on)	0		6.19.4
F305	0305	Overvoltage limit operation (Deceleration stop mode selection)	-	-	0: Enabled 1: Disabled 2: Enabled (Quick deceleration control) 3: Enabled (Dynamic quick deceleration control)	2		6.19.5
F307	0307	Supply voltage correction (output voltage limitation)	-	-	0: Supply voltage uncorrected, output voltage limited 1: Supply voltage corrected, output voltage limited 2: Supply voltage uncorrected, output voltage unlimited 3: Supply voltage corrected, output voltage unlimited	*1		6.19.6
F308	0308	Dynamic braking resistance	Ω	0.1/0.1	1.0-1000	*2		6.19.4
F309	0309	Dynamic braking resistor capacity	kW	0.01/0.01	0.01-30.00	*2		
F310	0310	Factory specific coefficient 3A	-	-	-	-		* 3
F311	0311	Reverse-run prohibition	-	-	0: Forward/reverse run permitted 1: Reverse run prohibited 2: Forward run prohibited	0		6.19.7
F312	0312	Random mode	-	-	0: Disabled 1: Random mode 1 2: Random mode 2 3: Random mode 3	0		6.18
F314	0314	Factory specific coefficient 3B	-	-	-	-		* 3

*1: Default setting values vary depending on the setup menu setting. Refer to section 11.5.

*2: Default setting values vary depending on the capacity. Refer to section 11.4.

*3: Factory specific coefficient parameters are manufacturer setting parameters. Do not change the value of these parameters.

Title	Communication No.	Function	Unit	Minimum setting unit Panel/Communication	Adjustment range	Default setting	User setting	Reference
F316	0316	PWM carrier frequency control mode selection	-	-	0: Carrier frequency without reduction 1: Carrier frequency with automatic reduction 2: Carrier frequency without reduction Support for 500V models 3: Carrier frequency with automatic reduction. Support for 500V models	1		6.18
F317	0317	Synchronized deceleration time (time elapsed between start of deceleration to stop)	s	0.1/0.1	0.0-3600 (360.0)	2.0		6.19.2
F318	0318	Synchronized acceleration time (time elapsed between start of acceleration to achievement of specified speed)	s	0.1/0.1	0.0-3600 (360.0)	2.0		
F319	0319	Regenerative over-excitation upper limit	%	1/1	100-160	*1		6.19.5
F320	0320	Droop gain	%	0.1/0.1	0.0-100.0	0.0		6.20
F323	0323	Droop insensitive torque band	%	1/1	0-100	10		
F324	0324	Droop output filter	-	0.1/0.1	0.1-200.0	100.0		
F325	0325	Brake releasing waiting time	s	0.01/0.01	0.00-2.50	0.00		6.22.1
F326	0326	Brake releasing small current detection level	% (A)	1/1	0-100 *12	0		
F327	0327	Factory specific coefficient 3C	-	-	-	-		*3
F328	0328	Light-load high-speed operation selection	-	-	0:Disabled 1:High-speed operation speed set automatically (Power running at F command: Increase) 2:High-speed operation speed set automatically (Power running at R command: Increase) 3:High-speed operation speed set with F330 (Power running at F command: Increase) 4:High-speed operation speed set with F330 (Power running at R command: Increase)	0		6.21
F329	0329	Light-load high-speed learning function	-	-	0:No learning 1:Forward run learning 2:Reverse run learning	0		
F330	0330	Automatic light-load high-speed operation frequency	Hz	0.1/0.01	30.0-UL	*1		
F331	0331	Light-load high-speed operation switching lower limit frequency	Hz	0.1/0.01	5.0-UL	40.0		

*1: Default setting values vary depending on the setup menu setting. Refer to section 11.5.

*3: Factory specific coefficient parameters are manufacturer setting parameters. Do not change the value of these parameters.

*12: When F70 1= 1, adjustment range is 100%=rated current, or 100%=200V(240V class)/ 400V(500V class).

Title	Communication No.	Function	Unit	Minimum setting unit Panel/Communication	Adjustment range	Default setting	User setting	Reference
F332	0332	Light-load high-speed operation load waiting time	s	0.1/0.1	0.0-10.0	0.5		6.21
F333	0333	Light-load high-speed operation load detection time	s	0.1/0.1	0.0-10.0	1.0		
F334	0334	Light-load high-speed operation heavy load detection time	s	0.1/0.1	0.0-10.0	0.5		
F335	0335	Switching load torque during power running	%	1/0.01	-250- +250	50		
F336	0336	Heavy-load torque during power running	%	1/0.01	-250- +250	100		
F337	0337	Heavy-load torque during constant power running	%	1/0.01	-250- +250	50		
F338	0338	Switching load torque during regenerative braking	%	1/0.01	-250- +250	50		
F339	0339	Factory specific coefficient 3D	-	-	-	-		* 3
F340	0340	Creeping time 1	s	0.01/0.01	0.00-10.00	0.00		6.22.1
F341	0341	Braking mode selection	-	-	0: Disabled 1: Forward winding up 2: Reverse winding up 3: Horizontal operation	0		
F342	0342	Load portion torque input selection	-	-	0: Disabled 1: Terminal VIA 2: Terminal VIB 3: Terminal VIC 4: F343	4		
F343	0343	Hoisting torque bias input (valid only when F342=4)	%	1/0.01	-250- +250	100		
F344	0344	Lowering torque bias multiplier	%	1/0.01	0-100	100		
F345	0345	Brake release time	s	0.01/0.01	0.00-10.00	0.05		
F346	0346	Creeping frequency	Hz	0.1/0.01	F240 -20.0	3.0		
F347	0347	Creeping time 2	s	0.01/0.01	0.00-10.00	0.10		
F348	0348	Braking time learning function	-	1/1	0:Disabled 1: Learning (0 after adjustment)	0		
F349	0349	Acceleration/deceleration suspend function	-	1/1	0:Disabled 1:Parameter setting 2:Terminal input	0		6.23
F350	0350	Acceleration suspend frequency	Hz	0.1/0.01	0.0-FH	0.0		
F351	0351	Acceleration suspend time	s	0.1/0.1	0.0-10.0	0.0		
F352	0352	Deceleration suspend frequency	Hz	0.1/0.01	0.0-FH	0.0		
F353	0353	Deceleration suspend time	s	0.1/0.1	0.0-10.0	0.0		
F359	0359	PID control waiting time	s	1/1	0-2400	0		6.24
F360	0360	PID control	-	-	0: Disabled 1: Process type PID control 2: Speed type PID control	0		

Title	Communication No.	Function	Unit	Minimum setting unit Panel/Communication	Adjustment range	Default setting	User setting	Reference
F361	0361	Delay filter	s	0.1/0.1	0.0-25.0	0.1		6.24
F362	0362	Proportional gain	-	0.01/0.01	0.01-100.0	0.30		
F363	0363	Integral gain	s^{-1}	0.01/0.01	0.01-100.0	0.20		
F366	0366	Differential gain	s	0.01/0.01	0.00-2.55	0.00		
F367	0367	Process upper limit	Hz	0.1/0.01	0.0-FH	*1		
F368	0368	Process lower limit	Hz	0.1/0.01	0.0-F367	0.0		
F369	0369	PID control feedback signal selection	-	-	0: Disabled 1: Terminal VIA 2: Terminal VIB 3: Terminal VIC 4 to 6: -	0		
F372	0372	Process increasing rate (speed type PID control)	s	0.1/0.1	0.1-600.0	10.0		
F373	0373	Process decreasing rate (speed type PID control)	s	0.1/0.1	0.1-600.0	10.0		
F375	0375	Factory specific coefficient 3E	-	-	-	-		* 3
F376	0376	Factory specific coefficient 3F	-	-	-	-		
F378	0378	Number of pulse train input	pps	1/1	10-500	25		6.10.5
F380	0380	PID forward/reverse characteristics selection	-	-	0: Forward 1: Reverse	0		6.24
F382	0382	Hit and stop control	-	-	0: Disabled 1: Enabled 2: -	0		6.22.2
F383	0383	Hit and stop control frequency	Hz	0.1/0.01	0.1-30.0	5.0		
F384	0384	Factory specific coefficient 3G	-	-	-	-		* 3
F385	0385	Factory specific coefficient 3H	-	-	-	-		
F386	0386	Factory specific coefficient 3I	-	-	-	-		
F389	0389	PID control reference signal selection	-	-	0: FMOd/F207 selected 1: Terminal VIA 2: Terminal VIB 3: FPId 4: RS485 communication 5: UP/DOWN from external logic input 6: CANopen communication 7: Communication option 8: Terminal VIC 9, 10: - 11: Pulse train input	0		6.24
F390	0390	Factory specific coefficient 3J	-	-	-	-		* 3
F391	0391	Hysteresis for lower-limit frequency operation	Hz	0.1/0.01	0.0-UL	0.2		6.13
F394	0394	Factory specific coefficient 3K	-	-	-	-		* 3

*1: Default setting values vary depending on the setup menu setting. Refer to section 11.5.

*3: Factory specific coefficient parameters are manufacturer setting parameters. Do not change the value of these parameters.

- Torque boost parameters 1

Title	Communication No.	Function	Unit	Minimum setting unit Panel/Communication	Adjustment range	Default setting	User setting	Reference
F400	0400	Auto-tuning	-	-	0: Auto-tuning disabled 1: Initialization of F402 (after execution : 0) 2: Auto-tuning executed (after execution: 0) 3: - 4: Motor constant auto calculation (after execution: 0) 5: 4+2 (after execution: 0)	0		6.25
F401	0401	Slip frequency gain	%	1/1	0-250	70		
F402	0402	Automatic torque boost value	%	0.1/0.1	0.1-30.0	* 2		
F405	0405	Motor rated capacity	kW	0.01/0.01	0.01-22.00	* 2		
F412	0412	Motor specific coefficient 1	-	-	-	-		* 4
F415	0415	Motor rated current	A	0.01/0.01	0.01-100.0	* 2		6.25
F416	0416	Motor no-load current	%	1/1	10-90	* 2		
F417	0417	Motor rated speed	min-1	1/1	100-64000	*1		
F441	0441	Power running torque limit 1 level	%	1/1	0-249%, 250:Disabled	250		6.26.1
F443	0443	Regenerative braking torque limit 1 level	%	1/1	0-249%, 250:Disabled	250		
F444	0444	Power running torque limit 2 level	%	1/1	0-249%, 250:Disabled	250		
F445	0445	Regenerative braking torque limit 2 level	%	1/1	0-249%, 250:Disabled	250		
F451	0451	Acceleration/deceleration operation after torque limit	-	1/1	0: In sync with acceleration / deceleration 1: In sync with min. time	0		6.26.2
F452	0452	Power running stall continuous trip detection time	s	0.01/0.01	0.00-10.00	0.00		6.26.3
F454	0454	Constant output zone torque limit selection	-	-	0:Constant output limit 1:Constant torque limit	0		6.26.1
F458	0458	Motor specific coefficient 2	-	-	-	-		* 4
F459	0459	Load inertia moment ratio	Times	0.1/0.1	0.1-100.0	1.0		6.25
F460	0460	Motor specific coefficient 3	-	-	-	-		* 4
F461	0461	Motor specific coefficient 4	-	-	-	-		
F462	0462	Speed reference filter coefficient	-	-	0-100	35		6.25
F467	0467	Motor specific coefficient 5	-	-	-	-		* 4

*1: Default setting values vary depending on the setup menu setting. Refer to section 11.5.

*2: Default setting values vary depending on the capacity. Refer to section 11.4.

*4: Motor specific coefficient parameters are manufacturer setting parameters. Do not change the value of these parameters.

- Input/output parameters 2

Title	Communication No.	Function	Unit	Minimum setting unit Panel/Communication	Adjustment range	Default setting	User setting	Reference
F470	0470	VIA input bias	-	1/1	0-255	128		6.10.3
F471	0471	VIA input gain	-	1/1	0-255	128		
F472	0472	VIB input bias	-	1/1	0-255	128		
F473	0473	VIB input gain	-	1/1	0-255	128		
F474	0474	VIC input bias	-	1/1	0-255	128		
F475	0475	VIC input gain	-	1/1	0-255	128		

- Torque boost parameters 2

Title	Communications No.	Function	Unit	Minimum setting unit Panel/Communications	Adjustment range	Default setting	User setting	Reference
F480	0480	Motor specific coefficient 6	-	-	-	-		* 4
F485	0485	Motor specific coefficient 7	-	-	-	-		
F490	0490	Motor specific coefficient 8	-	-	-	-		
F493	0493	Motor specific coefficient 11	-	-	-	-		
F495	0495	Motor specific coefficient 9	-	-	-	-		
F499	0499	Motor specific coefficient 10	-	-	-	-		

*4: Motor specific coefficient parameters are manufacturer setting parameters. Do not change the value of these parameters.

- Acceleration/deceleration time parameters

Title	Communication No.	Function	Unit	Minimum setting unit Panel/Communication	Adjustment range	Default setting	User setting	Reference
F500	0500	Acceleration time 2	s	0.1/0.1	0.0-3600 (360.0) *8	10.0		6.27.2
F501	0501	Deceleration time 2	s	0.1/0.1	0.0-3600 (360.0) *8	10.0		
F502	0502	Acceleration/deceleration 1 pattern	-	-	0: Linear 1: S-pattern 1 2: S-pattern 2	0		6.27.1
F503	0503	Acceleration/deceleration 2 pattern	-	-		0		6.27.2
F504	0504	Acceleration/deceleration selection (1, 2 , 3) (Panel keypad)	-	-	1: Acceleration/deceleration 1 2: Acceleration/deceleration 2 3: Acceleration/deceleration 3	1		
F505	0505	Acceleration/deceleration 1 and 2 switching frequency	Hz	0.1/0.01	0.0 (disabled) 0.1-UL	0.0		
F506	0506	S-pattern lower-limit adjustment amount	%	1/1	0-50	10		6.27.1
F507	0507	S-pattern upper-limit adjustment amount	%	1/1	0-50	10		

*8: These parameters can be changed to 0.01s unit by setting F519= 1.

11

Title	Communication No.	Function	Unit	Minimum setting unit Panel/Communication	Adjustment range	Default setting	User setting	Reference
FS10	0510	Acceleration time 3	s	0.1/0.1	0.0-3600 (360.0) *8	10.0		6.27.2
FS11	0511	Deceleration time 3	s	0.1/0.1	0.0-3600 (360.0) *8	10.0		
FS12	0512	Acceleration/deceleration 3 pattern	-	-	0: Linear 1: S-pattern 1 2: S-pattern 2	0		
FS13	0513	Acceleration/deceleration 2 and 3 switching frequency	Hz	0.1/0.01	0.0 (disabled) 0.1-UL	0.0		
FS15	0515	Deceleration time at emergency stop	s	0.1/0.1	0.0-3600 (360.0) *8	10.0		6.29.4
FS19	0519	Setting of acceleration/deceleration time unit	-	-	0: - 1: 0.01s unit (after execution: 0) 2: 0.1s unit (after execution: 0)	0		5.2 6.27.2
FS90	0590	Shock monitoring	-	-	0: Disabled 1: Current detection 2: Torque detection	0		6.28
FS91	0591	Shock monitoring trip/alarm selection	-	-	0: Alarm only 1: Tripping	0		
FS92	0592	Shock monitoring detection direction selection	-	-	0: Over-current / torque detection 1: Low-current / torque detection	0		
FS93	0593	Shock monitoring detection level	%	1/0.01	0-250	150		
FS95	0595	Shock monitoring detection time	s	0.1/0.1	0.0-10.0	0.5		
FS96	0596	Shock monitoring detection hysteresis	%	1/0.01	0-100	10		
FS97	0597	Shock monitoring detection start waiting time	s	0.1/0.1	0.0-300.0	0.0		
FS98	0598	Shock monitoring detection action selection	-	-	0: During operation 1: During operation (except acceleration / deceleration)	0		

*8: These parameters can be changed to 0.01s unit by setting FS19=1.

- Protection parameters

Title	Communication No.	Function	Unit	Minimum setting unit Panel/Communication	Adjustment range	Default setting	User setting	Reference
F601	0601	Stall prevention level 1	% (A)	1/1	10-199, *12 200 (disabled)	150		6.29.2
F602	0602	Inverter trip retention selection	-	-	0: Cleared with power off 1: Retained with power off	0		6.29.3
F603	0603	Emergency stop selection	-	-	0: Coast stop 1: Deceleration stop 2: Emergency DC braking 3: Deceleration stop (F515) 4: Quick deceleration stop 5: Dynamic quick deceleration stop	0		6.29.4
F604	0604	DC braking time during emergency stop	s	0.1/0.1	0.0-20.0	1.0		
F605	0605	Output phase failure detection selection	-	-	0: Disabled 1: At start-up (only one time after power on) 2: At start-up (each time) 3: During operation 4: At start-up + during operation 5: Detection of cutoff on output side	0		6.29.5
F607	0607	Motor 150% overload detection time	s	1/1	10-2400	300		5.6 6.29.1
F608	0608	Input phase failure detection selection	-	-	0: Disabled 1: Enabled	1		6.29.6
F609	0609	Small current detection hysteresis	%	1/1	1-20	10		6.29.7
F610	0610	Small current trip/alarm selection	-	-	0: Alarm only 1: Tripping	0		
F611	0611	Small current detection current	% (A)	1/1	0-150 *12	0		
F612	0612	Small current detection time	s	1/1	0-255	0		
F613	0613	Detection of output short-circuit at start-up	-	-	0: Each time (standard pulse) 1: Only one time after power on (standard pulse) 2: Each time (short pulse) 3: Only one time after power on (short pulse)	0		6.29.8
F614	0614	Ground fault detection selection	-	-	0: Disabled 1: Enabled	1		6.29.9
F615	0615	Over-torque trip/alarm selection	-	-	0: Alarm only 1: Tripping	0		6.29.10
F616	0616	Over-torque detection level	%	1/0.01	0 (disabled) 1-250	150		
F618	0618	Over-torque detection time	s	0.1/0.1	0.0-10.0	0.5		
F619	0619	Over-torque detection hysteresis	%	1/0.01	0-100	10		
F620	0620	Cooling fan ON/OFF control	-	-	0: ON/OFF control 1: Always ON 2-7: -	0		6.29.11
F621	0621	Cumulative operation time alarm setting	100 hours	0.1/0.1 (=10 hours)	0.0-999.0	876.0		6.29.12
F625	0625	Factory specific coefficient 6A	-	-	-	-		*3
F626	0626	Over-voltage stall protection level	%	1/1	100-150	*2		6.19.4 6.19.5

*3: Factory specific coefficient parameters are manufacturer setting parameters. Do not change the value of these parameters.

*12: When F701=1, adjustment range is 100%=rated current, or 100%=200V(240V class)/ 400V(500V class).

11

Title	Communication No.	Function	Unit	Minimum setting unit Panel/Communication	Adjustment range	Default setting	User setting	Reference
F627	0627	Undervoltage trip/alarm selection	-	-	0: Alarm only(detection level 60% or less) 1: Tripping (detection level 60% or less) 2: Alarm only(detection level 50% or less, input AC or DC reactor required) 3: -	0		6.29.13
F629	0629	Factory specific coefficient 6B	-	-	-	-		* 3
F631	0631	Inverter overload detection method	-	-	0: 150%-60s (120%-60s) 1: Temperature estimation	0		5.6
F632	0632	Electronic-thermal memory	-	-	0: Disabled (tHr, F173) 1: Enabled (tHr, F173) 2: Disabled (tHr) 3: Enabled (tHr)	0		5.6 6.29.1
F633	0633	Analog input break detection level (VIC)	%	1/1	0: Disabled, 1-100	0		6.29.14
F634	0634	Annual average ambient temperature (parts replacement alarms)	-	-	1: -10 to +10°C 2: 11-20°C 3: 21-30°C 4: 31-40°C 5: 41-50°C 6: 51-60°C	3		6.29.15
F643	0643	Factory specific coefficient 6C	-	-	-	-		* 3
F644	0644	Operation selection of analog input break detection (VIC)	-	-	0: Tripping 1: Alarm only (Coast stop) 2: Alarm only (F649 frequency) 3: Alarm only (Maintain running) 4: Alarm only (Deceleration stop)	0		6.29.14
F645	0645	PTC thermal selection	-	-	1: Tripping 2: Alarm only	1		6.29.16
F646	0646	PTC detection resistor value	Ω	1/1	100-9999	3000		
F648	0648	Number of starting alarm	10000 times	0.1/0.1	0.0-999.0	999.0		6.29.17
F649	0649	Fallback frequency	Hz	0.1/0.01	LL-UL	0.0		6.29.14
F650	0650	Forced fire-speed control selection	-	-	0: Disabled 1: Enabled	0		6.30
F656	0656	Factory specific coefficient 6D	-	-	-	-		* 3
F657	0657	Overload alarm level	%	1/1	10-100	50		5.6
F660	0660	Override addition input selection	-	-	0: Disabled 1: Terminal VIA 2: Terminal VIB 3: Terminal VIC 4: FC	0		6.31
F661	0661	Override multiplication input selection	-	-	0: Disabled 1: Terminal VIA 2: Terminal VIB 3: Terminal VIC 4: F729	0		
F663	0663	Analog input terminal function selection (VIB)	-	-	0: Frequency command 1: Acceleration/deceleration time 2: Upper limit frequency 3, 4: - 5: Torque boost value 6: Stall prevention level 7: Motor electronic-thermal protection level 8 to 10: - 11: Base frequency voltage	0		6.32

*2: Default setting values vary depending on the capacity. Refer to section 11.4.

*3: Factory specific coefficient parameters are manufacturer setting parameters. Do not change the value of these parameters.

- Output parameters

Title	Communication No.	Function	Unit	Minimum setting unit Panel/Communication	Adjustment range	Default setting	User setting	Reference
F667	0667	Integral input power pulse output unit	-	-	0: 0.1kWh 1: 1kWh 2: 10kWh 3: 100kWh	1		6.33.1
F668	0668	Integral input power pulse output width	s	0.1/0.1	0.1-1.0	0.1		
F669	0669	Logic output/pulse train output selection (OUT)	-	-	0: Logic output 1: Pulse train output	0		6.33.2
F676	0676	Pulse train output function selection (OUT)	-	-	0: Output frequency 1: Output current 2: Frequency command value 3: Input voltage (DC detection) 4: Output voltage (command value) 5: Input power 6: Output power 7: Torque 8: - 9: Motor cumulative load factor 10: Inverter cumulative load factor 11: PBR (Braking resistor) cumulative load factor 12: Stator frequency 13: VIA input value 14: VIB input value 15: Fixed output 1 (output current 100% equivalent) 16: Fixed output 2 (output current 50% equivalent) 17: Fixed output 3 (Other than the output current) 18: Communication data 19: - 20: VIC input value 21, 22: - 23: PID feedback value	0		
F677	0677	Maximum numbers of pulse train output	kpps	0.01/0.01	0.50-2.00	0.80		
F678	0678	Pulse train output filter	ms	1/1	2-1000	64		
F679	0679	Pulse train input filter	ms	1/1	2-1000	2		6.10.5
F681	0681	Analog output signal selection	-	-	0: Meter option (0 to 1 mA) 1: Current (0 to 20 mA) output 2: Voltage (0 to 10 V) output	0		5.1 6.33.3
F684	0684	Analog output filter	ms	1/1	2-1000	2		
F691	0691	Inclination characteristic of analog output	-	-	0: Negative inclination (downward slope) 1: Positive inclination (upward slope)	1		
F692	0692	Analog output bias	%	0.1/0.1	-1.0－+100.0	0.0		
F693	0693	Factory specific coefficient 6E	-	-	-	-		* 3

*3: Factory specific coefficient parameters are manufacturer setting parameters. Do not change the value of these parameters.

- Operation panel parameters

Title	Communication No.	Function	Unit	Minimum setting unit Panel/Communication	Adjustment range	Default setting	User setting	Reference
F700	0700	Parameter protection selection	-	-	0: Permitted 1: Writing prohibited (Panel and extension panel) 2: Writing prohibited (1 + RS485 communication) 3: Reading prohibited (Panel and extension panel) 4: Reading prohibited (3 + RS485 communication)	0		6.34.1
F701	0701	Current/voltage unit selection	-	-	0: % 1: A (ampere)/V (volt)	0		5.10.1
F702	0702	Frequency free unit display magnification	Times	0.01/0.01	0.00: Disabled (display of frequency) 0.01-200.0	0.00		5.10.2
F703	0703	Frequency free unit coverage selection	-	1/1	0: All frequencies display 1: PID frequencies display	0		
F705	0705	Inclination characteristic of free unit display	-	1/1	0: Negative inclination (downward slope) 1: Positive inclination (upward slope)	1		
F706	0706	Free unit display bias	Hz	0.01/0.01	0.00-FH	0.00		
F707	0707	Free step 1 (1-step rotation of setting dial)	Hz	0.01/0.01	0.00: Automatic 0.01-FH	0.00		6.34.4
F708	0708	Free step 2 (panel display)	-	-	0: Automatic 1-255	0		
F709	0709	Standard monitor hold function	-	-	0: Real time 1: Peak hold 2: Minimum hold	0		6.34.7

Title	Communication No.	Function	Unit	Minimum setting unit Panel/Communication	Adjustment range	Default setting	User setting	Reference
F710	0710	Initial panel display selection	-	-	0: Output frequency (Hz/free unit) 1: Output current (%/A) 2: Frequency command value (Hz/free unit) 3: Input voltage (DC detection) (%/V) 4: Output voltage (command value) (%/V) 5: Input power (kW) 6: Output power (kW) 7: Torque (%) 8: - 9: Motor cumulative load factor 10: Inverter cumulative load factor 11: PBR (Braking resistor) cumulative load factor 12: Stator frequency (Hz/free unit) 13: VIA input value (%) 14: VIB input value (%) 15 to 17: - 18: Arbitrary code from communication 19: - 20: VIC input value (%) 21: Pulse train input value (pps) 22: - 23: PID feedback value (Hz/free unit) 24: Integral input power (kWh) 25: Integral output power (kWh) 26: Motor load factor (%) 27: Inverter load factor (%) 28: Inverter rated current (A) 29: FM output value (%) 30: Pulse train output value (pps) 31: Cumulative power on time (100 hours) 32: Cumulative fan operation time (100 hours) 33: Cumulative operation time (100 hours) 34: Number of starting (10000 times) 35: Forward number of starting (10000 times) 36: Reverse number of starting (10000 times) 37: Number of trip (times) 38, 39: - 40: Inverter rated current (Carrier frequency corrected) 41 to 51: - 52: Frequency command value / output frequency (Hz/free unit)	0		6.34.5 8.2.1 8.3.2

Title	Communication No.	Function	Unit	Minimum setting unit Panel/Communication	Adjustment range	Default setting	User setting	Reference
F711	0711	Status monitor 1	-	-	0: Output frequency (Hz/free unit) 1: Output current (%/A) 2: Frequency command value (Hz/free unit) 3: Input voltage (DC detection) (%/V) 4: Output voltage (command value) (%/V) 5: Input power (kW) 6: Output power (kW) 7: Torque (%) 8: - 9: Motor cumulative load factor 10: Inverter cumulative load factor 11: PBR (Braking resistor) cumulative load factor 12: Stator frequency (Hz/free unit) 13: VIA input value (%) 14: VIB input value (%) 15 to 17: - 18: Arbitrary code from communication 19: - 20: VIC input value (%) 21: Pulse train input value (pps) 22: - 23: PID feedback value (Hz/free unit) 24: Integral input power (kWh) 25: Integral output power (kWh) 26: Motor load factor (%) 27: Inverter load factor (%) 28: Inverter rated current (A) 29: FM output value (%) 30: Pulse train output value (pps) 31: Cumulative power on time (100 hours) 32: Cumulative fan operation time (100 hours) 33: Cumulative operation time (100 hours) 34: Number of starting (10000 times) 35: Forward number of starting (10000 times) 36: Reverse number of starting (10000 times) 37: Number of trip (times) 38, 39: - 40: Inverter rated current (Carrier frequency corrected) 41 to 51: - 52: Frequency command value / output frequency (Hz/free unit)	2		6.34.6 8.2.1 8.3.2
F712	0712	Status monitor 2	-	-		1		
F713	0713	Status monitor 3	-	-		3		
F714	0714	Status monitor 4	-	-		4		
F715	0715	Status monitor 5	-	-		5		
F716	0716	Status monitor 6	-	-		6		
F717	0717	Status monitor 7	-	-		27		
F718	0718	Status monitor 8	-	-		0		
F719	0719	Selection of operation command clear	-	-	0: Clear at coast stop and retained at nOFF. 1: Retained at coast stop and nOFF. 2: Clear at coast stop and nOFF. 3: 2+ clear when CMOd is changed	1		6.34.8
F720	0720	Initial extension panel display selection	-	-	0-52 (Same as F710)	0		6. 34.5
F721	0721	Panel stop pattern	-	-	0: Deceleration stop 1: Coast stop	0		6. 34.9
F724	0724	Operation frequency setting target by setting dial	-	-	0: Panel frequency (FC) 1: Panel frequency (FC) + Preset speed frequency	1		5.7

Title	Communication No.	Function	Unit	Minimum setting unit Panel/Communication	Adjustment range	Default setting	User setting	Reference
F729	0729	Operation panel override multiplication gain	%	1/0.01	-100-+100	0		6.31
F730	0730	Panel frequency setting prohibition (FC)	-	-	0: Permitted 1: Prohibited	0		6.34.1
F731	0731	Disconnection detection of extension panel	-	-	0: Permitted 1: Prohibited	0		
F732	0732	Local/remote key prohibition of extension panel	-	-	0: Permitted 1: Prohibited	1		6.16 6. 34.1
F733	0733	Panel operation prohibition (RUN key)	-	-	0: Permitted 1: Prohibited	0		6. 34.1
F734	0734	Panel emergency stop operation prohibition	-	-	0: Permitted 1: Prohibited	0		
F735	0735	Panel reset operation prohibition	-	-	0: Permitted 1: Prohibited	0		
F736	0736	CMOd/FMOd change prohibition during operation	-	-	0: Permitted 1: Prohibited	1		
F737	0737	All key operation prohibition	-	-	0: Permitted 1: Prohibited	0		
F738	0738	Password setting (F700)	-	-	0: Password unset 1-9998 9999: Password set	0		
F739	0739	Password verification	-	-	0: Password unset 1-9998 9999: Password set	0		
F740	0740	Trace selection	-	-	0: Disabled 1: At tripping 2: At triggering 3: 1+2	1		6.35
F741	0741	Trace cycle	-	-	0: 4ms 1: 20ms 2: 100ms 3: 1s 4: 10s	2		
F742	0742	Trace data 1	-	-	0-42	0		
F743	0743	Trace data 2	-	-		1		
F744	0744	Trace data 3	-	-		2		
F745	0745	Trace data 4	-	-		3		
F746	0746	Status monitor filter	ms	1/1	8-1000	200		6.34.7
F748	0748	Integrating wattmeter retention selection	-	-	0: Disabled 1: Enabled	0		6.36
F749	0749	Integrating wattmeter display unit selection	-	-	0:1=1kWh 1:1=10kWh 2:1=100kWh 3:1=1000kWh 4:1=10000kWh	*2		

*2: Default setting values vary depending on the capacity. Refer to section 11.4.

Title	Communication No.	Function	Unit	Minimum setting unit Panel/Communication	Adjustment range	Default setting	User setting	Reference
F750	0750	EASY key function selection	-	-	0: Easy / standard setting mode switching function 1: Shortcut key 2: Local / remote key 3: Monitor peak / minimum hold trigger 4: - 5: -	0		4.5 6.16 6.37
F751	0751	Easy setting mode parameter 1	-	-	0-2999 (Set by communication number)	3 (CMod)		4.5 6.37
F752	0752	Easy setting mode parameter 2	-	-		4 (FMod)		
F753	0753	Easy setting mode parameter 3	-	-		9 (ACC)		
F754	0754	Easy setting mode parameter 4	-	-		10 (dEC)		
F755	0755	Easy setting mode parameter 5	-	-		12 (UL)		
F756	0756	Easy setting mode parameter 6	-	-		13 (LL)		
F757	0757	Easy setting mode parameter 7	-	-		600 (tHr)		
F758	0758	Easy setting mode parameter 8	-	-		6 (FM)		
F759	0759	Easy setting mode parameter 9	-	-		999		
F760	0760	Easy setting mode parameter 10	-	-		999		
F761	0761	Easy setting mode parameter 11	-	-		999		
F762	0762	Easy setting mode parameter 12	-	-		999		
F763	0763	Easy setting mode parameter 13	-	-		999		
F764	0764	Easy setting mode parameter 14	-	-		999		
F765	0765	Easy setting mode parameter 15	-	-		999		
F766	0766	Easy setting mode parameter 16	-	-		999		
F767	0767	Easy setting mode parameter 17	-	-		999		
F768	0768	Easy setting mode parameter 18	-	-		999		
F769	0769	Easy setting mode parameter 19	-	-		999		
F770	0770	Easy setting mode parameter 20	-	-		999		
F771	0771	Easy setting mode parameter 21	-	-		999		
F772	0772	Easy setting mode parameter 22	-	-		999		
F773	0773	Easy setting mode parameter 23	-	-		999		
F774	0774	Easy setting mode parameter 24	-	-		999		
F775	0775	Easy setting mode parameter 25	-	-		999		
F776	0776	Easy setting mode parameter 26	-	-		999		
F777	0777	Easy setting mode parameter 27	-	-		999		

Title	Communication No.	Function	Unit	Minimum setting unit Panel/Communication	Adjustment range	Default setting	User setting	Reference
F778	0778	Easy setting mode parameter 28	-	-	0-2999 (Set by communication number)	999		4.5 6.37
F779	0779	Easy setting mode parameter 29	-	-		999		
F780	0780	Easy setting mode parameter 30	-	-		999		
F781	0781	Easy setting mode parameter 31	-	-		701 (F701)		
F782	0782	Easy setting mode parameter 32	-	-		50 (PSEL)		
F790	0790	Panel display selection at power on	-	-	0: HELLO 1: F791 to F794 2, 3: -	0		6.34.10
F791	0791	1st and 2nd characters of F790	hex	-	0-FFFF	2d2d		
F792	0792	3rd and 4th characters of F790	hex	-	0-FFFF	2d2d		
F793	0793	5th and 6th characters of F790	hex	-	0-FFFF	2d2d		
F794	0794	7th and 8th characters of F790	hex	-	0-FFFF	2d2d		
F799	0799	Factory specific coefficient 7A	-	-	-	-		*3

*3: Factory specific coefficient parameters are manufacturer setting parameters. Do not change the value of these parameters.

- Communication parameters

Title	Communication No.	Function	Unit	Minimum setting unit Panel/Communication	Adjustment range	Default setting	User setting	Reference
F800	0800	Baud rate	-	-	3: 9600bps 4: 19200bps 5: 38400bps	4		6.38.1
F801	0801	Parity	-	-	0: No parity 1: Even parity 2: Odd parity	1		
F802	0802	Inverter number	-	1/1	0-247	0		
F803	0803	Communication time-out time	s	0.1/0.1	0.0: Disabled, 0.1-100.0	0.0		
F804	0804	Communication time-out action	-	-	0: Alarm only 1: Trip (Coast stop) 2: Trip (Deceleration stop)	0		
F805	0805	Communication waiting time	s	0.01/0.01	0.00-2.00	0.00		
F806	0806	Setting of master and slave for communication between inverters	-	-	0: Slave (0 Hz command issued in case the master inverter fails) 1: Slave (Operation continued in case the master inverter fails) 2: Slave (Emergency stop tripping in case the master inverter fails) 3: Master (transmission of frequency commands) 4: Master (transmission of output frequency signals)	0		
F808	0808	Communication time-out detection condition	-	-	0: Valid at any time 1: Communication selection of FA0d or CA0d 2: 1 + during operation	1		

11

Title	Communication No.	Function	Unit	Minimum setting unit Panel/Communication	Adjustment range	Default setting	User setting	Reference
F810	0810	Communication command point selection	-	1/1	0: Disabled 1: Enabled	0		6.10.2 6.38.1
F811	0811	Communication command point 1 setting	%	1/1	0-100	0		
F812	0812	Communication command point 1 frequency	Hz	0.1/0.01	0.0-FH	0.0		
F813	0813	Communication command point 2 setting	%	1/1	0-100	100		
F814	0814	Communication command point 2 frequency	Hz	0.1/0.01	0.0-FH	*1		
F829	0829	Selection of communication protocol	-	-	0: Toshiba inverter protocol 1: Modbus RTU protocol	0		6.38.1
F856	0856	Number of motor poles for communication	-	-	1: 2 poles 2: 4 poles 3: 6 poles 4: 8 poles 5: 10 poles 6: 12 poles 7: 14 poles 8: 16 poles	2		
F870	0870	Block write data 1	-	-	0: No selection 1: Communication command 1 2: Communication command 2 3: Frequency command value 4: Output data on the terminal block 5: FM analog output 6: Motor speed command	0		
F871	0871	Block write data 2	-	-		0		
F875	0875	Block read data 1	-	-	0: No selection 1: Status information 1 2: Output frequency 3: Output current 4: Output voltage 5: Alarm information 6: PID feedback value 7: Input terminal monitor 8: Output terminal monitor 9: Terminal VIA monitor 10: Terminal VIB monitor 11: Terminal VIC monitor 12: Input voltage (DC detection) 13: Motor speed 14: Torque	0		
F876	0876	Block read data 2	-	-		0		
F877	0877	Block read data 3	-	-		0		
F878	0878	Block read data 4	-	-		0		
F879	0879	Block read data 5	-	-		0		
F880	0880	Free notes	-	1/1	0-65530 (65535)	0		6.38.3
F898	0898	Factory specific coefficient 8A	-	-	-	-		*3
F899	0899	Communication function reset	-	-	0: - 1: Reset (after execution: 0)	0		6.38.1

*1: Default setting values vary depending on the setup menu setting. Refer to section 11.5.

*3: Factory specific coefficient parameters are manufacturer setting parameters. Do not change the value of these parameters.

- PM motor parameters

Title	Communication No.	Function	Unit	Minimum setting unit Panel/Communication	Adjustment range	Default setting	User setting	Reference
F900	0900	Factory specific coefficient 9A	-	-	-	-		*3
F901	0901	Factory specific coefficient 9B	-	-	-	-		
F902	0902	Factory specific coefficient 9C	-	-	-	-		
F909	0909	Factory specific coefficient 9D	-	-	-	-		
F910	0910	Step-out detection current level	%	1/0.01	1-150	100		6.39
F911	0911	Step-out detection time	s	0.01/0.01	0.00: No detection 0.01-2.55	0.00		
F912	0912	q-axis inductance	mH	0.01/0.01	0.01-650.0	10.00		6.25.2 6.39
F913	0913	d-axis inductance	mH	0.01/0.01	0.01-650.0	10.00		
F914	0914	Factory specific coefficient 9E	-	-	-	-		* 3
F915	0915	Factory specific coefficient 9L	-	-	-	-		
F916	0916	Factory specific coefficient 9F	-	-	-	-		
F917	0917	Factory specific coefficient 9G	-	-	-	-		
F918	0918	Factory specific coefficient 9H	-	-	-	-		
F919	0919	Factory specific coefficient 9I	-	-	-	-		
F920	0920	Factory specific coefficient 9J	-	-	-	-		
F930	0930	Factory specific coefficient 9K	-	-	-	-		

*3: Factory specific coefficient parameters are manufacturer setting parameters. Do not change the value of these parameters.

- Traverse parameters

Title	Communication No.	Function	Unit	Minimum setting unit Panel/Communication	Adjustment range	Default setting	User setting	Reference
F980	0980	Traverse selection	-	1/1	0: Disabled 1: Enabled	0		6.40
F981	0981	Traverse acceleration time	s	0.1/0.1	0.1-120.0	25.0		
F982	0982	Traverse deceleration time	s	0.1/0.1	0.1-120.0	25.0		
F983	0983	Traverse step	%	0.1/0.1	0.0-25.0	10.0		
F984	0984	Traverse jump step	%	0.1/0.1	0.0-50.0	10.0		

- Factory specific parameters

Title	Function	Reference
A900-A977	Factory specific coefficient	*3

*3: Factory specific coefficient parameters are manufacturer setting parameters. Do not change the value of these parameters.

- Communication option parameters

Title	Function	Reference
C001-C111, C885-C896, C900-C999	Communication option common parameters	Note 1)
C120-C148	CC-Link option parameters	E6581830
C150-C164	PROFIBUS DP option parameters	E6581738
C200-C203	DeviceNet option parameters	E6581737
C400-C421, C850-C880	EtherCAT option parameters	E6581818
C500-C536	EtherNet common parameters	E6581741
C554-C556	EtherNet/IP option parameters	
C600-C604	Modbus TCP option parameters	
C700-C789, C800-C830	CANopen communication parameters	E6581911

Note 1) Refer to each Instruction Manual for option about detailed specifications and common parameters.

11.4 Default settings by inverter rating

Inverter type	Torque boost value	Dynamic braking resistance	Dynamic braking resistor capacity	Automatic torque boost value	Motor rated capacity	Motor rated current	Motor no-load current	Over-voltage stall protection level	Integrating wattmeter display unit selection
	ub/ F172 (%)	F308 (Ω)	F309 (kW)	F402 (%)	F405 (kW)	F415 (A)	F416 (%)	F626 (%)	F749
VFS15-2004PM-W	6.0	200.0	0.12	6.2	0.40	2.00	65	136	0
VFS15-2007PM-W	6.0	200.0	0.12	5.8	0.75	3.40	60	136	0
VFS15-2015PM-W	6.0	75.0	0.12	4.3	1.50	6.20	55	136	0
VFS15-2022PM-W	5.0	75.0	0.12	4.1	2.20	8.90	52	136	0
VFS15-2037PM-W*1	5.0	40.0	0.12	3.4	4.00	14.80	48	136	1
VFS15-2055PM-W	4.0	15.0	0.44	3.0	5.50	21.00	46	136	1
VFS15-2075PM-W	3.0	15.0	0.44	2.5	7.50	28.20	43	136	1
VFS15-2110PM-W	2.0	7.5	0.88	2.3	11.00	40.60	41	136	1
VFS15-2150PM-W	2.0	7.5	0.88	2.0	15.00	54.60	38	136	1
VFS15S-2002PL-W	6.0	200.0	0.12	8.3	0.20	1.20	70	136	0
VFS15S-2004PL-W	6.0	200.0	0.12	6.2	0.40	2.00	65	136	0
VFS15S-2007PL-W	6.0	200.0	0.12	5.8	0.75	3.40	60	136	0
VFS15S-2015PL-W	6.0	75.0	0.12	4.3	1.50	6.20	55	136	0
VFS15S-2022PL-W	5.0	75.0	0.12	4.1	2.20	8.90	52	136	0
VFS15-4004PL-W	6.0	200.0	0.12	6.2	0.40	1.00	65	141	0
VFS15-4007PL-W	6.0	200.0	0.12	5.8	0.75	1.70	60	141	0
VFS15-4015PL-W	6.0	200.0	0.12	4.3	1.50	3.10	55	141	0
VFS15-4022PL-W	5.0	200.0	0.12	4.1	2.20	4.50	52	141	0
VFS15-4037PL-W*1	5.0	160.0	0.12	3.4	4.00	7.40	48	141	1
VFS15-4055PL-W	4.0	60.0	0.44	2.6	5.50	10.50	46	141	1
VFS15-4075PL-W	3.0	60.0	0.44	2.3	7.50	14.10	43	141	1
VFS15-4110PL-W	2.0	30.0	0.88	2.2	11.00	20.30	41	141	1
VFS15-4150PL-W	2.0	30.0	0.88	1.9	15.00	27.30	38	141	1

*1: When region setting is JP, F405 is set to 3.7(kW).

11.5 Default settings by setup menu

Function		Title	Main regions			
			EU (Europe)	ASIA (Asia, Oceania) Note 1)	USA (North America)	JP (Japan)
Frequency		UL1 uL1 F170 1 F204 1 F213 1 F219 1 F330 1 F367 1 F814	50.0(Hz)	50.0(Hz)	60.0(Hz)	60.0(Hz)
Base frequency voltage 1, 2	240V class	uLu/ F171	230(V)	230(V)	230(V)	200(V)
	500V class		400(V)	400(V)	460(V)	400(V)
V/F control mode selection		Pt	0	0	0	2
Supply voltage correction (output voltage limitation)		F307	2	2	2	3
Regenerative over-excitation upper limit		F319	120	120	120	140
Motor rated speed		F417	1410(min^{-1})	1410(min^{-1})	1710(min^{-1})	1710(min^{-1})

Note1) Refer to section 3.1 about setup menu.

11

11.6 Input Terminal Function

It can be assigned the function No. in the following table to parameter F104, F108, F110 to F118, F151 to F156, A973 to A976.

- Table of input terminal functions 1

Function No.	Code	Function	Action	Reference
0,1	-	No function	Disabled	-
2	F	Forward run command	ON: Forward run, OFF: Deceleration stop	3.2.1 7.2.1
3	FN	Inversion of forward run command	Inversion of F	
4	R	Reverse run command	ON: Reverse run, OFF: Deceleration stop	
5	RN	Inversion of reverse run command	Inversion of R	
6	ST	Standby	ON: Ready for operation OFF: Coast stop (gate OFF)	3.2.1 5.9
7	STN	Inversion of standby	Inversion of ST	6.7.1 6.34.8
8	RES	Reset command 1 *2	ON: Acceptance of reset command, ON → OFF: Trip reset	13.2
9	RESN	Inversion of reset command 1 *2	Inversion of RES	
10	SS1	Preset-speed command 1	Selection of 15-speed SS1 to SS4 (SS1N to SS4N) (4 bits)	5.7 7.2.1
11	SS1N	Inversion of preset-speed command 1		
12	SS2	Preset-speed command 2		
13	SS2N	Inversion of preset-speed command 2		
14	SS3	Preset-speed command 3		
15	SS3N	Inversion of preset-speed command 3		
16	SS4	Preset-speed command 4		5.7
17	SS4N	Inversion of preset-speed command 4		
18	JOG	Jog run mode	ON: Jogging mode, OFF: Jog run canceled	6.14
19	JOGN	Inversion of jog run mode	Inversion of JOG	
20	EXT	Emergency stop by external signal	ON: E trip stop, OFF: After stopped by F603, E trip	6.29.4
21	EXTN	Inversion of emergency stop by external signal	Inversion of EXT	
22	DB	DC braking command	ON: DC braking, OFF: Brake canceled	6.12.1
23	DBN	Inversion of DC braking command	Inversion of DB	
24	AD2	2nd acceleration/deceleration	ON: Acceleration/deceleration 2 OFF: Acceleration/deceleration 1	6.8.1 6.27.2
25	AD2N	Inversion of 2nd acceleration/deceleration	Inversion of AD2	
26	AD3	3rd acceleration/deceleration	ON: Acceleration/deceleration 3 OFF: Acceleration/deceleration 1 or 2	
27	AD3N	Inversion of 3rd acceleration/deceleration	Inversion of AD3	
28	VF2	2nd V/F control mode switching	ON: 2nd V/F control mode (V/F fixed, F170, F171, F172, F173 (tHr when F632=2 or 3)) OFF: 1st V/F control mode (Pt setting, uL, uLu, ub, tHr)	6.8.1
29	VF2N	Inversion of 2nd V/F control mode switching	Inversion of VF2	
32	OCS2	2nd stall prevention level	ON: Enabled at the value of F185, F444 and F445 OFF: Enabled at the value of F601, F441 and F443	6.8.1 6.29.2
33	OCS2N	Inversion of 2nd stall prevention level	Inversion of OCS2	
36	PID	PID control prohibition	ON: PID control prohibited, OFF: PID control enabled	6.24
37	PIDN	Inversion of PID control prohibition	Inversion of PID	
46	OH2	External thermal error input	ON: OH2 trip stop, OFF: Disabled	7.2.1
47	OH2N	Inversion of external thermal error input	Inversion of OH2	
48	SCLC	Forced local from communication	Enabled during communication ON: Local (Setting of CMOd, FMOd) OFF: Communication	6.2.1 6.38
49	SCLCN	Inversion of forced local from communication	Inversion of SCLC	
50	HD	Operation hold (hold of 3-wire operation)	ON: F (forward run), R: (reverse run) held, 3-wire operation OFF: Deceleration stop	7.2.1
51	HDN	Inversion of operation hold (hold of 3-wire operation)	Inversion of HD	

*2: These functions are cannot be assigned to Always active function selection 1 to 3 (F104, F108, F110).

- Table of input terminal functions 2

Function No.	Code	Function	Action	Reference
52	IDC	PID integral/differential clear	ON: Integral/differential clear, OFF: Clear canceled	6.24
53	IDCN	Inversion of PID integral/differential clear	Inversion of IDC	
54	DR	PID characteristics switching	ON: Inverted characteristics of F380 selection OFF: Characteristics of F380 selection	
55	DRN	Inversion of PID characteristics switching	Inversion of DR	
56	FORCE	Forced run operation	ON: Forced run operation if specified faults are occurred (F299 frequency) OFF: Normal operation	6.30
57	FORCEN	Inversion of forced run operation	Inversion of FORCE	
58	FIRE	Fire speed operation	ON: Fire speed operation (F294 frequency) OFF: Normal operation	
59	FIREN	Inversion of fire speed operation	Inversion of FIRE	
60	DWELL	Acceleration/deceleration suspend signal	ON: Acceleration/deceleration suspend OFF: Normal operation	6.23
61	DWELLN	Inversion of acceleration/deceleration suspend signal	Inversion of DWELL	
62	KEB	Power failure synchronized signal	ON: Deceleration stop with synchronizing when power failure OFF: Normal operation	6.19.2
63	KEBN	Inversion of power failure synchronized signal	Inversion of KEB	
64, 65		Factory specific coefficient	-	*1
70, 71		Factory specific coefficient	-	*1
74	CKWH	Integrating wattmeter(kWh) display clear	ON: Integrating wattmeter(kwh) monitor display clear OFF: Disabled	6.36
75	CKWHN	Inversion of integrating wattmeter display clear	Inversion of CKWH	
76	TRACE	Trace back trigger signal	ON: Trigger(start) signal of trace function OFF: Disabled	6.35
77	TRACEN	Inversion of trace back trigger signal	Inversion of TRACE	
78	HSLL	Light-load high-speed operation prohibitive signal	ON: Light-load high-speed operation prohibited OFF: Light-load high-speed operation permitted	6.21
79	HSLLN	Inversion of light-load high-speed operation prohibitive signal	Inversion of HSLL	
80	HDRY	Holding of RY-RC terminal output	ON: Once turned on, RY-RC are held on. OFF: The status of RY-RC changes in real time according to conditions.	7.2.2
81	HDRYN	Inversion of holding of RY-RC terminal output	Inversion of HDRY	
82	HDOUT	Holding of OUT-NO terminal output	ON: Once turned on, OUT-NO are held on. OFF: The status of OUT-NO changes in real time according to conditions.	
83	HDOUTN	Inversion of holding of OUT-NO terminal output	Inversion of HDOUT	
88	UP	Frequency UP	ON: Frequency increased OFF: Frequency increase canceled	6.10.4
89	UPN	Inversion of frequency UP	Inversion of UP	
90	DWN	Frequency DOWN	ON: Frequency decreased OFF: Frequency decrease canceled	
91	DWNN	Inversion of frequency DOWN	Inversion of DWN	
92	CLR	Clear frequency UP/DOWN	OFF ON: Clear frequency UP/DOWN	
93	CLRN	Inversion of clear frequency UP/DOWN	Inversion of CLR	
96	FRR	Coast stop command	ON: Coast stop (Gate OFF) OFF: Coast stop canceled	3.2.1 6.34.8
97	FRRN	Inversion of coast stop command	Inversion of FRR	
98	FR	Forward/reverse selection	ON: Forward command OFF: Reverse command	7.2.1
99	FRN	Inversion of forward/reverse selection	Inversion of FR	

*1: Factory specific coefficient parameters are manufacturer setting parameters. Do not change the value of these parameters.

- Table of input terminal functions 3

Function No.	Code	Function	Action	Reference
100	RS	Run/Stop command	ON: Run command OFF: Stop command	7.2.1
101	RSN	Inversion of run/Stop command	Inversion of RS	
104	FCHG	Frequency setting mode forced switching	ON: F207 (F200=0) OFF: FMOd	6.2.1
105	FCHGN	Inversion of frequency setting mode forced switching	Inversion of FCHG	
106	FMTB	Frequency setting mode terminal block	ON: Terminal block (VIA) enabled OFF: Setting of FMOd	
107	FMTBN	Inversion of frequency setting mode terminal block	Inversion of FMTB	
108	CMTB	Command mode terminal block	ON: Terminal block enabled OFF: Setting of CMOd	
109	CMTBN	Inversion of command mode terminal block	Inversion of CMTB	
110	PWE	Parameter editing permission	ON: Parameter editing permitted OFF: Setting of F700	6.34.1
111	PWEN	Inversion of parameter editing permission	Inversion of PWE	
120	FSTP1	Fast stop command 1	ON: Dynamic quick deceleration command OFF: Forced deceleration canceled (Note that operation is resumed when forced deceleration is canceled)	6.1.4
121	FSTP1N	Inversion of fast stop command 1	Inversion of FSTP1	
122	FSTP2	Fast stop command 2	ON: Automatic deceleration OFF: Forced deceleration canceled (Note that operation is resumed when forced deceleration is canceled)	
123	FSTP2N	Inversion of fast stop command 2	Inversion of FSTP2	
134	TVS	Traverse permission signal	ON: Permission signal of traverse operation OFF: Normal operation	6.40
135	TVSN	Inversion of traverse permission signal	Inversion of TVS	
136	RSC	Low voltage operation signal	ON: Low voltage operation OFF: Low voltage operation canceled	6.17
137	RSCN	Inversion of low voltage operation signal	Inversion of RSC	
140	SLOWF	Forward deceleration	ON: Forward operation with F383 frequency OFF: Normal operation	6.22.2
141	SLOWFN	Inversion of forward deceleration	Inversion of SLOWF	
142	STOPF	Forward stop	ON: Forward stop, OFF: Normal operation	
143	STOPFN	Inversion of forward stop	Inversion of STOPF	
144	SLOWR	Reverse deceleration	ON: Reverse operation with F383 frequency OFF: Normal operation	
145	SLOWRN	Inversion of reverse deceleration	Inversion of SLOWR	
146	STOPR	Reverse stop	ON: Reverse stop, OFF: Normal operation	
147	STOPRN	Inversion of reverse stop	Inversion of STOPR	
148 to 151		Factory specific coefficient	-	*1
152	MOT2	No.2 motor switching (AD2+VF2+OCS2)	ON: No.2 motor (Pt=0, F170, F171, F172, F173 (tHr when F632=2 or 3), F185, F500, F501, F503) OFF: No.1 motor (Set value of Pt, uL, uLu, ub, tHr, ACC, dEC, F502, F601)	6.8.1
153	MOT2N	Inversion of No.2 motor switching (AD2+VF2+OCS2)	Inversion of MOT2	
158	RES2	Reset command 2 *2	ON: Trip reset	13.2
159	RES2N	Inversion of reset command 2 *2	Inversion of RES2	
200	PWP	Parameter editing prohibition	ON: Parameter editing prohibited OFF: Setting of F700	6.34.1
201	PWPN	Inversion of parameter editing prohibition	Inversion of PWP	
202	PRWP	Parameter reading prohibition	ON: Parameter reading / editing prohibited OFF: Setting of F700	
203	PRWPN	Inversion of parameter reading prohibition	Inversion of PRWP	

*1: Factory specific coefficient parameters are manufacturer setting parameters. Do not change the value of these parameters.

*2: These functions are cannot be assigned to Always active function selection 1 to 3 (F104, F108, F110).

Note 1: Function No. that are not described in the table above are assigned "No function".

- Input terminal function priority

Code	Function No.	2,3 4,5	6,7	8,9	10,11 12,13 14,15 16,17	18 19	20 21	22 23	24,25 28,29 32,33	36,37 52,53 54,55	48 49 106 107 108 109	50 51	88,89 90,91 92,93	96 97	110 111 200 201	122 123
F/ R	2,3 4,5		X	○	○	○	X	X	○	○	○	○	○	X	○	X
ST	6,7	◎		○	◎	◎	○	◎	○	○	○	◎	○	○	○	◎
RES	8,9	○	○		○	○	X	○	○	○	○	○	○	○	○	○
SS1/ SS2/ SS3/ SS4	10,11 12,13 14,15 16,17	○	X	○		X	X	X	○	○	○	○	○	X	○	X
JOG	18,19	○	X	○	◎		X	X	○	◎	○	X	○	X	○	X
EXT	20,21	◎	○	◎	◎	◎		◎	○	○	○	◎	○	○	○	◎
DB	22,23	◎	X	○	◎	◎	X		○	◎	○	◎	○	X	○	X
AD2/ VF2/ OCS2	24,25 28,29 32,33	○	○	○	○	○	○	○		○	○	○	○	○	○	○
PID/ IDC/ PIDSW	36,37 52,53 54,55	○	○	○	○	X	○	X	○		○	○	○	○	○	○
SCLC/ FMTB/ CMTB	48,49 106,107 108,109	○	○	○	○	○	○	○	○	○		○	○	○	○	○
HD	50,51	○	X	○	○	X	X	X	○	○	○		○	X	○	X
UP/ DWN/ CLR	88,89 90,91 92,93	○	○	○	○	○	○	○	○	○	○	○		○	○	○
FRR	96,97	◎	○	○	◎	◎	○	◎	○	○	○	◎	○		○	◎
PWE/ PWP	110,111 200,201	○	○	○	○	○	○	○	○	○	○	○	○	○		○
FST	122,123	◎	X	○	◎	◎	X	◎	○	○	○	◎	○	X	○	

◎ Priority ○ Enabled X Disabled

11.7 Output Terminal Function

It can be assigned the function No. in the following table to parameter F130 to F138, F157, F158.

- Table of output terminal functions 1

Function No.	Code	Function	Action	Reference
0	LL	Frequency lower limit	ON: Output frequency is more than LL OFF: Output frequency is LL or less	5.4
1	LLN	Inversion of frequency lower limit	Inversion of LL	
2	UL	Frequency upper limit	ON: Output frequency is UL or more OFF: Output frequency is less than UL	
3	ULN	Inversion of frequency upper limit	Inversion of UL	
4	LOW	Low-speed detection signal	ON: Output frequency is F100 or more OFF: Output frequency is less than F100	6.5.1 7.2.2
5	LOWN	Inversion of low-speed detection signal	Inversion of LOW	
6	RCH	Output frequency attainment signal (acceleration/deceleration completed)	ON: Output frequency is within command frequency ± F102 OFF: Output frequency is more than command frequency ± F102	6.5.2 7.2.2
7	RCHN	Inversion of output frequency attainment signal (inversion of acceleration/deceleration completed)	Inversion of RCH	
8	RCHF	Set frequency attainment signal	ON: Output frequency is within F101±F102 OFF: Output frequency is more than F101±F102	6.5.3
9	RCHFN	Inversion of set frequency attainment signal	Inversion of RCHF	
10	FL	Fault signal (trip output)	ON: Inverter tripped OFF: Inverter not tripped	7.2.2
11	FLN	Inversion of fault signal (inversion of trip output)	Inversion of FL	
14	POC	Over-current detection pre-alarm	ON: Output current is F601 or more OFF: Output current is less than F601	6.29.2
15	POCN	Inversion of over-current detection pre-alarm	Inversion of POC	
16	POL	Overload detection pre-alarm	ON: F657(%) or more of calculated value of overload protection level OFF: Less than F657(%) of calculated value of overload protection level	5.6
17	POLN	Inversion of overload detection pre-alarm	Inversion of POL	
20	POH	Overheat detection pre-alarm	ON: Approx. 95°C or more of IGBT element OFF: Less than approx. 95°C of IGBT element (90°C or less after detection is turned on)	7.2.2
21	POHN	Inversion of overheat detection pre-alarm	Inversion of POH	
22	POP	Overvoltage detection pre-alarm	ON: Overvoltage limit in operation OFF: Overvoltage detection canceled	6.19.5
23	POPN	Inversion of overvoltage detection pre-alarm	Inversion of POP	
24	MOFF	Power circuit undervoltage detection	ON: Power circuit undervoltage (MOFF) detected OFF: Undervoltage detection canceled	6.29.13
25	MOFFN	Inversion of power circuit undervoltage detection	Inversion of MOFF	
26	UC	Small current detection	ON: After output current comes to F611 or less, value of less than F611+F609 for F612 set time OFF: Output current is more than F611 (F611+F609 or more after detection turns on)	6.29.7
27	UCN	Inversion of small current detection	Inversion of UC	
28	OT	Over-torque detection	ON: After torque comes to F616 or more, value of more than F616-F619 for F618 set time OFF: Torque is less than F616 (F616-F619 or less after detection turns on)	6.29.10
29	OTN	Inversion of over-torque detection	Inversion of OT	

11

- Table of output terminal functions 2

Function No.	Code	Function	Action	Reference
30	POLR	Braking resistor overload pre-alarm	ON: 50% or more of calculated value of F309 set overload protection level OFF: Less than 50% of calculated value of F309 set overload protection level	6.19.4
31	POLRN	Inversion of braking resistor overload pre-alarm	Inversion of POLR	
40	RUN	Run/stop	ON: While operation frequency is output or DC braking is in operation (db) OFF: Operation stopped	7.2.2
41	RUNN	Inversion of run/stop	Inversion of RUN	
42	HFL	Serious failure	ON: At trip *2 OFF: Other than those trip above	
43	HFLN	Inversion of serious failure	Inversion of HFL	
44	LFL	Light failure	ON: At trip (OC 1~3, OP 1~3, OH, OL 1~3, OLr) OFF: Other than those trip above	
45	LFLN	Inversion of light failure	Inversion of LFL	
50	FAN	Cooling fan ON/OFF	ON: Cooling fan is in operation OFF: Cooling fan is off operation	6.29.11
51	FANN	Inversion of cooling fan ON/OFF	Inversion of FAN	
52	JOG	In jogging operation	ON: In jogging operation OFF: Other than jogging operation	6.14
53	JOGN	Inversion of in jogging operation	Inversion of JOG	
54	JBM	Operation panel / terminal block operation	ON: At terminal block operation command OFF: Other than those operation above	6.2.1
55	JBMN	Inversion of operation panel/terminal block operation	Inversion of JBM	
56	COT	Cumulative operation time alarm	ON: Cumulative operation time is F621 or more OFF: The cumulative operation time is less than F621	6.29.12
57	COTN	Inversion of cumulative operation time alarm	Inversion of COT	
58	COMOP	Communication option communication error	ON: Communication error of communication option occurs OFF: Other than those above	6.38
59	COMOPN	Inversion of communication option communication error	Inversion of COMOP	
60	FR	Forward/reverse run	ON: Reverse run OFF: Forward run (Operation command state is output while motor operation is stopped. No command is to OFF.)	7.2.2
61	FRN	Inversion of forward/reverse run	Inversion of FR	
62	RDY1	Ready for operation 1	ON: Ready for operation (with ST / RUN) OFF: Other than those above	
63	RDY1N	Inversion of ready for operation 1	Inversion of RDY1	
64	RDY2	Ready for operation 2	ON: Ready for operation (without ST / RUN) OFF: Other than those above	
65	RDY2N	Inversion of ready for operation 2	Inversion of RDY2	
68	BR	Brake release	ON: Brake exciting signal OFF: Brake releasing signal	6.22
69	BRN	Inversion of brake release	Inversion of BR	
70	PAL	Pre-alarm	ON: One of the following is turned on ON POL, POHR, POT, MOFF, UC, OT, LL stop, COT, and momentary power failure deceleration stop. Or C, P, Or, H issues an alarm OFF: Other than those above	7.2.2
71	PALN	Inversion of pre-alarm	Inversion of PAL	
78	COME	RS485 communication error	ON: Communication error occurred OFF: Communication works	6.38
79	COMEN	Inversion of RS485 communication error	Inversion of COME	

*2: At trip OCL, OCA, EPH1, EPHO, Ot, Ot2, OtC3, UtC3, OH2, E, EEP1~3, Err2~5, UC, UP1, Etn, Etn1~3, EF2, PrF, EtYP, E-13, E-18~21, E-23, E-26, E-32, E-37, E-39.

- Table of output terminal functions 3

Function No.	Code	Function	Action	Reference
92	DATA1	Designated data output 1	ON: bit0 of FA50 is ON OFF: bit0 of FA50 is OFF	6.38
93	DATA1N	Inversion of designated data output 1	Inversion of DATA1	
94	DATA2	Designated data output 2	ON: bit1 of FA50 is ON OFF: bit1 of FA50 is OFF	
95	DATA2N	Inversion of designated data output 2	Inversion of DATA2	
106	LLD	Light load output	ON: Less than heavy load torque (F335~F338) OFF: heavy load torque (F335~F338) or more	6.21
107	LLDN	Inversion of light load output	Inversion of LLD	
108	HLD	Heavy load output	ON: Heavy load torque (F335~F338) or more OFF: Less than heavy load torque (F335~F338)	
109	HLDN	Inversion of heavy load output	Inversion of HLD	
120	LLS	Lower limit frequency stop	ON: Lower limit frequency continuous operation OFF: Other than those above	6.13
121	LLSN	Inversion of lower limit frequency stop	Inversion of LLS	
122	KEB	Power failure synchronized operation	ON: Power failure synchronized operation OFF: Other than those above	6.19.2
123	KEBN	Inversion of power failure synchronized operation	Inversion of KEB	
124	TVS	Traverse in progress	ON: Traverse in progress OFF: Other than those above	6.40
125	TVSN	Inversion of traverse in progress	Inversion of TVS	
126	TVSD	Traverse deceleration in progress	ON: Traverse deceleration in progress OFF: Other than those above	
127	TVSDN	Inversion of traverse deceleration in progress	Inversion of TVSD	
128	LTA	Parts replacement alarm	ON: Any one of cooling fan, control board capacitor, or main circuit capacitor reaches parts replacement time OFF: Any one of cooling fan, control board capacitor, or main circuit capacitor does not reach parts replacement time	6.29.15
129	LTAN	Inversion of parts replacement alarm	Inversion of LTA	
130	POT	Over-torque detection pre-alarm	ON: Torque current is 70% of F616 setting value or more OFF: Torque current is less than F616x70%-F619	6.29.10
131	POTN	Inversion of over-torque detection pre-alarm	Inversion of POT	
132	FMOD	Frequency setting mode selection 1/2	ON: Select frequency setting mode selection 2 (F207) OFF: Select frequency setting mode selection 1 (Fmod)	5.8
133	FMODN	Inversion of frequency setting mode selection 1/2	Inversion of FMOD	
136	FLC	Panel / remote selection	ON: Operation command or panel OFF: Other than those above	6.2.1
137	FLCN	Inversion of panel / remote selection	Inversion of FLC	
138	FORCE	Forced continuous operation in progress	ON: Forced continuous operation in progress OFF: Other than those above	6.30
139	FORCEN	Inversion of forced continuous operation in progress	Inversion of FORCE	
140	FIRE	Specified frequency operation in progress	ON: Specified Frequency operation in progress OFF: Other than those above	
141	FIREN	Inversion of specified frequency operation in progress	Inversion of FIRE	

- Table of output terminal functions 4

Function No.	Code	Function	Action	Reference
144	PIDF	Signal in accordance of frequency command	ON: Frequency commanded by F389 and F369 are within ±F167. OFF: Other than those above	6.24
145	PIDFN	Inversion of signal in accordance of frequency command	Inversion of PIDF	
146	FLR	Fault signal (output also at a retry waiting)	ON: While inverter is tripped or retried OFF: While inverter is not tripped and not retried	6.19.3
147	FLRN	Inversion of fault signal (output also at a retry waiting)	Inversion of FLR	
150	PTCA	PTC input alarm signal	ON: PTC thermal input value is F646 or more OFF: PTC thermal input value is less than F646	6.29.16
151	PTCAN	Inversion of PTC input alarm signal	Inversion of PTCA	
152, 153		Factory specific coefficient	-	*1
154	DISK	Analog input break detection alarm	ON: VIB terminal input value is F633 or less OFF: VIB terminal input value is more than F633	6.29.14
155	DISKN	Inversion of analog input break detection alarm	Inversion of DISK	
156	LI1	F terminal status	ON: F terminal is ON status OFF: F terminal is OFF status	7.2.2
157	LI1N	Inversion of F terminal status	Inversion of LI1	
158	LI2	R terminal status	ON: R terminal is ON status OFF: R terminal is OFF status	
159	LI2N	Inversion of R terminal status	Inversion of LI2	
160	LTAF	Cooling fan replacement alarm	ON: Cooling fan reaches parts replacement time OFF: Cooling fan does not reach parts replacement time	6.29.15
161	LTAFN	Inversion of cooling fan replacement alarm	Inversion of LTAF	
162	NSA	Number of starting alarm	ON: Number of starting alarm is F648 or more OFF: Number of starting alarm is less than F648	6.29.17
163	NSAN	Inversion of number of starting alarm	Inversion of NSA	
166	DACC	Acceleration operation in progress	ON: Acceleration operation in progress OFF: Other than those above	7.2.2
167	DACCN	Inversion of acceleration operation in progress	Inversion of DACC	
168	DDEC	Deceleration operation in progress	ON: Deceleration operation in progress OFF: Other than those above	
169	DDECN	Inversion of deceleration operation in progress	Inversion of DDEC	
170	DRUN	Constant speed operation in progress	ON: Constant speed operation in progress OFF: Other than those above	
171	DRUNN	Inversion of constant speed operation in progress	Inversion of DRUN	
172	DDC	DC braking in progress	ON: DC braking in progress OFF: Other than those above	6.12.1
173	DDCN	Inversion of DC braking in progress	Inversion of DDC	
174 to 179		Factory specific coefficient	-	*1
180	IPU	Integral input power pulse output signal	ON: Integral input power unit reach OFF: Other than those above	6.33.1
182	SMPA	Shock monitoring pre-alarm signal	ON: Current / torque value reach the shock monitoring detection condition OFF: Other than those above	6.28
183	SMPAN	Inversion of Shock monitoring pre-alarm signal	Inversion of SMPA	
222 to 253		Factory specific coefficient	-	*1
254	AOFF	Always OFF	Always OFF	7.2.2
255	AON	Always ON	Always ON	

*1: Factory specific coefficient parameters are manufacturer setting parameters. Do not change the value of these parameters.

Note 1: As function No. that are not described in the table above are assigned "No function", output signal is always “OFF” at even number, output signal is always “ON” at odd number.

11.8 Application easy setting

When 1 to 7 is set by parameter AUA (Application easy setting), the parameters of the table below are set to parameter F751 to F782 (Easy setting mode parameter 1 to 32).
Parameter F751 to F782 are displayed at easy setting mode.
Refer to section 4.2 about easy setting mode.

AUA	1: Initial easy setting	2: Conveyor	3: Material handling	4: Hoisting	5: Fan	6: Pump	7: Compressor
F751	CNOd	CNOd	CNOd	CNOd	CNOd	CNOd	CNOd
F752	FNOd	FNOd	FNOd	FNOd	FNOd	FNOd	FNOd
F753	ACC	ACC	ACC	ACC	ACC	ACC	ACC
F754	dEC	dEC	dEC	dEC	dEC	dEC	dEC
F755	UL	UL	UL	UL	FH	FH	FH
F756	LL	LL	LL	LL	UL	UL	UL
F757	tHr	tHr	tHr	tHr	LL	LL	LL
F758	FM	FM	FM	FM	tHr	tHr	tHr
F759	-	Pt	Pt	Pt	FM	FM	FM
F760	-	OLM	OLM	OLM	Pt	Pt	Pt
F761	-	Sr1	Sr1	F304	F201	F201	F216
F762	-	Sr2	Sr2	F308	F202	F202	F217
F763	-	Sr3	Sr3	F309	F203	F203	F218
F764	-	Sr4	Sr4	F328	F204	F204	F219
F765	-	Sr5	Sr5	F329	F207	F207	FP1d
F766	-	Sr6	Sr6	F330	F216	F216	F359
F767	-	Sr7	Sr7	F331	F217	F217	F360
F768	-	F201	F240	F332	F218	F218	F361
F769	-	F202	F243	F333	F219	F219	F362
F770	-	F203	F250	F334	F295	F295	F363
F771	-	F204	F251	F340	F301	F301	F366
F772	-	F240	F252	F341	F302	F302	F367
F773	-	F243	F304	F345	F303	F303	F368
F774	-	F250	F308	F346	F633	F610	F369
F775	-	F251	F309	F347	F667	F611	F372
F776	-	F252	F502	F400	F668	F612	F373
F777	-	F304	F506	F405	-	F633	F380
F778	-	F308	F507	F415	-	F667	F389
F779	-	F309	F701	F417	-	F668	F391
F780	-	F701	-	F648	-	-	F621
F781	F701	F702	-	F701	-	-	-
F782	PSEL	PSEL	PSEL	PSEL	PSEL	PSEL	PSEL

11.9 Unchangeable parameters in running

For reasons of safety, the following parameters cannot be changed during inverter running.
Change parameters while inverter stops.

［Basic parameters］

AUF	(Guidance function)		FMOd *1	(Frequency setting mode selection)
AUA	(Application easy setting)		FH	(Maximum frequency)
AU1	(Automatic acceleration/deceleration)		Pt	(V/F control mode selection)
AU2	(Torque boost setting macro function)		tYP	(Default setting)
CMOd *1	(Command mode selection)		SEt	(Checking the region setting)

［Extended parameters］

F104 to F156
F190 to F199
F207/F258/F261
F301, F302
F304 to F316
F319
F328 to F330
F340, F341
F346
F348, F349
F360/F369
F375 to F378
F389/F400
F405 to F417
F451
F454, F458
F480 to F495
F519/F603/F605/F608/F613
F626 to F631
F644/F669/F681/F750/F899
F909 to F913
F915, F916
F980
A900 to A917
A973 to A977

*1: CMOd and FMOd can be changed during operation by setting F736=0.
Note) Refer to “Communication manual” about parameter Cxxx.

12. Specifications

12.1 Models and their standard specifications

■ Standard specifications

Item		Specification								
Input voltage		3-phase 240V								
Applicable motor (kW)		0.4	0.75	1.5	2.2	4.0	5.5	7.5	11	15
Rating	Type	VFS15								
	Form	2004PM-W	2007PM-W	2015PM-W	2022PM-W	2037PM-W	2055PM-W	2075PM-W	2110PM-W	2150PM-W
	Capacity (kVA) Note 1)	1.3	1.8	3.0	4.2	6.7	10.5	12.6	20.6	25.1
	Rated output current (A) Note 2)	3.3 (3.3)	4.8 (4.4)	8.0 (7.9)	11.0 (10.0)	17.5 (16.4)	27.5 (25.0)	33.0 (33.0)	54.0 (49.0)	66.0 (60.0)
	Output voltage Note 3)	3-phase 200V to 240V								
	Overload current rating	150%-60 seconds, 200%-0.5 second								
Power supply	Voltage-frequency	3-phase 200V to 240V - 50/60Hz								
	Allowable fluctuation	Voltage 170V to 264V Note 4), frequency ±5%								
	Required Power supply capacity (kVA) Note 5)	1.4	2.5	4.3	5.7	9.2	13.8	17.8	24.3	31.6
Protective method (IEC60529)		IP20								
Cooling method		Self-cooling		Forced air-cooled						
Color		RAL7016								
Built-in filter		Basic filter								

Item		Specification													
Input voltage		1-phase 240V					3-phase 500V								
Applicable motor (kW)		0.2	0.4	0.75	1.5	2.2	0.4	0.75	1.5	2.2	4.0	5.5	7.5	11	15
Rating	Type	VFS15S					VFS15								
	Form	2002PL -W	2004PL -W	2007PL -W	2015PL -W	2022PL -W	4004PL -W	4007PL -W	4015PL -W	4022PL -W	4037PL -W	4055PL -W	4075PL -W	4110PL -W	4150PL -W
	Capacity (kVA) Note 1)	0.6	1.3	1.8	3.0	4.2	1.1	1.8	3.1	4.2	7.2	10.9	13.0	21.1	25.1
	Rated output current (A) Note 2)	1.5 (1.5)	3.3 (3.3)	4.8 (4.4)	8.0 (7.9)	11.0 (10.0)	1.5 (1.5)	2.3 (2.1)	4.1 (3.7)	5.5 (5.0)	9.5 (8.6)	14.3 (13.0)	17.0 (17.0)	27.7 (25.0)	33.0 (30.0)
	Rated output voltage Note 3)	3-phase 200V to 240V					3-phase 380V to 500V								
	Overload current rating	150%-60 seconds, 200%-0.5 second					150%-60 seconds, 200% -0.5 second								
Power supply	Voltage- frequency	1-phase 200V to 240V – 50/60Hz					3-phase 380V to 500V - 50/60Hz								
	Allowable fluctuation	Voltage 170V to 264V Note 4), frequency±5%					Voltage 323V to 550V Note 4), frequency ±5%								
	Required Power supply capacity (kVA) Note 5)	0.8	1.4	2.3	4.0	5.4	1.6	2.7	4.7	6.4	10.0	15.2	19.5	26.9	34.9
Protective method (IEC60529)		IP20					IP20								
Cooling method		Self-cooling			Forced air-cooled		Forced air-cooled								
Color		RAL7016					RAL7016								
Built-in filter		EMC filter					EMC filter								

Note 1. Capacity is calculated at 220V for the 240V models, at 440V for the 500V models.

Note 2. Indicates rated output current setting when the PWM carrier frequency (parameter F300) is 4kHz or less. When exceeding 4kHz, the rated output current setting is indicated in the parentheses. It needs to be further reduced for PWM carrier frequencies above 12 kHz.
The rated output current is reduced even further for 500V models with a supply voltage of 480V or more.
The default setting of the PWM carrier frequency is 12kHz.

Note 3. Maximum output voltage is the same as the input voltage.

Note 4. At 180V-264V for the 240V models, at 342V-550V for the 500V models when the inverter is used continuously (load of 100%).

Note 5. Required power supply capacity varies with the value of the power supply side inverter impedance (including those of the input reactor and cables).

■ Common specification

	Item	Specification
Principal control functions	Control system	Sinusoidal PWM control
	Output voltage range Note1)	Adjustable within the range of 50 to 330V (240V class) and 50 to 660V (500V class) by correcting the supply voltage
	Output frequency range	0.1 to 500.0Hz, default setting: 0.5 to 80Hz, maximum frequency: 30 to 500Hz
	Minimum setting steps of frequency	0.1Hz: analog input (when the max. frequency is 100Hz), 0.01Hz: Operation panel setting and communication setting.
	Frequency accuracy	Digital setting: within ±0.01% of the max. frequency (-10 to +60°C) Analog setting: within ±0.5% of the max. frequency (25°C ±10°C)
	Voltage/frequency characteristics	V/f constant, variable torque, automatic torque boost, vector control, automatic energy-saving, dynamic automatic energy-saving control (for fan and pump), PM motor control, V/F 5-point setting, Auto-tuning. Base frequency (20-500Hz) adjusting to 1 & 2, torque boost (0-30%) adjusting to 1 & 2, adjusting frequency at start (0.1-10Hz)
	Frequency setting signal	Setting dial on the front panel, external frequency potentiometer (connectable to a potentiometer with a rated impedance of 1k-10kΩ), 0-10Vdc / -10-+10Vdc (input impedance: 30kΩ), 4-20mAdc (Input impedance: 250Ω).
	Terminal block base frequency	The characteristic can be set arbitrarily by two-point setting. Possible to set: analog input (VIA, VIB, VIC).
	Frequency jump	Three frequencies can be set. Setting of the jump frequency and the range.
	Upper- and lower-limit frequencies	Upper-limit frequency: 0.5 to max. frequency, lower-limit frequency: 0 to upper-limit frequency
	PWM carrier frequency	Adjustable range of 2.0k to 16.0kHz (default: 12.0kHz).
	PID control	Setting of proportional gain, integral gain, differential gain and control waiting time. Checking whether the amount of processing amount and the amount of feedback agree.
Operation specifications	Acceleration/deceleration time	Selectable from among acceleration/deceleration times 1 & 2 & 3 (0.0 to 3600 sec.). Automatic acceleration/deceleration function. S-pattern acceleration/deceleration 1 & 2 and S-pattern adjustable. Control of forced rapid deceleration and dynamic rapid deceleration.
	DC braking	Braking start-up frequency: 0 to maximum frequency, braking rate: 0 to 100%, braking time: 0 to 25.5 seconds, emergency DC braking, motor shaft fixing control.
	Dynamic Braking Drive Circuit	Control and drive circuit is built in the inverter with the braking resistor outside (optional).
	Input terminal function (programmable)	Possible to select from among about 110 functions, such as forward/reverse run signal input, jog run signal input, operation base signal input and reset signal input, to assign to 8 input terminals. Logic selectable between sink and source.
	Output terminal functions (programmable)	Possible to select from among about 150 functions, such as upper/lower limit frequency signal output, low speed detection signal output, specified speed reach signal output and failure signal output, to assign to FL relay output, open collector output terminal, and RY output terminals.
	Forward/reverse run	The RUN and STOP keys on the operation panel are used to start and stop operation, respectively. Forward/reverse run possible through communication and logic inputs from the terminal block.
	Jog run	Jog mode, if selected, allows jog operation from the terminal block and also from remote keypad.
	Preset speed operation	Frequency references + 15-speed operation possible by changing the combination of 4 contacts on the terminal block.
	Retry operation	Capable of restarting automatically after a check of the main circuit elements in case the protective function is activated. 10 times (Max.) (selectable with a parameter)
	Various prohibition settings / Password setting	Possible to write-protect parameters and to prohibit the change of panel frequency settings and the use of operation panel for operation, emergency stop or resetting. Possible to write-protect parameters by setting 4 digits password and terminal input.
	Regenerative power ride-through control	Possible to keep the motor running using its regenerative energy in case of a momentary power failure (default: OFF).
	Auto-restart operation	In the event of a momentary power failure, the inverter reads the rotational speed of the coasting motor and outputs a frequency appropriate to the rotational speed in order to restart the motor smoothly. This function can also be used when switching to commercial power.
	Light-load high-speed operation	Increases the operating efficiency of the machine by increasing the rotational speed of the motor when it is operated under light load.
	Drooping function	When two or more inverters are used to operate a single load, this function prevents load from concentrating on one inverter due to unbalance.
	Override function	External input signal adjustment is possible to the operation frequency command value.
	Relay output signal	1c- contact output and 1a- contact output Note2) Maximum switching capacity : 250Vac-2A , 30Vdc-2A (cosΦ=1: at resistive load), 250Vac-1A (cosΦ=0.4) , 30Vdc-1A (L/R=7ms) Minimum permissible load : 5Vdc-100mA, 24Vdc-5mA

<Continued overleaf>

<Continued>

	Item	Specification
Protective function	Protective function	Stall prevention, current limitation, over-current, output short circuit, over-voltage, over-voltage limitation, undervoltage, ground fault detection, input phase failure, output phase failure, overload protection by electronic thermal function, armature over-current at start-up, load side over-current at start-up, over-torque, undercurrent, overheating, cumulative operation time, life alarm, emergency stop, braking resistor overcurrent / overload, various pre-alarms
	Electronic thermal characteristic	Switching between standard motor and constant-torque VF motor, switching between motors 1 & 2, setting of overload trip time, adjustment of stall prevention levels 1 & 2, selection of overload stall
	Reset function	Panel reset / External signal reset / Power supply reset. This function is also used to save and clear trip records.
Display function	Alarms	Overcurrent, overvoltage, overload, overheat, communication error, under-voltage, setting error, retry in process, upper/lower limits
	Causes of failures	Overcurrent, overvoltage, overheat, output short-circuit, ground fault, overload on inverter, arm overcurrent at start-up, overcurrent on the load side at start-up, CPU fault, EEPROM fault, RAM fault, ROM fault, communication error. (Selectable: dynamic braking resistor overload, emergency stop, under-voltage, small current, over-torque, low-torque, motor overload, input phase failure, output phase failure)
	Monitoring function	Output frequency, frequency command value, operation frequency command, forward/reverse run, output current, input voltage (DC detection), output voltage, torque, inverter load factor, motor load factor, braking resistor load factor, input power, output power, information on input terminals, information on output terminals, overload and region setting, version of CPU1, version of CPU2, PID feedback value, stator frequency, causes of past trips 1to 8, parts replacement alarm, cumulative operation time, number of starting
	Past trip monitoring function	Stores data on the past eight trips: number of trips that occurred in succession, output frequency, frequency command value, forward/reverse run, output current, input voltage (DC detection), output voltage, information on input terminals, information on output terminals, and cumulative operation time when each trip occurred.
	Output for frequency meter	Analog output for meter: 1mA dc full-scale dc ammeter 0 - 20mA (4 to 20mA) output: DC ammeter (allowable load resistance: 600Ω or less) 0 - 10V output: DC voltmeter (allowable load resistance: 1kΩ or more) Maximum resolution: 1/1000
	4-digit 7-segments LED	Frequency: inverter output frequency. Alarm: overcurrent alarm "C", overvoltage alarm "P", overload alarm "L", overheat alarm "H", communication alarm "E". Status: inverter status (frequency, cause of activation of protective function, input/output voltage, output current, etc.) and parameter settings. Free-unit display: arbitrary unit (e.g. rotating speed) corresponding to output frequency.
	Indicator	Lamps indicating the inverter status by lighting, such as RUN lamp, MON lamp, PRG lamp, % lamp, Hz lamp. The charge lamp indicates that the main circuit capacitors are electrically charged.
Environments	Location of use	Indoors; not exposed to direct sunlight, corrosive gas, explosive gas, flammable gas, oil mist, or dust; and vibration of less than 5.9m/s^2 (10 to 55Hz).
	Elevation	3000 m or less (current reduction required over 1000 m) Note 3)
	Ambient temperature	-10 to +60°C Note 4)
	Storage temperature	-25 to +70°C
	Relative humidity	5 to 95% (free from condensation and vapor).

Note 1. Maximum output voltage is the same as the input voltage.

Note 2. A chattering (momentary ON/OFF of contact) is generated by external factors of the vibration and the impact, etc. In particular, please set the filter of 10ms or more, or timer for measures when connecting it directly with input unit terminal of programmable controller. Please use the OUT terminal as much as possible when the programmable controller is connected.

Note 3. Current must be reduced by 1% for each 100 m over 1000 m. For example, 90% at 2000m and 80% at 3000m.

Note 4. When using the inverter in locations with temperatures above 40°C, remove the protective label on the top of the inverter and use the inverter with the output current reduced according to section 6.18.

. To align the inverters side-by-side horizontally, remove the protective label on the top of the inverter before use. When using the inverter in locations with temperatures above 40°C, use the inverter with the output current reduced.

12.2 Outside dimensions and mass

■ Outside dimensions and mass

Voltage class	Applicable motor (kW)	Inverter type	Dimensions (mm)							Drawing	Approx. weight (kg)
			W	H	D	W1	H1	H2	D2		
3-phase 240V	0.4	VFS15-2004PM-W	72	130	120	60	121.5	13	7.5	A	0.9
	0.75	VFS15-2007PM-W			130						1.0
	1.5	VFS15-2015PM-W	105			93				B	1.4
	2.2	VFS15-2022PM-W									1.4
	4.0	VFS15-2037PM-W	140	170	150	126	157	14		C	2.2
	5.5	VFS15-2055PM-W	150	220	170	130	210	12		D	3.5
	7.5	VFS15-2075PM-W									3.6
	11	VFS15-2110PM-W	180	310	190	160	295	20		E	6.8
	15	VFS15-2150PM-W									6.9
1-phase 240V	0.2	VFS15S-2002PL-W	72	130	101	60	131	13	7.5	A	0.8
	0.4	VFS15S-2004PL-W			120		121.5				1.0
	0.75	VFS15S-2007PL-W			135						1.1
	1.5	VFS15S-2015PL-W	105		150	93		12		B	1.6
	2.2	VFS15S-2022PL-W									1.6
3-phase 500V	0.4	VFS15-4004PL-W	107	130	153	93	121.5	13	7.5	B	1.4
	0.75	VFS15-4007PL-W									1.5
	1.5	VFS15-4015PL-W									1.5
	2.2	VFS15-4022PL-W	140	170	160	126	157	14		C	2.4
	4.0	VFS15-4037PL-W									2.6
	5.5	VFS15-4055PL-W	150	220	170	130	210	12		D	3.9
	7.5	VFS15-4075PL-W									4.0
	11	VFS15-4110PL-W	180	310	190	160	295	20		E	6.4
	15	VFS15-4150PL-W									6.5

■ Outline drawing

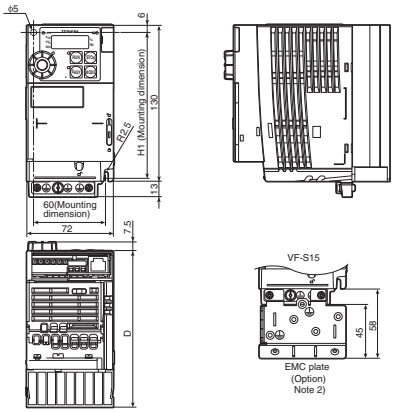

Fig.A

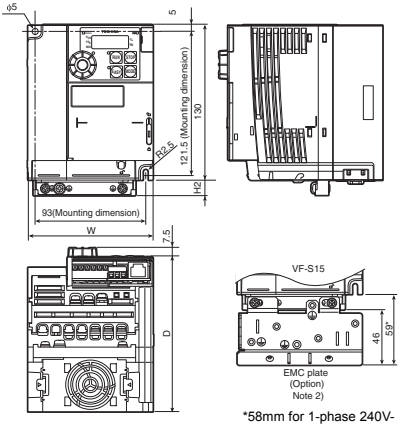

*58mm for 1-phase 240V-1.5, 2.2kW models.

Fig.B

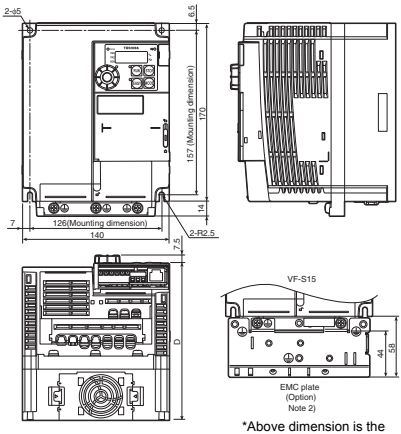

*Above dimension is the size of EMP009Z, 45mm and 59mm for EMP008Z.

Fig.C

Note 1. To make it easier to grasp the dimensions of each inverter, dimensions common to all inverters in these figures are shown with numeric values but not with symbols.
Here are the meanings of the symbols used.
W: Width, H: Height, D: Depth
W1: Mounting dimension (horizontal)
H1: Mounting dimension (vertical)
H2: Height of EMC plate mounting area
D2: Depth of setting dial

Note 2. Here are the available EMC plates.
Fig.A : EMP007Z
Fig.B : EMP008Z
Fig.C : EMP008Z for 3-phase 500V-2.2, 4.0kW models
EMP009Z for 3-phase 240V-4.0kW model
Fig.D : EMP010Z
Fig.E : EMP011Z

Note 3. The models shown in Fig. A and Fig. B are fixed at two points: in the upper left and lower right corners.

Note 4. The model shown in Fig. A is not equipped with a cooling fan.

Note 5. The cooling fan of 1-phase 240V-1.5, 2.2kW models are on the upper side of the inverter.

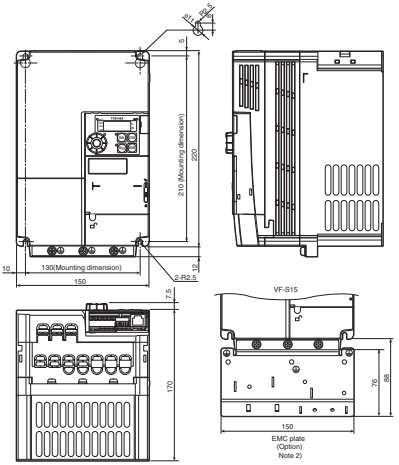
5
210 (Mounting dimension)
220
10
130(Mounting dimension)
150
2-R2.5
12
7.5
170
VF-S15
78
88
150
EMC plate
(Option)
Note 2)

Fig.D

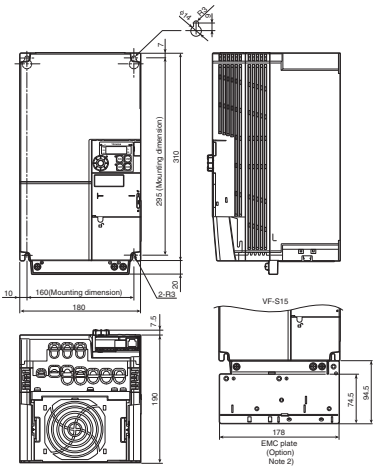
7
295 (Mounting dimension)
310
10
160(Mounting dimension)
180
2-R3
20
7.5
190
VF-S15
74.5
94.5
178
EMC plate
(Option)
Note 2)

Fig.E

13. Before making a service call - Trip information and remedies

13.1 Trip /Alarm causes and remedies

When a problem arises, diagnose it in accordance with the following table.
If it is found that replacement of parts is required or the problem cannot be solved by any remedy described in the table, contact your Toshiba distributor.

[Trip information]

Error code	Failure code	Problem	Possible causes	Remedies
OC1	0001	Overcurrent during acceleration	• The acceleration time ACC is too short.	• Increase the acceleration time ACC.
			• The V/F setting is improper.	• Check the V/F parameter setting.
			• A restart signal is input to the rotating motor after a momentary stop, etc.	• Use F301 (auto-restart) and F302 (ride-through control).
			• A special motor (e.g. motor with a small impedance) is used.	• In case of Pt=0, 1, 7, decrease ub. • In case of Pt=2 to 6, set F415 (Motor rated current) and make an auto-tuning.
			• Low inductance motor especially High speed motor is used.	• Choose the higher power range drive. (1 class up drive is recommended.)
OC2	0002	Overcurrent during deceleration	• The deceleration time dEC is too short.	• Increase the deceleration time dEC.
			• Low inductance motor especially High speed motor is used.	• Choose the higher power range drive. (1 class up drive is recommended.)
OC3	0003	Overcurrent during constant speed operation	• The load fluctuates abruptly. • The load is in an abnormal condition.	• Reduce the load fluctuation. • Check the load (operated machine).
			• Low inductance motor especially High speed motor is used.	• Choose the higher power range drive. (1 class up drive is recommended.)
OCL	0004	Overcurrent (An overcurrent on the load side at start-up)	• The insulation of the output main circuit or motor is defective. • The motor has too small impedance.	• Check the secondary wiring and insulation state. • Set F613=2, 3
OCA	0005	Overcurrent at start-up	• A main circuit element is defective.	• Contact your Toshiba distributor.
* EPH1	0008	Input phase failure	• A phase failure occured in the input line of the main circuit. • The capacitor in the main circuit lacks capacitance.	• Check the main circuit input line for phase failure. • Check the capacitor in the main circuit for exhaustion.
* EPH0	0009	Output phase failure	• A phase failure occurred in the output line of the main circuit.	• Check the main circuit output line, motor, etc. for phase failure. • Select output phase failure detection parameter F605.
OP1	000A	Overvoltage during acceleration	• The input voltage fluctuates abnormally. (1) The power supply has a capacity of 500kVA or more. (2) A power factor improvement capacitor is opened or closed. (3) A system using a thyristor is connected to the same power distribution line.	• Insert a suitable input reactor.
			• A restart signal is input to the rotating motor after a momentary stop, etc.	• Use F301 (auto-restart) and F302 (ride-through control).

* This marking trips can be selected valid or invalid by parameters.

(Continued overleaf)

(Continued)

Error code	Failure code	Problem	Possible causes	Remedies
OP2	000B	Overvoltage during deceleration	• The deceleration time dEC is too short. (Regenerative energy is too large.)	• Increase the deceleration time dEC.
			• Overvoltage limit operation F305 is set to 1. (Disabled).	• Set overvoltage limit operation F305 to 0, 2, 3.
			• The input voltage fluctuates abnormally. (1) The power supply has a capacity of 500kVA or more. (2) A power factor improvement capacitor is opened and closed. (3) A system using a thyristor is connected to the same power distribution line.	• Insert a suitable input reactor.
OP3	000C	Overvoltage during constant-speed operation	• The input voltage fluctuates abnormally. (1) The power supply has a capacity of 500kVA or more. (2) A power factor improvement capacitor is opened or closed. (3) A system using a thyrister is connected to the same power distribution line.	• Insert a suitable input reactor.
			• The motor is in a regenerative state because the load causes the motor to run at a frequency higher than the inverter output frequency.	• Install an optional dynamic braking resistor. (optional)
OL1	000D	Inverter overload	• The acceleration time ACC. is too short.	• Increase the acceleration time ACC.
			• The DC braking amount is too large.	• Reduce the DC braking amount F251 and the DC braking time F252.
			• The V/F setting is improper.	• Check the V/F parameter setting.
			• A restart signal is input to the rotating motor after a momentary stop, etc.	• Use F301 (auto-restart) and F302 (ride-through control).
			• The load is too large.	• Use an inverter with a larger rating.
OL2	000E	Motor overload	• The V/F setting is improper.	• Check the V/F parameter setting.
			• The motor is locked up.	• Check the load (operated machine).
			• Low-speed operation is performed continuously. • An excessive load is applied to the motor during operation.	• Adjust OLM to the overload that the motor can withstand during operation in a low speed range.
OL3	003E	Main module overload	• The carrier frequency is high and load current has increased at low speeds (mainly at 15Hz or less).	• Raise the operation frequency. • Reduce the load. • Reduce the carrier frequency. • When an operating motor is started up at 0Hz, use the auto-restart function. • Set carrier frequency control mode selection F316 to 1 (carrier frequency with automatic reduction).
OLr	000F	Dynamic braking resistor overload trip	• The deceleration time is too short. • Dynamic braking is too large.	• Increase the deceleration time dEC. • Increase the capacity of dynamic braking resistor (wattage) and adjust PBR capacity parameter F309.
* Ot	0020	Over-torque trip 1	• Over-torque reaches to a detection level during operation.	• Enable F615 (over-torque trip selection). • Check system error.
Ot2	0041	Over-torque trip 2	• Output current reached F601 or more and maintain in F452 during power running. • Power running torque reached F441 or more and maintain in F452 during power running.	• Reduce the load. • Increase the stall prevention level or power running torque limit level.

* This marking trips can be selected valid or invalid by parameters.

(Continued overleaf)

(Continued)

Error code	Failure code	Problem	Possible causes	Remedies
* OtC3	0048	Over-torque / Overcurrent fault	• Power running torque or output current reached F593 or more and maintain in F595 during power running.	• Enable F591. • Reduce the load. • Check system error.
* UtC3	0049	Small-torque / Small -current fault	• Power running torque or output current decreased F593 or less and maintain in F595 during power running.	• Enable F591. • Check system error.
OH	0010	Overheat	• The cooling fan does not rotate.	• The fan requires replacement if it does not rotate during operation.
			• The ambient temperature is too high.	• Restart the operation by resetting the inverter after it has cooled down enough.
			• The vent is blocked up.	• Secure sufficient space around the inverter.
			• A heat generating device is installed close to the inverter.	• Do not place any heat generating device near the inverter.
			• The ambient temperature is too low.	• Operate at a specified ambient temperature.
			• Wire of internal thermistor is broken.	• Contact your Toshiba distributor.
OH2	002E	Thermal fault stop command from external device	• A thermal trip command (input terminal function: 46 or 47) is issued by an external control device.	• The motor is overheated, so check whether the current flowing into the motor exceeds the rated current.
E	0011	Emergency stop	• During automatic operation or remote operation, a stop command is entered from the operation panel or a remote input device.	• Reset the inverter. • If the emergency stop signal is input, reset after releasing this signal.
EEP1	0012	EEPROM fault 1	• A data writing error occurs.	• Turn off the inverter, then, turn it again. If it does not recover from the error, contact your Toshiba distributor.
EEP2	0013	EEPROM fault 2	• Power supply is cut off during EYP operation and data writing is aborted. • The error occurred when various data was written.	• Turn the power off temporarily and turn it back on, and then try EYP operation again. • Write the data again. Contact your Toshiba distributor when it happening frequently.
EEP3	0014	EEPROM fault 3	• A data reading error occurred.	• Turn off the inverter, then, turn it again. If it does not recover from the error, contact your Toshiba distributor.
Err2	0015	Main unit RAM fault	• The control RAM is defective.	• Contact your Toshiba distributor.
Err3	0016	Main unit ROM fault	• The control ROM is defective.	• Contact your Toshiba distributor.
Err4	0017	CPU fault 1	• The control CPU is defective.	• Contact your Toshiba distributor.
Err5	0018	Communication error	• The communication was broken off.	• Check the remote control device, cables, etc.
Err8	001B	Optional unit fault 1	• An optional unit has failed. (such as a communication option)	• Check the connection of optional unit.
Err9	001C	Remote keypad disconnection fault	• After run signal is activated by RUN key of the remote keypad, disconnection is occurred in 10 seconds or more.	• In case the remote keypad is disconnected, press STOP key before. • This fault is disabled by F731=1 setting.
* UC	001D	Low-current operation fault	• The output current decreased to a low-current detection level during operation.	• Enable F610 (low-current detection). • Check the suitable detection level for the system (F609, F611, F612). • Contact your Toshiba distributor if the setting is correct.
* UP1	001E	Undervoltage fault (main circuit)	• The input voltage (in the main circuit) is too low.	• Check the input voltage. • Enable F627 (undervoltage trip selection). • To take measures to momentary power failure, set F627=0, Regenerative power ride-through control F302 and Auto-restart control selection F301.

* This marking trips can be selected valid or invalid by parameters.

(Continued overleaf)

(Continued)

Error code	Failure code	Problem	Possible causes	Remedies
Etn Etn1 Etn2 Etn3	0028 0054 0055 0056	Auto-tuning error	• The motor parameter uL, uLu, F405, F415, F417 are not set correctly.	• Set the left column parameters correctly as a motor name plate and make an auto-tuning again. • Set parameter F416 to smaller 70% of the present value, and execute the auto-tuning again.
			• The motor with the capacity of 2 classes or less than the inverter is used. • The output cable is too thin. • The inverter is used for loads other than those of three-phase induction motors.	• Set the left column parameters correctly as a motor name plate and make an auto-tuning again. • Then set F400= 1, when trip occurs.
			• The motor is not connected.	• Connect the motor. • Check whether the secondary magnetic contactor.
			• The motor is rotating.	• Make an auto-tuning again after the rotation of the motor stops.
			• Parameter Pt=6 is set and High speed motor is connected.	• Choose the higher power range drive. (1 class up drive is recommended.)
EF2	0022	Ground fault	• A ground fault occurs in the output cable or the motor.	• Check the cable and the motor for ground faults.
			• Overcurrent of dynamic braking resistor	• Increase the deceleration time dEC. • Set the supply voltage correction F307 to 1 or 3.
			• When inverters are fed by AC power supply and connected with common DC bus link, unnecessary trip occurs.	• Set the parameter F614 to 0 "Disabled".
* SOUt	002F	Step-out (for PM motor drive only)	• The motor shaft is locked. • One output phase is open. • An impact load is applied. • Using the DC braking function.	• Unlock the motor shaft. • Check the interconnect cables between the inverter and the motor. • Prolong the acceleration / deceleration time. • Turn off the Step-out function when using the DC braking function or change the DC braking to Servo lock function.
EtYP	0029	Inverter type error	• It may be a breakdown failure.	• Contact your Toshiba distributor.
E-13	002D	Over speed fault	• The input voltage fluctuates abnormally. • Over speed fault due to the overvoltage limit operation.	• Check the input voltage. • Install an optional dynamic braking resistor. (optional)
* E-18	0032	Analog input break detection fault	• The input signal from VIC is equal to or less than the F633 setting.	• Check the VIC signal cable for breaks. Also, check the input signal value or setting of F633.
E-19	0033	CPU communications error	• A communications error occurs between control CPUs.	• Contact your Toshiba distributor.
E-20	0034	Over torque boost fault	• The automatic torque boost parameter F402 setting is too high. • The motor has too small impedance.	• Set a lower automatic torque boost parameter F402 setting. • Make an auto-tuning.
E-21	0035	CPU fault 2	• The control CPU is defective.	• Contact your Toshiba distributor.
E-23	0037	Optional unit fault 2	• An optional device is defective.	• Contact your Toshiba distributor.
E-26	003A	CPU fault 3	• The control CPU is defective.	• Contact your Toshiba distributor.
E-27	0057	Internal circuit fault	• Internal circuit is defective.	• Contact your Toshiba distributor.
E-31	0063	Heavy cycle of main power ON/OFF	• Main power ON/OFF during running is repeated frequently. • Initial failure if it is caused by other reasons.	• Reduce the frequency of repetition of main power ON/OFF during running. • Contact your Toshiba distributor.
E-32	0040	PTC fault	• PTC thermal protection is occurred.	• Check the PTC in motor.
E-37	0045	Servo lock fault	• The motor shaft is not locked in servo lock operation.	• Reduce the load in servo lock operation.

* This marking trips can be selected valid or invalid by parameters.

(Continued overleaf)

(Continued)

E-39	0047	Auto-tuning error (PM motor)	• When auto-tuning (relating parameters are Pt=6, F400=2), the current of the permanent magnet motor exceeded the threshold level. • The inductance of permanent magnet motor is too small.	• Auto tuning for permanent magnet motor is not allowed for this motor, please measure inductance with the LCR meter etc.

[Alarm information] Each message in the table is displayed to give a warning but does not cause the inverter to trip.

Error code	Problem	Possible causes	Remedies
OFF	ST (assigned standby function) terminal OFF	• The ST-CC (or P24) circuit is opened.	• Close the ST-CC (or P24) circuit.
nOFF	Undervoltage in main circuit	• The supply voltage between R, S and T is under voltage. • Internal communication fault.	• Measure the main circuit supply voltage. If the voltage is at a normal level, the inverter requires repairing for fault.
rtry	Retry in process	• The inverter is in process of retry. • A momentary stop occurred. The motor speed is being detected.	• The inverter restarts automatically. Be careful of the machine because it may suddenly restart.
Err1	Frequency point setting error alarm	• The frequency setting signals at points 1 and 2 are set too close to each other.	• Set the frequency setting signals at points 1 and 2 apart from each other.
CLr	Clear command acceptable	• This message is displayed when pressing the STOP key while an error code is displayed.	• Press the STOP key again to clear the trip.
EOFF	Emergency stop command acceptable	• The operation panel is used to stop the operation in automatic control or remote control mode.	• Press the STOP key for an emergency stop. To cancel the emergency stop, press any other key.
HI/ LO	Setting error alarm / An error code and data are displayed alternately twice each.	• An error is found in a setting when data is reading or writing.	• Check whether the setting is made correctly.
HEAd/ End	Display of first/last data items	• The first and last data item in the AUH data group is displayed.	• Press MODE key to exit the data group.
db	DC braking	• DC braking in process	• The message goes off in several tens of seconds if no problem occurs. Note 1)
E1 E2 E3	Flowing out of excess number of digits	• The number of digits such as frequencies is more than 4. (The upper digits have a priority.)	• Lower the frequency free unit magnification F702.
StOP	Momentary power failure deceleration stop prohibition function activated.	• The slowdown stop prohibition function set with F302 (momentary power failure ride-through operation) is activated.	• To restart operation, reset the inverter or input an operation signal again.
LStP	Auto-stop because of continuous operation at the lower-limit frequency	• The automatic stop function selected with F256 was activated.	• This function is cancelled, when frequency reference reaches LL+0.2Hz or operation command is OFF.
InIt	Parameters in the process of initialization	• Parameters are being initialized to default values.	• Normal if the message disappears after a while (several seconds to several tens of seconds).
A-01	Points setting alarm 1	• In case of Pt = 7, there are same setting value at least two on parameter uL, F190, F192, F194, F196, or F198 except 0.0Hz.	• Set the points to different values.
A-02	Points setting alarm 2	• In case of Pt = 7, the inclination of V/f is too high.	• Set the inclination of V/f to be flat.

Note 1) When the DC braking (DB) function is assigned by using the input terminal function 22 or 23, it is normal if "db" disappears when opening the circuit between the terminal and CC (or P24).

(Continued overleaf)

(Continued)

Error code	Problem	Possible causes	Remedies
A-05	Output frequency upper limit	• An attempt was made to operate at a frequency higher than 10 times the base frequency (uL or F170).	• Operate at a frequency within 10 times the base frequency.
A-17	Operation panel key alarm	• The RUN or STOP key is held down for more than 20 seconds. • The RUN or STOP key is faulty.	• Check the operation panel.
A-27	Control terminal block connection alarm	• Control terminal block comes off. • Internal circuit is defective.	• Install the control terminal block to the inverter. • Contact your Toshiba distributor.
A-28	S3 terminal alarm	• Slide switch SW2 and parameter F147 settings are different.	• Match the settings of SW2 and F147. Power supply OFF and ON after these settings.
Atn	Auto-tuning	• Auto-tuning in process	• Normal if it the message disappears after a few seconds.
A-18	Break in analog signal cable	• The signal input via VIC is below the analog signal detection level set with F633 and setting value of F644 is one or more.	• Check the cables for breaks. And check the setting of input signal or setting value of F633 and F644.
FirE	In forced operation	• "FirE" and operation frequency is displayed alternately in operation of forced fire-speed control.	• It is normal the alarm is gone out after the forced fire-speed control operation.
PASS/ FAIL	Password verification result	• After the password setting (F738), the password was input to F739 (password verification).	• If the password is correct, PASS is displayed and if it is incorrect, FAIL is displayed.
EASY/ Std	Switching display of Easy setting mode / Standard setting mode	• The EASY key was pushed in the standard monitor mode.	• When EASY is displayed, setting mode becomes easy setting mode. When Std is displayed, it becomes standard setting mode.
SEt Note 2)	Input requirement of region setting	• A region setting is not input yet. • Power supplied to the inverter at first time • As checking the region setting parameter SEt is set to 0, inverter return to default setting. • As tYP is set to 13, inverter return to default setting.	• Set a region setting by using setting dial. Refer to section 3.1.
nErr	No trip of past trip	• No new record of past trip, after past trips were clear.	• Normal operation.
n---	No detailed information of past trip	• The detailed information of past trip is read by pushing the center of setting dial during blinking nErr ⇔ number.	• Normal operation. To be returned by pressing MODE key.

Note 2) SEt is blinking after power supply is on. In this time, the keys are not operated.
But parameter SEt is lighting as same as other parameters and is not blinking.

[Prealarm display]

C	Overcurrent alarm	Same as OC (overcurrent)
P	Overvoltage alarm	Same as OP (overvoltage)
L	Overload alarm	Same as OL 1 and OL 2 (overload)
H	Overheat alarm	Same as OH (overheat)
t	Communication alarm	Same as Err5 (communication fault)

If two or more problems arise simultaneously, one of the following alarms appears and blinks.
CP, PL, CPL
The blinking alarms C, P, L, H, t are displayed in this order from left to right.

13.2 Restoring the inverter from a trip

Do not reset the inverter when tripped because of a failure or error before eliminating the cause. Resetting the tripped inverter before eliminating the problem causes it to trip again.

The inverter can be restored from a trip by any of the following operations:

(1) By turning off the power (Keep the inverter off until the LED turns off.)
Note) See inverter trip hold selection F602 for details.
(2) By means of an external signal (Short circuit across RES and CC (or P24) on control terminal block → Open): The reset function must be assigned to the input terminal block. (function number 8, 9)
(3) By panel keypad operation
(4) By inputting a trip clear signal from communication
(Refer to communication manual (E6581913) for details.)

To reset the inverter by panel keypad operation, follow these steps.

1. Press the STOP key and make sure that CLr is displayed.
2. Pressing the STOP key again will reset the inverter if the cause of the trip has already been eliminated.

- When any overload function [OL 1: inverter overload, OL2: motor overload, OLr: braking resistor overload] is active, the inverter cannot be reset by inputting a reset signal from an external device or by operation panel operation before the virtual cooling time has passed.

  Virtual cooling time ... OL 1 : about 30 seconds after the occurrence of a trip
  OL2 : about 120 seconds after a occurrence of a trip
  OLr : about 20 seconds after a occurrence of a trip

- As to OL3 (Main module overload), there is no virtual cooling time.
- In case of a trip due to overheat (OH), the inverter checks the temperature within. Wait until the temperature in the inverter falls sufficiently before resetting the inverter.
- The inverter cannot be reset while the emergency stop signal is being input from the terminal.
- The inverter cannot be reset while the pre-alarm is occurred.

[Caution]
Turning the inverter off then turning it on again resets the inverter immediately. You can use this mode of resetting if there is a need to reset the inverter immediately. Note, however, that this operation may damage the system or the motor if it is repeated frequently.

13.3 If the motor does not run while no trip message is displayed...

If the motor does not run while no trip message is displayed, follow these steps to track down the cause.

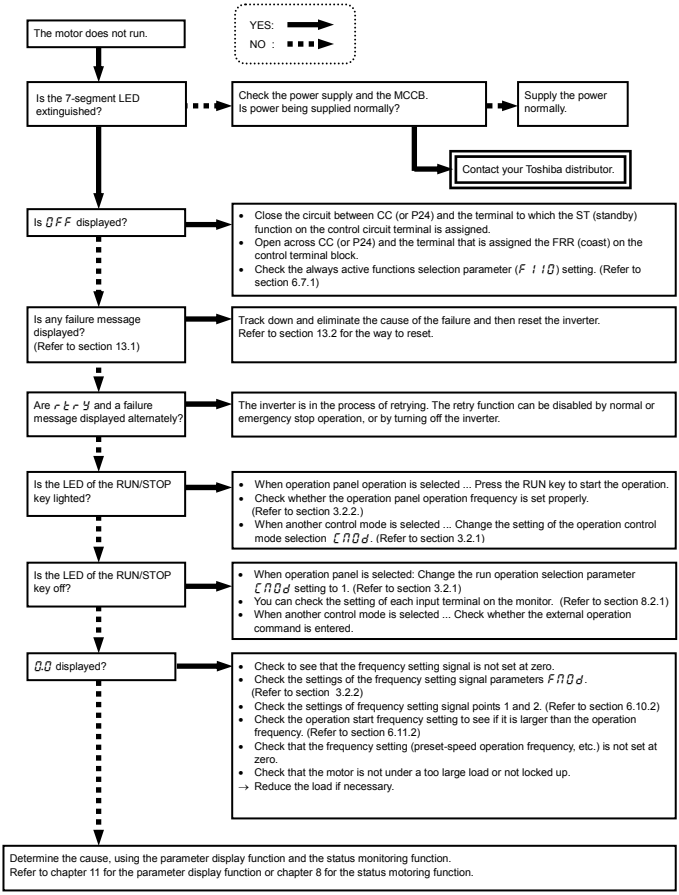

13.4 How to determine the causes of other problems

The following table provides a listing of other problems, their possible causes and remedies.

Problems	Causes and remedies
The motor runs in the wrong direction.	• Invert the phases of the output terminals U/T1, V/T2 and W/T3. • Invert the forward/reverse run-signal terminals of the external input device. (Refer to section 7.2.1) • Change the setting of the parameter Fr in the case of panel operation.
The motor runs but its speed does not change normally.	• The load is too heavy. Reduce the load. • The soft stall function is activated. Disable the soft stall function. (Refer to section 5.6) • The maximum frequency FH and the upper limit frequency UL are set too low. Increase the maximum frequency FH and the upper limit frequency UL. • The frequency setting signal is too low. Check the signal set value, circuit, cables, etc. • Check the setting characteristics (point 1 and point 2 settings) of the frequency setting signal parameters. (Refer to section 6.10.2) • If the motor runs at a low speed, check to see that the stall prevention function is activated because the torque boost value is too large. Adjust the torque boost value (ub) and the acceleration time (ACC). (Refer to section 6.4 and 5.2)
The motor does not accelerate or decelerate smoothly.	• The acceleration time (ACC) or the deceleration time (dEC) is set too short. Increase the acceleration time (ACC) or the deceleration time (dEC).
A too large current flows into the motor.	• The load is too heavy. Reduce the load. • If the motor runs at a low speed, check whether the torque boost value is too large. (Refer to section 6.4)
The motor runs at a higher or lower speed than the specified one.	• The motor has an improper voltage rating. Use a motor with a proper voltage rating. • The motor terminal voltage is too low. Check the setting of the base frequency voltage parameter (uLu). (Refer to section 5.5) Replace the cable with a cable larger in diameter. • The reduction gear ratio, etc., are not set properly. Adjust the reduction gear ratio, etc. • The output frequency is not set correctly. Check the output frequency range. • Adjust the base frequency. (Refer to section 5.5)
The motor speed fluctuates during operation.	• The load is too heavy or too light. Reduce the load fluctuation. • The inverter or motor used does not have a rating large enough to drive the load. Use an inverter or motor with a rating large enough. • Check whether the frequency setting signal changes. • If the V/F control selection parameter Pt is set at 3, check the vector control setting, operation conditions, etc. (Refer to section 6.3)
Parameter settings cannot be changed.	• Change the setting of the parameter setting selection prohibited parameter F700 to 0 (enabled) if it is set to 1 to 4 (prohibited). • Set the verification code to F739, if password has entered by the password setting F738. (Refer to section 6.34.1) • Switch off the logic input terminal, if this terminal is assigned to input terminal menu 200 to 203 (Parameter editing / reading prohibition). • For reasons of safety, some parameters cannot be reprogrammed while the inverter is running. (Refer to section 11.9)

How to cope with parameter setting-related problems

If you forget parameters which have been reset	• You can search for all reset parameters and change their settings. * Refer to section 4.3.1 for details.
If you want to return all reset parameters to their respective default settings	• You can return all parameters which have been reset to their default settings. * Refer to section 4.3.2 for details.

14. Inspection and maintenance

⚠ Warning	
Mandatory action	• The equipment must be inspected daily. If the equipment is not inspected and maintained, errors and malfunctions can not be discovered which could lead to accidents. • Before inspection, perform the following steps. (1) Shut off all input power to the inverter. (2) Wait at least 15 minutes and check to make sure that the charge lamp is no longer lit. (3) Use a tester that can measure DC voltages (400V/800V DC or more), and check that the voltage to the DC main circuits (across PA/+ - PC/-) does not exceed 45V. Performing an inspection without carrying out these steps first could lead to electric shock.

Be sure to inspect the inverter regularly and periodically to prevent it from breaking down because of the environment of use, such as temperature, humidity, dust and vibration, or deterioration of its components with aging.

14.1 Regular inspection

Since electronic parts are susceptible to heat, install the inverter in a cool, well-ventilated and dust-free place. This is essential for increasing the service life.

The purpose of regular inspections is to maintain the correct environment of use and to find any sign of failure or malfunction by comparing current operation data with past operation records.

Subject of inspection	Inspection procedure			Criteria for judgment
	Inspection item	Inspection cycle	Inspection method	
1. Indoor environment	1) Dust, temperature and gas 2) Drop of water or other liquid 3) Room temperature	Occasionally Occasionally Occasionally	1) Visual check, check by means of a thermometer, smell check 2) Visual check 3) Check by means of a thermometer	1) Improve the environment if it is found to be unfavorable. 2) Check for any trace of water condensation. 3) Max. temperature: 60°C
2. Units and components	1) Vibration and noise	Occasionally	Tactile check of the cabinet	If something unusual is found, open the door and check the transformer, reactors, contactors, relays, cooling fan, etc., inside. If necessary, stop the operation.
3. Operation data (output side)	1) Load current 2) Voltage (*) 3) Temperature	Occasionally Occasionally Occasionally	Moving-iron type AC ammeter Rectifier type AC voltmeter Thermometer	To be within the rated current, voltage and temperature. No significant difference from data collected in a normal state.

*) The voltage measured may slightly vary from voltmeter to voltmeter. When measuring the voltage, always take readings from the same circuit tester or voltmeter.

■ Check points

1. Something unusual in the installation environment
2. Something unusual in the cooling system
3. Unusual vibration or noise
4. Overheating or discoloration
5. Unusual odor
6. Unusual motor vibration, noise or overheating
7. Adhesion or accumulation of foreign substances (conductive substances)

■ Cautions about cleaning

To clean the inverter, wipe dirt off only its surface with a soft cloth but do not try to remove dirt or stains from any other part. If stubborn stains persist, remove them by wiping gently with a cloth dampened with neutral detergent or ethanol.
Never use any of the chemicals in the table below; the use of any of them may damage or peel the coating away from molded parts (such as plastic covers and units) of the inverter.

Acetone	Ethylene chloride	Tetrachloroethane
Benzen	Ethyl acetate	Trichloroethylene
Chloroform	Glycerin	Xylene

14.2 Periodical inspection

Make a periodical inspection at intervals of 3 to 6 months depending on the operating conditions.

⚠ Warning	
Mandatory action	•Before inspection, perform the following steps. (1) Shut off all input power to the inverter. (2) Wait at least 15 minutes and check to make sure that the charge lamp is no longer lit. (3) Use a tester that can measure DC voltages (400V/800V DC or more), and check that the voltage to the DC main circuits (across PA/+ - PC/-) does not exceed 45V. Performing an inspection without carrying out these steps first could lead to electric shock.
Prohibited	• Do not replace parts. This could be a cause of electric shock, fire and bodily injury. To replace parts, call your Toshiba distributor.

■ Check items

1. Check to see if all screwed terminals are tightened firmly. If any screw is found loose, tighten it again with a screwdriver.
2. Check to see if all caulked terminals are fixed properly. Check them visually to see that there is no trace of overheating around any of them.
3. Check all cables and wires for damage. Check them visually.
4. Remove dirt and dust. With a vacuum cleaner, remove dirt and dust. When cleaning, clean the vents and the printed circuit boards. Always keep them clean to prevent an accident due to dirt or dust.
5. If no power is supplied to the inverter for a long time, the performance of its large-capacity electrolytic capacitor declines.
   When leaving the inverter unused for a long time, supply it with electricity once every two years, for 5 hours or more each, to recover the performance of the large-capacity electrolytic capacitor. And also check the function of the inverter. It is advisable not to supply the commercial power directly to the inverter but to gradually increase the power supply voltage with a transformer, etc.
6. If the need arises, conduct an insulation resistance test on the main circuit terminal block only, using a 500V insulation resistance tester. Never conduct an insulation resistance test on control terminals other than terminals on the printed circuit board or on control terminals. When testing the motor for insulation resistance, separate it from the inverter in advance by disconnecting the cables from the inverter output terminals U/T1, V/T2 and W/T3. When conducting an insulation resistance test on peripheral circuits other than the motor circuit, disconnect all cables from the inverter so that no voltage is applied to the inverter during the test.
   Standard: Several MΩ or more. (Built-in noise filter cause to detect low insulation resistance.)

(Note) Before an insulation resistance test, always disconnect all cables from the main circuit terminal block and test the inverter separately from other equipment.

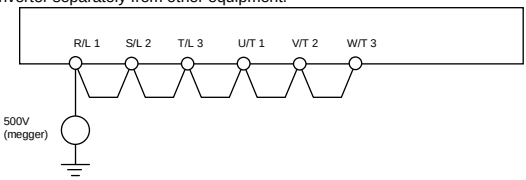

7. Never test the inverter for dielectric strength. A dielectric test may cause damage to its components.
8. Voltage and temperature check
   Recommended voltmeter : Input side ... Moving-iron type voltmeter ( )
   Output side ... Rectifier type voltmeter ( )
   It will be very helpful for detecting a defect if you always measure and record the ambient temperature before, during and after the operation.

14

■ Replacement of expendable parts

The inverter is composed of a large number of electronic parts including semiconductor devices.
The following parts deteriorate with the passage of time because of their composition or physical properties.
The use of aged or deteriorated parts leads to degradation in the performance or a breakdown of the inverter. To avoid such trouble, the inverter should be checked periodically.

Note) Generally, the life of a part depends on the ambient temperature and the conditions of use. The life spans listed below are applicable to parts when used under normal environmental conditions.

1) Cooling fan
The fan for cooling heat-generating parts has a service life of about ten years. The fan also needs to be replaced if it makes a noise or vibrates abnormally.

2) Smoothing capacitor
The smoothing aluminum electrolytic capacitor in the main circuit DC section degrades in performance because of ripple currents, etc. It becomes necessary to replace the capacitor after it is used for about 10 years under normal conditions. Since the smoothing capacitor is mounted on a printed circuit board, it must be replaced together with the circuit board.
<Criteria for appearance check>
- Absence of liquid leak
- Safety valve in the depressed position
- Measurement of electrostatic capacitance and insulation resistance

Note: Checking the life alarm function is useful for roughly determining the parts replacement time.
To ensure customer safety, you should never replace parts on your own. (It is also possible to monitor the part replacement alarm and output a signal.)

■ Standard replacement cycles of principal parts

As guides, the table below lists part replacement cycles that were estimated based on the assumption that the inverter would be used in a normal use environment under normal conditions (ambient temperature, ventilation conditions, and energizing time). The replacement cycle of each part does not mean its service life but the number of years over which its failure rate does not increase significantly.
Also, make use of the life alarm function.

Part name	Standard replacement cycle Note 1:	Replacement mode and others
Cooling fan	10 years	Replacement with a new one (To be determined after inspection)
Main circuit aluminum electrolytic capacitor	10 years Note 2	Replacement with a new one (To be determined after inspection)
Relays	-	Whether to replace or not depends on the check results
Aluminum electrolytic capacitor mounted on a printed circuit board	10 years Note 2	Replace with a new circuit board (To be determined after inspection)

Note 1: The replacement cycle is calculated on the assumption that the average ambient temperature over a year is 40°C and operates 24 hours a day. The environment must be free of corrosive gases, oil mist and dust.
Note 2: Figures are for when the inverter output current is 80% of the rated current of the inverter.
Note 3: The life of parts varies greatly depending on the operating environment.

14.3 Making a call for servicing

If defective conditions are encountered, please contact your Toshiba distributor.
When making a call for servicing, please inform us of the contents of the rating label on the right panel of the inverter, the presence or absence of optional devices, etc., in addition to the details of the failure.

14.4 Keeping the inverter in storage

Take the following precautions when keeping the inverter in storage temporarily or for a long period of time.

1. Store the inverter in a well-ventilated place away from heat, damp, dust and metal powder.
2. If no power is supplied to the inverter for a long time, the performance of its large-capacity electrolytic capacitor declines.
   When leaving the inverter unused for a long time, supply it with electricity once every two years, for 5 hours or more each, to recover the performance of the large-capacity electrolytic capacitor. And also check the function of the inverter. It is advisable not to supply the commercial power directly to the inverter but to gradually increase the power supply voltage with a transformer, etc.

15. Warranty

Any part of the inverter that proves defective will be repaired and adjusted free of charge under the following conditions:

1. This warranty applies only to the inverter main unit.
2. Any part of the inverter which fails or is damaged under normal use within twelve months from the date of delivery shall be repaired free of charge.
3. For the following kinds of failure or damage, the repair cost shall be borne by the customer even within the warranty period.
   - Failure or damage caused by improper or incorrect use or handling, or unauthorized repair or modification of the inverter
   - Failure or damage caused by the inverter falling or an accident during transportation after the purchase
   - Failure or damage caused by fire, salty water or wind, corrosive gas, earthquake, storm or flood, lightning, abnormal voltage supply, or other natural disasters
   - Failure or damage caused by the use of the inverter for any purpose or application other than the intended one
4. All expenses incurred by Toshiba for on-site services shall be charged to the customer, unless a service contract is signed beforehand between the customer and Toshiba, in which case the service contract has priority over this warranty.

16. Disposal of the inverter

Caution	
Mandatory action	• If you dispose of the inverter, have it done by a specialist in industry waste disposal(*). If you dispose of the inverter by yourself, this can result in explosion of capacitor or produce noxious gases, resulting in injury. (*) Persons who specialize in the processing of waste and known as "industrial waste product collectors and transporters" or "industrial waste disposal persons". Please observe any applicable law, regulation, rule or ordinance for industrial waste disposal.

For safety's sake, do not dispose of the disused inverter yourself but ask an industrial waste disposal agent.

Disposing of the inverter improperly could cause its capacitor to explode and emit toxic gas, causing injury to persons.

TOSHIBA

TOSHIBA INDUSTRIAL PRODUCTS
SALES CORPORATION

Global Industrial Products Business Unit
9-11, Nihonbashi-Honcho 4-Chome,
Chuo-ku, Tokyo, 103-0023, Japan
TEL : +81-(0)3-3457-8128
FAX : +81-(0)3-5444-9252

TOSHIBA INTERNATIONAL CORPORATION
13131 West Little York RD., Houston,
TX 77041, U.S.A
TEL : +1-713-466-0277
FAX : +1-713-466-8773

TOSHIBA INFRASTRUCTURE SYSTEMS
SOUTH AMERICA LTD
Av. Ibirapuera 2.332, Torre I, 5th floor
Moema, 04028-003, Sao Paulo-SP, Brazil
TEL : +55-(0)11-4083-7900
FAX : +55-(0)11- 4083-7910

TOSHIBA ASIA PACIFIC PTE., LTD
152 Beach Rd., #16-00 Gateway East,
Singapore 189721
TEL : +65-6297-0990
FAX : +65-6297-5510

TOSHIBA CHINA CO., LTD
HSBC Tower, 1000 Lujiazui Ring Road,
Pudong New Area, Shanghai
200120, The People's Republic of China
TEL : +86-(0)21-6841-5666
FAX : +86-(0)21-6841-1161

TOSHIBA INTERNATIONAL CORPORATION PTY., LTD
2 Morton Street Parramatta, NSW2150, Australia
TEL : +61-(0)2-9768-6600
FAX : +61-(0)2-9890-7542

TOSHIBA CIS LIMITED LIABILITY COMPANY
Kievskaya st., entrance 7, floor 12
Moscow, 121059, Russian Federation
TEL : +7-(0)495-642-8929
FAX : +7-(0)495-642-8908

TOSHIBA INDIA PRIVATE LIMITED
3rd Floor, Building No.10, Tower B,
Phase-II, DLF Cyber City, Gurgaon-122002 India
TEL : +91-(0)124-4996600
FAX : +91-(0)124-4996623

TOSHIBA INFORMATION, INDUSTRIAL AND POWER
SYSTEMS TAIWAN CORP.
6F, No66, Sec1 Shin Sheng N.RD, Taipei, Taiwan
TEL : +886-(0)2-2581-3639
FAX : +886-(0)2-2581-3631

- For further information, please contact your nearest Toshiba Representative or Global Industrial Products Business Unit-Producer Goods.
- The data given in this manual are subject to change without notice.

2012-04