ABB drives

User's manual
ACS310 drives

Power and productivity
for a better world™

List of related manuals

Drive hardware manuals and guides	**Code (English)**
ACS310 short form user's manual	*3AUA0000044200*
ACS310 user's manual	*3AUA0000044201*

Option manuals and guides	
MFDT-01 FlashDrop user's manual	*3AFE68591074*
MREL-01 relay output extension module user's manual for ACS310/ACS350	*3AUA0000035974*
MUL1-R1 installation instructions for ACS150, ACS310, ACS350 and ACS355	*3AFE68642868*
MUL1-R3 installation instructions for ACS310, ACS350 and ACS355	*3AFE68643147*
MUL1-R4 installation instructions for ACS310 and ACS350	*3AUA0000025916*
SREA-01 Ethernet adapter module quick start-up guide	*3AUA0000042902*
SREA-01 Ethernet adapter module user's manual	*3AUA0000042896*

Option manuals and guides	
Guide for capacitor reforming in ACS50, ACS55, ACS150, ACS310, ACS350, ACS355, ACS550 and ACH550	*3AFE68735190*

You can find manuals and other product documents in PDF format on the Internet. See section *Document library on the Internet* on the inside of the back cover. For manuals not available in the Document library, contact your local ABB representative.

User’s manual

ACS310

Table of contents

Safety

Mechanical installation

Electrical installation

Start-up and control with I/O

3AUA0000044201 Rev C
EN
EFFECTIVE: 2011-12-13

© 2011 ABB Oy. All Rights Reserved.

Table of contents

List of related manuals 2

1. Safety

What this chapter contains 15
Use of warnings 15
Safety in installation and maintenance 16
Electrical safety 16
General safety 17
Safe start-up and operation 17
General safety 17

2. Introduction to the manual

What this chapter contains 19
Applicability 19
Target audience 19
Purpose of the manual 19
Contents of this manual 20
Related documents 21
Categorization by frame size 21
Terms and abbreviations 21
Quick installation and commissioning flowchart 22

3. Operation principle and hardware description

What this chapter contains 23
Operation principle 23
Product overview 24
Layout 24
Power connections and control interfaces 25
Type designation label 26
Type designation key 27

4. Mechanical installation

What this chapter contains 29
Checking the installation site 29
Requirements for the installation site 29
Required tools 30
Unpacking 31
Checking the delivery 31
Installing 32
Install the drive 32
Fasten clamping plates 34

5. Planning the electrical installation

What this chapter contains . . . 35
Implementing the AC power line connection . . . 35
Selecting the supply disconnecting device (disconnecting means) . . . 35
European union . . . 36
Other regions . . . 36
Checking the compatibility of the motor and drive . . . 36
Selecting the power cables . . . 36
General rules . . . 36
Alternative power cable types . . . 37
Motor cable shield . . . 37
Additional US requirements . . . 38
Selecting the control cables . . . 38
General rules . . . 38
Relay cable . . . 39
Control panel cable . . . 39
Routing the cables . . . 39
Control cable ducts . . . 40
Protecting the drive, input power cable, motor and motor cable in short-circuit situations and against thermal overload . . . 41
Protecting the drive and input power cable in short-circuit situations . . . 41
Protecting the motor and motor cable in short-circuit situations . . . 41
Protecting the drive, motor cable and input power cable against thermal overload . . . 41
Protecting the motor against thermal overload . . . 41
Using residual current devices (RCD) with the drive . . . 42
Implementing a bypass connection . . . 42
Protecting the contacts of relay outputs . . . 42

6. Electrical installation

What this chapter contains . . . 45
Checking the insulation of the assembly . . . 45
Drive . . . 45
Input power cable . . . 45
Motor and motor cable . . . 46
Checking the compatibility with IT (ungrounded) and corner-grounded TN systems . . . 46
Connecting the power cables . . . 47
Connection diagram . . . 47
Connection procedure . . . 48
Connecting the control cables . . . 49
I/O terminals . . . 49
Default I/O connection diagram . . . 52
Connection procedure . . . 53
Connecting the embedded fieldbus . . . 54
Connection diagram . . . 54

7. Installation checklist

Checking the installation . . . 55

8. Start-up and control with I/O

What this chapter contains . . . 57
How to start up the drive . . . 57
How to start up the drive without a control panel . . . 58
How to perform a manual start-up . . . 59
How to perform a guided start-up . . . 62
How to control the drive through the I/O interface . . . 65

9. Control panels

What this chapter contains . . . 67
About control panels . . . 67
Applicability . . . 67
Basic control panel . . . 69
Features . . . 69
Overview . . . 70
Operation . . . 71
Output mode . . . 74
Reference mode . . . 75
Parameter mode . . . 76
Copy mode . . . 78
Basic control panel alarm codes . . . 79
Assistant control panel . . . 80
Features . . . 80
Overview . . . 81
Operation . . . 82
Output mode . . . 86
Parameters mode . . . 88
Assistants mode . . . 91
Changed parameters mode . . . 93
Fault logger mode . . . 94
Time and date mode . . . 95
Parameter backup mode . . . 97
IO settings mode . . . 100

10. Application macros

What this chapter contains . . . 101
Overview of macros . . . 101
Summary of the I/O connections of the application macros . . . 103
ABB standard macro . . . 104
Default I/O connections . . . 104
3-wire macro . . . 105
Default I/O connections . . . 105
Alternate macro . . . 106
Default I/O connections . . . 106
Motor potentiometer macro . . . 107
Default I/O connections . . . 107
Hand/Auto macro . . . 108
Default I/O connections . . . 108

PID control macro . . . 109
Default I/O connections . . . 109
PFC control macro . . . 110
Default I/O connections . . . 110
SPFC control macro . . . 111
Default I/O connections . . . 111
User macros . . . 112

11. Program features

What this chapter contains . . . 113
Start-up assistant . . . 113
Introduction . . . 113
Default order of the tasks . . . 114
List of the tasks and the relevant drive parameters . . . 115
Contents of the assistant displays . . . 117
Local control vs. external control . . . 117
Local control . . . 118
External control . . . 118
Settings . . . 118
Diagnostics . . . 119
Block diagram: Start, stop, direction source for *EXT1* . . . 119
Block diagram: Reference source for *EXT1* . . . 119
Reference types and processing . . . 120
Settings . . . 120
Diagnostics . . . 120
Reference trimming . . . 121
Settings . . . 121
Example . . . 122
Programmable analog inputs . . . 122
Settings . . . 122
Diagnostics . . . 123
Programmable analog output . . . 123
Settings . . . 123
Diagnostics . . . 123
Programmable digital inputs . . . 124
Settings . . . 124
Diagnostics . . . 125
Programmable relay output . . . 125
Settings . . . 125
Diagnostics . . . 125
Frequency input . . . 125
Settings . . . 125
Diagnostics . . . 126
Transistor output . . . 126
Settings . . . 126
Diagnostics . . . 126
Actual signals . . . 126
Settings . . . 126
Diagnostics . . . 127
Power loss ride-through . . . 127

Settings . . . 127
DC magnetizing . . . 128
Settings . . . 128
Maintenance trigger . . . 128
Settings . . . 128
Acceleration and deceleration ramps . . . 128
Settings . . . 128
Critical speeds . . . 129
Settings . . . 129
Constant speeds . . . 129
Settings . . . 129
Custom U/f ratio . . . 130
Settings . . . 130
Diagnostics . . . 130
IR compensation . . . 131
Settings . . . 131
Programmable protection functions . . . 131
AI<Min . . . 131
Panel loss . . . 131
External fault . . . 131
Stall protection . . . 131
Motor thermal protection . . . 132
Earth fault protection . . . 132
Incorrect wiring . . . 132
Input phase loss . . . 133
Pre-programmed faults . . . 133
Overcurrent . . . 133
DC overvoltage . . . 133
DC undervoltage . . . 133
Drive temperature . . . 133
Short circuit . . . 133
Internal fault . . . 133
Operation limits . . . 133
Settings . . . 133
Power limit . . . 134
Automatic resets . . . 134
Settings . . . 134
Diagnostics . . . 134
Supervisions . . . 134
Settings . . . 134
Diagnostics . . . 134
Parameter lock . . . 135
Settings . . . 135
PID control . . . 135
Process controller PID1 . . . 135
External/Trim controller PID2 . . . 135
Block diagrams . . . 136
Settings . . . 138
Diagnostics . . . 138
Example . . . 138
Sleep function for the process PID (PID1) control . . . 140

Example . . . 141
Settings . . . 142
Diagnostics . . . 142
Motor temperature measurement through the standard I/O . . . 142
Settings . . . 143
Diagnostics . . . 143
Timed functions . . . 144
Examples . . . 145
Settings . . . 146
User load curve . . . 147
Settings . . . 147
Diagnostics . . . 147
Energy optimizer . . . 148
Settings . . . 148
Energy saving . . . 148
Settings . . . 148
Diagnostics . . . 148
Pump cleaning . . . 149
Settings . . . 149
Load analyzer . . . 150
Peak value logger . . . 150
Amplitude loggers . . . 150
Settings . . . 151
Diagnostics . . . 151
PFC and SPFC control . . . 152
PFC control . . . 152
SPFC control . . . 152
Settings . . . 155
Diagnostics . . . 155
Connection diagram example . . . 156
Pipe fill . . . 157
Reference ramping . . . 157
PID reference ramping . . . 158
Settings . . . 158

12. Actual signals and parameters

What this chapter contains . . . 159
Terms and abbreviations . . . 159
Fieldbus equivalent . . . 160
Default values with different macros . . . 161
Actual signals in the short parameter view . . . 162
04 FAULT HISTORY . . . 162
Parameters in the short parameter view . . . 162
11 REFERENCE SELECT . . . 162
12 CONSTANT SPEEDS . . . 162
13 ANALOG INPUTS . . . 162
14 RELAY OUTPUTS . . . 162
16 SYSTEM CONTROLS . . . 162
20 LIMITS . . . 162
21 START/STOP . . . 162

22 ACCEL/DECEL . . . 163
99 START-UP DATA . . . 163
All actual signals . . . 164
01 OPERATING DATA . . . 164
03 FB ACTUAL SIGNALS . . . 167
04 FAULT HISTORY . . . 169
All parameters . . . 171
10 START/STOP/DIR . . . 171
11 REFERENCE SELECT . . . 173
12 CONSTANT SPEEDS . . . 177
13 ANALOG INPUTS . . . 180
14 RELAY OUTPUTS . . . 181
15 ANALOG OUTPUTS . . . 184
16 SYSTEM CONTROLS . . . 185
18 FREQ IN & TRAN OUT . . . 190
20 LIMITS . . . 192
21 START/STOP . . . 193
22 ACCEL/DECEL . . . 196
25 CRITICAL SPEEDS . . . 199
26 MOTOR CONTROL . . . 200
29 MAINTENANCE TRIG . . . 203
30 FAULT FUNCTIONS . . . 204
31 AUTOMATIC RESET . . . 210
32 SUPERVISION . . . 212
33 INFORMATION . . . 214
34 PANEL DISPLAY . . . 215
35 MOTOR TEMP MEAS . . . 220
36 TIMED FUNCTIONS . . . 222
37 USER LOAD CURVE . . . 226
40 PROCESS PID SET 1 . . . 227
41 PROCESS PID SET 2 . . . 239
42 EXT / TRIM PID . . . 241
44 PUMP PROTECTION . . . 242
45 ENERGY SAVING . . . 248
46 PUMP CLEANING . . . 249
52 PANEL COMM . . . 250
53 EFB PROTOCOL . . . 251
64 LOAD ANALYZER . . . 253
81 PFC CONTROL . . . 256
98 OPTIONS . . . 273
99 START-UP DATA . . . 274

13. Fieldbus control with the embedded fieldbus

What this chapter contains . . . 277
System overview . . . 277
Setting up communication through the embedded Modbus . . . 279
Drive control parameters . . . 281
Fieldbus control interface . . . 283
Control word and Status word . . . 283
References . . . 283

Actual values . . . 283
Fieldbus references . . . 284
Reference selection and correction . . . 284
Fieldbus reference scaling . . . 286
Reference handling . . . 287
Actual value scaling . . . 287
Modbus mapping . . . 288
Register mapping . . . 288
Function codes . . . 290
Exception codes . . . 290
Communication profiles . . . 291
ABB drives communication profile . . . 291
DCU communication profile . . . 296

14. Fault tracing

What this chapter contains . . . 301
Safety . . . 301
Alarm and fault indications . . . 301
How to reset . . . 301
Fault history . . . 302
Alarm messages generated by the drive . . . 303
Alarms generated by the Basic control panel . . . 307
Fault messages generated by the drive . . . 310
Embedded fieldbus faults . . . 317
No master device . . . 317
Same device address . . . 317
Incorrect wiring . . . 317

15. Maintenance and hardware diagnostics

What this chapter contains . . . 319
Maintenance intervals . . . 319
Cooling fan . . . 320
Replacing the cooling fan (frame sizes R1…R4) . . . 320
Capacitors . . . 321
Reforming the capacitors . . . 321
Power connections . . . 322
Control panel . . . 322
Cleaning the control panel . . . 322
Changing the battery in the Assistant control panel . . . 322
LEDs . . . 323

16. Technical data

What this chapter contains . . . 325
Ratings . . . 326
Definitions . . . 327
Sizing . . . 327
Derating . . . 327
Power cable sizes and fuses . . . 329

Dimensions, weights and free space requirements . . . 331
Dimensions and weights . . . 331
Free space requirements . . . 331
Losses, cooling data and noise . . . 332
Losses and cooling data . . . 332
Noise . . . 333
Terminal and lead-through data for the power cables . . . 333
Terminal and lead-through data for the control cables . . . 333
Electric power network specification . . . 334
Motor connection data . . . 334
Control connection data . . . 336
Clearance and creepage distance . . . 336
Efficiency . . . 336
Degrees of protection . . . 336
Ambient conditions . . . 337
Materials . . . 338
Applicable standards . . . 338
CE marking . . . 339
Compliance with the European EMC Directive . . . 339
Compliance with EN 61800-3:2004 . . . 339
Definitions . . . 339
Category C1 . . . 339
Category C2 . . . 340
Category C3 . . . 340
UL marking . . . 341
UL checklist . . . 341
C-Tick marking . . . 341
RoHS marking . . . 342
Declaration of incorporation . . . 342

17. Dimension drawings

Frame sizes R0 and R1, IP20 (cabinet installation) / UL open . . . 344
Frame sizes R0 and R1, IP20 / NEMA 1 . . . 345
Frame size R2, IP20 (cabinet installation) / UL open . . . 346
Frame size R2, NEMA 1 . . . 347
Frame size R3, IP20 (cabinet installation) / UL open . . . 348
Frame size R3, NEMA 1 . . . 349
Frame size R4, IP20 (cabinet installation) / UL open . . . 350
Frame size R4, NEMA 1 . . . 351

18. INDEX

Product and service inquiries . . . 361
Product training . . . 361
Providing feedback on ABB Drives manuals . . . 361
Document library on the Internet . . . 361

1

Safety

What this chapter contains

The chapter contains safety instructions which you must follow when installing, operating and servicing the drive. If ignored, physical injury or death may follow, or damage may occur to the drive, motor or driven equipment. Read the safety instructions before you work on the drive.

Use of warnings

Warnings caution you about conditions which can result in serious injury or death and/or damage to the equipment, and advise on how to avoid the danger. The following warning symbols are used in this manual:

Electricity warning warns of hazards from electricity which can cause physical injury and/or damage to the equipment.

General warning warns about conditions, other than those caused by electricity, which can result in physical injury and/or damage to the equipment.

Safety in installation and maintenance

These warnings are intended for all who work on the drive, motor cable or motor.

Electrical safety

WARNING! Ignoring the following instructions can cause physical injury or death, or damage to the equipment.

Only qualified electricians are allowed to install and maintain the drive!

- Never work on the drive, motor cable or motor when input power is applied. After disconnecting the input power, always wait for 5 minutes to let the intermediate circuit capacitors discharge before you start working on the drive, motor or motor cable.

  Always ensure by measuring with a multimeter (impedance at least 1 Mohm) that there is no voltage between the drive input phases U1, V1 and W1 and the ground.
- Do not work on the control cables when power is applied to the drive or to the external control circuits. Externally supplied control circuits may carry dangerous voltage even when the input power of the drive is switched off.
- Do not make any insulation or voltage withstand tests on the drive.
- Disconnect the internal EMC filter when installing the drive on an IT system (an ungrounded power system or a high-resistance-grounded [over 30 ohms] power system), otherwise the system is connected to ground potential through the EMC filter capacitors. This may cause danger or damage the drive. See page *46*. **Note:** When the internal EMC filter is disconnected, the drive is not EMC compatible.
- Disconnect the internal EMC filter when installing the drive on a corner-grounded TN system, otherwise the drive will be damaged. See page *46*. **Note:** When the internal EMC filter is disconnected, the drive is not EMC compatible.
- All ELV (extra low voltage) circuits connected to the drive must be used within a zone of equipotential bonding, ie within a zone where all simultaneously accessible conductive parts are electrically connected to prevent hazardous voltages appearing between them. This is accomplished by a proper factory grounding.

Note:

- Even when the motor is stopped, dangerous voltage is present at the power circuit terminals U1, V1, W1 and U2, V2, W2.

General safety

WARNING! Ignoring the following instructions can cause physical injury or death, or damage to the equipment.

- The drive is not field repairable. Never attempt to repair a malfunctioning drive; contact your local ABB representative or Authorized Service Center for replacement.
- Make sure that dust from drilling does not enter the drive during the installation. Electrically conductive dust inside the drive may cause damage or lead to malfunction.
- Ensure sufficient cooling.

Safe start-up and operation

These warnings are intended for all who plan the operation, start up or operate the drive.

General safety

WARNING! Ignoring the following instructions can cause physical injury or death, or damage to the equipment.

- Before adjusting the drive and putting it into service, make sure that the motor and all driven equipment are suitable for operation throughout the speed range provided by the drive. The drive can be adjusted to operate the motor at speeds above and below the speed provided by connecting the motor directly to the power line.
- Do not activate automatic fault reset functions if dangerous situations can occur. When activated, these functions reset the drive and resume operation after a fault.
- Do not control the motor with an AC contactor or disconnecting device (disconnecting means); use instead the control panel start and stop keys and or external commands (I/O or fieldbus). The maximum allowed number of charging cycles of the DC capacitors (that is, power-ups by applying power) is two per minute and the maximum total number of chargings is 15 000.

Note:

- If an external source for start command is selected and it is ON, the drive starts immediately after an input voltage break or fault reset unless the drive is configured for 3-wire (a pulse) start/stop.
- When the control location is not set to local (LOC not shown on the display), the stop key on the control panel does not stop the drive. To stop the drive using the control panel, first press the LOC/REM key and then the stop key .

2

Introduction to the manual

What this chapter contains

The chapter describes applicability, the target audience and purpose of this manual. It describes the contents of this manual and refers to a list of related manuals for more information. The chapter also contains a flowchart of steps for checking the delivery, installing and commissioning the drive. The flowchart refers to chapters/sections in this manual.

Applicability

The manual is applicable to the ACS310 drive firmware version 4.00E or later. See parameter *3301 FIRMWARE* on page *214*.

Target audience

The reader is expected to know the fundamentals of electricity, wiring, electrical components and electrical schematic symbols.

The manual is written for readers worldwide. Both SI and imperial units are shown. Special US instructions for installations in the United States are given.

Purpose of the manual

This manual provides information needed for planning the installation, installing, commissioning, using and servicing the drive.

Contents of this manual

The manual consists of the following chapters:

- *Safety* (page *15*) gives safety instructions you must follow when installing, commissioning, operating and servicing the drive.
- *Introduction to the manual* (this chapter, page *19*) describes applicability, target audience, purpose and contents of this manual. It also contains a quick installation and commissioning flowchart.
- *Operation principle and hardware description* (page *23*) describes the operation principle, layout, power connections and control interfaces, type designation label and type designation information in short.
- *Mechanical installation* (page *29*) tells how to check the installation site, unpack, check the delivery and install the drive mechanically.
- *Planning the electrical installation* (page *35*) tells how to check the compatibility of the motor and the drive and select cables, protections and cable routing.
- *Electrical installation* (page *45*) tells how to check the insulation of the assembly and the compatibility with IT (ungrounded) and corner-grounded TN systems as well as connect power cables, control cables and embedded fieldbus.
- *Installation checklist* (page *55*) contains a checklist for checking the mechanical and electrical installation of the drive.
- *Start-up and control with I/O* (page *57*) tells how to start up the drive as well as how to start, stop, change the direction of the motor rotation and adjust the motor speed through the I/O interface.
- *Control panels* (page *67*) describes the control panel keys, LED indicators and display fields. It also instructs in using the panel in control, monitoring and changing the settings.
- *Application macros* (page *101*) gives a brief description of each application macro together with a wiring diagram showing the default control connections. It also explains how to save a user macro and how to recall it.
- *Program features* (page *113*) describes program features with lists of related user settings, actual signals, and fault and alarm messages.
- *Actual signals and parameters* (page *159*) describes actual signals and parameters. It also lists the default values for the different macros.
- *Fieldbus control with the embedded fieldbus* (page *277*) tells how the drive can be controlled by external devices over a communication network using embedded fieldbus.
- *Fault tracing* (page *301*) tells how to reset faults and view fault history. It lists all alarm and fault messages including the possible cause and corrective actions.
- *Maintenance and hardware diagnostics* (page *319*) contains preventive maintenance instructions and LED indicator descriptions.

- *Technical data* (page *325*) contains technical specifications of the drive, eg ratings, sizes and technical requirements as well as provisions for fulfilling the requirements for CE and other marks.
- *Dimension drawings* (page *343*) shows dimension drawings of the drive.
- *Further information* (inside of the back cover, page *353*) tells how to make product and service inquiries, get information on product training, provide feedback on ABB Drives manuals and find documents on the Internet.

Related documents

See *List of related manuals* on page *2*.

Categorization by frame size

The ACS310 is manufactured in frame sizes R0…R4. Some instructions and other information which only concern certain frame sizes are marked with the symbol of the frame size (R0…R4). To identify the frame size of your drive, see the table in section *Ratings* on page *326*.

Terms and abbreviations

Term	Definition
EIA-485	Standard defining the electrical characteristics of drivers and receivers for use in balanced digital multipoint systems.
EMC	Electromagnetic compatibility
FlashDrop	Hand-held drive programming tool that can also be used to copy parameters to a drive that is not powered up.
Frame (size)	Relates to the construction type of the component in question. The term is often used in reference to a group of components that share a similar mechanical construction. To determine the frame size of a component, refer to the rating tables in chapter *Technical data*.
IGBT	Insulated gate bipolar transistor; a voltage-controlled semiconductor type widely used in inverters due to its easy controllability and high switching frequency.
Inverter	An inverter converts the DC voltage to AC voltage. Its operation is controlled by switching the IGBTs.
I/O	Input/Output
Modbus RTU	Open, serial messaging protocol
MREL	MREL relay output extension module
MRP code	Material Requirement Planning code
Pt100	A type of resistance thermometer (temperature sensor)
PTC	Positive Temperature Coefficient sensor (temperature sensor)
RS-232	Standard for serial binary single-ended data and control signals

Quick installation and commissioning flowchart

Task	See
Identify the frame size of your drive: R0…R4.	*Operation principle and hardware description*: *Type designation key* on page *27* *Technical data*: *Ratings* on page *326*
Plan the installation: select the cables, etc. Check the ambient conditions, ratings and required cooling air flow.	*Planning the electrical installation* on page *35* *Technical data* on page *325*
Unpack and check the drive.	*Mechanical installation: Unpacking* on page *31*
If the drive will be connected to an IT (ungrounded) or corner-grounded system, check that the internal EMC filter is not connected.	*Operation principle and hardware description*: *Type designation key* on page *27* *Electrical installation*: *Checking the compatibility with IT (ungrounded) and corner-grounded TN systems* on page *46*
Install the drive on a wall or in a cabinet.	*Mechanical installation* on page *29*
Route the cables.	*Planning the electrical installation*: *Routing the cables* on page *39*
Check the insulation of the input cable and the motor and the motor cable.	*Electrical installation*: *Checking the insulation of the assembly* on page *45*
Connect the power cables.	*Electrical installation*: *Connecting the power cables* on page *47*
Connect the control cables.	*Electrical installation*: *Connecting the control cables* on page *49*
Check the installation.	*Installation checklist* on page *55*
Commission the drive.	*Start-up and control with I/O* on page *57*

3

Operation principle and hardware description

What this chapter contains

The chapter briefly describes the operation principle, layout, type designation label and type designation information. It also shows a general diagram of power connections and control interfaces.

Operation principle

The ACS310 is a wall or cabinet mountable drive for controlling AC induction motors.

The figure below shows the simplified main circuit diagram of the drive. The rectifier converts three-phase AC voltage to DC voltage. The capacitor bank of the intermediate circuit stabilizes the DC voltage. The inverter converts the DC voltage back to AC voltage for the AC motor.

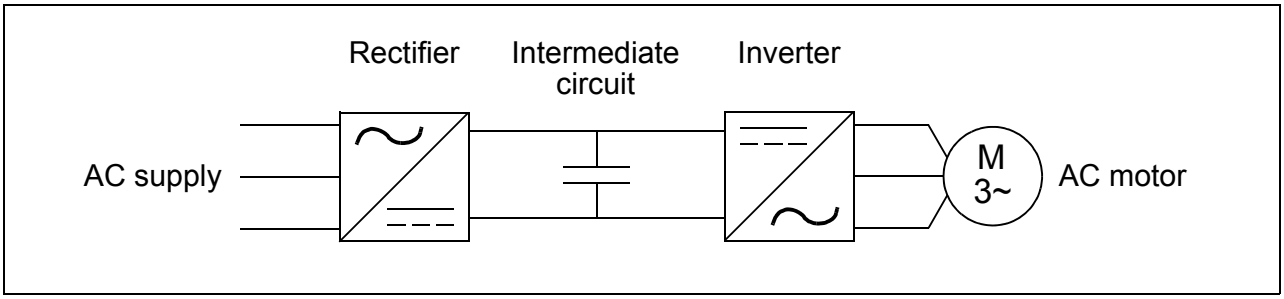

Product overview

Layout

The layout of the drive is presented below. The figure shows a frame size R2 drive. The construction of the different frame sizes R0…R4 varies to some extent.

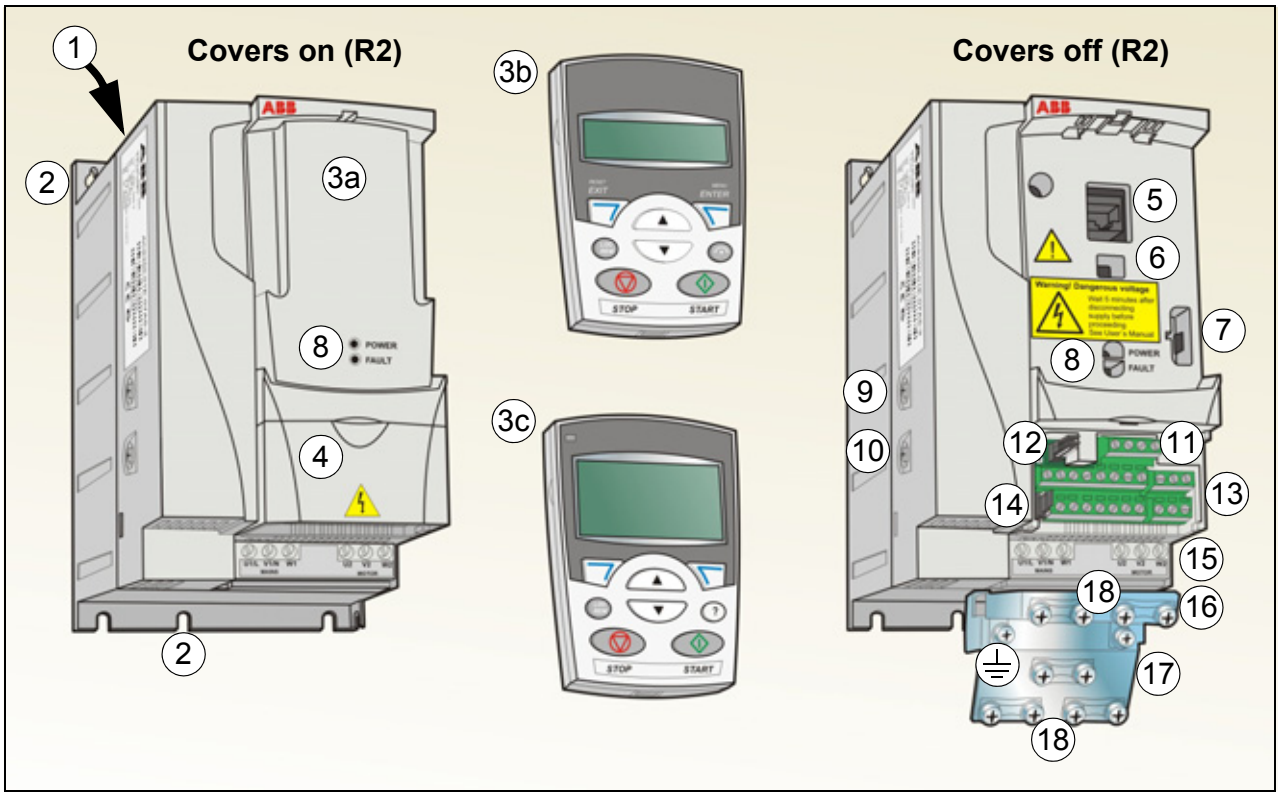

1	Cooling outlet through top cover
2	Mounting holes
3	Panel cover (a) / Basic control panel (b) / Assistant control panel (c)
4	Terminal cover
5	Panel connection
6	Option connection
7	FlashDrop connection
8	Power OK and Fault LEDs. See section *LEDs* on page *323*.

9	EMC filter grounding screw (EMC). **Note:** The screw is on the front in frame size R4.
10	Varistor grounding screw (VAR)
11	EIA-485 connection
12	Jumper J701 for connecting EIA-485 termination resistor
13	I/O connections
14	Switch S1 for selecting voltage or current for analog inputs
15	Input power connection (U1, V1, W1) and motor connection (U2, V2, W2). (Braking chopper connection is disabled.)
16	I/O clamping plate
17	Clamping plate
18	Clamps

Power connections and control interfaces

The diagram gives an overview of connections. I/O connections are parameterable. See chapter *Application macros* on page *101* for I/O connections for the different macros and chapter *Electrical installation* on page *45* for installation in general.

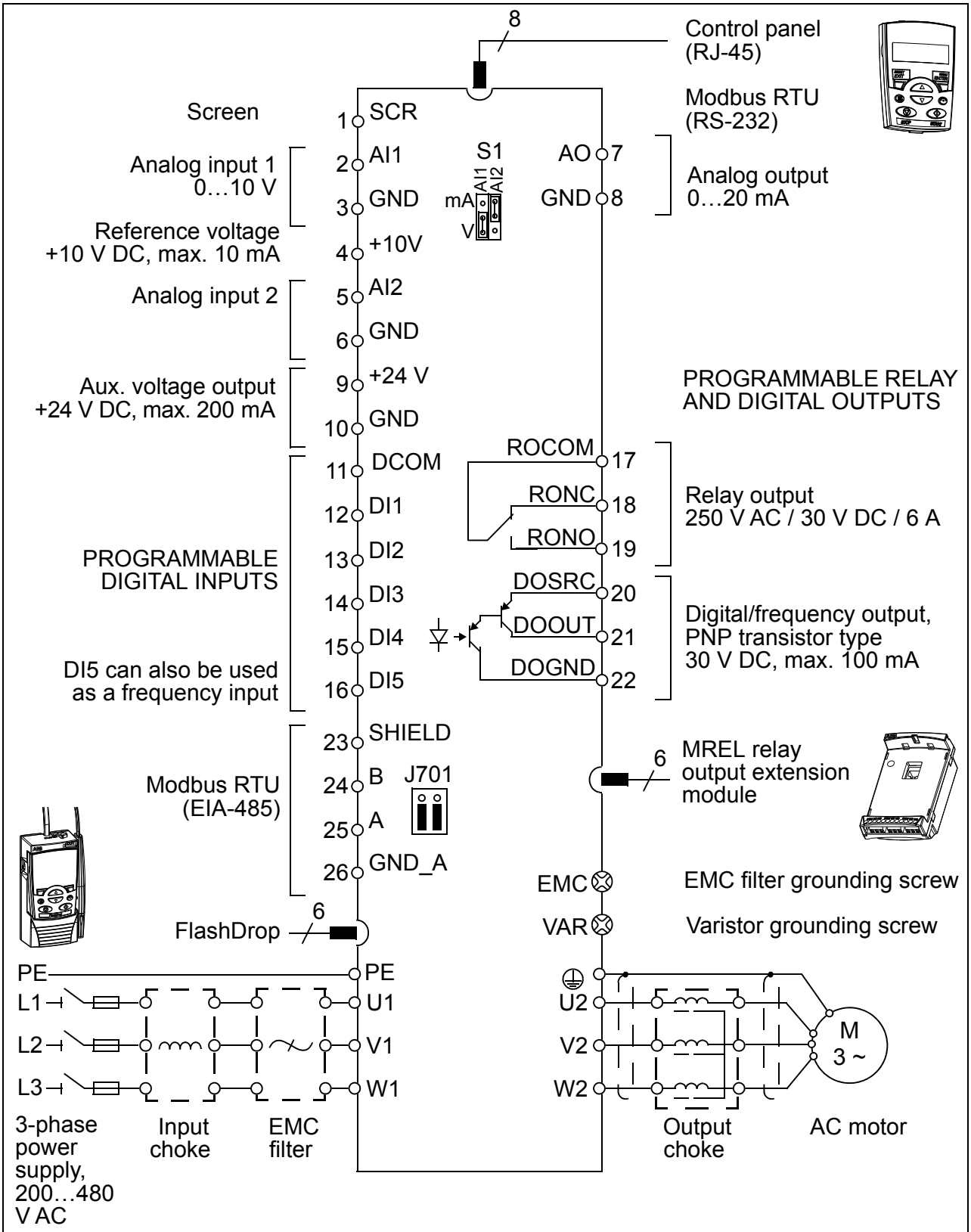

Note: For 1-phase power supply, connect power to U1/L and V1/N terminals.

Type designation label

The type designation label is attached to the left side of the drive. An example label and explanation of the label contents are shown below.

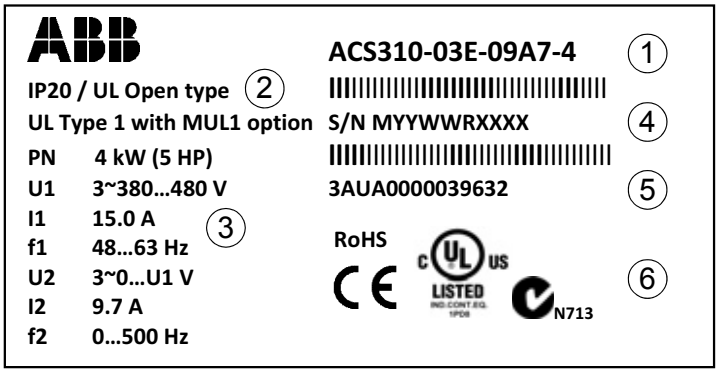

1	Type designation, see section *Type designation key* on page *27*
2	Degree of protection by enclosure (IP and UL/NEMA)
3	Nominal ratings, see section *Ratings* on page *326*.
4	Serial number of format MYYWWRXXXX, where M: Manufacturer YY: 09, 10, 11, … for 2009, 2010, 2011, … WW: 01, 02, 03, … for week 1, week 2, week 3, … R: A, B, C, … for product revision number XXXX: Integer starting every week from 0001
5	ABB MRP code of the drive
6	CE marking and C-Tick, C-UL US and RoHS marks (the label of your drive shows the valid markings)

Type designation key

The type designation contains information on the specifications and configuration of the drive. You find the type designation on the type designation label attached to the drive. The first digits from the left express the basic configuration, for example ACS310-03E-09A7-4. The optional selections are given after that, separated by + signs, for example +J404. The explanations of the type designation label selections are described below.

ACS310-03E-09A7-4+J404+...

ACS310 product series

3-phase
03 = 3-phase input

Configuration
E = EMC filter connected, 50 Hz frequency
U = EMC filter disconnected, 60 Hz frequency

Output current rating
In format xxAy, where xx indicates the integer part and y the fractional part, for example, 09A7 means 9.7 A.
For more information, see section *Ratings* on page *326*.

Input voltage range
2 = 200…240 V AC
4 = 380…480 V AC

Options
J404 = ACS-CP-C Basic control panel [1)]
J400 = ACS-CP-A Assistant control panel [1)]
R700 = ACS310 User's Manual in English (3AUA0000044201 [EN])
R701 = ACS310 User's Manual in German (3AUA0000048396 [DE])
R702 = ACS310 User's Manual in Italian (3AUA0000048398 [IT])
R707 = ACS310 User's Manual in French (3AUA0000048400 [FR])
R708 = ACS310 User's Manual in Spanish (3AUA0000048401 [ES])

[1)] The ACS310 is compatible with panels that have the following panel revisions and panel firmware versions. To find out the revision and firmware version of your panel, see page *68*.

Panel type	Type code	Panel revision	Panel firmware version
Basic control panel	ACS-CP-C	M or later	1.13 or later
Assistant control panel	ACS-CP-A	E or later	2.04 or later
Assistant control panel (Asia)	ACS-CP-D	P or later	2.04 or later

Note that unlike the other panels, the ACS-CP-D is ordered with a separate material code.

4

Mechanical installation

What this chapter contains

The chapter tells how to check the installation site, unpack, check the delivery and install the drive mechanically.

Checking the installation site

The drive may be installed on the wall or in a cabinet. Check the enclosure requirements for the need to use the NEMA 1 option in wall installations (see chapter *Technical data* on page *325*.

The drive can be installed in three different ways, depending on the frame size:

a) back mounting (all frame sizes)

b) side mounting (frame sizes R0…R2)

c) DIN rail mounting (all frame sizes).

The drive must be installed in an upright position.

Check the installation site according to the requirements below. Refer to chapter *Dimension drawings* on page *343* for frame details.

Requirements for the installation site

Operation conditions

See chapter *Technical data* on page *325* for the allowed operation conditions of the drive.

Wall

The wall should be as close to vertical and even as possible, of non-flammable material and strong enough to carry the weight of the drive.

Floor

The floor/material below the installation should be non-flammable.

Free space around the drive

The required free space for cooling above and below the drive is 75 mm (3 in). No free space is required on the sides of the drive, so drives can be mounted immediately next to each other.

Required tools

To install the drive, you need the following tools:

- screwdrivers (as appropriate for the mounting hardware used)
- wire stripper
- tape measure
- drill (if the drive will be installed with screws/bolts)
- mounting hardware: screws or bolts (if the drive will be installed with screws/bolts). For the number of screws/bolts, see *With screws* on page *32*.

Unpacking

The drive (1) is delivered in a package that also contains the following items (frame size R2 shown in the figure):

- plastic bag (2) including clamping plate (also used for I/O cables in frame sizes R3 and R4), I/O clamping plate (for frame sizes R0…R2), clamps and screws
- panel cover (3)
- mounting template, integrated into the package (4)
- short form user's manual (5)
- possible options (Basic control panel, Assistant control panel or complete User's Manual).

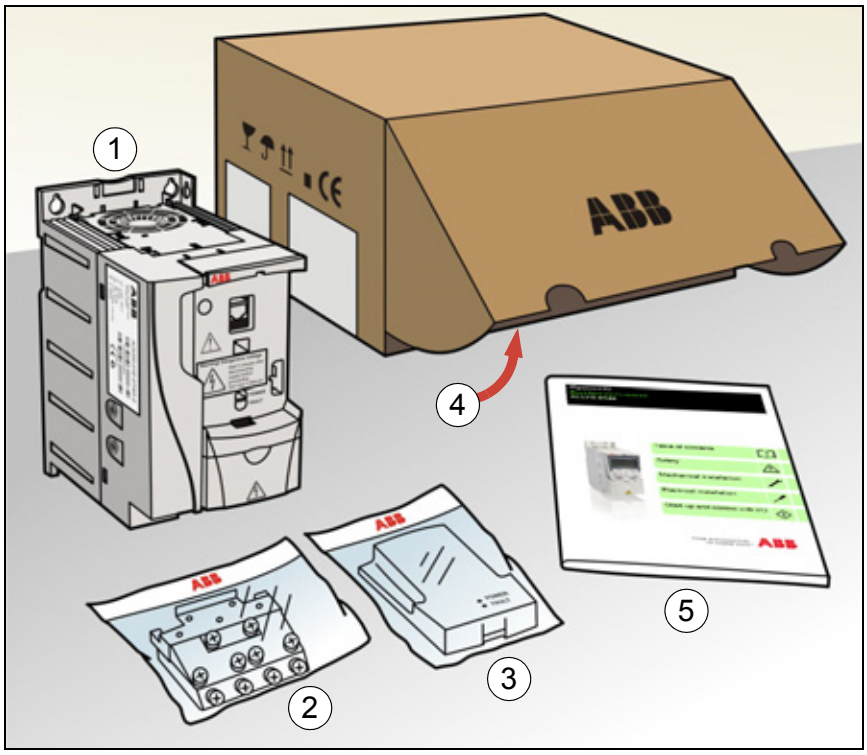

Checking the delivery

Check that there are no signs of damage. Notify the shipper immediately if damaged components are found.

Before attempting installation and operation, check the information on the type designation label of the drive to verify that the drive is of the correct type. See section *Type designation label* on page *26*.

Installing

The instructions in this manual cover drives with the IP20 degree of protection. To comply with NEMA 1, use the MUL1-R1, MUL1-R3 or MUL1-R4 option kit, which is delivered with multilingual installation instructions (3AFE68642868, 3AFE68643147 or 3AUA0000025916, respectively).

Install the drive

Install the drive with screws or on a DIN rail as appropriate.

Note: Make sure that dust from drilling does not enter the drive during the installation.

With screws

1. Mark the hole locations using for example the mounting template cut out from the package. The locations of the holes are also shown in the drawings in chapter *Dimension drawings* on page *343*. The number and location of the holes used depend on how the drive is installed:
   a) back mounting (frame sizes R0…R4): four holes
   b) side mounting (frame sizes R0…R2): three holes; one of the bottom holes is located in the clamping plate.
2. Fix the screws or bolts to the marked locations.

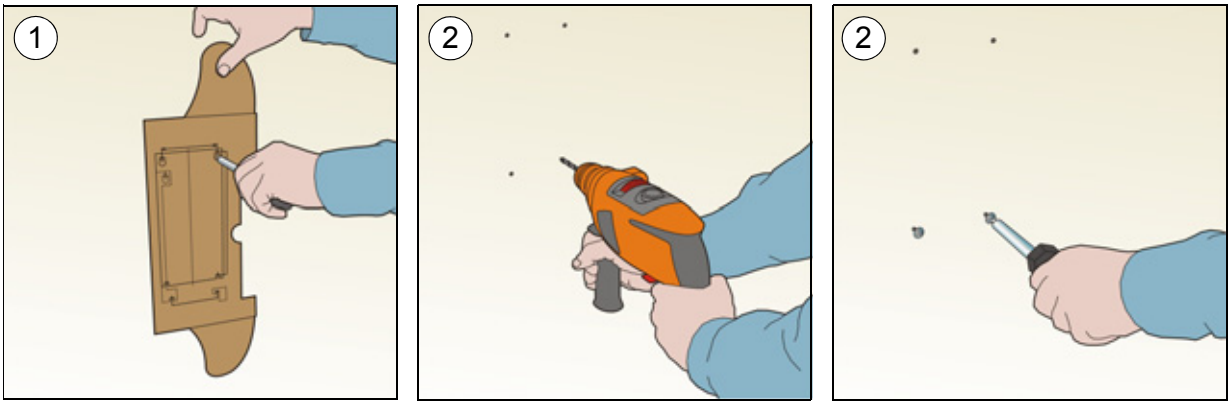

3. Position the drive onto the screws on the wall.
4. Tighten the screws in the wall securely.

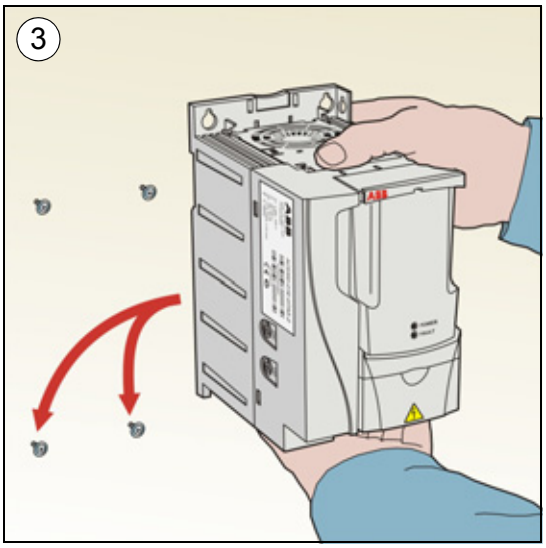

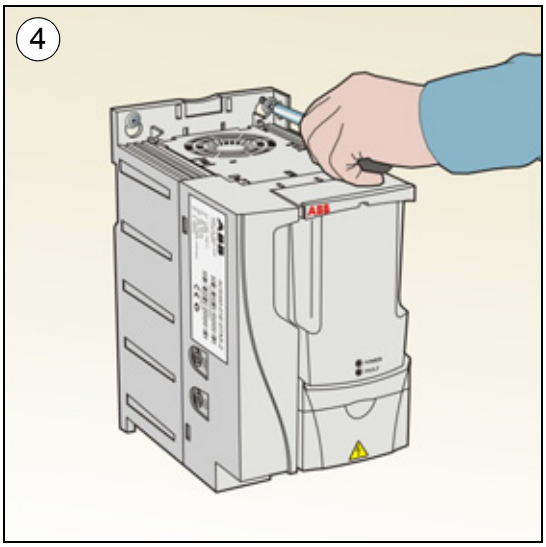

On DIN rail

1. Click the drive to the rail.
   To detach the drive, press the release lever on top of the drive (1b).

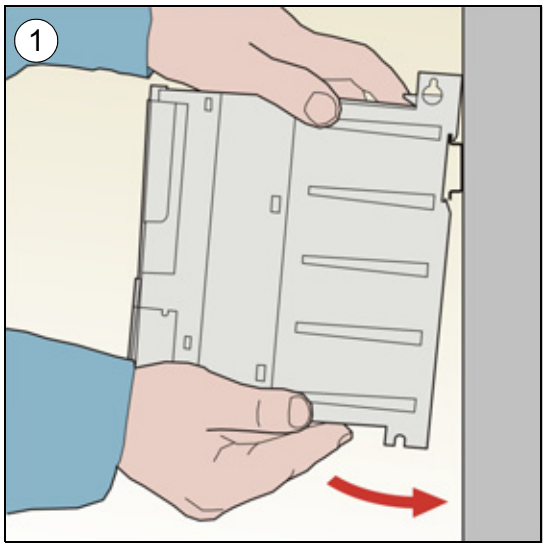

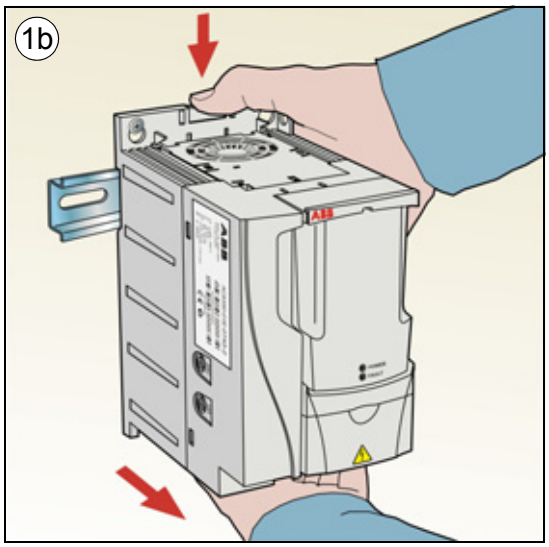

Fasten clamping plates

1. Fasten the clamping plate to the plate at the bottom of the drive with the provided screws.
2. For frame sizes R0…R2, fasten the I/O clamping plate to the clamping plate with the provided screws.

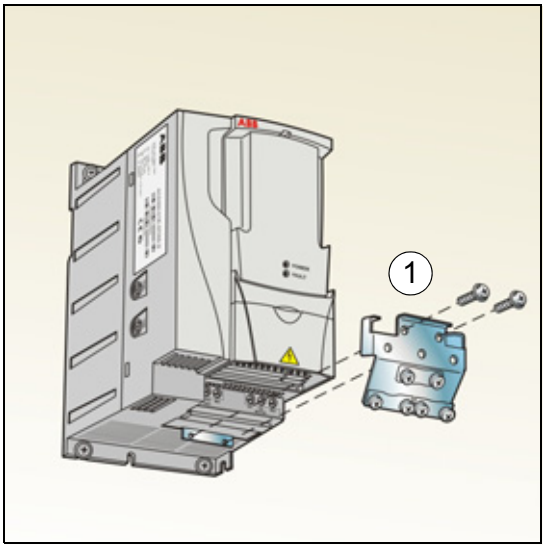

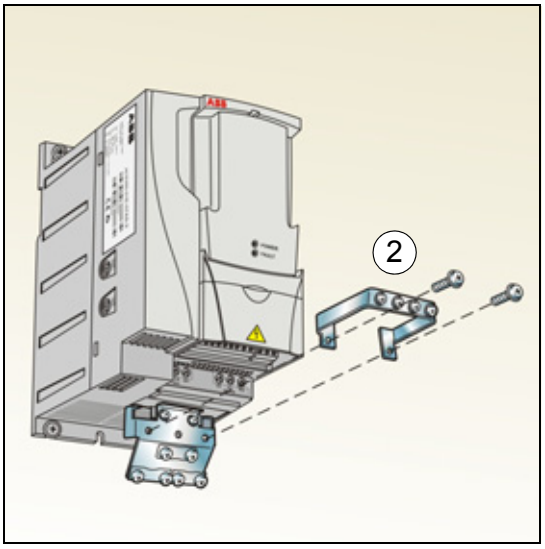

5

Planning the electrical installation

What this chapter contains

The chapter contains the instructions that you must follow when checking the compatibility of the motor and drive, and selecting cables, protections, cable routing and way of operation for the drive.

Note: The installation must always be designed and made according to applicable local laws and regulations. ABB does not assume any liability whatsoever for any installation which breaches the local laws and/or other regulations. Furthermore, if the recommendations given by ABB are not followed, the drive may experience problems that the warranty does not cover.

Implementing the AC power line connection

See the requirements in section *Electric power network specification* on page *334*. Use a fixed connection to the AC power line.

WARNING! As the leakage current of the device typically exceeds 3.5 mA, a fixed installation is required according to IEC 61800-5-1.

Selecting the supply disconnecting device (disconnecting means)

Install a hand-operated supply disconnecting device (disconnecting means) between the AC power source and the drive. The disconnecting device must be of a type that can be locked to the open position for installation and maintenance work.

European union

To meet the European Union Directives, according to standard EN 60204-1, Safety of Machinery, the disconnecting device must be one of the following types:

- a switch-disconnector of utilization category AC-23B (EN 60947-3)
- a disconnector having an auxiliary contact that in all cases causes switching devices to break the load circuit before the opening of the main contacts of the disconnector (EN 60947-3)
- a circuit breaker suitable for isolation in accordance with EN 60947-2.

Other regions

The disconnecting device must conform to the applicable safety regulations.

Checking the compatibility of the motor and drive

Check that the 3-phase AC induction motor and the drive are compatible according to the rating table in section *Ratings* on page *326*. The table lists the typical motor power for each drive type.

Selecting the power cables

General rules

Dimension the input power and motor cables **according to local regulations**.

- The input power and the motor cables must be able to carry the corresponding load currents. See section *Ratings* on page *326* for the rated currents.
- The cable must be rated for at least 70 °C maximum permissible temperature of the conductor in continuous use. For US, see section *Additional US requirements* on page *38*.
- The conductivity of the PE conductor must be equal to that of the phase conductor (same cross-sectional area).
- 600 V AC cable is accepted for up to 500 V AC.
- Refer to chapter *Technical data* on page *325* for the EMC requirements.

A symmetrical shielded motor cable (see the following figure) must be used to meet the EMC requirements of the CE and C-Tick marks.

A four-conductor system is allowed for input cabling, but a shielded symmetrical cable is recommended.

Compared to a four-conductor system, the use of a symmetrical shielded cable reduces electromagnetic emission of the whole drive system as well as motor bearing currents and wear.

Alternative power cable types

Power cable types that can be used with the drive are presented below.

Motor cables

(recommended for input cables also)

Symmetrical shielded cable: three phase conductors, a concentric or otherwise symmetrically constructed PE conductor and a shield

Note: A separate PE conductor is required if the conductivity of the cable shield is not sufficient for the purpose.

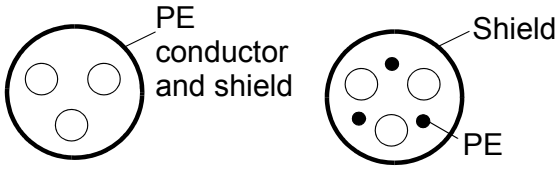

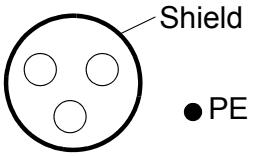

Allowed as input cables

A four-conductor system: three phase conductors and a protective conductor

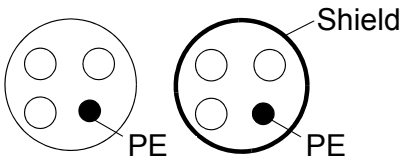

Motor cable shield

To function as a protective conductor, the shield must have the same cross-sectional area as the phase conductors when they are made of the same metal.

To effectively suppress radiated and conducted radio-frequency emissions, the shield conductivity must be at least 1/10 of the phase conductor conductivity. The requirements are easily met with a copper or aluminium shield. The minimum requirement of the motor cable shield of the drive is shown below. It consists of a concentric layer of copper wires. The better and tighter the shield, the lower the emission level and bearing currents.

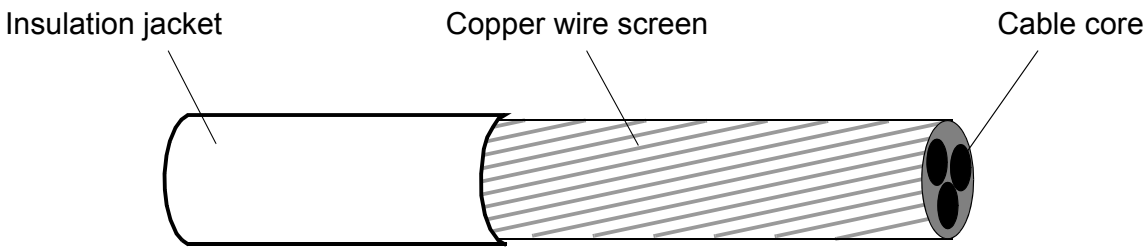

Additional US requirements

Type MC continuous corrugated aluminium armor cable with symmetrical grounds or shielded power cable is recommended for the motor cables if metallic conduit is not used.

The power cables must be rated for 75 °C (167 °F).

Conduit

Where conduits must be coupled together, bridge the joint with a ground conductor bonded to the conduit on each side of the joint. Bond the conduits also to the drive enclosure. Use separate conduits for input power, motor and control wiring. Do not run motor wiring from more than one drive in the same conduit.

Armored cable / shielded power cable

Six-conductor (three phases and three ground) type MC continuous corrugated aluminium armor cable with symmetrical grounds is available from the following suppliers (trade names in parentheses):

- Anixter Wire & Cable (Philsheath)
- BICC General Corp (Philsheath)
- Rockbestos Co. (Gardex)
- Oaknite (CLX).

Shielded power cable is available from the following suppliers:

- Belden
- LAPPKABEL (ÖLFLEX)
- Pirelli.

Selecting the control cables

General rules

All analog control cables and the cable used for the frequency input must be shielded.

Use a double-shielded twisted pair cable (Figure a, for example, JAMAK by Draka NK Cables) for analog signals. Employ one individually shielded pair for each signal. Do not use common return for different analog signals.

A double-shielded cable is the best alternative for low-voltage digital signals, but a single-shielded or unshielded twisted multipair cable (Figure b) is also usable. However, for frequency input, always use a shielded cable.

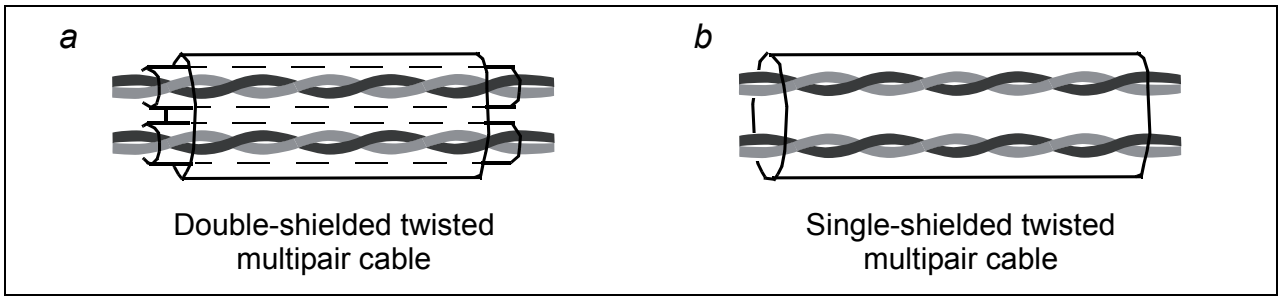

Run analog and digital signals in separate cables.

Relay-controlled signals, providing their voltage does not exceed 48 V, can be run in the same cables as digital input signals. It is recommended that the relay-controlled signals are run as twisted pairs.

Never mix 24 V DC and 115/230 V AC signals in the same cable.

Relay cable

The cable type with braided metallic screen (for example, ÖLFLEX by LAPPKABEL) has been tested and approved by ABB.

Control panel cable

In remote use, the cable connecting the control panel to the drive must not exceed 3 m (10 ft). The cable type tested and approved by ABB is used in control panel option kits.

Routing the cables

Route the motor cable away from other cable routes. Motor cables of several drives can be run in parallel installed next to each other. It is recommended that the motor cable, input power cable and control cables are installed on separate trays. Avoid long parallel runs of motor cables with other cables to decrease electromagnetic interference caused by the rapid changes in the drive output voltage.

Where control cables must cross power cables make sure that they are arranged at an angle as near to 90 degrees as possible.

The cable trays must have good electrical bonding to each other and to the grounding electrodes. Aluminium tray systems can be used to improve local equalizing of potential.

A diagram of the cable routing is shown below.

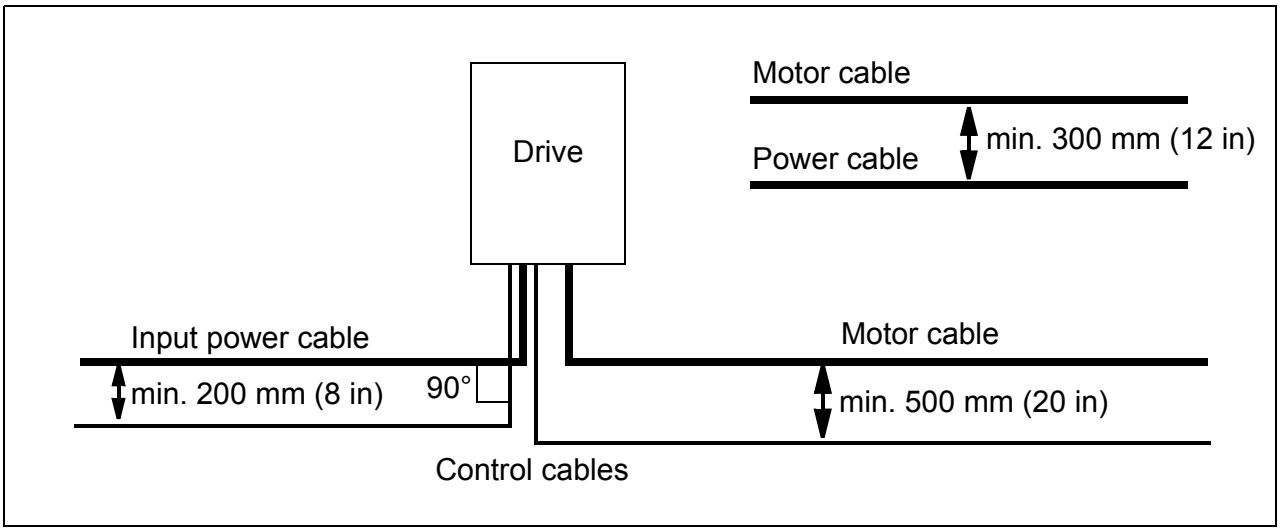

Control cable ducts

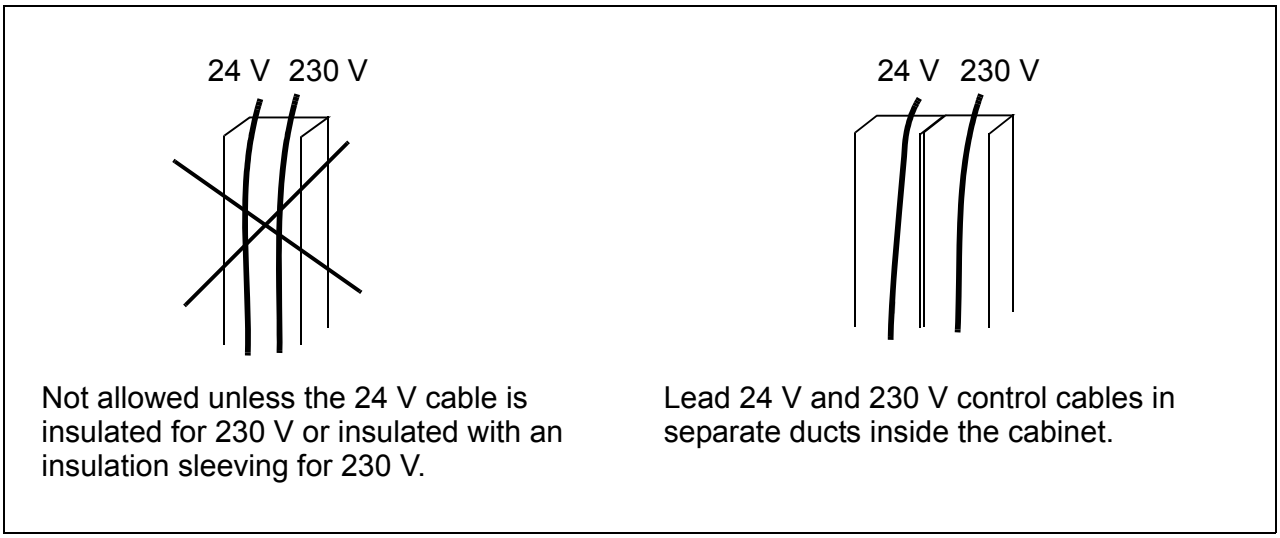

Not allowed unless the 24 V cable is insulated for 230 V or insulated with an insulation sleeving for 230 V.

Lead 24 V and 230 V control cables in separate ducts inside the cabinet.

Protecting the drive, input power cable, motor and motor cable in short-circuit situations and against thermal overload

Protecting the drive and input power cable in short-circuit situations

Arrange the protection according to the following guidelines.

Circuit diagram	Short-circuit protection
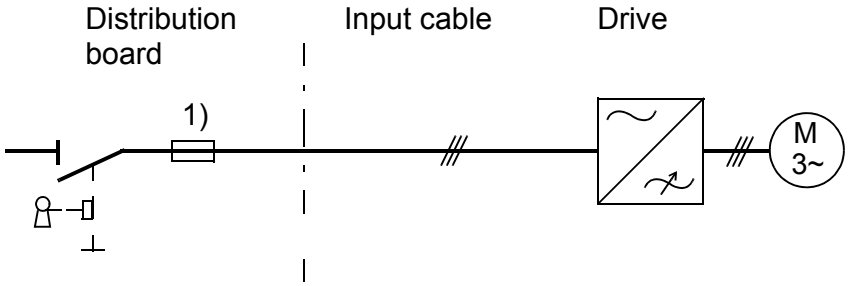	Protect the drive and input cable with fuses. See footnote 1).

1) Size the fuses according to instructions given in chapter *Technical data* on page *325*. The fuses protect the input cable in short-circuit situations, restrict drive damage and prevent damage to adjoining equipment in case of a short circuit inside the drive.

Protecting the motor and motor cable in short-circuit situations

The drive protects the motor and motor cable in a short-circuit situation when the motor cable is dimensioned according to the nominal current of the drive. No additional protection devices are needed.

Protecting the drive, motor cable and input power cable against thermal overload

The drive protects itself and the input and motor cables against thermal overload when the cables are dimensioned according to the nominal current of the drive. No additional thermal protection devices are needed.

WARNING! If the drive is connected to multiple motors, a separate thermal overload switch must be used for protecting each cable and motor. These devices may require a separate fuse to cut off the short-circuit current.

Protecting the motor against thermal overload

According to regulations, the motor must be protected against thermal overload and the current must be switched off when overload is detected. The drive includes a motor thermal protection function that protects the motor and switches off the current when necessary. It is also possible to connect a motor temperature measurement to the drive. The user can tune both the thermal model and the temperature measurement function further by parameters.

The most common temperature sensors are:

- motor sizes IEC180…225: thermal switch (for example Klixon)
- motor sizes IEC200…250 and larger: PTC or Pt100.

For more information on the thermal model, see section *Motor thermal protection* on page *132*. For more information on the temperature measurement function, see section *Motor temperature measurement through the standard I/O* on page *142*.

Using residual current devices (RCD) with the drive

ACS310-03x drives are suitable to be used with residual current devices of Type B. Other measures for protection in case of direct or indirect contact, such as separation from the environment by double or reinforced insulation or isolation from the supply system by a transformer, can also be applied.

Implementing a bypass connection

WARNING! Never connect the supply power to the drive output terminals U2, V2 and W2. Power line voltage applied to the output can result in permanent damage to the drive.

If frequent bypassing is required, employ mechanically connected switches or contactors to ensure that the motor terminals are not connected to the AC power line and drive output terminals simultaneously.

Protecting the contacts of relay outputs

Inductive loads (relays, contactors, motors) cause voltage transients when switched off.

Equip inductive loads with noise attenuating circuits (varistors, RC filters [AC] or diodes [DC]) in order to minimize the EMC emission at switch-off. If not suppressed, the disturbances may connect capacitively or inductively to other conductors in the control cable and form a risk of malfunction in other parts of the system.

Install the protective component as close to the inductive load as possible. Do not install protective components at the I/O terminal block.

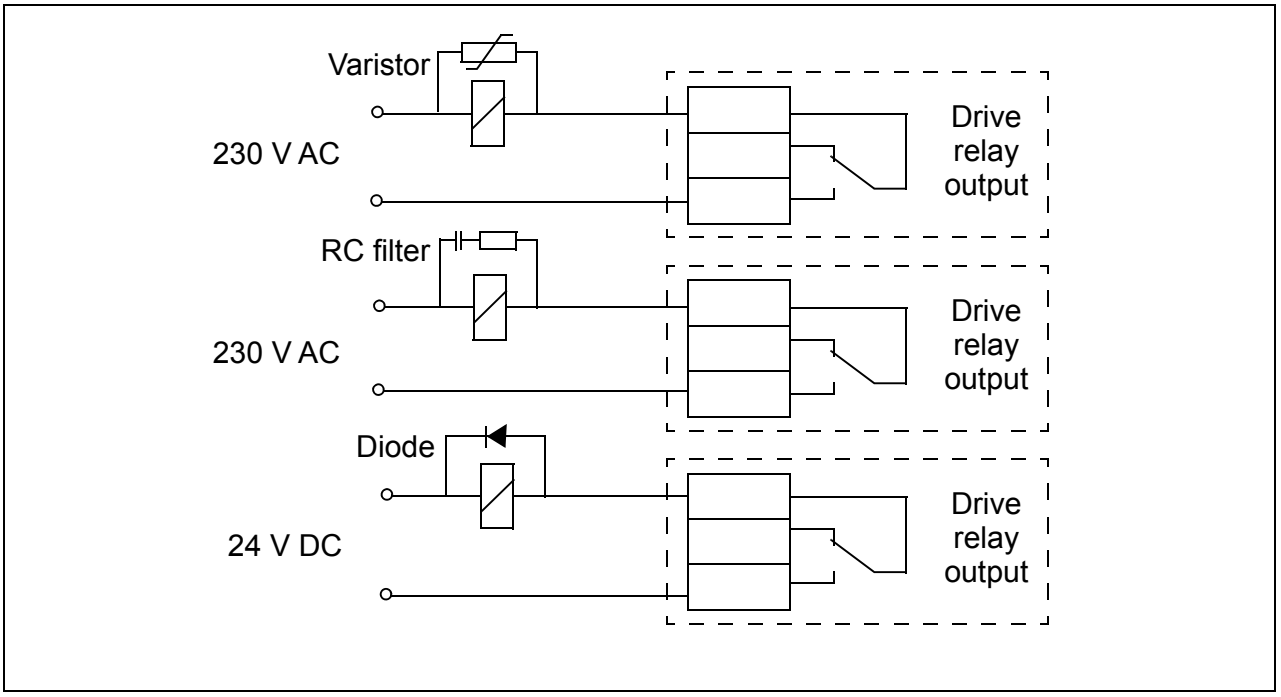

6

Electrical installation

What this chapter contains

The chapter tells how to check the insulation of the assembly and the compatibility with IT (ungrounded) and corner-grounded TN systems as well as connect power cables, control cables and embedded fieldbus.

WARNING! The work described in this chapter may only be carried out by a qualified electrician. Follow the instructions in chapter *Safety* on page *15*. Ignoring the safety instructions can cause injury or death.

Make sure that the drive is disconnected from the input power during installation. If the drive is already connected to the input power, wait for 5 minutes after disconnecting the input power.

Checking the insulation of the assembly

Drive

Do not make any voltage tolerance or insulation resistance tests (for example, hi-pot or megger) on any part of the drive as testing can damage the drive. Every drive has been tested for insulation between the main circuit and the chassis at the factory. Also, there are voltage-limiting circuits inside the drive which cut down the testing voltage automatically.

Input power cable

Check the insulation of the input power cable according to local regulations before connecting to the drive.

Motor and motor cable

Check the insulation of the motor and motor cable as follows:

1. Check that the motor cable is connected to the motor and disconnected from the drive output terminals U2, V2 and W2.
2. Measure the insulation resistance between each phase conductor and the Protective Earth conductor using a measuring voltage of 500 V DC. The insulation resistance of an ABB motor must exceed 100 Mohm (reference value at 25 °C or 77 °F). For the insulation resistance of other motors, please consult the manufacturer's instructions.
   Note: Moisture inside the motor casing reduces the insulation resistance. If moisture is suspected, dry the motor and repeat the measurement.

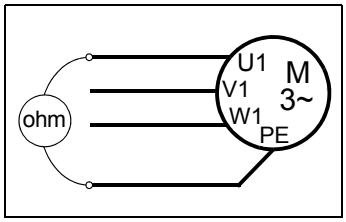

Checking the compatibility with IT (ungrounded) and corner-grounded TN systems

WARNING! Disconnect the internal EMC filter when installing the drive on an IT system (an ungrounded power system or a high-resistance-grounded [over 30 ohms] power system), otherwise the system is connected to ground potential through the EMC filter capacitors. This may cause danger or damage the drive.

Disconnect the internal EMC filter when installing the drive on a corner-grounded TN system, otherwise the drive will be damaged.

Note: When the internal EMC filter is disconnected, the drive is not EMC compatible.

1. If you have an IT (ungrounded) or corner-grounded TN system, disconnect the internal EMC filter by removing the EMC screw. For 3-phase U-type drives (with type designation ACS310-03U-), the EMC screw is already removed at the factory and replaced by a plastic one.

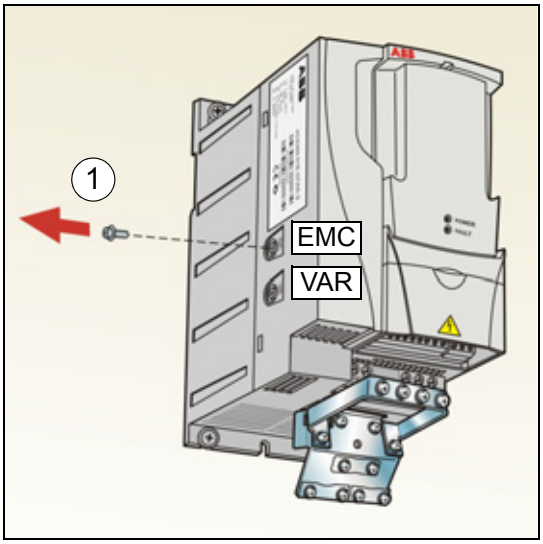

Note: In frame size R4 the EMC screw is located to the right of terminal W2.

Connecting the power cables

Connection diagram

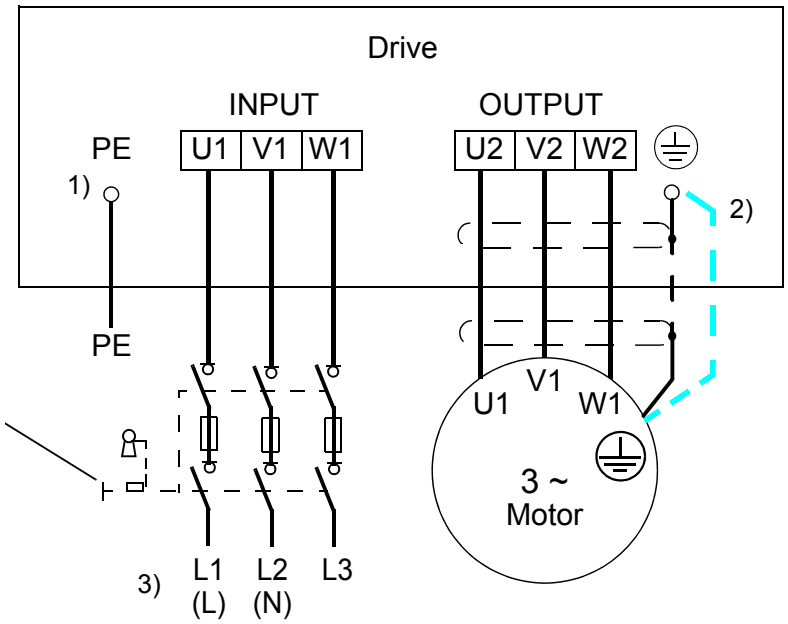

For alternatives, see section *Selecting the supply disconnecting device (disconnecting means)* on page *35*.

1) Ground the other end of the PE conductor at the distribution board.

2) Use a separate grounding cable if the conductivity of the cable shield is insufficient (smaller than the conductivity of the phase conductor) and there is no symmetrically constructed grounding conductor in the cable. See section *Selecting the power cables* on page *36*.

3) L and N are connection markings for 1-phase supply.

Note:

Do not use an asymmetrically constructed motor cable.

If there is a symmetrically constructed grounding conductor in the motor cable in addition to the conductive shield, connect the grounding conductor to the grounding terminal at the drive and motor ends.

For the 1-phase supply, connect power to U1 (L) and V1 (N) terminals.

Route the motor cable, input power cable and control cables separately. For more information, see section *Routing the cables* on page *39*.

Grounding of the motor cable shield at the motor end

For minimum radio frequency interference:

- ground the cable by twisting the shield as follows: flattened width ≥ 1/5 · length
- or ground the cable shield 360 degrees at the lead-through of the motor terminal box.

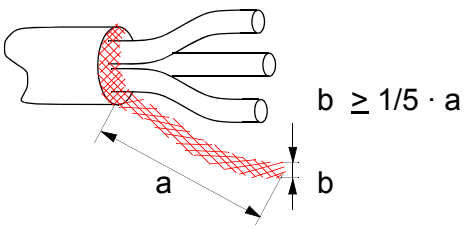

Connection procedure

1. Fasten the grounding conductor (PE) of the input power cable under the grounding clamp. Connect the phase conductors to the U1, V1 and W1 terminals. Use a tightening torque of 0.8 N·m (7 lbf·in) for frame sizes R0…R2, 1.7 N·m (15 lbf·in) for R3, and 2.5 N·m (22 lbf·in) for R4.
2. Strip the motor cable and twist the shield to form as short a pigtail as possible. Fasten the twisted shield under the grounding clamp. Connect the phase conductors to the U2, V2 and W2 terminals. Use a tightening torque of 0.8 N·m (7 lbf·in) for frame sizes R0…R2, 1.7 N·m (15 lbf·in) for R3, and 2.5 N·m (22 lbf·in) for R4.
3. Secure the cables outside the drive mechanically.

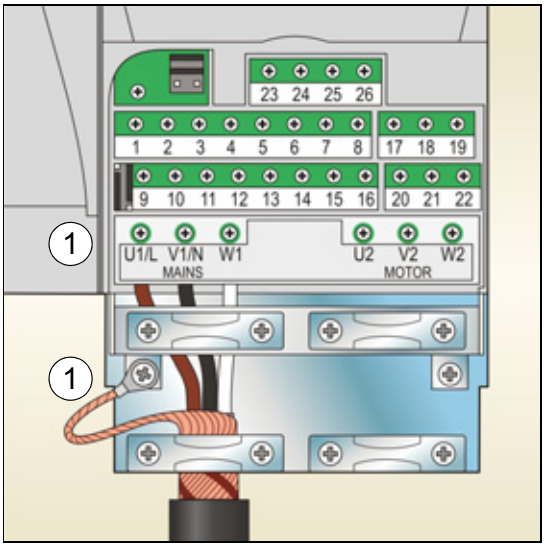

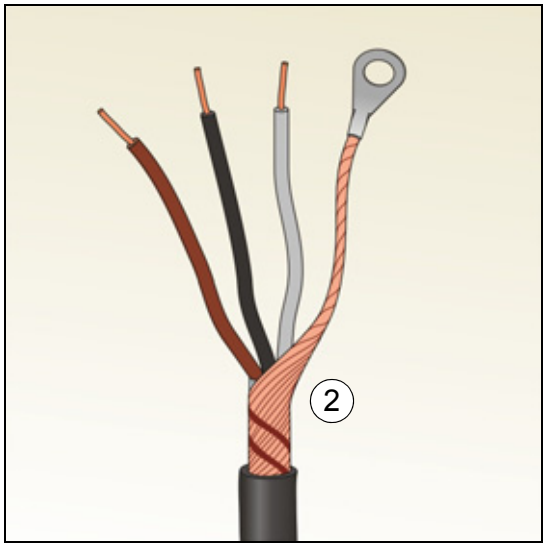

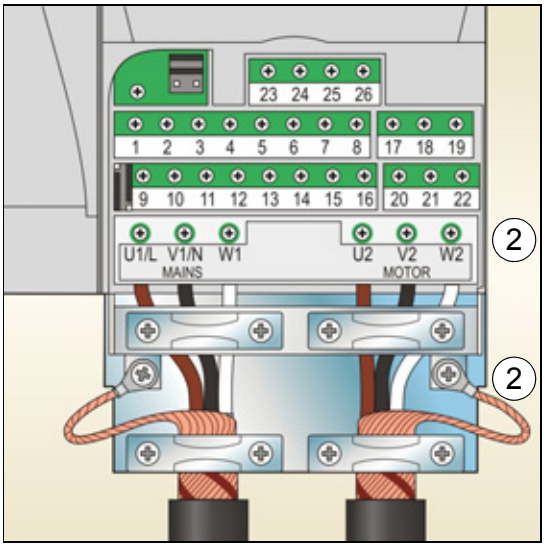

Connecting the control cables

I/O terminals

The figure below shows the I/O terminals. Tightening torque is 0.4 N·m (3.5 lbf·in).

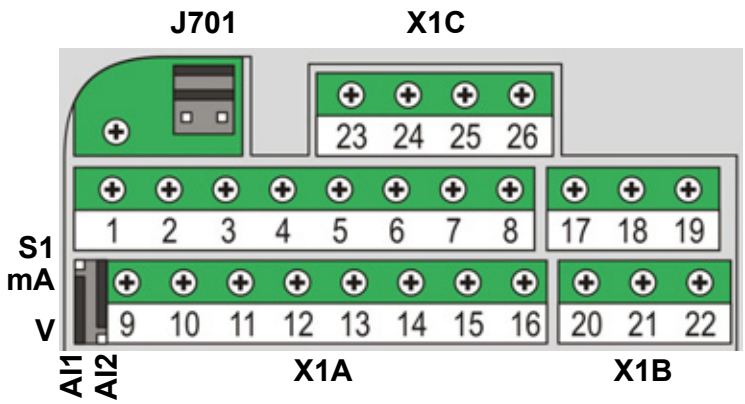

J701: Connects 120 ohm termination resistor. See page *54*.

S1: Selects voltage or current as the signal types for analog inputs AI1 and AI2.

X1A:
1: SCR
2: AI1
3: GND
4: +10 V
5: AI2
6: GND
7: AO
8: GND
9: +24 V
10: GND
11: DCOM
12: DI1
13: DI2
14: DI3
15: DI4
16: DI5 digital or frequency input

X1B:
17: ROCOM
18: RONC
19: RONO
20: DOSRC
21: DOOUT
22: DOGND

X1C:
23: SCR
24: B
25: A
26: GND_A

WARNING! All ELV (Extra Low Voltage) circuits connected to the drive must be used within a zone of equipotential bonding, i.e. within a zone where all simultaneously accessible conductive parts are electrically connected to prevent hazardous voltages appearing between them. This is accomplished by a proper factory grounding.

The terminals on the control board as well as on the optional modules attachable to the board fulfil the Protective Extra Low Voltage (PELV) requirements stated in EN 50178, provided that the external circuits connected to the terminals also fulfil the requirements and the installation site is below 2000 m (6562 ft).

Voltage and current selection for analog inputs

Switch S1 selects voltage (0 [2]…10 V / -10…10 V) or current (0 [4]…20 mA / -20…20 mA) as the signal types for analog inputs AI1 and AI2. The factory settings are unipolar voltage for AI1 (0 [2]…10 V) and unipolar current for AI2 (0 [4]…20 mA), which correspond to the default usage in the application macros. The switch is located to the left of I/O terminal 9 (see the I/O terminal figure above).

S1

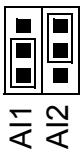

Top position: I (0 [4]…20 mA, default for AI2; or -20…20 mA)
Bottom position: U (0 [2]…10 V, default for AI1; or -10…10 V)

Voltage and current connection for analog inputs

Bipolar voltage (-10…10 V) and current (-20…20 mA) are also possible. If a bipolar connection is used instead of a unipolar one, see section *Programmable analog inputs* on page *122* for how to set parameters accordingly.

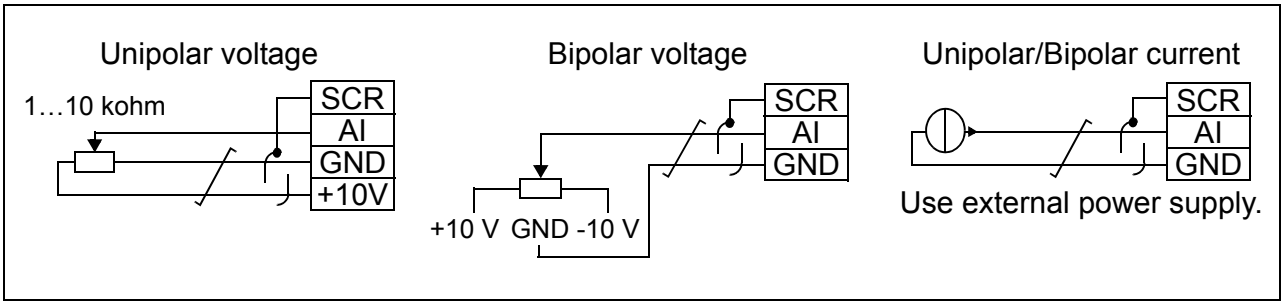

PNP and NPN configuration for digital inputs

You can wire the digital input terminals in either a PNP or NPN configuration.

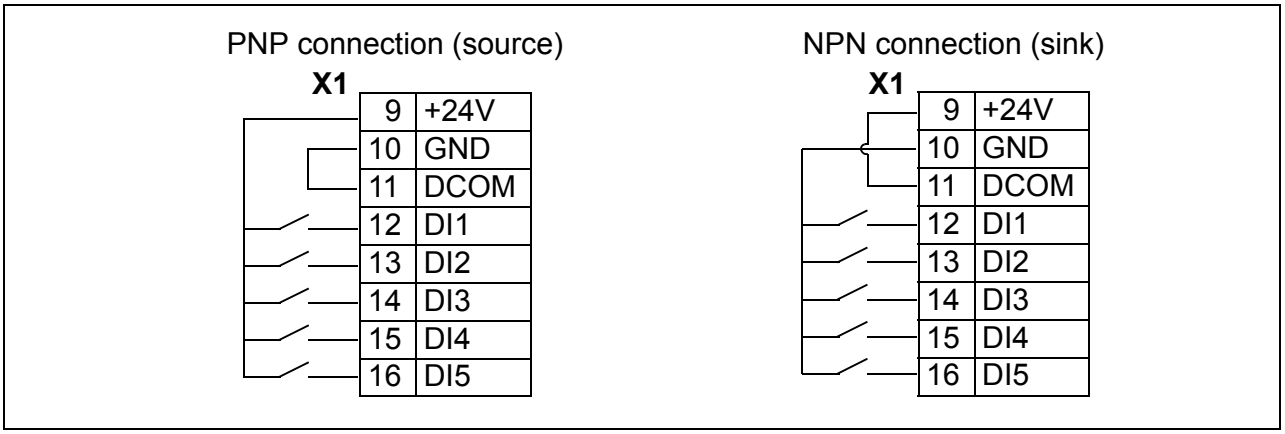

External power supply for digital inputs

For using an external +24 V supply for the digital inputs, see the figure below.

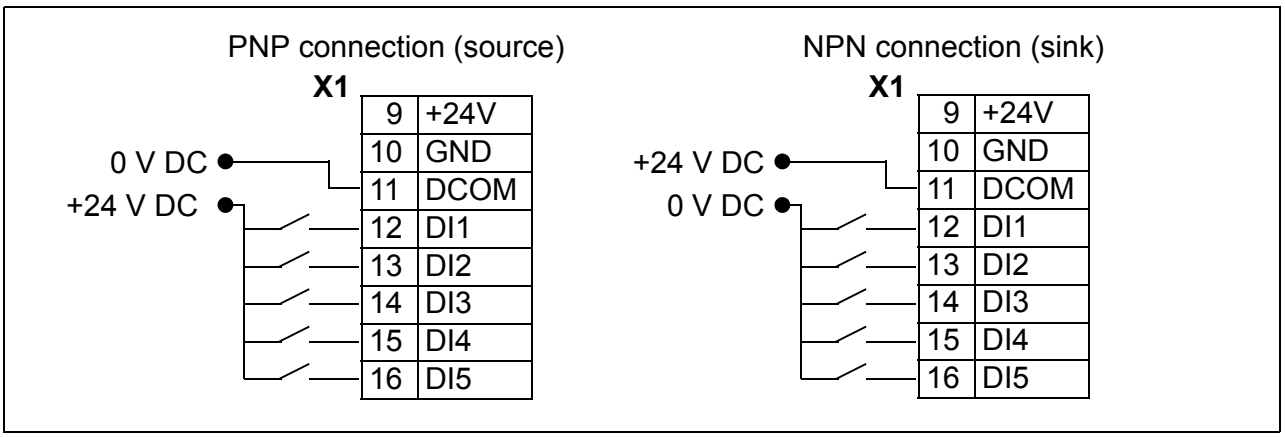

Frequency input

If DI5 is used as a frequency input, see section *Frequency input* on page *125* for how to set parameters accordingly.

Connection examples of two-wire and three-wire sensors

Hand/Auto, PID control, PFC control and SPFC control macros (see section *Application macros* on page *101*) use analog input 2 (AI2). The macro wiring diagrams on these pages use an externally powered sensor (connections not shown). The figures below gives example of a connections using a two-wire or three-wire sensor/transmitter supplied by the drive auxiliary voltage output.

Note: Maximum capability of the auxiliary 24 V (200 mA) output must not be exceeded.

Two-wire sensor/transmitter

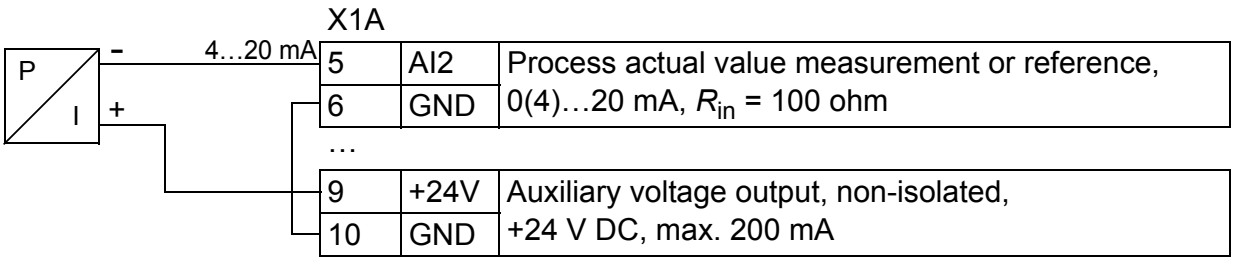

Note: The sensor is supplied through its current output and the drive feeds the supply voltage (+24 V). Thus the output signal must be 4…20 mA, not 0…20 mA.

Three-wire sensor/transmitter

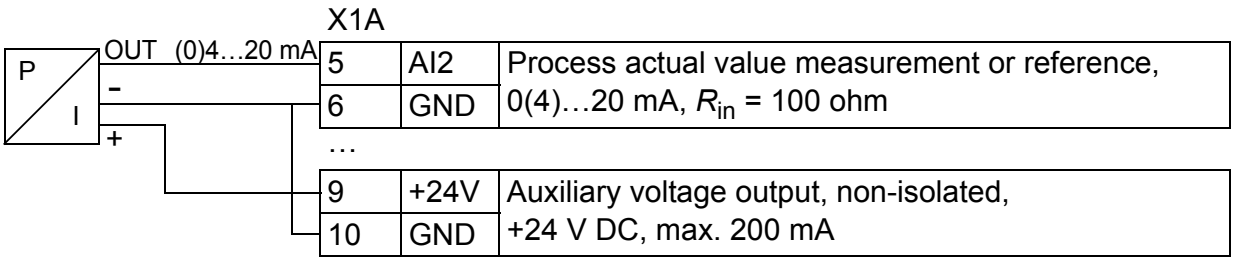

Default I/O connection diagram

The default connection of the control signals depends on the application macro in use, which is selected with parameter *9902 APPLIC MACRO*.

The default macro is the ABB standard macro. It provides a general purpose I/O configuration with three constant speeds. Parameter values are the default values given in section *Default values with different macros* on page *161*. For information on other macros, see chapter *Application macros* on page *101*.

The default I/O connections for the ABB standard macro are given in the figure below.

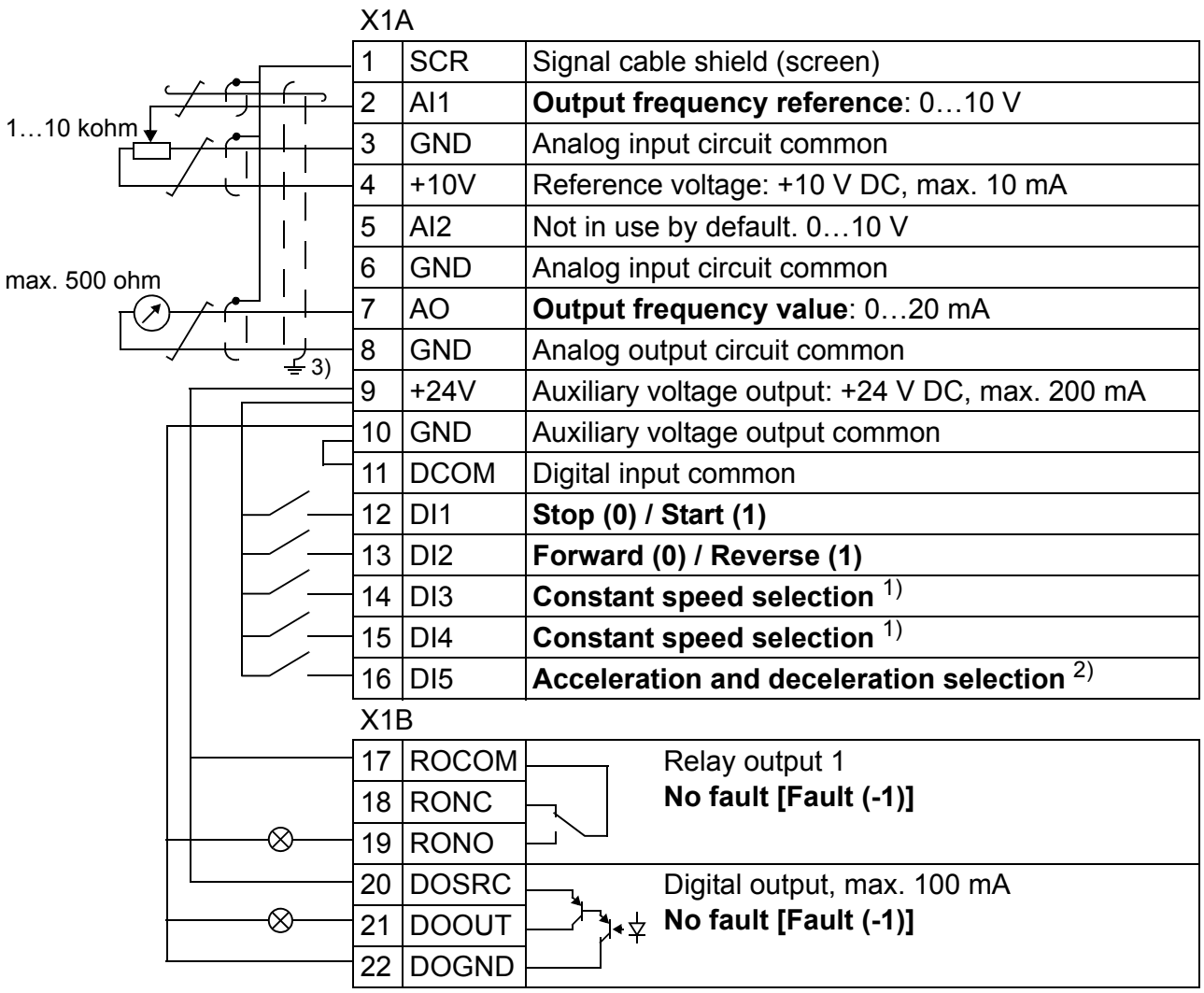

1	SCR	Signal cable shield (screen)
2	AI1	**Output frequency reference**: 0…10 V
3	GND	Analog input circuit common
4	+10V	Reference voltage: +10 V DC, max. 10 mA
5	AI2	Not in use by default. 0…10 V
6	GND	Analog input circuit common
7	AO	**Output frequency value**: 0…20 mA
8	GND	Analog output circuit common
9	+24V	Auxiliary voltage output: +24 V DC, max. 200 mA
10	GND	Auxiliary voltage output common
11	DCOM	Digital input common
12	DI1	**Stop (0) / Start (1)**
13	DI2	**Forward (0) / Reverse (1)**
14	DI3	**Constant speed selection** [1]
15	DI4	**Constant speed selection** [1]
16	DI5	**Acceleration and deceleration selection** [2]

17	ROCOM	Relay output 1 **No fault [Fault (-1)]**
18	RONC	
19	RONO	
20	DOSRC	Digital output, max. 100 mA **No fault [Fault (-1)]**
21	DOOUT	
22	DOGND	

[1] See parameter group *12 CONSTANT SPEEDS*:

DI3	DI4	Operation (parameter)
0	0	Set speed through AI1
1	0	Speed 1 (*1202 CONST SPEED 1*)
0	1	Speed 2 (*1203 CONST SPEED 2*)
1	1	Speed 3 (*1204 CONST SPEED 3*)

[2] 0 = ramp times according to parameters *2202* and *2203*.
1 = ramp times according to parameters *2205* and *2206*.

[3] 360 degree grounding under a clamp.

Tightening torque: 0.4 N·m (3.5 lbf·in).

Connection procedure

1. Remove the terminal cover by simultaneously pushing the recess and sliding the cover off the frame.
2. *Digital signals*: Strip the outer insulation of the digital signal cable 360 degrees and ground the bare shield under the clamp.
3. Connect the conductors of the cable to the appropriate terminals. Use a tightening torque of 0.4 N·m (3.5 lbf·in).
4. For double-shielded cables, twist also the grounding conductors of each pair in the cable together and connect the bundle to the SCR terminal (terminal 1).

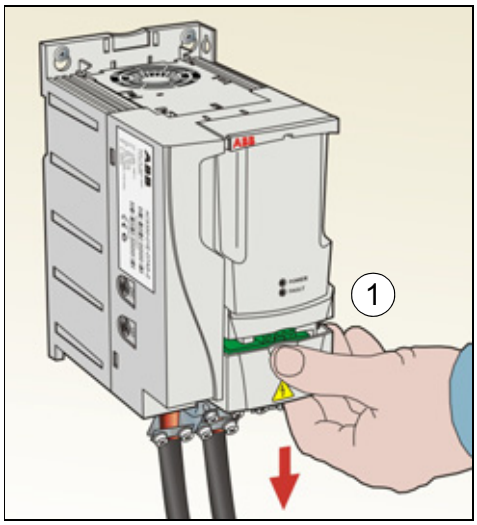

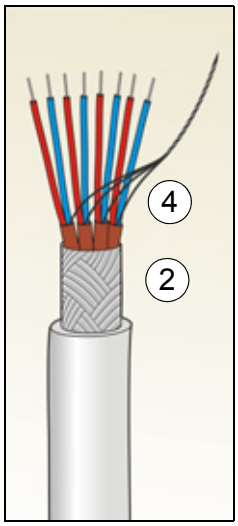

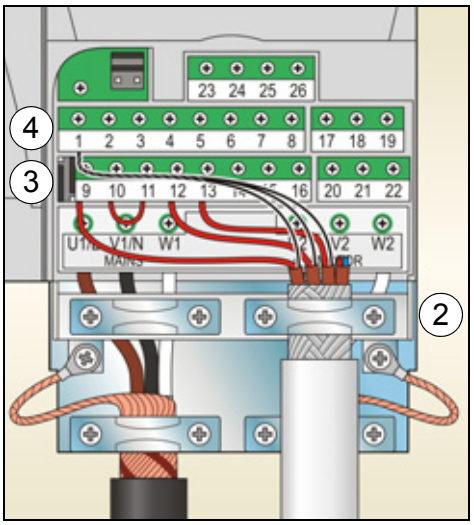

5. *Analog signals*: Strip the outer insulation of the analog signal cable 360 degrees and ground the bare shield under the clamp.
6. Connect the conductors to the appropriate terminals. Use a tightening torque of 0.4 N·m (3.5 lbf·in).
7. Twist the grounding conductors of each pair in the analog signal cable together and connect the bundle to the SCR terminal (terminal 1).
8. Secure the connected cables outside the drive mechanically.
9. Slide the terminal cover back in place.

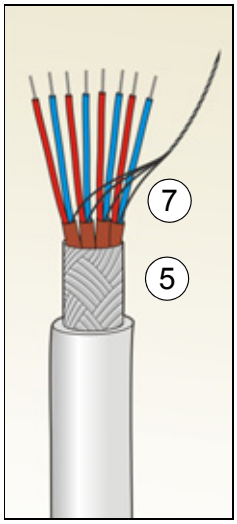

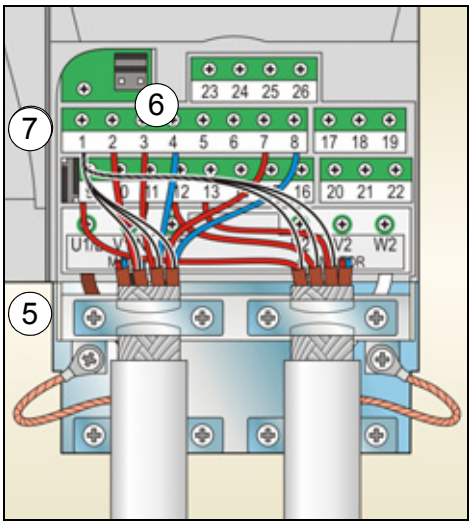

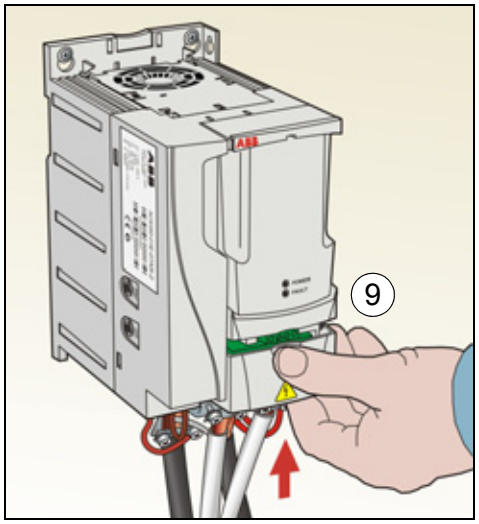

Connecting the embedded fieldbus

Embedded fieldbus is connected to the drive with EIA-485 or RS-232.

Connection diagram

EIA-485

The figure below shows the fieldbus connection.

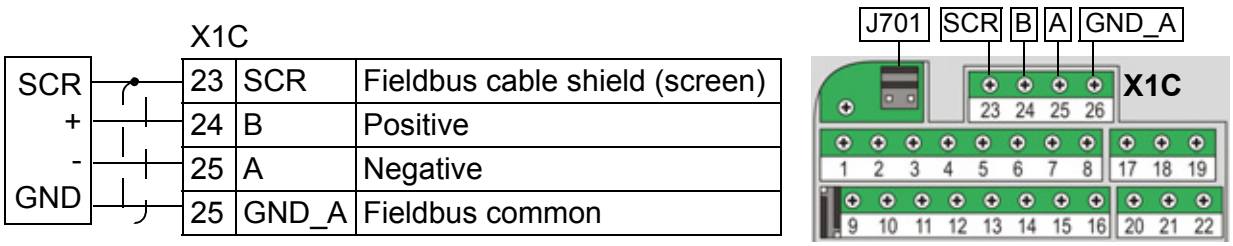

X1C		
23	SCR	Fieldbus cable shield (screen)
24	B	Positive
25	A	Negative
25	GND_A	Fieldbus common

Terminate the EIA-485 bus with a 120 ohm resistor at the end of the network by setting the jumper J701 shunts as in the figure below.

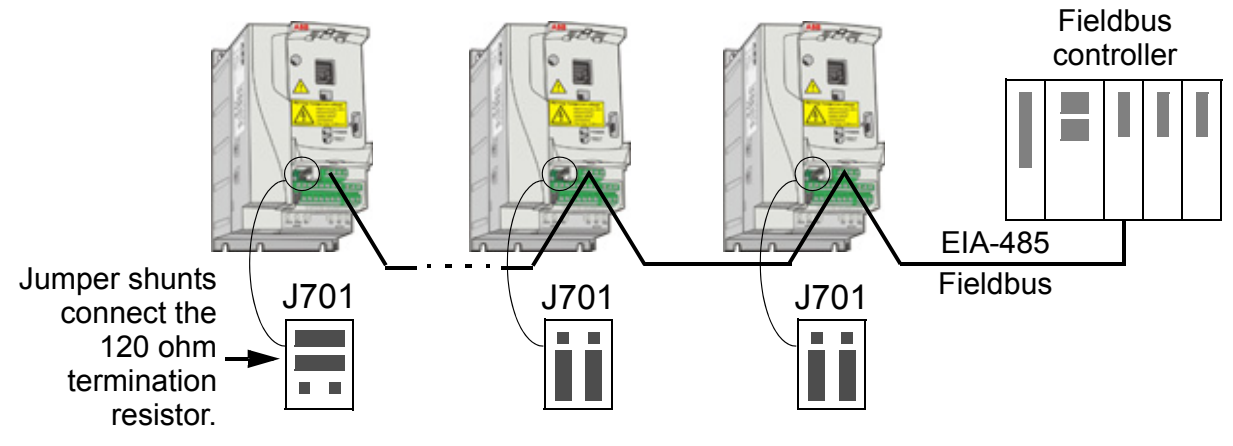

RS-232

Plug a communication cable into the control panel connection X2. The cable must be shorter than 3 meters.

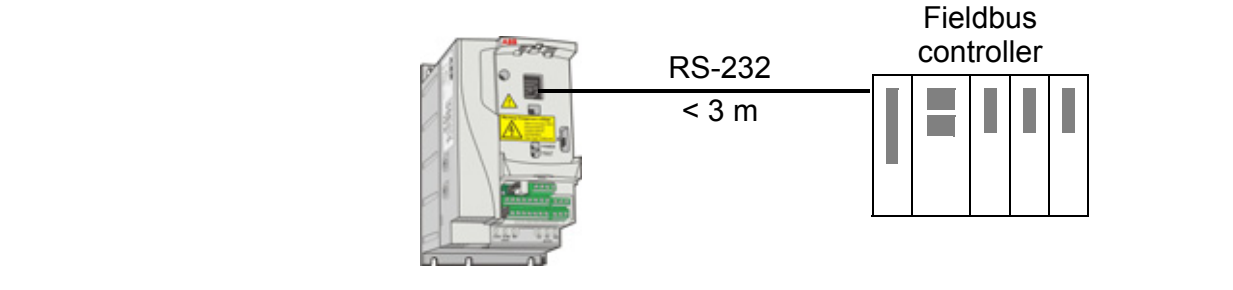

7

Installation checklist

Checking the installation

Check the mechanical and electrical installation of the drive before start-up. Go through the checklist below together with another person. Read chapter *Safety* on page *15* of this manual before you work on the drive.

	Check
MECHANICAL INSTALLATION	
☐	The ambient operating conditions are within allowed limits. (See *Mechanical installation: Checking the installation site* on page *29* as well as *Technical data: Losses, cooling data and noise* on page *332* and *Ambient conditions* on page *337*.)
☐	The drive is fixed properly on an even vertical non-flammable wall. (See *Mechanical installation* on page *29.*)
☐	The cooling air flows freely. (See *Mechanical installation*: *Free space around the drive* on page *30*.)
☐	The motor and the driven equipment are ready for start. (See *Planning the electrical installation*: *Checking the compatibility of the motor and drive* on page *36* as well as *Technical data: Motor connection data* on page *334*.)
ELECTRICAL INSTALLATION (See *Planning the electrical installation* on page *35* and *Electrical installation* on page *45*.)	
☐	For ungrounded and corner-grounded systems: The internal EMC filter is disconnected (EMC screw removed).
☐	The capacitors are reformed if the drive has been stored over a year.
☐	The drive is grounded properly.
☐	The input power voltage matches the drive nominal input voltage.
☐	The input power connections at U1, V1 and W1 are OK and tightened with the correct torque.
☐	Appropriate input power fuses and disconnector are installed.
☐	The motor connections at U2, V2 and W2 are OK and tightened with the correct torque.

	Check
☐	The motor cable, input power cable and control cables are routed separately.
☐	The external control (I/O) connections are OK.
☐	The input power voltage cannot be applied to the output of the drive (with a bypass connection).
☐	Terminal cover and, for NEMA 1, hood and connection box, are in place.

8

Start-up and control with I/O

What this chapter contains

The chapter tells how to:

- perform the start-up
- start, stop, change the direction of the motor rotation and adjust the speed of the motor through the I/O interface

Using the control panel to do these tasks is explained briefly in this chapter. For details on how to use the control panel, refer to chapter *Control panels* on page *67*.

How to start up the drive

WARNING! The start-up may only be carried out by a qualified electrician.

The safety instructions given in chapter *Safety* on page *15* must be followed during the start-up procedure.

The drive starts up automatically at power up if the external run command is on and the drive is in the remote control mode.

Check that the starting of the motor does not cause any danger. **De-couple the driven machine** if there is a risk of damage in case of incorrect direction of rotation.

Note: By default, parameter *1611 PARAMETER VIEW* is set to 2 (*SHORT VIEW*), and you cannot see all actual signals and parameters. To be able to view them, set parameter *1611 PARAMETER VIEW* to 3 (*LONG VIEW*).

- Check the installation. See the checklist in chapter *Installation checklist* on page *55*.

How you start up the drive depends on the control panel you have, if any.

- **If you have no control panel**, follow the instructions given in section *How to start up the drive without a control panel* on page *58*.
- **If you have a Basic control panel (ACS-CP-S)**, follow the instructions given in section *How to perform a manual start-up* on page *59*.
- **If you have an Assistant control panel (ACS-CP-A or ACS-CP-D)**, you can either run the Start-up assistant (see section *How to perform a guided start-up* on page *62*) or perform a manual start-up (see section *How to perform a manual start-up* on page *59*).

  The Start-up assistant, which is included in the Assistant control panel only, guides you through all essential settings to be done. In the manual start-up, the drive gives no guidance; you go through the very basic settings by following the instructions given in section *How to perform a manual start-up* on page *59*.

How to start up the drive without a control panel

POWER-UP	
☐	Apply input power and wait for a moment.
☐	Check that the red LED is not lit and the green LED is lit but not blinking.
The drive is now ready for use.	

How to perform a manual start-up

For the manual start-up, you can use the Basic control panel or the Assistant control panel. The instructions below are valid for both control panels, but the displays shown are the Basic control panel displays, unless the instruction applies to the Assistant control panel only.

Before you start, ensure that you have the motor nameplate data on hand.

POWER-UP

☐ Apply input power.

The Basic control panel powers up into the Output mode.

The Assistant control panel asks if you want to run the Start-up assistant. If you press EXIT, the Start-up assistant is not run, and you can continue with manual start-up in a similar manner as described below for the Basic control panel.

```
REM                    0.0 Hz
OUTPUT                 FWD
```

```
REM ↻CHOICE
Do you want to
use the start-up
assistant?
  Yes
  No
EXIT | 00:00 | OK
```

MANUAL ENTRY OF START-UP DATA (parameter group 99)

☐ If you have an Assistant control panel, select the language (the Basic control panel does not support languages). See parameter *9901* for the values of the available language alternatives.

For instructions on how to set parameters with the Assistant control panel, see section *Assistant control panel* on page *80*.

```
REM ↻PAR EDIT
9901 LANGUAGE
     ENGLISH
[0]
CANCEL | 00:00 | SAVE
```

☐ Enter the motor data from the motor nameplate:

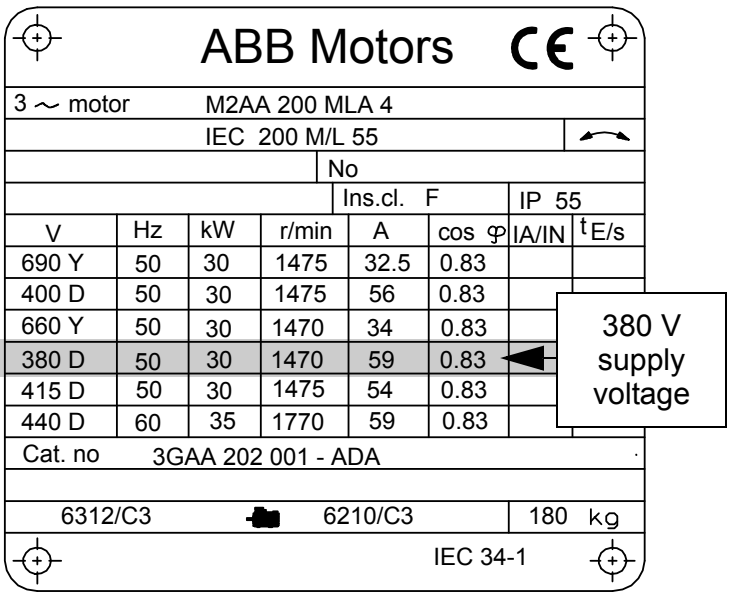

- nominal motor voltage (parameter *9905*)

Setting of parameter *9905* is shown below as an example of parameter setting with the Basic control panel. You find more detailed instructions in section *Basic control panel* on page *69*.

Note: Set the motor data to exactly the same value as on the motor nameplate. For example, if the nominal motor speed is 1470 rpm on the nameplate, setting the value of parameter *9908 MOTOR NOM SPEED* to 1500 rpm results in the wrong operation of the drive.

```
REM        9905
           PAR  FWD
```

1. To go to the Main menu, press if the bottom line shows OUTPUT; otherwise press repeatedly until you see MENU at the bottom.

REM rEF MENU FWD

2. Press keys / until you see “PAr”, and press .

REM -01- PAR FWD

3. Find the appropriate parameter group with keys / and press .

REM 9901 PAR FWD

4. Find the appropriate parameter in the group with keys / .

REM 9905 PAR FWD

5. Press and hold for about two seconds until the parameter value is shown with SET under the value.

REM 400 V PAR SET FWD

6. Change the value with keys / . The value changes faster while you keep the key pressed down.

REM 380 V PAR SET FWD

7. Save the parameter value by pressing .

REM 9905 PAR FWD

Enter the rest of the motor data:

- nominal motor current (parameter *9906*)

  Allowed range: 0.2…2.0 · I_{2N} A

REM 9906 PAR FWD

- nominal motor frequency (parameter *9907*)

REM 9907 PAR FWD

- nominal motor speed (parameter *9908*)

REM 9908 PAR FWD

- nominal motor power (parameter *9909*)

REM 9909 PAR FWD

☐ Select the application macro (parameter *9902*) according to how the control cables are connected. The default value 1 (*ABB STANDARD*) is suitable in most cases.

REM 9902 PAR FWD

DIRECTION OF THE MOTOR ROTATION		
☐	Check the direction of the motor rotation. • If the drive is in remote control (REM shown on the left), switch to local control by pressing LOC/REM. • To go to the Main menu, press ▽ if the bottom line shows OUTPUT; otherwise press ▽ repeatedly until you see MENU at the bottom. • Press keys ▲/▼ until you see “rEF” and press ▽. • Increase the frequency reference from zero to a small value with key ▲. • Press ⊕ to start the motor. • Check that the actual direction of the motor is the same as indicated on the display (FWD means forward and REV reverse). • Press ⊖ to stop the motor. To change the direction of the motor rotation: • If parameter *9914 PHASE INVERSION* is not visible, first set parameter *1611 PARAMETER VIEW* to 3 (*LONG VIEW*). • Invert the phases by changing the value of parameter *9914* to the opposite, ie from 0 (*NO*) to 1 (*YES*), or vice versa. • Verify your work by applying input power and repeating the check as described above. Set parameter *1611* back to 2 (*SHORT VIEW*).	LOC XXX Hz SET FWD 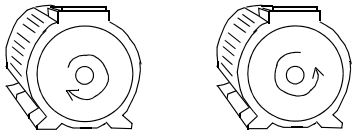 forward direction reverse direction LOC 1611 PAR FWD LOC 9914 PAR FWD
FINAL CHECK		
☐	Check that the drive state is OK. Basic control panel: Check that there are no faults or alarms shown on the display. If you want to check the LEDs on the front of the drive, switch first to remote control (otherwise a fault is generated) before removing the panel and verifying that the red LED is not lit and the green LED is lit but not blinking. Assistant control panel: Check that there are no faults or alarms shown on the display and that the panel LED is green and does not blink.	
The drive is now ready for use.		

How to perform a guided start-up

To be able to perform the guided start-up, you need the Assistant control panel.

Before you start, ensure that you have the motor nameplate data on hand.

POWER-UP		
☐	Apply input power. The control panel first asks if you want to use the Start-up assistant. • Press OK (when **Yes** is highlighted) to run the Start-up assistant. • Press EXIT if you do not want to run the Start-up assistant. • Press key ▼ to highlight **No** and then press OK if you want to make the panel ask (or not ask) the question about running the Start-up assistant again the next time you switch on the power to the drive.	REM ↻CHOICE Do you want to use the start-up assistant? Yes No EXIT 00:00 OK REM ↻CHOICE Show start-up assistant on next boot? Yes No EXIT 00:00 OK
SELECTING THE LANGUAGE		
☐	If you decided to run the Start-up assistant, the display then asks you to select the language. Scroll to the desired language with keys ▲/▼ and press SAVE to accept. If you press EXIT, the Start-up assistant is stopped.	REM ↻PAR EDIT 9901 LANGUAGE ENGLISH [0] CANCEL 00:00 SAVE
STARTING THE GUIDED SET-UP		
☐	The Start-up assistant now guides you through the set-up tasks, starting with the motor set-up. Set the motor data to exactly the same value as on the motor nameplate. Scroll to the desired parameter value with keys ▲/▼ and press SAVE to accept and continue with the Start-up assistant. **Note:** At any time, if you press EXIT, the Start-up assistant is stopped and the display goes to the Output mode.	REM ↻PAR EDIT 9905 MOTOR NOM VOLT 220 V EXIT 00:00 SAVE
☐	The basic start-up is now completed. However, it might be useful at this stage to set the parameters required by your application and continue with the application set-up as suggested by the Start-up assistant.	REM ↻CHOICE Do you want to continue with application setup? Continue Skip EXIT 00:00 OK

☐	Select the application macro according to which the control cables are connected. Continue with the application set-up. After completing a set-up task, the Start-up assistant suggests the next one. • Press OK (when `Continue` is highlighted) to continue with the suggested task. • Press key ▼ to highlight `Skip` and then press OK to move to the following task without doing the suggested task. • Press EXIT to stop the Start-up assistant.	REM ↻PAR EDIT 9902 APPLIC MACRO ABB STANDARD [1] EXIT 00:00 SAVE REM ↻CHOICE Do you want to continue with EXT1 reference setup? Continue Skip EXIT 00:00 OK
DIRECTION OF THE MOTOR ROTATION		
☐	Check the direction of the motor rotation. • If the drive is in remote control (REM shown on the status line), switch to local control by pressing LOC/REM. • If you are not in the Output mode, press EXIT repeatedly until you get there. • Increase the frequency reference from zero to a small value with key ▲. • Press ◇ to start the motor. • Check that the actual direction of the motor is the same as indicated on the display (↻ means forward and ↺ reverse). • Press ▽ to stop the motor. To change the direction of the motor rotation: • If parameter *9914 PHASE INVERSION* is not visible, first set parameter *1611 PARAMETER VIEW* to 3 (*LONG VIEW*). • Invert the phases by changing the value of parameter *9914* to the opposite, ie from 0 (*NO*) to 1 (*YES*), or vice versa. • Verify your work by applying input power and repeating the check as described above. • Set parameter *1611* back to 2 (*SHORT VIEW*).	LOC ↻ xx.xHz xx.x Hz x .x A xx.x % DIR 00:00 MENU 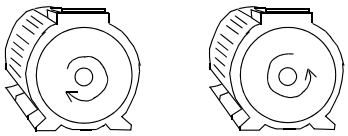 forward direction reverse direction LOC ↻PAR EDIT 1611 PARAMETER VIEW LONG VIEW [3] CANCEL 00:00 SAVE LOC ↻PAR EDIT 9914 PHASE INVERSION YES [1] CANCEL 00:00 SAVE

FINAL CHECK		
☐	After the whole set-up is completed, check that there are no faults or alarms shown on the display and the panel LED is green and does not blink.	
The drive is now ready for use.		

How to control the drive through the I/O interface

The table below instructs how to operate the drive through the digital and analog inputs when:

- the motor start-up is performed, and
- the default (standard) parameter settings are valid.

Displays of the Basic control panel are shown as an example.

PRELIMINARY SETTINGS	
If you need to change the direction of rotation, check that parameter *1003 DIRECTION* is set to 3 (*REQUEST*).	
Ensure that the control connections are wired according to the connection diagram given for the ABB standard macro.	See section *Default I/O connection diagram* on page *52*.
Ensure that the drive is in remote control. Press key (LOC/REM) to switch between remote and local control.	In remote control, the panel display shows text REM.
STARTING AND CONTROLLING THE SPEED OF THE MOTOR	
Start by switching digital input DI1 on. Basic control panel: Text FWD starts flashing fast and stops after the setpoint is reached Assistant control panel: The arrow starts rotating. It is dotted until the setpoint is reached.	REM 0.0 Hz OUTPUT FWD
Regulate the drive output frequency (motor speed) by adjusting the voltage of analog input AI1.	REM 50.0 Hz OUTPUT FWD
CHANGING THE DIRECTION OF MOTOR ROTATION	
Reverse direction: Switch digital input DI2 on.	REM 50.0 Hz OUTPUT REV
Forward direction: Switch digital input DI2 off.	REM 50.0 Hz OUTPUT FWD
STOPPING THE MOTOR	
Switch digital input DI1 off. The motor stops. Basic control panel: Text FWD starts flashing slowly. Assistant control panel: The arrow stops rotating.	REM 0.0 Hz OUTPUT FWD

9

Control panels

What this chapter contains

The chapter describes the control panel keys, LED indicators and display fields. It also instructs in using the panel in control, monitoring and changing the settings.

About control panels

Use a control panel to control the ACS310, read status data, and adjust parameters. The drive works with either of two different control panel types:

- Basic control panel – This panel (described in section *Basic control panel* on page *69*) provides basic tools for manual entry of parameter values.
- Assistant control panel – This panel (described in section *Assistant control panel* on page *80*) includes pre-programmed assistants to automate the most common parameter setups. The panel provides language support. It is available with different language sets.

Applicability

The manual is applicable to panels with the panel revisions and the panel firmware versions given in the table below.

Panel type	Type code	Panel revision	Panel firmware version
Basic control panel	ACS-CP-C	M or later	1.13 or later
Assistant control panel	ACS-CP-A	E or later	2.04 or later
Assistant control panel (Asia)	ACS-CP-D	P or later	2.04 or later

To find out the panel revision, see the label on the back of the panel. An example label and explanation of the label contents are shown below.

1	Panel type code
2	Serial number of format MYYWWRXXXX, where M: Manufacturer YY: 08, 09, 10, …, for 2008, 2009, 2010, … WW: 01, 02, 03, … for week 1, week 2, week 3, … R: A, B, C, … for panel revision XXXX: Integer starting every week from 0001
3	RoHS mark (the label of your drive shows the valid markings)

To find out the panel firmware version of your Assistant control panel, see page *84*. For the Basic control panel see page *72*.

See parameter *9901 LANGUAGE* to find out the languages supported by the different Assistant control panels.

Basic control panel

Features

The Basic control panel features:

- numeric control panel with an LCD display
- copy function – parameters can be copied to the control panel memory for later transfer to other drives or for backup of a particular system.

Overview

The following table summarizes the key functions and displays on the Basic control panel.

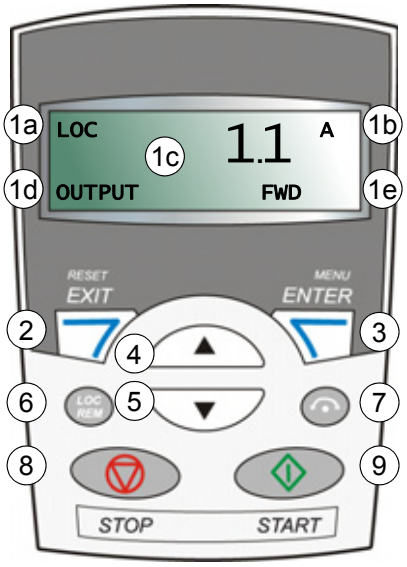

No.	Use
1	LCD display – Divided into five areas: a. Upper left – Control location: LOC: drive control is local, that is, from the control panel REM: drive control is remote, such as the drive I/O or fieldbus. b. Upper right – Unit of the displayed value. c. Center – Variable; in general, shows parameter and signal values, menus or lists. Shows also fault and alarm codes. d. Lower left and center – Panel operation state: OUTPUT: Output mode PAR: Parameter mode MENU: Main menu. FAULT: Fault mode. e. Lower right – Indicators: FWD (forward) / REV (reverse): direction of the motor rotation Flashing slowly: stopped Flashing rapidly: running, not at setpoint Steady: running, at setpoint SET: Displayed value can be modified (in the Parameter and Reference modes).
2	RESET/EXIT – Exits to the next higher menu level without saving changed values. Resets faults in the Output and Fault modes.
3	MENU/ENTER – Enters deeper into menu level. In the Parameter mode, saves the displayed value as the new setting.
4	Up – • Scrolls up through a menu or list. • Increases a value if a parameter is selected. • Increases the reference value in the Reference mode. • Holding the key down changes the value faster.
5	Down – • Scrolls down through a menu or list. • Decreases a value if a parameter is selected. • Decreases the reference value in the Reference mode. • Holding the key down changes the value faster.
6	LOC/REM – Changes between local and remote control of the drive.
7	DIR – Changes the direction of the motor rotation.
8	STOP – Stops the drive in local control.
9	START – Starts the drive in local control.

Operation

You can operate the control panel with the help of menus and keys. You can select an option, for example, an operation mode or parameter, by scrolling the ▲ and ▼ arrow keys until the option is visible on the display and then pressing the key.

With the key, you can return to the previous operation level without saving the made changes.

The Basic control panel has five panel modes: *Output mode*, *Reference mode*, *Parameter mode*, *Copy mode* and Fault mode. The operation in the first four modes is described in this chapter. When a fault or alarm occurs, the panel goes automatically to the Fault mode showing the fault or alarm code. You can reset the fault or alarm in the Output or Fault mode (see chapter *Fault tracing* on page *301*).

After the power is switched on, the panel is in the Output mode, where you can start, stop, change the direction, switch between local and remote control and monitor up to three actual values (one at a time). To do other tasks, go first to the Main menu and select the appropriate mode.

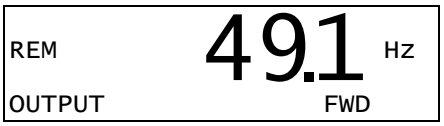

How to perform common tasks

The table below lists common tasks, the mode in which you can perform them and the page number where the steps of the task are described in detail.

Task	Mode	Page
How to find out the panel firmware version	At power up	*72*
How to switch between local and remote control	Any	*72*
How to start and stop the drive	Any	*72*
How to change the direction of the motor rotation	Any	*73*
How to browse the monitored signals	Output	*74*
How to set the frequency reference	Reference	*75*
How to change the value of a parameter	Parameter	*76*
How to select the monitored signals	Parameter	*77*
How to reset faults and alarms	Output, Fault	*301*
How to copy parameters from the drive to the control panel	Copy	*79*
How to restore parameters from the control panel to the drive	Copy	*79*

How to find out the panel firmware version

Step	Action	Display
1.	If the power is switched on, switch it off.	
2.	Keep key pressed down while you switch on the power and read the panel firmware version shown on the display. When you release the key, the panel goes to the Output mode.	X.XX

How to start, stop and switch between local and remote control

You can start, stop and switch between local and remote control in any mode. To be able to start or stop the drive, the drive must be in local control.

Step	Action	Display
1.	• To switch between remote control (REM shown on the left) and local control (LOC shown on the left), press LOC/REM. **Note:** Switching to local control can be disabled with parameter *1606 LOCAL LOCK*. After pressing the key, the display briefly shows message “LoC” or “rE”, as appropriate, before returning to the previous display. The very first time the drive is powered up, it is in remote control (REM) and controlled through the drive I/O terminals. To switch to local control (LOC) and control the drive using the control panel, press LOC/REM. The result depends on how long you press the key: • If you release the key immediately (the display flashes “LoC”), the drive stops. Set the local control reference as instructed on page *75*. • If you press the key for about two seconds (release when the display changes from “LoC” to “LoC r”), the drive continues as before. The drive copies the current remote values for the run/stop status and the reference, and uses them as the initial local control settings. • To stop the drive in local control, press . • To start the drive in local control, press .	LOC 49.1 Hz OUTPUT FWD LOC LoC FWD Text FWD or REV on the bottom line starts flashing slowly. Text FWD or REV on the bottom line starts flashing rapidly. It stops flashing when the drive reaches the setpoint.

How to change the direction of the motor rotation

You can change the direction of the motor rotation in any mode.

Step	Action	Display
1.	If the drive is in remote control (REM shown on the left), switch to local control by pressing (LOC/REM). The display briefly shows message “LoC” before returning to the previous display.	LOC 49.1 Hz OUTPUT FWD
2.	To change the direction from forward (FWD shown at the bottom) to reverse (REV shown at the bottom), or vice versa, press (⟲). **Note**: Parameter *1003 DIRECTION* must be set to 3 (*REQUEST*).	LOC 49.1 Hz OUTPUT REV

Output mode

In the Output mode, you can:

- monitor actual values of up to three group *01 OPERATING DATA* signals, one signal at a time
- start, stop, change the direction and switch between local and remote control.

You can enter the Output mode by pressing 7 until the display shows text OUTPUT at the bottom.

The display shows the value of one group *01 OPERATING DATA* signal. The unit is shown on the right. Page *77* tells how to select up to three signals to be monitored in the Output mode. The table below shows how to view them one at a time.

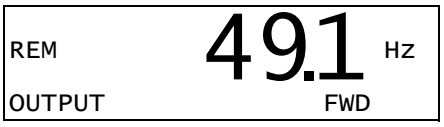

How to browse the monitored signals

Step	Action	Display
1.	If more than one signals have been selected to be monitored (see page *77*), you can browse them in the Output mode. To browse the signals forward, press key ▲ repeatedly. To browse them backward, press key ▼ repeatedly.	REM 49.1 Hz OUTPUT FWD REM 0.5 A OUTPUT FWD REM 10.7 % OUTPUT FWD

Reference mode

In the Reference mode, you can:

- set the frequency reference
- start, stop, change the direction and switch between local and remote control.

How to set the frequency reference

Step	Action	Display
1.	Go to the Main menu by pressing if you are in the Output mode, otherwise by pressing repeatedly until you see MENU at the bottom.	REM PAr MENU FWD
2.	If the drive is in remote control (REM shown on the left), switch to local control by pressing LOC/REM. The display briefly shows “LoC” before switching to local control. **Note**: With group *11 REFERENCE SELECT*, you can allow the reference modification in remote control (REM).	LOC PAr MENU FWD
3.	If the panel is not in the Reference mode (“rEF” not visible), press key ▲ or ▼ until you see “rEF” and then press . Now the display shows the current reference value with SET under the value.	LOC rEF MENU FWD LOC 49.1 Hz SET FWD
4.	• To increase the reference value, press ▲. • To decrease the reference value, press ▼. The value changes immediately when you press the key. It is stored in the drive permanent memory and restored automatically after power switch-off.	LOC 50.0 Hz SET FWD

Parameter mode

In the Parameter mode, you can:

- view and change parameter values
- select and modify the signals shown in the Output mode
- start, stop, change the direction and switch between local and remote control.

How to select a parameter and change its value

Step	Action	Display
1.	Go to the Main menu by pressing if you are in the Output mode, otherwise by pressing repeatedly until you see MENU at the bottom.	LOC rEF MENU FWD
2.	If the panel is not in the Parameter mode (“PAr” not visible), press key ▲ or ▼ until you see “PAr” and then press . The display shows the number of one of the parameter groups.	LOC PAr MENU FWD LOC -01- PAR FWD
3.	Use keys ▲ and ▼ to find the desired parameter group.	LOC -11- PAR FWD
4.	Press . The display shows one of the parameters in the selected group.	LOC 1101 PAR FWD
5.	Use keys ▲ and ▼ to find the desired parameter.	LOC 1103 PAR FWD
6.	Press and hold for about two seconds until the display shows the value of the parameter with SET underneath indicating that changing of the value is now possible. **Note:** When SET is visible, pressing keys ▲ and ▼ simultaneously changes the displayed value to the default value of the parameter.	LOC 1 PAR SET FWD
7.	Use keys ▲ and ▼ to select the parameter value. When you have changed the parameter value, SET starts flashing. • To save the displayed parameter value, press . • To cancel the new value and keep the original, press .	LOC 2 PAR SET FWD LOC 1103 PAR FWD

How to select the monitored signals

Step	Action	Display
1.	You can select which signals are monitored in the Output mode and how they are displayed with group *34 PANEL DISPLAY* parameters. See page *76* for detailed instructions on changing parameter values. By default, the display shows three signals: Signal 1: *0103 OUTPUT FREQ* Signal 2: *0104 CURRENT* Signal 3: *0105 TORQUE* To change the default signals, select up to three signals from group *01 OPERATING DATA* to be shown. Signal 1: Change the value of parameter *3401 SIGNAL1 PARAM* to the index of the signal parameter in group *01 OPERATING DATA* (= number of the parameter without the leading zero), for example, 105 means parameter *0105 TORQUE*. Value 100 means that no signal is displayed. Repeat for signals 2 (*3408 SIGNAL2 PARAM*) and 3 (*3415 SIGNAL3 PARAM*). For example, if *3401* = 0 and *3415* = 0, browsing is disabled and only the signal specified by *3408* appears in the display. If all three parameters are set to 0, ie no signals are selected for monitoring, the panel displays text “n.A”.	LOC 103 PAR SET FWD LOC 104 PAR SET FWD LOC 105 PAR SET FWD
2.	Specify the decimal point location, or use the decimal point location and unit of the source signal (setting 9 [*DIRECT*]). Bar graphs are not available for basic control panel. For details, see parameter *3404*. Signal 1: parameter *3404 OUTPUT1 DSP FORM* Signal 2: parameter *3411 OUTPUT2 DSP FORM* Signal 3: parameter *3418 OUTPUT3 DSP FORM*.	LOC 9 PAR SET FWD
3.	Select the units to be displayed for the signals. This has no effect if parameter *3404*/*3411*/*3418* is set to 9 (*DIRECT*). For details, see parameter *3405*. Signal 1: parameter *3405 OUTPUT1 UNIT* Signal 2: parameter *3412 OUTPUT2 UNIT* Signal 3: parameter *3419 OUTPUT3 UNIT*.	LOC 3 PAR SET FWD
4.	Select the scalings for the signals by specifying the minimum and maximum display values. This has no effect if parameter *3404*/*3411*/*3418* is set to 9 (*DIRECT*). For details, see parameters *3406* and *3407*. Signal 1: parameters *3406 OUTPUT1 MIN* and *3407 OUTPUT1 MAX* Signal 2: parameters *3413 OUTPUT2 MIN* and *3414 OUTPUT2 MAX* Signal 3: parameters *3420 OUTPUT3 MIN* and *3421 OUTPUT3 MAX*.	LOC 0.0 Hz PAR SET FWD LOC 500.0 Hz PAR SET FWD

Copy mode

The Basic control panel can store a full set of drive parameters and up to two user sets of drive parameters to the control panel. Uploading and downloading can be performed in local control. The control panel memory is non-volatile.

In the Copy mode, you can do the following:

- Copy all parameters from the drive to the control panel (uL – Upload). This includes all defined user sets of parameters and internal (not adjustable by the user) parameters.
- Restore the full parameter set from the control panel to the drive (dL A – Download all). This writes all parameters, including the internal non-user-adjustable motor parameters, to the drive. It does not include the user sets of parameters.

  Note: Only use this function to restore a drive, or to transfer parameters to systems that are identical to the original system.
- Copy a partial parameter set from the control panel to a drive (dL P – Download partial). The partial set does not include user sets, internal motor parameters, parameters *9905*…*9909*, *1605*, *1607*, *5201*, nor any group *53 EFB PROTOCOL* parameters.

  The source and target drives and their motor sizes do not need to be the same.
- Copy user set 1 parameters from the control panel to the drive (dL u1 – Download user set 1). A user set includes group *99 START-UP DATA* parameters and the internal motor parameters.

  The function is only shown on the menu when User set 1 has been first saved using parameter *9902 APPLIC MACRO* (see section *user macros* on page *112*) and then uploaded to panel.
- Copy user set 2 parameters from the control panel to the drive (dL u2 – Download user set 2). As dL u1 – Download User set 1 above.
- Start, stop, change the direction and switch between local and remote control.

How to upload and download parameters

For the upload and download functions available, see above. Note that the drive has to be in local control for uploading and downloading.

Step	Action	Display
1.	Go to the Main menu by pressing if you are in the Output mode, otherwise by pressing repeatedly until you see MENU at the bottom.	LOC PAr MENU FWD
2.	If the panel is not in the Copy mode (“CoPY” not visible), press key or until you see “CoPY”. Press .	LOC CoPY MENU FWD LOC uL MENU FWD
3.	To upload all parameters (including user sets) from the drive to the control panel, step to “uL” with keys and . Press . During the transfer, the display shows the degree of completion in percent. To perform downloads, step to the appropriate operation (here “dL A”, Download all, is used as an example) with keys and . Press . During the transfer, the display shows the degree of completion in percent.	LOC uL MENU FWD LOC uL 50 % FWD LOC dL A MENU FWD LOC dL 50 % FWD

Basic control panel alarm codes

In addition to the faults and alarms generated by the drive (see chapter *Fault tracing* on page *301*), the Basic control panel indicates control panel alarms with a code of form A5xxx. See section *Alarms generated by the Basic control panel* on page *307* for a list of the alarm codes and descriptions.

Assistant control panel

Features

The Assistant control panel features:

- alphanumeric control panel with an LCD display
- language selection for the display
- Start-up assistant to ease drive commissioning
- copy function – parameters can be copied to the control panel memory for later transfer to other drives or for backup of a particular system.
- context sensitive help
- real time clock.

Overview

The following table summarizes the key functions and displays on the Assistant control panel

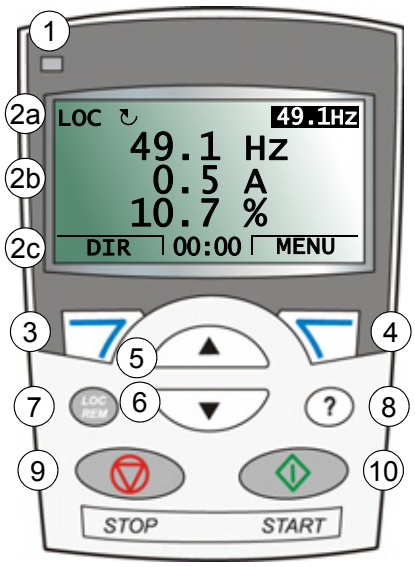

No.	Use
1	Status LED – Green for normal operation. If LED is flashing, or red, see section *LEDs* on page *323*.
2	LCD display – Divided into three main areas: f. Status line – variable, depending on the mode of operation, see section *Status line* on page *82*. g. Center – variable; in general, shows signal and parameter values, menus or lists. Shows also faults and alarms. h. Bottom line – shows current functions of the two soft keys and, if enabled, the clock display.
3	Soft key 1 – Function depends on the context. The text in the lower left corner of the LCD display indicates the function.
4	Soft key 2 – Function depends on the context. The text in the lower right corner of the LCD display indicates the function.
5	Up – • Scrolls up through a menu or list displayed in the center of the LCD display. • Increments a value if a parameter is selected. • Increments the reference value if the upper right corner is highlighted. Holding the key down changes the value faster.
6	Down – • Scrolls down through a menu or list displayed in the center of the LCD display. • Decrements a value if a parameter is selected. • Decrements the reference value if the upper right corner is highlighted. Holding the key down changes the value faster.
7	LOC/REM – Changes between local and remote control of the drive.
8	Help – Displays context sensitive information when the key is pressed. The information displayed describes the item currently highlighted in the center of the display.
9	STOP – Stops the drive in local control.
10	START – Starts the drive in local control.

Status line

The top line of the LCD display shows the basic status information of the drive.

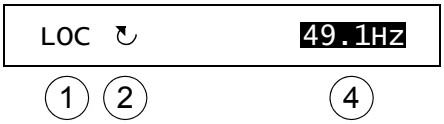

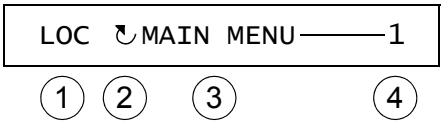

No.	Field	Alternatives	Significance
1	Control location	LOC	Drive control is local, that is, from the control panel.
		REM	Drive control is remote, such as the drive I/O or fieldbus.
2	State	↻	Forward shaft direction
		↺	Reverse shaft direction
		Rotating arrow	Drive is running at setpoint.
		Dotted rotating arrow	Drive is running but not at setpoint.
		Stationary arrow	Drive is stopped.
		Dotted stationary arrow	Start command is present, but the motor is not running, eg because start enable is missing.
3	Panel operation mode		• Name of the current mode • Name of the list or menu shown • Name of the operation state, eg PAR EDIT.
4	Reference value or number of the selected item		• Reference value in the Output mode • Number of the highlighted item, eg mode, parameter group or fault.

Operation

You operate the control panel with menus and keys. The keys include two context-sensitive soft keys, whose current function is indicated by the text shown in the display above each key.

You select an option, eg operation mode or parameter, by scrolling the ▲ and ▼ arrow keys until the option is highlighted (in reverse video) and then pressing the relevant soft key. With the right soft key you usually enter a mode, accept an option or save the changes. The left soft key is used to cancel the made changes and return to the previous operation level.

The Assistant control panel has nine panel modes: *Output mode*, *Parameter mode*, *Assistants mode*, *Changed parameters mode*, *Fault logger mode*, *Time and date mode*, *Parameter backup mode*, *IO settings mode* and Fault mode. The operation in the first eight modes is described in this chapter. When a fault or alarm occurs, the panel goes automatically to the Fault mode showing the fault or alarm. You can reset it in the Output or Fault mode (see chapter *Fault tracing* on page *301*).

Initially, the panel is in the Output mode, where you can start, stop, change the direction, switch between local and remote control, modify the reference value and monitor up to three actual values.

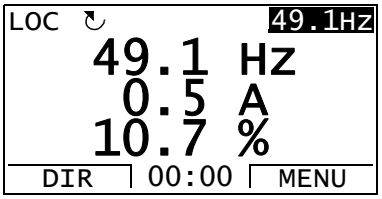

To do other tasks, go first to the Main menu and select the appropriate mode on the menu. The status line (see section *Status line* on page *82*) shows the name of the current menu, mode, item or state.

How to do common tasks

The table below lists common tasks, the mode in which you can perform them and the page number where the steps to do the task are described in detail.

Task	Mode	Page
How to get help	Any	*84*
How to find out the panel version	At power up	*84*
How to adjust the display contrast	Output	*87*
How to switch between local and remote control	Any	*85*
How to start and stop the drive	Any	*86*
How to change the direction of the motor rotation	Output	*86*
How to set the frequency reference	Output	*87*
How to change the value of a parameter	Parameters	*88*
How to select the monitored signals	Parameters	*89*
How to perform guided tasks (specification of related parameter sets) with assistants	Assistants	*91*
How to view and edit changed parameters	Changed parameters	*93*
How to view faults	Fault logger	*94*
How to reset faults and alarms	Output, Fault	*301*
How to show/hide the clock, change date and time formats, set the clock and enable/disable automatic clock transitions according to the daylight saving changes	Time and date	*95*
How to copy parameters from the drive to the control panel	Parameter backup	*98*
How to restore parameters from the control panel to the drive	Parameter backup	*98*
How to view backup information	Parameter backup	*99*
How to edit and change parameter settings related to I/O terminals	IO Settings	*100*

How to get help

Step	Action	Display
1.	Press (?) to read the context-sensitive help text for the item that is highlighted. If help text exists for the item, it is shown on the display.	LOC ↻PAR GROUPS——10 01 OPERATING DATA 03 FB ACTUAL SIGNALS 04 FAULT HISTORY 10 START/STOP/DIR 11 REFERENCE SELECT EXIT | 00:00 | SEL LOC ↻HELP—————— This group defines external sources (EXT1 and EXT2) for commands that enable start, stop and EXIT | 00:00 |
2.	If the whole text is not visible, scroll the lines with keys ▲ and ▼.	LOC ↻HELP—————— external sources (EXT1 and EXT2) for commands that enable start, stop and direction changes. EXIT | 00:00 |
3.	After reading the text, return to the previous display by pressing EXIT.	LOC ↻PAR GROUPS——10 01 OPERATING DATA 03 FB ACTUAL SIGNALS 04 FAULT HISTORY 10 START/STOP/DIR 11 REFERENCE SELECT EXIT | 00:00 | SEL

How to find out the panel version

Step	Action	Display
1.	If the power is switched on, switch it off.	
2.	Keep key (?) pressed down while you switch on the power and read the information. The display shows the following panel information: Panel SW: panel firmware version ROM CRC: panel ROM check sum Flash Rev: flash content version Flash content comment. When you release the (?) key, the panel goes to the Output mode.	PANEL VERSION INFO Panel SW: x.xx Rom CRC: xxxxxxxxxx Flash Rev: x.xx xxxxxxxxxxxxxxxxxxxxx

How to start, stop and switch between local and remote control

You can start, stop and switch between local and remote control in any mode. To be able to start or stop the drive, the drive must be in local control.

Step	Action	Display
1.	• To switch between remote control (REM shown on the status line) and local control (LOC shown on the status line), press (LOC/REM). **Note:** Switching to local control can be disabled with parameter *1606 LOCAL LOCK*. The very first time the drive is powered up, it is in remote control (REM) and controlled through the drive I/O terminals. To switch to local control (LOC) and control the drive using the control panel, press (LOC/REM). The result depends on how long you press the key: • If you release the key immediately (the display flashes “Switching to the local control mode”), the drive stops. Set the local control reference as instructed on page *87*. • If you press the key for about two seconds, the drive continues as before. The drive copies the current remote values for the run/stop status and the reference, and uses them as the initial local control settings.	LOC ↻MESSAGE Switching to the local control mode. 00:00
	• To stop the drive in local control, press (Stop).	The arrow (↻ or ↺) on the status line stops rotating.
	• To start the drive in local control, press (Start).	The arrow (↻ or ↺) on the status line starts rotating. It is dotted until the drive reaches the setpoint.

Output mode

In the Output mode, you can:

- monitor actual values of up to three signals in group *01 OPERATING DATA*
- change the direction of the motor rotation
- set the frequency reference
- adjust the display contrast
- start, stop, change the direction and switch between local and remote control.

You get to the Output mode by pressing EXIT repeatedly.

The top right corner of the display shows the reference value. The center can be configured to show up to three signal values or bar graphs; see page *89* for instructions on selecting and modifying the monitored signals.

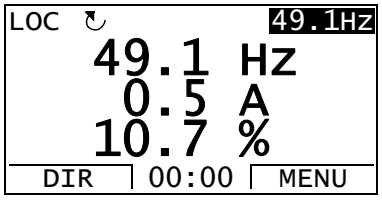

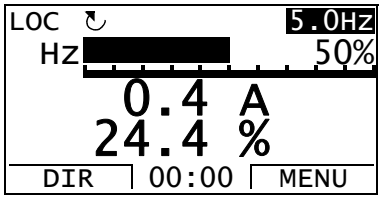

How to change the direction of the motor rotation

Step	Action	Display
1.	If you are not in the Output mode, press EXIT repeatedly until you get there.	REM 49.1Hz 49.1 Hz 0.5 A 10.7 % DIR 00:00 MENU
2.	If the drive is in remote control (REM shown on the status line), switch to local control by pressing LOC/REM. The display briefly shows a message about changing the mode and then returns to the Output mode.	LOC 49.1Hz 49.1 Hz 0.5 A 10.7 % DIR 00:00 MENU
3.	To change the direction from forward (↻ shown on the status line) to reverse (↺ shown on the status line), or vice versa, press DIR. **Note**: Parameter *1003 DIRECTION* must be set to 3 (*REQUEST*).	LOC 49.1Hz 49.1 Hz 0.5 A 10.7 % DIR 00:00 MENU

How to set the frequency reference

Step	Action	Display
1.	If you are not in the Output mode, press EXIT repeatedly until you get there.	REM ↻ 49.1Hz 49.1 Hz 0.5 A 10.7 % DIR 00:00 MENU
2.	If the drive is in remote control (REM shown on the status line), switch to local control by pressing LOC/REM. The display briefly shows a message about changing the mode and then returns to the Output mode. **Note**: With group *11 REFERENCE SELECT*, you can allow the reference modification in remote control.	LOC ↻ 49.1Hz 49.1 Hz 0.5 A 10.7 % DIR 00:00 MENU
3.	• To increase the highlighted reference value shown in the top right corner of the display, press ▲. The value changes immediately. It is stored in the drive permanent memory and restored automatically after power switch-off. • To decrease the value, press ▼.	LOC ↻ 50.0Hz 50.0 Hz 0.5 A 10.7 % DIR 00:00 MENU

How to adjust the display contrast

Step	Action	Display
1.	If you are not in the Output mode, press EXIT repeatedly until you get there.	LOC ↻ 49.1Hz 49.1 Hz 0.5 A 10.7 % DIR 00:00 MENU
2.	• To increase the contrast, press keys MENU and ▲ simultaneously. • To decrease the contrast, press keys MENU and ▼ simultaneously.	LOC ↻ 49.1Hz 49.1 Hz 0.5 A 10.7 % DIR 00:00 MENU

Parameters mode

In the Parameters mode, you can:

- view and change parameter values
- start, stop, change the direction and switch between local and remote control.

How to select a parameter and change its value

Step	Action	Display
1.	Go to the Main menu by pressing MENU if you are in the Output mode, otherwise by pressing repeatedly EXIT until you get to the Main menu.	LOC ↻MAIN MENU———1 PARAMETERS ASSISTANTS CHANGED PAR EXIT | 00:00 | ENTER
2.	Go to the Parameters mode by selecting PARAMETERS on the menu with keys ▲ and ▼, and pressing ENTER.	LOC ↻PAR GROUPS——01 01 OPERATING DATA 03 FB ACTUAL SIGNALS 04 FAULT HISTORY 10 START/STOP/DIR 11 REFERENCE SELECT EXIT | 00:00 | SEL
3.	Select the appropriate parameter group with keys ▲ and ▼. Press SEL.	LOC ↻PAR GROUPS——99 99 START-UP DATA 01 OPERATING DATA 03 FB ACTUAL SIGNALS 04 FAULT HISTORY 10 START/STOP/DIR EXIT | 00:00 | SEL LOC ↻PARAMETERS——— 9901 LANGUAGE ENGLISH 9902 APPLIC MACRO 9905 MOTOR NOM VOLT 9906 MOTOR NOM CURR EXIT | 00:00 | EDIT
4.	Select the appropriate parameter with keys ▲ and ▼. The current value of the parameter is shown below the selected parameter. Press EDIT.	LOC ↻PARAMETERS——— 9901 LANGUAGE 9902 APPLIC MACRO ABB STANDARD 9905 MOTOR NOM VOLT 9906 MOTOR NOM CURR EXIT | 00:00 | EDIT LOC ↻PAR EDIT——— 9902 APPLIC MACRO ABB STANDARD [1] CANCEL | 00:00 | SAVE
5.	Specify a new value for the parameter with keys ▲ and ▼. Pressing the key once increments or decrements the value. Holding the key down changes the value faster. Pressing the keys simultaneously replaces the displayed value with the default value.	LOC ↻PAR EDIT——— 9902 APPLIC MACRO 3-WIRE [2] CANCEL | 00:00 | SAVE

Step	Action	Display
6.	• To save the new value, press SAVE. • To cancel the new value and keep the original, press CANCEL.	LOC ↻PARAMETERS 9901 LANGUAGE 9902 APPLIC MACRO 3-WIRE 9905 MOTOR NOM VOLT 9906 MOTOR NOM CURR EXIT 00:00 EDIT

How to select the monitored signals

Step	Action	Display
1.	You can select which signals are monitored in the Output mode and how they are displayed with group *34 PANEL DISPLAY* parameters. See page *88* for detailed instructions on changing parameter values. By default, the display shows three signals: Signal 1: *0103 OUTPUT FREQ* Signal 2: *0104 CURRENT* Signal 3: *0105 TORQUE* To change the default signals, select up to three signals from group *01 OPERATING DATA* to be shown. Signal 1: Change the value of parameter *3401 SIGNAL1 PARAM* to the index of the signal parameter in group *01 OPERATING DATA* (= number of the parameter without the leading zero), eg 105 means parameter *0105 TORQUE*. Value 0 means that no signal is displayed. Repeat for signals 2 (*3408 SIGNAL2 PARAM*) and 3 (*3415 SIGNAL3 PARAM*).	LOC ↻PAR EDIT 3401 SIGNAL1 PARAM OUTPUT FREQ [103] CANCEL 00:00 SAVE LOC ↻PAR EDIT 3408 SIGNAL2 PARAM CURRENT [104] CANCEL 00:00 SAVE LOC ↻PAR EDIT 3415 SIGNAL3 PARAM TORQUE [105] CANCEL 00:00 SAVE
2.	Select how you want the signals to be displayed: as a decimal number or a bar graph. For decimal numbers, you can specify the decimal point location, or use the decimal point location and unit of the source signal (setting 9 [*DIRECT*]). For details, see parameter *3404*. Signal 1: parameter *3404 OUTPUT1 DSP FORM* Signal 2: parameter *3411 OUTPUT2 DSP FORM* Signal 3: parameter *3418 OUTPUT3 DSP FORM*.	LOC ↻PAR EDIT 3404 OUTPUT1 DSP FORM DIRECT [9] CANCEL 00:00 SAVE
3.	Select the units to be displayed for the signals. This has no effect if parameter *3404*/*3411*/*3418* is set to 9 (*DIRECT*). For details, see parameter *3405*. Signal 1: parameter *3405 OUTPUT1 UNIT* Signal 2: parameter *3412 OUTPUT2 UNIT* Signal 3: parameter *3419 OUTPUT3 UNIT*.	LOC ↻PAR EDIT 3405 OUTPUT1 UNIT Hz [3] CANCEL 00:00 SAVE

Step	Action	Display
4.	Select the scalings for the signals by specifying the minimum and maximum display values. This has no effect if parameter *3404*/*3411*/*3418* is set to 9 (*DIRECT*). For details, see parameters *3406* and *3407*. Signal 1: parameters *3406 OUTPUT1 MIN* and *3407 OUTPUT1 MAX* Signal 2: parameters *3413 OUTPUT2 MIN* and *3414 OUTPUT2 MAX* Signal 3: parameters *3420 OUTPUT3 MIN* and *3421 OUTPUT3 MAX*.	LOC ↻PAR EDIT 3406 OUTPUT1 MIN 0.0 Hz CANCEL 00:00 SAVE LOC ↻PAR EDIT 3407 OUTPUT1 MAX 500.0 Hz CANCEL 00:00 SAVE

Assistants mode

When the drive is first powered up, the Start-up assistant guides you through the setup of the basic parameters. The Start-up assistant is divided into assistants, each of which is responsible for the specification of a related parameter set, for example Motor set-up or PID control. The Start-up assistant activates the assistants one after the other. You may also use the assistants independently. For more information on the tasks of the assistants, see section *Start-up assistant* on page *113*.

In the Assistants mode, you can:

- use assistants to guide you through the specification of a set of basic parameters
- start, stop, change the direction and switch between local and remote control.

How to use an assistant

The table below shows the basic operation sequence which leads you through assistants. The Motor set-up assistant is used as an example.

Step	Action	Display
1.	Go to the Main menu by pressing MENU if you are in the Output mode, otherwise by pressing repeatedly EXIT until you get to the Main menu.	LOC ↻MAIN MENU———1 PARAMETERS ASSISTANTS CHANGED PAR EXIT | 00:00 | ENTER
2.	Go to the Assistants mode by selecting ASSISTANTS on the menu keys ▲ and ▼, and pressing ENTER.	LOC ↻ASSISTANTS———1 Start-up assistant Motor Set-up Application Speed control EXT1 Speed control EXT2 EXIT | 00:00 | SEL
3.	Select the assistant keys ▲ and ▼, and press SEL. If you select any other assistant than the Start-up assistant, it guides you through the task of specification of its parameter set as shown in steps *4.* and *5.* below. After that you can select another assistant on the Assistants menu or exit the Assistants mode. The Motor set-up assistant is used here as an example. If you select the Start-up assistant, it activates the first assistant, which guides you through the task of specification of its parameter set as shown in steps *4.* and *5.* below. The Start-up assistant then asks if you want to continue with the next assistant or skip it – select the appropriate answer with keys ▲ and ▼, and press SEL. If you choose to skip, the Start-up assistant asks the same question about the next assistant, and so on.	LOC ↻PAR EDIT——— 9905 MOTOR NOM VOLT 200 V EXIT | 00:00 | SAVE LOC ↻CHOICE——— Do you want to continue with application setup? Continue Skip EXIT | 00:00 | OK

Step	Action	Display
4.	• To specify a new value, press keys ▲ and ▼. • To ask for information on the requested parameter, press key ?. Scroll the help text with keys ▲ and ▼. Close the help by pressing EXIT.	LOC ↻PAR EDIT 9905 MOTOR NOM VOLT 240 V EXIT 00:00 SAVE LOC ↻HELP Set as given on the motor nameplate. Voltage value must correspond to motor D/Y connection. EXIT 00:00
5.	• To accept the new value and continue to the setting of the next parameter, press SAVE. • To stop the assistant, press EXIT.	LOC ↻PAR EDIT 9906 MOTOR NOM CURR 1.2 A EXIT 00:00 SAVE

Changed parameters mode

In the Changed parameters mode, you can:

- view a list of all parameters that have been changed from the macro default values
- change these parameters
- start, stop, change the direction and switch between local and remote control.

How to view and edit changed parameters

Step	Action	Display
1.	Go to the Main menu by pressing MENU if you are in the Output mode, otherwise by pressing repeatedly EXIT until you get to the Main menu.	LOC MAIN MENU 1 PARAMETERS ASSISTANTS CHANGED PAR EXIT 00:00 ENTER
2.	Go to the Changed parameters mode by selecting CHANGED PAR on the menu with keys ▲ and ▼, and pressing ENTER.	LOC CHANGED PAR 1202 CONST SPEED 1 10.0 Hz 1203 CONST SPEED 2 1204 CONST SPEED 3 9902 APPLIC MACRO EXIT 00:00 EDIT
3.	Select the changed parameter on the list with keys ▲ and ▼. The value of the selected parameter is shown below it. Press EDIT to modify the value.	LOC PAR EDIT 1202 CONST SPEED 1 10.0 Hz CANCEL 00:00 SAVE
4.	Specify a new value for the parameter with keys ▲ and ▼. Pressing the key once increments or decrements the value. Holding the key down changes the value faster. Pressing the keys simultaneously replaces the displayed value with the default value.	LOC PAR EDIT 1202 CONST SPEED 1 15.0 Hz CANCEL 00:00 SAVE
5.	• To accept the new value, press SAVE. If the new value is the default value, the parameter is removed from the list of changed parameters. • To cancel the new value and keep the original, press CANCEL.	LOC CHANGED PAR 1202 CONST SPEED 1 15.0 Hz 1203 CONST SPEED 2 1204 CONST SPEED 3 9902 APPLIC MACRO EXIT 00:00 EDIT

Fault logger mode

In the Fault logger mode, you can:

- view the drive fault history of maximum ten faults (after a power off, only the three latest faults are kept in the memory)
- see the details of the three latest faults (after a power off, the details of only the most recent fault is kept in the memory)
- read the help text for the fault
- start, stop, change the direction and switch between local and remote control.

How to view faults

Step	Action	Display
1.	Go to the Main menu by pressing MENU if you are in the Output mode, otherwise by pressing repeatedly EXIT until you get to the Main menu.	LOC ↻MAIN MENU———1 PARAMETERS ASSISTANTS CHANGED PAR EXIT | 00:00 | ENTER
2.	Go to the Fault logger mode by selecting FAULT LOGGER on the menu with keys ▲ and ▼, and pressing ENTER. The display shows the fault log starting with the latest fault. The number on the row is the fault code according to which the causes and corrective actions are listed in chapter *Fault tracing* on page *301*.	LOC ↻FAULT LOGGER—1 10: PANEL LOSS 19.03.05 13:04:57 6: DC UNDERVOLT 7: AI1 LOSS EXIT | 00:00 | DETAIL
3.	To see the details of a fault, select it with keys ▲ and ▼, and press DETAIL.	LOC ↻PANEL LOSS——— FAULT 10 FAULT TIME 1 13:04:57 FAULT TIME 2 EXIT | 00:00 | DIAG
4.	To show the help text, press DIAG. Scroll the help text with keys ▲ and ▼. After reading the help, press OK to return to the previous display.	LOC ↻DIAGNOSTICS——— Check: comm lines and connections, parameter 3002, parameters in groups 10 and 11. EXIT | 00:00 | OK

Time and date mode

In the Time and date mode, you can:

- show or hide the clock
- change date and time display formats
- set the date and time
- enable or disable automatic clock transitions according to the daylight saving changes
- start, stop, change the direction and switch between local and remote control.

The Assistant control panel contains a battery to ensure the function of the clock when the panel is not powered by the drive.

How to show or hide the clock, change display formats, set the date and time and enable or disable clock transitions due to daylight saving changes

Step	Action	Display
1.	Go to the Main menu by pressing MENU if you are in the Output mode, otherwise by pressing repeatedly EXIT until you get to the Main menu.	LOC ↻MAIN MENU——1 PARAMETERS ASSISTANTS CHANGED PAR EXIT 00:00 ENTER
2.	Go to the Time and date mode by selecting TIME & DATE on the menu with keys ▲ and ▼, and pressing ENTER.	LOC ↻TIME & DATE——1 CLOCK VISIBILITY TIME FORMAT DATE FORMAT SET TIME SET DATE EXIT 00:00 SEL
3.	• To show (hide) the clock, select CLOCK VISIBLILITY on the menu, press SEL, select Show clock (Hide clock) and press SEL, or, if you want to return to the previous display without making changes, press EXIT. • To specify the date format, select DATE FORMAT on the menu, press SEL and select a suitable format. Press OK to save or CANCEL to cancel your changes. • To specify the time format, select TIME FORMAT on the menu, press SEL and select a suitable format. Press OK to save or CANCEL to cancel your changes.	LOC ↻CLOCK VISIB——1 Show clock Hide clock EXIT 00:00 SEL LOC ↻DATE FORMAT——1 dd.mm.yy mm/dd/yy dd.mm.yyyy mm/dd/yyyy CANCEL 00:00 OK LOC ↻TIME FORMAT——1 24-hour 12-hour CANCEL 00:00 SEL

Step	Action	Display
	• To set the time, select SET TIME on the menu and press SEL. Specify the hours with keys ▲ and ▼, and press OK. Then specify the minutes. Press OK to save or CANCEL to cancel your changes.	LOC ↻SET TIME 15:41 CANCEL 00:00 OK
	• To set the date, select SET DATE on the menu and press SEL. Specify the first part of the date (day or month depending on the selected date format) with keys ▲ and ▼, and press OK. Repeat for the second part. After specifying the year, press OK. To cancel your changes, press CANCEL.	LOC ↻SET DATE 19.03.05 CANCEL 00:00 OK
	• To enable or disable the automatic clock transitions according to the daylight saving changes, select DAYLIGHT SAVING on the menu and press SEL. Pressing ? opens the help that shows the beginning and end dates of the period during which daylight saving time is used in each country or area whose daylight saving changes you can select to be followed. • To disable automatic clock transitions according to the daylight saving changes, select Off and press SEL. • To enable automatic clock transitions, select the country or area whose daylight saving changes are followed and press SEL. • To return to the previous display without making changes, press EXIT.	LOC ↻DAYLIGHT SAV—1 Off EU US Australia1:NSW,Vict.. Australia2:Tasmania.. EXIT 00:00 SEL LOC ↻HELP EU: On: Mar last Sunday Off: Oct last Sunday US: EXIT 00:00

Parameter backup mode

The Parameter backup mode is used to export parameters from one drive to another or to make a backup of the drive parameters. Uploading to the panel stores all drive parameters, including up to two user sets, to the Assistant control panel. The full set, partial parameter set (application) and user sets can then be downloaded from the control panel to another drive or the same drive. Uploading and downloading can be performed in local control.

The control panel memory is non-volatile and does not depend on the panel battery.

In the Parameter backup mode, you can:

- Copy all parameters from the drive to the control panel (UPLOAD TO PANEL). This includes all defined user sets of parameters and internal (not adjustable by the user) parameters.
- View the information about the backup stored to the control panel with UPLOAD TO PANEL (BACKUP INFO). This includes eg the type and rating of the drive where the backup was made. It is useful to check this information when you are going to copy the parameters to another drive with DOWNLOAD FULL SET to ensure that the drives match.
- Restore the full parameter set from the control panel to the drive (DOWNLOAD FULL SET). This writes all parameters, including the internal non-user-adjustable motor parameters, to the drive. It does not include the user sets of parameters.

  Note: Only use this function to restore a drive from a backup or to transfer parameters to systems that are identical to the original system.
- Copy a partial parameter set (part of the full set) from the control panel to a drive (DOWNLOAD APPLICATION). The partial set does not include user sets, internal motor parameters, parameters *9905*…*9909*, *1605*, *1607*, *5201*, nor any group *53 EFB PROTOCOL* parameters.

  The source and target drives and their motor sizes do not need to be the same.
- Copy user set 1 parameters from the control panel to the drive (DOWNLOAD USER SET1). A user set includes group *99 START-UP DATA* parameters and the internal motor parameters.

  The function is only shown on the menu when User set 1 has been first saved using parameter *9902 APPLIC MACRO* (see section *user macros* on page *112*) and then uploaded to the control panel with UPLOAD TO PANEL.
- Copy user set 2 parameters from the control panel to the drive (DOWNLOAD USER SET2). As DOWNLOAD USER SET1 above.
- Start, stop, change the direction and switch between local and remote control.

How to upload and download parameters

For the upload and download functions available, see above. Note that the drive has to be in local control for uploading and downloading.

Step	Action	Display
1.	Go to the Main menu by pressing MENU if you are in the Output mode, otherwise by pressing repeatedly EXIT until you get to the Main menu. – If REM is shown on the status line, press LOC/REM to switch to local control.	LOC ↻MAIN MENU———1 PARAMETERS ASSISTANTS CHANGED PAR EXIT | 00:00 | ENTER
2.	Go to the Par backup mode by selecting PAR BACKUP on the menu with keys ▲ and ▼, and pressing ENTER.	LOC ↻PAR BACKUP———1 UPLOAD TO PANEL BACKUP INFO DOWNLOAD FULL SET DOWNLOAD APPLICATION DOWNLOAD USER SET1 EXIT | 00:00 | SEL
3.	• To copy all parameters (including user sets and internal parameters) from the drive to the control panel, select UPLOAD TO PANEL on the Par backup menu with keys ▲ and ▼, and press SEL. During the transfer, the display shows the degree of completion in percent. Press ABORT if you want to stop the operation. After the upload is completed, the display shows a message about the completion. Press OK to return to the Par backup menu. • To perform downloads, select the appropriate operation (here DOWNLOAD FULL SET is used as an example) on the Par backup menu with keys ▲ and ▼, and press SEL. The display shows the degree of completion in percent. Press ABORT if you want to stop the operation. After the download is completed, the display shows a message about the completion. Press OK to return to the Par backup menu.	LOC ↻PAR BACKUP——— Copying parameters 50% ABORT | 00:00 | LOC ↻MESSAGE——— Parameter upload successful OK | 00:00 | LOC ↻PAR BACKUP——— Downloading parameters (full set) 50% ABORT | 00:00 | LOC ↻MESSAGE——— Parameter download successfully completed. OK | 00:00 |

How to view information about the backup

Step	Action	Display
1.	Go to the Main menu by pressing MENU if you are in the Output mode, otherwise by pressing repeatedly EXIT until you get to the Main menu.	LOC ↻MAIN MENU———1 PARAMETERS ASSISTANTS CHANGED PAR EXIT | 00:00 | ENTER
2.	Go to the Par backup mode by selecting PAR BACKUP on the menu with keys ▲ and ▼, and pressing ENTER.	LOC ↻PAR BACKUP———1 UPLOAD TO PANEL BACKUP INFO DOWNLOAD FULL SET DOWNLOAD APPLICATION DOWNLOAD USER SET1 EXIT | 00:00 | SEL
3.	Select BACKUP INFO on the Par backup menu with keys ▲ and ▼, and press SEL. The display shows the following information about the drive where the backup was made: DRIVE TYPE: type of the drive *DRIVE RATING*: rating of the drive in format XXXYZ, where XXX: Nominal current rating. If present, an “A” indicates a decimal point, eg 9A7 means 9.7 A. Y: 2 = 200 V 4 = 400 V Z: i = European loading package n = US loading package *FIRMWARE*: firmware version of the drive. You can scroll the information with keys ▲ and ▼.	LOC ↻BACKUP INFO——— DRIVE TYPE ACS310 3304 DRIVE RATING 9A74i 3301 FIRMWARE EXIT | 00:00 | LOC ↻BACKUP INFO——— ACS310 3304 DRIVE RATING 9A74i 3301 FIRMWARE 241A hex EXIT | 00:00 |
4.	Press EXIT to return to the Par backup menu.	LOC ↻PAR BACKUP———1 UPLOAD TO PANEL BACKUP INFO DOWNLOAD FULL SET DOWNLOAD APPLICATION DOWNLOAD USER SET1 EXIT | 00:00 | SEL

IO settings mode

In the IO settings mode, you can:

- check the parameter settings related to any I/O terminal
- edit the parameter setting. For example, if “1103: REF1” is listed under Ain1 (Analog input 1), that is, parameter *1103 REF1 SELECT* has value *AI1*, you can change its value to eg *AI2*. You cannot, however, set the value of parameter *1106 REF2 SELECT* to *AI1*.
- start, stop, change the direction and switch between local and remote control.

How to edit and change parameter settings related to I/O terminals

Step	Action	Display
1.	Go to the Main menu by pressing MENU if you are in the Output mode, otherwise by pressing repeatedly EXIT until you get to the Main menu.	LOC ↻MAIN MENU———1 PARAMETERS ASSISTANTS CHANGED PAR EXIT | 00:00 | ENTER
2.	Go to the IO settings mode by selecting IO SETTINGS on the menu with keys ▲ and ▼, and pressing ENTER.	LOC ↻IO SETTINGS——1 DIGITAL INPUTS (DI) ANALOG INPUTS (AI) RELAY OUTPUTS (ROUT) ANALOG OUTPUTS (AOUT) PANEL EXIT | 00:00 | SEL
3.	Select the I/O group, eg DIGITAL INPUTS, with keys ▲ and ▼, and press SEL. After a brief pause, the display shows the current settings for the selection.	LOC ↻IO SETTINGS——— -DI1- 1001:START/STOP (E1) -DI2- 1001:DIR (E1) -DI3- EXIT | 00:00 |
4.	Select the setting (line with a parameter number) with keys ▲ and ▼, and press EDIT.	LOC ↻PAR EDIT——— 1001 EXT1 COMMANDS DI1,2 [2] CANCEL | 00:00 | SAVE
5.	Specify a new value for the setting with keys ▲ and ▼. Pressing the key once increments or decrements the value. Holding the key down changes the value faster. Pressing the keys simultaneously replaces the displayed value with the default value.	LOC ↻PAR EDIT——— 1001 EXT1 COMMANDS DI1P,2P [3] CANCEL | 00:00 | SAVE
6.	• To save the new value, press SAVE. • To cancel the new value and keep the original, press CANCEL.	LOC ↻IO SETTINGS——— -DI1- 1001:START PLS (E1) -DI2- 1001:STOP PLS (E1) -DI3- EXIT | 00:00 |

10

Application macros

What this chapter contains

The chapter describes the application macros. For each macro, there is a wiring diagram showing the default control connections (digital and analog I/O). The chapter also explains how to save a user macro and how to recall it.

Overview of macros

Application macros are pre-programmed parameter sets. While starting up the drive, the user typically selects one of the macros - the one that is best suited for the purpose - with parameter *9902 APPLIC MACRO*, makes the essential changes and saves the result as a user macro.

The ACS310 has eight standard macros and two user macros. The table below contains a summary of the macros and describes suitable applications.

Macro	Suitable applications
ABB standard	Ordinary speed control applications where no, one, two or three constant speeds are used. Start/stop is controlled with one digital input (level start and stop). It is possible to switch between two acceleration and deceleration times.
3-wire	Ordinary speed control applications where no, one, two or three constant speeds are used. The drive is started and stopped with push buttons.
Alternate	Speed control applications where no, one, two or three constant speeds are used. Start, stop and direction are controlled by two digital inputs (combination of the input states determines the operation).
Motor potentiometer	Speed control applications where no or one constant speed is used. The speed is controlled by two digital inputs (increase / decrease / keep unchanged).
Hand/Auto	Speed control applications where switching between two control devices is needed. Some control signal terminals are reserved for one device, the rest for the other. One digital input selects between the terminals (devices) in use.

Macro	Suitable applications
PID control	Process control applications, for example different closed loop control systems such as pressure control, level control and flow control. It is possible to switch between process and speed control: Some control signal terminals are reserved for process control, others for speed control. One digital input selects between process and speed control.
PFC control	Pump alternation applications, for example booster stations in buildings. The pressure in the network is adjusted by changing the speed of the pump according to the signal received from the pressure transducer and adding auxiliary pumps directly on-line when needed.
SPFC control	Soft PFC control for pump alternation applications where lower pressure peaks are desirable when a new auxiliary motor is started.
User	The user can save the customized standard macro, ie the parameter settings including group *99 START-UP DATA* into the permanent memory, and recall the data at a later time. For example, two user macros can be used when switching between two different motors is required.

Summary of the I/O connections of the application macros

The following table gives the summary of the default I/O connections of all application macros.

Input/ output	**Macro**						
	ABB standard	**3-wire**	**Alternate**	**Motor potentiom.**	**Hand/Auto**	**PID control**	**PFC control, SPFC control**
AI1 (0…10 V)	Freq. ref.	Freq. ref.	Freq. ref.	-	Freq. ref. (Hand)	Freq. ref. (Hand) / Proc. ref. (PID)	Ext. ref. 1 (Hand) / Ext. ref. 2 (PID/PFC)
AI2 (0…20 mA)	-	-	-	-	Freq. ref. (Auto)	Process value	Process value
AO	Output freq.	Output freq.	Output freq.	Output freq.	Output freq.	Output freq.	Output freq.
DI1	Stop/Start	Start (pulse)	Start (fwd)	Stop/Start	Stop/Start (Hand)	Stop/Start (Hand)	Stop/Start (Hand)
DI2	Fwd/Rev	Stop (pulse)	Start (rev)	Fwd/Rev	Fwd/Rev (Hand)	Hand/PID	Hand/ PID,PFC
DI3	Const. speed input 1	Fwd/Rev	Const. speed input 1	Freq. ref. up	Hand/Auto	Const. speed 1	Interlock
DI4	Const. speed input 2	Const. speed input 1	Const. speed input 2	Freq. ref. down	Fwd/Rev (Auto)	Run enable	Interlock
DI5	Ramp pair selection	Const. speed input 2	Ramp pair selection	Const. speed 1	Stop/Start (Auto)	Stop/Start (PID)	Stop/Start (PID/PFC)
RO	Fault (-1)	Fault (-1)	Fault (-1)	Fault (-1)	Fault (-1)	Fault (-1)	PFC
DO	Fault (-1)	Fault (-1)	Fault (-1)	Fault (-1)	Fault (-1)	Fault (-1)	PFC control: Fault (-1) SPFC control: PFC

ABB standard macro

This is the default macro. It provides a general purpose I/O configuration with three constant speeds. Parameter values are the default values given in section *All parameters* on page *171*.

If you use other than the default connections presented below, see section *I/O terminals* on page *49*.

Default I/O connections

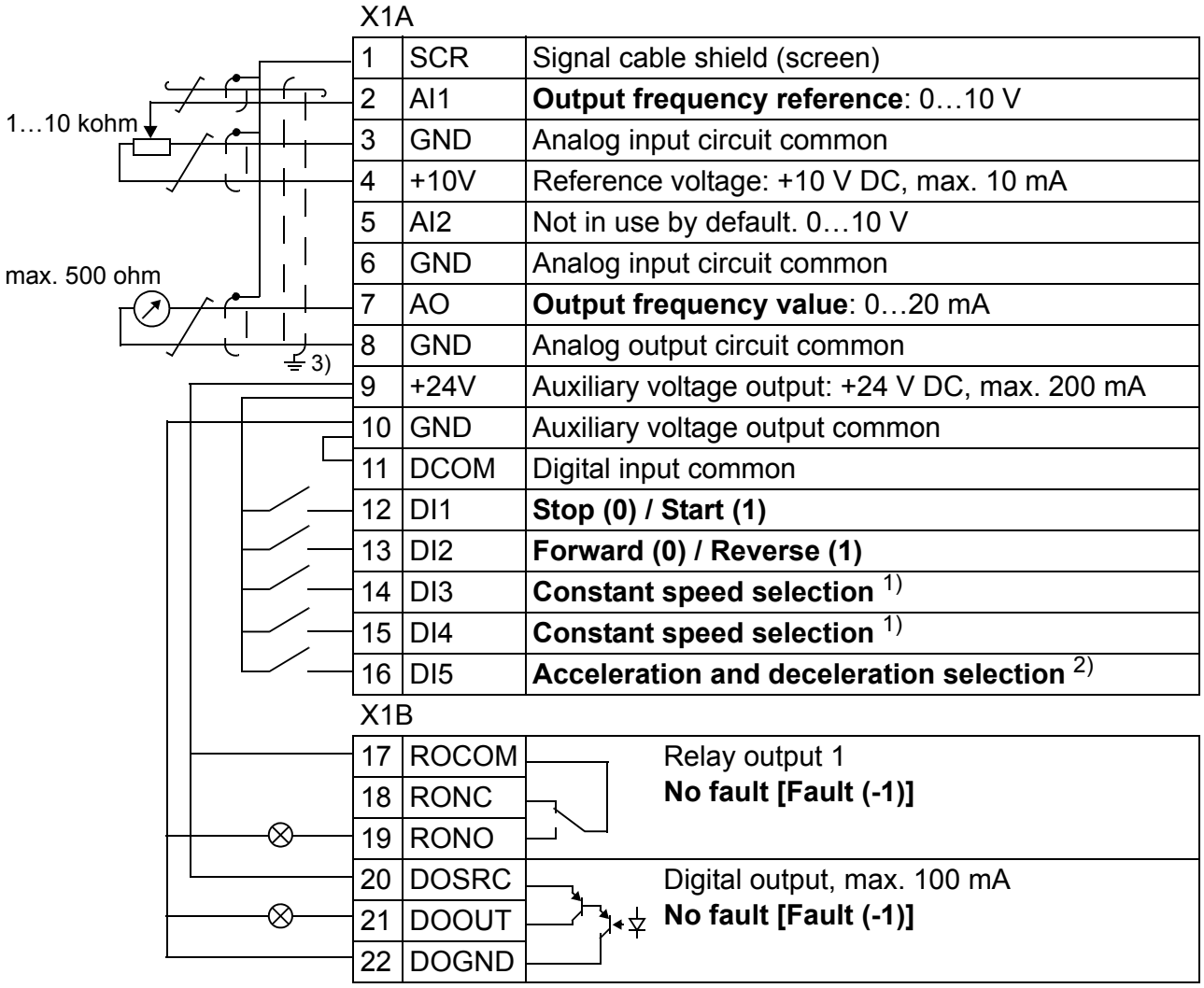

1	SCR	Signal cable shield (screen)
2	AI1	**Output frequency reference**: 0…10 V
3	GND	Analog input circuit common
4	+10V	Reference voltage: +10 V DC, max. 10 mA
5	AI2	Not in use by default. 0…10 V
6	GND	Analog input circuit common
7	AO	**Output frequency value**: 0…20 mA
8	GND	Analog output circuit common
9	+24V	Auxiliary voltage output: +24 V DC, max. 200 mA
10	GND	Auxiliary voltage output common
11	DCOM	Digital input common
12	DI1	**Stop (0) / Start (1)**
13	DI2	**Forward (0) / Reverse (1)**
14	DI3	**Constant speed selection** [1]
15	DI4	**Constant speed selection** [1]
16	DI5	**Acceleration and deceleration selection** [2]

17	ROCOM	Relay output 1 **No fault [Fault (-1)]**
18	RONC	
19	RONO	
20	DOSRC	Digital output, max. 100 mA **No fault [Fault (-1)]**
21	DOOUT	
22	DOGND	

[1] See parameter group *12 CONSTANT SPEEDS*:

DI3	DI4	Operation (parameter)
0	0	Set speed through AI1
1	0	Speed 1 (*1202 CONST SPEED 1*)
0	1	Speed 2 (*1203 CONST SPEED 2*)
1	1	Speed 3 (*1204 CONST SPEED 3*)

[2] 0 = ramp times according to parameters *2202* and *2203*.
1 = ramp times according to parameters *2205* and *2206*.

[3] 360 degree grounding under a clamp.

Tightening torque: 0.4 N·m (3.5 lbf·in).

3-wire macro

This macro is used when the drive is controlled using momentary push-buttons. It provides three constant speeds. To enable the macro, set the value of parameter *9902 APPLIC MACRO* to 2 (*3-WIRE*).

For the parameter default values, see section *Default values with different macros* on page *161*. If you use other than the default connections presented below, see section *I/O terminals* on page *49*.

Note: When the stop input (DI2) is deactivated (no input), the control panel start and stop buttons are disabled.

Default I/O connections

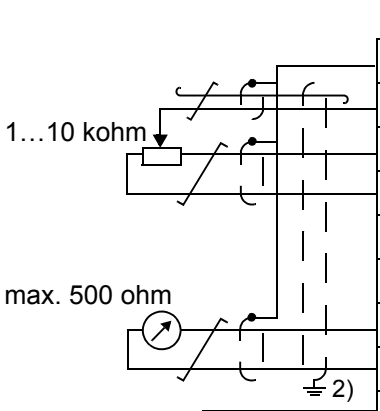

X1A

1	SCR	Signal cable shield (screen)
2	AI1	**Output frequency reference**: 0…10 V
3	GND	Analog input circuit common
4	+10V	Reference voltage: +10 V DC, max. 10 mA
5	AI2	Not in use by default. 0…10 V
6	GND	Analog input circuit common
7	AO	**Output frequency value**: 0…20 mA
8	GND	Analog output circuit common
9	+24V	Auxiliary voltage output: +24 V DC, max. 200 mA
10	GND	Auxiliary voltage output common
11	DCOM	Digital input common
12	DI1	**Start (pulse ⎍)**
13	DI2	**Stop (pulse ⎍)**
14	DI3	**Forward (0) / Reverse (1)**
15	DI4	**Constant speed selection** [1]
16	DI5	**Constant speed selection** [1]

X1B

17	ROCOM	Relay output 1 **No fault [Fault (-1)]**
18	RONC	
19	RONO	
20	DOSRC	Digital output, max. 100 mA **No fault [Fault (-1)]**
21	DOOUT	
22	DOGND	

[1] See parameter group *12 CONSTANT SPEEDS*:

DI3	DI4	Operation (parameter)
0	0	Set speed through AI1
1	0	Speed 1 (*1202 CONST SPEED 1*)
0	1	Speed 2 (*1203 CONST SPEED 2*)
1	1	Speed 3 (*1204 CONST SPEED 3*)

[2] 360 degree grounding under a clamp.

Tightening torque: 0.4 N·m (3.5 lbf·in).

Alternate macro

This macro provides an I/O configuration adapted to a sequence of DI control signals used when alternating the rotation direction of the motor. To enable the macro, set the value of parameter *9902 APPLIC MACRO* to 3 (*ALTERNATE*).

For the parameter default values, see section *Default values with different macros* on page *161*. If you use other than the default connections presented below, see section *I/O terminals* on page *49*.

Default I/O connections

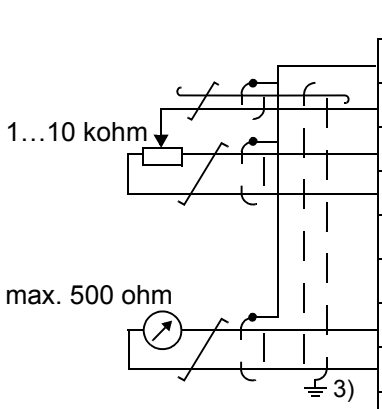

X1A

1	SCR	Signal cable shield (screen)
2	AI1	**Output frequency reference**: 0…10 V
3	GND	Analog input circuit common
4	+10V	Reference voltage: +10 V DC, max. 10 mA
5	AI2	Not in use by default. 0…10 V
6	GND	Analog input circuit common
7	AO	**Output frequency value**: 0…20 mA
8	GND	Analog output circuit common
9	+24V	Auxiliary voltage output: +24 V DC, max. 200 mA
10	GND	Auxiliary voltage output common
11	DCOM	Digital input common
12	DI1	**Start forward**: If DI1 = DI2, the drive stops.
13	DI2	**Start reverse**
14	DI3	**Constant speed selection** [1]
15	DI4	**Constant speed selection** [1]
16	DI5	**Acceleration and deceleration selection** [2]

X1B

17	ROCOM	Relay output 1 **No fault [Fault (-1)]**
18	RONC	
19	RONO	
20	DOSRC	Digital output, max. 100 mA **No fault [Fault (-1)]**
21	DOOUT	
22	DOGND	

[1] See parameter group *12 CONSTANT SPEEDS*:

DI3	DI4	Operation (parameter)
0	0	Set speed through AI1
1	0	Speed 1 (*1202 CONST SPEED 1*)
0	1	Speed 2 (*1203 CONST SPEED 2*)
1	1	Speed 3 (*1204 CONST SPEED 3*)

[2] 0 = ramp times according to parameters *2202* and *2203*.
1 = ramp times according to parameters *2205* and *2206*.

[3] 360 degree grounding under a clamp.

Tightening torque: 0.4 N·m (3.5 lbf·in).

Motor potentiometer macro

This macro provides a cost-effective interface for PLCs that vary the speed (output frequency) of the motor using only digital signals. To enable the macro, set the value of parameter *9902 APPLIC MACRO* to 4 (*MOTOR POT*).

For the parameter default values, see section *Default values with different macros* on page *161*. If you use other than the default connections presented below, see section *I/O terminals* on page *49*.

Default I/O connections

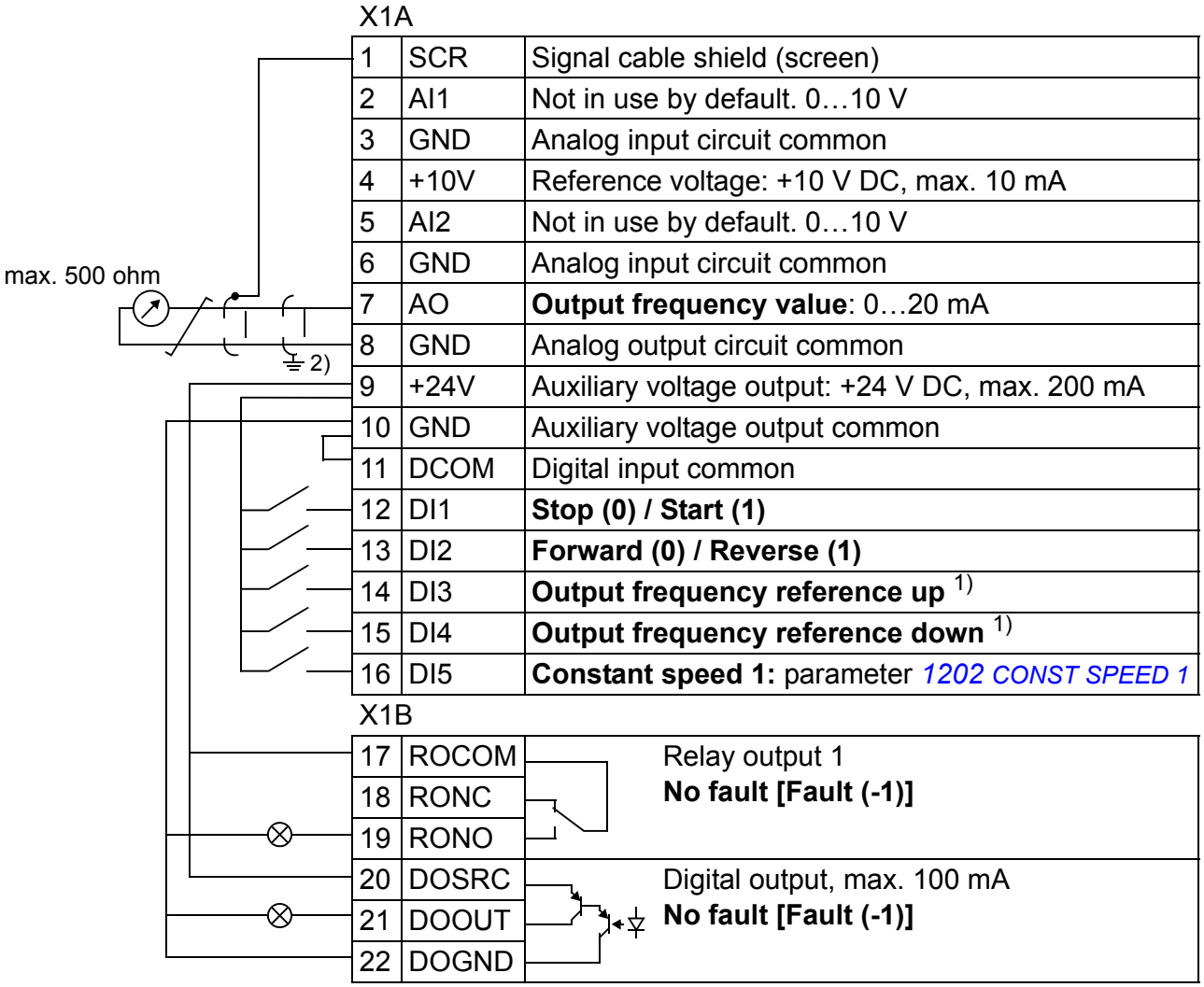

X1A

1	SCR	Signal cable shield (screen)
2	AI1	Not in use by default. 0…10 V
3	GND	Analog input circuit common
4	+10V	Reference voltage: +10 V DC, max. 10 mA
5	AI2	Not in use by default. 0…10 V
6	GND	Analog input circuit common
7	AO	**Output frequency value**: 0…20 mA
8	GND	Analog output circuit common
9	+24V	Auxiliary voltage output: +24 V DC, max. 200 mA
10	GND	Auxiliary voltage output common
11	DCOM	Digital input common
12	DI1	**Stop (0) / Start (1)**
13	DI2	**Forward (0) / Reverse (1)**
14	DI3	**Output frequency reference up** [1]
15	DI4	**Output frequency reference down** [1]
16	DI5	**Constant speed 1:** parameter *1202 CONST SPEED 1*

X1B

17	ROCOM	Relay output 1
18	RONC	**No fault [Fault (-1)]**
19	RONO	
20	DOSRC	Digital output, max. 100 mA
21	DOOUT	**No fault [Fault (-1)]**
22	DOGND	

[1] If DI3 and DI4 are both active or inactive, the output frequency reference is unchanged.

The existing output frequency reference is stored during stop and power down.

[2] 360 degree grounding under a clamp.

Tightening torque: 0.4 N·m (3.5 lbf·in).

Hand/Auto macro

This macro can be used when switching between two external control devices is needed. To enable the macro, set the value of parameter *9902 APPLIC MACRO* to 5 (*HAND/AUTO*).

For the parameter default values, see section *Default values with different macros* on page *161*. If you use other than the default connections presented below, see section *I/O terminals* on page *49*.

Note: Parameter *2108 START INHIBIT* must remain in the default setting 0 (*OFF*).

Default I/O connections

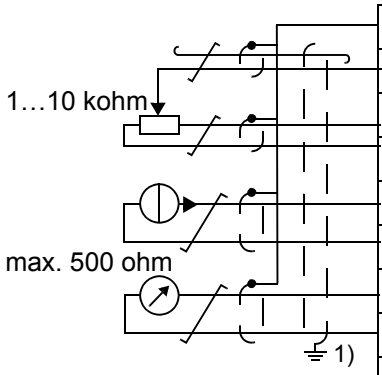

X1A

1	SCR	Signal cable shield (screen)
2	AI1	**Output frequency reference (Hand)**: 0…10 V
3	GND	Analog input circuit common
4	+10V	Reference voltage: +10 V DC, max. 10 mA
5	AI2	**Output frequency reference (Auto)**: 0…20 mA [2]
6	GND	Analog input circuit common
7	AO	**Output frequency value**: 0…20 mA
8	GND	Analog output circuit common
9	+24V	Auxiliary voltage output: +24 V DC, max. 200 mA
10	GND	Auxiliary voltage output common
11	DCOM	Digital input common
12	DI1	**Stop (0) / Start (1) (Hand)**
13	DI2	**Forward (0) / Reverse (1) (Hand)**
14	DI3	**Hand (0) / Auto (1) control selection**
15	DI4	**Forward (0) / Reverse (1) (Auto)**
16	DI5	**Stop (0) / Start (1) (Auto)**

X1B

17	ROCOM	Relay output 1 **No fault [Fault (-1)]**
18	RONC	
19	RONO	
20	DOSRC	Digital output, max. 100 mA **No fault [Fault (-1)]**
21	DOOUT	
22	DOGND	

[1] 360 degree grounding under a clamp.

[2] The signal source must be powered externally. See the manufacturer's instructions. An example of a connection using a two-wire sensor is given on page *51*.

Tightening torque: 0.4 N·m (3.5 lbf·in).

PID control macro

This macro provides parameter settings for closed-loop control systems such as pressure control, flow control, etc. Control can also be switched to speed control using a digital input. To enable the macro, set the value of parameter *9902 APPLIC MACRO* to 6 (*PID CONTROL*).

For the parameter default values, see section *Default values with different macros* on page *161*. If you use other than the default connections presented below, see section *I/O terminals* on page *49*.

Note: Parameter *2108 START INHIBIT* must remain in the default setting 0 (*OFF*).

Default I/O connections

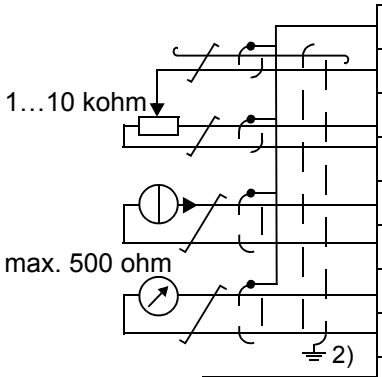

X1A

1	SCR	Signal cable shield (screen)
2	AI1	**Output freq. ref. (Hand) / Process ref. (PID)**: 0…10 V [1)]
3	GND	Analog input circuit common
4	+10V	Reference voltage: +10 V DC, max. 10 mA
5	AI2	**Process actual value**: 4…20 mA [3)]
6	GND	Analog input circuit common
7	AO	**Output frequency value**: 0…20 mA
8	GND	Analog output circuit common
9	+24V	Auxiliary voltage output: +24 V DC, max. 200 mA
10	GND	Auxiliary voltage output common
11	DCOM	Digital input common
12	DI1	**Stop (0) / Start (1) (Hand)**
13	DI2	**Hand (0) / PID (1) control selection)**
14	DI3	**Constant speed 1**: parameter *1202 CONST SPEED 1*
15	DI4	**Run enable**
16	DI5	**Stop (0) / Start (1) (PID)**

X1B

17	ROCOM	Relay output 1 **No fault [Fault (-1)]**
18	RONC	
19	RONO	
20	DOSRC	Digital output, max. 100 mA **No fault [Fault (-1)]**
21	DOOUT	
22	DOGND	

[1)] Hand: 0…10 V -> output freq. reference.
PID: 0…10 V -> 0…100% PID setpoint.

[2)] 360 degree grounding under a clamp.

[3)] The signal source must be powered externally. See the manufacturer's instructions. An example of a connection using a two-wire sensor is given on page *51*.

Tightening torque: 0.4 N·m (3.5 lbf·in).

PFC control macro

This macro provides parameter settings for pump and fan control (PFC) applications. To enable the macro, set the value of parameter *9902 APPLIC MACRO* to 7 (*PFC CONTROL*).

For the parameter default values, see section *Default values with different macros* on page *161*. If you use other than the default connections presented below, see section *I/O terminals* on page *49*.

Note: Parameter *2108 START INHIBIT* must remain in the default setting 0 (*OFF*).

Default I/O connections

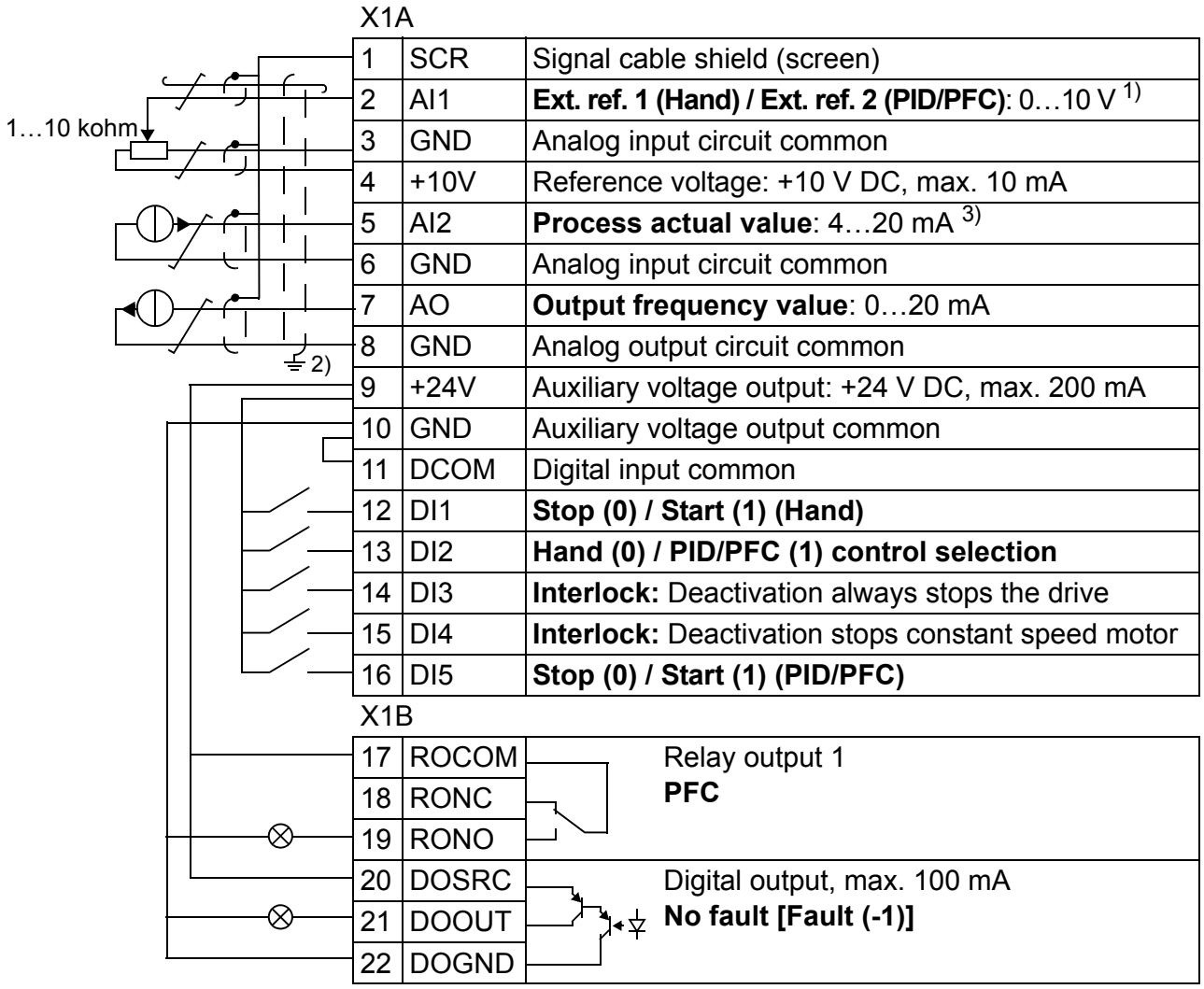

1	SCR	Signal cable shield (screen)
2	AI1	**Ext. ref. 1 (Hand) / Ext. ref. 2 (PID/PFC)**: 0…10 V [1]
3	GND	Analog input circuit common
4	+10V	Reference voltage: +10 V DC, max. 10 mA
5	AI2	**Process actual value**: 4…20 mA [3]
6	GND	Analog input circuit common
7	AO	**Output frequency value**: 0…20 mA
8	GND	Analog output circuit common
9	+24V	Auxiliary voltage output: +24 V DC, max. 200 mA
10	GND	Auxiliary voltage output common
11	DCOM	Digital input common
12	DI1	**Stop (0) / Start (1) (Hand)**
13	DI2	**Hand (0) / PID/PFC (1) control selection**
14	DI3	**Interlock:** Deactivation always stops the drive
15	DI4	**Interlock:** Deactivation stops constant speed motor
16	DI5	**Stop (0) / Start (1) (PID/PFC)**

17	ROCOM	Relay output 1 **PFC**
18	RONC	
19	RONO	
20	DOSRC	Digital output, max. 100 mA **No fault [Fault (-1)]**
21	DOOUT	
22	DOGND	

[1] Hand: 0…10 V -> 0…50 Hz.
PID/PFC: 0…10 V -> 0…100% PID setpoint.

[2] 360 degree grounding under a clamp.

[3] The signal source must be powered externally. See the manufacturer's instructions. An example of a connection using a two-wire sensor is given on page *51*.

Tightening torque: 0.4 N·m (3.5 lbf·in).

SPFC control macro

This macro provides parameter settings for pump and fan control (SPFC) applications with a soft start function. To enable the macro, set the value of parameter *9902 APPLIC MACRO* to 15 (*SPFC CONTROL*).

For the parameter default values, see section *Default values with different macros* on page *161*. If you use other than the default connections presented below, see section *I/O terminals* on page *49*.

Note: Parameter *2108 START INHIBIT* must remain in the default setting 0 (*OFF*).

Default I/O connections

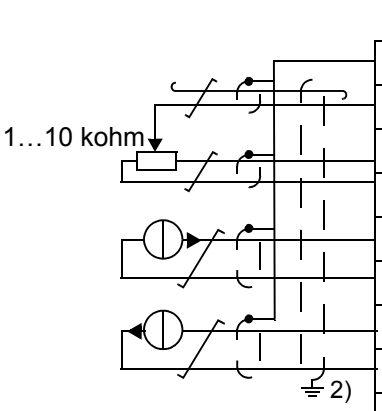

X1A

1	SCR	Signal cable shield (screen)
2	AI1	**Ext. ref. 1 (Hand) / Ext. ref. 2 (PID/PFC)**: 0…10 V [1)]
3	GND	Analog input circuit common
4	+10V	Reference voltage: +10 V DC, max. 10 mA
5	AI2	**Process actual value**: 4…20 mA [3)]
6	GND	Analog input circuit common
7	AO	**Output frequency value**: 0…20 mA
8	GND	Analog output circuit common
9	+24V	Auxiliary voltage output: +24 V DC, max. 200 mA
10	GND	Auxiliary voltage output common
11	DCOM	Digital input common
12	DI1	**Stop (0) / Start (1) (Hand)**
13	DI2	**Hand (0) / PID/PFC (1) control selection**
14	DI3	**Interlock:** Deactivation always stops the drive
15	DI4	**Interlock:** Deactivation stops constant speed motor
16	DI5	**Stop (0) / Start (1) (PID/PFC)**

X1B

17	ROCOM	Relay output 1 **PFC**
18	RONC	
19	RONO	
20	DOSRC	Digital output, max. 100 mA **PFC**
21	DOOUT	
22	DOGND	

[1)] Hand: 0…10 V -> 0…50 Hz.
PID/PFC: 0…10 V -> 0…100% PID setpoint.

[2)] 360 degree grounding under a clamp.

[3)] The signal source must be powered externally. See the manufacturer's instructions. An example of a connection using a two-wire sensor is given on page *51*.

Tightening torque: 0.4 N·m (3.5 lbf·in).

User macros

In addition to the standard application macros, it is possible to create two user macros. The user macro allows the user to save the parameter settings, including group *99 START-UP DATA*, into the permanent memory and recall the data at a later time. The panel reference is also saved if the macro is saved and loaded in local control. The remote control setting is saved into the user macro, but the local control setting is not.

The steps below show how to create and recall User macro 1. The procedure for the User macro 2 is identical, only the parameter *9902* values are different.

To create User macro 1:

- Adjust the parameters.
- Save the parameter settings to the permanent memory by changing parameter *9902* to -1 (*USER S1 SAVE*).
- Press SAVE (Assistant control panel) or MENU ENTER (Basic control panel) to save.

To recall User macro 1:

- Change parameter *9902* to 0 (*USER S1 LOAD*).
- Press SAVE (Assistant control panel) or MENU ENTER (Basic control panel) to load.

The user macro can also be switched through digital inputs (see parameter *1605*).

Note: User macro load restores the parameter settings, including group *99 START-UP DATA*. Check that the settings correspond to the motor used.

Hint: The user can for example switch the drive between two motors without having to adjust the motor parameters every time the motor is changed. The user needs only to adjust the settings once for each motor and then to save the data as two user macros. When the motor is changed, only the corresponding user macro needs to be loaded, and the drive is ready to operate.

11

Program features

What this chapter contains

The chapter describes program features. For each feature, there is a list of related user settings, actual signals, and fault and alarm messages.

Start-up assistant

Introduction

The Start-up assistant (requires the Assistant control panel) guides the user through the start-up procedure, helping to enter the requested data (parameter values) to the drive. The Start-up assistant also checks that the entered values are valid, ie within the allowed range.

The Start-up assistant calls other assistants, each of which guides the user through the task of specifying a related parameter set. At the first start, the drive suggests entering the first task, Language select, automatically. The user may activate the tasks either one after the other as the Start-up assistant suggests, or independently. The user may also adjust the drive parameters in the conventional way without using the assistant at all.

See section *Assistants mode* on page *91* for how to start the Start-up assistant or other assistants.

Default order of the tasks

Depending on the selection made in the Application task (parameter *9902 APPLIC MACRO*), the Start-up assistant decides which consequent tasks it suggests. The default tasks are shown in the table below.

Application selection	Default tasks
ABB STANDARD	Language select, Motor set-up, Application, Option modules, Speed control EXT1, Speed control EXT2, Start/Stop control, Timed functions, Protections, Output signals
3-WIRE	Language select, Motor set-up, Application, Option modules, Speed control EXT1, Speed control EXT2, Start/Stop control, Timed functions, Protections, Output signals
ALTERNATE	Language select, Motor set-up, Application, Option modules, Speed control EXT1, Speed control EXT2, Start/Stop control, Timed functions, Protections, Output signals
MOTOR POT	Language select, Motor set-up, Application, Option modules, Speed control EXT1, Speed control EXT2, Start/Stop control, Timed functions, Protections, Output signals
HAND/AUTO	Language select, Motor set-up, Application, Option modules, Speed control EXT1, Speed control EXT2, Start/Stop control, Timed functions, Protections, Output signals
PID CONTROL	Language select, Motor set-up, Application, Option modules, PID control, Speed control EXT2, Start/Stop control, Timed functions, Protections, Output signals
PFC CONTROL	Language select, Motor set-up, Application, Option modules, Speed control EXT1, Speed control EXT2, Start/Stop control, Timed functions, Protections, Output signals
SPFC CONTROL	Language select, Motor set-up, Application, Option modules, Speed control EXT1, Speed control EXT2, Start/Stop control, Timed functions, Protections, Output signals

List of the tasks and the relevant drive parameters

Depending on the selection made in the Application task (parameter *9902 APPLIC MACRO*), the Start-up assistant decides which consequent tasks it suggests.

Name	Description	Set parameters
Language select	Selecting the language	*9901*
Motor set-up	Setting the motor data	*9905*…*9909*
Application	Selecting the application macro	*9902*, parameters associated to the macro
Option modules	Activating the option modules	Group *35 MOTOR TEMP MEAS*, group *52 PANEL COMM* *9802*
Speed control EXT1	Selecting the source for the speed (output frequency) reference	*1103*
	(If AI1 is used: Setting analog input AI1 limits, scale, inversion)	(*1301*…*1303*, *3001*)
	Setting the reference limits	*1104*, *1105*
	Setting the frequency limits	*2007*, *2008*
	Setting the acceleration and deceleration times	*2202*, *2203*
Speed control EXT2	Selecting the source for the speed (output frequency) reference	*1106*
	(If AI1 is used: Setting analog input AI1 limits, scale, inversion)	(*1301*…*1303*, *3001*)
	Setting the reference limits	*1107*, *1108*
PID control	Selecting the source for the process reference	*1106*
	(If AI1 is used: Setting analog input AI1 limits, scale, inversion)	(*1301*…*1303*, *3001*)
	Setting the reference limits	*1107*, *1108*
	Setting the speed (reference) limits	*2007*, *2008*
	Setting the source and limits for the process actual value	*4016*, *4018*, *4019*
Start/Stop control	Selecting the source for start and stop signals of the two external control locations, EXT1 and EXT2	*1001*, *1002*
	Selecting between EXT1 and EXT2	*1102*
	Defining the direction control	*1003*
	Defining the start and stop modes	*2101*…*2103*
	Selecting the use of Run Enable signal	*1601*
Protections	Setting the current limits	*2003*

Name	Description	Set parameters
Output signals	Output signals Selecting the signals indicated through relay output RO1 and, if the MREL relay output extension module is in use, RO2…RO4.	Group *14 RELAY OUTPUTS*
	Selecting the signals indicated through analog output AO	Group *15 ANALOG OUTPUTS*
	Setting the minimum, maximum, scaling and inversion	
Timed functions	Setting the timed functions	Group *36 TIMED FUNCTIONS*
	Selecting the timed start/stop control for external control locations EXT1 and EXT2	*1001*, *1002*
	Selecting timed EXT1/EXT2 control	*1102*
	Activation of timed constant speed 1	*1201*
	Selecting timed function status indicated through relay output RO1 or, if the MREL relay output extension module is in use, RO2…RO4	*1401*…*1403*, *1410*
	Selecting timed PID1 parameter set 1/2 control	*4027*
	Selection between different internal (constant) set points for the process PID control (PID1 parameter set 1)	*4039*
	Selection between different internal (constant) set points for the process PID control (PID1 parameter set 2)	*4139*
	Selecting timed Autochange control	*8126*

Contents of the assistant displays

There are two types of displays in the Start-up assistant: Main displays and information displays. The main displays prompt the user to feed in information. The assistant steps through the main displays. The information displays contain help texts for the main displays. The figure below shows a typical example of both and explanations of the contents.

Main display **Information display**

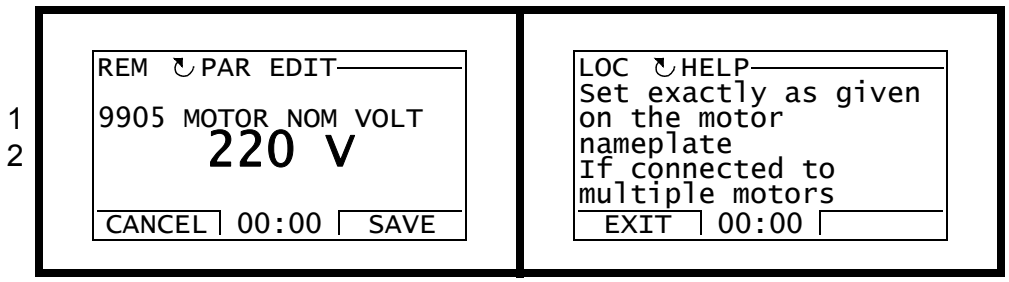

1	Parameter	Help text …
2	Feed-in field	… help text continued

Local control vs. external control

The drive can receive start, stop and direction commands and reference values from the control panel or through digital and analog inputs. Embedded fieldbus enables control over an open fieldbus link. A PC equipped with the DriveWindow Light PC tool can also control the drive.

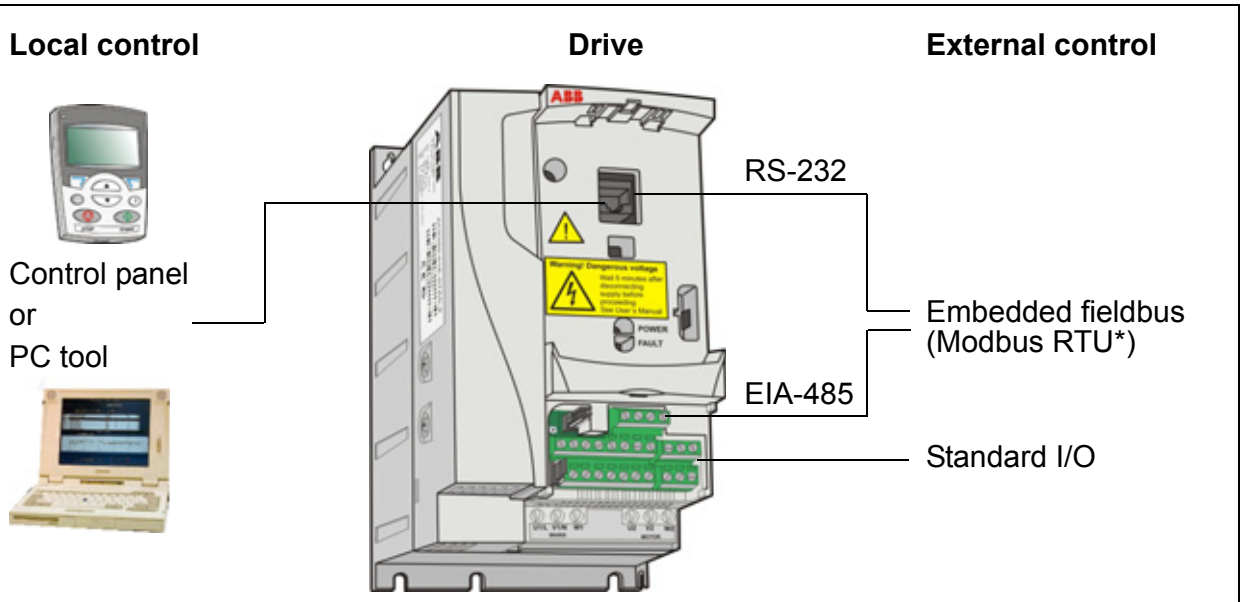

* With SREA Ethernet adapter module it is possible to use Modbus TCP/IP with the Ethernet. For more information, see *SREA-01 Ethernet adapter module user's manual* (3AUA0000042896 [English]).

Local control

The control commands are given from the control panel keypad when the drive is in local control. LOC indicates local control on the panel display.

Assistant control panel **Basic control panel**

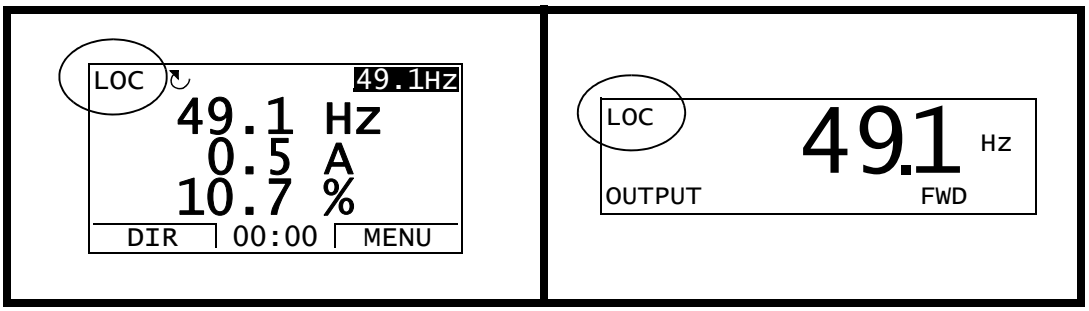

The control panel always overrides the external control signal sources when used in local control.

External control

When the drive is in external (remote) control, the commands are given through the standard I/O terminals (digital and analog inputs) and/or the fieldbus interface. In addition, it is also possible to set the control panel as the source for the external control.

External control is indicated with REM on the panel display.

Assistant control panel **Basic control panel**

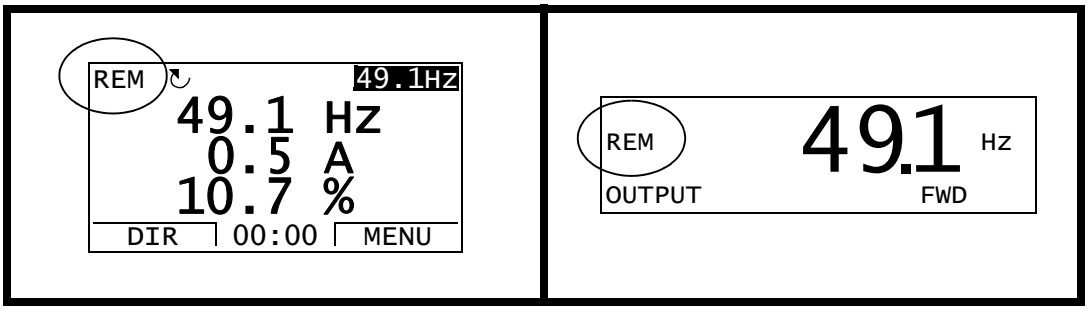

The user can connect the control signals to two external control locations, *EXT1* or *EXT2*. Depending on the user selection, either one is active at a time. This function operates on a 2 ms time level.

Settings

Panel key	**Additional information**
LOC/REM	Selection between local and external (remote) control
Parameter	
1102	Selection between *EXT1* and *EXT2*
1001/*1002*	Start, stop, direction source for *EXT1*/*EXT2*
1103/*1106*	Reference source for *EXT1*/*EXT2*

Diagnostics

Actual signals	Additional information
0111/*0112*	*EXT1*/*EXT2* reference

Block diagram: Start, stop, direction source for *EXT1*

The figure below shows the parameters that select the interface for start, stop, and direction for external control location *EXT1*.

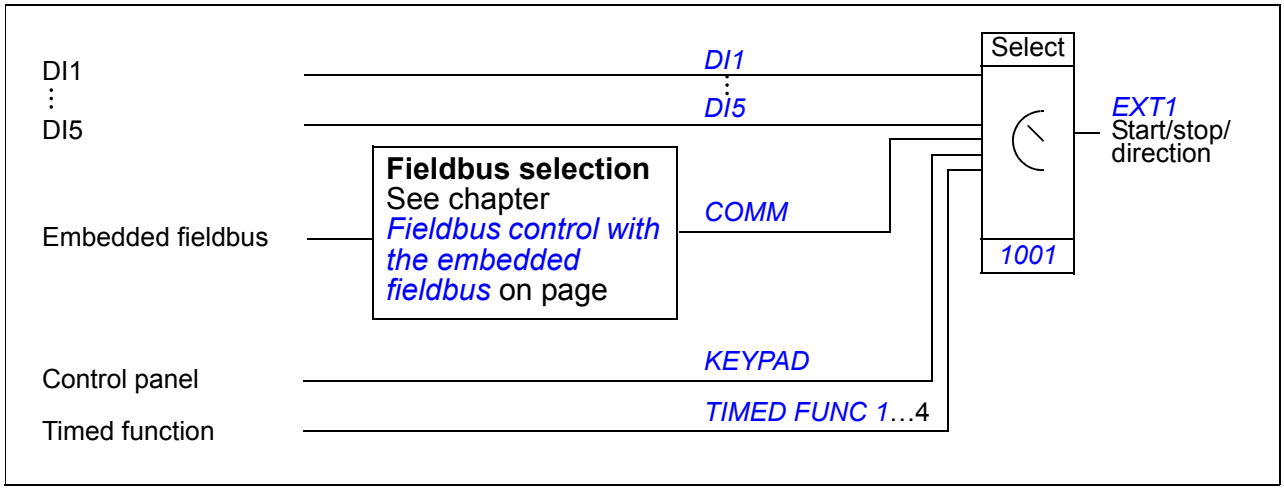

Block diagram: Reference source for *EXT1*

The figure below shows the parameters that select the interface for the speed reference of external control location *EXT1*.

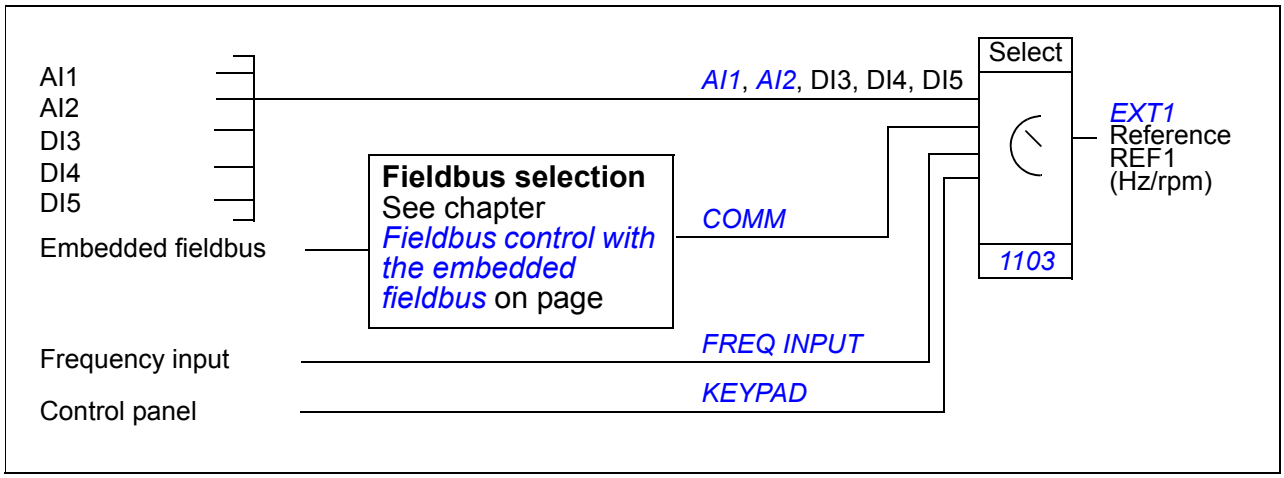

Reference types and processing

The drive can accept a variety of references in addition to the conventional analog input and control panel signals.

- The drive reference can be given with two digital inputs: One digital input increases the speed, the other decreases it.
- The drive can form a reference out of two analog input signals by using mathematical functions: addition, subtraction, multiplication and division.
- The drive can form a reference out of an analog input signal and a signal received through a serial communication interface by using mathematical functions: addition and multiplication.
- The drive reference can be given with frequency input.

It is possible to scale the external reference so that the signal minimum and maximum values correspond to a speed other than the minimum and maximum speed limits.

Settings

Parameter	Additional information
Group *11 REFERENCE SELECT*	External reference source, type and scaling
Group *20 LIMITS*	Operating limits
Group *22 ACCEL/DECEL*	Speed reference acceleration/deceleration ramps
Group *32 SUPERVISION*	Reference supervision

Diagnostics

Actual signal	Additional information
0111/*0112*	REF1/REF2 reference
Group *03 FB ACTUAL SIGNALS*	References in different stages of the reference processing chain

Reference trimming

In reference trimming, the external reference is corrected depending on the measured value of a secondary application variable. The block diagram below illustrates the function.

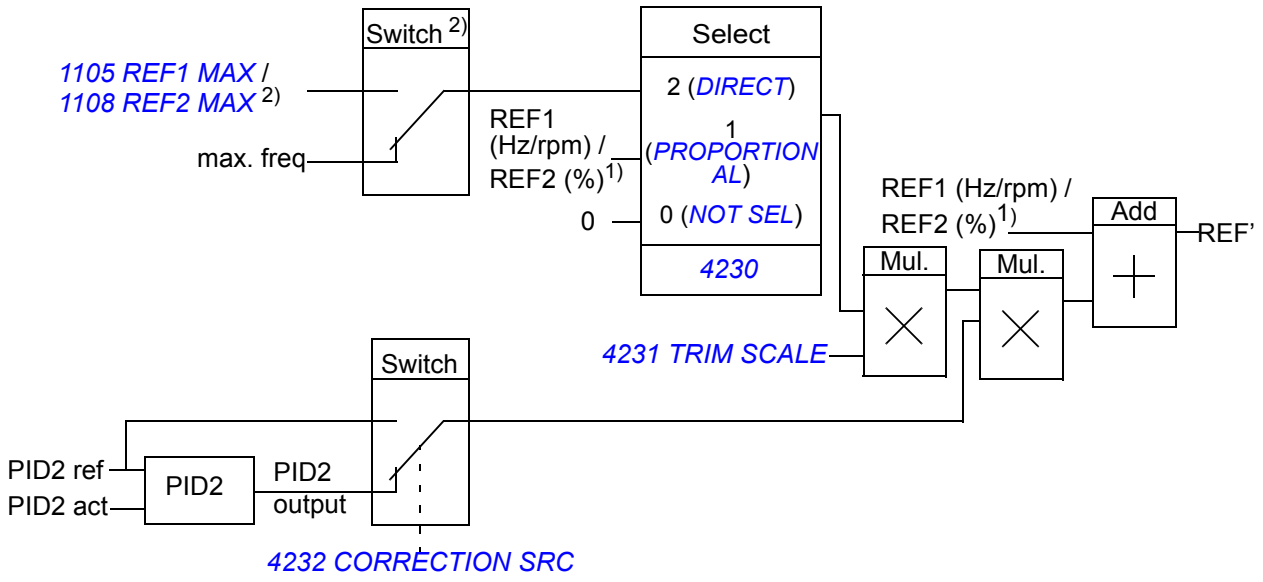

REF1 (Hz/rpm) / REF2 (%) = The drive reference before trimming
REF' = The drive reference after trimming
max. freq = par. *2008* (or *2007* if the absolute value is greater)
PID2 ref = par. *4210*
PID2 act = par. *4214*…*4221*

1) REF1 or REF2 depending on which is active. See parameter *1102*.

2) When par. *4232* = *PID2REF*, the maximum trimming reference is defined by parameter *1105* when REF1 is active and by parameter *1108* when REF2 is active.
When par. *4232* = *PID2OUTPUT*, the maximum trimming reference is defined by parameter *2008* value.

Settings

Parameter	Additional information
1102	REF1/2 selection
4230 …*4232*	Trimming function settings
4201 …*4229*	PID control settings
Group *20 LIMITS*	Drive operation limits

Example

The drive runs a conveyor line. It is speed controlled but the line tension also needs to be taken into account: If the measured tension exceeds the tension setpoint, the speed is slightly decreased, and vice versa.

To accomplish the desired speed correction, the user

- activates the trimming function and connects the tension setpoint and the measured tension to it.
- tunes the trimming to a suitable level.

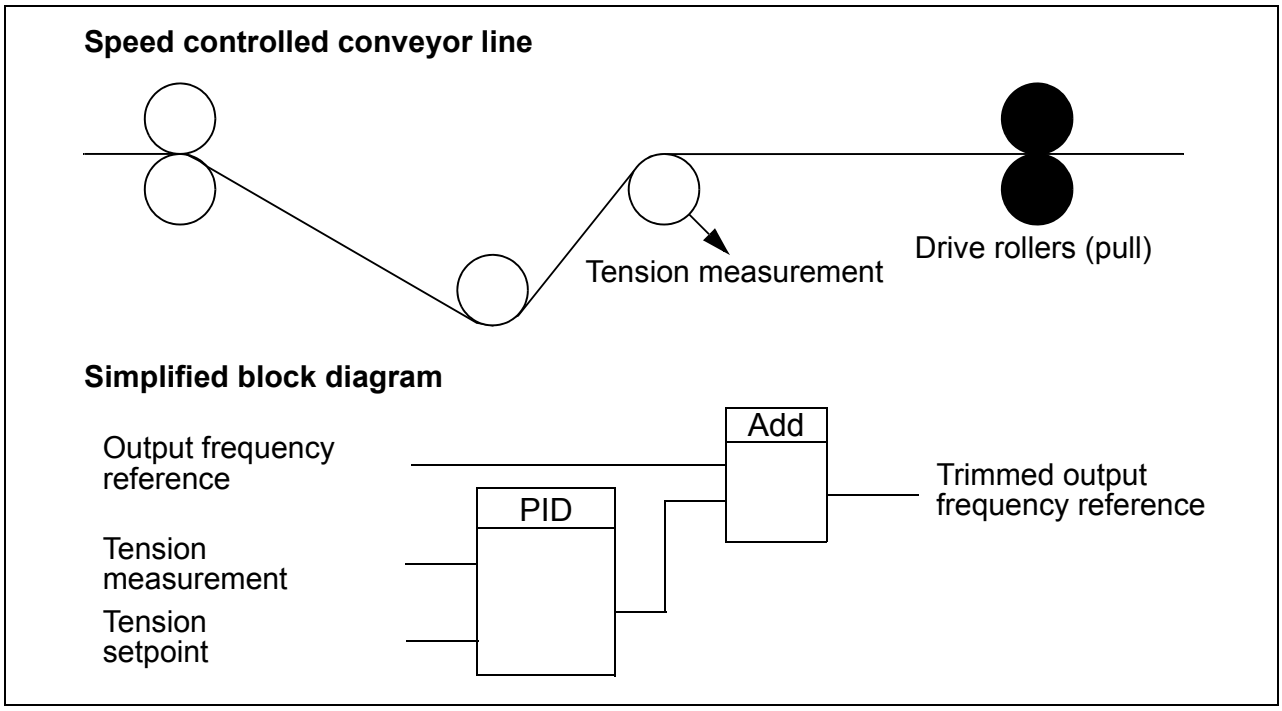

Programmable analog inputs

The drive has two programmable analog voltage/current inputs. The inputs can be inverted, filtered and the maximum and minimum values can be adjusted. The update cycle for the analog input is 8 ms (12 ms cycle once per second). The cycle time is shorter when information is transferred to the application program (8 ms -> 2 ms).

Settings

Parameter	Additional information
Group *11 REFERENCE SELECT*	AI as reference source
Group *13 ANALOG INPUTS*	Analog input processing
3001, *3021*, *3022*, *3107*	AI loss supervision
Group *35 MOTOR TEMP MEAS*	AI in motor temperature measurement
Groups *40 PROCESS PID SET 1* …*42 EXT / TRIM PID*	AI as PID process control reference or actual value source
Group *44 PUMP PROTECTION*	AI as pump protection measurement source

Diagnostics

Actual signal	Additional information
0120, *0121*	Analog input values
1401	AI1/A2 signal loss
Alarm	
AI1 LOSS / *AI2 LOSS*	AI1/AI2 signal below limit *3021 AI1 FAULT LIMIT* / *3022 AI2 FAULT LIMIT*
Fault	
AI1 LOSS / *AI2 LOSS*	AI1/AI2 signal below limit *3021 AI1 FAULT LIMIT* / *3022 AI2 FAULT LIMIT*
PAR AI SCALE	Incorrect AI signal scaling (*1302* < *1301* or *1305* < *1304*)

Programmable analog output

One programmable current output (0…20 mA) is available. Analog output signal can be inverted, filtered and the maximum and minimum values can be adjusted. The analog output signals can be proportional to motor speed, output frequency, output current, motor torque, motor power, etc. The update cycle for the analog output is 2 ms.

It is also possible to write a value to an analog output through a serial communication link.

Settings

Parameter	Additional information
Group *15 ANALOG OUTPUTS*	AO value selection and processing
Group *35 MOTOR TEMP MEAS*	AO in motor temperature measurement

Diagnostics

Actual signal	Additional information
0124	AO value
Fault	
PAR AO SCALE	Incorrect AO signal scaling (*1503* < *1502*)

Programmable digital inputs

The drive has five programmable digital inputs. The update time for the digital inputs is 2 ms.

It is possible to delay the state change of digital inputs with delays defined in group *18 FREQ IN & TRAN OUT*. This enables very simple program sequences by connecting several functions with the same physical wire, eg to remove branches and leaves from a pipe by running the fan in reverse before normal operation.

One digital input (DI5) can be programmed as a frequency input. See section *Frequency input* on page *125*.

Settings

Parameter	Additional information
Group *10 START/STOP/DIR*	DI as start, stop, direction
Group *11 REFERENCE SELECT*	DI in reference selection, or reference source
Group *12 CONSTANT SPEEDS*	DI in constant speed selection
Group *16 SYSTEM CONTROLS*	DI as external Run enable, fault reset or user macro change signal
Group *18 FREQ IN & TRAN OUT*	Delays in DI state changes
2109	DI as external emergency stop command source
2201	DI as acceleration and deceleration ramp selection signal
2209	DI as zero ramp force signal
3003	DI as external fault source
Group *35 MOTOR TEMP MEAS*	DI in motor temperature measurement
3601	DI as timed function enable signal source
3622	DI as booster activation signal source
4010/*4110*/*4210*	DI as PID controller reference signal source
4022/*4122*	DI as sleep function activation signal in PID1
4027	DI as PID1 parameter set 1/2 selection signal source
4034/*4035*	DI as PID reference/output freezing source
4039/*4139*	DI as PID internal setpoint selection source
4228	DI as external PID2 function activation signal source
4406/*4414*	DI as connection signal source for pump inlet/outlet pressure switch
4421	DI as pipe fill enable source
4601	DI as pump clean trigger source
6403	DI as load analyzer logger reset source
8120	DI as PFC interlock source

Diagnostics

Actual signal	Additional information
0160	DI status
0414	DI status at the time the latest fault occurred

Programmable relay output

The drive has one programmable relay output. It is possible to add three additional relay outputs with the optional MREL relay output extension module. For more information, see *MREL-01 relay output extension module user's manual* (3AUA0000035974 [English]).

With a parameter setting it is possible to choose what information to indicate through the relay output: Ready, running, fault, alarm, etc. The update time for the relay output is 2 ms.

A value can be written to a relay output through a serial communication link.

Settings

Parameter	Additional information
Group *14 RELAY OUTPUTS*	RO value selections and operation times

Diagnostics

Actual signal	Additional information
0134	RO Control word through fieldbus control
0162	RO 1 status
0173	RO 2…4 status. With option MREL-01 only.

Frequency input

Digital input DI5 can be programmed as a frequency input. Frequency input (0…16000 Hz) can be used as external reference signal source. The update time for the frequency input is 50 ms. Update time is shorter when information is transferred to the application program (50 ms -> 2 ms).

Settings

Parameter	Additional information
Group *18 FREQ IN & TRAN OUT*	Frequency input minimum and maximum values and filtering
1103/*1106*	External reference REF1/2 through frequency input
4010, *4110*, *4210*	Frequency input as PID reference source

Diagnostics

Actual signal	Additional information
0161	Frequency input value

Transistor output

The drive has one programmable transistor output. The output can be used either as a digital output or frequency output (0…16000 Hz). The update time for the transistor/frequency output is 2 ms.

Settings

Parameter	Additional information
Group *18 FREQ IN & TRAN OUT*	Transistor output settings

Diagnostics

Actual signal	Additional information
0163	Transistor output status
0164	Transistor output frequency

Actual signals

Several actual signals are available:

- Drive output frequency, current, voltage and power
- Motor speed and torque
- Intermediate circuit DC voltage
- Active control location (LOCAL, EXT1 or EXT2)
- Reference values
- Drive temperature
- Operating time counter (h), kWh counter
- Digital I/O and analog I/O status
- PID controller actual values.

Three signals can be shown simultaneously on the assistant control panel display (one signal on the basic control panel display). It is also possible to read the values through the serial communication link or through the analog outputs.

Settings

Parameter	Additional information
1501	Selection of an actual signal to AO
1808	Selection of an actual signal to frequency output
Group *32 SUPERVISION*	Actual signal supervision

Parameter	Additional information
Group *34 PANEL DISPLAY*	Selection of an actual signals to be displayed on the control panel

Diagnostics

Actual signal	Additional information
Groups *01 OPERATING DATA* … *04 FAULT HISTORY*	Lists of actual signals

Power loss ride-through

If the incoming supply voltage is cut off, the drive continues to operate by utilizing the kinetic energy of the rotating motor. The drive is fully operational as long as the motor rotates and generates energy to the drive. The drive can continue the operation after the break if the main contactor remained closed.

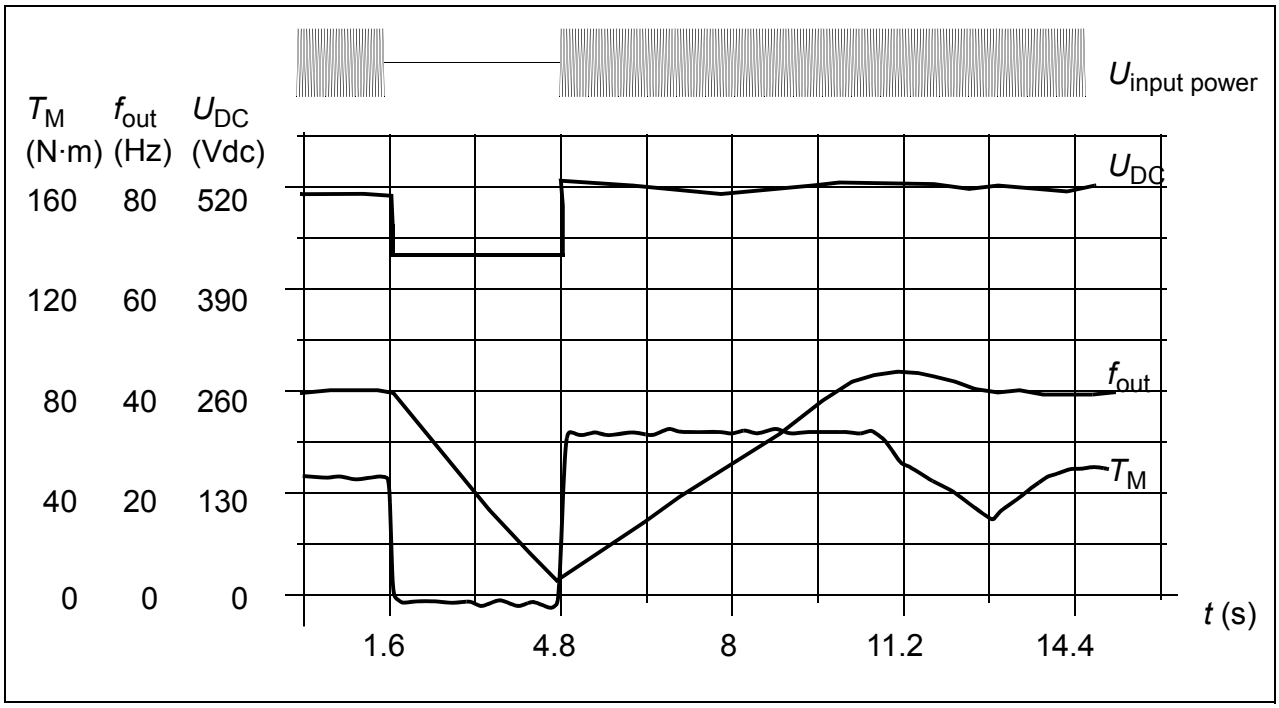

U_{DC} = Intermediate circuit voltage of the drive, f_{out} = Output frequency of the drive, T_M = Motor torque

Loss of supply voltage at nominal load (f_{out} = 40 Hz). The intermediate circuit DC voltage drops to the minimum limit. The controller keeps the voltage steady as long as the input power is switched off. The drive runs the motor in generator mode. The motor speed falls but the drive is operational as long as the motor has enough kinetic energy.

Settings

Parameter *2006 UNDERVOLT CTRL*

DC magnetizing

When DC magnetizing is activated, the drive automatically magnetizes the motor before starting. This feature guarantees the highest possible break-away torque, up to 180% of the nominal motor torque. The Automatic start feature and DC magnetizing cannot be activated at the same time.

Settings

Parameters *2101 START FUNCTION* and *2103 DC MAGN TIME*

Maintenance trigger

A maintenance trigger can be activated to show a notice on the panel display when eg drive power consumption has exceeded the defined trigger point.

Settings

Parameter group *29 MAINTENANCE TRIG*

Acceleration and deceleration ramps

Two user-selectable acceleration and deceleration ramps are available. It is possible to adjust the acceleration/deceleration times and the ramp shape. Switching between the two ramps can be controlled through a digital input or fieldbus.

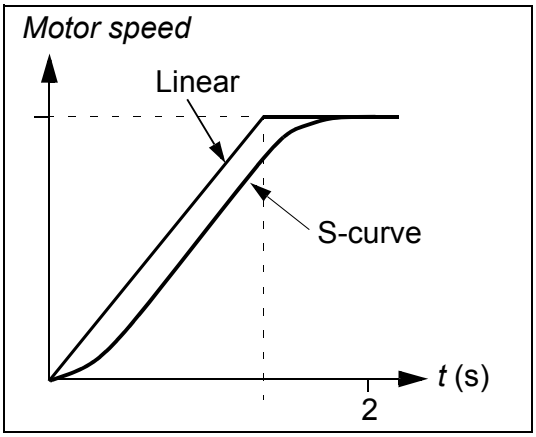

The available ramp shape alternatives are Linear and S-curve.

Linear: Suitable for drives requiring steady or slow acceleration/deceleration.

S-curve: Ideal for conveyors carrying fragile loads, or other applications where a smooth transition is required when changing the speed.

Settings

Parameter group *22 ACCEL/DECEL*

Critical speeds

Critical speeds function is available for applications where it is necessary to avoid certain motor speeds (drive output frequencies) or speed bands (output frequency bands) because of eg mechanical resonance problems. The user can define three critical frequencies or frequency bands.

Settings

Parameter group *25 CRITICAL SPEEDS*

Constant speeds

It is possible to define seven positive constant speeds. Constant speeds are selected with digital inputs. Constant speed activation overrides the external speed reference.

Constant speed selections are ignored if

- PID reference is being followed, or
- drive is in the local control mode.

This function operates on a 2 ms time level.

Settings

Parameter group *12 CONSTANT SPEEDS*

Constant speed 7 (*1208 CONST SPEED 7*) is also used for fault functions. See parameter group *30 FAULT FUNCTIONS*.

Custom U/f ratio

The user can define a U/f curve (output voltage as a function of frequency). This custom ratio is used only in special applications where linear and squared U/f ratio are not sufficient (eg when motor break-away torque needs to be boosted).

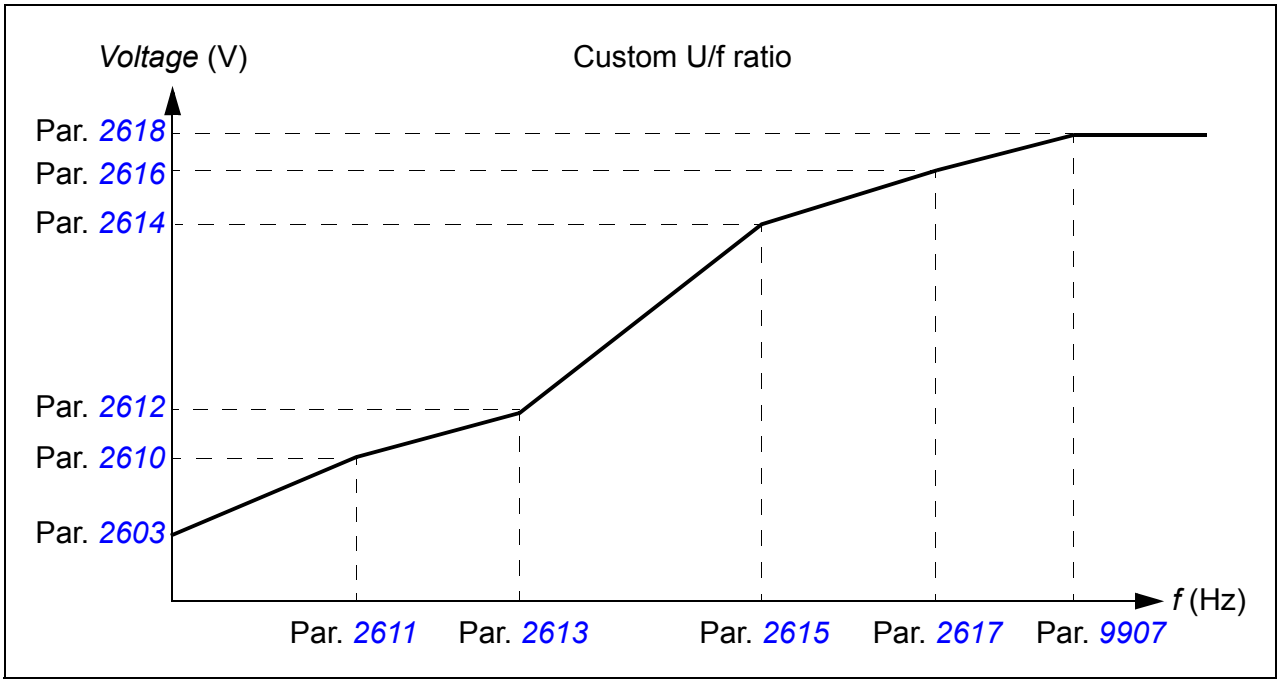

Note: The voltage and the frequency points of the U/f curve must fulfill the following requirements:

2610 < *2612* < *2614* < *2616* < *2618* and
2611 < *2613* < *2615* < *2617* < *9907*

WARNING! High voltage at low frequencies may result in poor performance or motor damage (overheating).

Settings

Parameter	Additional information
2605	Custom U/f ratio activation
2610…2618	Custom U/f ratio settings

Diagnostics

Fault	Additional information
PAR USER U/F	Incorrect U/f ratio

IR compensation

When IR compensation is activated, the drive gives an extra voltage boost to the motor at low speeds. IR compensation is useful in applications that require high break-away torque.

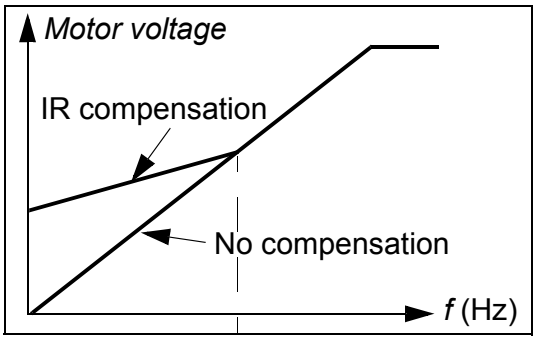

Settings

Parameter *2603 IR COMP VOLT*

Programmable protection functions

AI<Min

AI<Min function defines the drive operation if an analog input signal falls below the set minimum limit.

Settings

Parameters *3001 AI<MIN FUNCTION*, *3021 AI1 FAULT LIMIT* and *3022 AI2 FAULT LIMIT*

Panel loss

Panel loss function defines the operation of the drive if the control panel selected as the control location for the drive stops communicating.

Settings

Parameter *3002 PANEL COMM ERR*

External fault

External faults (1 and 2) can be supervised by defining one digital input as a source for an external fault indication signal.

Settings

Parameters *3003 EXTERNAL FAULT 1* and *3004 EXTERNAL FAULT 2*

Stall protection

The drive protects the motor in a stall situation. It is possible to adjust the supervision limits (frequency, time) and choose how the drive reacts to the motor stall condition (alarm indication / fault indication & drive stop / no reaction).

Settings

Parameters *3010 STALL FUNCTION*…*3012 STALL TIME*

Motor thermal protection

The motor can be protected against overheating by activating the Motor thermal protection function.

The drive calculates the temperature of the motor on the basis of the following assumptions:

1. The motor is in the ambient temperature of 30 °C when power is applied to the drive.
2. Motor temperature is calculated using either the user-adjustable or automatically calculated motor thermal time constant and motor load curve (see the figures below). The load curve should be adjusted in case the ambient temperature exceeds 30 °C.

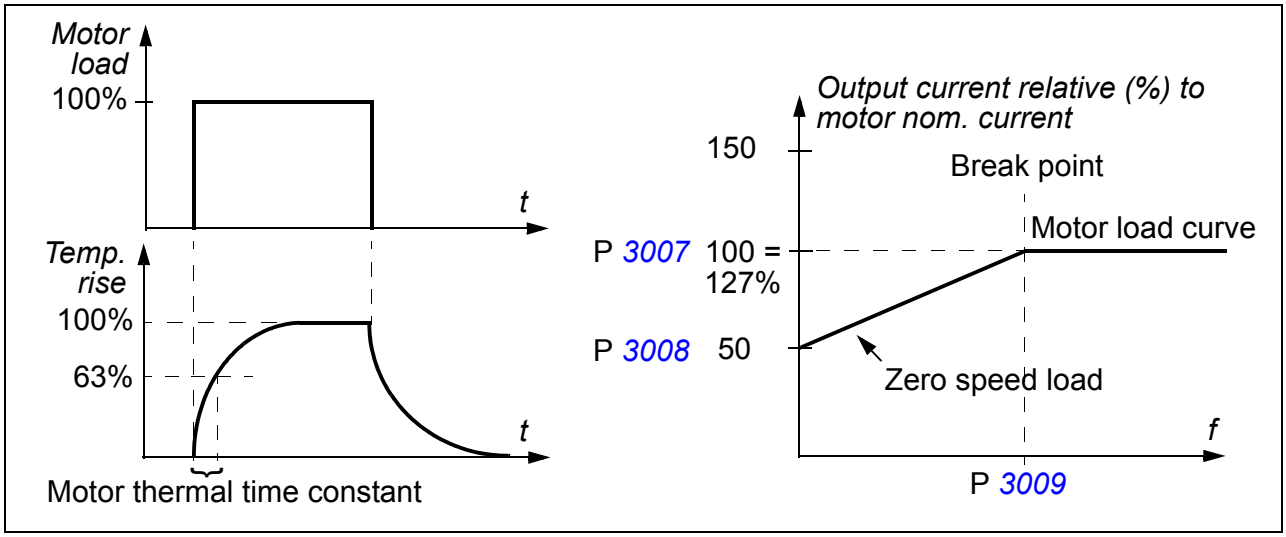

Settings

Parameters *3005 MOT THERM PROT*…*3009 BREAK POINT FREQ*

Note: It is also possible to use the motor temperature measurement function. See section *Motor temperature measurement through the standard I/O* on page *142*.

Earth fault protection

The Earth fault protection detects earth faults in the motor or motor cable. The protection is active only during start.

An earth fault in the input power line does not activate the protection.

Settings

Parameter *3017 EARTH FAULT*

Incorrect wiring

Defines the operation when incorrect input power cable connection is detected.

Settings

Parameter *3023 WIRING FAULT*

Input phase loss

Input phase loss protection circuits supervise the input power cable connection status by detecting intermediate circuit ripple. If a phase is lost, the ripple increases.

Settings

Parameter *3016 SUPPLY PHASE*

Pre-programmed faults

Overcurrent

The overcurrent trip limit for the drive is 325% of the drive nominal current.

DC overvoltage

The DC overvoltage trip limit is 420 V (for 200 V drives) and 840 V (for 400 V drives).

DC undervoltage

The DC undervoltage trip limit is adaptive. See parameter *2006 UNDERVOLT CTRL*.

Drive temperature

The drive supervises the IGBT temperature. There are two supervision limits: Alarm limit and fault trip limit.

Short circuit

If a short circuit occurs, the drive does not start and a fault indication is given.

Internal fault

If the drive detects an internal fault, the drive is stopped and a fault indication is given.

Operation limits

The drive has adjustable limits for output frequency, current (maximum) and DC voltage.

Settings

Parameter group *20 LIMITS*

Power limit

Power limitation is used to protect the input bridge and the DC intermediate circuit. If the maximum allowed power is exceeded, the drive torque is automatically limited. Maximum overload and continuous power limits depend on the drive hardware. For specific values, see chapter *Technical data* on page *325*.

Automatic resets

The drive can automatically reset itself after overcurrent, overvoltage, undervoltage, external and “analog input below a minimum” faults. The Automatic resets must be activated by the user.

Settings

Parameter	Additional information
Group *31 AUTOMATIC RESET*	Automatic reset settings

Diagnostics

Alarm	Additional information
AUTORESET	Automatic reset alarm

Supervisions

The drive monitors whether certain user selectable variables are within the user-defined limits. The user may set limits for speed, current etc. The supervision status can be indicated through relay or digital output.

The supervision function outputs can be used for triggering some drive functionality (start/stop, sleep, pump cleaning).

The supervision functions operate on a 2 ms time level.

Settings

Parameter group *32 SUPERVISION*

Diagnostics

Actual signal	Additional information
1001/*1002*	*EXT1*/*EXT2* start/stop according to supervision functions
1401	Supervision status through RO 1
1402/*1403*/*1410*	Supervision status through RO 2…4. With option MREL-01 only.
1805	Supervision status through DO
4022/*4122*	Sleep start according to supervision functions
4601	Pump clean trigger according to supervision functions

Parameter lock

The user can prevent parameter adjustment by activating the parameter lock.

Settings

Parameters *1602 PARAMETER LOCK* and *1603 PASS CODE*

PID control

There are two built-in PID controllers in the drive:

- Process PID (PID1) and
- External/Trim PID (PID2).

The PID controller can be used when the motor speed needs to be controlled based on process variables such as pressure, flow or temperature.

When the PID control is activated, a process reference (setpoint) is connected to the drive instead of a speed reference. An actual value (process feedback) is also brought back to the drive. The drive compares the reference and the actual values, and automatically adjusts the drive speed in order to keep the measured process quantity (actual value) at the desired level (reference).

The control operates on a 2 ms time level.

Process controller PID1

PID1 has two separate sets of parameters (*40 PROCESS PID SET 1*, *41 PROCESS PID SET 2*). Selection between parameter sets 1 and 2 is defined by a parameter.

In most cases when there is only one transducer signal wired to the drive, only parameter set 1 is needed. Two different parameter sets (1 and 2) are used eg when the load of the motor changes considerably in time.

External/Trim controller PID2

PID2 (*42 EXT / TRIM PID*) can be used in two different ways:

- External controller: Instead of using additional PID controller hardware, the user can connect PID2 output through drive analog output or fieldbus controller to control a field instrument like a damper or a valve.
- Trim controller: PID2 can be used to trim or fine tune the reference of the drive. See section *Reference trimming* on page *121*.

Block diagrams

The figure below shows an application example: The controller adjusts the speed of a pressure boost pump according to the measured pressure and the set pressure reference.

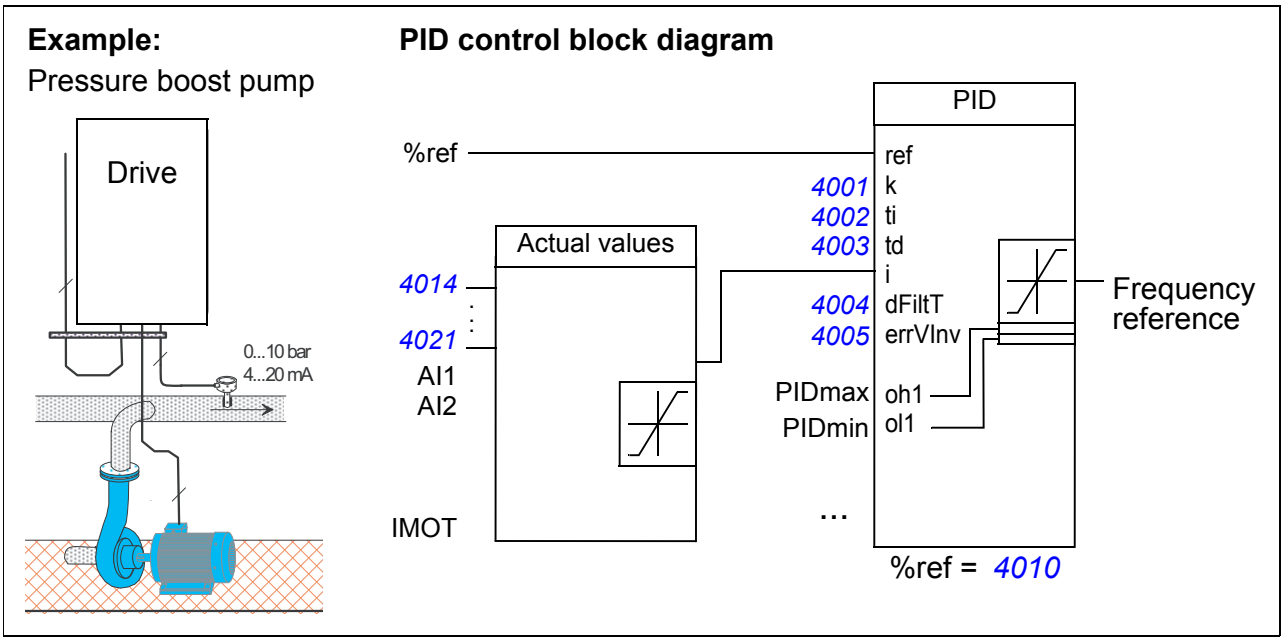

The following figure presents the speed/scalar control block diagram for process controller PID1.

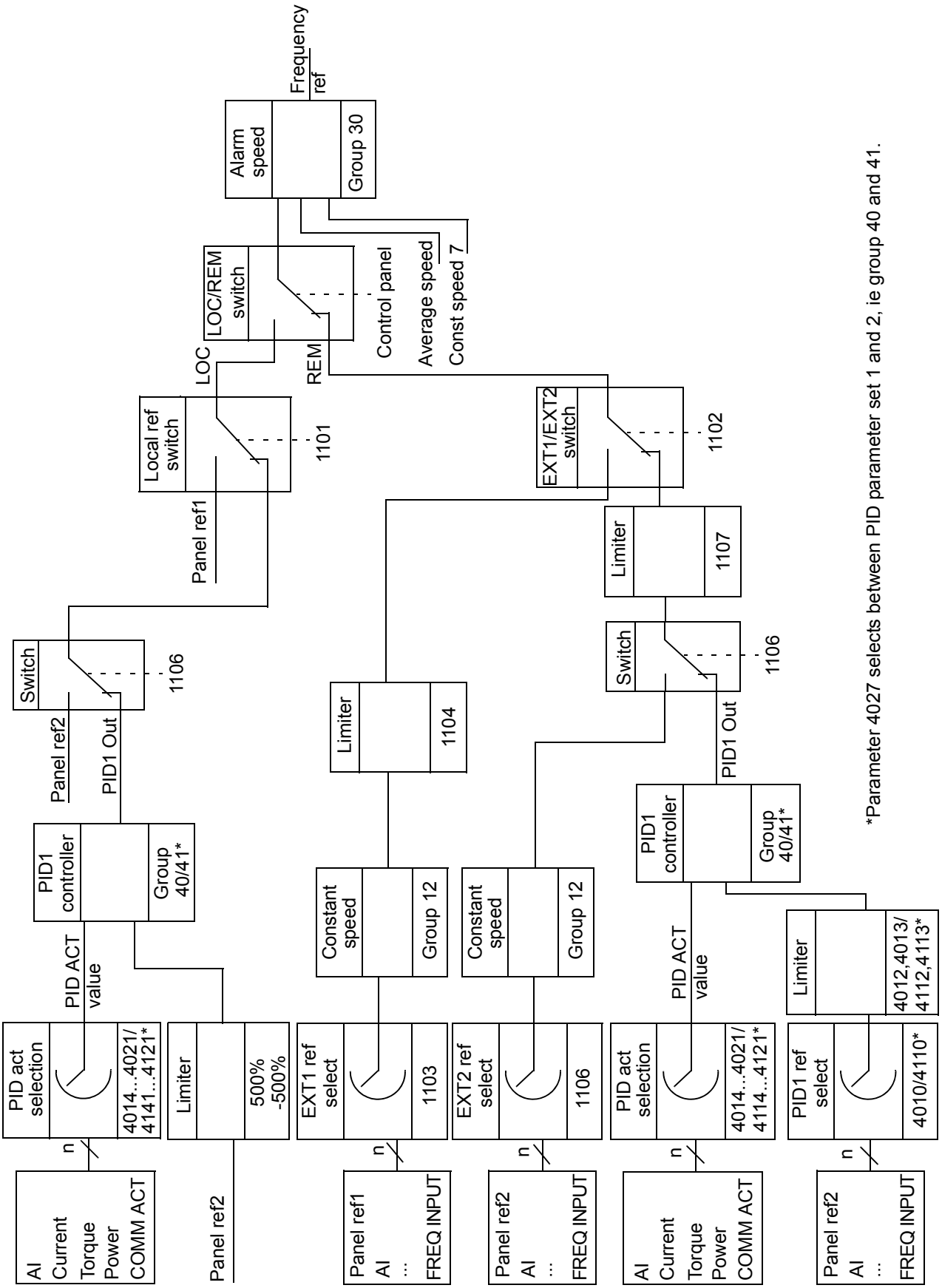

Settings

Parameter	Additional information
1101	Local control mode reference type selection
1102	*EXT1*/*EXT2* selection
1106	PID1 activation
1107	REF2 minimum limit
1501	PID2 output (external controller) connection to AO
9902	PID control macro selection
Groups *40 PROCESS PID SET 1*…*41 PROCESS PID SET 2*	PID1 settings
Group *42 EXT / TRIM PID*	PID2 settings

Diagnostics

Actual signal	Additional information
0126/*0127*	PID 1/2 output value
0128/*0129*	PID 1/2 setpoint value
0130/*0131*	PID 1/2 feedback value
0132/*0133*	PID 1/2 deviation

Example

In the following example, four drives are set up for a duty/assist cycle with internal setpoints (parameters *4011*, *4036*, *4037* and *4038*). As shown in the table below, at each setpoint, a different drive has the highest setpoint value, the second highest value, and so on, enabling a duty cycle between the four drives.

Drive number	Setpoint 1 (*4011*)	Setpoint 2 (*4036*)	Setpoint 3 (*4037*)	Setpoint 4 (*4038*)
1	50%	40%	35%	30%
2	40%	35%	30%	50%
3	35%	30%	50%	40%
4	30%	50%	40%	35%

When the drive system is powered up and the pressure is below all setpoint values, each drive keeps running until it reaches its setpoint. The drive with the highest setpoint value keeps running even after this point and becomes the duty drive which maintains the pressure at the desired value. The drive remains the duty drive until a setpoint change occurs. Using a timer and a digital inputs as the source for setpoint selection, setpoints can automatically be rotated, for example, once per day.

If the pressure in the system falls below the second highest setpoint value, that drive assists to increase the pressure.

To enable the internal setpoints, set *4010 SET POINT SEL* to INTERNAL.

Use timers to control the bits sent to the digital inputs as shown in the table below. Enable setpoint selection through the digital inputs, set *4039 INT SETPNT SEL* to, for example, DI1,2 (7).

	Day 1	Day 2	Day 3	Day 4
DI1	0	1	1	0
DI2	0	0	1	1
Setpoint selected	1 (*4011*)	2 (*4036*)	3 (*4037*)	4 (*4038*)

Sleep function for the process PID (PID1) control

The sleep function operates on a 2 ms time level.

The block diagram below illustrates the sleep function enable/disable logic. The sleep function can be put into use only when the PID control is active.

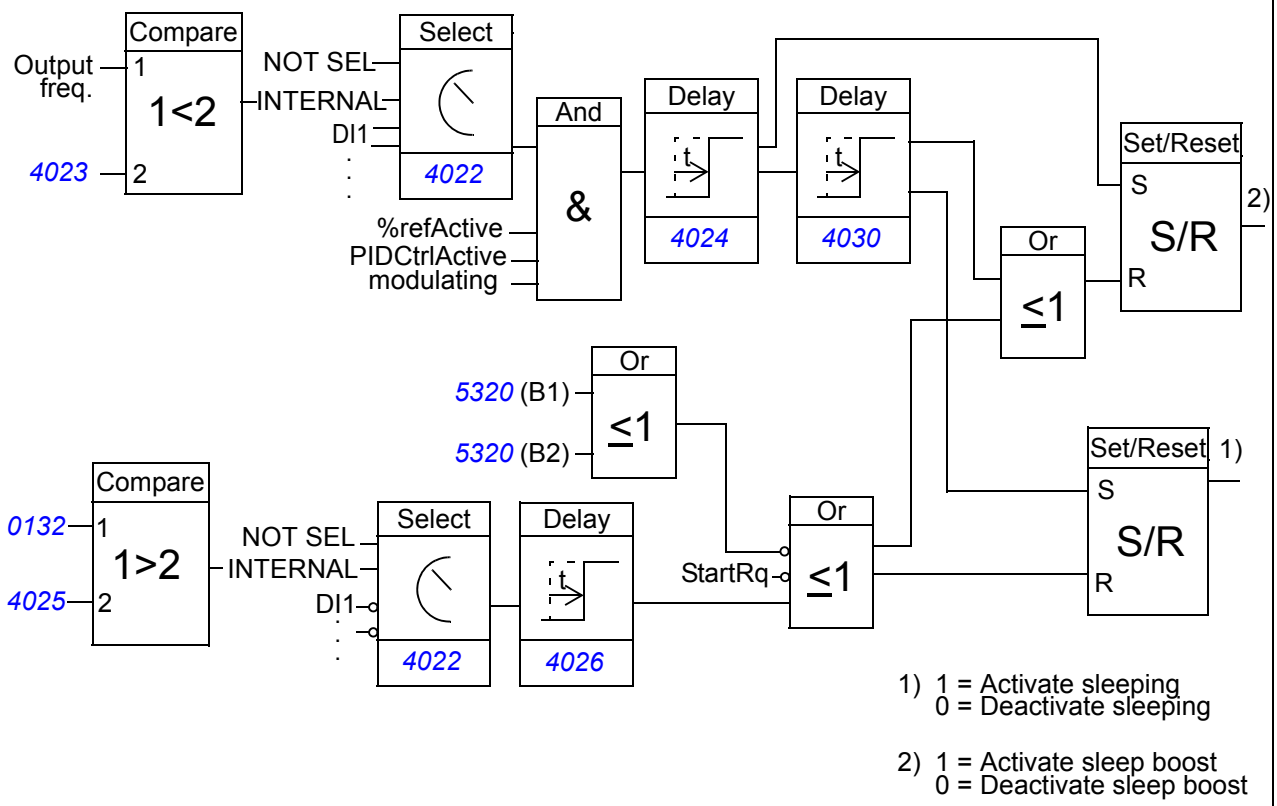

Mot. speed: Actual speed of the motor
%refActive: The % reference (EXT REF2) is in use. See parameter *1102 EXT1/EXT2 SEL*.
PIDCtrlActive: *9902 APPLIC MACRO* is *PID CONTROL*.
modulating: The inverter IGBT control is operating.

Example

The time scheme below visualizes the operation of the sleep function.

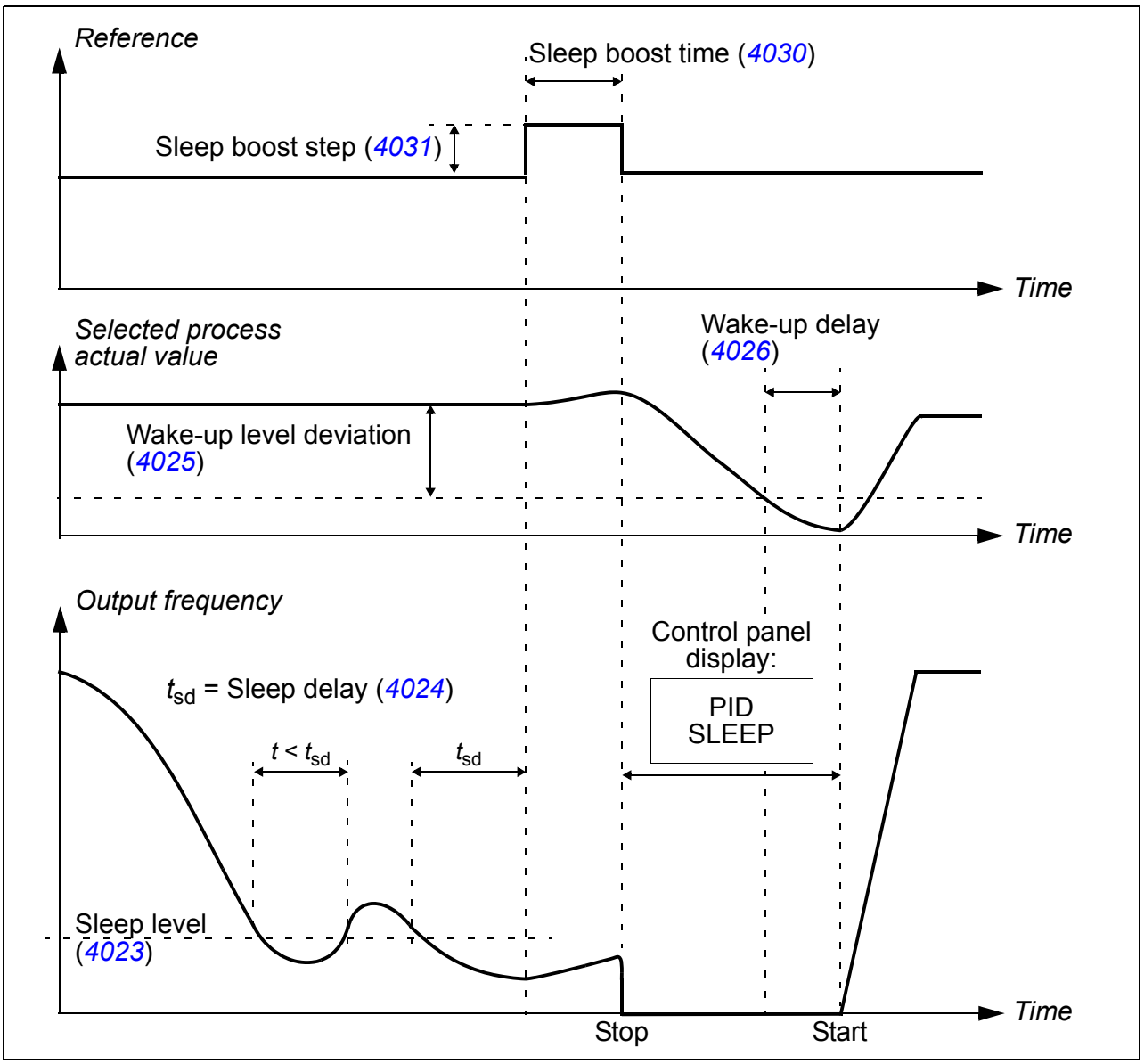

Sleep function for a PID controlled pressure boost pump (when parameter *4022* is set to *INTERNAL*): The water consumption falls at night. As a consequence, the PID process controller decreases the motor speed. However, due to natural losses in the pipes and the low efficiency of the centrifugal pump at low speeds, the motor does not stop but keeps rotating. The sleep function detects the slow rotation, and stops the unnecessary pumping after the sleep delay has passed. The drive shifts into sleep mode, still monitoring the pressure. The pumping restarts when the pressure falls under the allowed minimum level and the wake-up delay has passed.

Settings

Parameter	Additional information
9902	PID control activation
4022…4026, 4030, 4031, 4122…4126, 4130, 4131	Sleep function settings

Diagnostics

Parameter	Additional information
1401	PID sleep function status through RO 1
1402/1403/1410	PID sleep function status through RO 2…4. With option MREL-01 only.
Alarm	**Additional information**
PID SLEEP	Sleep mode

Motor temperature measurement through the standard I/O

This section describes the temperature measurement of one motor when the drive I/O terminals are used as the connection interface.

Motor temperature can be measured using Pt100 or PTC sensors connected to analog input and output.

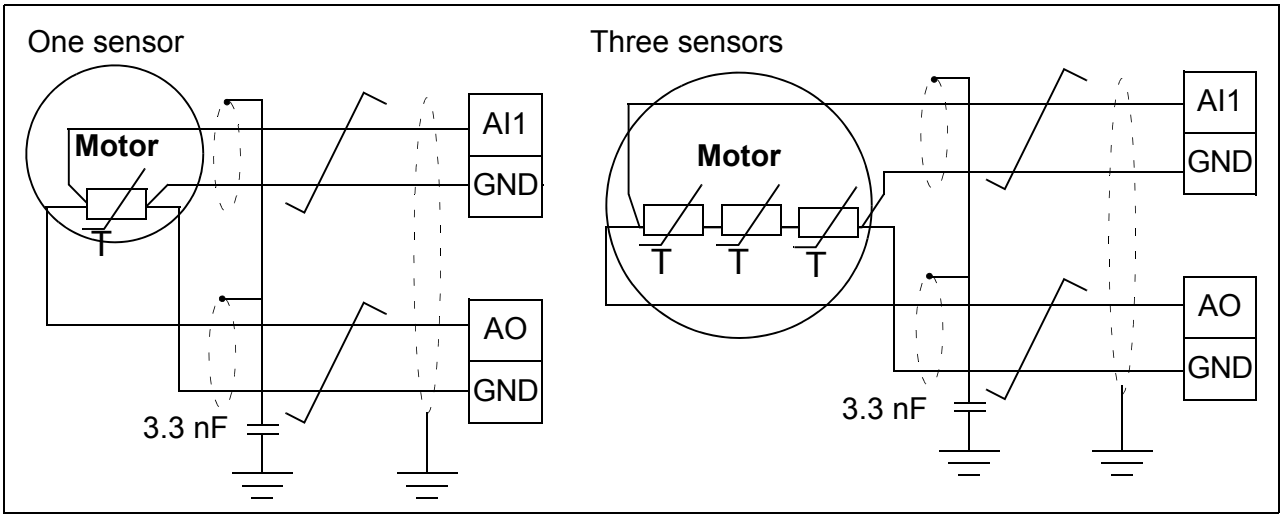

WARNING! According to IEC 664, the connection of the motor temperature sensor requires double or reinforced insulation between motor live parts and the sensor. Reinforced insulation entails a clearance and creepage distance of 8 mm (400/500 V AC equipment).

If the assembly does not fulfill the requirement, the I/O board terminals must be protected against contact and they may not be connected to other equipment, or the temperature sensor must be isolated from the I/O terminals.

It is also possible to monitor motor temperature by connecting a PTC sensor and a thermistor relay between the +24 V DC voltage supply offered by the drive and a digital input. The figure below displays the connection.

Par. *3501* = THERM (0) or THERM(1)

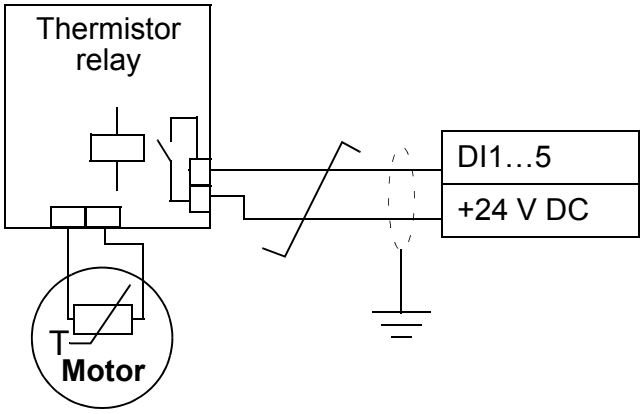

WARNING! According to IEC 664, the connection of the motor thermistor to the digital input requires double or reinforced insulation between motor live parts and the thermistor. Reinforced insulation entails a clearance and creeping distance of 8 mm (400/500 V AC equipment).

If the thermistor assembly does not fulfill the requirement, the other I/O terminals of the drive must be protected against contact, or a thermistor relay must be used to isolate the thermistor from the digital input.

Settings

Parameter	Additional information
Group *13 ANALOG INPUTS*	Analog input settings
Group *15 ANALOG OUTPUTS*	Analog output settings
Group *35 MOTOR TEMP MEAS*	Motor temperature measurement settings
Other	
At the motor end the cable shield should be grounded through, eg a 3.3 nF capacitor. If this is not possible, the shield is to be left unconnected.	

Diagnostics

Actual signal	Additional information
0145	Motor temperature
Alarm/Fault	**Additional information**
MOTOR TEMP/*MOT OVERTEMP*	Excessive motor temp

Timed functions

A variety of drive functions can be time controlled, eg start/stop and EXT1/EXT2 control. The drive offers

- four start and stop times (*START TIME 1*…*START TIME 4*, *STOP TIME 1*…*STOP TIME 4*)
- four start and stop days (*START DAY 1*…*START DAY 4*, *STOP DAY 1*…*STOP DAY 4*)
- four timed functions for collecting the selected time periods 1…4 together (*TIMED FUNC 1 SRC*…*TIMED FUNC 4 SRC*)
- booster time (an additional booster time connected to timed functions).

A timed function can be connected to multiple time periods:

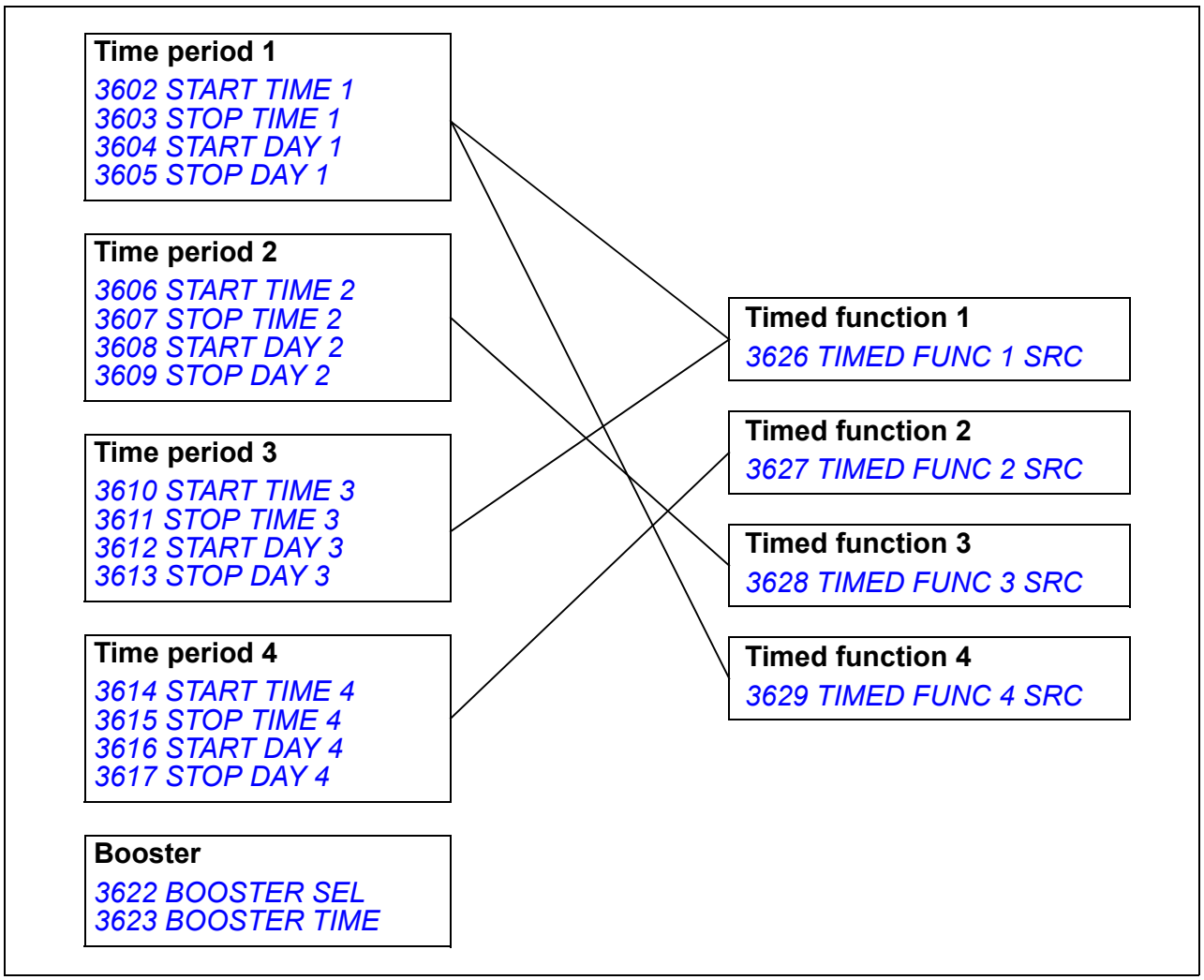

A parameter which is triggered by a timed function can be connected to only one timed function at a time.

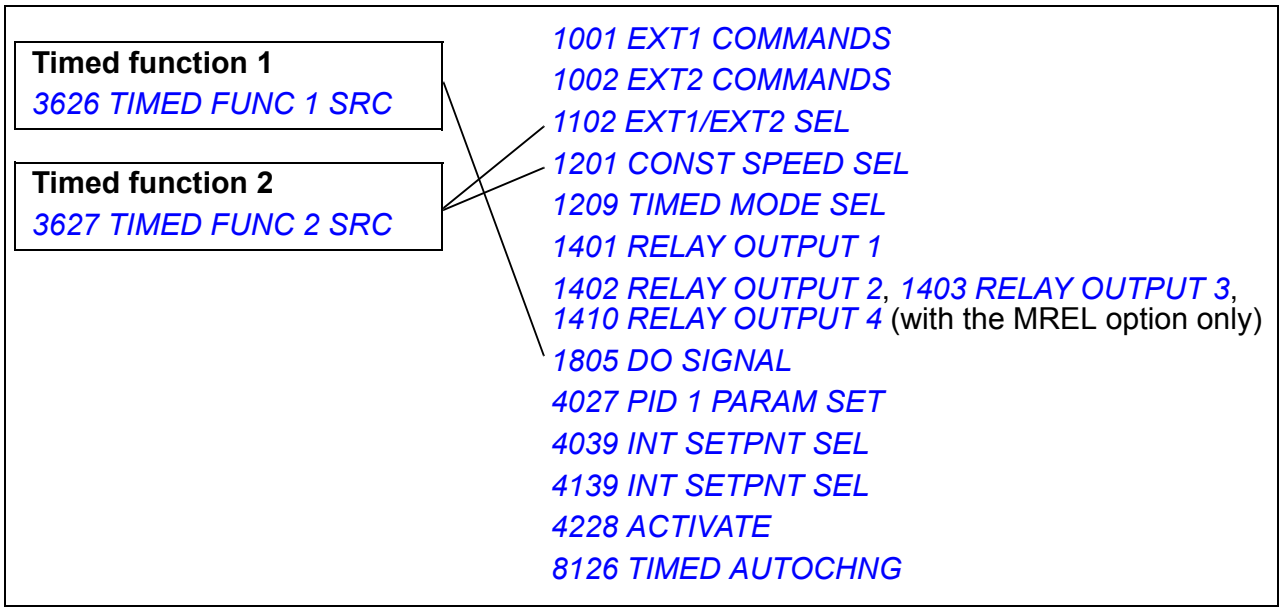

You can use the Timed functions assistant for easy configuring. For more information on the assistants, see section *Assistants mode* on page *91*.

Examples

Air conditioning is active on weekdays from 8:00 to 15:30 (8 a.m to 3:30 p.m) and on Sundays from 12:00 to 15:00 (12 to 3 p.m). By pressing the extension time switch, the air-conditioning is on for an extra hour.

Parameter	Setting
3601 TIMERS ENABLE	*DI1*
3602 START TIME 1	08:00:00
3603 STOP TIME 1	15:30:00
3604 START DAY 1	*MONDAY*
3605 STOP DAY 1	*FRIDAY*
3606 START TIME 2	12:00:00
3607 STOP TIME 2	15:00:00
3608 START DAY 2	*SUNDAY*
3609 STOP DAY 2	*SUNDAY*
3622 BOOSTER SEL	*DI5* (cannot be the same as parameter *3601* value)
3623 BOOSTER TIME	01:00:00
3626 TIMED FUNC 1 SRC	*T1+T2+B*

If timed function is enabled in continuous mode, the start date can be different from the stop date, ie operation can continue over midnight. In the example below, the

drive runs continuously from 18:00 (6 p.m.) on Friday evening to 06:30 (6:30 a.m.) on Monday morning. Timed function is enabled on the rising edge of digital input *DI1*.

Parameter	Setting
3601 TIMERS ENABLE	*DI1 CMODE*
3602 START TIME 1	18:00:00
3603 STOP TIME 1	06:30:00
3604 START DAY 1	*FRIDAY*
3605 STOP DAY 1	*MONDAY*

Settings

Parameter	Additional information
36 TIMED FUNCTIONS	Timed functions settings
1001, *1002*	Timed start/stop control
1102	Timed EXT1/EXT2 selection
1201	Timed constant speed 1 activation
1209	Timed speed selection
1401	Timed function status indicated through relay output RO 1
1402/*1403*/*1410*	Timed function status indicated through relay output RO 2…4. With option MREL-01 only.
1805	Timed function status indicated through digital output DO
4027	Timed PID1 parameter set 1/2 selection
4039	Selection between different internal (constant) set points for the process PID control (PID1 parameter set 1)
4139	Selection between different internal (constant) set points for the process PID control (PID1 parameter set 2)
4228	Timed external PID2 activation
8126	Timed Autochange activation

User load curve

The user can specify a load curve (motor torque as a function of frequency) for supervision. The curve is defined by five points. Supervision can be set for the torque dropping below the underload curve, exceeding the overload curve, or both.

A fault is generated if the torque has been out of the allowed area for longer than the user-defined time limit. An alarm is generated if the torque has been out of the allowed area for longer than the half of the user-defined time limit.

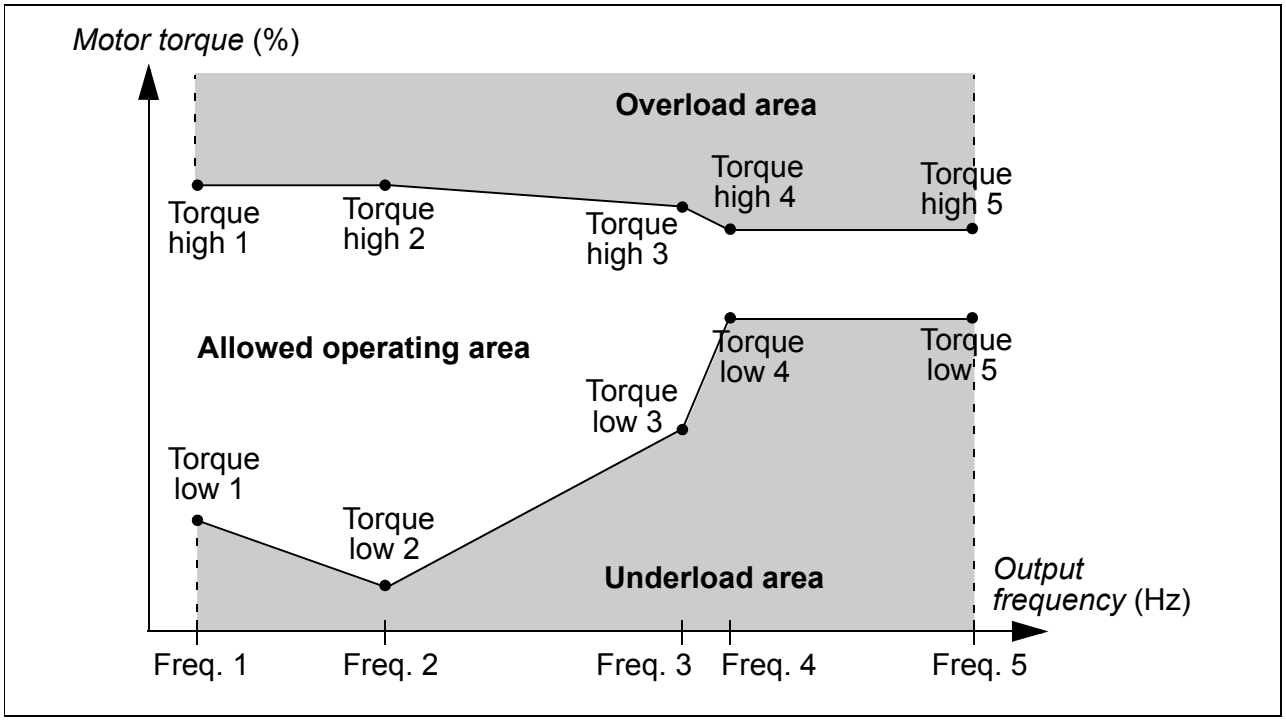

Settings

Parameter	Additional information
Group *37 USER LOAD CURVE*	User load curve settings

Diagnostics

Actual signal	Additional information
0105	Motor torque
Alarm	
USER LOAD CURVE	Out of allowed area for longer than half of the defined time limit
Fault	
USER LOAD CURVE	Out of allowed area for longer than the defined time limit
PAR USER LOAD C	Incorrect user load curve parameter setting (*3704* > *3707* or *3707* > *3710* or *3710* > *3713* or *3713* > *3716* or *3705* > *3706* or *3708* > *3709* or *3711* > *3712* or *3714* > *3715* or *3717* > *3718*)

Energy optimizer

Energy optimizer optimizes the flux so that the total energy consumption and motor noise level are reduced when the drive operates below the nominal load. The total efficiency (motor and drive) can be improved by 1…10% depending on the load torque and speed.

Settings

Parameter	Additional information
4501	Energy optimizer enabling

Energy saving

Energy saving tools calculate energy saved in kWh and MWh, energy saved in local currency as well as reduction in CO_2 emission, all compared to the situation when the pump is connected directly to the supply.

Two actual signals, *0176 SAVED AMOUNT 1* and *0177 SAVED AMOUNT 2* are used to store the energy saved in local currency. To find out the total saved energy in currency units, add the value of signal *0177* multiplied by 1000 to the value of signal *0176*.

Example:
0176 SAVED AMOUNT 1 = 123.4
0177 SAVED AMOUNT 2 = 5
Total saved energy = 5 · 1000 + 123.4 = 5123.4 currency units.

Note: The values of saved energy parameters *0174 SAVED KWH*, *0175 SAVED MWH*, *0176 SAVED AMOUNT 1*, *0177 SAVED AMOUNT 2* and *0178 SAVED CO2* are derived from subtracting the drive's energy consumed from the direct-on-line (DOL) consumption calculated on the basis of parameter *4508 PUMP POWER*. As such, the accuracy of the values is dependent on the accuracy of the power estimate entered in that parameter.

Settings

Parameter	Additional information
Group *45 ENERGY SAVING*	Energy saving settings

Diagnostics

Actual signal	Additional information
0174/*0175*	Energy saved in kWh/Mwh
0176/*0177*	Energy saved in local currency
0178	Reduction in CO_2 emission

Pump cleaning

The Pump cleaning function can be used for preventing solids from building up on pump impellers. The function consists of a programmable sequence of forward and reverse runs of the pump (see the figure below), effectively shaking off any residue on the impeller. This is especially useful with booster and wastewater pumps.

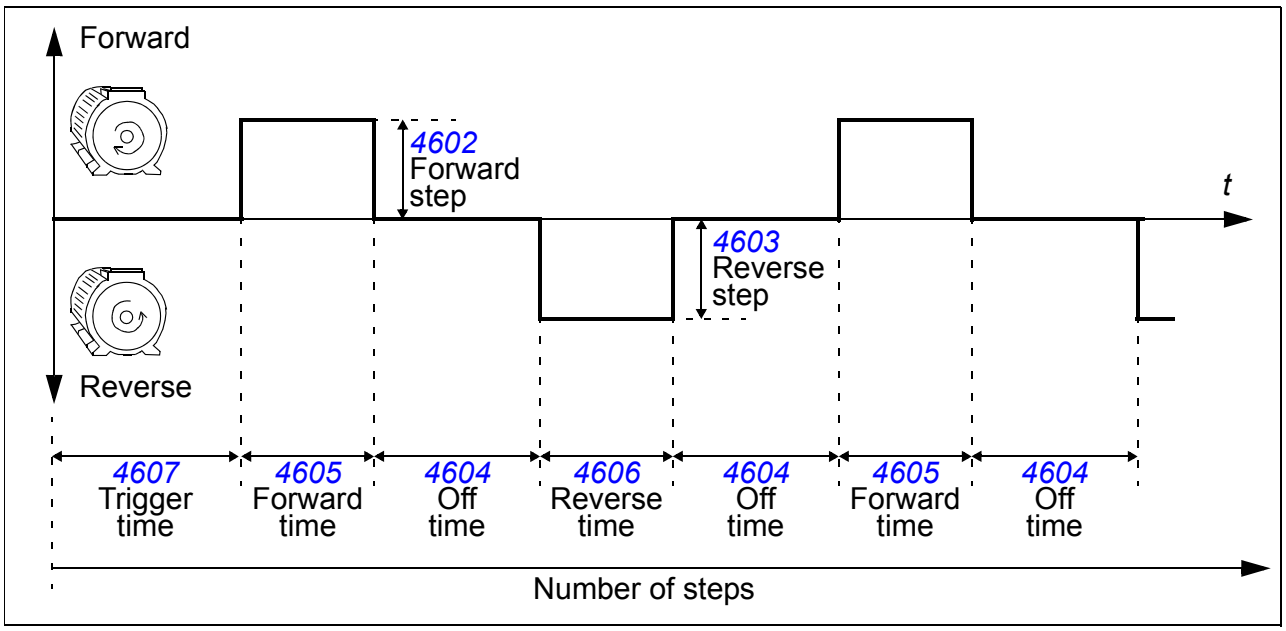

The pump cleaning cycle can be activated at start-up, with a user-defined period, with a selectable digital input or by the Supervision function (for example triggered by the motor input current).

Settings

Parameter	Additional information
Group *46 PUMP CLEANING*	Pump cleaning settings
2205/*2206*	Acceleration time 2 / Deceleration time 2

Load analyzer

The load analyzer can be used for analyzing the customer's process and sizing the drive and the motor.

Peak value logger

The user can select a signal (group *01 OPERATING DATA*) to be monitored by the peak value logger (PVL). The signal is sampled at 2 ms intervals when the drive is running. The logger records the peak (maximum) value of the signal along with the time the peak occurred, as well as output current, DC voltage and output frequency at the time of the peak.

Amplitude loggers

The drive has two amplitude loggers.

For amplitude logger 2 (AL2), the user can select a signal (group *01 OPERATING DATA*) to be sampled at 200 ms intervals when the drive is running, and specify a value that corresponds to 100%. The collected samples are sorted into 10 read-only parameters according to their amplitude. Each parameter represents an amplitude range 10 percentage points wide, and displays the percentage of the collected samples that fall within that range.

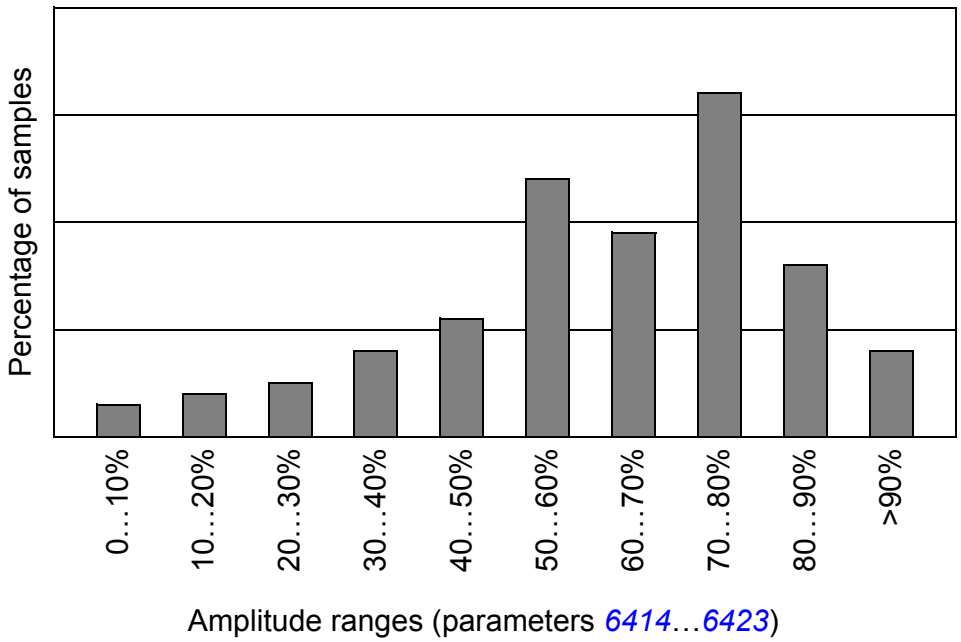

Amplitude logger 1 (AL1) is fixed to monitor output current, and it cannot be reset. With amplitude logger 1, 100% corresponds to the nominal output current of the drive (I_{2N}).

The peak value logger and amplitude logger 2 can be reset by a user-defined method. They are also reset if either of the signals or the peak value filter time is changed.

Settings

Parameter	Additional information
Group *64 LOAD ANALYZER*, parameters *6401*…*6405*	Load analyzer settings

Diagnostics

Actual signal	Additional information
Group *64 LOAD ANALYZER*, parameters *6406*…*6433*	Load analyzer results

PFC and SPFC control

PFC control

Pump and fan control (PFC) switches auxiliary pumps on and off as required by capacity changes. Autochange function alternates between pumps to keep the duty times of the pumps equal. Interlocks function enables the drive to detect if any of the pumps are unavailable (eg switched off for maintenance), in which case the next available pump is started instead.

The drive controls the motor of pump 1, varying the motor speed to control the pump capacity. This motor is the speed regulated motor.

Direct line connections power the motors of pump 2 and pump 3, etc. The drive switches pump 2 (and then pump 3, etc.) on and off as needed. These motors are auxiliary motors.

The drive PID control uses two signals: a process reference and an actual value feedback. The PID controller adjusts the speed (frequency) of the first pump such that the actual value follows the process reference.

When demand (defined by the process reference) exceeds the first motor's capacity (user defined as a frequency limit), the PFC control automatically starts an auxiliary pump. The PFC also reduces the speed of the first pump to account for the auxiliary pump's addition to total output. Then, as before, the PID controller adjusts the speed (frequency) of the first pump such that the actual value follows the process reference. If demand continues to increase, PFC adds additional auxiliary pumps, using the same process.

When demand drops, such that the first pump speed falls below a minimum limit (user defined as a frequency limit), the PFC control automatically stops an auxiliary pump. The PFC also increases the speed of the first pump to account for the auxiliary pump's missing output.

An Interlock function (when enabled) identifies off-line (out of service) motors, and the PFC control skips to the next available motor in the sequence.

An Autochange function (when enabled and with the appropriate switchgear) equalizes duty time between the pump motors. Autochange periodically increments the position of each motor in the rotation – the speed regulated motor becomes the last auxiliary motor, the first auxiliary motor becomes the speed regulated motor, etc.

See also section *PFC control macro* on page *110*.

SPFC control

Soft pump and fan control (SPFC) is used for pump and fan alternation applications where lower pressure peaks are desirable when a new auxiliary motor is connected on-line. SPFC is an easy way to implement soft starting of direct on line (auxiliary)

motors. The main difference between traditional PFC and SPFC is the way SPFC connects auxiliary motors on-line.

SPFC connects auxiliary motors online with a flying start, while the motor is still coasting. Thus, in some cases SPFC makes it possible to soften the start-up current while connecting auxiliary motors on-line. This is why lower pressure peaks on the pipelines and pumps may also be achieved. Connection sequence and powering routine of auxiliary motors in SPFC is explained more detailed in the diagram. The motor stopping routine follows always the normal PFC routine.

SPFC powering routine

The diagram below illustrates the SPFC powering routine.

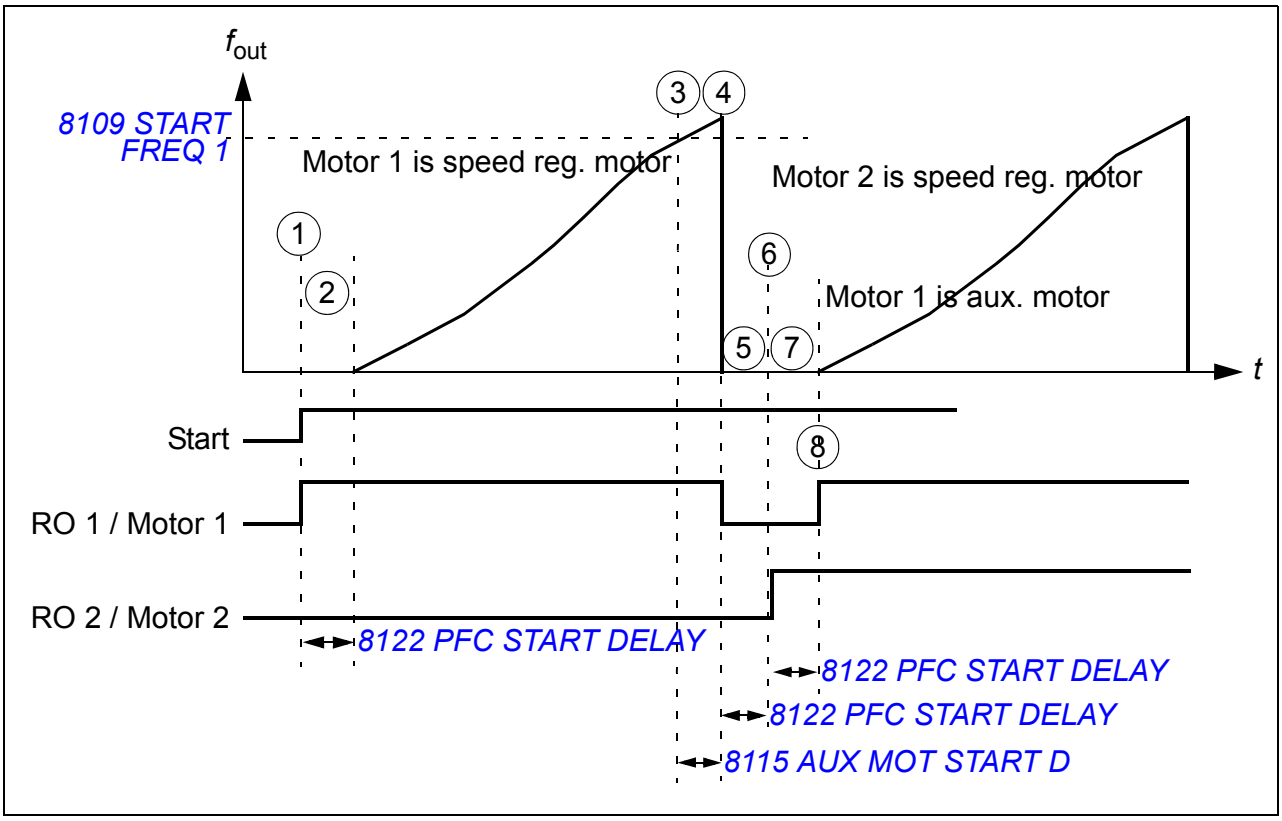

1. At start, relay RO 1 is closed and motor 1 is connected to the drive output.
2. The drive waits for the time specified by parameter *8122 PFC START DELAY* to ensure that the contactor (RO 1) has stabilized and then starts modulating from zero speed. Motor 1 is the speed regulated motor.
3. When the drive output frequency f_{out} rises over the start frequency (*8109 START FREQ 1*), the start delay for the auxiliary motor (*8115 AUX MOT START D*) is set.
4. When delay *8115* has elapsed, the drive coasts to stop and relay RO 1 is opened (motor 1 is disconnected from the drive output).
5. The drive waits for *8122 PFC START DELAY* to ensure that the contactor (RO 1) has stabilized.
6. After delay, *8122* RO 2 is closed and motor 2 is connected to the drive output as the new speed regulated motor.

7. The drive waits for *8122 PFC START DELAY* to ensure that the contactor (RO 2) has stabilized.
8. After delay *8122*, the drive starts modulating from zero speed regulating the speed of motor 2. RO 1 is closed and motor 1 is connected directly on-line as an auxiliary motor.

How to parameterize SPFC control

1. Select the SPFC control macro by setting parameter *9902 APPLIC MACRO* to value 15 (*SPFC CONTROL*).
2. Set PFC reference steps (parameters *8103*…*8105*) if needed.
3. Set PFC start and stop frequencies (parameters *8109*…*8114*).
4. Set PFC auxiliary motor start and stop delays (parameters *8115*…*8116*).
5. Set the number of auxiliary motors (parameter *8117*).
6. Enable Autochange (parameter *8118*). In SPFC control, the parameter only allows SPFC to use PFC's alternation switchgear box. It is not used as the operating time interval between the automatic motor changes as in normal PFC application.
7. Autochange level is ignored (parameter *8119*).
8. Parameterize Interlocks (parameter *8120*).
9. Set Bypass function if needed (parameter *8121*).
10. Set PFC start delay (parameter *8122*).
11. Enable SPFC. Set parameter *8123 PFC ENABLE* to value 2 (*SPFC ACTIVE*). Value 1 (*ACTIVE*) enables normal PFC functionality.
12. Set PFC acceleration and deceleration times if needed (parameters *8124*…*8125*).
13. Autochange enable with a timed function is ignored (parameter *8126*).
14. Set relays in group *14 RELAY OUTPUTS*. (Transistor output TO [parameter *1805 DO SIGNAL*] can be used as an additional relay output, if needed.) Both PFC and SPFC use these relays. You must set at least as many relays as there are motors set for SPFC (= the number of auxiliary motors [parameter *8117*] + 1 [speed regulated motor] when SPFC is used).
15. Set number of PFC controlled motors in parameter *8127* (= number of PFC relays in group *14 RELAY OUTPUTS*).
16. Also set other needed motor dependent parameters, eg *2007 MINIMUM FREQ*, *2008 MAXIMUM FREQ* and *2605 U/F RATIO*.

SPFC control requires the Autochange function. PFC control and SPFC control default settings have differences in acceleration time (*2202*), deceleration time (*2203*) and auxiliary motor stop delay (*8116*) parameters.

See also section *SPFC control macro* on page *111*.

Settings

Parameter	Additional information
Group *14 RELAY OUTPUTS*	Selections of relay outputs for starting and stopping of motors
Group *18 FREQ IN & TRAN OUT*	Selections of relay outputs for starting and stopping of motors (transistor output can be used as an additional relay)
Group *44 PUMP PROTECTION*	Pump protection (pressure monitoring) settings
Group *81 PFC CONTROL*; *8123*	PFC control settings; PFC/SPFC enable/disable

Diagnostics

Actual signal	Additional information
0116	Application block output signal
0162	RO 1 status
0163	TO status
0173	RO 2…4 status. With option MREL-01 only.
Alarm	
AUTOCHANGE	PFC Autochange function active
PFC I LOCK	PFC interlocks active
INLET LOW, *INLET VERY LOW*	Pressure at pump/fan inlet too low
OUTLET HIGH, *OUTLET VERY HIGH*	Pressure at pump/fan outlet too high
Fault	**Additional information**
PAR PFC REF NEG	*2007* < 0
PAR PFC IO 1	Not enough relays parameterized for PFC. Conflict between group *14 RELAY OUTPUTS*, parameter *8117* and parameter *8118*.
PAR PFC IO 2	Parameter *8127* does not match the PFC motors in group *14 RELAY OUTPUTS* and parameter *8118*
PAR PFC IO 3	Allocation of a digital input (interlock) for each PFC motor not possible
INLET LOW, *INLET VERY LOW*	Pressure at pump/fan inlet too low
OUTLET HIGH, *OUTLET VERY HIGH*	Pressure at pump/fan outlet too high

Connection diagram example

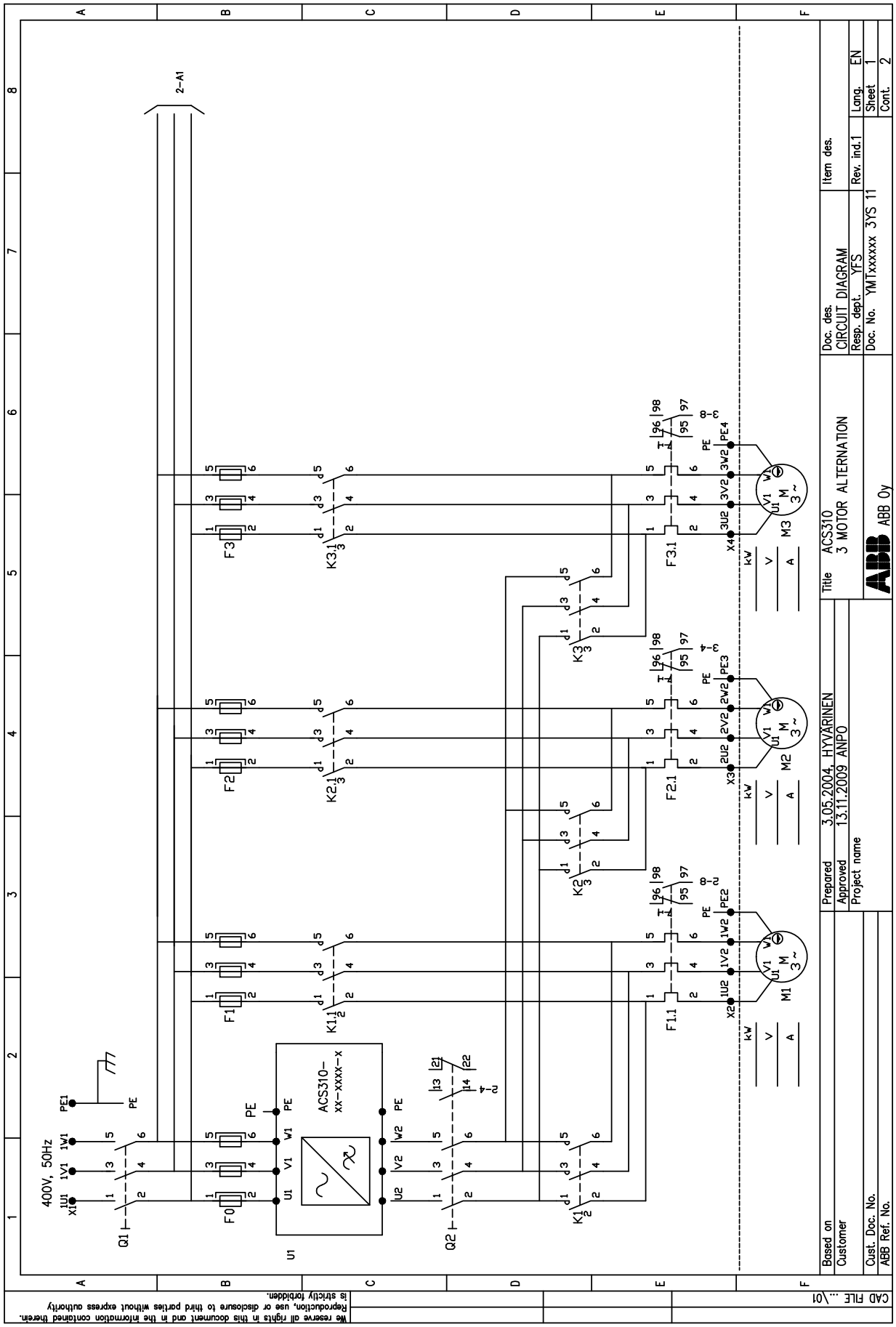

Pipe fill

The Pipe fill function is used for soft-starting a pump system. The pipe system is filled smoothly with water, and when the pressure in the pipe system is near the final set point, the drive changes to closed loop control.

Reference ramping

If there is no change detected in the actual pressure, the Pipe fill function increases the pump motor speed. When a change in the actual pressure is detected, the speed stepping is stopped and the motor speed remains unchanged until the pressure stops changing.

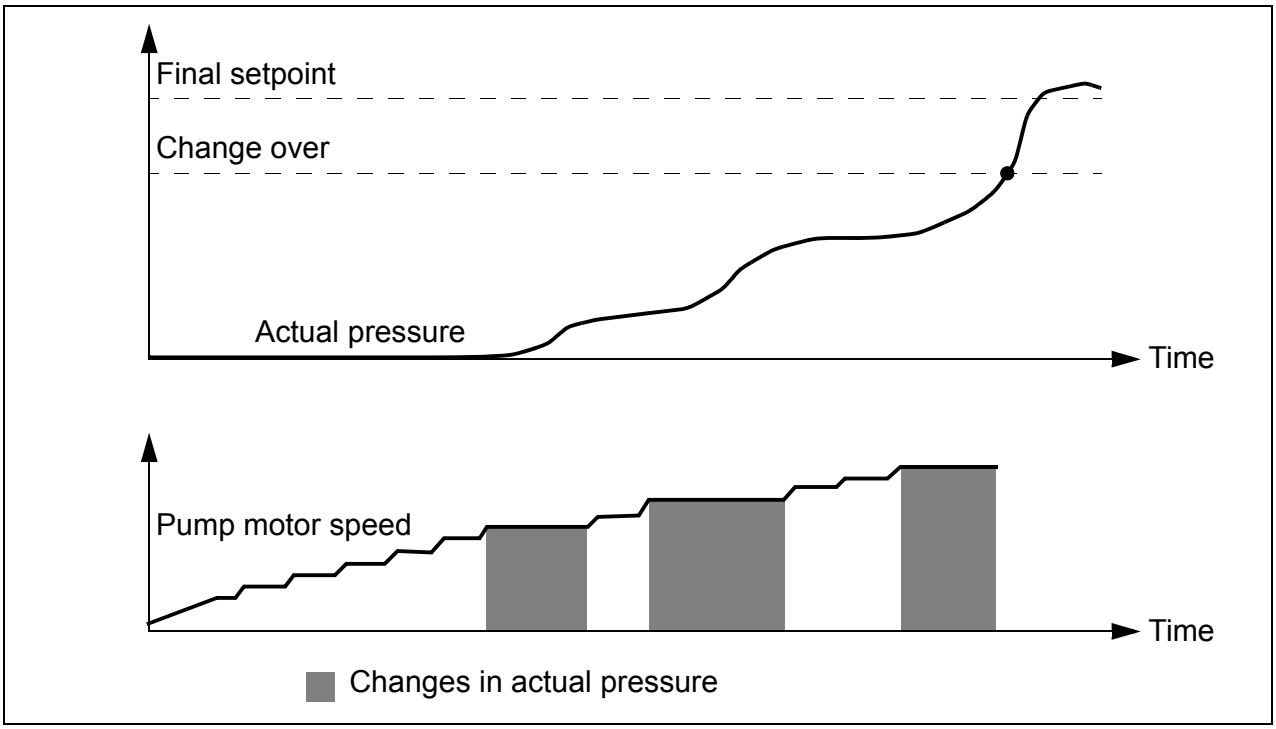

PID reference ramping

After PID deviation is below PID ENABLE DEV, PID reference ramping is enabled. The PID reference ramping parameters are in group 40.

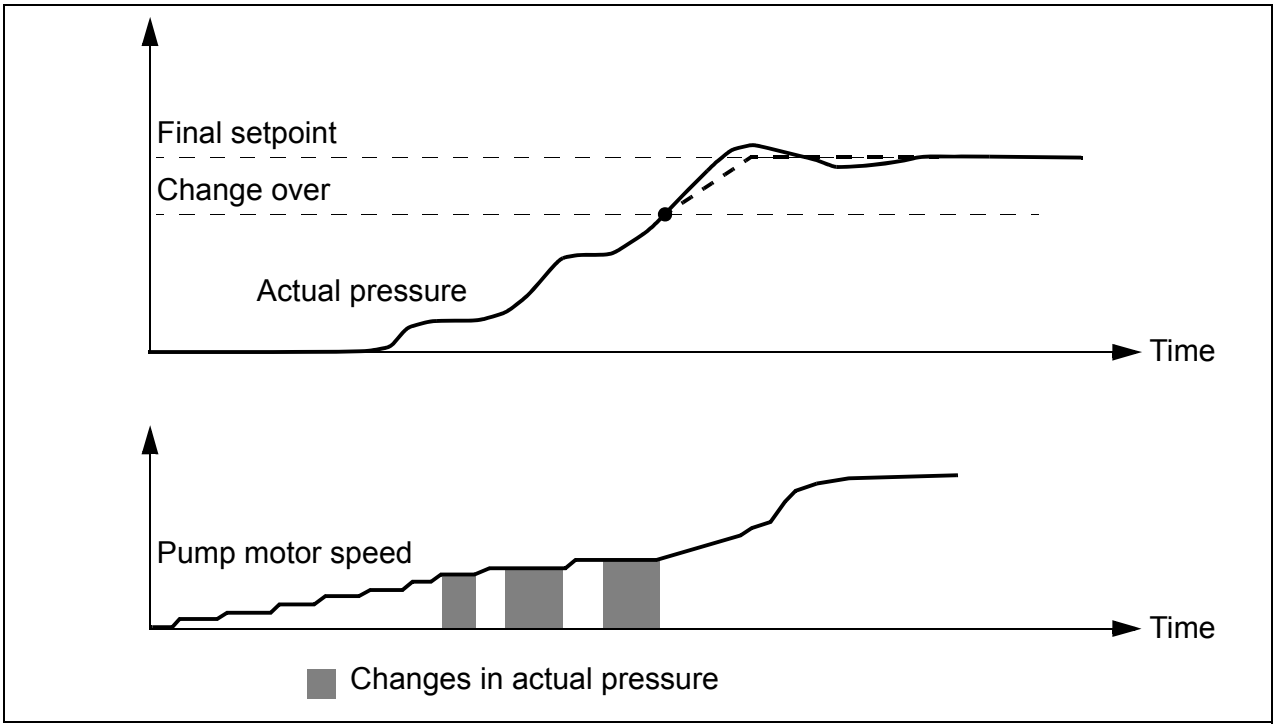

Settings

Parameter	Additional information
Group *40 PROCESS PID SET 1* parameters *4032* and *4033.*	Process PID settings
Group *44 PUMP PROTECTION* parameters *4422*…*4426*	Pump protection (pressure monitoring) settings

12

Actual signals and parameters

What this chapter contains

The chapter describes the actual signals and parameters and gives the fieldbus equivalent values for each signal/parameter. It also contains a table of the default values for the different macros.

Note: When the control panel is in the short parameter view, ie when parameter *1611 PARAMETER VIEW* is set to 2 (*SHORT VIEW*), the control panel only shows a subset of all signals and parameters. The lists of these signals and parameters starts on page *162*.

To be able to view all actual signals and parameters, set parameter *1611 PARAMETER VIEW* to 3 (*LONG VIEW*). The descriptions of all actual signals and parameters start on pages *164* and *171*, respectively.

Terms and abbreviations

Term	Definition
Actual signal	Signal measured or calculated by the drive. Can be monitored by the user. No user setting possible. Groups 01…04 contain actual signals.
Def	Parameter default value
Parameter	A user-adjustable operation instruction of the drive. Groups 10…99 contain parameters. **Note:** Parameter selections are shown on the Basic control panel as integer values. Eg parameter *1001 EXT1 COMMANDS* selection *COMM* is shown as value 10 (which is equal to the fieldbus equivalent FbEq).
FbEq	Fieldbus equivalent: The scaling between the value and the integer used in serial communication.
E	Refers to types 03E- with European parametrization
U	Refers to types 03U- with US parametrization

Fieldbus equivalent

Example: If *2008 MAXIMUM FREQ* (see page *193*) is set from an external control system, an integer value of 1 corresponds to 0.1 Hz. All the read and sent values are limited to 16 bits (-32768…32767).

Default values with different macros

When application macro is changed (*9902 APPLIC MACRO*), the software updates the parameter values to their default values. The table below shows the parameter default values for different macros. For other parameters, the default values are the same for all macros. See the parameter list starting on page *171*.

Index	Name/ Selection	ABB STANDARD	3-WIRE	ALTERNATE	MOTOR POT	HAND/ AUTO	PID CONTROL	PFC CONTROL	SPFC CONTROL
9902	*APPLIC MACRO*	1 = *ABB STANDARD*	2 = *3-WIRE*	3 = *ALTERNATE*	4 = *MOTOR POT*	5 = *HAND/AUTO*	6 = *PID CONTROL*	7 = *PFC CONTROL*	15 = *SPFC CONTROL*
1001	*EXT1 COMMANDS*	2 = *DI1,2*	4 = *DI1P,2P,3*	9 = *DI1F,2R*	2 = *DI1,2*	2 = *DI1,2*	1 = *DI1*	1 = *DI1*	1 = *DI1*
1002	*EXT2 COMMANDS*	0 = *NOT SEL*	0 = *NOT SEL*	0 = *NOT SEL*	0 = *NOT SEL*	21 = *DI5,4*	20 = *DI5*	20 = *DI5*	20 = *DI5*
1003	*DIRECTION*	3 = *REQUEST*	3 = *REQUEST*	3 = *REQUEST*	3 = *REQUEST*	3 = *REQUEST*	1 = *FORWARD*	1 = *FORWARD*	1 = *FORWARD*
1102	*EXT1/EXT2 SEL*	0 = *EXT1*	0 = *EXT1*	0 = *EXT1*	0 = *EXT1*	3 = *DI3*	2 = *DI2*	2 = *DI2*	2 = *DI2*
1103	*REF1 SELECT*	1 = *AI1*	1 = *AI1*	1 = *AI1*	12 = *DI3U,4D(NC)*	1 = *AI1*	1 = *AI1*	1 = *AI1*	1 = *AI1*
1106	*REF2 SELECT*	2 = *AI2*	2 = *AI2*	2 = *AI2*	2 = *AI2*	2 = *AI2*	19 = *PID1OUT*	19 = *PID1OUT*	19 = *PID1OUT*
1201	*CONST SPEED SEL*	9 = *DI3,4*	10 = *DI4,5*	9 = *DI3,4*	5 = *DI5*	0 =*NOT SEL*	3 = *DI3*	0 = *NOT SEL*	0 = *NOT SEL*
1304	*MINIMUM AI2*	1.0%	1.0%	1.0%	1.0%	20.0%	20.0%	20.0%	20.0%
1401	*RELAY OUTPUT 1*	3 = *FAULT(-1)*	3 = *FAULT(-1)*	3 = *FAULT(-1)*	3 = *FAULT(-1)*	3 = *FAULT(-1)*	3 = *FAULT(-1)*	31 = *PFC*	31 = *PFC*
1601	*RUN ENABLE*	0 = *NOT SEL*	0 = *NOT SEL*	0 = *NOT SEL*	0 = *NOT SEL*	0 = *NOT SEL*	4 = *DI4*	0 = *NOT SEL*	0 = *NOT SEL*
1805	*DO SIGNAL*	3 = *FAULT(-1)*	3 = *FAULT(-1)*	3 = *FAULT(-1)*	3 = *FAULT(-1)*	3 = *FAULT(-1)*	3 = *FAULT(-1)*	3 = *FAULT(-1)*	31 = *PFC*
2008	*MAXIMUM FREQ*	50.0 Hz	50.0 Hz	50.0 Hz	50.0 Hz	50.0 Hz	50.0 Hz	52.0 Hz	52.0 Hz
2201	*ACC/DEC 1/2 SEL*	5 = *DI5*	0 = *NOT SEL*	5 = *DI5*	0 = *NOT SEL*	0 = *NOT SEL*	0 = *NOT SEL*	0 = *NOT SEL*	0 = *NOT SEL*
2202	*ACCELER TIME 1*	5.0 s	5.0 s	5.0 s	5.0 s	5.0 s	5.0 s	5.0 s	30.0 s
2203	*DECELER TIME 1*	5.0 s	5.0 s	5.0 s	5.0 s	5.0 s	5.0 s	5.0 s	30.0 s
3019	*COMM FAULT TIME*	3.0 s	3.0 s	3.0 s	3.0 s	3.0 s	3.0 s	3.0 s	10.0 s
4001	*GAIN*	1.0	1.0	1.0	1.0	1.0	1.0	2.5	2.5
4002	*INTEGRATION TIME*	60.0 s	60.0 s	60.0 s	60.0 s	60.0 s	60.0 s	3.0 s	3.0 s
4101	*GAIN*	1.0	1.0	1.0	1.0	1.0	1.0	2.5	2.5
4102	*INTEGRATION TIME*	60.0 s	60.0 s	60.0 s	60.0 s	60.0 s	60.0 s	3.0 s	3.0 s
8116	*AUX MOT STOP D*	3.0 s	3.0 s	3.0 s	3.0 s	3.0 s	3.0 s	3.0 s	20.0 s
8118	*AUTOCHNG INTERV*	0.0 = NOT SEL	0.0 = NOT SEL	0.0 = NOT SEL	0.0 = NOT SEL	0.0 = NOT SEL	0.0 = NOT SEL	0.0 = NOT SEL	0.1 h
8123	*PFC ENABLE*	0 = *NOT SEL*	0 = *NOT SEL*	0 = *NOT SEL*	0 = *NOT SEL*	0 = *NOT SEL*	0 = *NOT SEL*	1 = *ACTIVE*	2 = *SPFC ACTIVE*

Actual signals in the short parameter view

Actual signals in the short parameter view			
No.	**Name/Value**	**Description**	**FbEq**
04 FAULT HISTORY		Fault history (read-only). See group *04 FAULT HISTORY* in the list of all parameters.	
0401	LAST FAULT	Code of the latest fault.	1 = 1

Parameters in the short parameter view

Parameters in the short parameter view			
No.	**Name/Value**	**Description**	**Def/FbEq**
11 REFERENCE SELECT		Panel reference type, external control location selection and external reference sources and limits. See group *11 REFERENCE SELECT* in the list of all parameters.	
1105	REF1 MAX	Defines the maximum value for external reference REF1.	E: 50.0 Hz U: 60.0 Hz
12 CONSTANT SPEEDS		Constant speed (drive output frequency) selection and values. See group *12 CONSTANT SPEEDS* in the list of all parameters.	
1202	CONST SPEED 1	Defines constant drive output frequency 1.	E: 5.0 Hz U: 6.0 Hz
1203	CONST SPEED 2	Defines constant drive output frequency 2.	E: 10.0 Hz U: 12.0 Hz
1204	CONST SPEED 3	Defines constant drive output frequency 3.	E: 15.0 Hz U: 18.0 Hz
13 ANALOG INPUTS		Analog input signal processing. See group *13 ANALOG INPUTS* in the list of all parameters.	
1301	MINIMUM AI1	Defines the minimum %-value that corresponds to minimum mA/(V) signal for analog input AI1.	1.0%
14 RELAY OUTPUTS		Status information indicated through relay output, and relay operating delays. See group *14 RELAY OUTPUTS* in the list of all parameters.	
1401	RELAY OUTPUT 1	Selects a drive status indicated through relay output RO 1.	*FAULT(-1)*
16 SYSTEM CONTROLS		Parameter view, Run enable, parameter lock etc. See group *16 SYSTEM CONTROLS* in the list of all parameters.	
1611	PARAMETER VIEW	Selects the parameter view, ie which parameters are shown on the control panel.	*SHORT VIEW*
20 LIMITS		Drive operation limits. See group *20 LIMITS* in the list of all parameters.	
2008	MAXIMUM FREQ	Defines the maximum limit for the drive output frequency.	E: 50.0 Hz U: 60.0 Hz
21 START/STOP		Start and stop modes of the motor. See group *21 START/STOP* in the list of all parameters.	
2102	STOP FUNCTION	Selects the motor stop function.	*COAST*

Parameters in the short parameter view			
No.	**Name/Value**	**Description**	**Def/FbEq**
22 ACCEL/DECEL		Acceleration and deceleration times. See group *22 ACCEL/DECEL* in the list of all parameters.	
2202	ACCELER TIME 1	Defines the acceleration time 1.	5.0 s
2203	DECELER TIME 1	Defines the deceleration time 1.	5.0 s
99 START-UP DATA		Language selection. Definition of motor set-up data. See group *99 START-UP DATA* in the list of all parameters.	
9901	LANGUAGE	Selects the display language.	*ENGLISH*
9902	APPLIC MACRO	Selects the application macro.	*ABB STANDARD*
9905	MOTOR NOM VOLT	Defines the nominal motor voltage.	200 V units: 230 V 400 V E units: 400 V 400 V U units: 460 V
9906	MOTOR NOM CURR	Defines the nominal motor current.	I_{2N}
9907	MOTOR NOM FREQ	Defines the nominal motor frequency.	E: 50.0 Hz U: 60.0 Hz
9908	MOTOR NOM SPEED	Defines the nominal motor speed.	Type dependent
9909	MOTOR NOM POWER	Defines the nominal motor power.	P_N

All actual signals

All actual signals			
No.	**Name/Value**	**Description**	**FbEq**
01 OPERATING DATA		Basic signals for monitoring the drive (read-only)	
0101	SPEED & DIR	Calculated motor speed in rpm. A negative value indicates reverse direction.	1 = 1 rpm
0102	SPEED	Calculated motor speed in rpm	1 = 1 rpm
0103	OUTPUT FREQ	Calculated drive output frequency in Hz. (Shown by default on the panel Output mode display.)	1 = 0.1 Hz
0104	CURRENT	Measured motor current in A. (Shown by default on the panel Output mode display.)	1 = 0.1 A
0105	TORQUE	Calculated motor torque in percent of the nominal motor torque	1 = 0.1%
0106	POWER	Measured motor power in kW	1 = 0.1 kW
0107	DC BUS VOLTAGE	Measured intermediate circuit voltage in V DC	1 = 1 V
0109	OUTPUT VOLTAGE	Calculated motor voltage in V AC	1 = 1 V
0110	DRIVE TEMP	Measured IGBT temperature in °C	1 = 0.1 °C
0111	EXTERNAL REF 1	External reference REF1 in Hz	1 = 0.1 Hz
0112	EXTERNAL REF 2	External reference REF2 in percent. Depending on the use, 100% equals the maximum motor speed, nominal motor torque, or maximum process reference.	1 = 0.1%
0113	CTRL LOCATION	Active control location. (0) LOCAL; (1) EXT1; (2) EXT2. See section *Local control vs. external control* on page *117*.	1 = 1
0114	RUN TIME (R)	Elapsed drive running time counter (hours). Runs when the drive is modulating. The counter can be reset by pressing the UP and DOWN keys simultaneously when the control panel is in the Parameter mode.	1 = 1 h
0115	KWH COUNTER (R)	kWh counter. The counter value is accumulated until it reaches 65535 after which the counter rolls over and starts again from 0. The counter can be reset by pressing UP and DOWN keys simultaneously when the control panel is in the Parameter mode.	1 = 1 kWh
0116	APPL BLK OUTPUT	Application block output signal. Value is either from PFC control, if PFC control is active, or from signal *0112 EXTERNAL REF 2*.	1 = 0.1%
0120	AI 1	Relative value of analog input AI1 in percent	1 = 0.1%
0121	AI 2	Relative value of analog input AI2 in percent	1 = 0.1%
0124	AO 1	Value of analog output AO in mA	1 = 0.1 mA
0126	PID 1 OUTPUT	Output value of the process PID1 controller in percent	1 = 0.1%
0127	PID 2 OUTPUT	Output value of the PID2 controller in percent	1 = 0.1%
0128	PID 1 SETPNT	Setpoint signal (reference) for the process PID1 controller. Unit depends on parameter *4006 UNITS*, *4007 UNIT SCALE* and *4027 PID 1 PARAM SET* settings.	-

All actual signals			
No.	**Name/Value**	**Description**	**FbEq**
0129	PID 2 SETPNT	Setpoint signal (reference) for the PID2 controller. Unit depends on parameter *4106 UNITS* and *4107 UNIT SCALE* settings.	-
0130	PID 1 FBK	Feedback signal for the process PID1 controller. Unit depends on parameter *4006 UNITS*, *4007 UNIT SCALE* and *4027 PID 1 PARAM SET* settings.	-
0131	PID 2 FBK	Feedback signal for the PID2 controller. Unit depends on parameter *4106 UNITS* and *4107 UNIT SCALE* settings.	-
0132	PID 1 DEVIATION	Deviation of the process PID1 controller, ie the difference between the reference value and the actual value. Unit depends on parameter *4006 UNITS*, *4007 UNIT SCALE* and *4027 PID 1 PARAM SET* settings.	-
0133	PID 2 DEVIATION	Deviation of the PID2 controller, ie the difference between the reference value and the actual value. Unit depends on parameter *4106 UNITS* and *4107 UNIT SCALE* settings.	-
0134	COMM RO WORD	Relay output Control word through fieldbus (decimal). See parameter *1401 RELAY OUTPUT 1*.	1 = 1
0135	COMM VALUE 1	Data received from fieldbus	1 = 1
0136	COMM VALUE 2	Data received from fieldbus	1 = 1
0137	PROCESS VAR 1	Process variable 1 defined by parameter group *34 PANEL DISPLAY*	-
0138	PROCESS VAR 2	Process variable 2 defined by parameter group *34 PANEL DISPLAY*	-
0139	PROCESS VAR 3	Process variable 3 defined by parameter group *34 PANEL DISPLAY*	-
0140	RUN TIME	Elapsed drive running time counter (thousands of hours). Runs when the drive is modulating. Counter cannot be reset.	1 = 0.01 kh
0141	MWH COUNTER	MWH counter. The counter value is accumulated till it reaches 65535 after which the counter rolls over and starts again from 0. Cannot be reset.	1 = 1 MWh
0142	REVOLUTION CNTR	Motor revolution counter (millions of revolutions). The counter can be reset by pressing UP and DOWN keys simultaneously when the control panel is in the Parameter mode.	1 = 1 Mrev
0143	DRIVE ON TIME HI	Drive control board power-on time in days. Counter cannot be reset.	1 = 1 days
0144	DRIVE ON TIME LO	Drive control board power-on time in 2 second ticks (30 ticks = 60 seconds). Counter cannot be reset.	1 = 2 s
0145	MOTOR TEMP	Measured motor temperature. Unit depends on the sensor type selected by group *35 MOTOR TEMP MEAS* parameters.	1 = 1
0158	PID COMM VALUE 1	Data received from fieldbus for PID control (PID1 and PID2)	1 = 1
0159	PID COMM VALUE 2	Data received from fieldbus for PID control (PID1 and PID2)	1 = 1
0160	DI 1-5 STATUS	Status of digital inputs. **Example:** 10000 = DI1 is on, DI2…DI5 are off.	

All actual signals			
No.	**Name/Value**	**Description**	**FbEq**
0161	PULSE INPUT FREQ	Value of frequency input in Hz	1 = 1 Hz
0162	RO STATUS	Status of relay output 1. 1 = RO is energized, 0 = RO is de-energized.	1 = 1
0163	TO STATUS	Status of transistor output, when transistor output is used as a digital output.	1 = 1
0164	TO FREQUENCY	Transistor output frequency, when transistor output is used as a frequency output.	1 = 1 Hz
0173	RO 2-4 STATUS	Status of the relays in the MREL relay output extension module. See *MREL-01 relay output extension module user's manual* (3AUA0000035974 [English]). **Example:** 100 = RO 2 is on, RO 3 and RO 4 are off.	
0174	SAVED KWH	Energy saved in kWh compared to the energy used when the pump is connected directly to the supply. See the note on page *248*. The counter value is accumulated till it reaches 999.9, after which the counter rolls over and starts again from 0.0, and the counter value of signal *0175* is incremented by one. Can be reset with parameter *4509 ENERGY RESET* (resets all energy calculators at the same time). See group *45 ENERGY SAVING*.	1 = 0.1 kWh
0175	SAVED MWH	Energy saved in MWh compared to the energy used when the pump is connected directly to the supply. See the note on page *248*. The counter value is accumulated till it reaches 65535, after which the counter rolls over and starts again from 0. Can be reset with parameter *4509 ENERGY RESET* (resets all energy calculators at the same time). See group *45 ENERGY SAVING*.	1 = 1 MWh
0176	SAVED AMOUNT 1	Energy saved in local currency (remainder when the total saved energy is divided by 1000). See the note on page *248*. To find out the total saved energy in currency units, add the value of signal *0177* multiplied by 1000 to the value of signal *0176*. **Example:** *0176 SAVED AMOUNT 1* = 123.4 *0177 SAVED AMOUNT 2* = 5 Total saved energy = 5 · 1000 + 123.4 = 5123.4 currency units. The counter value is accumulated till it reaches 999.9, after which the counter rolls over and starts again from 0.0, and the counter value of signal *0177* is incremented by one. Can be reset with parameter *4509 ENERGY RESET* (resets all energy calculators at the same time). Local energy price is set with parameter *4502 ENERGY PRICE*. See group *45 ENERGY SAVING*.	1 = 0.1 (Currency)
0177	SAVED AMOUNT 2	Energy saved in local currency in thousand currency units. Eg value 5 means 5000 currency units. See the note on page *248*. The counter value is accumulated till it reaches 65535 (the counter does not roll over). See signal *0176 SAVED AMOUNT 1*.	1 = 1000 (Currency)

All actual signals			
No.	**Name/Value**	**Description**	**FbEq**
0178	SAVED CO2	Reduction in carbon dioxide emissions in tn. See the note on page *248*. The counter value is accumulated till it reaches 6553.5 (the counter does not roll over). Can be reset with parameter *4509 ENERGY RESET* (resets all energy calculators at the same time). CO_2 conversion factor is set with parameter *4507 CO2 CONV FACTOR*. See group *45 ENERGY SAVING*.	1 = 0.1 tn
03 FB ACTUAL SIGNALS		Data words for monitoring the fieldbus communication (read-only). Each signal is a 16-bit data word. Data words are displayed on the panel in hexadecimal format.	
0301	FB CMD WORD 1	A 16-bit data word. See section *DCU communication profile* on page *296*.	
0302	FB CMD WORD 2	A 16-bit data word. See section *DCU communication profile* on page *296*	
0303	FB STS WORD 1	A 16-bit data word. See section *DCU communication profile* on page *296*.	
0304	FB STS WORD 2	A 16-bit data word. See section *DCU communication profile* on page *296*	
0305	FAULT WORD 1	A 16-bit data word. For the possible causes and remedies and fieldbus equivalents, see chapter *Fault tracing* on page *301*.	
		Bit 0 = *OVERCURRENT*	
		Bit 1 = *DC OVERVOLT*	
		Bit 2 = *DEV OVERTEMP*	
		Bit 3 = *SHORT CIRC*	
		Bit 4 = Reserved	
		Bit 5 = *DC UNDERVOLT*	
		Bit 6 = *AI1 LOSS*	
		Bit 7 = *AI2 LOSS*	
		Bit 8 = *MOT OVERTEMP*	
		Bit 9 = *PANEL LOSS*	
		Bit 10 = Reserved	
		Bit 11 = *MOTOR STALL*	
		Bit 12 = Reserved	
		Bit 13 = *EXT FAULT 1*	
		Bit 14 = *EXT FAULT 2*	
		Bit 15 = *EARTH FAULT*	
0306	FAULT WORD 2	A 16-bit data word. For the possible causes and remedies and fieldbus equivalents, see chapter *Fault tracing* on page *301*.	
		Bit 0 = Reserved	
		Bit 1 = *THERM FAIL*	
		Bit 2…3 = Reserved	
		Bit 4 = *CURR MEAS*	

All actual signals			
No.	**Name/Value**	**Description**	**FbEq**
		Bit 5 = *SUPPLY PHASE*	
		Bit 6 = Reserved	
		Bit 7 = *OVERSPEED*	
		Bit 8 = Reserved	
		Bit 9 = *DRIVE ID*	
		Bit 10 = *CONFIG FILE*	
		Bit 11 = *SERIAL 1 ERR*	
		Bit 12 = *EFB CON FILE*	
		Bit 13 = *FORCE TRIP*	
		Bit 14 = Reserved	
		Bit 15 = *OUTP WIRING*	
0307	FAULT WORD 3	A 16-bit data word. For the possible causes and remedies and fieldbus equivalents, see chapter *Fault tracing* on page *301*.	
		Bit 0 = *EFB 1*	
		Bit 1 = *EFB 2*	
		Bit 2 = *EFB 3*	
		Bit 3 = *INCOMPATIBLE SW*	
		Bit 4 = *USER LOAD CURVE*	
		Bit 5 = *UNKNOWN EXTENSION*	
		Bit 6 = *INLET VERY LOW*	
		Bit 7 = *OUTLET VERY HIGH*	
		Bit 8 = *INLET LOW*	
		Bit 9 = *OUTLET HIGH*	
		Bit 10…14 = System error	
		Bit 15 = Parameter setting fault	
0308	ALARM WORD 1	A 16-bit data word. For the possible causes and remedies and fieldbus equivalents, see chapter *Fault tracing* on page *301*. An alarm can be reset by resetting the whole alarm word: Write zero to the word.	
		Bit 0 = *OVERCURRENT*	
		Bit 1 = *OVERVOLTAGE*	
		Bit 2 = *UNDERVOLTAGE*	
		Bit 3 = *DIR LOCK*	
		Bit 4 = *IO COMM*	
		Bit 5 = *AI1 LOSS*	
		Bit 6 = *AI2 LOSS*	
		Bit 7 = *PANEL LOSS*	
		Bit 8 = *DEVICE OVERTEMP*	
		Bit 9 = *MOTOR TEMP*	
		Bit 10 = Reserved	

All actual signals			
No.	**Name/Value**	**Description**	**FbEq**
		Bit 11 = *MOTOR STALL*	
		Bit 12 = *AUTORESET*	
		Bit 13 = *AUTOCHANGE*	
		Bit 14 = *PFC I LOCK*	
		Bit 15 = Reserved	
0309	ALARM WORD 2	A 16-bit data word. For the possible causes and remedies and fieldbus equivalents, see chapter *Fault tracing* on page *301*. An alarm can be reset by resetting the whole alarm word: Write zero to the word.	
		Bit 0 = Reserved	
		Bit 1 = *PID SLEEP*	
		Bit 2 = Reserved	
		Bit 3 = Reserved	
		Bit 4 = *START ENABLE 1 MISSING*	
		Bit 5 = *START ENABLE 2 MISSING*	
		Bit 6 = *EMERGENCY STOP*	
		Bit 7 = Reserved	
		Bit 8 = *FIRST START*	
		Bit 9 = Reserved	
		Bit 10 = *USER LOAD CURVE*	
		Bit 11 = *START DELAY*	
		Bit 12 = Reserved	
		Bit 13 = *INLET LOW*	
		Bit 14 = *OUTLET HIGH*	
		Bit 15 = *PIPE FILL*	
0310	ALARM WORD 3	A 16-bit data word. For the possible causes and remedies and fieldbus equivalents, see chapter *Fault tracing* on page *301*. An alarm can be reset by resetting the whole alarm word: Write zero to the word.	
		Bit 0 = *INLET VERY LOW*	
		Bit 1 = *OUTLET VERY HIGH*	
		Bit 2…15 = Reserved	
04 FAULT HISTORY		Fault history (read-only)	
0401	LAST FAULT	Code of the latest fault. See chapter *Fault tracing* on page *301* for the codes. 0 = Fault history is clear (on panel display = NO RECORD).	1 = 1
0402	FAULT TIME 1	Day on which the latest fault occurred. Format: Date if the real time clock is operating. / The number of days elapsed after the power-on if the real time clock is not used, or was not set.	1 = 1 days

All actual signals			
No.	**Name/Value**	**Description**	**FbEq**
0403	FAULT TIME 2	Time at which the latest fault occurred. Format on the assistant control panel: Real time (hh:mm:ss) if the real time clock is operating. / Time elapsed after the power-on (hh:mm:ss minus the whole days stated by signal *0402 FAULT TIME 1*) if real time clock is not used, or was not set. Format on the basic control panel: Time elapsed after power-on in 2-second ticks (minus the whole days stated by signal *0402 FAULT TIME 1*). 30 ticks = 60 seconds. Eg value 514 equals 17 minutes and 8 seconds (= 514/30).	
0404	SPEED AT FLT	Motor speed in rpm at the time the latest fault occurred	1 = 1 rpm
0405	FREQ AT FLT	Frequency in Hz at the time the latest fault occurred	1 = 0.1 Hz
0406	VOLTAGE AT FLT	Intermediate circuit voltage in V DC at the time the latest fault occurred	1 = 0.1 V
0407	CURRENT AT FLT	Motor current in A at the time the latest fault occurred	1 = 0.1 A
0408	TORQUE AT FLT	Motor torque in percent of the nominal motor torque at the time the latest fault occurred	1 = 0.1%
0409	STATUS AT FLT	Drive status in hexadecimal format at the time the latest fault occurred	
0412	PREVIOUS FAULT 1	Fault code of the 2nd latest fault. See chapter *Fault tracing* on page *301* for the codes.	1 = 1
0413	PREVIOUS FAULT 2	Fault code of the 3rd latest fault. See chapter *Fault tracing* on page *301* for the codes.	1 = 1
0414	DI 1-5 AT FLT	Status of digital inputs DI1…5 at the time the latest fault occurred (binary). **Example:** 10000 = DI1 is on, DI2…DI5 are off.	

All parameters

All parameters			
No.	**Name/Value**	**Description**	**Def/FbEq**
10 START/STOP/DIR		The sources for external start, stop and direction control	
1001	EXT1 COMMANDS	Defines the connections and the source for the start, stop and direction commands for external control location 1 (EXT1).	*DI1,2*
	NOT SEL	No start, stop and direction command source	0
	DI1	Start and stop through digital input DI1. 0 = stop, 1 = start. Direction is fixed according to parameter *1003 DIRECTION* (setting *REQUEST* = *FORWARD*).	1
	DI1,2	Start and stop through digital input DI1. 0 = stop, 1 = start. Direction through digital input DI2. 0 = forward, 1 = reverse. To control direction, parameter *1003 DIRECTION* setting must be *REQUEST*.	2
	DI1P,2P	Pulse start through digital input DI1. 0 -> 1: Start. (In order to start the drive, digital input DI2 must be activated prior to the pulse fed to DI1.) Pulse stop through digital input DI2. 1 -> 0: Stop. Direction of rotation is fixed according to parameter *1003 DIRECTION* (setting *REQUEST* = *FORWARD*). **Note:** When the stop input (DI2) is deactivated (no input), the control panel start and stop keys are disabled.	3
	DI1P,2P,3	Pulse start through digital input DI1. 0 -> 1: Start. (In order to start the drive, digital input DI2 must be activated prior to the pulse fed to DI1.) Pulse stop through digital input DI2. 1 -> 0: Stop. Direction through digital input DI3. 0 = forward, 1 = reverse. To control direction, parameter *1003 DIRECTION* setting must be *REQUEST*. **Note:** When the stop input (DI2) is deactivated (no input), the control panel start and stop keys are disabled.	4
	DI1P,2P,3P	Pulse start forward through digital input DI1. 0 -> 1: Start forward. Pulse start reverse through digital input DI2. 0 -> 1: Start reverse. (In order to start the drive, digital input DI3 must be activated prior to the pulse fed to DI1/DI2). Pulse stop through digital input DI3. 1 -> 0: Stop. To control the direction, parameter *1003 DIRECTION* setting must be *REQUEST*. **Note:** When the stop input (DI3) is deactivated (no input), the control panel start and stop keys are disabled.	5
	KEYPAD	Start, stop and direction commands through control panel when EXT1 is active. To control the direction, parameter *1003 DIRECTION* setting must be *REQUEST*.	8
	DI1F,2R	Start, stop and direction commands through digital inputs DI1 and DI2. **DI1 / DI2 / Operation** 0 / 0 / Stop 1 / 0 / Start forward 0 / 1 / Start reverse 1 / 1 / Stop Parameter *1003 DIRECTION* setting must be 3 (*REQUEST*).	9

All parameters			
No.	**Name/Value**	**Description**	**Def/FbEq**
	COMM	Fieldbus interface as the source for the start and stop commands, ie Control word *0301 FB CMD WORD 1* bits 0…1. The Control word is sent by the fieldbus controller through the embedded fieldbus (Modbus) to the drive. For the Control word bits, see section *DCU communication profile* on page *296*.	10
	TIMED FUNC 1	Timed start/stop control. Timed function 1 active = start, timed function 1 inactive = stop. See parameter group *36 TIMED FUNCTIONS*.	11
	TIMED FUNC 2	See selection *TIMED FUNC 1*.	12
	TIMED FUNC 3	See selection *TIMED FUNC 1*.	13
	TIMED FUNC 4	See selection *TIMED FUNC 1*.	14
	DI5	Start and stop through digital input DI5. 0 = stop, 1 = start. Direction is fixed according to parameter *1003 DIRECTION* (setting *REQUEST* = *FORWARD*).	20
	DI5,4	Start and stop through digital input DI5. 0 = stop, 1 = start. Direction through digital input DI4. 0 = forward, 1 = reverse. To control direction, parameter *1003 DIRECTION* must be *REQUEST*.	21
	SUPRV1 OVER	Start when the value of supervision parameter 1 goes over the supervision high limit. Stop when the value goes below the low limit. See parameter group *32 SUPERVISION*.	27
	SUPRV1 UNDER	Start when the value of the supervision parameter 1 goes below the supervision low limit. Stop when the value goes over the high limit. See parameter group *32 SUPERVISION*.	28
	SUPRV2 OVER	See selection *SUPRV1 OVER*.	29
	SUPRV2 UNDER	See selection *SUPRV1 UNDER*.	30
	SUPRV3 OVER	See selection *SUPRV1 OVER*.	31
	SUPRV3 UNDER	See selection *SUPRV1 UNDER*.	32
	SUP1OVER+ DI2	Start and stop as for *SUPRV1 OVER*. Direction through digital input DI2. 0 = forward, 1 = reverse. To control direction, parameter *1003 DIRECTION* setting must be *REQUEST*.	33
	SUP1 UDR+DI2	Start and stop as for *SUPRV1 UNDER*. Direction through digital input DI2. 0 = forward, 1 = reverse. To control direction, parameter *1003 DIRECTION* setting must be *REQUEST*.	34
1002	EXT2 COMMANDS	Defines the connections and the source for the start, stop and direction commands for external control location 2 (EXT2).	*NOT SEL*
		See parameter *1001 EXT1 COMMANDS*.	
1003	DIRECTION	Enables the control of rotation direction of the motor, or fixes the direction. **Note:** The Pump cleaning function can override this parameter. See parameter *4601 PUMP CLEAN TRIG*.	*REQUEST*
	FORWARD	Fixed to forward	1

All parameters			
No.	**Name/Value**	**Description**	**Def/FbEq**
	REVERSE	Fixed to reverse	2
	REQUEST	Control of rotation direction allowed	3
11 REFERENCE SELECT		Panel reference type, external control location selection and external reference sources and limits	
1101	KEYPAD REF SEL	Selects the type of the reference in the local control mode.	*REF1(Hz/rpm)*
	REF1(Hz/rpm)	Frequency reference in Hz	1
	REF2(%)	%-reference	2
1102	EXT1/EXT2 SEL	Defines the source from which the drive reads the signal that selects between the two external control locations, EXT1 or EXT2.	*EXT1*
	EXT1	EXT1 active. The control signal sources are defined by parameters *1001 EXT1 COMMANDS* and *1103 REF1 SELECT*.	0
	DI1	Digital input DI1. 0 = EXT1, 1 = EXT2.	1
	DI2	See selection *DI1*.	2
	DI3	See selection *DI1*.	3
	DI4	See selection *DI1*.	4
	DI5	See selection *DI1*.	5
	EXT2	EXT2 active. The control signal sources are defined by parameters *1002 EXT2 COMMANDS* and *1106 REF2 SELECT*.	7
	COMM	Fieldbus interface as the source for EXT1/EXT2 selection, ie Control word *0301 FB CMD WORD 1* bit 5 (with ABB drives profile *5319 EFB PAR 19* bit 11). The Control word is sent by the fieldbus controller through the embedded fieldbus (Modbus) to the drive. For the Control word bits, see sections *DCU communication profile* on page *296* and *ABB drives communication profile* on page *291*.	8
	TIMED FUNC 1	Timed EXT1/EXT2 control selection. Timed function 1 active = EXT2, timed function 1 inactive = EXT1. See parameter group *36 TIMED FUNCTIONS*.	9
	TIMED FUNC 2	See selection *TIMED FUNC 1*.	10
	TIMED FUNC 3	See selection *TIMED FUNC 1*.	11
	TIMED FUNC 4	See selection *TIMED FUNC 1*.	12
	DI1(INV)	Inverted digital input DI1. 1 = EXT1, 0 = EXT2.	-1
	DI2(INV)	See selection *DI1(INV)*.	-2
	DI3(INV)	See selection *DI1(INV)*.	-3
	DI4(INV)	See selection *DI1(INV)*.	-4
	DI5(INV)	See selection *DI1(INV)*.	-5
1103	REF1 SELECT	Selects the signal source for external reference REF1. See section *Block diagram: Reference source for EXT1* on page *119*.	*AI1*
	KEYPAD	Control panel	0
	AI1	Analog input AI1	1
	AI2	Analog input AI2	2

All parameters			
No.	**Name/Value**	**Description**	**Def/FbEq**
	AI1/JOYST	Analog input AI1 as joystick. The minimum input signal runs the motor at the maximum reference in the reverse direction, the maximum input at the maximum reference in the forward direction. Minimum and maximum references are defined by parameters *1104 REF1 MIN* and *1105 REF1 MAX*. **Note:** Parameter *1003 DIRECTION* must be set to *REQUEST*. 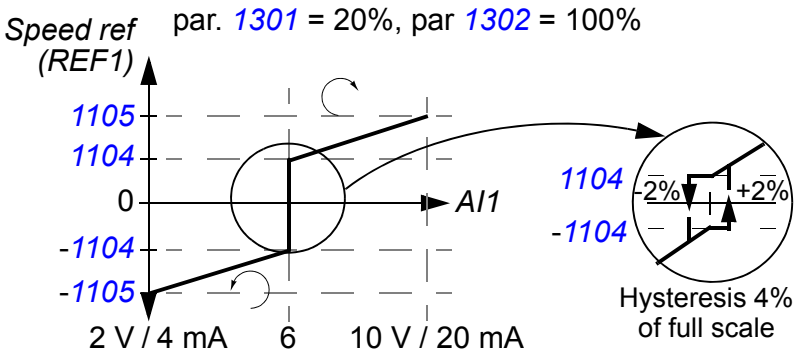 **WARNING!** If parameter *1301 MINIMUM AI1* is set to 0 V and analog input signal is lost (ie 0 V), the rotation of the motor is reversed to the maximum reference. Set the following parameters to activate a fault when analog input signal is lost: Set parameter *1301 MINIMUM AI1* to 20% (2 V or 4 mA). Set parameter *3021 AI1 FAULT LIMIT* to 5% or higher. Set parameter *3001 AI<MIN FUNCTION* to *FAULT*.	3
	AI2/JOYST	See selection *AI1/JOYST*.	4
	DI3U,4D(R)	Digital input DI3: Reference increase. Digital input DI4: Reference decrease. Stop command resets the reference to zero. Parameter *2205 ACCELER TIME 2* defines the rate of the reference change.	5
	DI3U,4D	Digital input DI3: Reference increase. Digital input DI4: Reference decrease. The program stores the active speed reference (not reset by a stop command). When the drive is restarted, the motor ramps up at the selected acceleration rate to the stored reference. Parameter *2205 ACCELER TIME 2* defines the rate of the reference change.	6
	COMM	Fieldbus reference REF1	8
	COMM+AI1	Summation of fieldbus reference REF1 and analog input AI. See section *Reference selection and correction* on page *284*.	9
	COMM*AI1	Multiplication of fieldbus reference REF1 and analog input AI1. See section *Reference selection and correction* on page *284*.	10
	DI3U,4D(RNC)	Digital input DI3: Reference increase. Digital input DI4: Reference decrease. Stop command resets the reference to zero. The reference is not saved if the control source is changed (from EXT1 to EXT2, from EXT2 to EXT1 or from LOC to REM). Parameter *2205 ACCELER TIME 2* defines the rate of the reference change.	11

All parameters			
No.	**Name/Value**	**Description**	**Def/FbEq**
	DI3U,4D(NC)	Digital input DI3: Reference increase. Digital input DI4: Reference decrease. The program stores the active speed reference (not reset by a stop command). The reference is not saved if the control source is changed (from EXT1 to EXT2, from EXT2 to EXT1 or from LOC to REM). When the drive is restarted, the motor ramps up at the selected acceleration rate to the stored reference. Parameter *2205 ACCELER TIME 2* defines the rate of the reference change.	12
	AI1+AI2	Reference is calculated with the following equation: REF = AI1(%) + AI2(%) - 50%	14
	AI1*AI2	Reference is calculated with the following equation: REF = AI1(%) · (AI2(%) / 50%)	15
	AI1-AI2	Reference is calculated with the following equation: REF = AI1(%) + 50% - AI2(%)	16
	AI1/AI2	Reference is calculated with the following equation: REF = AI1(%) · (50% / AI2 (%))	17
	KEYPAD(RNC)	Defines the control panel as the reference source. Stop command resets the reference to zero (the R stands for reset.). The reference is not saved if the control source is changed (from EXT1 to EXT2, from EXT2 to EXT1).	20
	KEYPAD(NC)	Defines the control panel as the reference source. Stop command does not reset the reference to zero. The reference is stored. The reference is not saved if the control source is changed (from EXT1 to EXT2, from EXT2 to EXT1).	21
	DI4U,5D	See selection *DI3U,4D*.	30
	DI4U,5D(NC)	See selection *DI3U,4D(NC)*.	31
	FREQ INPUT	Frequency input	32
1104	REF1 MIN	Defines the minimum value for external reference REF1. Corresponds to the minimum setting of the used source signal.	0.0 Hz
	0.0…500.0 Hz	Minimum value in Hz. **Example:** Analog input AI1 is selected as the reference source (value of parameter *1103* is *AI1*). The reference minimum and maximum correspond to the *1301 MINIMUM AI1* and *1302 MAXIMUM AI1* settings as follows: 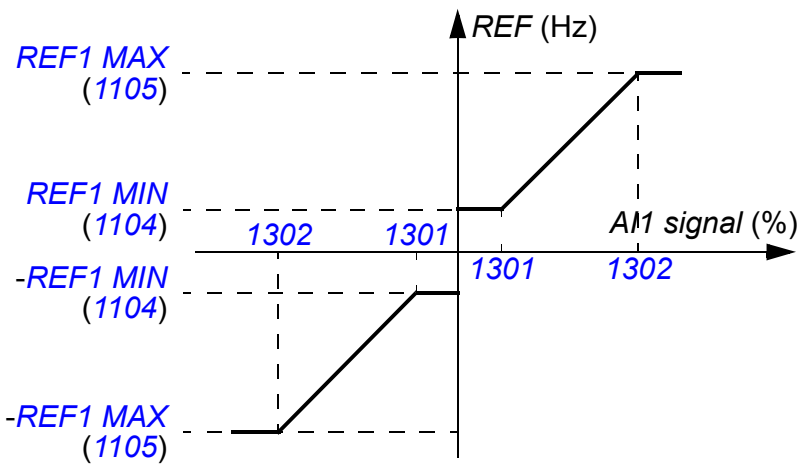 	1 = 0.1 Hz

All parameters			
No.	**Name/Value**	**Description**	**Def/FbEq**
1105	REF1 MAX	Defines the maximum value for external reference REF1. Corresponds to the maximum setting of the used source signal.	E: 50.0 Hz U: 60.0 Hz
	0.0…500.0 Hz	Maximum value in Hz. See the example for parameter *1104 REF1 MIN*.	1 = 0.1 Hz
1106	REF2 SELECT	Selects the signal source for external reference REF2.	*AI2*
	KEYPAD	See parameter *1103 REF1 SELECT*.	0
	AI1	See parameter *1103 REF1 SELECT*.	1
	AI2	See parameter *1103 REF1 SELECT*.	2
	AI1/JOYST	See parameter *1103 REF1 SELECT*.	3
	AI2/JOYST	See parameter *1103 REF1 SELECT*.	4
	DI3U,4D(R)	See parameter *1103 REF1 SELECT*.	5
	DI3U,4D	See parameter *1103 REF1 SELECT*.	6
	COMM	See parameter *1103 REF1 SELECT*.	8
	COMM+AI1	See parameter *1103 REF1 SELECT*.	9
	COMM*AI1	See parameter *1103 REF1 SELECT*.	10
	DI3U,4D(RNC)	See parameter *1103 REF1 SELECT*.	11
	DI3U,4D(NC)	See parameter *1103 REF1 SELECT*.	12
	AI1+AI2	See parameter *1103 REF1 SELECT*.	14
	AI1*AI2	See parameter *1103 REF1 SELECT*.	15
	AI1-AI2	See parameter *1103 REF1 SELECT*.	16
	AI1/AI2	See parameter *1103 REF1 SELECT*.	17
	PID1OUT	PID controller 1 output. See parameter groups *40 PROCESS PID SET 1* and *41 PROCESS PID SET 2*.	19
	KEYPAD(RNC)	See parameter *1103 REF1 SELECT*.	20
	KEYPAD(NC)	See parameter *1103 REF1 SELECT*.	21
	DI4U,5D	See parameter *1103 REF1 SELECT*.	30
	DI4U,5D(NC)	See parameter *1103 REF1 SELECT*.	31
	FREQ INPUT	See parameter *1103 REF1 SELECT*.	32
1107	REF2 MIN	Defines the minimum value for external reference REF2. Corresponds to the minimum setting of the used source signal.	0.0%
	0.0…100.0%	Value in percent of the maximum frequency / maximum speed / nominal torque. See the example for parameter *1104 REF1 MIN* for correspondence to the source signal limits.	1 = 0.1%
1108	REF2 MAX	Defines the maximum value for external reference REF2. Corresponds to the maximum setting of the used source signal.	100.0%
	0.0…100.0%	Value in percent of the maximum frequency / maximum speed / nominal torque. See the example for parameter *1104 REF1 MIN* for correspondence to the source signal limits.	1 = 0.1%

All parameters			
No.	**Name/Value**	**Description**	**Def/FbEq**
12 CONSTANT SPEEDS		Constant speed (drive output frequency) selection and values. See section *Constant speeds* on page *129*.	
1201	CONST SPEED SEL	Activates the constant speeds (drive output frequencies) or selects the activation signal.	*DI3,4*
	NOT SEL	No constant speed in use	0
	DI1	Speed defined by parameter *1202 CONST SPEED 1* is activated through digital input DI1. 1 = active, 0 = inactive.	1
	DI2	Speed defined by parameter *1202 CONST SPEED 1* is activated through digital input DI2. 1 = active, 0 = inactive.	2
	DI3	Speed defined by parameter *1202 CONST SPEED 1* is activated through digital input DI3. 1 = active, 0 = inactive.	3
	DI4	Speed defined by parameter *1202 CONST SPEED 1* is activated through digital input DI4. 1 = active, 0 = inactive.	4
	DI5	Speed defined by parameter *1202 CONST SPEED 1* is activated through digital input DI5. 1 = active, 0 = inactive.	5
	DI1,2	Constant speed selection through digital inputs DI1 and DI2.1 = DI active, 0 = DI inactive. **DI1 / DI2 / Operation** 0 / 0 / No constant speed 1 / 0 / Speed defined by par. *1202 CONST SPEED 1* 0 / 1 / Speed defined by par. *1203 CONST SPEED 2* 1 / 1 / Speed defined by par. *1204 CONST SPEED 3*	7
	DI2,3	See selection *DI1,2*.	8
	DI3,4	See selection *DI1,2*.	9
	DI4,5	See selection *DI1,2*.	10
	DI1,2,3	Constant speed selection through digital inputs DI1, DI2 and DI3. 1 = DI active, 0 = DI inactive. **DI / DI2 / DI3 / Operation** 0 / 0 / 0 / No constant speed 1 / 0 / 0 / Speed defined by par. *1202 CONST SPEED 1* 0 / 1 / 0 / Speed defined by par. *1203 CONST SPEED 2* 1 / 1 / 0 / Speed defined by par. *1204 CONST SPEED 3* 0 / 0 / 1 / Speed defined by par. *1205 CONST SPEED 4* 1 / 0 / 1 / Speed defined by par. *1206 CONST SPEED 5* 0 / 1 / 1 / Speed defined by par. *1207 CONST SPEED 6* 1 / 1 / 1 / Speed defined by par. *1208 CONST SPEED 7*	12
	DI3,4,5	See selection *DI1,2,3*.	13
	TIMED FUNC 1	External speed reference, speed defined by parameter *1202 CONST SPEED 1* or speed defined by parameter *1203 CONST SPEED 2* is used, depending on the selection of parameter *1209 TIMED MODE SEL* and the state of timed function 1. See parameter group *36 TIMED FUNCTIONS*.	15
	TIMED FUNC 2	See selection *TIMED FUNC 1*.	16
	TIMED FUNC 3	See selection *TIMED FUNC 1*.	17
	TIMED FUNC 4	See selection *TIMED FUNC 1*.	18

All parameters			
No.	**Name/Value**	**Description**	**Def/FbEq**
	TIMED FUN1&2	External speed reference or speed defined by parameter *1202 CONST SPEED 1* … *1205 CONST SPEED 4* is used, depending on the selection of parameter *1209 TIMED MODE SEL* and the state of timed functions 1 and 2. See parameter group *36 TIMED FUNCTIONS*.	19
	DI1(INV)	Speed defined by parameter *1202 CONST SPEED 1* is activated through inverted digital input DI1. 0 = active, 1 = inactive.	-1
	DI2(INV)	Speed defined by parameter *1202 CONST SPEED 1* is activated through inverted digital input DI2. 0 = active, 1 = inactive.	-2
	DI3(INV)	Speed defined by parameter *1202 CONST SPEED 1* is activated through inverted digital input DI3. 0 = active, 1 = inactive.	-3
	DI4(INV)	Speed defined by parameter *1202 CONST SPEED 1* is activated through inverted digital input DI4. 0 = active, 1 = inactive.	-4
	DI5(INV)	Speed defined by parameter *1202 CONST SPEED 1* is activated through inverted digital input DI5. 0 = active, 1 = inactive.	-5
	DI1,2(INV)	Constant speed selection through inverted digital inputs DI1 and DI2. 1 = DI active, 0 = DI inactive. **DI1 / DI2 / Operation** 1 / 1 / No constant speed 0 / 1 / Speed defined by par. *1202 CONST SPEED 1* 1 / 0 / Speed defined by par. *1203 CONST SPEED 2* 0 / 0 / Speed defined by par. *1204 CONST SPEED 3*	-7
	DI2,3(INV)	See selection *DI1,2(INV)*.	-8
	DI3,4(INV)	See selection *DI1,2(INV)*.	-9
	DI4,5(INV)	See selection *DI1,2(INV)*.	-10
	DI1,2,3(INV)	Constant speed selection through inverted digital inputs DI1, DI2 and DI3. 1 = DI active, 0 = DI inactive. **DI / DI2 / DI3 / Operation** 1 / 1 / 1 / No constant speed 0 / 1 / 1 / Speed defined by par. *1202 CONST SPEED 1* 1 / 0 / 1 / Speed defined by par. *1203 CONST SPEED 2* 0 / 0 / 1 / Speed defined by par. *1204 CONST SPEED 3* 1 / 1 / 0 / Speed defined by par. *1205 CONST SPEED 4* 0 / 1 / 0 / Speed defined by par. *1206 CONST SPEED 5* 1 / 0 / 0 / Speed defined by par. *1207 CONST SPEED 6* 0 / 0 / 0 / Speed defined by par. *1208 CONST SPEED 7*	-12
	DI3,4,5(INV)	See selection *DI1,2,3(INV)*.	-13
1202	CONST SPEED 1	Defines constant speed (drive output frequency) 1.	E: 5.0 Hz U: 6.0 Hz
	0.0…500.0 Hz	Output frequency in Hz	1 = 0.1 Hz
1203	CONST SPEED 2	Defines constant speed (drive output frequency) 2.	E: 10.0 Hz U: 12.0 Hz

All parameters			
No.	**Name/Value**	**Description**	**Def/FbEq**
	0.0…500.0 Hz	Output frequency in Hz	1 = 0.1 Hz
1204	CONST SPEED 3	Defines constant speed (drive output frequency) 3.	E: 15.0 Hz U: 18.0 Hz
	0.0…500.0 Hz	Output frequency in Hz	1 = 0.1 Hz
1205	CONST SPEED 4	Defines constant speed (drive output frequency) 4.	E: 20.0 Hz U: 24.0 Hz
	0.0…500.0 Hz	Output frequency in Hz	1 = 0.1 Hz
1206	CONST SPEED 5	Defines constant speed (drive output frequency) 5.	E: 25.0 Hz U: 30.0 Hz
	0.0…500.0 Hz	Output frequency in Hz	1 = 0.1 Hz
1207	CONST SPEED 6	Defines constant speed (drive output frequency) 6.	E: 40.0 Hz U: 48.0 Hz
	0.0…500.0 Hz	Output frequency in Hz	1 = 0.1 Hz
1208	CONST SPEED 7	Defines constant speed (drive output frequency) 7. Constant speed 7 is used also with fault functions (*3001 AI<MIN FUNCTION* and *3002 PANEL COMM ERR*).	E: 50.0 Hz U: 60.0 Hz
	0.0…500.0 Hz	Output frequency in Hz	1 = 0.1 Hz
1209	TIMED MODE SEL	Selects timed function activated speed. Timed function can be used to change between the external reference and constant speeds when parameter *1201 CONST SPEED SEL* selection is *TIMED FUNC 1* … *TIMED FUNC 4* or *TIMED FUN1&2*.	*CS1/2/3/4*
	EXT/CS1/2/3	When parameter *1201 CONST SPEED SEL* = *TIMED FUNC 1* … *TIMED FUNC 4*, this timed function selects an external speed reference or constant speed. 1 = timed function active, 0 = timed function inactive. **Timed function 1…4** / **Operation** 0 / External reference 1 / Speed defined by par. *1202 CONST SPEED 1* When parameter *1201 CONST SPEED SEL* = *TIMED FUN1&2*, timed functions 1 and 2 select an external speed reference or constant speed. 1 = timed function active, 0 = timed function inactive. **Timed function 1** / **Timed function 2** / **Operation** 0 / 0 / External reference 1 / 0 / Speed defined by par. *1202 CONST SPEED 1* 0 / 1 / Speed defined by par. *1203 CONST SPEED 2* 1 / 1 / Speed defined by par. *1204 CONST SPEED 3*	1

All parameters			
No.	**Name/Value**	**Description**	**Def/FbEq**
	CS1/2/3/4	When parameter *1201 CONST SPEED SEL* = *TIMED FUNC 1* … *TIMED FUNC 4*, this timed function selects a constant speed. 1 = timed function active, 0 = timed function inactive. **Timed function 1…4** / **Operation**: 0 – Speed defined by parameter *1202 CONST SPEED 1* 1 – Speed defined by parameter *1203 CONST SPEED 2* When parameter *1201 CONST SPEED SEL* = *TIMED FUN1&2*, timed functions 1 and 2 select a constant speed. 1 = timed function active, 0 = timed function inactive. **Timed function 1** / **Timed function 2** / **Operation**: 0 / 0 – Speed defined by parameter *1202 CONST SPEED 1* 1 / 0 – Speed defined by parameter *1203 CONST SPEED 2* 0 / 1 – Speed defined by parameter *1204 CONST SPEED 3* 1 / 1 – Speed defined by parameter *1205 CONST SPEED 4*	2
13 ANALOG INPUTS		Analog input signal processing	
1301	MINIMUM AI1	Defines the minimum %-value that corresponds to minimum mA/(V) signal for analog input AI1. When used as a reference, the value corresponds to the reference minimum setting. 0…20 mA ≙ 0…100% 4…20 mA ≙ 20…100% -10…10 mA ≙ -50…50% **Example:** If AI1 is selected as the source for external reference REF1, this value corresponds to the value of parameter *1104 REF1 MIN*. **Note:** *MINIMUM AI1* value must not exceed *MAXIMUM AI1* value.	1.0%
	-100.0…100.0%	Value in percent of the full signal range. **Example:** If the minimum value for analog input is 4 mA, the percent value for 0…20 mA range is: (4 mA / 20 mA) · 100% = 20%	1 = 0.1%
1302	MAXIMUM AI1	Defines the maximum %-value that corresponds to maximum mA/(V) signal for analog input AI1. When used as a reference, the value corresponds to the reference maximum setting. 0…20 mA ≙ 0…100% 4…20 mA ≙ 20…100% -10…10 mA ≙ -50…50% **Example:** If AI1 is selected as the source for external reference REF1, this value corresponds to the value of parameter *1105 REF1 MAX*.	100.0%

All parameters			
No.	**Name/Value**	**Description**	**Def/FbEq**
	-100.0…100.0%	Value in percent of the full signal range. **Example:** If the maximum value for analog input is 10 mA, the percent value for 0…20 mA range is: (10 mA / 20 mA) · 100% = 50%	1 = 0.1%
1303	FILTER AI1	Defines the filter time constant for analog input AI1, that is, the time within which 63% of a step change is reached. 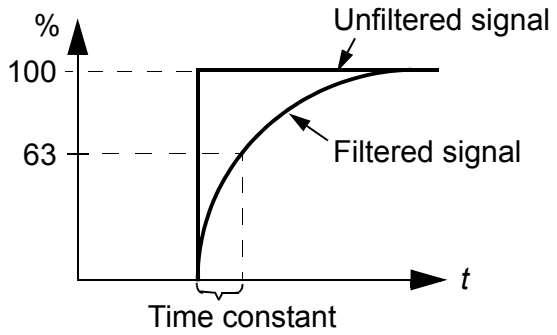 	0.1 s
	0.0…10.0 s	Filter time constant	1 = 0.1 s
1304	MINIMUM AI2	Defines the minimum %-value that corresponds to minimum mA/(V) signal for analog input AI2. See parameter *1301 MINIMUM AI1*.	1.0%
	-100.0…100.0%	See parameter *1301 MINIMUM AI1*.	1 = 0.1%
1305	MAXIMUM AI2	Defines the maximum %-value that corresponds to maximum mA/(V) signal for analog input AI2. See parameter *1302 MAXIMUM AI1*.	100.0%
	-100.0…100.0%	See parameter *1302 MAXIMUM AI1*.	1 = 0.1%
1306	FILTER AI2	Defines the filter time constant for analog input AI2. See parameter *1303 FILTER AI1*.	0.1 s
	0.0…10.0 s	Filter time constant	1 = 0.1 s
14 RELAY OUTPUTS		Status information indicated through relay output, and relay operating delays. **Note:** Relay outputs 2…4 are available only if the MREL relay output extension module is connected to the drive. See *MREL-01 relay output extension module user's manual* (3AUA0000035974 [English]).	
1401	RELAY OUTPUT 1	Selects a drive status indicated through relay output RO 1. The relay energizes when the status meets the setting.	*FAULT(-1)*
	NOT SEL	Not used	0
	READY	Ready to function: Run enable signal on, no fault, supply voltage within acceptable range and emergency stop signal off.	1
	RUN	Running: Start signal on, Run enable signal on, no active fault.	2
	FAULT(-1)	Inverted fault. Relay is de-energized on a fault trip.	3
	FAULT	Fault	4
	ALARM	Alarm	5
	REVERSED	Motor rotates in reverse direction.	6

All parameters			
No.	**Name/Value**	**Description**	**Def/FbEq**
	STARTED	The drive has received start command. Relay is energized even if Run enable signal is off. Relay is de-energized when drive receives a stop command or a fault occurs.	7
	SUPRV1 OVER	Status according to supervision parameters *3201*…*3203*. See parameter group *32 SUPERVISION*.	8
	SUPRV1 UNDER	See selection *SUPRV1 OVER*.	9
	SUPRV2 OVER	Status according to supervision parameters *3204*…*3206*. See parameter group *32 SUPERVISION*.	10
	SUPRV2 UNDER	See selection *SUPRV2 OVER*.	11
	SUPRV3 OVER	Status according to supervision parameters *3207*…*3209*. See parameter group *32 SUPERVISION*.	12
	SUPRV3 UNDER	See selection *SUPRV3 OVER*.	13
	AT SET POINT	Output frequency is equal to the reference frequency.	14
	FAULT(RST)	Fault. Automatic reset after the autoreset delay. See parameter group *31 AUTOMATIC RESET*.	15
	FLT/ALARM	Fault or alarm	16
	EXT CTRL	Drive is under external control.	17
	REF 2 SEL	External reference REF 2 is in use.	18
	CONST FREQ	A constant speed is in use. See parameter group *12 CONSTANT SPEEDS*.	19
	REF LOSS	Reference or active control location is lost.	20
	OVERCURRENT	Alarm/Fault by overcurrent protection function	21
	OVERVOLTAGE	Alarm/Fault by overvoltage protection function	22
	DRIVE TEMP	Alarm/Fault by drive overtemperature protection function	23
	UNDERVOLTAGE	Alarm/Fault by undervoltage protection function	24
	AI1 LOSS	Analog input AI1 signal is lost.	25
	AI2 LOSS	Analog input AI2 signal is lost.	26
	MOTOR TEMP	Alarm/Fault by motor overtemperature protection function. See parameter *3005 MOT THERM PROT*.	27
	STALL	Alarm/Fault by stall protection function. See parameter *3010 STALL FUNCTION*.	28
	PID SLEEP	PID sleep function. See parameter group *40 PROCESS PID SET 1* / *41 PROCESS PID SET 2*.	30
	PFC	Start/stop motor in PFC control. See parameter group *81 PFC CONTROL*. Use this option only when PFC control is used. Selection activated/deactivated when the drive is not running.	31
	AUTOCHANGE	PFC Autochange operation is performed. Use this option only when PFC control is used.	32
	FLUX READY	Motor is magnetized and able to supply nominal torque.	33

<table>
<tr><th colspan="4">All parameters</th></tr>
<tr><th>No.</th><th>Name/Value</th><th>Description</th><th>Def/FbEq</th></tr>
<tr><td></td><td>USER MACRO 2</td><td>User macro 2 is active.</td><td>34</td></tr>
<tr><td></td><td>COMM</td><td>Fieldbus control signal 0134 COMM RO WORD. 0 = de-energize output, 1 = energize output.
<table>
<tr><th>0134 value</th><th>Binary</th><th>RO4 (MREL)</th><th>RO3 (MREL)</th><th>RO2 (MREL)</th><th>DO</th><th>RO1</th></tr>
<tr><td>0</td><td>00000</td><td>0</td><td>0</td><td>0</td><td>0</td><td>0</td></tr>
<tr><td>1</td><td>00001</td><td>0</td><td>0</td><td>0</td><td>0</td><td>1</td></tr>
<tr><td>2</td><td>00010</td><td>0</td><td>0</td><td>0</td><td>1</td><td>0</td></tr>
<tr><td>3</td><td>00011</td><td>0</td><td>0</td><td>0</td><td>1</td><td>1</td></tr>
<tr><td>4</td><td>00100</td><td>0</td><td>0</td><td>1</td><td>0</td><td>0</td></tr>
<tr><td>5…30</td><td>…</td><td>…</td><td>…</td><td>…</td><td>…</td><td>…</td></tr>
<tr><td>31</td><td>11111</td><td>1</td><td>1</td><td>1</td><td>1</td><td>1</td></tr>
</table></td><td>35</td></tr>
<tr><td></td><td>COMM(-1)</td><td>Fieldbus control signal 0134 COMM RO WORD. 0 = de-energize output, 1 = energize output.
<table>
<tr><th>0134 value</th><th>Binary</th><th>RO4 (MREL)</th><th>RO3 (MREL)</th><th>RO2 (MREL)</th><th>DO</th><th>RO1</th></tr>
<tr><td>0</td><td>00000</td><td>1</td><td>1</td><td>1</td><td>1</td><td>1</td></tr>
<tr><td>1</td><td>00001</td><td>1</td><td>1</td><td>1</td><td>1</td><td>0</td></tr>
<tr><td>2</td><td>00010</td><td>1</td><td>1</td><td>1</td><td>0</td><td>1</td></tr>
<tr><td>3</td><td>00011</td><td>1</td><td>1</td><td>1</td><td>0</td><td>0</td></tr>
<tr><td>4</td><td>00100</td><td>1</td><td>1</td><td>0</td><td>1</td><td>1</td></tr>
<tr><td>5…30</td><td>…</td><td>…</td><td>…</td><td>…</td><td>…</td><td>…</td></tr>
<tr><td>31</td><td>11111</td><td>0</td><td>0</td><td>0</td><td>0</td><td>0</td></tr>
</table></td><td>36</td></tr>
<tr><td></td><td>TIMED FUNC 1</td><td>Timed function 1 is active. See parameter group 36 TIMED FUNCTIONS.</td><td>37</td></tr>
<tr><td></td><td>TIMED FUNC 2</td><td>Timed function 2 is active. See parameter group 36 TIMED FUNCTIONS.</td><td>38</td></tr>
<tr><td></td><td>TIMED FUNC 3</td><td>Timed function 3 is active. See parameter group 36 TIMED FUNCTIONS.</td><td>39</td></tr>
<tr><td></td><td>TIMED FUNC 4</td><td>Timed function 4 is active. See parameter group 36 TIMED FUNCTIONS.</td><td>40</td></tr>
<tr><td></td><td>M.TRIG FAN</td><td>Cooling fan running time counter is triggered. See parameter group 29 MAINTENANCE TRIG.</td><td>41</td></tr>
<tr><td></td><td>M.TRIG REV</td><td>Revolutions counter is triggered. See parameter group 29 MAINTENANCE TRIG.</td><td>42</td></tr>
<tr><td></td><td>M.TRIG RUN</td><td>Run time counter is triggered. See parameter group 29 MAINTENANCE TRIG.</td><td>43</td></tr>
<tr><td></td><td>M.TRIG MWH</td><td>MWh counter is triggered. See parameter group 29 MAINTENANCE TRIG.</td><td>44</td></tr>
<tr><td></td><td>START DELAY</td><td>Start delay is active.</td><td>46</td></tr>
<tr><td></td><td>USER LOAD C</td><td>Alarm/Fault from the user load curve. See parameter group 37 USER LOAD CURVE.</td><td>47</td></tr>
<tr><td></td><td>PIPE FILL</td><td>Pipe fill (Precharge) function is active. See parameters 4421…4426.</td><td>53</td></tr>
</table>

All parameters			
No.	**Name/Value**	**Description**	**Def/FbEq**
	PROFILE HIGH	Actual signal *0116 APPL BLK OUTPUT*, *0132 PID 1 DEVIATION* or *0133 PID 2 DEVIATION* has stayed over limit *4419 PROFILE OUTP LIM* longer than the time defined by parameter *4420 PROF LIMIT ON DLY*. See parameters *4418*…*4420*.	54
	INLET PROT	Pump inlet protection function is active or has caused the drive to trip. See parameters *4401*…*4408*.	55
	OUTLET PROT	Pump outlet protection function is active or has caused the drive to trip. See parameters *4409*…*4416*.	56
1402	RELAY OUTPUT 2	See parameter *1401 RELAY OUTPUT 1*. Available only if the MREL relay output extension module is connected to the drive.	*NOT SEL*
1403	RELAY OUTPUT 3	See parameter *1401 RELAY OUTPUT 1*. Available only if the MREL relay output extension module is connected to the drive.	*NOT SEL*
1404	RO 1 ON DELAY	Defines the operation delay for relay output RO 1.	0.0 s
	0.0…3600.0 s	Delay time. The figure below illustrates the operation (on) and release (off) delays for relay output RO. 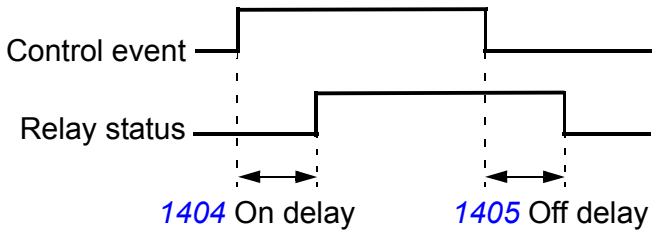	1 = 0.1 s
1405	RO 1 OFF DELAY	Defines the release delay for relay output RO 1.	0.0 s
	0.0…3600.0 s	Delay time. See the figure for parameter *1404 RO 1 ON DELAY*.	1 = 0.1 s
1406	RO 2 ON DELAY	See parameter *1404 RO 1 ON DELAY*.	0.0 s
1407	RO 2 OFF DELAY	See parameter *1405 RO 1 OFF DELAY*.	0.0 s
1408	RO 3 ON DELAY	See parameter *1404 RO 1 ON DELAY*.	0.0 s
1409	RO 3 OFF DELAY	See parameter *1405 RO 1 OFF DELAY*.	0.0 s
1410	RELAY OUTPUT 4	See parameter *1401 RELAY OUTPUT 1*. Available only if the MREL relay output extension module is connected to the drive.	*NOT SEL*
1413	RO 4 ON DELAY	See parameter *1404 RO 1 ON DELAY*.	0.0 s
1414	RO 4 OFF DELAY	See parameter *1405 RO 1 OFF DELAY*.	0.0 s
15 ANALOG OUTPUTS		Selection of the actual signals to be indicated through analog output and output signal processing.	
1501	AO1 CONTENT SEL	Connects a drive signal to analog output AO.	103

All parameters			
No.	**Name/Value**	**Description**	**Def/FbEq**
	x…x	Parameter index in group *01 OPERATING DATA*. Eg 102 = *0102 SPEED*.	
1502	AO1 CONTENT MIN	Defines the minimum value for the signal selected with parameter *1501 AO1 CONTENT SEL*. AO minimum and maximum correspond to the *1504 MINIMUM AO1* and *1505 MAXIMUM AO1* settings as follows: 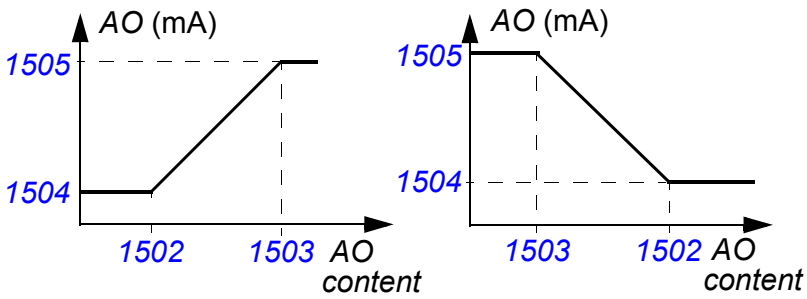 	-
	x…x	Setting range depends on the parameter *1501 AO1 CONTENT SEL* setting.	-
1503	AO1 CONTENT MAX	Defines the maximum value for the signal selected with parameter *1501 AO1 CONTENT SEL*. See the figure for parameter *1502 AO1 CONTENT MIN*.	-
	x…x	Setting range depends on the parameter *1501 AO1 CONTENT SEL* setting.	-
1504	MINIMUM AO1	Defines the minimum value for the analog output signal AO. See the figure for parameter *1502 AO1 CONTENT MIN*.	0.0 mA
	0.0…20.0 mA	Minimum value	1 = 0.1 mA
1505	MAXIMUM AO1	Defines the maximum value for the analog output signal AO. See the figure for parameter *1502 AO1 CONTENT MIN*.	20.0 mA
	0.0…20.0 mA	Maximum value	1 = 0.1 mA
1506	FILTER AO1	Defines the filter time constant for analog output AO, ie the time within which 63% of a step change is reached. See the figure for parameter *1303 FILTER AI1*.	0.1 s
	0.0…10.0 s	Filter time constant	1 = 0.1 s
16 SYSTEM CONTROLS		Parameter view, Run enable, parameter lock etc.	
1601	RUN ENABLE	Selects a source for the external Run enable signal.	*NOT SEL*
	NOT SEL	Allows the drive to start without an external Run enable signal.	0
	DI1	External signal required through digital input DI1. 1 = Run enable. If Run enable signal is switched off, the drive does not start or coasts to stop if it is running.	1
	DI2	See selection *DI1*.	2
	DI3	See selection *DI1*.	3
	DI4	See selection *DI1*.	4
	DI5	See selection *DI1*.	5

All parameters			
No.	**Name/Value**	**Description**	**Def/FbEq**
	COMM	Fieldbus interface as the source for inverted Run enable signal (Run disable), ie Control word *0301 FB CMD WORD 1* bit 6 (with ABB drives profile *5319 EFB PAR 19* bit 3). The Control word is sent by the fieldbus controller through the embedded fieldbus (Modbus) to the drive. For the Control word bits, see sections *DCU communication profile* on page *296* and *ABB drives communication profile* on page *291*.	7
	DI1(INV)	External signal required through inverted digital input DI1. 0 = Run enable. If Run enable signal is switched on, the drive does not start or coasts to stop if it is running.	-1
	DI2(INV)	See selection *DI1(INV)*.	-2
	DI3(INV)	See selection *DI1(INV)*.	-3
	DI4(INV)	See selection *DI1(INV)*.	-4
	DI5(INV)	See selection *DI1(INV)*.	-5
1602	PARAMETER LOCK	Selects the state of the parameter lock. The lock prevents parameter changing from the control panel.	*OPEN*
	LOCKED	Parameter values cannot be changed from the control panel. The lock can be opened by entering the valid code to parameter *1603 PASS CODE*. The lock does not prevent parameter changes made by macros or fieldbus.	0
	OPEN	The lock is open. Parameter values can be changed.	1
	NOT SAVED	Parameter changes from the control panel are not stored into the permanent memory. To store changed parameter values, set parameter *1607 PARAM SAVE* value to *SAVE...*.	2
1603	PASS CODE	Selects the pass code for the parameter lock (see parameter *1602 PARAMETER LOCK*).	0
	0…65535	Pass code. Setting 358 opens the lock. The value reverts back to 0 automatically.	1 = 1
1604	FAULT RESET SEL	Selects the source for the fault reset signal. The signal resets the drive after a fault trip if the cause of the fault no longer exists.	*KEYPAD*
	KEYPAD	Fault reset only from the control panel	0
	DI1	Reset through digital input DI1 (reset on the rising edge of DI1) or from the control panel	1
	DI2	See selection *DI1*.	2
	DI3	See selection *DI1*.	3
	DI4	See selection *DI1*.	4
	DI5	See selection *DI1*.	5
	START/STOP	Reset along with the stop signal received through a digital input, or from the control panel. **Note:** Do not use this option when start, stop and direction commands are received through fieldbus communication.	7

All parameters			
No.	**Name/Value**	**Description**	**Def/FbEq**
	COMM	Fieldbus interface as the source for the fault reset signal, ie Control word *0301 FB CMD WORD 1* bit 4 (with ABB drives profile *5319 EFB PAR 19* bit 7). The Control word is sent by the fieldbus controller through the embedded fieldbus (Modbus) to the drive. For the Control word bits, see sections *DCU communication profile* on page *296* and *ABB drives communication profile* on page *291*.	8
	DI1(INV)	Reset through inverted digital input DI1 (reset on the falling edge of DI1) or from the control panel	-1
	DI2(INV)	See selection *DI1(INV)*.	-2
	DI3(INV)	See selection *DI1(INV)*.	-3
	DI4(INV)	See selection *DI1(INV)*.	-4
	DI5(INV)	See selection *DI1(INV)*.	-5
1605	USER PAR SET CHG	Enables the change of the User parameter set through a digital input. See parameter *9902 APPLIC MACRO*. The change is only allowed when the drive is stopped. During the change, the drive does not start. **Note:** Always save the User parameter set with parameter *9902* after changing any parameter setting, or reperforming the motor identification. The last settings saved by the user are loaded into use whenever the power is switched off and on again or the parameter *9902* setting is changed. Any unsaved changes are lost. **Note:** The value of this parameter is not included in the User parameter sets. A setting once made remains despite User parameter set change. **Note:** Selection of User parameter set 2 can be supervised through relay outputs RO 1…4 and digital output DO. See parameters *1401 RELAY OUTPUT 1* … *1403 RELAY OUTPUT 3*, *1410 RELAY OUTPUT 4* and *1805 DO SIGNAL*.	*NOT SEL*
	NOT SEL	User parameter set change is not possible through a digital input. Parameter sets can be changed only from the control panel.	0
	DI1	User parameter set control through digital input DI1. Falling edge of digital input DI1: User parameter set 1 is loaded into use. Rising edge of digital input DI1: User parameter set 2 is loaded into use.	1
	DI2	See selection *DI1*.	2
	DI3	See selection *DI1*.	3
	DI4	See selection *DI1*.	4
	DI5	See selection *DI1*.	5
	DI1(INV)	User parameter set control through inverted digital input DI1. Falling edge of inverted digital input DI1: User parameter set 2 is loaded into use. Rising edge of inverted digital input DI1: User parameter set 1 is loaded into use.	-1
	DI2(INV)	See selection *DI1(INV)*.	-2
	DI3(INV)	See selection *DI1(INV)*.	-3
	DI4(INV)	See selection *DI1(INV)*.	-4
	DI5(INV)	See selection *DI1(INV)*.	-5

All parameters			
No.	**Name/Value**	**Description**	**Def/FbEq**
1606	LOCAL LOCK	Disables entering the ocal control mode or selects the source for the local control mode lock signal. When local lock is active, entering the local control mode is disabled (LOC/REM key of the panel).	*NOT SEL*
	NOT SEL	Local control is allowed.	0
	DI1	Local control mode lock signal through digital input DI1. Rising edge of digital input DI1: Local control disabled. Falling edge of digital input DI1: Local control allowed.	1
	DI2	See selection *DI1*.	2
	DI3	See selection *DI1*.	3
	DI4	See selection *DI1*.	4
	DI5	See selection *DI1*.	5
	ON	Local control is disabled.	7
	COMM	Fieldbus interface as the source for the local lock, ie Control word *0301 FB CMD WORD 1* bit 14. The Control word is sent by the fieldbus controller through the embedded fieldbus (Modbus) to the drive. For the Control word bits, see section *DCU communication profile* on page *296*. **Note:** This setting applies only for the DCU profile.	8
	DI1(INV)	Local lock through inverted digital input DI1. Rising edge of inverted digital input DI1: Local control allowed. Falling edge of inverted digital input DI1: Local control disabled.	-1
	DI2(INV)	See selection *DI1(INV)*.	-2
	DI3(INV)	See selection *DI1(INV)*.	-3
	DI4(INV)	See selection *DI1(INV)*.	-4
	DI5(INV)	See selection *DI1(INV)*.	-5
1607	PARAM SAVE	Saves the valid parameter values to the permanent memory. **Note:** A new parameter value of a standard macro is saved automatically when changed from the panel but not when altered through a fieldbus connection.	*DONE*
	DONE	Saving completed	0
	SAVE...	Saving in progress	1

All parameters			
No.	**Name/Value**	**Description**	**Def/FbEq**
1608	START ENABLE 1	Selects the source for the Start enable 1 signal. **Note:** Functionality of the Start enable signal is different from the Run enable signal. **Example:** External damper control application using Start enable and Run enable. Motor can start only after the damper is fully open. 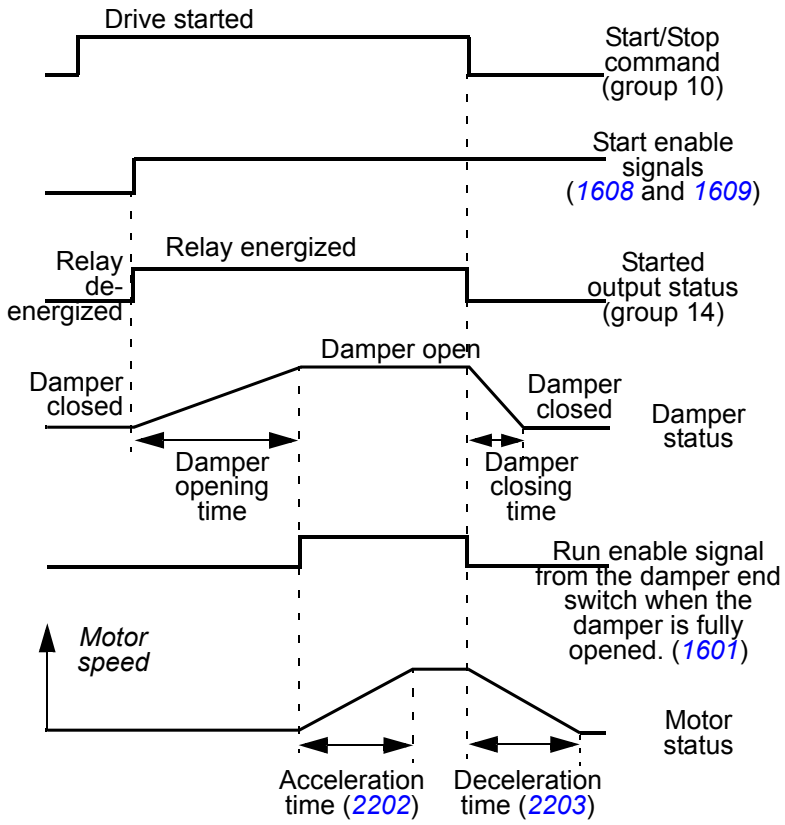 	*NOT SEL*
	NOT SEL	Start enable signal is on.	0
	DI1	External signal required through digital input DI1. 1 = Start enable. If Start enable signal is switched off, the drive does not start or it coasts to stop if it is running and alarm *START ENABLE 1 MISSING* is activated	1
	DI2	See selection *DI1*.	2
	DI3	See selection *DI1*.	3
	DI4	See selection *DI1*.	4
	DI5	See selection *DI1*.	5
	COMM	Fieldbus interface as the source for the inverted Start enable (Start disable) signal, ie Control word *0302 FB CMD WORD 2* bit 18 (bit 19 for Start enable 2). The Control word is sent by the fieldbus controller through the embedded fieldbus (Modbus) to the drive. For the Control word bits, see section *DCU communication profile* on page *296*. **Note:** This setting applies only for the DCU profile.	7
	DI1(INV)	External signal required through inverted digital input DI1. 0 = Start enable. If Start enable signal is switched off, the drive does not start or it coasts to stop if it is running and alarm *START ENABLE 1 MISSING* is activated.	-1

All parameters			
No.	**Name/Value**	**Description**	**Def/FbEq**
	DI2(INV)	See selection *DI1(INV)*.	-2
	DI3(INV)	See selection *DI1(INV)*.	-3
	DI4(INV)	See selection *DI1(INV)*.	-4
	DI5(INV)	See selection *DI1(INV)*.	-5
1609	START ENABLE 2	Selects the source for the Start enable 2 signal. See parameter *1608 START ENABLE 1*.	*NOT SEL*
		See parameter *1608 START ENABLE 1*.	
1610	DISPLAY ALARMS	Activates/deactivates alarms *OVERCURRENT* (*2001*), *OVERVOLTAGE* (*2002*), *UNDERVOLTAGE* (*2003*) and *DEVICE OVERTEMP* (*2009*). For more information, see chapter *Fault tracing* on page *301*.	NO
	NO	Alarms are inactive.	0
	YES	Alarms are active.	1
1611	PARAMETER VIEW	Selects the parameter view, ie which parameters are shown on the control panel. **Note:** For embedded modbus, LONG VIEW (3) must be selected.	*SHORT VIEW*
	FLASHDROP	Shows the FlashDrop parameter list. Does not include the short parameter list. Parameters which are hidden by the FlashDrop device are not visible. FlashDrop is designed for fast copying of parameters to unpowered drives. It allows easy customization of the parameter list, eg selected parameters can be hidden. For more information, see *MFDT-01 FlashDrop user's manual* (3AFE68591074 [English]). FlashDrop parameter values are activated by setting parameter *9902 APPLIC MACRO* to 31 (*LOAD FD SET*).	1
	SHORT VIEW	Shows only a subset of all signals and parameters. See section *Actual signals in the short parameter view* on page *162* and *Parameters in the short parameter view* on page *162*.	2
	LONG VIEW	Shows all signals (section *All actual signals* on page *164*) and parameters (this table, starting on page *171*).	3
18 FREQ IN & TRAN OUT		Frequency input and transistor output signal processing.	
1801	FREQ INPUT MIN	Defines the minimum input value when DI5 is used as a frequency input. See section *Frequency input* on page *125*.	0 Hz
	0…16000 Hz	Minimum frequency	1 = 1 Hz
1802	FREQ INPUT MAX	Defines the maximum input value when DI5 is used as a frequency input. See section *Frequency input* on page *125*.	1000 Hz
	0…16000 Hz	Maximum frequency	1 = 1 Hz
1803	FILTER FREQ IN	Defines the filter time constant for frequency input, that is, the time within which 63% of a step change is reached. See section *Frequency input* on page *125*.	0.1 s
	0.0…10.0 s	Filter time constant	1 = 0.1 s
1804	TO MODE	Selects the operation mode for the transistor output TO. See section *Transistor output* on page *126*.	*DIGITAL*
	DIGITAL	Transistor output is used as a digital output DO.	0

All parameters			
No.	**Name/Value**	**Description**	**Def/FbEq**
	FREQUENCY	Transistor output is used as a frequency output FO.	1
1805	DO SIGNAL	Selects a drive status indicated through digital output DO.	*FAULT(-1)*
		See parameter *1401 RELAY OUTPUT 1*.	
1806	DO ON DELAY	Defines the operation delay for digital output DO.	0.0 s
	0.0…3600.0 s	Delay time	1 = 0.1 s
1807	DO OFF DELAY	Defines the release delay for digital output DO.	0.0 s
	0.0…3600.0 s	Delay time	1 = 0.1 s
1808	FO CONTENT SEL	Selects a drive signal to be connected to frequency output FO.	104
	x…x	Parameter index in group *01 OPERATING DATA*. Eg 102 = *0102 SPEED*.	
1809	FO CONTENT MIN	Defines the minimum frequency output FO signal value. Signal is selected with parameter *1808 FO CONTENT SEL*. FO minimum and maximum correspond to *1811 MINIMUM FO* and *1812 MAXIMUM FO* settings as follows: 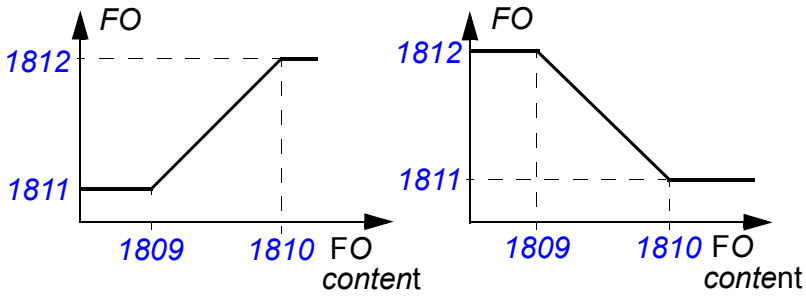	-
	x…x	Setting range depends on parameter *1808 FO CONTENT SEL* setting.	-
1810	FO CONTENT MAX	Defines the maximum frequency output FO signal value. Signal is selected with parameter *1808 FO CONTENT SEL*. See parameter *1809 FO CONTENT MIN*.	-
	x…x	Setting range depends on parameter *1808 FO CONTENT SEL* setting.	-
1811	MINIMUM FO	Defines the minimum value for frequency output FO.	10 Hz
	10…16000 Hz	Minimum frequency. See parameter *1809 FO CONTENT MIN*.	1 = 1 Hz
1812	MAXIMUM FO	Defines the maximum value for frequency output FO.	1000 Hz
	10…16000 Hz	Maximum frequency. See parameter *1809 FO CONTENT MIN*.	1 = 1 Hz
1813	FILTER FO	Defines the filter time constant for frequency output FO, ie the time within which 63% of a step change is reached.	0.1 s
	0.0…10.0 s	Filter time constant	1 = 0.1 s
1814	DI1 ON DELAY	Defines the delay from the signal change to the change of the digital input DI to the ON state.	0.0 s
	0.0…3600.0 s	Delay time	1 = 0.1 s
1815	DI1 OFF DELAY	Defines the delay from the signal change to the change of the digital input DI to the OFF state.	0.0 s

All parameters			
No.	**Name/Value**	**Description**	**Def/FbEq**
	0.0…3600.0 s	Delay time	1 = 0.1 s
1816	DI2 ON DELAY	See parameter *1814 DI1 ON DELAY*.	0.0 s
1817	DI2 OFF DELAY	See parameter *1815 DI1 OFF DELAY*.	0.0 s
1818	DI3 ON DELAY	See parameter *1814 DI1 ON DELAY*.	0.0 s
1819	DI3 OFF DELAY	See parameter *1815 DI1 OFF DELAY*.	0.0 s
1820	DI4 ON DELAY	See parameter *1814 DI1 ON DELAY*.	0.0 s
1821	DI4 OFF DELAY	See parameter *1815 DI1 OFF DELAY*.	0.0 s
1822	DI5 ON DELAY	See parameter *1814 DI1 ON DELAY*.	0.0 s
1823	DI5 OFF DELAY	See parameter *1815 DI1 OFF DELAY*.	0.0 s
20 LIMITS		Drive operation limits	
2003	MAX CURRENT	Defines the allowed maximum motor current.	$1.6 \cdot I_{2N}$
	0.0…$1.6 \cdot I_{2N}$ A	Current	1 = 0.1 A
2005	OVERVOLT CTRL	Activates or deactivates the overvoltage control of the intermediate DC link. Fast braking of a high inertia load causes the voltage to rise to the overvoltage control limit. To prevent the DC voltage from exceeding the limit, the overvoltage controller automatically decreases the braking torque.	*ENABLE*
	DISABLE	Overvoltage control deactivated	0
	ENABLE	Overvoltage control activated	1
2006	UNDERVOLT CTRL	Activates or deactivates the undervoltage control of the intermediate DC link. If the DC voltage drops due to input power cut off, the undervoltage controller automatically decreases the motor speed in order to keep the voltage above the lower limit. By decreasing the motor speed, the inertia of the load causes regeneration back into the drive, keeping the DC link charged and preventing an undervoltage trip until the motor coasts to stop. This acts as a power-loss ride-through functionality in systems with a high inertia, such as a centrifuge or a fan. See section *Power loss ride-through* on page *127*.	*ENABLE(TIME)*
	DISABLE	Undervoltage control deactivated	0
	ENABLE(TIME)	Undervoltage control activated. The undervoltage control is active for 500 ms.	1
	ENABLE	Undervoltage control activated. No operation time limit.	2

All parameters			
No.	**Name/Value**	**Description**	**Def/FbEq**
2007	MINIMUM FREQ	Defines the minimum limit for the drive output frequency. A positive (or zero) minimum frequency value defines two ranges, one positive and one negative. A negative minimum frequency value defines one speed range. **Note:** *MINIMUM FREQ* ≤ *MAXIMUM FREQ*. 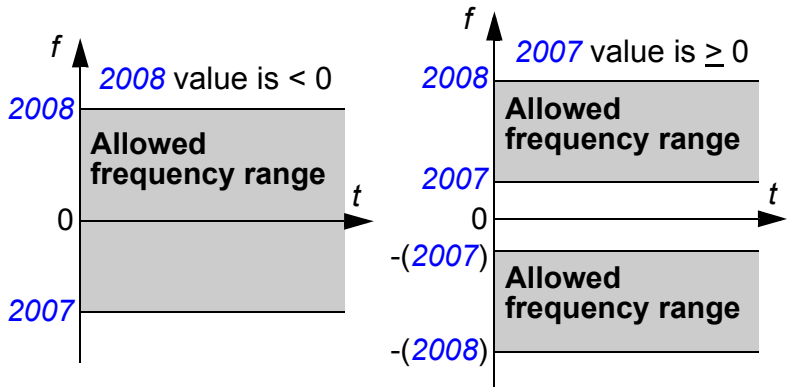 	0.0 Hz
	-500.0…500.0 Hz	Minimum frequency	1 = 0.1 Hz
2008	MAXIMUM FREQ	Defines the maximum limit for the drive output frequency.	E: 50.0 Hz U: 60.0 Hz
	0.0…500.0 Hz	Maximum frequency	1 = 0.1 Hz
21 START/STOP		Start and stop modes of the motor	
2101	START FUNCTION	Selects the motor starting method.	*AUTO*
	AUTO	The drive starts the motor instantly from zero frequency. If flying start is required, use selection *SCAN START*.	1
	DC MAGN	The drive pre-magnetizes the motor with DC current before the start. The pre-magnetizing time is defined by parameter *2103 DC MAGN TIME*. **Note:** Starting the drive connected to a rotating motor is not possible when *DC MAGN* is selected. ⚠ **WARNING!** The drive starts after the set pre-magnetizing time has passed even if the motor magnetization is not completed. In applications where a full break-away torque is essential, always ensure that the constant magnetizing time is long enough to allow generation of full magnetization and torque.	2

All parameters			
No.	**Name/Value**	**Description**	**Def/FbEq**
	TORQ BOOST	Torque boost should be selected if a high break-away torque is required. The drive pre-magnetizes the motor with DC current before the start. The pre-magnetizing time is defined by parameter *2103 DC MAGN TIME*. Torque boost is applied at start. Torque boost is stopped when output frequency exceeds 20 Hz or when it is equal to the reference value. See parameter *2110 TORQ BOOST CURR*. **Note:** Starting the drive connected to a rotating motor is not possible when *TORQ BOOST* is selected. ⚠ **WARNING!** The drive starts after the set pre-magnetizing time has passed although the motor magnetization is not completed. In applications where a full break-away torque is essential, always ensure that the constant magnetizing time is long enough to allow generation of full magnetization and torque.	4
	SCAN START	Frequency scanning flying start (starting the drive connected to a rotating motor). Based on frequency scanning (interval *2008 MAXIMUM FREQ*…*2007 MINIMUM FREQ*) to identify the frequency. If frequency identification fails, DC magnetization is used (see selection *DC MAGN*).	6
	SCAN + BOOST	Combines scanning start (starting the drive connected to a rotating motor) and torque boost. See selections *SCAN START* and *TORQ BOOST*. If frequency identification fails, torque boost is used.	7
2102	STOP FUNCTION	Selects the motor stop function.	*COAST*
	COAST	Stop by cutting off the motor power supply. The motor coasts to stop.	1
	RAMP	Stop along a ramp. See parameter group *22 ACCEL/DECEL*.	2
2103	DC MAGN TIME	Defines the pre-magnetizing time. See parameter *2101 START FUNCTION*. After the start command, the drive automatically pre-magnetizes the motor for the defined time.	0.30 s
	0.00…10.00 s	Magnetizing time. Set this value long enough to allow full motor magnetization. Too long a time heats the motor excessively.	1 = 0.01 s
2106	DC CURR REF	Defines the DC brake current. If parameter *2107 DC BRAKE TIME* is not zero, the DC brake current is injected to the motor during the stop. If parameter *2102 STOP FUNCTION* is set to *COAST*, DC braking is applied after the start command is removed. If parameter *2102 STOP FUNCTION* is set to *RAMP*, DC braking is applied after the ramp.	30%
	0…100%	Value in percent of the nominal motor current (parameter *9906 MOTOR NOM CURR*)	1 = 1%
2107	DC BRAKE TIME	Defines the DC brake time.	0.0 s
	0.0…250.0 s	Time	1 = 0.1 s

All parameters			
No.	**Name/Value**	**Description**	**Def/FbEq**
2108	START INHIBIT	Sets the Start inhibit function on or off. If the drive is not actively started and running, the Start inhibit function ignores a pending start command in any of the following situations and a new start command is required: • a fault is reset. • Run enable signal activates while the start command is active. See parameter *1601 RUN ENABLE*. • the control mode changes from local to remote. • the external control mode switches from EXT1 to EXT2 or from EXT2 to EXT1.	*OFF*
	OFF	Disabled	0
	ON	Enabled	1
2109	EMERG STOP SEL	Selects the source for the external emergency stop command. The drive cannot be restarted before the emergency stop command is reset. **Note:** The installation must include emergency stop devices and any other safety equipment that may be needed. Pressing the stop key on the drive's control panel does NOT: • generate an emergency stop of the motor • separate the drive from dangerous potential.	*NOT SEL*
	NOT SEL	Emergency stop function is not selected	0
	DI1	Digital input DI1. 1 = stop along the emergency stop ramp. See parameter *2208 EMERG DEC TIME*. 0 = emergency stop command reset.	1
	DI2	See selection *DI1*.	2
	DI3	See selection *DI1*.	3
	DI4	See selection *DI1*.	4
	DI5	See selection *DI1*.	5
	DI1(INV)	Inverted digital input DI. 0 = stop along the emergency stop ramp. See parameter *2208 EMERG DEC TIME*. 1 = emergency stop command reset	-1
	DI2(INV)	See selection *DI1(INV)*.	-2
	DI3(INV)	See selection *DI1(INV)*.	-3
	DI4(INV)	See selection *DI1(INV)*.	-4
	DI5(INV)	See selection *DI1(INV)*.	-5
2110	TORQ BOOST CURR	Defines the maximum supplied current during torque boost. See parameter *2101 START FUNCTION*.	100%
	15…300%	Value in percent	1 = 1%

All parameters			
No.	**Name/Value**	**Description**	**Def/FbEq**
2112	ZERO SPEED DELAY	Defines the delay for the Zero speed delay function. The function is useful in applications where a smooth and quick restarting is essential. During the delay the drive knows accurately the rotor position. **No Zero speed delay** **With Zero speed delay** 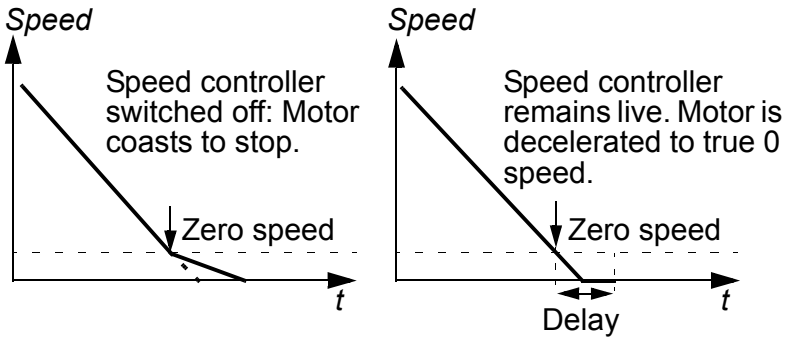 **No Zero speed delay** The drive receives a stop command and decelerates along a ramp. When the motor actual speed falls below an internal limit (called Zero speed), the speed controller is switched off. The inverter modulation is stopped and the motor coasts to standstill. **With Zero speed delay** The drive receives a stop command and decelerates along a ramp. When the actual motor speed falls below an internal limit (called Zero speed), the zero speed delay function activates. During the delay the functions keeps the speed controller live: The inverter modulates, motor is magnetized and the drive is ready for a quick restart.	0.0 s
	0.0 = NOT SEL 0.0…60.0 s	Delay time. If parameter value is set to zero, Zero speed delay function is disabled.	1 = 0.1 s
2113	START DELAY	Defines the start delay. After the conditions for start have been fulfilled, the drive waits until the delay has elapsed and then starts the motor. Start delay can be used with all start methods. If start delay is zero, the delay is disabled. During the start delay, alarm *START DELAY* is shown.	0.00 s
	0.0…60.0 s	Delay time	1 = 0.01 s
22 ACCEL/DECEL		Acceleration and deceleration times	
2201	ACC/DEC 1/2 SEL	Defines the source from which the drive reads the signal that selects between the two ramp pairs, acceleration/deceleration pair 1 and 2. Ramp pair 1 is defined by parameters *2202*…*2204*. Ramp pair 2 is defined by parameters *2205*…*2207*.	*DI5*
	NOT SEL	Ramp pair 1 is used.	0
	DI1	Digital input DI1. 1 = ramp pair 2, 0 = ramp pair 1.	1
	DI2	See selection *DI1*.	2
	DI3	See selection *DI1*.	3
	DI4	See selection *DI1*.	4
	DI5	See selection *DI1*.	5

All parameters			
No.	**Name/Value**	**Description**	**Def/FbEq**
	COMM	Fieldbus interface as the source for ramp pair 1/2 selection, ie Control word *0301 FB CMD WORD 1* bit 10. The Control word is sent by the fieldbus controller through the embedded fieldbus (Modbus) to the drive. For the Control word bits, see section *DCU communication profile* on page *296*. **Note:** This setting applies only for the DCU profile.	7
	DI1(INV)	Inverted digital input DI1. 0 = ramp pair 2, 1 = ramp pair 1.	-1
	DI2(INV)	See selection *DI1(INV)*.	-2
	DI3(INV)	See selection *DI1(INV)*.	-3
	DI4(INV)	See selection *DI1(INV)*.	-4
	DI5(INV)	See selection *DI1(INV)*.	-5
2202	ACCELER TIME 1	Defines the acceleration time 1, that is, the time required for the speed to change from zero to the speed defined by parameter *2008 MAXIMUM FREQ*. • If the speed reference increases faster than the set acceleration rate, the motor speed follows the acceleration rate. • If the speed reference increases slower than the set acceleration rate, the motor speed follows the reference signal. • If the acceleration time is set too short, the drive automatically prolongs the acceleration in order not to exceed the drive operating limits. Actual acceleration time depends on parameter *2204 RAMP SHAPE 1* setting.	5.0 s
	0.0…1800.0 s	Time	1 = 0.1 s
2203	DECELER TIME 1	Defines the deceleration time 1, that is, the time required for the speed to change from the value defined by parameter *2008 MAXIMUM FREQ* to zero. • If the speed reference decreases slower than the set deceleration rate, the motor speed follows the reference signal. • If the reference changes faster than the set deceleration rate, the motor speed follows the deceleration rate. • If the deceleration time is set too short, the drive automatically prolongs the deceleration in order not to exceed drive operating limits. If a short deceleration time is needed for a high inertia application, note that the ACS310 cannot be equipped with a brake resistor. Actual deceleration time depends on parameter *2204 RAMP SHAPE 1* setting.	5.0 s
	0.0…1800.0 s	Time	1 = 0.1 s

All parameters			
No.	**Name/Value**	**Description**	**Def/FbEq**
2204	RAMP SHAPE 1	Selects the shape of the acceleration/deceleration ramp 1. The function is deactivated during emergency stop.	*0.0 = LINEAR*
	0.0 = LINEAR 0.1…1000.0 s	0.0: Linear ramp. Suitable for steady acceleration or deceleration and for slow ramps. 0.1 … 1000.0 s: S-curve ramp. S-curve ramps are ideal for conveyors carrying fragile loads, or other applications where a smooth transition is required when changing from one speed to another. The S-curve consists of symmetrical curves at both ends of the ramp and a linear part in between. A rule of thumb: A suitable relation between the ramp shape time and the acceleration ramp time is 1/5. 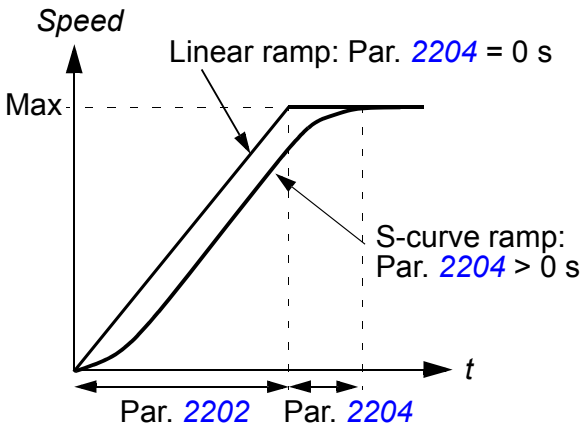 	1 = 0.1 s
2205	ACCELER TIME 2	Defines the acceleration time 2, that is, the time required for the speed to change from zero to the speed defined by parameter *2008 MAXIMUM FREQ*. See parameter *2202 ACCELER TIME 1*.	60.0 s
	0.0…1800.0 s	Time	1 = 0.1 s
2206	DECELER TIME 2	Defines the deceleration time 2, that is, the time required for the speed to change from the value defined by parameter *2008 MAXIMUM FREQ* to zero. See parameter *2203 DECELER TIME 1*.	60.0 s
	0.0…1800.0 s	Time	1 = 0.1 s
2207	RAMP SHAPE 2	Selects the shape of the acceleration/deceleration ramp 2. The function is deactivated during emergency stop.	*0.0 = LINEAR*
	0.0 = LINEAR 0.1…1000.0 s	See parameter *2204 RAMP SHAPE 1*.	1 = 0.1 s
2208	EMERG DEC TIME	Defines the time within which the drive is stopped if an emergency stop is activated. See parameter *2109 EMERG STOP SEL*.	1.0 s
	0.0…1800.0 s	Time	1 = 0.1 s
2209	RAMP INPUT 0	Defines the control for forcing the speed to zero with the currently used deceleration ramp (see parameters *2203 DECELER TIME 1* and *2206 DECELER TIME 2*).	*NOT SEL*
	NOT SEL	Not selected	0

All parameters			
No.	**Name/Value**	**Description**	**Def/FbEq**
	DI1	Digital input DI1. 1 = ramp input is forced to zero. Ramp output ramps to zero according to the used ramp time.	1
	DI2	See selection DI1.	2
	DI3	See selection DI1.	3
	DI4	See selection DI1.	4
	DI5	See selection DI1.	5
	COMM	Fieldbus interface as the source for forcing ramp input to zero, ie Control word *0301 FB CMD WORD 1* bit 13 (with ABB drives profile *5319 EFB PAR 19* bit 6). The Control word is sent by the fieldbus controller through the embedded fieldbus (Modbus) to the drive. For the Control word bits, see sections *DCU communication profile* on page *296* and *ABB drives communication profile* on page *291*.	7
	DI1(INV)	Inverted digital input DI1. 0 = ramp input is forced to zero. Ramp output ramps to zero according to the used ramp time.	-1
	DI2(INV)	See selection DI1(INV).	-2
	DI3(INV)	See selection DI1(INV).	-3
	DI4(INV)	See selection DI1(INV).	-4
	DI5(INV)	See selection DI1(INV).	-5
25 CRITICAL SPEEDS		Speed (output frequency) bands within which the drive is not allowed to operate.	
2501	CRIT SPEED SEL	Activates/deactivates the critical speeds function. The critical speed function avoids specific output frequency ranges. **Example:** A fan has vibrations in the range of 18 to 23 Hz and 46 to 52 Hz. To make the drive to jump over the vibration frequency ranges: • Activate the critical speeds function. • Set the critical frequency ranges as in the figure below. 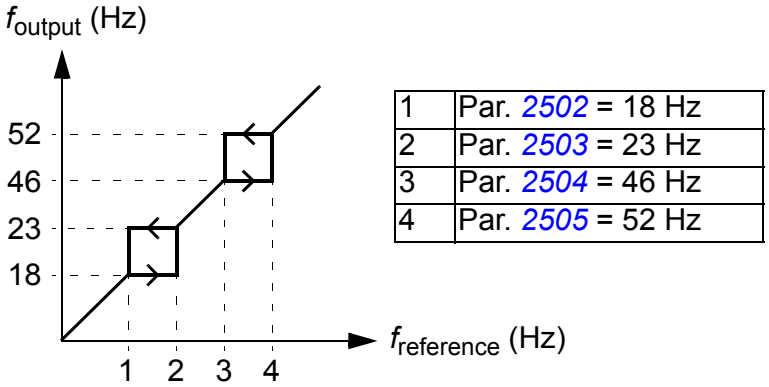 	*OFF*
	OFF	Inactive	0
	ON	Active	1
2502	CRIT SPEED 1 LO	Defines the minimum limit for critical output frequency range 1	0.0 Hz
	0.0…500.0 Hz	Limit in Hz. The value cannot be above the maximum (parameter *2503 CRIT SPEED 1 HI*).	1 = 0.1 Hz

All parameters			
No.	**Name/Value**	**Description**	**Def/FbEq**
2503	CRIT SPEED 1 HI	Defines the maximum limit for critical output frequency range 1	0.0 Hz
	0.0…500.0 Hz	Limit in Hz. The value cannot be below the minimum (parameter *2502 CRIT SPEED 1 LO*).	1 = 0.1 Hz
2504	CRIT SPEED 2 LO	See parameter *2502 CRIT SPEED 1 LO*.	0.0 Hz
	0.0…500.0 Hz	See parameter *2502*.	1 = 0.1 Hz
2505	CRIT SPEED 2 HI	See parameter *2503 CRIT SPEED 1 HI*.	0.0 Hz
	0.0…500.0 Hz	See parameter *2503*.	1 = 0.1 Hz
2506	CRIT SPEED 3 LO	See parameter *2502 CRIT SPEED 1 LO*.	0.0 Hz
	0.0…500.0 Hz	See parameter *2502*.	1 = 0.1 Hz
2507	CRIT SPEED 3 HI	See parameter *2503 CRIT SPEED 1 HI*.	0.0 Hz
	0.0…500.0 Hz	See parameter *2503*.	1 = 0.1 Hz
26 MOTOR CONTROL		Motor control variables	
2603	IR COMP VOLT	Defines the output voltage boost at zero speed (IR compensation). The function is useful in applications with a high break-away torque when vector control cannot be applied. To prevent overheating, set IR compensation voltage as low as possible. The figure below illustrates the IR compensation. Typical IR compensation values: P_N (kW) | 0.37 | 0.75 | 2.2 | 4.0 | 7.5 **200…240** V units IR comp (V) | 8.4 | 7.7 | 5.6 | 8.4 | N/A **380…480** V units IR comp (V) | 14 | 14 | 5.6 | 8.4 | 7 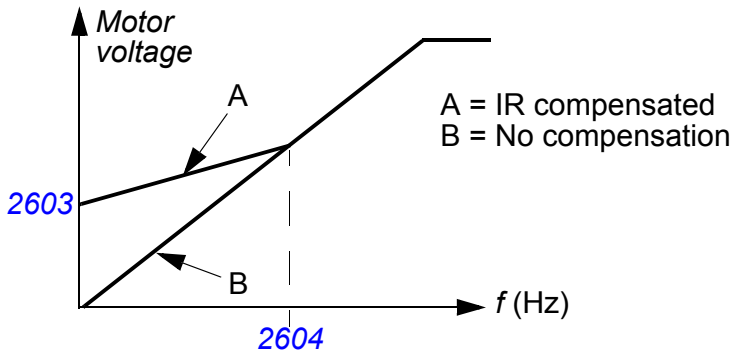 	Type dependent
	0.0…100.0 V	Voltage boost	1 = 0.1 V

All parameters			
No.	**Name/Value**	**Description**	**Def/FbEq**
2604	IR COMP FREQ	Defines the frequency at which the IR compensation is 0 V. See the figure for parameter *2603 IR COMP VOLT* **Note:** If parameter *2605 U/F RATIO* is set to *USER DEFINED*, this parameter is not active. The IR compensation frequency is set by parameter *2610 USER DEFINED U1*.	80%
	0…100%	Value in percent of the motor frequency	1 = 1%
2605	U/F RATIO	Selects the voltage to frequency (U/f) ratio below the field weakening point.	*SQUARE D*
	LINEAR	Linear ratio for constant torque applications.	1
	SQUARED	Squared ratio for centrifugal pump and fan applications. With squared U/f ratio the noise level is lower for most operating frequencies.	2
	USER DEFINED	Custom ratio defined by parameters *2610*…*2618*. See section *Custom U/f ratio* on page *130*.	3
2606	SWITCHING FREQ	Defines the switching frequency of the drive. Higher switching frequency results in lower acoustic noise. See also parameter *2607 SWITCH FREQ CTRL* and section *Switching frequency derating, I2N and ILD (= all currents)* on page *328*. In multimotor systems, do not change the switching frequency from the default value.	4 kHz
	4 kHz		1 = 1 kHz
	8 kHz		
	12 kHz		
	16 kHz		
2607	SWITCH FREQ CTRL	Activates the switching frequency control. When active, the selection of parameter *2606 SWITCHING FREQ* is limited when the drive internal temperature increases. See the figure below. This function allows the highest possible switching frequency at a specific operation point. Higher switching frequency results in lower acoustic noise, but higher internal losses. 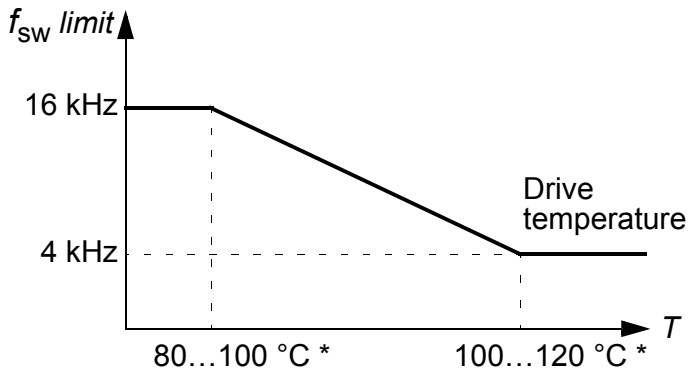 * Temperature depends on the drive output frequency.	*ON*
	ON	Active	1

All parameters			
No.	**Name/Value**	**Description**	**Def/FbEq**
	ON (LOAD)	Switching frequency can adapt to loading instead of limiting the output current. This allows maximum loading with all switching frequency selections. The drive automatically decreases the actual switching frequency if loading is too high for the selected switching frequency.	2
2608	SLIP COMP RATIO	Defines the slip gain for the motor slip compensation control. 100% means full slip compensation, 0% means no slip compensation. Other values can be used if a static speed error is detected despite the full slip compensation. **Example:** 35 Hz constant speed reference is given to the drive. Despite the full slip compensation (*SLIP COMP RATIO* = 100%), a manual tachometer measurement from the motor axis gives a speed value of 34 Hz. The static speed error is 35 Hz - 34 Hz = 1 Hz. To compensate the error, the slip gain should be increased.	0%
	0…200%	Slip gain	1 = 1%
2609	NOISE SMOOTHING	Enables the noise smoothing function. Noise smoothing distributes the acoustic motor noise over a range of frequencies instead of a single tonal frequency resulting in lower peak noise intensity. A random component with an average of 0 Hz is added to the switching frequency set by parameter *2606 SWITCHING FREQ*. **Note:** Parameter has no effect if parameter *2606 SWITCHING FREQ* is set to 16 kHz.	*DISABLE*
	DISABLE	Disabled	0
	ENABLE	Enabled	1
2610	USER DEFINED U1	Defines the first voltage point of the custom U/f curve at the frequency defined by parameter *2611 USER DEFINED F1*. See section *Custom U/f ratio* on page *130*.	19% of U_N
	0…120% of U_N V	Voltage	1 = 1 V
2611	USER DEFINED F1	Defines the first frequency point of the custom U/f curve.	10.0 Hz
	0.0…500.0 Hz	Frequency	1 = 0.1 Hz
2612	USER DEFINED U2	Defines the second voltage point of the custom U/f curve at the frequency defined by parameter *2613 USER DEFINED F2*. See section *Custom U/f ratio* on page *130*.	38% of U_N
	0…120% of U_N V	Voltage	1 = 1 V
2613	USER DEFINED F2	Defines the second frequency point of the custom U/f curve.	20.0 Hz
	0.0…500.0 Hz	Frequency	1 = 0.1 Hz
2614	USER DEFINED U3	Defines the third voltage point of the custom U/f curve at the frequency defined by parameter *2615 USER DEFINED F3*. See section *Custom U/f ratio* on page *130*.	47.5% of U_N
	0…120% of U_N V	Voltage	1 = 1 V
2615	USER DEFINED F3	Defines the third frequency point of the custom U/f curve.	25.0 Hz
	0.0…500.0 Hz	Frequency	1 = 0.1 Hz
2616	USER DEFINED U4	Defines the fourth voltage point of the custom U/f curve at the frequency defined by parameter *2617 USER DEFINED F4*. See section *Custom U/f ratio* on page *130*.	76% of U_N

All parameters			
No.	**Name/Value**	**Description**	**Def/FbEq**
	0…120% of U_N V	Voltage	1 = 1 V
2617	USER DEFINED F4	Defines the fourth frequency point of the custom U/f curve.	40.0 Hz
	0.0…500.0 Hz	Frequency	1 = 0.1 Hz
2618	FW VOLTAGE	Defines the voltage of the U/f curve when frequency is equal to or exceeds the nominal motor frequency (*9907 MOTOR NOM FREQ*). See section *Custom U/f ratio* on page *130*.	95% of U_N
	0…120% of U_N V	Voltage	1 = 1 V
2619	DC STABILIZER	Enables or disables the DC voltage stabilizer. The DC stabilizer is used to prevent possible voltage oscillations in the drive DC bus caused by motor load or weak supply network. In case of voltage variation, the drive tunes the frequency reference to stabilize the DC bus voltage and therefore the load torque oscillation.	*DISABLE*
	DISABLE	Disabled	0
	ENABLE	Enabled	1
29 MAINTENANCE TRIG		Maintenance triggers	
2901	COOLING FAN TRIG	Defines the trigger point for the drive cooling fan run time counter. Value is compared to parameter *2902 COOLING FAN ACT* value.	0.0 kh
	0.0…6553.5 kh	Time. If parameter value is set to zero, the trigger is disabled.	1 = 0.1 kh
2902	COOLING FAN ACT	Defines the actual value for the cooling fan run time counter. When parameter *2901 COOLING FAN TRIG* has been set to a non zero value, the counter starts. When the actual value of the counter exceeds the value defined by parameter *2901*, a maintenance notice is displayed on the panel.	0.0 kh
	0.0…6553.5 kh	Time. Parameter is reset by setting it to zero.	1 = 0.1 kh
2903	REVOLUTION TRIG	Defines the trigger point for the motor revolution counter. Value is compared to parameter *2904 REVOLUTION ACT* value.	0 Mrev
	0…65535 Mrev	Millions of revolutions. If parameter value is set to zero, the trigger is disabled.	1 = 1 Mrev
2904	REVOLUTION ACT	Defines the actual value for the motor revolution counter. When parameter *2903 REVOLUTION TRIG* has been set to a non zero value, the counter starts. When the actual value of the counter exceeds the value defined by parameter *2903*, a maintenance notice is displayed on the panel.	0 Mrev
	0…65535 Mrev	Millions of revolutions. Parameter is reset by setting it to zero.	1 = 1 Mrev
2905	RUN TIME TRIG	Defines the trigger point for the drive run time counter. Value is compared to parameter *2906 RUN TIME ACT* value.	0.0 kh
	0.0…6553.5 kh	Time. If parameter value is set to zero, the trigger is disabled.	1 = 0.1 kh

All parameters			
No.	**Name/Value**	**Description**	**Def/FbEq**
2906	RUN TIME ACT	Defines the actual value for the drive run time counter. When parameter *2905 RUN TIME TRIG* has been set to a non zero value, the counter starts. When the actual value of the counter exceeds the value defined by parameter *2905*, a maintenance notice is displayed on the panel.	0.0 kh
	0.0…6553.5 kh	Time. Parameter is reset by setting it to zero.	1 = 0.1 kh
2907	USER MWh TRIG	Defines the trigger point for the drive power consumption counter. Value is compared to parameter *2908 USER MWh ACT* value.	0.0 MWh
	0.0…6553.5 MWh	Megawatt hours. If parameter value is set to zero, the trigger is disabled.	1 = 0.1 MWh
2908	USER MWh ACT	Defines the actual value of the drive power consumption counter. When parameter *2907 USER MWh TRIG* has been set to a non zero value, the counter starts. When the actual value of the counter exceeds the value defined by parameter *2907*, a maintenance notice is displayed on the panel.	0.0 MWh
	0.0…6553.5 MWh	Megawatt hours. Parameter is reset by setting it to zero.	1 = 0.1 MWh
30 FAULT FUNCTIONS		Programmable protection functions	
3001	AI<MIN FUNCTION	Defines the drive response if the analog input (AI) signal drops below the fault limits and AI is used • as the active reference source (group *11 REFERENCE SELECT*) • as the process or external PID controllers' feedback or setpoint source (group *40 PROCESS PID SET 1*, *41 PROCESS PID SET 2* or *42 EXT / TRIM PID*) and the corresponding PID controller is active. *3021 AI1 FAULT LIMIT* and *3022 AI2 FAULT LIMIT* set the fault limits.	*NOT SEL*
	NOT SEL	Protection is inactive.	0
	FAULT	The drive trips on fault *AI1 LOSS* / *AI2 LOSS* and the motor coasts to stop. Fault limit is defined by parameter *3021 AI1 FAULT LIMIT* / *3022 AI2 FAULT LIMIT*.	1
	CONST SP 7	The drive generates alarm *AI1 LOSS* / *AI2 LOSS* and sets the speed to the value defined by parameter *1208 CONST SPEED 7*. Alarm limit is defined by parameter *3021 AI1 FAULT LIMIT* / *3022 AI2 FAULT LIMIT*. ⚠ **WARNING!** Make sure that it is safe to continue operation in case the analog input signal is lost.	2
	LAST SPEED	The drive generates alarm *AI1 LOSS* / *AI2 LOSS* and freezes the speed to the level the drive was operating at. The speed is determined by the average speed over the previous 10 seconds. Alarm limit is defined by parameter *3021 AI1 FAULT LIMIT* / *3022 AI2 FAULT LIMIT*. ⚠ **WARNING!** Make sure that it is safe to continue operation in case the analog input signal is lost.	3

All parameters			
No.	**Name/Value**	**Description**	**Def/FbEq**
3002	PANEL COMM ERR	Selects how the drive reacts to a control panel communication break. **Note:** When either of the two external control locations are active, and start, stop and/or direction are through the control panel – *1001 EXT1 COMMANDS* / *1002 EXT2 COMMANDS* = 8 (*KEYPAD*) – the drive follows the speed reference according to the configuration of the external control locations, instead of the value of the last speed or parameter *1208 CONST SPEED 7*.	*FAULT*
	FAULT	Drive trips on fault *PANEL LOSS* and the motor coasts to stop.	1
	CONST SP 7	The drive generates alarm *PANEL LOSS* and sets the speed to the speed defined by parameter *1208 CONST SPEED 7*. ⚠ **WARNING!** Make sure that it is safe to continue operation in case of a panel communication break.	2
	LAST SPEED	The drive generates alarm *PANEL LOSS* and freezes the speed to the level the drive was operating at. The speed is determined by the average speed over the previous 10 seconds. ⚠ **WARNING!** Make sure that it is safe to continue operation in case of a panel communication break.	3
3003	EXTERNAL FAULT 1	Selects an interface for an external fault 1 signal.	*NOT SEL*
	NOT SEL	Not selected	0
	DI1	External fault indication through digital input DI1. 1: Fault trip (*EXT FAULT 1*). Motor coasts to stop. 0: No external fault.	1
	DI2	See selection *DI1*.	2
	DI3	See selection *DI1*.	3
	DI4	See selection *DI1*.	4
	DI5	See selection *DI1*.	5
	DI1(INV)	External fault indication through inverted digital input DI1. 0: Fault trip (*EXT FAULT 1*). Motor coasts to stop. 1: No external fault.	-1
	DI2(INV)	See selection *DI1(INV)*.	-2
	DI3(INV)	See selection *DI1(INV)*.	-3
	DI4(INV)	See selection *DI1(INV)*.	-4
	DI5(INV)	See selection *DI1(INV)*.	-5
3004	EXTERNAL FAULT 2	Selects an interface for an external fault 2 signal.	*NOT SEL*
		See parameter *3003 EXTERNAL FAULT 1*.	
3005	MOT THERM PROT	Selects how the drive reacts when the motor overtemperature is detected.	*FAULT*
	NOT SEL	Protection is inactive.	0

All parameters			
No.	**Name/Value**	**Description**	**Def/FbEq**
	FAULT	The drive trips on fault *MOT OVERTEMP* when the temperature exceeds 110 °C, and the motor coasts to stop. **Note:** Because motor thermal protection has memory retention, do not shut down the drive when a *MOT OVERTEMP* fault occurs. Shutting down the drive does not reset the fault. The drive resets the fault as soon as the motor temperature has lowered enough.	1
	ALARM	The drive generates alarm *MOTOR TEMP* when the motor temperature exceeds 90 °C.	2
3006	MOT THERM TIME	Defines the thermal time constant for the motor thermal model, that is, the time within which the motor temperature has reached 63% of the nominal temperature with steady load. For thermal protection according to UL requirements for NEMA class motors, use the rule of thumb: Motor thermal time = 35 · t6. t6 (in seconds) is specified by the motor manufacturer as the time the motor can safely operate at six times its rated current. Thermal time for a Class 10 trip curve is 350 s, for a Class 20 trip curve 700 s, and for a Class 30 trip curve 1050 s. 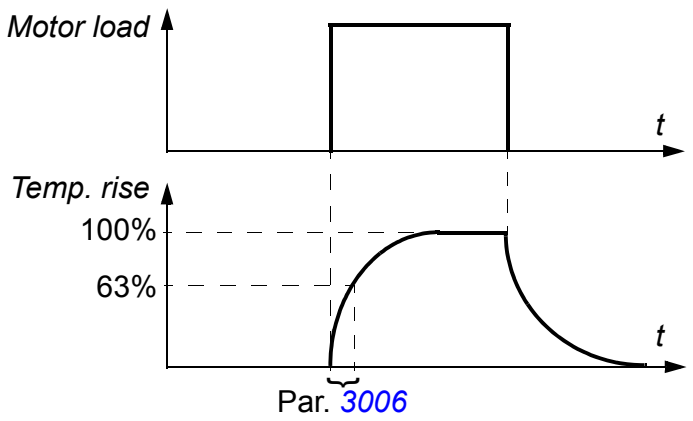 	500 s
	256…9999 s	Time constant	1 = 1 s

All parameters			
No.	**Name/Value**	**Description**	**Def/FbEq**
3007	MOT LOAD CURVE	Defines the load curve together with parameters *3008 ZERO SPEED LOAD* and *3009 BREAK POINT FREQ*. With the default value 100%, motor overload protection is functioning when the constant current exceeds 127% of the parameter *9906 MOTOR NOM CURR* value. The default overloadability is at the same level as what motor manufacturers typically allow below 30 °C (86 °F) ambient temperature and below 1000 m (3300 ft) altitude. When the ambient temperature exceeds 30 °C (86 °F) or the installation altitude is over 1000 m (3300 ft), decrease the parameter *3007* value according to the motor manufacturer's recommendation. **Example:** If the constant protection level needs to be 115% of the nominal motor current, set parameter *3007* value to 91% (= 115/127·100%). 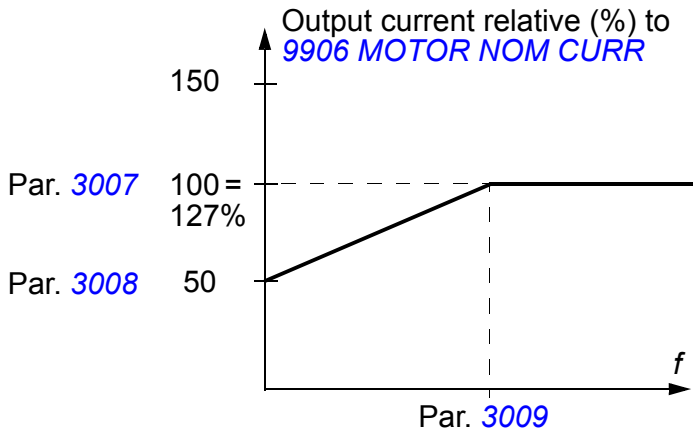 	100%
	50….150%	Allowed continuous motor load relative to the nominal motor current	1 = 1%
3008	ZERO SPEED LOAD	Defines the load curve together with parameters *3007 MOT LOAD CURVE* and *3009 BREAK POINT FREQ*.	70%
	25….150%	Allowed continuous motor load at zero speed in percent of the nominal motor current	1 = 1%

All parameters			
No.	**Name/Value**	**Description**	**Def/FbEq**
3009	BREAK POINT FREQ	Defines the load curve together with parameters *3007 MOT LOAD CURVE* and *3008 ZERO SPEED LOAD*. **Example:** Thermal protection trip times when parameters *3006*…*3008* have default values. 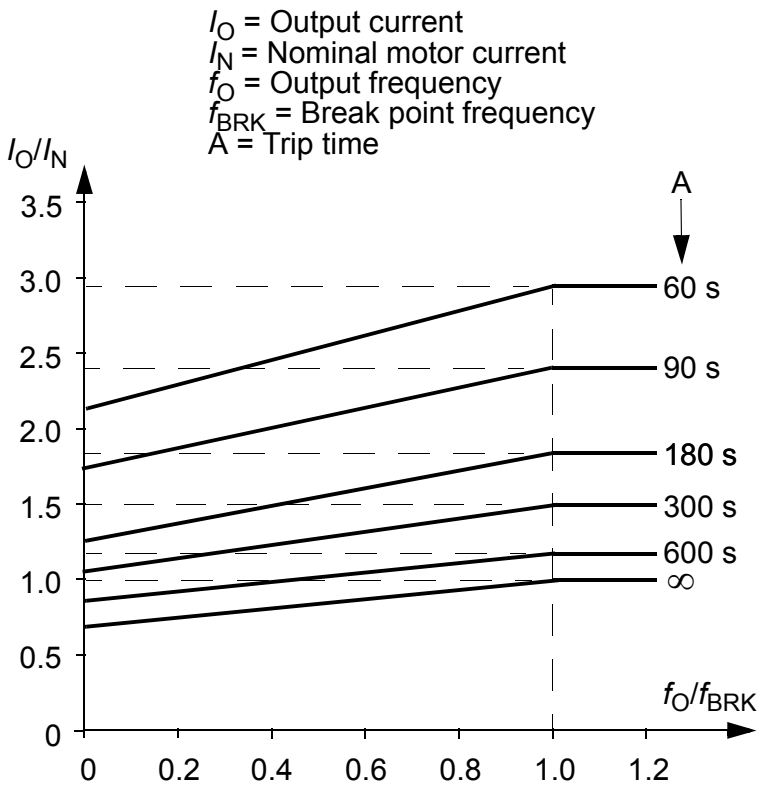 	35 Hz
	1…250 Hz	Drive output frequency at 100% load	1 = 1 Hz
3010	STALL FUNCTION	Selects how the drive reacts to a motor stall condition. The protection wakes up if the drive has operated in a stall region (see the figure below) longer than the time set by parameter *3012 STALL TIME*. 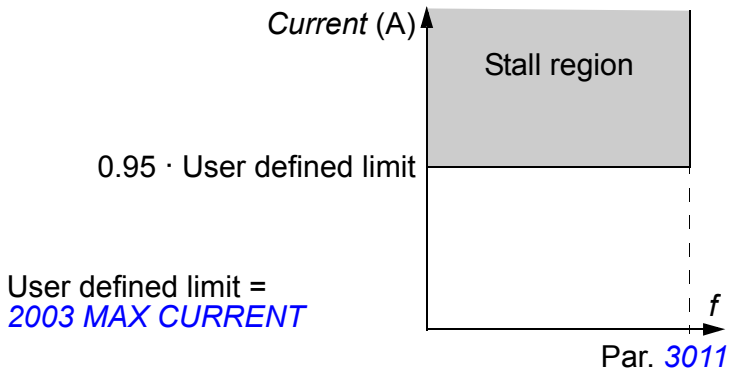 	*NOT SEL*
	NOT SEL	Protection is inactive.	0
	FAULT	The drive trips on fault *MOTOR STALL* and the motor coasts to stop.	1
	ALARM	The drive generates alarm *MOTOR STALL*.	2
3011	STALL FREQUENCY	Defines the frequency limit for the stall function. See parameter *3010 STALL FUNCTION*.	20.0 Hz

All parameters			
No.	**Name/Value**	**Description**	**Def/FbEq**
	0.5…50.0 Hz	Frequency	1 = 0.1 Hz
3012	STALL TIME	Defines the time for the stall function. See parameter *3010 STALL FUNCTION*.	20 s
	10…400 s	Time	1 = 1 s
3016	SUPPLY PHASE	Selects how the drive reacts to supply phase loss, ie when DC voltage ripple is excessive.	*FAULT*
	FAULT	The drive trips on fault *SUPPLY PHASE* and the motor coasts to stop when the DC voltage ripple exceeds 14% of the nominal DC voltage.	0
	LIMIT/ALARM	Drive output current is limited and alarm *INPUT PHASE LOSS* is generated when the DC voltage ripple exceeds 14% of the nominal DC voltage. There is a 10 s delay between the activation of the alarm and the output current limitation. The current is limited until the DC voltage ripple drops under the ripple limit.	1
	ALARM	The drive generates alarm *INPUT PHASE LOSS* when the DC ripple exceeds 14% of the nominal DC voltage.	2
3017	EARTH FAULT	Selects how the drive reacts when an earth (ground) fault is detected in the motor or the motor cable. **Note:** Disabling earth (ground) fault may void the warranty.	*ENABLE*
	DISABLE	No action	0
	ENABLE	The drive trips on fault *EARTH FAULT*.	1
3018	COMM FAULT FUNC	Selects how the drive reacts in a fieldbus communication break. The time delay is defined by parameter *3019 COMM FAULT TIME*.	*NOT SEL*
	NOT SEL	Protection is inactive.	0
	FAULT	Protection is active. The drive trips on fault *SERIAL 1 ERR* and coasts to stop.	1
	CONST SP 7	Protection is active. The drive generates alarm *IO COMM* and sets the speed to the value defined by parameter *1208 CONST SPEED 7*. **WARNING**! Make sure that it is safe to continue operation in case of a communication break.	2
	LAST SPEED	Protection is active. The drive generates alarm *IO COMM* and freezes the speed to the level the drive was operating at. The speed is determined by the average speed over the previous 10 seconds. **WARNING**! Make sure that it is safe to continue operation in case of a communication break.	3
3019	COMM FAULT TIME	Defines the time delay for the fieldbus communication break supervision. See parameter *3018 COMM FAULT FUNC*.	3.0 s
	0.0…600.0 s	Delay time	1 = 0.1 s
3021	AI1 FAULT LIMIT	Defines a fault level for analog input AI1. If parameter *3001 AI<MIN FUNCTION* is set to *FAULT*, the drive trips on fault *AI1 LOSS* when the analog input signal falls below the set level. Do not set this limit below the level defined by parameter *1301 MINIMUM AI1*.	0.0%
	0.0…100.0%	Value in percent of the full signal range	1 = 0.1%

All parameters			
No.	**Name/Value**	**Description**	**Def/FbEq**
3022	AI2 FAULT LIMIT	Defines a fault level for analog input AI2. If parameter *3001 AI<MIN FUNCTION* is set to *FAULT*, the drive trips on fault *AI2 LOSS* when the analog input signal falls below the set level. Do not set this limit below the level defined by parameter *1304 MINIMUM AI2*.	0.0%
	0.0…100.0%	Value in percent of the full signal range	1 = 0.1%
3023	WIRING FAULT	Selects how the drive reacts when incorrect input power and motor cable connection is detected (ie the input power cable is connected to the motor connection of the drive). **Note:** Disabling wiring fault (ground fault) may void the warranty.	*ENABLE*
	DISABLE	No action	0
	ENABLE	The drive trips on fault *OUTP WIRING*.	1
31 AUTOMATIC RESET		Automatic fault reset. Automatic resets are possible only for certain fault types and when the automatic reset function is activated for that fault type.	
3101	NR OF TRIALS	Defines the number of automatic fault resets the drive performs within the time defined by parameter *3102 TRIAL TIME*. If the number of automatic resets exceeds the set number (within the trial time), the drive prevents additional automatic resets and remains stopped. The drive must be reset from the control panel or from a source selected by parameter *1604 FAULT RESET SEL*. **Example:** Three faults have occurred during the trial time defined by parameter *3102*. Last fault is reset only if the number defined by parameter *3101* is 3 or more. 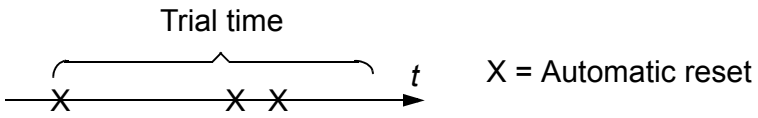	0
	0…5	Number of the automatic resets	1 = 1
3102	TRIAL TIME	Defines the time for the automatic fault reset function. See parameter *3101 NR OF TRIALS*.	30.0 s
	1.0…600.0 s	Time	1 = 0.1 s
3103	DELAY TIME	Defines the time that the drive waits after a fault before attempting an automatic reset. See parameter *3101 NR OF TRIALS*. If delay time is set to zero, the drive resets immediately.	0.0 s
	0.0…120.0 s	Time	1 = 0.1 s
3104	AR OVERCURRENT	Activates/deactivates the automatic reset for the overcurrent fault. Automatically resets the fault (*OVERCURRENT*) after the delay set by parameter *3103 DELAY TIME*.	*DISABLE*
	DISABLE	Inactive	0
	ENABLE	Active	1

All parameters			
No.	**Name/Value**	**Description**	**Def/FbEq**
3105	AR OVERVOLTAGE	Activates/deactivates the automatic reset for the intermediate link overvoltage fault. Automatically resets the fault (*DC OVERVOLT*) after the delay set by parameter *3103 DELAY TIME*.	*DISABLE*
	DISABLE	Inactive	0
	ENABLE	Active	1
3106	AR UNDERVOLTAGE	Activates/deactivates the automatic reset for the intermediate link undervoltage fault. Automatically resets the fault (*DC UNDERVOLT*) after the delay set by parameter *3103 DELAY TIME*.	*DISABLE*
	DISABLE	Inactive	0
	ENABLE	Active	1
3107	AR AI<MIN	Activates/deactivates the automatic reset for fault AI<MIN (analog input signal under the allowed minimum level) faults *AI1 LOSS* (*0007*) and *AI2 LOSS* (*0008*). Automatically resets the fault after the delay set by parameter *3103 DELAY TIME*.	*DISABLE*
	DISABLE	Inactive	0
	ENABLE	Active ⚠ **WARNING!** The drive may restart even after a long stop if the analog input signal is restored. Ensure that the use of this feature does not cause danger.	1
3108	AR EXTERNAL FLT	Activates/deactivates the automatic reset for faults *EXT FAULT 1* (*0014*) and *EXT FAULT 2* (*0015*). Automatically resets the fault after the delay set by parameter *3103 DELAY TIME*.	*DISABLE*
	DISABLE	Inactive	0
	ENABLE	Active	1

All parameters			
No.	**Name/Value**	**Description**	**Def/FbEq**
32 SUPERVISION		Signal supervision. Supervision status can be monitored with relay or transistor output. See parameter groups *14 RELAY OUTPUTS* and *18 FREQ IN & TRAN OUT*.	
3201	SUPERV 1 PARAM	Selects the first supervised signal. Supervision limits are defined by parameters *3202 SUPERV 1 LIM LO* and *3203 SUPERV 1 LIM HI*. **Example 1**: If *3202 SUPERV 1 LIM LO* ≤ *3203 SUPERV 1 LIM HI* **Case A** = *1401 RELAY OUTPUT 1* value is set to *SUPRV1 OVER*. Relay energizes when value of the signal selected with *3201 SUPERV 1 PARAM* exceeds the supervision limit defined by *3203 SUPERV 1 LIM HI*. The relay remains active until the supervised value drops below the low limit defined by *3202 SUPERV 1 LIM LO*. **Case B** = *1401 RELAY OUTPUT 1* value is set to *SUPRV1 UNDER*. Relay energizes when value of the signal selected with *3201 SUPERV 1 PARAM* drops below the supervision limit defined by *3202 SUPERV 1 LIM LO*. The relay remains active until the supervised value rises above the high limit defined by *3203 SUPERV 1 LIM HI*. 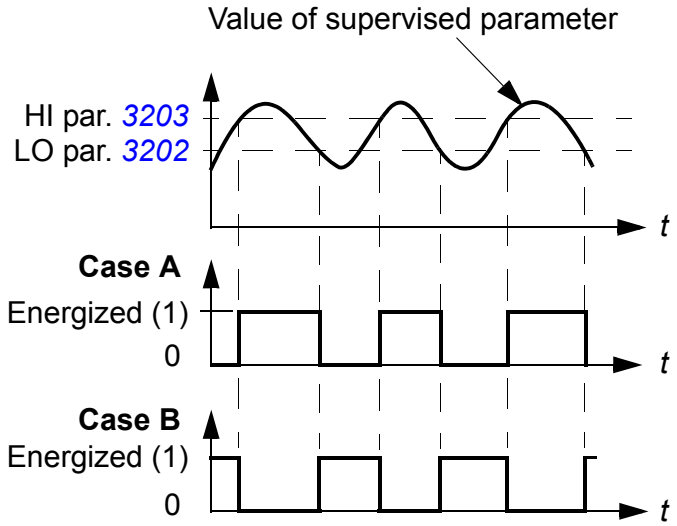 	103

All parameters			
No.	**Name/Value**	**Description**	**Def/FbEq**
		Example 2: If *3202 SUPERV 1 LIM LO* > *3203 SUPERV 1 LIM HI* The lower limit *3203 SUPERV 1 LIM HI* remains active until the supervised signal exceeds the higher limit *3202 SUPERV 1 LIM LO*, making it the active limit. The new limit remains active until the supervised signal drops below the lower limit *3203 SUPERV 1 LIM HI*, making it the active limit. **Case A** = *1401 RELAY OUTPUT 1* value is set to *SUPRV1 OVER*. Relay is energized whenever the supervised signal exceeds the active limit. **Case B** = *1401 RELAY OUTPUT 1* value is set to *SUPRV1 UNDER*. Relay is de-energized whenever the supervised signal drops below the active limit. 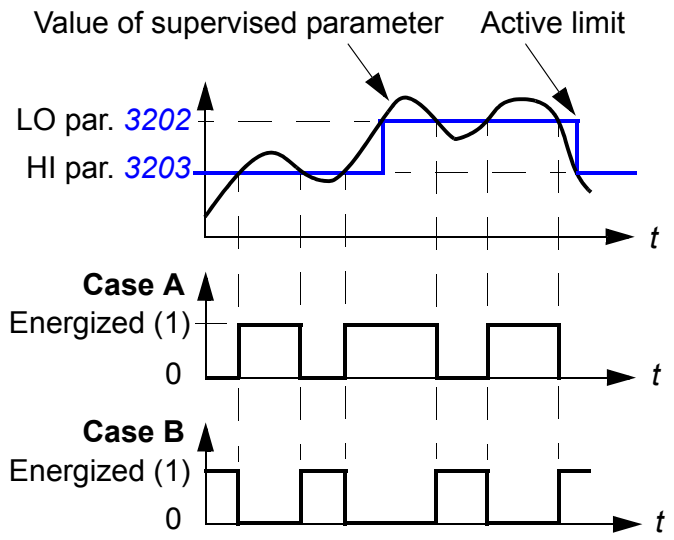	
	0, x…x	Parameter index in group *01 OPERATING DATA*. For example, 102 = *0102 SPEED*. 0 = not selected.	1 = 1
3202	SUPERV 1 LIM LO	Defines the low limit for the first supervised signal selected by parameter *3201 SUPERV 1 PARAM*. Supervision wakes up if the value is below the limit.	-
	x…x	Setting range depends on parameter *3201 SUPERV 1 PARAM* setting.	-
3203	SUPERV 1 LIM HI	Defines the high limit for the first supervised signal selected by parameter *3201 SUPERV 1 PARAM*. Supervision wakes up if the value is above the limit.	-
	x…x	Setting range depends on parameter *3201 SUPERV 1 PARAM* setting.	-
3204	SUPERV 2 PARAM	Selects the second supervised signal. Supervision limits are defined by parameters *3205 SUPERV 2 LIM LO* and *3206 SUPERV 2 LIM HI*. See parameter *3201 SUPERV 1 PARAM*.	104
	x…x	Parameter index in group *01 OPERATING DATA*. Eg 102 = *0102 SPEED*.	1 = 1
3205	SUPERV 2 LIM LO	Defines the low limit for the second supervised signal selected by parameter *3204 SUPERV 2 PARAM*. Supervision wakes up if the value is below the limit.	-

All parameters			
No.	**Name/Value**	**Description**	**Def/FbEq**
	x…x	Setting range depends on parameter *3204 SUPERV 2 PARAM* setting.	-
3206	SUPERV 2 LIM HI	Defines the high limit for the second supervised signal selected by parameter *3204 SUPERV 2 PARAM*. Supervision wakes up if the value is above the limit.	-
	x…x	Setting range depends on parameter *3204 SUPERV 2 PARAM* setting.	-
3207	SUPERV 3 PARAM	Selects the third supervised signal. Supervision limits are defined by parameters *3208 SUPERV 3 LIM LO* and *3209 SUPERV 3 LIM HI*. See parameter *3201 SUPERV 1 PARAM*.	105
	x…x	Parameter index in group *01 OPERATING DATA*. For example, 102 = *0102 SPEED*.	1 = 1
3208	SUPERV 3 LIM LO	Defines the low limit for the third supervised signal selected by parameter *3207 SUPERV 3 PARAM*. Supervision wakes up if the value is below the limit.	-
	x…x	Setting range depends on parameter *3207 SUPERV 3 PARAM* setting.	-
3209	SUPERV 3 LIM HI	Defines the high limit for the third supervised signal selected by parameter *3207 SUPERV 3 PARAM*. Supervision wakes up if the value is above the limit.	-
	x…x	Setting range depends on parameter *3207 SUPERV 3 PARAM* setting.	-
33 INFORMATION		Firmware package version, test date etc.	
3301	FIRMWARE	Displays the version of the firmware package.	
	0000…FFFF hex	For example, 241A hex	
3302	LOADING PACKAGE	Displays the version of the loading package.	type dependent
	2101…21FF hex	2101 hex = ACS310-03E- 2102 hex = ACS310-03U-	
3303	TEST DATE	Displays the test date.	00.00
		Date value in format YY.WW (year, week)	
3304	DRIVE RATING	Displays the drive current and voltage ratings.	0000 hex
	0000…FFFF hex	Value in format XXXY hex: XXX = Nominal current of the drive in amperes. An “A” indicates decimal point. For example if XXX is 9A7, nominal current is 9.7 A. Y = Nominal voltage of the drive: 1 = 1-phase 200…240 V 2 = 3-phase 200…240 V 4 = 3-phase 380…480 V	
3305	PARAMETER TABLE	Displays the version of the parameter table used in the drive.	
	0000…FFFF hex	Eg 400E hex	

All parameters			
No.	**Name/Value**	**Description**	**Def/FbEq**
34 PANEL DISPLAY		Selection of actual signals to be displayed on the panel	
3401	SIGNAL1 PARAM	Selects the first signal to be displayed on the control panel in the Output mode. Assistant control panel 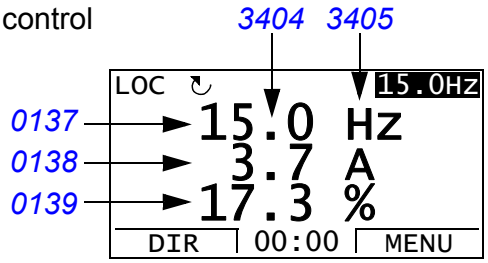 	103
	0, 101…178	Parameter index in group *01 OPERATING DATA*. For example, 102 = *0102 SPEED*. If value is set to 0, no signal is selected.	1 = 1
	100	NOT SELECTED	
3402	SIGNAL1 MIN	Defines the minimum value for the signal selected by parameter *3401 SIGNAL1 PARAM*. 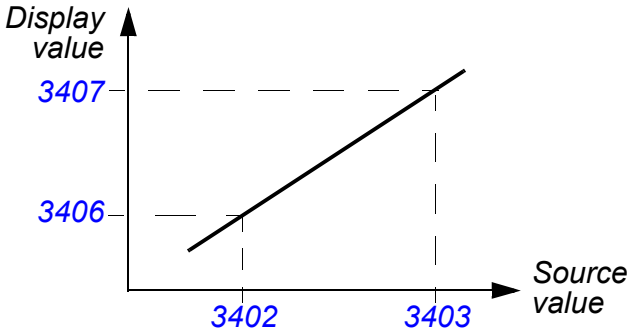 **Note:** Parameter is not effective if parameter *3404 OUTPUT1 DSP FORM* setting is *DIRECT*.	-
	x…x	Setting range depends on parameter *3401 SIGNAL1 PARAM* setting.	-
3403	SIGNAL1 MAX	Defines the maximum value for the signal selected by parameter *3401 SIGNAL1 PARAM*. See the figure for parameter *3402 SIGNAL1 MIN*. **Note:** Parameter is not effective if parameter *3404 OUTPUT1 DSP FORM* setting is 9 (*DIRECT*).	-
	x…x	Setting range depends on parameter *3401 SIGNAL1 PARAM* setting.	-

All parameters			
No.	**Name/Value**	**Description**	**Def/FbEq**
3404	OUTPUT1 DSP FORM	Defines the format for the displayed signal (selected by parameter *3401 SIGNAL1 PARAM*).	*DIRECT*
	+/-0	Signed/Unsigned value. Unit is selected by parameter *3405 OUTPUT1 UNIT*. **Example:** PI (3.14159)	0
	+/-0.0		1
	+/-0.00		2
	+/-0.000		3
	+0		4
	+0.0		5
	+0.00		6
	+0.000		7
	BAR METER	Bar graph	8
	DIRECT	Direct value. Decimal point location and units of measure are the same as for the source signal. **Note:** Parameters *3402*, *3403* and *3405*…*3407* are not effective.	9
3405	OUTPUT1 UNIT	Selects the unit for the displayed signal selected by parameter *3401 SIGNAL1 PARAM*. **Note:** Parameter is not effective if parameter *3404 OUTPUT1 DSP FORM* setting is *DIRECT*. **Note:** Unit selection does not convert values.	Depends on the signal selected with par. *3401*
	NO UNIT	No unit selected	0
	A	ampere	1
	V	volt	2
	Hz	hertz	3
	%	percent	4
	s	second	5
	h	hour	6
	rpm	revolutions per minute	7
	kh	kilohour	8
	°C	celsius	9
	lb ft	pounds per foot	10
	mA	milliampere	11
	mV	millivolt	12
	kW	kilowatt	13
	W	watt	14
	kWh	kilowatt hour	15
	°F	fahrenheit	16
	hp	horsepower	17
	MWh	megawatt hour	18

***3404* value**	**Display**	**Range**
+/-0	± 3	-32768…+32767
+/-0.0	± 3.1	
+/-0.00	± 3.14	
+/-0.000	± 3.142	
+0	3	0…65535
+0.0	3.1	
+0.00	3.14	
+0.000	3.142	

All parameters			
No.	**Name/Value**	**Description**	**Def/FbEq**
	m/s	meters per second	19
	m3/h	cubic meters per hour	20
	dm3/s	cubic decimeters per second	21
	bar	bar	22
	kPa	kilopascal	23
	GPM	gallons per minute	24
	PSI	pounds per square inch	25
	CFM	cubic feet per minute	26
	ft	foot	27
	MGD	millions of gallons per day	28
	inHg	inches of mercury	29
	FPM	feet per minute	30
	kb/s	kilobytes per second	31
	kHz	kilohertz	32
	ohm	ohm	33
	ppm	pulses per minute	34
	pps	pulses per second	35
	l/s	liters per second	36
	l/min	liters per minute	37
	l/h	liters per hour	38
	m3/s	cubic meters per second	39
	m3/m	cubic meters per minute	40
	kg/s	kilograms per second	41
	kg/m	kilograms per minute	42
	kg/h	kilograms per hour	43
	mbar	millibar	44
	Pa	pascal	45
	GPS	gallons per second	46
	gal/s	gallons per second	47
	gal/m	gallons per minute	48
	gal/h	gallons per hour	49
	ft3/s	cubic feet per second	50
	ft3/m	cubic feet per minute	51
	ft3/h	cubic feet per hour	52
	lb/s	pounds per second	53
	lb/m	pounds per minute	54
	lb/h	pounds per hour	55
	FPS	feet per second	56
	ft/s	feet per second	57
	inH2O	inches of water	58

All parameters			
No.	**Name/Value**	**Description**	**Def/FbEq**
	in wg	inches of water gauge	59
	ft wg	feet on water gauge	60
	lbsi	pounds per squared inch	61
	ms	millisecond	62
	Mrev	millions of revolutions	63
	d	days	64
	inWC	inches of water column	65
	m/min	meters per minute	66
	Nm	Newton meter	67
	Km3/h	thousand cubic meters per hour	68
	%ref	reference in percentage	117
	%act	actual value in percentage	118
	%dev	deviation in percentage	119
	% LD	load in percentage	120
	% SP	set point in percentage	121
	%FBK	feedback in percentage	122
	Iout	output current (in percentage)	123
	Vout	output voltage	124
	Fout	output frequency	125
	Tout	output torque	126
	Vdc	DC voltage	127
3406	OUTPUT1 MIN	Sets the minimum display value for the signal selected by parameter *3401 SIGNAL1 PARAM*. See parameter *3402 SIGNAL1 MIN*. **Note:** Parameter is not effective if parameter *3404 OUTPUT1 DSP FORM* setting is *DIRECT*.	-
	x…x	Setting range depends on parameter *3401 SIGNAL1 PARAM* setting.	-
3407	OUTPUT1 MAX	Sets the maximum display value for the signal selected by parameter *3401 SIGNAL1 PARAM*. See parameter *3402 SIGNAL1 MIN*. **Note:** Parameter is not effective if parameter *3404 OUTPUT1 DSP FORM* setting is *DIRECT*.	-
	x…x	Setting range depends on parameter *3401 SIGNAL1 PARAM* setting.	-
3408	SIGNAL2 PARAM	Selects the second signal to be displayed on the control panel in the Output mode. See parameter *3401 SIGNAL1 PARAM*.	104
	0, 101…178	Parameter index in group *01 OPERATING DATA*. For example, 102 = *0102 SPEED*. If value is set to 0, no signal is selected.	1 = 1
3409	SIGNAL2 MIN	Defines the minimum value for the signal selected by parameter *3408 SIGNAL2 PARAM*. See parameter *3402 SIGNAL1 MIN*.	-

All parameters			
No.	**Name/Value**	**Description**	**Def/FbEq**
	x…x	Setting range depends on parameter *3408 SIGNAL2 PARAM* setting.	-
3410	SIGNAL2 MAX	Defines the maximum value for the signal selected by parameter *3408 SIGNAL2 PARAM*. See parameter *3402 SIGNAL1 MIN*.	-
	x…x	Setting range depends on parameter *3408 SIGNAL2 PARAM* setting.	-
3411	OUTPUT2 DSP FORM	Defines the format for the displayed signal selected by parameter *3408 SIGNAL2 PARAM*.	*DIRECT*
		See parameter *3404 OUTPUT1 DSP FORM*.	-
3412	OUTPUT2 UNIT	Selects the unit for the displayed signal selected by parameter *3408 SIGNAL2 PARAM*.	-
		See parameter *3405 OUTPUT1 UNIT*.	-
3413	OUTPUT2 MIN	Sets the minimum display value for the signal selected by parameter *3408 SIGNAL2 PARAM*. See parameter *3402 SIGNAL1 MIN*.	-
	x…x	Setting range depends on parameter *3408 SIGNAL2 PARAM* setting.	-
3414	OUTPUT2 MAX	Sets the maximum display value for the signal selected by parameter *3408 SIGNAL2 PARAM*. See parameter *3402 SIGNAL1 MIN*.	-
	x…x	Setting range depends on parameter *3408 SIGNAL2 PARAM* setting.	-
3415	SIGNAL3 PARAM	Selects the third signal to be displayed on the control panel in the Output mode. See parameter *3401 SIGNAL1 PARAM*.	105
	0, 101…178	Parameter index in group *01 OPERATING DATA*. For example, 102 = *0102 SPEED*. If value is set to 0, no signal is selected.	1 = 1
3416	SIGNAL3 MIN	Defines the minimum value for the signal selected by parameter *3415 SIGNAL3 PARAM*. See parameter *3402 SIGNAL1 MIN*.	-
	x…x	Setting range depends on parameter *3415 SIGNAL3 PARAM* setting.	-
3417	SIGNAL3 MAX	Defines the maximum value for the signal selected by parameter *3415 SIGNAL3 PARAM*. See parameter *3402 SIGNAL1 MIN*.	-
	x…x	Setting range depends on parameter *3415 SIGNAL3 PARAM* setting.	-
3418	OUTPUT3 DSP FORM	Defines the format for the displayed signal selected by parameter *3415 SIGNAL3 PARAM*.	*DIRECT*
		See parameter *3404 OUTPUT1 DSP FORM*.	-
3419	OUTPUT3 UNIT	Selects the unit for the displayed signal selected by parameter *3415 SIGNAL3 PARAM*.	-
		See parameter *3405 OUTPUT1 UNIT*.	-
3420	OUTPUT3 MIN	Sets the minimum display value for the signal selected by parameter *3415 SIGNAL3 PARAM*. See parameter *3402 SIGNAL1 MIN*.	-

All parameters			
No.	**Name/Value**	**Description**	**Def/FbEq**
	x…x	Setting range depends on parameter *3415 SIGNAL3 PARAM* setting.	-
3421	OUTPUT3 MAX	Sets the maximum display value for the signal selected by parameter *3415 SIGNAL3 PARAM*. See parameter *3402 SIGNAL1 MIN*.	-
	x…x	Setting range depends on parameter *3415 SIGNAL3 PARAM* setting.	-
35 MOTOR TEMP MEAS		Motor temperature measurement. See section *Motor temperature measurement through the standard I/O* on page *142*.	
3501	SENSOR TYPE	Activates the motor temperature measurement function and selects the sensor type. See also parameter group *15 ANALOG OUTPUTS*.	*NONE*
	NONE	The function is inactive.	0
	1 x PT100	The function is active. The temperature is measured with one Pt100 sensor. Analog output AO feeds constant current through the sensor. The sensor resistance increases as the motor temperature rises, as does the voltage over the sensor. The temperature measurement function reads the voltage through analog input AI1/2 and converts it to degrees centigrade.	1
	2 x PT100	The function is active. Temperature is measured using two Pt100 sensors. See selection *1 x PT100*.	2
	3 x PT100	The function is active. Temperature is measured using three Pt100 sensors. See selection *1 x PT100*.	3

All parameters			
No.	**Name/Value**	**Description**	**Def/FbEq**
	PTC	The function is active. The temperature is supervised using one PTC sensor. Analog output AO feeds constant current through the sensor. The resistance of the sensor increases sharply as the motor temperature rises over the PTC reference temperature (Tref), as does the voltage over the resistor. The temperature measurement function reads the voltage through analog input AI1/2 and converts it into ohms. The figure below shows typical PTC sensor resistance values as a function of the motor operating temperature. **Temperature** / **Resistance** Normal / 0…1.5 kohm Excessive / ≥ 4 kohm 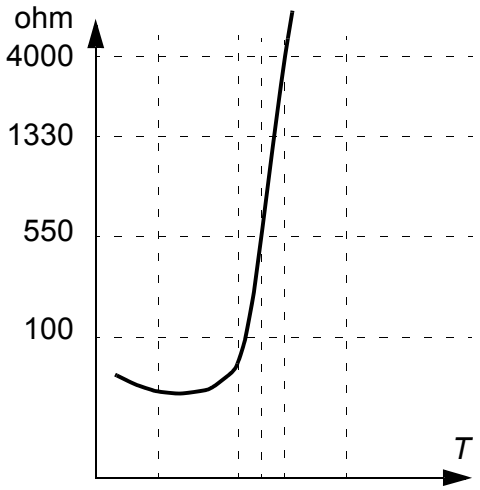 	4
	THERM(0)	The function is active. Motor temperature is monitored using a PTC sensor (see selection *PTC*) connected to drive through a normally closed thermistor relay connected to a digital input. 0 = motor overtemperature.	5
	THERM(1)	The function is active. Motor temperature is monitored using a PTC sensor (see selection *PTC*) connected to drive through a normally open thermistor relay connected to a digital input. 1 = motor overtemperature.	6
3502	INPUT SELECTION	Selects the source for the motor temperature measurement signal.	*AI1*
	AI1	Analog input AI1. Used when Pt100 or PTC sensor is selected for the temperature measurement.	1
	AI2	Analog input AI2. Used when Pt100 or PTC sensor is selected for the temperature measurement	2
	DI1	Digital input DI1. Used when parameter *3501 SENSOR TYPE* value is set to *THERM(0)*/*THERM(1)*.	3
	DI2	Digital input DI2. Used when parameter *3501 SENSOR TYPE* value is set to *THERM(0)*/*THERM(1)*.	4
	DI3	Digital input DI3. Used when parameter *3501 SENSOR TYPE* value is set to *THERM(0)*/*THERM(1)*.	5
	DI4	Digital input DI4. Used when parameter *3501 SENSOR TYPE* value is set to *THERM(0)*/*THERM(1)*.	6

All parameters			
No.	**Name/Value**	**Description**	**Def/FbEq**
	DI5	Digital input DI5. Used when parameter *3501 SENSOR TYPE* value is set to *THERM(0)*/*THERM(1)*.	7
3503	ALARM LIMIT	Defines the alarm limit for motor temperature measurement. Alarm *MOTOR TEMP* indication is given when the limit is exceeded. When parameter *3501 SENSOR TYPE* value is set to *THERM(0)*/*THERM(1)*: 1 = alarm.	0
	x…x	Alarm limit	-
3504	FAULT LIMIT	Defines the fault trip limit for motor temperature measurement. The drive trips on fault *MOT OVERTEMP* when the limit is exceeded. When parameter *3501 SENSOR TYPE* value is set to *THERM(0)*/*THERM(1)*: 1 = fault.	0
	x…x	Fault limit	-
3505	AO EXCITATION	Enables current feed from analog output AO. Parameter setting overrides parameter group *15 ANALOG OUTPUTS* settings. With PTC the output current is 1.6 mA. With Pt100 the output current is 9.1 mA.	*DISABLE*
	DISABLE	Disabled	0
	ENABLE	Enabled	1
36 TIMED FUNCTIONS		Time periods 1 to 4 and booster signal. See section *Timed functions* on page *144*.	
3601	TIMERS ENABLE	Selects the source for the timed function enable signal.	*NOT SEL*
	NOT SEL	Timed function is not selected.	0
	DI1	Digital input DI. Timed function enable on the rising edge of DI1.	1
	DI2	See selection *DI1*.	2
	DI3	See selection *DI1*.	3
	DI4	See selection *DI1*.	4
	DI5	See selection *DI1*.	5
	ACTIVE	Timed function is always enabled.	7
	DI1 CMODE	Timed function enable on the rising edge of DI1. Timed function is in continuous mode, in which the start date can be different from the stop date.	11
	DI2 CMODE	See selection *DI1 CMODE*.	12
	DI3 CMODE	See selection *DI1 CMODE*.	13
	DI4 CMODE	See selection *DI1 CMODE*.	14
	DI5 CMODE	See selection *DI1 CMODE*.	15
	CONT MODE	Timed function enabled in continuous mode, in which the start date can be different from the stop date.	17
	DI1(INV)	Inverted digital input DI1. Timed function enable on the falling edge of DI1.	-1
	DI2(INV)	See selection *DI1(INV)*.	-2
	DI3(INV)	See selection *DI1(INV)*.	-3
	DI4(INV)	See selection *DI1(INV)*.	-4

All parameters			
No.	**Name/Value**	**Description**	**Def/FbEq**
	DI5(INV)	See selection *DI1(INV)*.	-5
	DI1(INV) CM	Timed function enable on the falling edge of DI1. Timed function is in continuous mode, in which the start date can be different from the stop date.	-11
	DI2(INV) CM	See selection *DI1(INV) CM*.	-12
	DI3(INV) CM	See selection *DI1(INV) CM*.	-13
	DI4(INV) CM	See selection *DI1(INV) CM*.	-14
	DI5(INV) CM	See selection *DI1(INV) CM*.	-15
3602	START TIME 1	Defines the daily start time 1. The time can be changed in 2-second steps.	00:00:00
	00:00:00… 23:59:58	hours:minutes:seconds. **Example:** If parameter value is set to 07:00:00, timed function 1 is activated at 7:00 (7 a.m).	
3603	STOP TIME 1	Defines the daily stop time 1. The time can be changed in 2-second steps.	00:00:00
	00:00:00… 23:59:58	hours:minutes:seconds. **Example:** If parameter value is set to 18:00:00, timed function 1 is deactivated at 18:00 (6 p.m).	
3604	START DAY 1	Defines the start day 1.	*MONDAY*
	MONDAY	**Example:** If parameter value is set to *MONDAY*, timed function 1 is active from Monday midnight (00:00:00).	1
	TUESDAY		2
	WEDNESDAY		3
	THURSDAY		4
	FRIDAY		5
	SATURDAY		6
	SUNDAY		7
3605	STOP DAY 1	Defines the stop day 1.	*MONDAY*
		See parameter *3604 START DAY 1*. **Example:** If parameter is set to *FRIDAY*, timed function 1 is deactivated on Friday midnight (23:59:58).	
3606	START TIME 2	See parameter *3602 START TIME 1*.	
		See parameter *3602 START TIME 1*.	
3607	STOP TIME 2	See parameter *3603 STOP TIME 1*.	
		See parameter *3603 STOP TIME 1*.	
3608	START DAY 2	See parameter *3604 START DAY 1*.	
		See parameter *3604 START DAY 1*.	
3609	STOP DAY 2	See parameter *3605 STOP DAY 1*.	
		See parameter *3605 STOP DAY 1*.	
3610	START TIME 3	See parameter *3602 START TIME 1*.	
		See parameter *3602 START TIME 1*.	
3611	STOP TIME 3	See parameter *3603 STOP TIME 1*.	
		See parameter *3603 STOP TIME 1*.	
3612	START DAY 3	See parameter *3604 START DAY 1*.	

All parameters			
No.	**Name/Value**	**Description**	**Def/FbEq**
		See parameter *3604 START DAY 1*.	
3613	STOP DAY 3	See parameter *3605 STOP DAY 1*.	
		See parameter *3605 STOP DAY 1*.	
3614	START TIME 4	See parameter *3602 START TIME 1*.	
		See parameter *3602 START TIME 1*.	
3615	STOP TIME 4	See parameter *3603 STOP TIME 1*.	
		See parameter *3603 STOP TIME 1*.	
3616	START DAY 4	See parameter *3604 START DAY 1*.	
		See parameter *3604 START DAY 1*.	
3617	STOP DAY 4	See parameter *3605 STOP DAY 1*.	
		See parameter *3605 STOP DAY 1*.	
3622	BOOSTER SEL	Selects the source for the booster activation signal.	*NOT SEL*
	NOT SEL	No booster activation signal	0
	DI1	Digital input DI1. 1 = active, 0 = inactive.	1
	DI2	See selection *DI1*.	2
	DI3	See selection *DI1*.	3
	DI4	See selection *DI1*.	4
	DI5	See selection *DI1*.	5
	DI1(INV)	Inverted digital input DI1. 0 = active, 1 = inactive.	-1
	DI2(INV)	See selection *DI1(INV)*.	-2
	DI3(INV)	See selection *DI1(INV)*.	-3
	DI4(INV)	See selection *DI1(INV)*.	-4
	DI5(INV)	See selection *DI1(INV)*.	-5
3623	BOOSTER TIME	Defines the time inside which the booster is deactivated after the booster activation signal is switched off.	00:00:00
	00:00:00… 23:59:58	hours:minutes:seconds **Example:** If parameter *3622 BOOSTER SEL* is set to *DI1* and *3623 BOOSTER TIME* is set to 01:30:00, the booster is active for 1 hour and 30 minutes after digital input DI is deactivated. 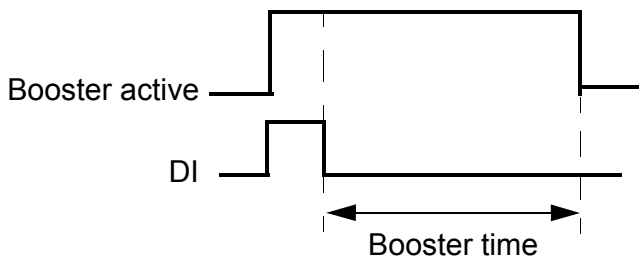 	
3626	TIMED FUNC 1 SRC	Selects the time periods for *TIMED FUNC 1 SRC*. Timed function can consist of 0…4 time periods and a booster.	*NOT SEL*
	NOT SEL	No time periods selected	0
	T1	Time period 1	1
	T2	Time period 2	2

All parameters			
No.	**Name/Value**	**Description**	**Def/FbEq**
	T1+T2	Time periods 1 and 2	3
	T3	Time period 3	4
	T1+T3	Time periods 1 and 3	5
	T2+T3	Time periods 2 and 3	6
	T1+T2+T3	Time periods 1, 2 and 3	7
	T4	Time period 4	8
	T1+T4	Time periods 1 and 4	9
	T2+T4	Time periods 2 and 4	10
	T1+T2+T4	Time periods 1, 2 and 4	11
	T3+T4	Time periods 4 and 3	12
	T1+T3+T4	Time periods 1, 3 and 4	13
	T2+T3+T4	Time periods 2, 3 and 4	14
	T1+T2+T3+T4	Time periods 1, 2, 3 and 4	15
	BOOSTER	Booster	16
	T1+B	Booster and time period 1	17
	T2+B	Booster and time period 2	18
	T1+T2+B	Booster and time periods 1 and 2	19
	T3+B	Booster and time period 3	20
	T1+T3+B	Booster and time periods 1 and 3	21
	T2+T3+B	Booster and time periods 2 and 3	22
	T1+T2+T3+B	Booster and time periods 1, 2 and 3	23
	T4+B	Booster and time period 4	24
	T1+T4+B	Booster and time periods 1 and 4	25
	T2+T4+B	Booster and time periods 2 and 4	26
	T1+T2+T4+B	Booster and time periods 1, 2 and 4	27
	T3+T4+B	Booster and time periods 3 and 4	28
	T1+T3+T4+B	Booster and time periods 1, 3 and 4	29
	T2+T3+T4+B	Booster and time periods 2, 3 and 4	30
	T1+2+3+4+B	Booster and time periods 1, 2, 3 and 4	31
3627	TIMED FUNC 2 SRC	See parameter *3626 TIMED FUNC 1 SRC*.	
		See parameter *3626 TIMED FUNC 1 SRC*.	
3628	TIMED FUNC 3 SRC	See parameter *3626 TIMED FUNC 1 SRC*.	
		See parameter *3626 TIMED FUNC 1 SRC*.	
3629	TIMED FUNC 4 SRC	See parameter *3626 TIMED FUNC 1 SRC*.	
		See parameter *3626 TIMED FUNC 1 SRC*.	

All parameters			
No.	**Name/Value**	**Description**	**Def/FbEq**
37 USER LOAD CURVE		Defines supervision of a user adjustable load curve (motor torque as a function of frequency). The curve is defined by five points. See section *User load curve* on page *147*.	
3701	USER LOAD C MODE	Defines supervision mode for the user adjustable load curve. 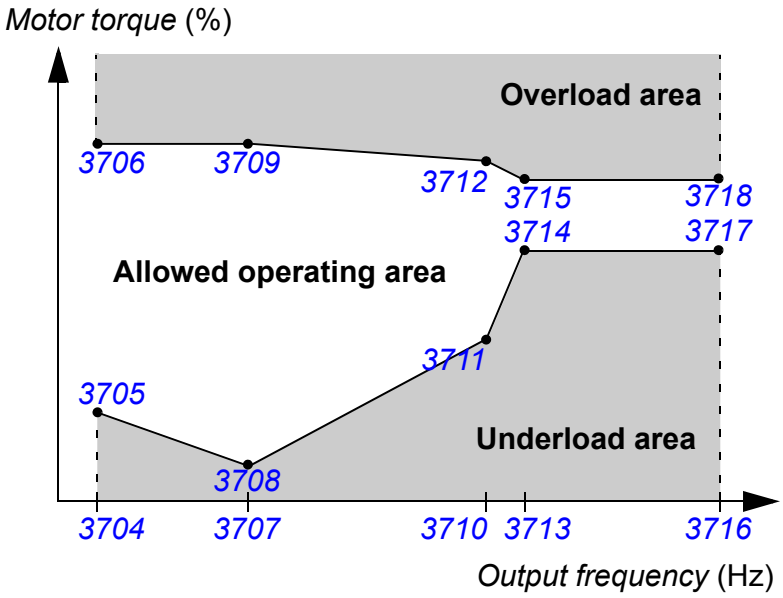 	*NOT SEL*
	NOT SEL	Supervision not active	0
	UNDERLOAD	Supervision for the torque dropping below the underload curve	1
	OVERLOAD	Supervision for the torque exceeding the overload curve	2
	BOTH	Supervision for the torque dropping below the underload curve or exceeding the overload curve	3
3702	USER LOAD C FUNC	Defines the action wanted during load supervision	*FAULT*
	FAULT	A fault is generated when the condition defined by *3701 USER LOAD C MODE* has been valid longer than the time set by *3703 USER LOAD C TIME*.	1
	ALARM	An alarm is generated when the condition defined by *3701 USER LOAD C MODE* has been valid longer than half of the time set by *3703 USER LOAD C TIME*.	2
3703	USER LOAD C TIME	Defines the time limit for generating a fault. Half of this time is used as the limit for generating an alarm.	20 s
	10…400 s	Time	1 = 1 s
3704	LOAD FREQ 1	Defines the frequency value of the first load curve definition point. Must be smaller than *3707 LOAD FREQ 2*.	5 Hz
	0…500 Hz	Frequency	1 = 1 Hz
3705	LOAD TORQ LOW 1	Defines the torque value of the first underload curve definition point. Must be smaller than *3706 LOAD TORQ HIGH 1*.	10%
	0…600%	Torque	1 = 1%
3706	LOAD TORQ HIGH 1	Defines the torque value of the first overload curve definition point	300%

All parameters			
No.	**Name/Value**	**Description**	**Def/FbEq**
	0…600%	Torque	1 = 1%
3707	LOAD FREQ 2	Defines the frequency value of the second load curve definition point. Must be smaller than *3710 LOAD FREQ 3*.	25 Hz
	0…500 Hz	Frequency	1 = 1 Hz
3708	LOAD TORQ LOW 2	Defines the torque value of the second underload curve definition point. Must be smaller than *3709 LOAD TORQ HIGH 2*.	15%
	0…600%	Torque	1 = 1%
3709	LOAD TORQ HIGH 2	Defines the torque value of the second overload curve definition point	300%
	0…600%	Torque	1 = 1%
3710	LOAD FREQ 3	Defines the frequency value of the third load curve definition point. Must be smaller than *3713 LOAD FREQ 4*.	43 Hz
	0…500 Hz	Frequency	1 = 1 Hz
3711	LOAD TORQ LOW 3	Defines the torque value of the third underload curve definition point. Must be smaller than *3712 LOAD TORQ HIGH 3*.	25%
	0…600%	Torque	1 = 1%
3712	LOAD TORQ HIGH 3	Defines the torque value of the third overload curve definition point	300%
	0…600%	Torque	1 = 1%
3713	LOAD FREQ 4	Defines the frequency value of the fourth load curve definition point. Must be smaller than *3716 LOAD FREQ 5*.	50 Hz
	0…500 Hz	Frequency	1 = 1 Hz
3714	LOAD TORQ LOW 4	Defines the torque value of the fourth underload curve definition point. Must be smaller than *3715 LOAD TORQ HIGH 4*.	30%
	0…600%	Torque	1 = 1%
3715	LOAD TORQ HIGH 4	Defines the torque value of the fourth overload curve definition point	300%
	0…600%	Torque	1 = 1%
3716	LOAD FREQ 5	Defines the frequency value of the fifth load curve definition point	500 Hz
	0…500 Hz	Frequency	1 = 1 Hz
3717	LOAD TORQ LOW 5	Defines the torque value of the fifth underload curve definition point. Must be smaller than *3718 LOAD TORQ HIGH 5*.	30%
	0…600%	Torque	1 = 1%
3718	LOAD TORQ HIGH 5	Defines the torque value of the fifth overload curve definition point	300%
	0…600%	Torque	1 = 1%
40 PROCESS PID SET 1		Process PID (PID1) control parameter set 1. See section *PID control* on page *135*.	
4001	GAIN	Defines the gain for the process PID controller. High gain may cause speed oscillation.	1.0

All parameters			
No.	**Name/Value**	**Description**	**Def/FbEq**
	0.1…100.0	Gain. When value is set to 0.1, the PID controller output changes one-tenth as much as the error value. When value is set to 100, the PID controller output changes one hundred times as much as the error value.	1 = 0.1
4002	INTEGRATION TIME	Defines the integration time for the process PID1 controller. The integration time defines the rate at which the controller output changes when the error value is constant. The shorter the integration time, the faster the continuous error value is corrected. Too short an integration time makes the control unstable. A = Error B = Error value step C = Controller output with gain = 1 D = Controller output with gain = 10 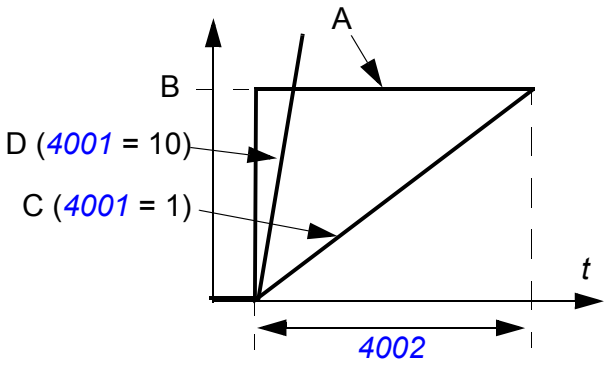 	60.0 s
	0.0 = NOT SEL 0.1…3600.0 s	Integration time. If parameter value is set to zero, integration (I-part of the PID controller) is disabled.	1 = 0.1 s

All parameters			
No.	**Name/Value**	**Description**	**Def/FbEq**
4003	DERIVATION TIME	Defines the derivation time for the process PID controller. Derivative action boosts the controller output if the error value changes. The longer the derivation time, the more the speed controller output is boosted during the change. If the derivation time is set to zero, the controller works as a PI controller, otherwise as a PID controller. The derivation makes the control more responsive for disturbances. The derivative is filtered with a 1-pole filter. Filter time constant is defined by parameter *4004 PID DERIV FILTER*. 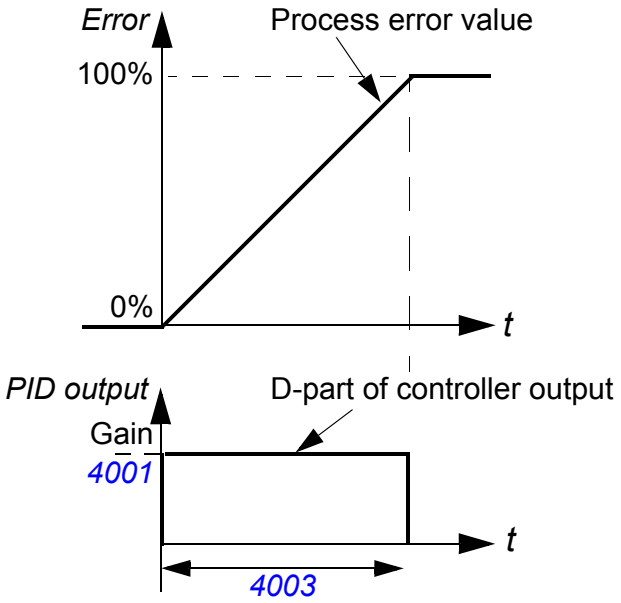 	0.0 s
	0.0…10.0 s	Derivation time. If parameter value is set to zero, the derivative part of the PID controller is disabled.	1 = 0.1 s
4004	PID DERIV FILTER	Defines the filter time constant for the derivative part of the process PID controller. Increasing the filter time smooths the derivative and reduces noise.	1.0 s
	0.0…10.0 s	Filter time constant. If parameter value is set to zero, the derivative filter is disabled.	1 = 0.1 s
4005	ERROR VALUE INV	Selects the relationship between the feedback signal and drive speed.	*NO*
	NO	Normal: A decrease in feedback signal increases drive speed. Error = Reference - Feedback	0
	YES	Inverted: A decrease in feedback signal decreases drive speed. Error = Feedback - Reference	1
4006	UNITS	Selects the unit for PID controller actual values.	%
	0…68	See parameter *3405 OUTPUT1 UNIT* selections.	
4007	UNIT SCALE	Defines the decimal point location for PID controller actual values.	1

<table>
<tr><th colspan="4">All parameters</th></tr>
<tr><th>No.</th><th>Name/Value</th><th>Description</th><th>Def/FbEq</th></tr>
<tr><td></td><td>0…4</td><td>Example: PI (3.141593)
<table>
<tr><th>4007 value</th><th>Entry</th><th>Display</th></tr>
<tr><td>0</td><td>00003</td><td>3</td></tr>
<tr><td>1</td><td>00031</td><td>3.1</td></tr>
<tr><td>2</td><td>00314</td><td>3.14</td></tr>
<tr><td>3</td><td>03142</td><td>3.142</td></tr>
<tr><td>4</td><td>31416</td><td>3.1416</td></tr>
</table></td><td>1 = 1</td></tr>
<tr><td>4008</td><td>0% VALUE</td><td>Defines together with parameter 4009 100% VALUE the scaling applied to the PID controller’s actual values.
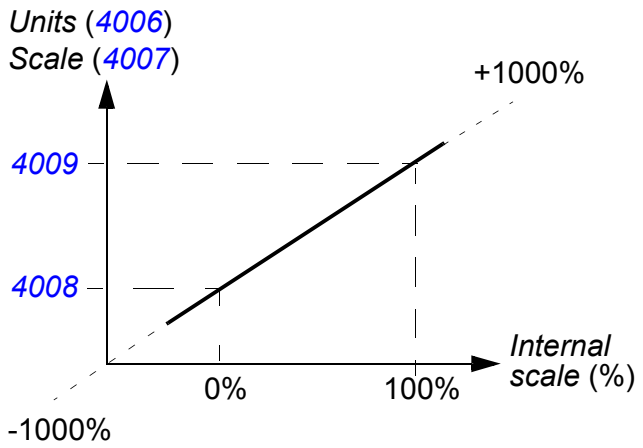
</td><td>0.0</td></tr>
<tr><td></td><td>x…x</td><td>Unit and range depend on the unit and scale defined by parameters 4006 UNITS and 4007 UNIT SCALE.</td><td></td></tr>
<tr><td>4009</td><td>100% VALUE</td><td>Defines together with parameter 4008 0% VALUE the scaling applied to the PID controller’s actual values.</td><td>100.0</td></tr>
<tr><td></td><td>x…x</td><td>Unit and range depend on the unit and scale defined by parameters 4006 UNITS and 4007 UNIT SCALE.</td><td></td></tr>
<tr><td>4010</td><td>SET POINT SEL</td><td>Selects the source for the process PID controller reference signal.</td><td>AI1</td></tr>
<tr><td></td><td>KEYPAD</td><td>Control panel</td><td>0</td></tr>
<tr><td></td><td>AI1</td><td>Analog input AI1</td><td>1</td></tr>
<tr><td></td><td>AI2</td><td>Analog input AI2</td><td>2</td></tr>
<tr><td></td><td>COMM</td><td>Fieldbus reference REF2</td><td>8</td></tr>
<tr><td></td><td>COMM+AI1</td><td>Summation of fieldbus reference REF2 and analog input AI1. See section Reference selection and correction on page 284.</td><td>9</td></tr>
<tr><td></td><td>COMM*AI1</td><td>Multiplication of fieldbus reference REF2 and analog input AI1. See section Reference selection and correction on page 284.</td><td>10</td></tr>
<tr><td></td><td>DI3U,4D(RNC)</td><td>Digital input DI3: Reference increase. Digital input DI4: Reference decrease. Stop command resets the reference to zero. The reference is not saved if the control source is changed from EXT1 to EXT2, from EXT2 to EXT1 or from LOC to REM.</td><td>11</td></tr>
</table>

All parameters			
No.	**Name/Value**	**Description**	**Def/FbEq**
	DI3U,4D(NC)	Digital input DI3: Reference increase. Digital input DI4: Reference decrease. The program stores the active reference (not reset by a stop command). The reference is not saved if the control source is changed from EXT1 to EXT2, from EXT2 to EXT1 or from LOC to REM.	12
	AI1+AI2	Reference is calculated with the following equation: REF = AI1(%) + AI2(%) - 50%	14
	AI1*AI2	Reference is calculated with the following equation: REF = AI(%) · (AI1(%) / 50%)	15
	AI1-AI2	Reference is calculated with the following equation: REF = AI1(%) + 50% - AI2(%)	16
	AI1/AI2	Reference is calculated with the following equation: REF = AI1(%) · (50% / AI2 (%))	17
	INTERNAL	A constant value defined by parameter *4011 INTERNAL SETPNT*, *4036 INTERNAL SETPNT2*, *4037 INTERNAL SETPNT3* or *4038 INTERNAL SETPNT4*. See also parameter *4039 INT SETPNT SEL*.	19
	DI4U,5D(NC)	See selection *DI3U,4D(NC)*.	31
	FREQ INPUT	Frequency input	32
4011	INTERNAL SETPNT	Selects a constant value as process PID controller reference, when parameter *4010 SET POINT SEL* value is set to *INTERNAL*.	40
	x…x	Unit and range depend on the unit and scale defined by parameters *4006 UNITS* and *4007 UNIT SCALE*.	
4012	SETPOINT MIN	Defines the minimum value for the selected PID reference signal source. See parameter *4010 SET POINT SEL*.	0.0%
	-500.0…500.0%	Value in percent. **Example:** Analog input AI1 is selected as the PID reference source (value of parameter *4010* is *AI1*). The reference minimum and maximum correspond to the *1301 MINIMUM AI1* and *1302 MAXIMUM AI1* settings as follows: 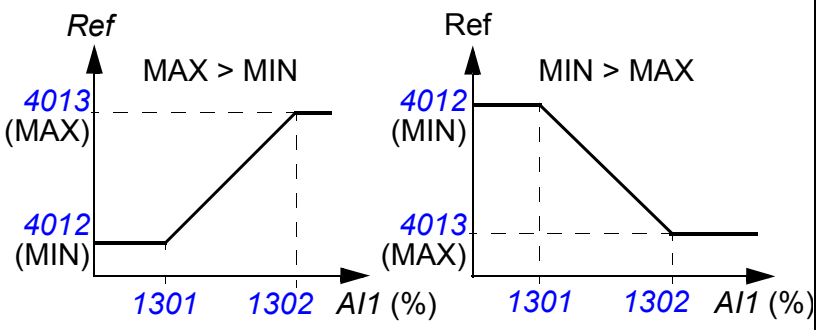 	1 = 0.1%
4013	SETPOINT MAX	Defines the maximum value for the selected PID reference signal source. See parameters *4010 SET POINT SEL* and *4012 SETPOINT MIN*.	100.0%
	-500.0…500.0%	Value in percent	1 = 0.1%
4014	FBK SEL	Selects the process actual value (feedback signal) for the process PID controller: The sources for the variables ACT1 and ACT2 are further defined by parameters *4016 ACT1 INPUT* and *4017 ACT2 INPUT*.	*ACT1*
	ACT1	ACT1	1

All parameters			
No.	**Name/Value**	**Description**	**Def/FbEq**
	ACT1-ACT2	Subtraction of ACT1 and ACT2	2
	ACT1+ACT2	Addition of ACT1 and ACT2	3
	ACT1*ACT2	Multiplication of ACT1 and ACT2	4
	ACT1/ACT2	Division of ACT1 and ACT2	5
	MIN(ACT1,2)	Selects the smaller of ACT1 and ACT2	6
	MAX(ACT1,2)	Selects the higher of ACT1 and ACT2	7
	sqrt(ACT1-2)	Square root of the subtraction of ACT1 and ACT2	8
	sqA1+sqA2	Addition of the square root of ACT1 and the square root of ACT2	9
	sqrt(ACT1)	Square root of ACT1	10
	COMM FBK 1	Signal *0158 PID COMM VALUE 1* value	11
	COMM FBK 2	Signal *0159 PID COMM VALUE 2* value	12
	AVE(ACT1,2)	Average of ACT1 and ACT2	13
4015	FBK MULTIPLIER	Defines an extra multiplier for the value defined by parameter *4014 FBK SEL*. Parameter is used mainly in applications where feedback value is calculated from another variable (eg flow from pressure difference).	0.000
	-32.768… 32.767	Multiplier. If parameter value is set to zero, no multiplier is used.	1 = 0.001
4016	ACT1 INPUT	Defines the source for actual value 1 (ACT1). See also parameter *4018 ACT1 MINIMUM*.	*AI2*
	AI1	Uses analog input 1 for ACT1	1
	AI2	Uses analog input 2 for ACT1	2
	CURRENT	Uses current for ACT1	3
	TORQUE	Uses torque for ACT1	4
	POWER	Uses power for ACT1	5
	COMM ACT 1	Uses value of signal *0158 PID COMM VALUE 1* for ACT1	6
	COMM ACT 2	Uses value of signal *0159 PID COMM VALUE 2* for ACT1	7
	FREQ INPUT	Frequency input	8
4017	ACT2 INPUT	Defines the source for actual value ACT2. See also parameter *4020 ACT2 MINIMUM*.	*AI2*
		See parameter *4016 ACT1 INPUT*.	

<table>
<tr><th colspan="4">All parameters</th></tr>
<tr><th>No.</th><th>Name/Value</th><th>Description</th><th>Def/FbEq</th></tr>
<tr><td>4018</td><td>ACT1 MINIMUM</td><td>Sets the minimum value for ACT1.
Scales the source signal used as the actual value ACT1 (defined by parameter 4016 ACT1 INPUT). For parameter 4016 values 6 (COMM ACT 1) and 7 (COMM ACT 2) scaling is not done.
<table>
<tr><th>Par 4016</th><th>Source</th><th>Source min.</th><th>Source max.</th></tr>
<tr><td>1</td><td>Analog input 1</td><td>1301 MINIMUM AI1</td><td>1302 MAXIMUM AI1</td></tr>
<tr><td>2</td><td>Analog input 2</td><td>1304 MINIMUM AI2</td><td>1305 MAXIMUM AI2</td></tr>
<tr><td>3</td><td>Current</td><td>0</td><td>2 · nominal current</td></tr>
<tr><td>4</td><td>Torque</td><td>-2 · nominal torque</td><td>2 · nominal torque</td></tr>
<tr><td>5</td><td>Power</td><td>-2 · nominal power</td><td>2 · nominal power</td></tr>
</table>
A = Normal; B = Inversion (ACT1 minimum > ACT1 maximum)
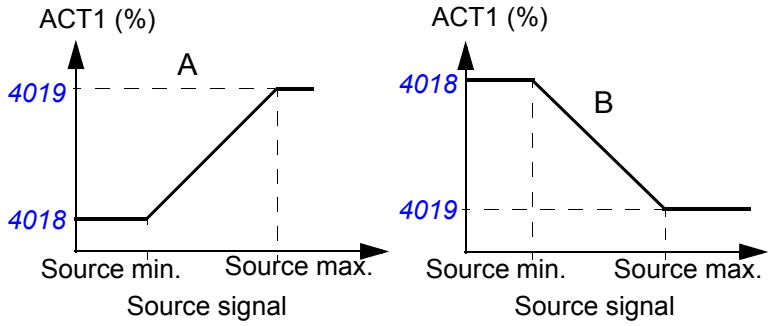
</td><td>0%</td></tr>
<tr><td></td><td>-1000…1000%</td><td>Value in percent</td><td>1 = 1%</td></tr>
<tr><td>4019</td><td>ACT1 MAXIMUM</td><td>Defines the maximum value for variable ACT1 if an analog input is selected as a source for ACT1. See parameter 4016 ACT1 INPUT. The minimum (4018 ACT1 MINIMUM) and maximum settings of ACT1 define how the voltage/current signal received from the measuring device is converted to a percentage value used by the process PID controller.
See parameter 4018 ACT1 MINIMUM.</td><td>100%</td></tr>
<tr><td></td><td>-1000…1000%</td><td>Value in percent</td><td>1 = 1%</td></tr>
<tr><td>4020</td><td>ACT2 MINIMUM</td><td>See parameter 4018 ACT1 MINIMUM.</td><td>0%</td></tr>
<tr><td></td><td>-1000…1000%</td><td>See parameter 4018.</td><td>1 = 1%</td></tr>
<tr><td>4021</td><td>ACT2 MAXIMUM</td><td>See parameter 4019 ACT1 MAXIMUM.</td><td>100%</td></tr>
<tr><td></td><td>-1000…1000%</td><td>See parameter 4019.</td><td>1 = 1%</td></tr>
<tr><td>4022</td><td>SLEEP SELECTION</td><td>Activates the sleep function and selects the source for the activation input. See section Sleep function for the process PID (PID1) control on page 140.</td><td>NOT SEL</td></tr>
<tr><td></td><td>NOT SEL</td><td>No sleep function selected</td><td>0</td></tr>
<tr><td></td><td>DI1</td><td>The function is activated/deactivated through digital input DI1.1 = activation, 0 = deactivation.
The internal sleep criteria set by parameters 4023 PID SLEEP LEVEL and 4025 WAKE-UP DEV are not effective. The sleep start and stop delay parameters 4024 PID SLEEP DELAY and 4026 WAKE-UP DELAY are effective.</td><td>1</td></tr>
<tr><td></td><td>DI2</td><td>See selection DI1.</td><td>2</td></tr>
</table>

All parameters			
No.	**Name/Value**	**Description**	**Def/FbEq**
	DI3	See selection *DI1*.	3
	DI4	See selection *DI1*.	4
	DI5	See selection *DI1*.	5
	INTERNAL	Activated and deactivated automatically as defined by parameters *4023 PID SLEEP LEVEL* and *4025 WAKE-UP DEV*.	7
	SUPRV1 OVER	The function is activated when parameter *3201 SUPERV 1 PARAM* stays over the high limit defined by parameter *3203 SUPERV 1 LIM HI*. The internal sleep criteria set by parameters *4023 PID SLEEP LEVEL* and *4025 WAKE-UP DEV* are not effective. The sleep start and stop delay parameters *4024 PID SLEEP DELAY* and *4026 WAKE-UP DELAY* are effective.	9
	SUPRV2 OVER	See selection *SUPRV1 OVER*.	10
	SUPRV3 OVER	See selection *SUPRV1 OVER*.	11
	DI1(INV)	The function is activated/deactivated through inverted digital input DI1. 1 = deactivation, 0 = activation. The internal sleep criteria set by parameters *4023 PID SLEEP LEVEL* and *4025 WAKE-UP DEV* are not effective. The sleep start and stop delay parameters *4024 PID SLEEP DELAY* and *4026 WAKE-UP DELAY* are effective.	-1
	DI2(INV)	See selection *DI1(INV)*.	-2
	DI3(INV)	See selection *DI1(INV)*.	-3
	DI4(INV)	See selection *DI1(INV)*.	-4
	DI5(INV)	See selection *DI1(INV)*.	-5
	SUPRV1 UNDER	The function is activated when parameter *3201 SUPERV 1 PARAM* stays below the low limit defined by parameter *3202 SUPERV 1 LIM LO*. The internal sleep criteria set by parameters *4023 PID SLEEP LEVEL* and *4025 WAKE-UP DEV* are not effective. The sleep start and stop delay parameters *4024 PID SLEEP DELAY* and *4026 WAKE-UP DELAY* are effective.	-9
	SUPRV2 UNDER	See selection *SUPRV1 UNDER*.	-10
	SUPRV3 UNDER	See selection *SUPRV1 UNDER*.	-11

All parameters			
No.	**Name/Value**	**Description**	**Def/FbEq**
4023	PID SLEEP LEVEL	Defines the start limit for the sleep function. If the motor speed is below a set level (*4023*) longer than the sleep delay (*4024*), the drive shifts to the sleeping mode: The motor is stopped and the control panel shows alarm message *PID SLEEP*. Parameter *4022 SLEEP SELECTION* must be set to *INTERNAL*. 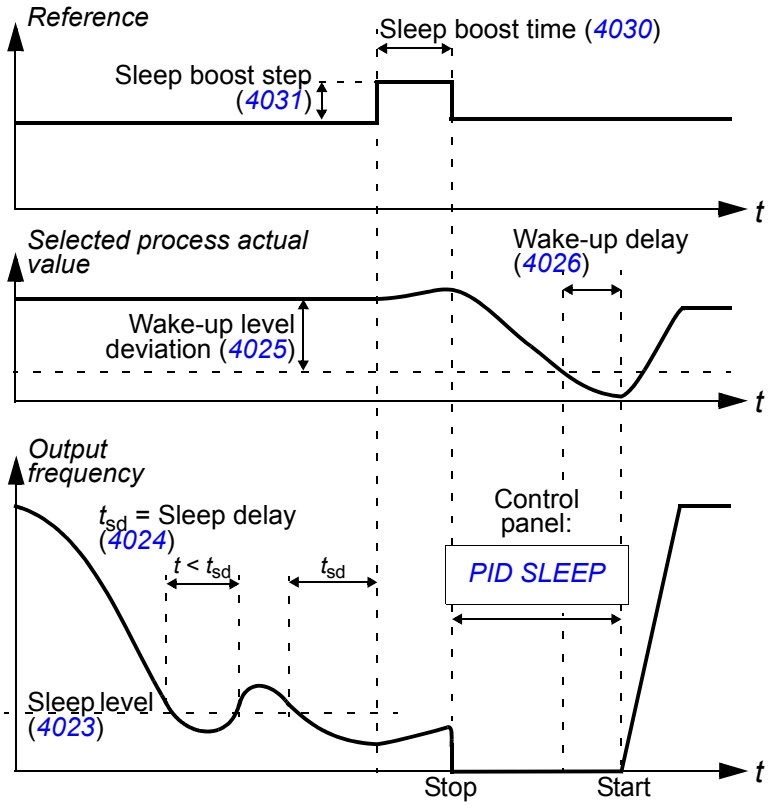 	0.0 Hz
	0.0…500.0 Hz	Sleep start level	1 = 0.1 Hz
4024	PID SLEEP DELAY	Defines the delay for the sleep start function. See parameter *4023 PID SLEEP LEVEL*. When the motor speed falls below the sleep level, the counter starts. When the motor speed exceeds the sleep level, the counter is reset.	60.0 s
	0.0…3600.0 s	Sleep start delay	1 = 0.1 s

All parameters			
No.	**Name/Value**	**Description**	**Def/FbEq**
4025	WAKE-UP DEV	Defines the wake-up deviation for the sleep function. The drive wakes up if the process actual value deviation from the PID reference value exceeds the set wake-up deviation (*4025*) longer than the wake-up delay (*4026*). Wake-up level depends on parameter *4005 ERROR VALUE INV* settings. If parameter *4005* is set to 0: Wake-up level = PID reference (*4010*) - Wake-up deviation (*4025*). If parameter *4005* is set to 1: Wake-up level = PID reference (*4010*) + Wake-up deviation (*4025*) 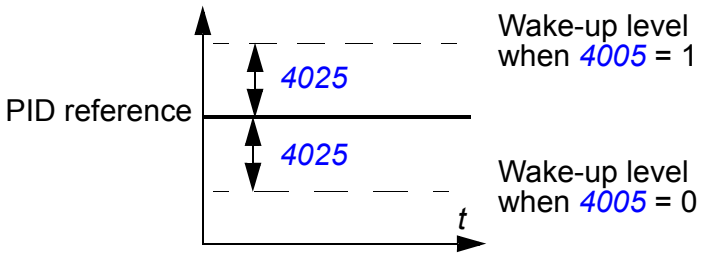 See also figures for parameter *4023 PID SLEEP LEVEL*.	0
	x…x	Unit and range depend on the unit and scale defined by parameters *4026 WAKE-UP DELAY* and *4007 UNIT SCALE*.	
4026	WAKE-UP DELAY	Defines the wake-up delay for the sleep function. See parameter *4023 PID SLEEP LEVEL*.	0.50 s
	0.00…60.00 s	Wake-up delay	1 = 0.01 s
4027	PID 1 PARAM SET	Defines the source from which the drive reads the signal that selects between PID parameter set 1 and 2. PID parameter set 1 is defined by parameters *4001*…*4026*. PID parameter set 2 is defined by parameters *4101*…*4126*.	*SET 1*
	SET 1	PID SET 1 is active.	0
	DI1	Digital input DI1. 1 = PID SET 2, 0 = PID SET 1.	1
	DI2	See selection *DI1*.	2
	DI3	See selection *DI1*.	3
	DI4	See selection *DI1*.	4
	DI5	See selection *DI1*.	5
	SET 2	PID SET 2 is active.	7
	TIMED FUNC 1	Timed PID SET 1/2 control. Timed function 1 inactive = PID SET 1, timed function 1 active = PID SET 2. See parameter group *36 TIMED FUNCTIONS*.	8
	TIMED FUNC 2	See selection *TIMED FUNC 1*.	9
	TIMED FUNC 3	See selection *TIMED FUNC 1*.	10
	TIMED FUNC 4	See selection *TIMED FUNC 1*.	11
	DI1(INV)	Inverted digital input DI1. 0 = PID SET 2, 1 = PID SET 1.	-1
	DI2(INV)	See selection *DI1(INV)*.	-2
	DI3(INV)	See selection *DI1(INV)*.	-3
	DI4(INV)	See selection *DI1(INV)*.	-4
	DI5(INV)	See selection *DI1(INV)*.	-5

All parameters			
No.	**Name/Value**	**Description**	**Def/FbEq**
4028	PID OUT MIN	Defines the minimum value of PID output.	-100.0%
	-500.0…500.0%	Value in percent	1 = 0.1%
4029	PID OUT MAX	Defines the maximum value of PID output.	100.0%
	-500.0…500.0%	Value in percent	1 = 0.1%
4030	SLEEP BOOST TIME	Defines the boost time for the sleep boost step. See parameter *4031 SLEEP BOOST STEP*. 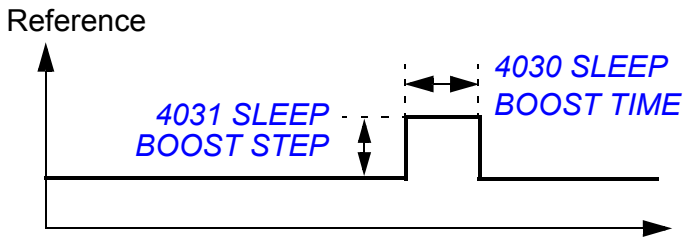 	0.0 s
	0.0…3600.0 s	Sleep boost time	1 = 0.1 s
4031	SLEEP BOOST STEP	When the drive is entering sleep mode, the reference (PID setpoint) is increased by this percentage for the time defined by parameter *4030 SLEEP BOOST TIME*.	0.0%
	0.0…100.0%	Sleep boost step	1 = 0.1%
4032	PID REF ACC TIME	Defines the time for the reference (PID setpoint) increase from 0 to 100%. **Note:** Parameters *4032*…*4036* are active even if the process PID set 2 (group *41 PROCESS PID SET 2*) is used.	0.0 s
	0.0…1800.0 s	Acceleration time	1 = 0.1 s
4033	PID REF DEC TIME	Defines the time for the reference (PID setpoint) decrease from 100 to 0%	0.0 s
	0.0…1800.0 s	Deceleration time	1 = 0.1 s
4034	PID REF FREEZE	Freezes the input (reference, PID setpoint) of the process PID controller. This feature is useful when the reference is based on a process actual value connected to an analog input, and the sensor must be serviced without stopping the process. The input of the PID controller is frozen as long as the selected digital input is ON for parameter values *DI1*…*DI5* or OFF for parameter values *DI1(INV)*…*DI5(INV)*. See also parameter *4035*.	*NOT SEL*
	NOT SEL	Not selected	0
	DI1	Reference is frozen on the rising edge of digital input DI1.	1
	DI2	See selection *DI1*.	2
	DI3	See selection *DI1*.	3
	DI4	See selection *DI1*.	4
	DI5	See selection *DI1*.	5
	DI1(INV)	Reference is frozen on the falling edge of digital input DI1.	-1
	DI2(INV)	See selection *DI1(INV)*.	-2
	DI3(INV)	See selection *DI1(INV)*.	-3
	DI4(INV)	See selection *DI1(INV)*.	-4

All parameters			
No.	**Name/Value**	**Description**	**Def/FbEq**
	DI5(INV)	See selection *DI1(INV)*.	-5
4035	PID OUT FREEZE	Freezes the output of the process PID controller. This feature is useful when the reference is based on a process actual value connected to an analog input, and the sensor must be serviced without stopping the process. The output of the PID controller is frozen as long as the selected digital input is ON for parameter values *DI1*…*DI5* or OFF for parameter values *DI1(INV)*…*DI5(INV)*. See also parameter *4034*.	*NOT SEL*
	NOT SEL	Not selected	0
	DI1	Output is frozen on the rising edge of digital input DI1.	1
	DI2	See selection *DI1*.	2
	DI3	See selection *DI1*.	3
	DI4	See selection *DI1*.	4
	DI5	See selection *DI1*.	5
	DI1(INV)	Output is frozen on the falling edge of digital input DI1.	-1
	DI2(INV)	See selection *DI1(INV)*.	-2
	DI3(INV)	See selection *DI1(INV)*.	-3
	DI4(INV)	See selection *DI1(INV)*.	-4
	DI5(INV)	See selection *DI1(INV)*.	-5
4036	INTERNAL SETPNT2	Selects a constant value as the process PID controller reference, which becomes active when parameter *4010 SET POINT SEL* value is set to *INTERNAL* and setpoint 2 is selected with the input defined by parameter *4039 INT SETPNT SEL*.	40.0%
	-100.0…100.0%	Value in percent	1 = 0.1%
4037	INTERNAL SETPNT3	Selects a constant value as the process PID controller reference, which becomes active when parameter *4010 SET POINT SEL* value is set to *INTERNAL* and setpoint 3 is selected with the input defined by parameter *4039 INT SETPNT SEL*.	40.0%
	-100.0…100.0%	Value in percent	1 = 0.1%
4038	INTERNAL SETPNT4	Selects a constant value as the process PID controller reference, which becomes active when parameter *4010 SET POINT SEL* value is set to *INTERNAL* and setpoint 4 is selected with the input defined by parameter *4039 INT SETPNT SEL*.	40.0%
	-100.0…100.0%	Value in percent	1 = 0.1%
4039	INT SETPNT SEL	Selects the source for the selection of the internal setpoint used as the process PID controller reference when parameter *4010 SET POINT SEL* value is set to *INTERNAL*. **Example:** *4010 SET POINT SEL* = *INTERNAL* *4039 INT SETPNT SEL* = *DI2* Digital input DI2 = 1 -> *4036 INTERNAL SETPNT2* is used as the reference.	*NOT SEL*
	NOT SEL	*4011 INTERNAL SETPNT* is used as the reference.	0

All parameters			
No.	**Name/Value**	**Description**	**Def/FbEq**
	DI1	0 = *4011 INTERNAL SETPNT* is used. 1 = *4036 INTERNAL SETPNT2* is used.	1
	DI2	See selection *DI1*.	2
	DI3	See selection *DI1*.	3
	DI4	See selection *DI1*.	4
	DI5	See selection *DI1*.	5
	DI1,2	Selects with digital inputs DI1 and DI2 which internal setpoint is used as the reference. 1 = DI active, 0 = DI inactive. **DI1 / DI2 / Internal setpoint selected** 0 / 0 / *4011 INTERNAL SETPNT* 1 / 0 / *4036 INTERNAL SETPNT2* 0 / 1 / *4037 INTERNAL SETPNT3* 1 / 1 / *4038 INTERNAL SETPNT4*	7
	DI2,3	See selection *DI1,2*.	8
	DI3,4	See selection *DI1,2*.	9
	DI4,5	See selection *DI1,2*.	10
	TIMED FUNC 1	0 = *4011 INTERNAL SETPNT* is used. 1 = *4036 INTERNAL SETPNT2* is used.	15
	TIMED FUNC 2	See selection *TIMED FUNC 1*.	16
	TIMED FUNC 3	See selection *TIMED FUNC 1*.	17
	TIMED FUNC 4	See selection *TIMED FUNC 1*.	18
	TIMED FUN1&2	Selects with timed functions 1 and 2 which internal setpoint is used as the reference. 1 = timed function active, 0 = timed function inactive. **Timed function 1 / Timed function 2 / Internal setpoint selected** 0 / 0 / *4011 INTERNAL SETPNT* 1 / 0 / *4036 INTERNAL SETPNT2* 0 / 1 / *4037 INTERNAL SETPNT3* 1 / 1 / *4038 INTERNAL SETPNT4*	19
41 PROCESS PID SET 2		Process PID (PID1) control parameter set 2. See section *PID control* on page *135*.	
4101	GAIN	See parameter *4001 GAIN*.	
4102	INTEGRATION TIME	See parameter *4002 INTEGRATION TIME*.	
4103	DERIVATION TIME	See parameter *4003 DERIVATION TIME*.	
4104	PID DERIV FILTER	See parameter *4004 PID DERIV FILTER*.	
4105	ERROR VALUE INV	See parameter *4005 ERROR VALUE INV*.	
4106	UNITS	See parameter *4006 UNITS*.	
4107	UNIT SCALE	See parameter *4007 UNIT SCALE*.	

All parameters			
No.	**Name/Value**	**Description**	**Def/FbEq**
4108	0% VALUE	See parameter *4008 0% VALUE*.	
4109	100% VALUE	See parameter *4009 100% VALUE*.	
4110	SET POINT SEL	See parameter *4010 SET POINT SEL*.	
4111	INTERNAL SETPNT	See parameter *4011 INTERNAL SETPNT*.	
4112	SETPOINT MIN	See parameter *4012 SETPOINT MIN*.	
4113	SETPOINT MAX	See parameter *4013 SETPOINT MAX*.	
4114	FBK SEL	See parameter *4014 FBK SEL*.	
4115	FBK MULTIPLIER	See parameter *4015 FBK MULTIPLIER*.	
4116	ACT1 INPUT	See parameter *4016 ACT1 INPUT*.	
4117	ACT2 INPUT	See parameter *4017 ACT2 INPUT*.	
4118	ACT1 MINIMUM	See parameter *4018 ACT1 MINIMUM*.	
4119	ACT1 MAXIMUM	See parameter *4019 ACT1 MAXIMUM*.	
4120	ACT2 MINIMUM	See parameter *4020 ACT2 MINIMUM*.	
4121	ACT2 MAXIMUM	See parameter *4021 ACT2 MAXIMUM*.	
4122	SLEEP SELECTION	See parameter *4022 SLEEP SELECTION*.	
4123	PID SLEEP LEVEL	See parameter *4023 PID SLEEP LEVEL*.	
4124	PID SLEEP DELAY	See parameter *4024 PID SLEEP DELAY*.	
4125	WAKE-UP DEV	See parameter *4025 WAKE-UP DEV*.	
4126	WAKE-UP DELAY	See parameter *4026 WAKE-UP DELAY*.	
4128	PID OUT MIN	See parameter *4028 PID OUT MIN*.	
4129	PID OUT MAX	See parameter *4029 PID OUT MAX*.	
4130	SLEEP BOOST TIME	See parameter *4030 SLEEP BOOST TIME*.	
4131	SLEEP BOOST STEP	See parameter *4031 SLEEP BOOST STEP*.	
4136	INTERNAL SETPNT2	See parameter *4036 INTERNAL SETPNT2*.	
4137	INTERNAL SETPNT3	See parameter *4037 INTERNAL SETPNT3*.	
4138	INTERNAL SETPNT4	See parameter *4038 INTERNAL SETPNT4*.	
4139	INT SETPNT SEL	See parameter *4039 INT SETPNT SEL*.	

All parameters			
No.	**Name/Value**	**Description**	**Def/FbEq**
42 EXT / TRIM PID		External/Trim PID (PID2) control. See section *PID control* on page *135*.	
4201	GAIN	See parameter *4001 GAIN*.	
4202	INTEGRATION TIME	See parameter *4002 INTEGRATION TIME*.	
4203	DERIVATION TIME	See parameter *4003 DERIVATION TIME*.	
4204	PID DERIV FILTER	See parameter *4004 PID DERIV FILTER*.	
4205	ERROR VALUE INV	See parameter *4005 ERROR VALUE INV*.	
4206	UNITS	See parameter *4006 UNITS*.	
4207	UNIT SCALE	See parameter *4007 UNIT SCALE*.	
4208	0% VALUE	See parameter *4008 0% VALUE*.	
4209	100% VALUE	See parameter *4009 100% VALUE*.	
4210	SET POINT SEL	See parameter *4010 SET POINT SEL*.	
4211	INTERNAL SETPNT	See parameter *4011 INTERNAL SETPNT*.	
4212	SETPOINT MIN	See parameter *4012 SETPOINT MIN*.	
4213	SETPOINT MAX	See parameter *4013 SETPOINT MAX*.	
4214	FBK SEL	See parameter *4014 FBK SEL*.	
4215	FBK MULTIPLIER	See parameter *4015 FBK MULTIPLIER*.	
4216	ACT1 INPUT	See parameter *4016 ACT1 INPUT*.	
4217	ACT2 INPUT	See parameter *4017 ACT2 INPUT*.	
4218	ACT1 MINIMUM	See parameter *4018 ACT1 MINIMUM*.	
4219	ACT1 MAXIMUM	See parameter *4019 ACT1 MAXIMUM*.	
4220	ACT2 MINIMUM	See parameter *4020 ACT2 MINIMUM*.	
4221	ACT2 MAXIMUM	See parameter *4021 ACT2 MAXIMUM*.	
4228	ACTIVATE	Selects the source for the external PID function activation signal. Parameter *4230 TRIM MODE* must be set to *NOT SEL*.	*NOT SEL*
	NOT SEL	No external PID control activation selected	0
	DI1	Digital input DI1. 1 = active, 0 = inactive.	1
	DI2	See selection *DI1*.	2
	DI3	See selection *DI1*.	3
	DI4	See selection *DI1*.	4
	DI5	See selection *DI1*.	5

All parameters			
No.	**Name/Value**	**Description**	**Def/FbEq**
	DRIVE RUN	Activation at drive start. Start (drive running) = active.	7
	ON	Activation at drive power-up. Power-up (drive powered) = active.	8
	TIMED FUNC 1	Activation by a timed function. Timed function 1 active = PID control active. See parameter group *36 TIMED FUNCTIONS*.	9
	TIMED FUNC 2	See selection *TIMED FUNC 1*.	10
	TIMED FUNC 3	See selection *TIMED FUNC 1*.	11
	TIMED FUNC 4	See selection *TIMED FUNC 1*.	12
	DI1(INV)	Inverted digital input DI1. 0 = active, 1 = inactive.	-1
	DI2(INV)	See selection *DI1(INV)*.	-2
	DI3(INV)	See selection *DI1(INV)*.	-3
	DI4(INV)	See selection *DI1(INV)*.	-4
	DI5(INV)	See selection *DI1(INV)*.	-5
4229	OFFSET	Defines the offset for the external PID controller output. When PID controller is activated, controller output starts from the offset value. When PID controller is deactivated, controller output is reset to the offset value. Parameter *4230 TRIM MODE* must be set to *NOT SEL*.	0.0%
	0.0…100.0%	Value in percent	1 = 0.1%
4230	TRIM MODE	Activates the trim function and selects between the direct and proportional trimming. With trimming it is possible to combine a corrective factor to the drive reference. See section *Reference trimming* on page *121*.	*NOT SEL*
	NOT SEL	No trim function selected	0
	PROPORTIONAL	Active. The trimming factor is proportional to the rpm/Hz reference before trimming (REF1).	1
	DIRECT	Active. The trimming factor is relative to a fixed maximum limit used in the reference control loop (maximum speed, frequency or torque).	2
4231	TRIM SCALE	Defines the multiplier for the trimming function. See section *Reference trimming* on page *121*.	0.0%
	-100.0…100.0%	Multiplier	1 = 0.1%
4232	CORRECTION SRC	Selects the trim reference. See section *Reference trimming* on page *121*.	*PID2REF*
	PID2REF	PID2 reference selected by parameter *4210* (ie signal *0129 PID 2 SETPNT* value)	1
	PID2OUTPUT	PID2 output, ie signal *0127 PID 2 OUTPUT* value	2
44 PUMP PROTECTION		Set-up of pump protection.	
4401	INLET PROT CTRL	Enables, and selects the mode of, the primary supervision of pump/fan inlet pressure. **Note:** Inlet protection is active only when the active reference is PID.	*NOT SEL*
	NOT SEL	Primary inlet pressure supervision not used	0
	ALARM	Detection of low inlet pressure generates an alarm on the control panel display.	1

All parameters			
No.	**Name/Value**	**Description**	**Def/FbEq**
	PROTECT	Detection of low inlet pressure generates an alarm on the control panel display. The output of the PI controller is ramped down (according to parameter *4417 PID OUT DEC TIME*) to the forced reference (set by parameter *4408 INLET FORCED REF*). The drive reverts to the original reference if the pressure subsequently exceeds the supervision level. The following diagram describes the inlet pressure supervision function. 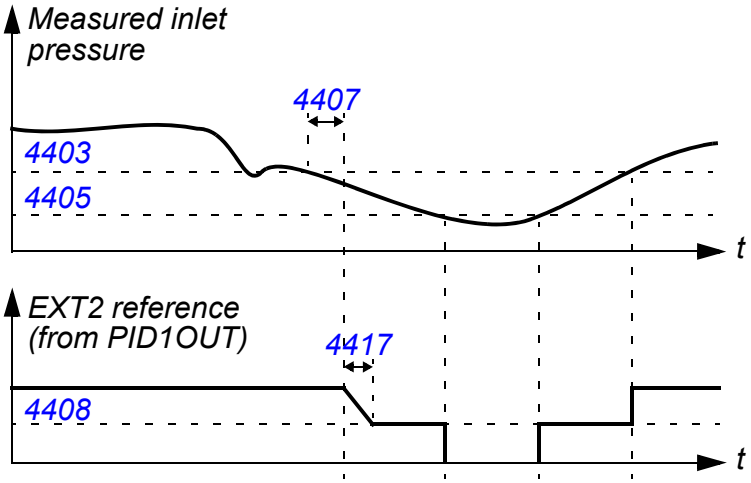 	2
	FAULT	Detection of low inlet pressure trips the drive on a fault.	3
4402	AI MEASURE INLET	Selects the analog input for pump/fan inlet pressure supervision.	*NOT SEL*
	NOT SEL	No analog input selected	0
	AI1	Pump/fan inlet pressure monitored through analog input AI1	1
	AI2	See selection *AI1*.	2
4403	AI IN LOW LEVEL	Sets the supervision limit for the primary inlet pressure measurement. If the value of the selected input falls below this limit, the action defined by parameter *4401 INLET PROT CTRL* is taken after the delay set by parameter *4407 INLET CTRL DLY* expires.	0.00%
	0.00…100.00%	The range corresponds to 0…10 V or 0…20 mA on the analog input. With a bipolar input, the absolute input value is considered.	1 = 0.01%
4404	VERY LOW CTRL	Enables, and selects the mode of, the secondary inlet pressure supervision function. The function uses the analog input selected by parameter *4402 AI MEASURE INLET*.	*NOT SEL*
	NOT SEL	Secondary inlet pressure supervision not used	0
	STOP	Detection of very low inlet pressure stops the drive. The drive starts again if the pressure exceeds the supervision level.	1
	FAULT	Detection of very low inlet pressure trips the drive on a fault.	2
4405	AI IN VERY LOW	Supervision level for the secondary inlet pressure monitoring function. See parameter *4401 INLET PROT CTRL*.	0.00%
	0.00…100.00%	Supervision level	1 = 0.01%

All parameters			
No.	**Name/Value**	**Description**	**Def/FbEq**
4406	DI STATUS INLET	Selects the digital input for connection of a pressure switch at the pump/fan inlet. The “normal” state is 1 (active). If the selected input switches to 0 (inactive), the action defined by parameter *4401 INLET PROT CTRL* is executed after the delay set by parameter *4407 INLET CTRL DLY* expires.	*NOT SEL*
	NOT SEL	No digital input selected	0
	DI1	Pump/fan inlet pressure monitored through digital input DI1	1
	DI2	See selection DI1.	2
	DI3	See selection DI1.	3
	DI4	See selection DI1.	4
	DI5	See selection DI1.	5
4407	INLET CTRL DLY	Sets the delay after which the action defined by parameter *4401 INLET PROT CTRL* is taken on detection of low inlet pressure	60.0 s
	0.1…1800.0 s	Delay time	1 = 0.1 s
4408	INLET FORCED REF	This reference is used after detection of low inlet pressure. See parameter *4401 INLET PROT CTRL*. ⚠ **WARNING!** Make sure that it is safe to continue operation using this reference.	0.0%
	0.0…100.0%	Forced reference	1 = 0.1%
4409	OUTLET PROT CTRL	Enables, and selects the mode of, the primary supervision of pump/fan outlet pressure. **Note:** Outlet protection is active only when the active reference is PID.	*NOT SEL*
	NOT SEL	Primary outlet pressure supervision not used	0
	ALARM	Detection of high outlet pressure produces an alarm on the control panel display.	1

All parameters			
No.	**Name/Value**	**Description**	**Def/FbEq**
	PROTECT	Detection of high outlet pressure produces an alarm on the control panel display. The output of the PI controller is ramped down (according to parameter *4417 PID OUT DEC TIME*) to the forced reference (set by parameter *4416 OUTLET FORCED REF*). The drive reverts to the original reference if the pressure subsequently falls below the supervision level. The following diagram describes the outlet pressure supervision function. 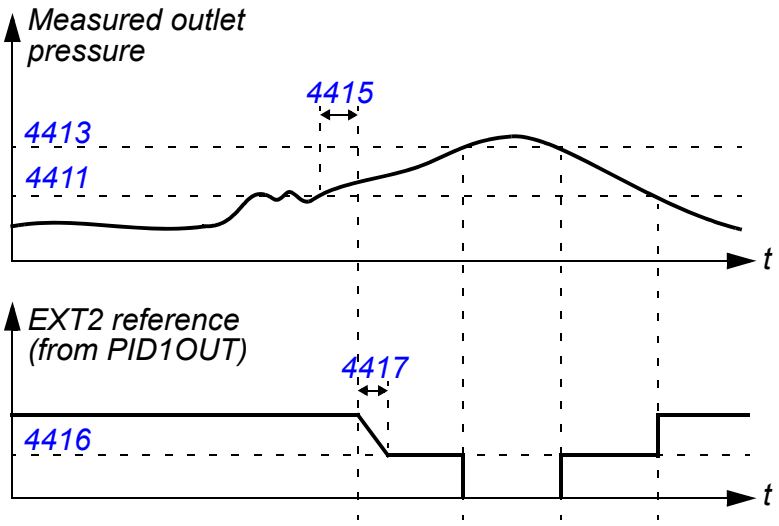 	2
	FAULT	Detection of high outlet pressure trips the drive on a fault.	3
4410	AI MEAS OUTLET	Selects the analog input for pump/fan outlet pressure supervision.	*NOT SEL*
	NOT SEL	No analog input selected	0
	AI1	Pump/fan outlet pressure monitored through analog input AI1	1
	AI2	See selection *AI1*.	2
4411	AI OUT HI LEVEL	Sets the supervision limit for the primary outlet pressure measurement. If the value of the selected analog input exceeds this limit, the action defined by parameter *4409 OUTLET PROT CTRL* is taken after a delay set with parameter *4415 OUTLET CTRL DLY* expires.	100.00%
	0.00…100.00%	Supervision level	1 = 0.01%
4412	VERY HIGH CTRL	Enables, and selects the mode of, the secondary outlet pressure supervision function. The function uses the analog input selected by parameter *4410 AI MEAS OUTLET*.	*NOT SEL*
	NOT SEL	Secondary outlet pressure monitoring not used	0
	STOP	Detection of very high outlet pressure stops the drive. The drive starts again if the pressure falls below the supervision level.	1
	FAULT	Detection of very high outlet pressure trips the drive on a fault.	2
4413	AI OUT VERY HIGH	Supervision level for secondary outlet pressure monitoring function. See parameter *4409 OUTLET PROT CTRL*.	100.00%
	0.00…100.00%	Supervision level	1 = 0.01%

All parameters			
No.	**Name/Value**	**Description**	**Def/FbEq**
4414	DI STATUS OUTLET	Selects the digital input for connection of a pressure switch at the pump/fan outlet. The “normal” state is 1 (active). If the selected input switches to 0 (inactive), the action defined by parameter *4409 OUTLET PROT CTRL* is taken after a delay set by parameter *4415 OUTLET CTRL DLY* expires.	*NOT SEL*
	NOT SEL	No digital input selected.	0
	DI1	Pump/fan outlet pressure monitored through digital input DI1	1
	DI2	See selection *DI1*.	2
	DI3	See selection *DI1*.	3
	DI4	See selection *DI1*.	4
	DI5	See selection *DI1*.	5
4415	OUTLET CTRL DLY	Sets the delay after which the action defined by parameter *4409 OUTLET PROT CTRL* is taken on detection of high outlet pressure.	60.0 s
	0.1…1800.0 s	Delay time	1 = 0.1 s
4416	OUTLET FORCED REF	This reference is used after detection of high outlet pressure. See parameter *4409 OUTLET PROT CTRL*. ⚠ **WARNING!** Make sure that it is safe to continue operation using this reference.	0.0%
	0.0…100.0%	Forced reference	1 = 0.1%
4417	PID OUT DEC TIME	PI controller ramp-down time. See selections *PROTECT* for parameter *4401 INLET PROT CTRL* and *PROTECT* for parameter *4409 OUTLET PROT CTRL*.	60.0 s
	0.0…3800.0 s	Delay time	1 = 0.1 s
4418	APPL PROFILE CTL	Parameters *4418 APPL PROFILE CTL* to *4420 PROF LIMIT ON DLY* provide the Application profile protection feature, based on long-term monitoring of an internal status signal. If the selected signal exceeds (and remains above) the supervision limit for a longer time than the set delay (parameter *4420 PROF LIMIT ON DLY*), the internal status signal “PROFILE HIGH” is set to 1. The signal can be directed to a relay output (see parameter group *14 RELAY OUTPUTS*).	*NOT SEL*
	NOT SEL	Not selected	0
	CONTROL DEV1	Signal *0126 PID 1 OUTPUT* is monitored and compared to parameter *4419 PROFILE OUTP LIM*. Monitoring the deviation between the reference and the actual value gives an indication of the general condition of the pump, piping and valves.	1
	CONTROL DEV2	Signal *0127 PID 2 OUTPUT* is monitored and compared to parameter *4419 PROFILE OUTP LIM*. Monitoring the deviation between the reference and the actual value gives an indication of the general condition of the pump, piping and valves.	2
	APPL OUTPUT	Signal *0116 APPL BLK OUTPUT* is monitored and compared to parameter *4419 PROFILE OUTP LIM*. The signal constantly remaining at 100% may indicate a leak in the output piping.	3
4419	PROFILE OUTP LIM	Supervision limit for the Application profile protection	100.0%

All parameters			
No.	**Name/Value**	**Description**	**Def/FbEq**
	-500.0…500.0%	Supervision limit	1 = 0.1%
4420	PROF LIMIT ON DLY	Delay time for the Application profile protection	0.00 h
	0.00…100.00 h	Delay time	1 = 0.01 h
4421	PIPEFILL ENABLE	Enables the Precharge function, which calculates reference steps.	*NOT SEL*
	NOT SEL	Not enabled	0
	DI1	When DI1 is active (1), Precharge is active when the drive is started. If DI1 becomes inactive (0) before Precharge is finished, normal PID control is enabled.	1
	DI2	See selection *DI1*.	2
	DI3	See selection *DI1*.	3
	DI4	See selection *DI1*.	4
	DI5	See selection *DI1*.	5
	ACTIVE	Precharge is active at every start-up.	7
	DI1(INV)	When DI1 is inactive (0), Precharge is active when the drive is started. If DI1 becomes active (1) before Precharge is finished, normal PID control is enabled.	-1
	DI2(INV)	See selection *DI1(INV)*.	-2
	DI3(INV)	See selection *DI1(INV)*.	-3
	DI4(INV)	See selection *DI1(INV)*.	-4
	DI5(INV)	See selection *DI1(INV)*.	-5
4422	PIPEFILL STEP	Defines the speed step used in Precharge. The PID reference ramp time is specified by parameter *4032 PID REF ACC TIME*. The speed step is added to the reference after the time defined by parameter *4424 ACT CHANGE DELAY* has elapsed and the change in feedback defined by parameter *4423 REQ ACT CHANGE* has not been reached.	0.0%
	0.0…100.0%	Speed step in percent of the maximum speed output	1 = 0.1%
4423	REQ ACT CHANGE	Defines the requested change in process feedback during the time that is set by parameter *4424 ACT CHANGE DELAY*. If the requested change in the feedback is not reached, *4422 PIPEFILL STEP* is added to the speed reference.	0.0%
	0.0…100.0%	Value in percent of the maximum speed	1 = 0.1%
4424	ACT CHANGE DELAY	Defines the time that is waited after the feedback value is compared with the old feedback value. If parameter *4423 REQ ACT CHANGE* is measured in the feedback value, the speed reference stays as it is. If *REQ ACT CHANGE* is not seen in the feedback value, the value of parameter *4422 PIPEFILL STEP* is added to the speed reference.	0.0 s
	0.1…6000.0 s	Delay time	1 = 0.1 s
4425	PID ENABLE DEV	Defines the level when Precharge is disabled and PID is enabled. When the level is reached, PID is enabled. PID is executed as parameterized. If reference ramp times are set, they are used.	0.1%

All parameters			
No.	**Name/Value**	**Description**	**Def/FbEq**
	0.0…100.0%	Value in percent of the maximum feedback.	1 = 0.1%
4426	PIPEFILL TIMEOUT	Defines the maximum time Precharge is allowed to operate. If this time elapses, PID is preset and PID is allowed to run as it is parameterized – with or without reference ramps.	*0 = NOT SEL*
	0 = NOT SEL 1…60000 s	0: NOT SEL 1…60000 s: Max. Precharge operating time	1 = 1 s
45 ENERGY SAVING		Set-up of calculation and optimization of energy savings. **Note:** The values of saved energy parameters *0174 SAVED KWH*, *0175 SAVED MWH*, *0176 SAVED AMOUNT 1*, *0177 SAVED AMOUNT 2* and *0178 SAVED CO2* are derived from subtracting the drive's energy consumed from the direct-on-line (DOL) consumption calculated on the basis of parameter *4508 PUMP POWER*. As such, the accuracy of the values is dependent on the accuracy of the power estimate entered in that parameter.	
4501	ENERGY OPTIMIZER	Enables or disables the energy optimizer, which optimizes the flux so that the total energy consumption and motor noise level are reduced when the drive operates below the nominal load. The total efficiency (motor and drive) can be improved by 1…10% depending on load torque and speed.	*OFF*
	OFF	Disabled	0
	ON	Enabled	1
4502	ENERGY PRICE	Price of energy per kWh. Used for reference when energy savings are calculated. See parameters *0174 SAVED KWH*, *0175 SAVED MWH*, *0176 SAVED AMOUNT 1*, *0177 SAVED AMOUNT 2* and *0178 SAVED CO2* (reduction in carbon dioxide emissions in tn).	0.00 (Currency)
	0.00…655.35	Price of energy per kWh	1 = 0.01 (Currency)
4507	CO2 CONV FACTOR	Conversion factor for converting energy into CO2 emissions (kg/kWh or tn/MWh). Used for multiplying the saved energy in MWh to calculate the value of parameter *0178 SAVED CO2* (reduction in carbon dioxide emissions in tn).	0.5 tn/MWh
	0.0…10.0 tn/MWh	Conversion factor	1 = 0.1 tn/MWh
4508	PUMP POWER	Pump power when connected directly to supply (DOL). Used for reference when energy savings are calculated. See parameters *0174 SAVED KWH*, *0175 SAVED MWH*, *0176 SAVED AMOUNT 1*, *0177 SAVED AMOUNT 2* and *0178 SAVED CO2*. It is possible to use this parameter as the reference power also for other applications than pumps. The reference power can also be some other constant power than a motor connected directly on-line.	100.0%
	0.0…1000.0%	Pump power in percent of nominal motor power	1 = 0.1%
4509	ENERGY RESET	Resets energy calculators *0174 SAVED KWH*, *0175 SAVED MWH*, *0176 SAVED AMOUNT 1*, *0177 SAVED AMOUNT 2* and *0178 SAVED CO2*.	*DONE*
	DONE	Reset not requested (normal operation).	0
	RESET	Reset energy counters, The value reverts automatically to *DONE*.	1

All parameters			
No.	**Name/Value**	**Description**	**Def/FbEq**
46 PUMP CLEANING		Set-up of pump cleaning.	
4601	PUMP CLEAN TRIG	Defines how the Pump cleaning function is triggered. The pump cleaning sequence consists of forward and reverse “steps”. 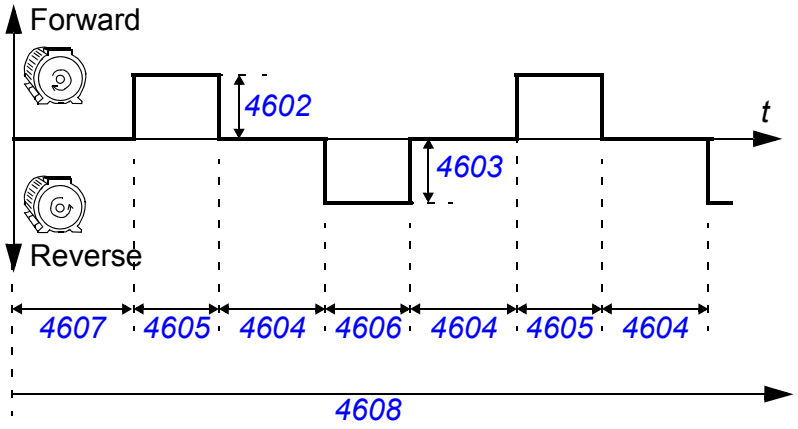 **WARNING!** Before enabling the Pump cleaning function, ensure it is safe to perform the pump cleaning sequence with the connected equipment. **Notes:** The Pump cleaning function overrides parameter *1003 DIRECTION*. The Pump cleaning function observes the maximum forward and reverse frequencies (parameters *2007 MINIMUM FREQ* and *2008 MAXIMUM FREQ*). The Pump cleaning function always uses acceleration time 2 (parameter *2205*) and deceleration time 2 (parameter *2206*). The drive must be started and its Run enable signal must be present before the pump cleaning sequence can start.	*NOT SEL*
	NOT SEL	No triggering source defined.	0
	DI1	Trigger on the rising edge of digital input DI1	1
	DI2	See selection *DI1*.	2
	DI3	See selection *DI1*.	3
	DI4	See selection *DI1*.	4
	DI5	See selection *DI1*.	5
	DI1/SUP1OVR	Enable on the rising edge of digital input DI1, trigger on *SUPRV1 OVER* (parameter *1401 RELAY OUTPUT 1*). See parameter group *32 SUPERVISION*.	7
	DI2/SUP1OVR	See selection *DI1/SUP1OVR*.	8
	DI3/SUP1OVR	See selection *DI1/SUP1OVR*.	9
	DI4/SUP1OVR	See selection *DI1/SUP1OVR*.	10
	DI5/SUP1OVR	See selection *DI1/SUP1OVR*.	11
	SUPRV1 OVER	Trigger on *SUPRV1 OVER* (parameter *1401 RELAY OUTPUT 1*). See parameter group *32 SUPERVISION*.	12
	DRIVE START	Trigger when the drive receives a start command	13

All parameters			
No.	**Name/Value**	**Description**	**Def/FbEq**
	TIMER TRIG	Pump cleaning sequence is started periodically at intervals defined by parameter *4607 TRIG TIME*.	14
	DI1(INV)	Trigger on the falling edge of digital input DI1	-1
	DI2(INV)	See selection *DI1(INV)*.	-2
	DI3(INV)	See selection *DI1(INV)*.	-3
	DI4(INV)	See selection *DI1(INV)*.	-4
	DI5(INV)	See selection *DI1(INV)*.	-5
	DI1(INV)S1O	Enable on the falling edge of digital input DI1, trigger on *SUPRV1 OVER* (parameter *1401 RELAY OUTPUT 1*). See parameter group *32 SUPERVISION*.	-7
	DI2(INV)S1O	See selection *DI1(INV)S1O*.	-8
	DI3(INV)S1O	See selection *DI1(INV)S1O*.	-9
	DI4(INV)S1O	See selection *DI1(INV)S1O*.	-10
	DI5(INV)S1O	See selection *DI1(INV)S1O*.	-11
4602	FWD STEP	Defines the forward step frequency for the pump cleaning sequence in percent of the nominal motor frequency (parameter *9907 MOTOR NOM FREQ*).	0.0%
	0.0…100.0%	Forward step frequency	1 = 0.1%
4603	REV STEP	Defines the reverse step frequency for the pump cleaning sequence in percent of the nominal motor frequency (parameter *9907 MOTOR NOM FREQ*).	0.0%
	0.0…100.0%	Reverse step frequency	1 = 0.1%
4604	OFF TIME	Defines the length of the interval between forward and reverse steps in the pump cleaning sequence in seconds.	0.0 s
	0.0…1000.0 s	Off time (step interval)	1 = 0.1 s
4605	FWD TIME	Defines the duration of each forward step in the pump cleaning sequence in seconds.	0.0 s
	0.0…1000.0 s	Forward step duration	1 = 0.1 s
4606	REV TIME	Defines the duration of each reverse step in the pump cleaning sequence in seconds.	0.0 s
	0.0…1000.0 s	Reverse step duration	1 = 0.1 s
4607	TRIG TIME	Defines the time for setting *TIMER TRIG* of parameter *4601 PUMP CLEAN TRIG*.	0.0 h
	0.0…200.0 h	Trigger time in hours	1 = 0.1 h
4608	COUNT	Number of steps to be performed in the pump cleaning sequence.	0
	0…100	Number of steps	1 = 1
52 PANEL COMM		Communication settings for the control panel port on the drive	
5201	STATION ID	Defines the address of the drive. Two units with the same address are not allowed on-line.	1
	1…247	Address	1 = 1

All parameters			
No.	**Name/Value**	**Description**	**Def/FbEq**
5202	BAUD RATE	Defines the transfer rate of the link.	9.6 kbit/s
	9.6 kbit/s	9.6 kbit/s	1 = 0.1 kbit/s
	19.2 kbit/s	19.2 kbit/s	
	38.4 kbit/s	38.4 kbit/s	
	57.6 kbit/s	57.6 kbit/s	
	115.2 kbit/s	115.2 kbit/s	
5203	PARITY	Defines the use of parity and stop bit(s). The same setting must be used in all on-line stations.	*8 NONE 1*
	8 NONE 1	8 data bits, no parity bit, one stop bit	0
	8 NONE 2	8 data bits, no parity bit, two stop bits	1
	8 EVEN 1	8 data bits, even parity indication bit, one stop bit	2
	8 ODD 1	8 data bits, odd parity indication bit, one stop bit	3
5204	OK MESSAGES	Number of valid messages received by the drive. During normal operation, this number increases constantly.	0
	0…65535	Number of messages	1 = 1
5205	PARITY ERRORS	Number of characters with a parity error received from the Modbus link. If the number is high, check that the parity settings of the devices connected on the bus are the same. **Note:** High electromagnetic noise levels generate errors.	0
	0…65535	Number of characters	1 = 1
5206	FRAME ERRORS	Number of characters with a framing error received by the Modbus link. If the number is high, check that the communication speed settings of the devices connected on the bus are the same. **Note:** High electromagnetic noise levels generate errors.	0
	0…65535	Number of characters	1 = 1
5207	BUFFER OVERRUNS	Number of characters which overflow the buffer, ie number of characters which exceed the maximum message length, 128 bytes.	0
	0…65535	Number of characters	1 = 1
5208	CRC ERRORS	Number of messages with a CRC (cyclic redundancy check) error received by the drive. If the number is high, check CRC calculation for possible errors. **Note:** High electromagnetic noise levels generate errors.	0
	0…65535	Number of messages	1 = 1
53 EFB PROTOCOL		Embedded fieldbus link settings. See chapter *Fieldbus control with the embedded fieldbus* on page *277*.	
5301	EFB PROTOCOL ID	Contains the identification and program revision of the protocol. **Note:** You can reset this parameter only with parameter *9802 COMM PROT SEL*.	
	0000…FFFF hex	Format XXYY hex, where XX = protocol ID and YY = program revision of the protocol.	
5302	EFB STATION ID	Defines the address of the device. Two units with the same address are not allowed on-line.	1
	0…65535	Address	1 = 1

All parameters			
No.	**Name/Value**	**Description**	**Def/FbEq**
5303	EFB BAUD RATE	Defines the transfer rate of the link.	9.6 kbit/s
	1.2 kbit/s	1.2 kbit/s	1 = 0.1 kbit/s
	2.4 kbit/s	2.4 kbit/s	
	4.8 kbit/s	4.8 kbit/s	
	9.6 kbit/s	9.6 kbit/s	
	19.2 kbit/s	19.2 kbit/s	
	38.4 kbit/s	38.4 kbit/s	
	57.6 kbit/s	57.6 kbit/s	
	76.8 kbit/s	76.8 kbit/s	
5304	EFB PARITY	Defines the use of parity and stop bit(s) and the data length. The same setting must be used in all on-line stations.	*8 NONE 1*
	8 NONE 1	No parity bit, one stop bit, 8 data bits	0
	8 NONE 2	No parity bit, two stop bits, 8 data bits	1
	8 EVEN 1	Even parity indication bit, one stop bit, 8 data bits	2
	8 ODD 1	Odd parity indication bit, one stop bit, 8 data bits	3
5305	EFB CTRL PROFILE	Selects the communication profile. See section *Communication profiles* on page *291*.	*ABB DRV LIM*
	ABB DRV LIM	ABB drives limited profile	0
	DCU PROFILE	DCU profile	1
	ABB DRV FULL	ABB drives profile	2
5306	EFB OK MESSAGES	Number of valid messages received by the drive. During normal operation, this number increases constantly.	0
	0…65535	Number of messages	1 = 1
5307	EFB CRC ERRORS	Number of messages with an CRC (cyclic redundancy check) error received by the drive. If the number is high, check CRC calculation for possible errors. **Note:** High electromagnetic noise levels generate errors.	0
	0…65535	Number of messages	1 = 1
5308	EFB UART ERRORS	Number of messages with a character error received by the drive	0
	0…65535	Number of messages	1 = 1
5309	EFB STATUS	Status of the EFB protocol	*IDLE*
	IDLE	EFB protocol is configured, but not receiving any messages.	0
	EXECUT INIT	EFB protocol is initializing.	1
	TIME OUT	A time out has occurred in the communication between the network master and the EFB protocol.	2
	CONFIG ERROR	EFB protocol has a configuration error.	3
	OFF-LINE	EFB protocol is receiving messages that are NOT addressed to this drive.	4
	ON-LINE	EFB protocol is receiving messages that are addressed to this drive.	5

All parameters			
No.	**Name/Value**	**Description**	**Def/FbEq**
	RESET	EFB protocol is performing a hardware reset.	6
	LISTEN ONLY	EFB protocol is in listen-only mode.	7
5310	EFB PAR 10	Selects an actual value to be mapped to Modbus register 40005.	0
	0…65535	Parameter index	1 = 1
5311	EFB PAR 11	Selects an actual value to be mapped to Modbus register 40006.	0
	0…65535	Parameter index	1 = 1
5312	EFB PAR 12	Selects an actual value to be mapped to Modbus register 40007.	0
	0…65535	Parameter index	1 = 1
5313	EFB PAR 13	Selects an actual value to be mapped to Modbus register 40008.	0
	0…65535	Parameter index	1 = 1
5314	EFB PAR 14	Selects an actual value to be mapped to Modbus register 40009.	0
	0…65535	Parameter index	1 = 1
5315	EFB PAR 15	Selects an actual value to be mapped to Modbus register 40010.	0
	0…65535	Parameter index	1 = 1
5316	EFB PAR 16	Selects an actual value to be mapped to Modbus register 40011.	0
	0…65535	Parameter index	1 = 1
5317	EFB PAR 17	Selects an actual value to be mapped to Modbus register 40012.	0
	0…65535	Parameter index	1 = 1
5318	EFB PAR 18	For Modbus: Sets an additional delay before the drive begins transmitting response to the master request.	0
	0…65535	Delay in milliseconds	1 = 1
5319	EFB PAR 19	ABB drives profile (*ABB DRV LIM* or *ABB DRV FULL*) Control word. Read only copy of the Fieldbus Control word.	0000 hex
	0000…FFFF hex	Control word	
5320	EFB PAR 20	ABB drives profile (*ABB DRV LIM* or *ABB DRV FULL*) Status word. Read only copy of the Fieldbus Status word.	0000 hex
	0000…FFFF hex	Status word	
64 LOAD ANALYZER		Load analyzing function for peak value and amplitude. See section *Load analyzer* on page *150*.	
6401	PVL SIGNAL	Defines the signal logged for peak value	103
	x…x	Parameter index in group *01 OPERATING DATA*. Eg 102 = *0102 SPEED*.	1 = 1
6402	PVL FILTER TIME	Defines the filter time for peak value logging	0.1 s
	0.0…120.0 s	Filter time	1 = 0.1 s

All parameters			
No.	**Name/Value**	**Description**	**Def/FbEq**
6403	LOGGERS RESET	Defines the source for the reset of the peak value logger and amplitude logger 2. Resetting always resets both loggers.	*NOT SEL*
	NOT SEL	No reset selected	0
	DI1	Reset loggers on the rising edge of DI1.	1
	DI2	See selection *DI1*.	2
	DI3	See selection *DI1*.	3
	DI4	See selection *DI1*.	4
	DI5	See selection *DI1*.	5
	RESET	Reset loggers. Parameter is set to NOT SEL.	7
	DI1(INV)	Reset loggers on the falling edge of DI1.	-1
	DI2(INV)	See selection *DI1(INV)*.	-2
	DI3(INV)	See selection *DI1(INV)*.	-3
	DI4(INV)	See selection *DI1(INV)*.	-4
	DI5(INV)	See selection *DI1(INV)*.	-5
6404	AL2 SIGNAL	Defines the signal logged for amplitude logger 2	103
	x…x	Parameter index in group *01 OPERATING DATA*. Eg 102 = *0102 SPEED*.	1 = 1
6405	AL2 SIGNAL BASE	Defines the base value from which the percentage distribution is calculated. Representation and default value depends on the signal selected with parameter *6404 AL2 SIGNAL*.	-
	-	-	-
6406	PEAK VALUE	Detected peak value of the signal selected with parameter *6401 PVL SIGNAL*	-
	-	-	-
6407	PEAK TIME 1	Date of the peak value detection	-
	0…65535 d	Day on which the peak value was detected. Format: Date if the real time clock is operating. / The number of days elapsed after the power-on if the real time clock is not used, or was not set.	1 = 1 d
6408	PEAK TIME 2	Time of the peak value detection	-
	00:00:00…23:59:58	hours:minutes:seconds	1 = 2 s
6409	CURRENT AT PEAK	Current at the moment of the peak value	-
	0.0…6553.5 A		1 = 0.1 A
6410	UDC AT PEAK	DC voltage at the moment of the peak value	-
	0…65535 V		1 = 1 V
6411	FREQ AT PEAK	Output frequency at the moment of the peak value	-
	0.0…6553.5 Hz		1 = 0.1 Hz
6412	TIME OF RESET 1	Last reset date of the peak logger and amplitude logger 2	-

All parameters			
No.	**Name/Value**	**Description**	**Def/FbEq**
	0…65535 d	Day of the last reset. Format: Date if the real time clock is operating. / The number of days elapsed after the power-on if the real time clock is not used, or was not set.	1 = 1 d
6413	TIME OF RESET 2	Last reset time of the peak logger and amplitude logger 2	-
	00:00:00… 23:59:58	hours:minutes:seconds	1 = 2 s
6414	AL1RANGE0TO10	Amplitude logger 1 (current in percent of nominal current I_{2N}) 0…10% distribution	-
	0.0…100.0%		1 = 0.1%
6415	AL1RANGE10TO20	Amplitude logger 1 (current in percent of nominal current I_{2N}) 10…20% distribution	-
	0.0…100.0%		1 = 0.1%
6416	AL1RANGE20TO30	Amplitude logger 1 (current in percent of nominal current I_{2N}) 20…30% distribution	-
	0.0…100.0%		1 = 0.1%
6417	AL1RANGE30TO40	Amplitude logger 1 (current in percent of nominal current I_{2N}) 30…40% distribution	-
	0.0…100.0%		1 = 0.1%
6418	AL1RANGE40TO50	Amplitude logger 1 (current in percent of nominal current I_{2N}) 40…50% distribution	-
	0.0…100.0%		1 = 0.1%
6419	AL1RANGE50TO60	Amplitude logger 1 (current in percent of nominal current I_{2N}) 50…60% distribution	-
	0.0…100.0%		1 = 0.1%
6420	AL1RANGE60TO70	Amplitude logger 1 (current in percent of nominal current I_{2N}) 60…70% distribution	-
	0.0…100.0%		1 = 0.1%
6421	AL1RANGE70TO80	Amplitude logger 1 (current in percent of nominal current I_{2N}) 70…80% distribution	-
	0.0…100.0%		1 = 0.1%
6422	AL1RANGE80TO90	Amplitude logger 1 (current in percent of nominal current I_{2N}) 80…90% distribution	-
	0.0…100.0%		1 = 0.1%
6423	AL1RANGE90TO	Amplitude logger 1 (current in percent of nominal current I_{2N}) over 90% distribution	-
	0.0…100.0%		1 = 0.1%
6424	AL2RANGE0TO10	Amplitude logger 2 (selection with parameter *6404*) 0…10% distribution	-
	0.0…100.0%		1 = 0.1%
6425	AL2RANGE10TO20	Amplitude logger 2 (selection with parameter *6404*) 10…20% distribution	-
	0.0…100.0%		1 = 0.1%
6426	AL2RANGE20TO30	Amplitude logger 2 (selection with parameter *6404*) 20…30% distribution	-

All parameters			
No.	**Name/Value**	**Description**	**Def/FbEq**
	0.0…100.0%		1 = 0.1%
6427	AL2RANGE30 TO40	Amplitude logger 2 (selection with parameter *6404*) 30…40% distribution	-
	0.0…100.0%		1 = 0.1%
6428	AL2RANGE40 TO50	Amplitude logger 2 (selection with parameter *6404*) 40…50% distribution	-
	0.0…100.0%		1 = 0.1%
6429	AL2RANGE50 TO60	Amplitude logger 2 (selection with parameter *6404*) 50…60% distribution	-
	0.0…100.0%		1 = 0.1%
6430	AL2RANGE60 TO70	Amplitude logger 2 (selection with parameter *6404*) 60…70% distribution	-
	0.0…100.0%		1 = 0.1%
6431	AL2RANGE70 TO80	Amplitude logger 2 (selection with parameter *6404*) 70…80% distribution	-
	0.0…100.0%		1 = 0.1%
6432	AL2RANGE80 TO90	Amplitude logger 2 (selection with parameter *6404*) 80…90% distribution	-
	0.0…100.0%		1 = 0.1%
6433	AL2RANGE90 TO	Amplitude logger 2 (selection with parameter *6404*) over 90% distribution	-
	0.0…100.0%		1 = 0.1%
81 PFC CONTROL		Set-up of Pump-Fan Control (PFC) mode. See section *PFC and SPFC control* on page *152*.	
8103	REFERENCE STEP 1	Sets a percentage value that is added to the process reference. Applies only when at least one auxiliary (constant speed) motor is running. **Example:** The drive operates three parallel pumps that maintain water pressure in a pipe. Parameter *4011 INTERNAL SETPNT* sets a constant pressure reference that controls the pressure in the pipe. The speed regulated pump operates alone at low water consumption levels. As water consumption increases, first one constant speed pump operates, then, the second. As flow increases, the pressure at the output end of the pipe drops relative to the pressure measured at the input end. As auxiliary motors step in to increase the flow, the adjustments below correct the reference to more closely match the output pressure. When the first auxiliary pump operates, increase the reference with parameter *8103 REFERENCE STEP 1*. When two auxiliary pumps operate, increase the reference with parameter *8103 REFERENCE STEP 1* + parameter *8104 REFERENCE STEP 2*. When three auxiliary pumps operate, increase the reference with parameter *8103 REFERENCE STEP 1* + parameter *8104 REFERENCE STEP 2* + parameter *8105 REFERENCE STEP 3*.	0.0%
	0.0…100.0%	Value in percent	1 = 0.1%

All parameters			
No.	**Name/Value**	**Description**	**Def/FbEq**
8104	REFERENCE STEP 2	Sets a percentage value that is added to the process reference. Applies only when at least two auxiliary (constant speed) motors are running. See parameter *8103 REFERENCE STEP 1*.	0.0%
	0.0…100.0%	Value in percent	1 = 0.1%
8105	REFERENCE STEP 3	Sets a percentage value that is added to the process reference. Applies only when at least three auxiliary (constant speed) motors are running. See parameter *8103 REFERENCE STEP 1*.	0.0%
	0.0…100.0%	Value in percent	1 = 0.1%
8109	START FREQ 1	Sets the frequency limit used to start the first auxiliary motor. The first auxiliary motor starts if: • no auxiliary motors are running • drive output frequency exceeds limit *8109* + 1 Hz • output frequency stays above a relaxed limit (*8109* - 1 Hz) for at least time *8115 AUX MOT START D*. After the first auxiliary motor starts, output frequency decreases by value (*8109 START FREQ 1*) - (*8112 LOW FREQ 1*). In effect, the output of the speed regulated motor drops to compensate for the input from the auxiliary motor. See the figure, where: A = (*8109 START FREQ 1*) - (*8112 LOW FREQ 1*) B = Output frequency increase during the start delay. C = Diagram showing auxiliary motor's run status as frequency increases (1 = On). **Note:** *8109 START FREQ 1* value must be between *8112 LOW FREQ 1* and (*2008 MAXIMUM FREQ*) -1. 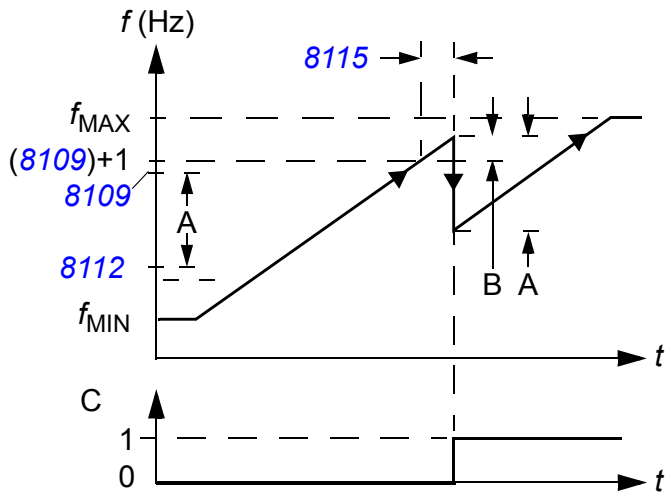 	E: 50.0 Hz U: 60.0 Hz
	0.0…500.0 Hz	Frequency	1 = 0.1 Hz

All parameters			
No.	**Name/Value**	**Description**	**Def/FbEq**
8110	START FREQ 2	Sets the frequency limit used to start the second auxiliary motor. See *8109 START FREQ 1* for a complete description of the operation. The second auxiliary motor starts if: • one auxiliary motor is running • drive output frequency exceeds limit *8110* + 1 Hz • output frequency stays above the relaxed limit (*8110* - 1 Hz) for at least time *8115 AUX MOT START D*.	E: 50.0 Hz U: 60.0 Hz
	0.0…500.0 Hz	Frequency	1 = 0.1 Hz
8111	START FREQ 3	Sets the frequency limit used to start the third auxiliary motor. See *8109 START FREQ 1* for a complete description of the operation. The third auxiliary motor starts if: • two auxiliary motors are running • drive output frequency exceeds limit *8111* + 1 Hz • output frequency stays above the relaxed limit (*8111* - 1 Hz) for at least time *8115 AUX MOT START D*.	E: 50.0 Hz U: 60.0 Hz
	0.0…500.0 Hz	Frequency	1 = 0.1 Hz
8112	LOW FREQ 1	Sets the frequency limit used to stop the first auxiliary motor. The first auxiliary motor stops if: • only one (the first) auxiliary motor is running • drive output frequency drops below limit *8112* - 1 Hz. • output frequency stays below the relaxed limit (*8112* + 1 Hz) for at least time: *8116 AUX MOT STOP D*. After the first auxiliary motor stops, output frequency increases by value (*8109 START FREQ 1*) - (*8112 LOW FREQ 1*). In effect, the output of the speed regulated motor increases to compensate for the loss of the auxiliary motor.	E: 25.0 Hz U: 30.0 Hz

All parameters			
No.	**Name/Value**	**Description**	**Def/FbEq**
		See the figure, where: A = (*8109 START FREQ 1*) - (*8112 LOW FREQ 1*) B = Output frequency decrease during the stop delay. C = Diagram showing auxiliary motor's run status as frequency decreases (1 = On). Grey path = Shows hysteresis – if time is reversed, the path backwards is not the same. For details on the path for starting, see the diagram at *8109 START FREQ 1*. **Note:** *8112 LOW FREQ 1* value must be between (*2007 MINIMUM FREQ*) + 1 Hz and *8109 START FREQ 1* 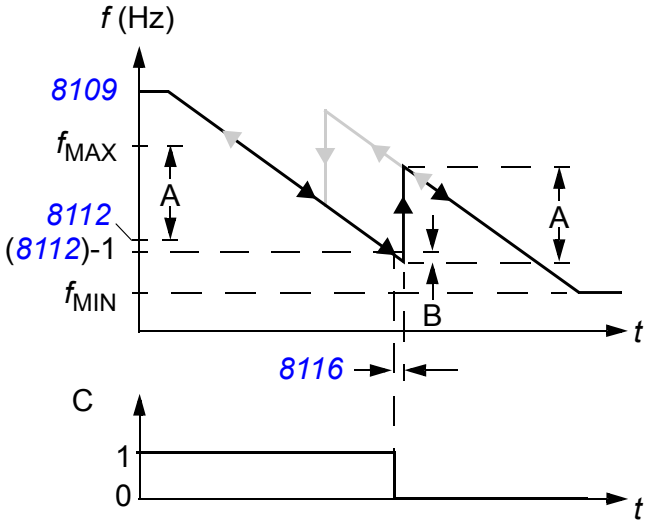 	
	0.0…500.0 Hz	Frequency	1 = 0.1 Hz
8113	LOW FREQ 2	Sets the frequency limit used to stop the second auxiliary motor. See *8112 LOW FREQ 1* for a complete description of the operation. The second auxiliary motor stops if: • two auxiliary motors are running • drive output frequency drops below limit *8113* - 1 Hz • output frequency stays below the relaxed limit (*8113* + 1 Hz) for at least time *8116 AUX MOT STOP D*.	E: 25.0 Hz U: 30.0 Hz
	0.0…500.0 Hz	Frequency	1 = 0.1 Hz
8114	LOW FREQ 3	Sets the frequency limit used to stop the third auxiliary motor. See *8112 LOW FREQ 1* for a complete description of the operation. The third auxiliary motor stops if: • three auxiliary motors are running • drive output frequency drops below limit *8114* - 1 Hz • output frequency stays below the relaxed limit (*8114* + 1 Hz) for at least time *8116 AUX MOT STOP D*.	E: 25.0 Hz U: 30.0 Hz
	0.0…500.0 Hz	Frequency	1 = 0.1 Hz
8115	AUX MOT START D	Sets the start delay for the auxiliary motors. The output frequency must remain above the start frequency limit (parameter *8109*, *8110* or *8111*) for this time period before the auxiliary motor starts. See *8109 START FREQ 1* for a complete description of the operation.	5.0 s

All parameters			
No.	**Name/Value**	**Description**	**Def/FbEq**
	0.0…3600.0 s	Delay time	1 = 0.1 s
8116	AUX MOT STOP D	Sets the stop delay for the auxiliary motors. The output frequency must remain below the low frequency limit (parameter *8112*, *8113* or *8114*) for this time period before the auxiliary motor stops. See *8112 LOW FREQ 1* for a complete description of the operation.	3.0 s
	0.0…3600.0 s	Delay time	1 = 0.1 s
8117	NR OF AUX MOT	Sets the number of auxiliary motors. Each auxiliary motor requires a relay output, which the drive uses to send start/stop signals. The Autochange function, if used, requires an additional relay output for the speed regulated motor. The following describes the set-up of the required relay outputs. **Relay outputs** As noted above, each auxiliary motor requires a relay output, which the drive uses to send start/stop signals. The following describes how the drive keeps track of motors and relays. The drive provides one relay output RO 1. An external relay output module can be added to provide relay outputs RO 2 … RO 4. **Note:** If five auxiliary motors are needed (Autochange disabled), use transistor output TO (parameter *1805 DO SIGNAL*) in addition to relay outputs RO 1 … RO 4. In relay order (= auxiliary motor order), TO is set between RO 1 and RO 2 (see page *262*). Transistor output must be set to digital mode, ie parameter *1804 TO MODE* is set to 0 (*DIGITAL*). Note that maximum voltage at TO is 30 V DC. Parameters *1401*…*1403* and *1410* define, respectively, how relays RO 1 … RO 4 are used – the parameter value 31 (*PFC*) defines the relay as used for PFC. The drive assigns auxiliary motors to relays in ascending order. If the Autochange function is disabled, the first auxiliary motor is the one connected to the first relay with a parameter setting = 31 (*PFC*), and so on. If the Autochange function is used, the assignments rotate. Initially, the speed regulated motor is the one connected to the first relay with a parameter setting = 31 (*PFC*), the first auxiliary motor is the one connected to the second relay with a parameter setting = 31 (*PFC*), and so on. The fourth auxiliary motor uses the same reference step, low frequency and start frequency values as the third auxiliary motor.	1
	0…4 (5 with TO)	Number of auxiliary motors	1 = 1

All parameters			
No.	**Name/Value**	**Description**	**Def/FbEq**
		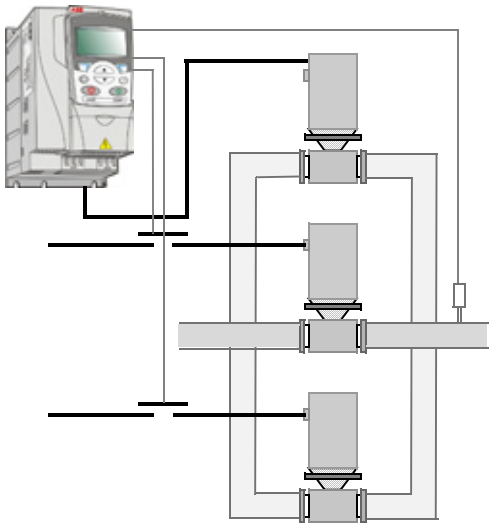 Standard PFC mode 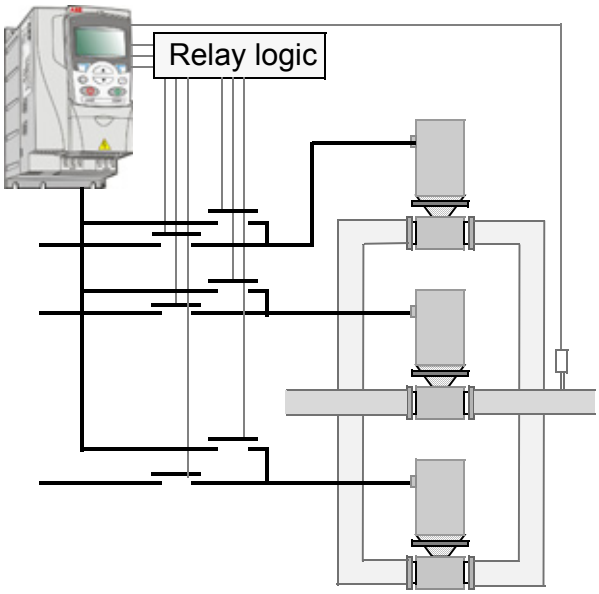 PFC with Autochange mode	

All parameters			
No.	**Name/Value**	**Description**	**Def/FbEq**

The table below shows the PFC motor assignments for some typical settings in the relay output parameters (*1401*…*1403* and *1410*), where the settings are either = 31 (*PFC*), or = X (anything but 31), and where the Autochange function is disabled (*8118 AUTOCHNG INTERV* = 0).

Parameter setting					Relay assignment			
					Autochange disabled			
1401	**1402**	**1403**	**1410**	**8117**	**RO 1**	**RO 2**	**RO 3**	**RO 4**
31	X	X	X	1	Aux.	X	X	X
31	31	X	X	2	Aux.	Aux.	X	X
31	31	31	X	3	Aux.	Aux.	Aux.	X
X	31	31	X	2	X	Aux.	Aux.	X
31	31	X	X	1*	Aux.	Aux.	X	X

* = One additional relay output for the PFC that is in use. One motor is in “sleep” when the other is rotating.

If five auxiliary motors are needed, use the transistor output (parameter *1805 DO SIGNAL*) as an additional relay output. In relay order, TO is set between RO 1 and RO 2. The table below shows the PFC motor assignments for some typical settings when TO is in use.

Parameter setting						Relay assignment				
						Autochange disabled				
1401	**1805**	**1402**	**1403**	**1410**	**8117**	**RO 1**	**TO**	**RO 2**	**RO 3**	**RO 4**
31	X	X	X	X	1	Aux.	X	X	X	X
31	31	X	X	X	2	Aux.	Aux.	X.	X	X
31	31	31	X	X	3	Aux.	Aux.	Aux.	X	X
31	31	31	31	X	4	Aux.	Aux.	Aux.	Aux.	X
31	31	31	31	31	5	Aux.	Aux.	Aux.	Aux.	Aux.
31	31	31	31	X	4*	Aux.	Aux.	Aux.	Aux.	X

* = One additional relay output for the PFC that is in use. One motor is in “sleep” when the other is rotating.

The table below shows the PFC motor assignments for some typical settings in the relay output parameters (*1401*…*1403* and *1410*), where the settings are either = 31 (*PFC*), or = X (anything but 31), and where the Autochange function is enabled (*8118 AUTOCHNG INTERV* > 0).

Parameter setting					Relay assignment			
					Autochange enabled			
1401	**1402**	**1403**	**1410**	**8117**	**RO 1**	**RO 2**	**RO 3**	**RO 4**
31	31	X	X	1	PFC	PFC	X	X
31	31	31	X	2	PFC	PFC	PFC	X
X	31	31	X	1	X	PFC	PFC	X
31	31	X	X	0**	PFC	PFC	X	X

** = No auxiliary motors, but the Autochange function is in use. Working as a standard PID-control.

All parameters			
No.	**Name/Value**	**Description**	**Def/FbEq**
8118	AUTOCHNG INTERV	Controls operation of the Autochange function and sets the interval between changes. The Autochange time interval only applies to the time when the speed regulated motor is running. See parameter *8119 AUTOCHNG LEVEL* for an overview of the Autochange function. The drive always coasts to stop when Autochange is performed. Autochange enabled requires parameter *8120 INTERLOCKS* > 0. ⚠ **WARNING!** When enabled, the Autochange function requires the interlocks (*8120 INTERLOCKS* > 0) enabled. During Autochange the power output is interrupted and the drive coasts to stop, preventing damage to the contacts. 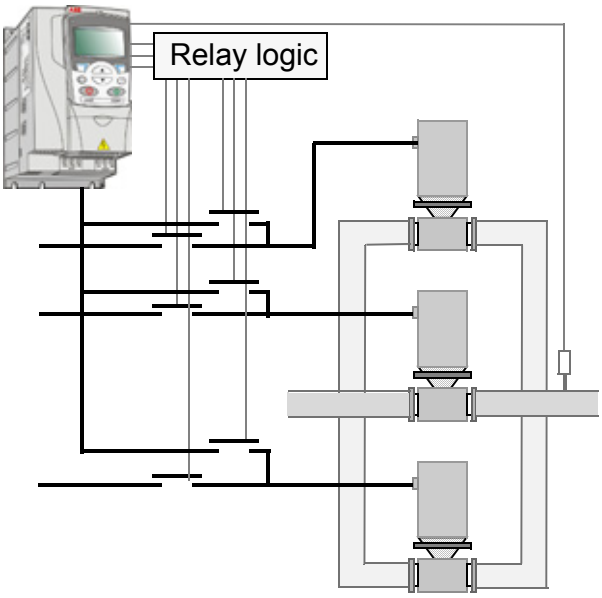 PFC with Autochange mode	*0.0 = NOT SEL*
	-0.1 = TEST MODE 0.0 = NOT SEL 0.1…336.0 h	-0.1: Test mode. Forces the interval to value 36…48 s. 0.0: Disables the Autochange function. 0.1…336 h: The operating time interval (the time when the start signal is on) between automatic motor changes.	1 = 0.1 h

All parameters			
No.	**Name/Value**	**Description**	**Def/FbEq**
8119	AUTOCHNG LEVEL	Sets an upper limit, as a percent of output capacity, for the Autochange logic. When the output from the PID/PFC control block exceeds this limit, Autochange is prevented. For example, use this parameter to deny Autochange when the pump-fan system is operating near maximum capacity. **Autochange overview** The purpose of the Autochange operation is to equalize duty time between multiple motors used in a system. At each Autochange operation, a different motor takes a turn connected to the drive output – the speed regulated motor. The starting order of the other motors rotates. The Autochange function requires: • external switch gear for changing the drive's output power connections • parameter *8120 INTERLOCKS* > 0. Autochange is performed when: • the running time since the previous Autochange reaches the time set by *8118 AUTOCHNG INTERV* • the PFC input is below the level set by this parameter, *8119 AUTOCHNG LEVEL*. **Note:** The drive always coasts to stop when Autochange is performed. In an Autochange, the Autochange function does all of the following (see the figure): • Initiates a change when the running time, since the last Autochange, reaches *8118 AUTOCHNG INTERV*, and PFC input is below limit *8119 AUTOCHNG LEVEL*. • Stops the speed regulated motor. • Switches off the contactor of the speed regulated motor. • Increments the starting order counter, to change the starting order for the motors. • Identifies the next motor in line to be the speed regulated motor. • Switches off the above motor's contactor, if the motor was running. Any other running motors are not interrupted. • Switches on the contactor of the new speed regulated motor. The Autochange switch gear connects this motor to the drive power output. • Delays motor start for time *8122 PFC START DELAY*. • Starts the speed regulated motor. • Identifies the next constant speed motor in the rotation. • Switches the above motor on, but only if the new speed regulated motor had been running (as a constant speed motor) – This step keeps an equal number of motors running before and after Autochange. • Continues with normal PFC operation.	50.0%

All parameters			
No.	**Name/Value**	**Description**	**Def/FbEq**
		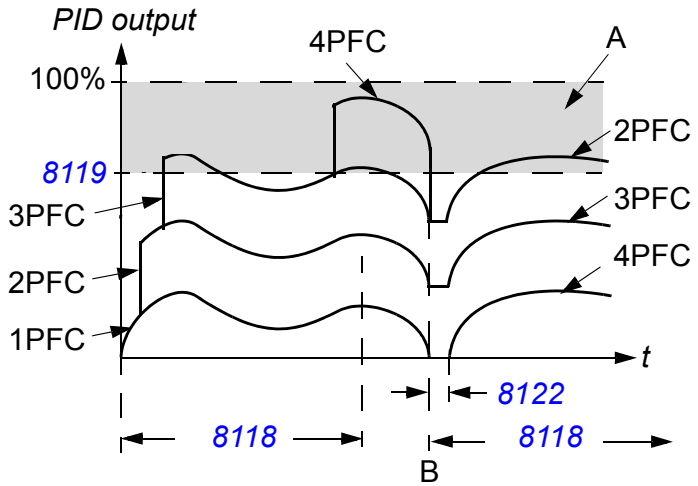 A = Area above *8119 AUTOCHNG LEVEL* – Autochange not allowed B = Autochange occurs 1PFC, etc. = PID output associated with each motor. **Starting order counter** The operation of the starting-order counter: • The relay output parameter definitions (*1401*…*1403* and *1410*) establish the initial motor sequence. (The lowest parameter number with a value 31 (*PFC*) identifies the relay connected to 1PFC, the first motor, and so on.) • Initially, 1PFC = speed regulated motor, 2PFC = 1st auxiliary motor, etc. • The first Autochange shifts the sequence to: 2PFC = speed regulated motor, 3PFC = 1st auxiliary motor, …, 1PFC = last auxiliary motor. • The next Autochange shifts the sequence again, and so on. • If the Autochange cannot start a needed motor because all inactive motors are interlocked, the drive displays an alarm (*2015 PFC I LOCK*). • When the drive power supply is switched off, the counter preserves the current Autochange rotation positions in permanent memory. When power is restored, the Autochange rotation starts at the position stored in memory. • If the PFC relay configuration is changed (or if the PFC enable value is changed), the rotation is reset according to parameters *1401*…*1403* and *1410*.	

All parameters			
No.	**Name/Value**	**Description**	**Def/FbEq**
		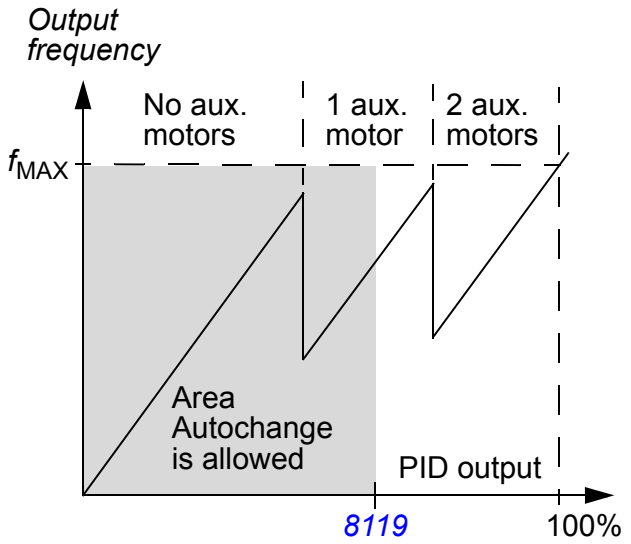	
	0.0…100.0%	Value in percent	1 = 0.1%
8120	INTERLOCKS	Defines operation of the Interlock function. When the Interlock function is enabled: • an interlock is active when its command signal is absent • an interlock is inactive when its command signal is present. • the drive does not start if a start command occurs when the speed regulated motor's interlock is active – the control panel displays an alarm (*2015 PFC I LOCK*). Wire each Interlock circuit as follows: • Wire a contact of the motor's On/Off switch to the Interlock circuit – the drive's PFC logic can then recognize that the motor is switched off and start the next available motor. • Wire a contact of the motor thermal relay (or other protective device in the motor circuit) to the Interlock input – the drive's PFC logic can then recognize that a motor fault is activated and stop the motor.	*DI3*
	NOT SEL	Disables the Interlock function. All digital inputs are available for other purposes. Requires *8118 AUTOCHNG INTERV* = 0.0 (The Autochange function must be disabled if Interlock function is disabled.)	0

All parameters			
No.	**Name/Value**	**Description**	**Def/FbEq**
	DI1	Enables the Interlock function and assigns a digital input (starting with DI1) to the interlock signal for each PFC relay. These assignments are defined in the following table and depend on: • the number of PFC relays (number of parameters *1401*…*1403* and *1410* with value = 31 [*PFC*]) • the Autochange function status (disabled if *8118 AUTOCHNG INTERV* = 0.0, and otherwise enabled).	1

No. of PFC relays	Autochange disabled (Parameter *8118*)	Autochange enabled (Parameter *8118*)
0	DI1: Speed reg motor DI2…DI5: Free	Not allowed
1	DI1: Speed reg motor DI2: First PFC relay DI3…DI5: Free	DI1: First PFC relay DI2…DI5: Free
2	DI1: Speed reg motor DI2: First PFC relay DI3: Second PFC relay DI4…DI5: Free	DI1: First PFC relay DI2: Second PFC relay DI3…DI5: Free
3	DI1: Speed reg motor DI2: First PFC relay DI3: Second PFC relay DI4: Third PFC relay DI5…DI5: Free	DI1: First PFC relay DI2: Second PFC relay DI3: Third PFC relay DI4…DI5: Free
4	DI1: Speed reg motor DI2: First PFC relay DI3: Second PFC relay DI4: Third PFC relay DI5: Fourth PFC relay	DI1: First PFC relay DI2: Second PFC relay DI3: Third PFC relay DI4: Fourth PFC relay DI5: Free
5	Not allowed	DI1: First PFC relay DI2: Second PFC relay DI3: Third PFC relay DI4: Fourth PFC relay DI5: Fifth PFC relay

All parameters			
No.	**Name/Value**	**Description**	**Def/FbEq**
	DI2	Enables the Interlock function and assigns a digital input (starting with DI2) to the interlock signal for each PFC relay. These assignments are defined in the following table and depend on: • the number of PFC relays (number of parameters *1401*…*1403* and *1410* with value = 31 [*PFC*]) • the Autochange function status (disabled if *8118 AUTOCHNG INTERV* = 0.0, and otherwise enabled).	2

No. of PFC relays	Autochange disabled (Parameter *8118*)	Autochange enabled (Parameter *8118*)
0	DI1: Free DI2: Speed reg motor DI3…DI5: Free	Not allowed
1	DI1: Free DI2: Speed reg motor DI3: First PFC relay DI4…DI5: Free	DI1: Free DI2: First PFC relay DI3…DI5: Free
2	DI1: Free DI2: Speed reg motor DI3: First PFC relay DI4: Second PFC relay DI5…DI5: Free	DI1: Free DI2: First PFC relay DI3: Second PFC relay DI4…DI5: Free
3	DI1: Free DI2: Speed reg motor DI3: First PFC relay DI4: Second PFC relay DI5: Third PFC relay	DI1: Free DI2: First PFC relay DI3: Second PFC relay DI4: Third PFC relay DI5: Free
4	Not allowed	DI1: Free DI2: First PFC relay DI3: Second PFC relay DI4: Third PFC relay DI5: Fourth PFC relay
5	Not allowed	Not allowed

All parameters			
No.	**Name/Value**	**Description**	**Def/FbEq**
	DI3	Enables the Interlocks function and assigns a digital input (starting with DI3) to the interlock signal for each PFC relay. These assignments are defined in the following table and depend on: • the number of PFC relays (number of parameters *1401*…*1403* and *1410* with value = 31 [*PFC*]) • the Autochange function status (disabled if *8118 AUTOCHNG INTERV* = 0.0, and otherwise enabled). **No. of PFC relays** / **Autochange disabled (Parameter *8118*)** / **Autochange enabled (Parameter *8118*)** 0 / DI1…DI2: Free DI3: Speed reg motor DI4…DI5: Free / Not allowed 1 / DI1…DI2: Free DI3: Speed reg motor DI4: First PFC relay DI5…DI5: Free / DI1…DI2: Free DI3: First PFC relay DI4…DI5: Free 2 / DI1…DI2: Free DI3: Speed reg motor DI4: First PFC relay DI5: Second PFC relay / DI1…DI2: Free DI3: First PFC relay DI4: Second PFC relay DI5: Free 3 / Not allowed / DI1…DI2: Free DI3: First PFC relay DI4: Second PFC relay DI5: Third PFC relay 4…5 / Not allowed / Not allowed	3
	DI4	Enables the Interlock function and assigns a digital input (starting with DI4) to the interlock signal for each PFC relay. These assignments are defined in the following table and depend on: • the number of PFC relays (number of parameters *1401*…*1403* and *1410* with value = 31 [*PFC*]) • the Autochange function status (disabled if *8118 AUTOCHNG INTERV* = 0.0, and otherwise enabled). **No. of PFC relays** / **Autochange disabled (Parameter *8118*)** / **Autochange enabled (Parameter *8118*)** 0 / DI1…DI3: Free DI4: Speed reg motor DI5: Free / Not allowed 1 / DI1…DI3: Free DI4: Speed reg motor DI5: First PFC relay / DI1…DI3: Free DI4: First PFC relay DI5: Free 2 / Not allowed / DI1…DI3: Free DI4: First PFC relay DI5: Second PFC relay 3…5 / Not allowed / Not allowed	4

<table>
<tr><th colspan="4">All parameters</th></tr>
<tr><th>No.</th><th>Name/Value</th><th>Description</th><th>Def/FbEq</th></tr>
<tr><td></td><td>DI5</td><td>Enables the Interlock function and assigns a digital input (starting with DI5) to the interlock signal for each PFC relay. These assignments are defined in the following table and depend on:
• the number of PFC relays (number of parameters 1401…1403 and 1410 with value = 31 [PFC])
• the Autochange function status (disabled if 8118 AUTOCHNG INTERV = 0.0, and otherwise enabled).
<table>
<tr><th>No. PFC relays</th><th>Autochange disabled (Parameter 8118)</th><th>Autochange enabled (Parameter 8118)</th></tr>
<tr><td>0</td><td>DI1…DI4: Free
DI5: Speed reg motor</td><td>Not allowed</td></tr>
<tr><td>1</td><td>Not allowed</td><td>DI1…DI4: Free
DI5: First PFC relay</td></tr>
<tr><td>2…5</td><td>Not allowed</td><td>Not allowed</td></tr>
</table></td><td>5</td></tr>
<tr><td>8121</td><td>REG BYPASS CTRL</td><td>Selects Regulator by-pass control. When enabled, Regulator by-pass control provides a simple control mechanism without a PID regulator.
Use Regulator by-pass control only in special applications.
 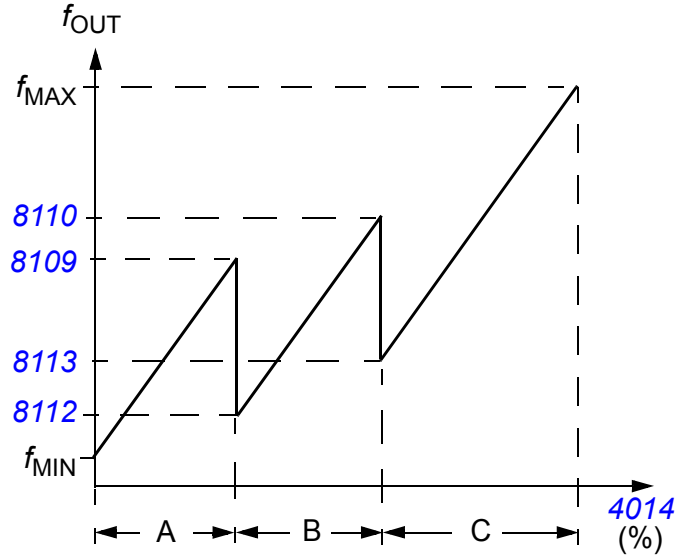

A = No auxiliary motors running
B = One auxiliary motor running
C = Two auxiliary motors running</td><td>NO</td></tr>
</table>

All parameters			
No.	**Name/Value**	**Description**	**Def/FbEq**
		Example: In the diagram below, the pumping station's outlet flow is controlled by the measured inlet flow (A). 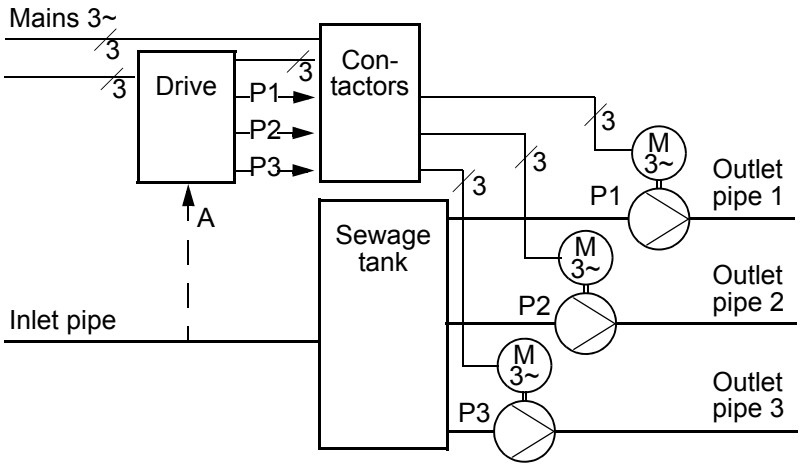 	
	NO	Disables Regulator by-pass control. The drive uses the normal PFC reference *1106 REF2 SELECT*.	0
	YES	Enables Regulator by-pass control. The process PID regulator is bypassed. Actual value of PID is used as the PFC reference (input). (Normally *1106 REF2 SELECT* is used as the PFC reference.) The drive uses the feedback signal defined by *4014 FBK SEL* (or *4114*) for the PFC frequency reference. The first figure for parameter *8121* shows the relation between the control signal *4014 FBK SEL* (or *4114*) and the speed regulated motor's frequency in a three-motor system.	1
8122	PFC START DELAY	Sets the start delay for speed regulated motors in the system. Using the delay, the drive works as follows: • Switches on the contactor of the speed regulated motor, connecting the motor to the drive power output. • Delays motor start for time *8122 PFC START DELAY*. • Starts the speed regulated motor. • Starts auxiliary motors. See parameter *8115 AUX MOT START D* for delay. ⚠ **WARNING!** Motors equipped with star-delta starters require a PFC start delay. After the drive relay output switches a motor on, the star-delta starter must switch to the star-connection and then back to the delta-connection before the drive applies power. So, the PFC start delay must be longer than the time setting of the star-delta starter.	0.50 s
	0.01…10.00 s	Delay time	1 = 0.01 s

All parameters			
No.	**Name/Value**	**Description**	**Def/FbEq**
8123	PFC ENABLE	Selects PFC control or SPFC control. When enabled, PFC control or SPFC control does the following: • Switches in, or out, auxiliary constant speed motors as output demand increases or decreases. Parameters *8109 START FREQ 1* to *8114 LOW FREQ 3* define the switch points in terms of the drive output frequency. • Adjusts the speed regulated motor output down, as auxiliary motors are added, and adjusts the speed regulated motor output up, as auxiliary motors are taken off line. • Provides Interlock functions, if enabled.	*NOT SEL*
	NOT SEL	Disabled	0
	ACTIVE	PFC control enabled	1
	SPFC ACTIVE	SPFC control enabled. Soft pump and fan control is used for alternation applications where lower pressure peaks are desirable when a new auxiliary motor is started.	2
8124	ACC IN AUX STOP	Sets the PFC acceleration time for a zero-to-maximum frequency ramp. This PFC acceleration ramp: • applies to the speed regulated motor when an auxiliary motor is switched off • replaces the acceleration ramp defined in group *22 ACCEL/DECEL* • applies only until the output of the regulated motor increases by an amount equal to the output of the switched off auxiliary motor. Then the acceleration ramp defined in group *22 ACCEL/DECEL* applies. 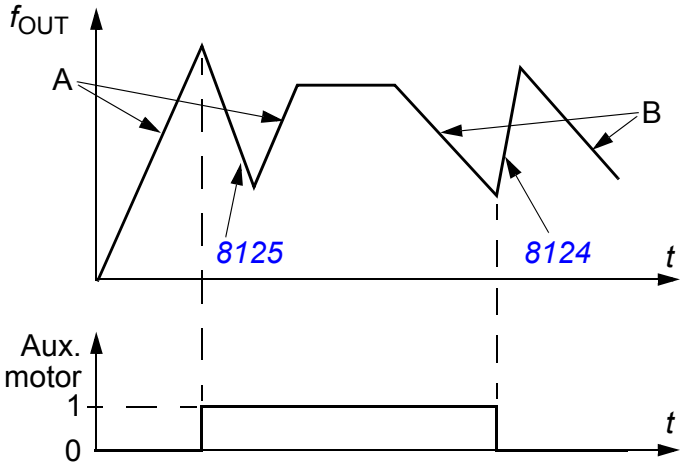 A = speed regulated motor accelerating using group *22 ACCEL/DECEL* parameters (*2202* or *2205*). B = speed regulated motor decelerating using group *22 ACCEL/DECEL* parameters (*2203* or *2206*). At aux. motor start, speed regulated motor decelerates using *8125 DEC IN AUX START*. At aux. motor stop, speed regulated motor accelerates using *8124 ACC IN AUX STOP*.	*0.0 = NOT SEL*
	0.0 = NOT SEL 0.1…1800.0 s	0.0: Not selected 0.1…1800 s: Activates this function using the value entered as the acceleration time.	1 = 0.1 s

All parameters			
No.	**Name/Value**	**Description**	**Def/FbEq**
8125	DEC IN AUX START	Sets the PFC deceleration time for a maximum-to-zero frequency ramp. This PFC deceleration ramp: • applies to the speed regulated motor when an auxiliary motor is switched on. • replaces the deceleration ramp defined in group *22 ACCEL/DECEL* • applies only until the output of the regulated motor decreases by an amount equal to the output of the auxiliary motor. Then the deceleration ramp defined in group *22 ACCEL/DECEL* applies. See the figure for parameter *8124 ACC IN AUX STOP*.	*0.0 = NOT SEL*
	0.0 = NOT SEL 0.1…1800.0 s	0.0: Not selected 0.1…1800 s: Activates this function using the value entered as the deceleration time.	1 = 0.1 s
8126	TIMED AUTOCHNG	Sets the Autochange using a timed function. See parameter *8119 AUTOCHNG LEVEL*.	*NOT SEL*
	NOT SEL	Not selected	0
	TIMED FUNC 1	Enables Autochange when timed function 1 is active.	1
	TIMED FUNC 2	See selection *TIMED FUNC 1*.	2
	TIMED FUNC 3	See selection *TIMED FUNC 1*.	3
	TIMED FUNC 4	See selection *TIMED FUNC 1*.	4
8127	MOTORS	Sets the actual number of PFC controlled motors (maximum 7 motors: 1 speed regulated, 3 connected direct-on-line and 3 spare motors). This value includes also the speed regulated motor. This value must be compatible with the number of relays allocated to PFC if the Autochange function is used. If Autochange function is not used, the speed regulated motor does not need to have a relay output allocated to PFC but it needs to be included in this value.	2
	1…7	Number of PFC motors	1 = 1
8128	AUX START ORDER	Sets the start order of the auxiliary motors.	*EVEN RUNTIME*
	EVEN RUNTIME	Time sharing is active. Evens out the cumulative run time of the auxiliary motors. The start order depends on the run times: The auxiliary motor whose cumulative run time is shortest is started first, then the motor whose cumulative run time is the second shortest etc. When the demand drops, the first motor to be stopped is the one whose cumulative run time is longest.	1
	RELAY ORDER	The start order is fixed to be the order of the relays.	2
98 OPTIONS		External serial communication activation	
9802	COMM PROT SEL	Activates the external serial communication and selects the interface. **Note:** Before activating embedded fieldbus communication, set parameter *1611 PARAMETER VIEW* to LONG VIEW (3).	*NOT SEL*
	NOT SEL	No communication	0

All parameters			
No.	**Name/Value**	**Description**	**Def/FbEq**
	STD MODBUS	Embedded fieldbus, EIA-485 interface (I/O terminals 23…26). See chapter *Fieldbus control with the embedded fieldbus* on page *277*.	1
	MODBUS RS232	Embedded fieldbus. Interface: RS-232 (ie control panel connector). See chapter *Fieldbus control with the embedded fieldbus* on page *277*.	10
99 START-UP DATA		Language selection. Definition of motor set-up data.	
9901	LANGUAGE	Selects the display language used on the Assistant control panel. **Note:** With the ACS-CP-D Assistant control panel, the following languages are available: English (0), Chinese (1), Korean (2) and Japanese (3).	*ENGLISH*
	ENGLISH	British English	0
	ENGLISH (AM)	American English	1
	DEUTSCH	German	2
	ITALIANO	Italian	3
	ESPAÑOL	Spanish	4
	PORTUGUES	Portuguese	5
	NEDERLANDS	Dutch	6
	FRANÇAIS	French	7
	DANSK	Danish	8
	SUOMI	Finnish	9
	SVENSKA	Swedish	10
	RUSSKI	Russian	11
	POLSKI	Polish	12
	TÜRKÇE	Turkish	13
	CZECH	Czech	14
	MAGYAR	Hungarian	15
	ELLINIKA	Greek	16
9902	APPLIC MACRO	Selects the application macro. See chapter *Application macros* on page *101*.	*ABB STANDARD*
	ABB STANDARD	Standard macro for constant speed applications	1
	3-WIRE	3-wire macro for constant speed applications	2
	ALTERNATE	Alternate macro for start forward and start reverse applications	3
	MOTOR POT	Motor potentiometer macro for digital signal speed control applications	4

All parameters			
No.	**Name/Value**	**Description**	**Def/FbEq**
	HAND/AUTO	Hand/Auto macro to be used when two control devices are connected to the drive: • Device 1 communicates through the interface defined by external control location EXT1. • Device 2 communicates through the interface defined by external control location EXT2. EXT1 or EXT2 is active at a time. Switching between EXT1/2 through digital input.	5
	PID CONTROL	PID control. For applications in which the drive controls a process value, eg pressure control by the drive running the pressure boost pump. Measured pressure and the pressure reference are connected to the drive.	6
	PFC CONTROL	PFC (Pump and fan control) macro for pump alternation applications	7
	SPFC CONTROL	SPFC (Soft pump and fan control) macro for pump alternation applications where lower pressure peaks are desirable when a new auxiliary motor is started.	15
	LOAD FD SET	FlashDrop parameter values as defined by the FlashDrop file. Parameter view is selected by parameter *1611 PARAMETER VIEW*. FlashDrop is an optional device for fast copying of parameters to unpowered drives. FlashDrop allows easy customization of the parameter list, eg selected parameters can be hidden. For more information, see *MFDT-01 FlashDrop user's manual* (3AFE68591074 [English]).	31
	USER S1 LOAD	User 1 macro loaded into use. Before loading, check that the saved parameter settings and the motor model are suitable for the application.	0
	USER S1 SAVE	Save User 1 macro. Stores the current parameter settings and the motor model.	-1
	USER S2 LOAD	User 2 macro loaded into use. Before loading, check that the saved parameter settings and the motor model are suitable for the application.	-2
	USER S2 SAVE	Save User 2 macro. Stores the current parameter settings and the motor model.	-3

All parameters			
No.	**Name/Value**	**Description**	**Def/FbEq**
9905	MOTOR NOM VOLT	Defines the nominal motor voltage. Must be equal to the value on the motor rating plate. The drive cannot supply the motor with a voltage greater than the input power voltage. Note that the output voltage is not limited by the nominal motor voltage but increased linearly up to the value of the input voltage. 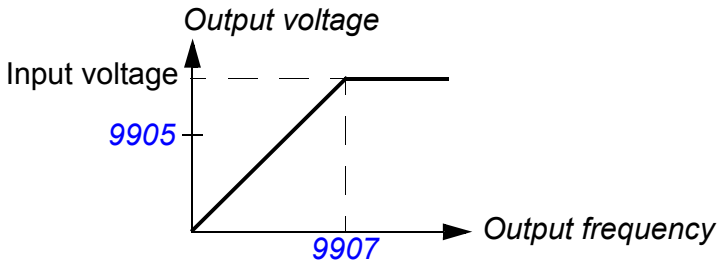 **WARNING!** Never connect a motor to a drive which is connected to power line with voltage level higher than the rated motor voltage.	200 V units: 230 V 400 V E units: 400 V 400 V U units: 460 V
	200 V units: 115…345 V 400 V E units: 200…600 V 400 V U units: 230…690 V	Voltage. **Note:** The stress on the motor insulations is always dependent on the drive supply voltage. This also applies to the case where the motor voltage rating is lower than the rating of the drive and the supply of the drive.	1 = 1 V
9906	MOTOR NOM CURR	Defines the nominal motor current. Must be equal to the value on the motor rating plate.	I_{2N}
	0.2…2.0 · I_{2N}	Current	1 = 0.1 A
9907	MOTOR NOM FREQ	Defines the nominal motor frequency, ie the frequency at which the output voltage equals the nominal motor voltage: Field weakening point = Nom. frequency · Supply voltage / Motor nom. voltage	E: 50.0 Hz U: 60.0 Hz
	10.0…500.0 Hz	Frequency	1 = 0.1 Hz
9908	MOTOR NOM SPEED	Defines the nominal motor speed. Must be equal to the value on the motor rating plate.	Type dependent
	50…18000 rpm	Speed	1 = 1 rpm
9909	MOTOR NOM POWER	Defines the nominal motor power. Must equal the value on the motor rating plate.	P_N
	0.2…3.0 · P_N kW	Power	1 = 0.1 kW / 0.1 hp
9914	PHASE INVERSION	Inverts two phases in the motor cable. This changes the direction of the motor rotation without having to exchange the positions of two motor cable phase conductors at the drive output terminals or at the motor connection box.	*NO*
	NO	Phases not inverted	0
	YES	Phases inverted	1

13

Fieldbus control with the embedded fieldbus

What this chapter contains

The chapter describes how the drive can be controlled by external devices over a communication network using embedded fieldbus.

System overview

The drive is connected to an external control system through embedded fieldbus. The embedded fieldbus supports Modbus RTU protocol. Modbus is a serial, asynchronous protocol. Transaction is half-duplex.

The embedded fieldbus can be connected with either RS-232 (control panel connector X2) or EIA-485 (I/O terminals 23…26). The maximum length of the communication cable with RS-232 is restricted to 3 meters.

RS-232 is designed for a point-to-point application (a single master controlling one slave). EIA-485 is designed for a multipoint application (a single master controlling one or more slaves).

Note: The RS-232 connection is supported from software version 4.02A onwards.

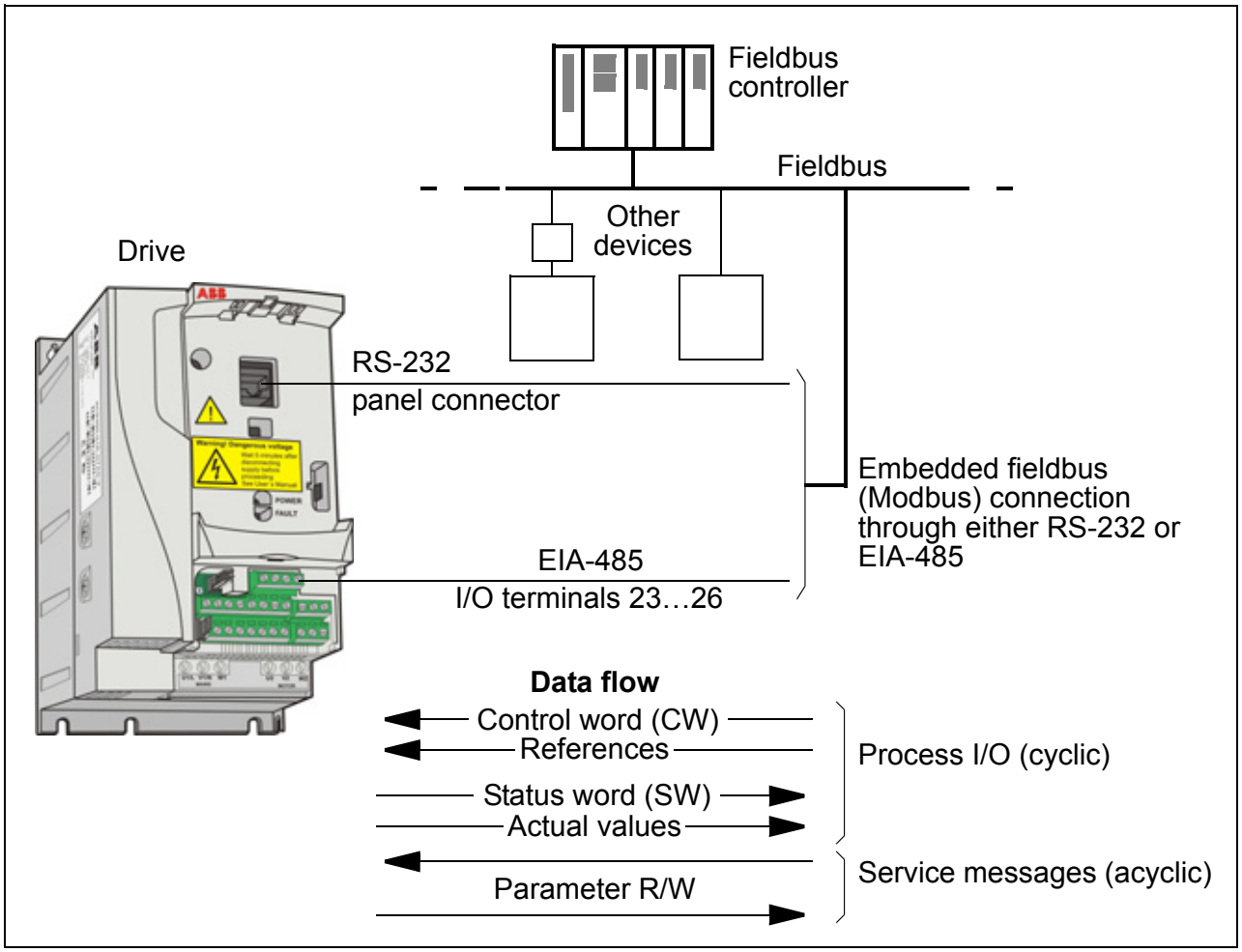

Note: The RS-232 connection is supported from software version 4.02A onwards.

The drive can be set to receive all of its control information through the fieldbus interface, or the control can be distributed between the fieldbus interface and other available sources, eg digital and analog inputs.

Setting up communication through the embedded Modbus

Before configuring the drive for fieldbus control, install the fieldbus according to instructions given in section *Connecting the embedded fieldbus* on page *54*.

The communication through the fieldbus link is initialized by setting parameter *9802 COMM PROT SEL* to *STD MODBUS* or *MODBUS RS232*. The communication parameters in group *53 EFB PROTOCOL* must also be adjusted. See the table below.

Parameter	Alternative settings	Setting for fieldbus control	Function/Information
COMMUNICATION INITIALIZATION			
9802 COMM PROT SEL	*NOT SEL* *STD MODBUS* *MODBUS RS232*	STD MODBUS (with EIA-485) MODBUS RS232 (with RS-232)	Initializes embedded fieldbus communication.
ADAPTER MODULE CONFIGURATION			
1611 PARAMETER VIEW	*FLASHDROP* *SHORT VIEW* *LONG VIEW*	*LONG VIEW*	Selects the long view.
5302 EFB STATION ID	0…65535	Any	Defines the station ID address of the EIA-485/RS-232 link. No two stations on line may have the same address.
5303 EFB BAUD RATE	1.2 kbit/s 2.4 kbit/s 4.8 kbit/s 9.6 kbit/s 19.2 kbit/s 38.4 kbit/s 57.6 kbit/s 76.8 kbit/s		Defines the communication speed of the EIA-485/RS-232 link.
5304 EFB PARITY	*8 NONE 1* *8 NONE 2* *8 EVEN 1* *8 ODD 1*		Selects the parity setting. The same settings must be used in all on-line stations.
5305 EFB CTRL PROFILE	*ABB DRV LIM* *DCU PROFILE* *ABB DRV FULL*	Any	Selects the communication profile used by the drive. See section *Communication profiles* on page *291*.
5310 EFB PAR 10 … *5317 EFB PAR 17*	0…65535	Any	Selects an actual value to be mapped to Modbus register 400xx.

After the configuration parameters in group *53 EFB PROTOCOL* have been set, the *Drive control parameters* on page *281* must be checked and adjusted when necessary.

The new settings take effect when the drive is next powered up, or when parameter *5302 EFB STATION ID* setting is cleared and reset.

Drive control parameters

After the Modbus communication has been set up, the drive control parameters listed in the table below should be checked and adjusted when necessary.

The **Setting for fieldbus control** column gives the value to use when the Modbus interface is the desired source or destination for that particular signal. The **Function/Information** column gives a description of the parameter.

Parameter	**Setting for fieldbus control**	**Function/Information**	**Modbus register address**	
CONTROL COMMAND SOURCE SELECTION			ABB DRV	DCU
1001 EXT1 COMMANDS	*COMM*	Enables *0301 FB CMD WORD 1* bits 0…1 (*START*/*STOP*) when EXT1 is selected as the active control location.		40031 bits 0…1
1002 EXT2 COMMANDS	*COMM*	Enables *0301 FB CMD WORD 1* bits 0…1 (*START*/*STOP*) when EXT2 is selected as the active control location.		40031 bits 0…1
1003 DIRECTION	*FORWARD* *REVERSE* *REQUEST*	Enables rotation direction control as defined by parameters *1001* and *1002*. The direction control is explained in section *Reference handling* on page *287*.		40031 bit 2
1102 EXT1/EXT2 SEL	*COMM*	Enables EXT1/EXT2 selection through *0301 FB CMD WORD 1* bit 5 (with ABB drives profile *5319 EFB PAR 19* bit 11).	40001 bit 11	40031 bit 5
1103 REF1 SELECT	*COMM* *COMM+AI1* *COMM*AI1*	Fieldbus reference REF1 is used when EXT1 is selected as the active control location. See section *Fieldbus references* on page *284* for information on the alternative settings.	40002 for REF1	
1106 REF2 SELECT	*COMM* *COMM+AI1* *COMM*AI1*	Fieldbus reference REF2 is used when EXT2 is selected as the active control location. See section *Fieldbus references* on page *284* for information on the alternative settings.	40003 for REF2	
OUTPUT SIGNAL SOURCE SELECTION			ABB DRV	DCU
1401 RELAY OUTPUT 1	*COMM* *COMM(-1)*	Enables relay output RO control by signal *0134 COMM RO WORD*.	40134 for signal *0134*	
1501 AO1 CONTENT SEL	135	Directs the contents of fieldbus reference *0135 COMM VALUE 1* to analog output AO.	40135 for signal *0135*	
SYSTEM CONTROL INPUTS			ABB DRV	DCU
1601 RUN ENABLE	*COMM*	Enables the control of the inverted Run enable signal (Run disable) through *0301 FB CMD WORD 1* bit 6 (with ABB drives profile *5319 EFB PAR 19* bit 3).	40001 bit 3	40031 bit 6

Parameter	Setting for fieldbus control	Function/Information	Modbus register address	
1604 FAULT RESET SEL	*COMM*	Enables fault reset through fieldbus *0301 FB CMD WORD 1* bit 4 (with ABB drives profile *5319 EFB PAR 19* bit 7).	40001 bit 7	40031 bit 4
1606 LOCAL LOCK	*COMM*	Local control mode lock signal through *0301 FB CMD WORD 1* bit 14	-	40031 bit 14
1607 PARAM SAVE	*DONE SAVE...*	Saves parameter value changes (including those made through fieldbus control) to permanent memory.	41607	
1608 START ENABLE 1	*COMM*	Inverted Start enable 1 (Start disable) through *0302 FB CMD WORD 2* bit 18	-	40032 bit 18
1609 START ENABLE 2	*COMM*	Inverted Start enable 2 (Start disable) through *0302 FB CMD WORD 2* bit 19	-	40032 bit 19
LIMITS			ABB DRV	DCU
2201 ACC/DEC 1/2 SEL	*COMM*	Acceleration/deceleration ramp pair selection through *0301 FB CMD WORD 1* bit 10	-	40031 bit 10
2209 RAMP INPUT 0	*COMM*	Ramp input to zero through *0301 FB CMD WORD 1* bit 13 (with ABB drives profile *5319 EFB PAR 19* bit 6)	40001 bit 6	40031 bit 13
COMMUNICATION FAULT FUNCTIONS			ABB DRV	DCU
3018 COMM FAULT FUNC	*NOT SEL* *FAULT* *CONST SP 7* *LAST SPEED*	Determines drive action in case fieldbus communication is lost.	43018	
3019 COMM FAULT TIME	0.1…60.0 s	Defines the time between communication loss detection and the action selected with parameter *3018 COMM FAULT FUNC*.	43019	
PID CONTROLLER REFERENCE SIGNAL SOURCE SELECTION			ABB DRV	DCU
4010/ 4110/ 4210 SET POINT SEL	*COMM* *COMM+AI1* *COMM*AI1*	PID control reference (REF2)	40003 for REF2	

Fieldbus control interface

The communication between a fieldbus system and the drive consists of 16-bit input and output data words (with ABB drives profile) and 32-bit input and output words (with DCU profile).

Control word and Status word

The Control word (CW) is the principal means of controlling the drive from a fieldbus system. The Control word is sent by the fieldbus controller to the drive. The drive switches between its states according to the bit-coded instructions of the Control word.

The Status word (SW) is a word containing status information, sent by the drive to the fieldbus controller.

References

References (REF) are 16-bit signed integers. A negative reference (eg reverse direction of rotation) is formed by calculating the two’s complement from the corresponding positive reference value. The contents of each reference word can be used as the frequency or process reference.

Actual values

Actual values (ACT) are 16-bit words containing selected values of the drive.

Fieldbus references

Reference selection and correction

Fieldbus reference (called COMM in signal selection contexts) is selected by setting a reference selection parameter – *1103* or *1106* – to *COMM*, *COMM+AI1* or *COMM*AI1*. When *1103 REF1 SELECT* or *1106 REF2 SELECT* is set to *COMM*, the fieldbus reference is forwarded as such without correction. When parameter *1103* or *1106* is set to *COMM+AI1* or *COMM*AI1*, the fieldbus reference is corrected using analog input AI1 as shown in the following examples.

Setting	When COMM ≥ 0	When COMM ≤ 0
COMM+AI1	COMM(%) · (MAX-MIN) + MIN + (AI(%) -50%) · (MAX-MIN)	COMM(%) · (MAX-MIN) - MIN + (AI(%) -50%) · (MAX-MIN)
	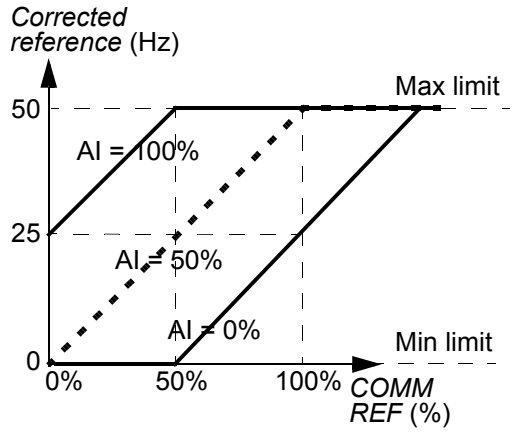	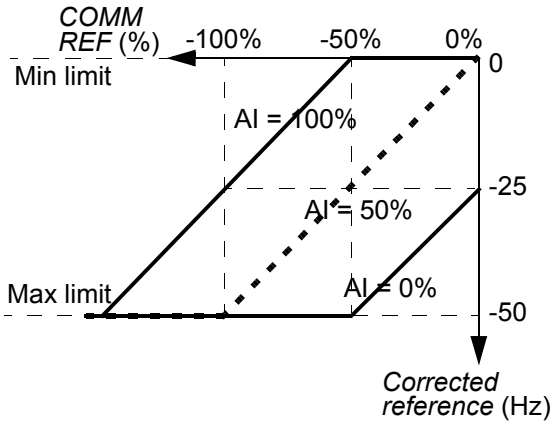
	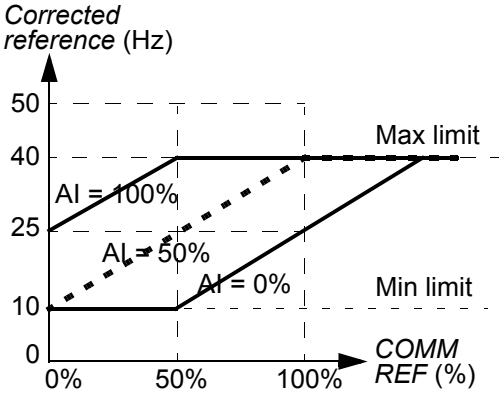	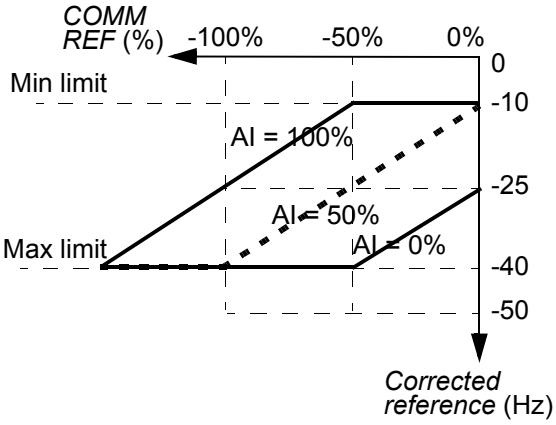
	Maximum limit is defined by parameter *1105 REF1 MAX* / *1108 REF2 MAX*. Minimum limit is defined by parameter *1104 REF1 MIN* / *1107 REF2 MIN*.	

Setting	When COMM ≥ 0	When COMM ≤ 0
*COM M*AI1*	COMM(%) · (AI(%) / 50%) · (MAX-MIN) + MIN	COMM(%) · (AI(%) / 50%) · (MAX-MIN) - MIN
	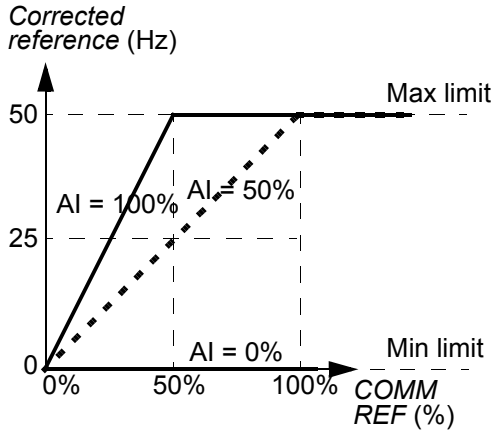	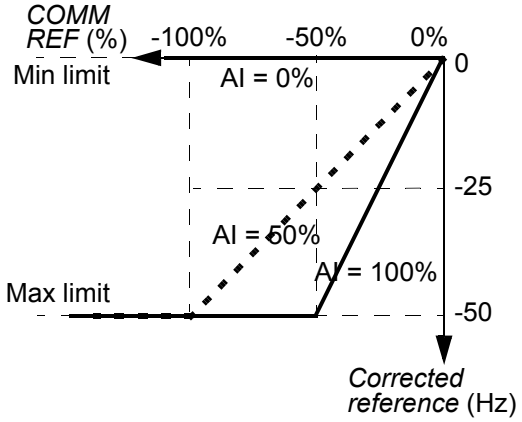
	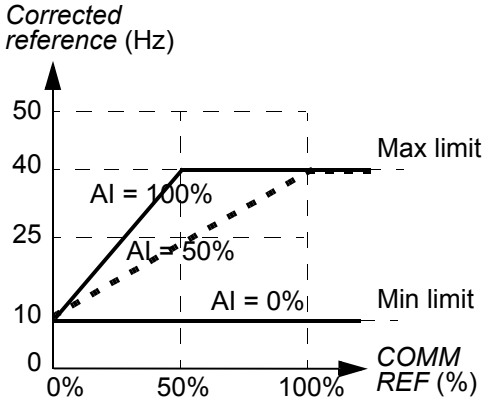	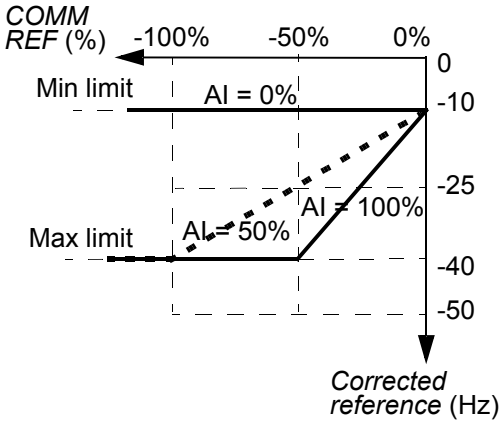
	Maximum limit is defined by parameter *1105 REF1 MAX* / *1108 REF2 MAX*. Minimum limit is defined by parameter *1104 REF1 MIN* / *1107 REF2 MIN*.	

Fieldbus reference scaling

Fieldbus references REF1 and REF2 are scaled as shown in the following table.

Note: Any correction of the reference (see section *Reference selection and correction* on page *286*) is applied before scaling.

Reference	Range	Reference type	Scaling	Remarks
REF1	-32767 … +32767	Frequency	-20000 = -**(par. *1105*)** 0 = 0 +20000 = **(par. *1105*)** (20000 corresponds to 100%)	Final reference limited by *1104*/*1105*. Actual motor speed limited by *2007*/*2008*.
REF2	-32767 … +32767	Frequency	-10000 = -**(par. *1108*)** 0 = 0 +10000 = **(par. *1108*)** (10000 corresponds to 100%)	Final reference limited by *1107*/*1108*. Actual motor speed limited by *2007*/*2008*.
		PID reference	-10000 = -**(par. *1108*)** 0 = 0 +10000 = **(par. *1108*)** (10000 corresponds to 100%)	Final reference limited by *4012*/*4013* (PID set1) or *4112*/*4113* (PID set2).

Note: The settings of parameters *1104 REF1 MIN* and *1107 REF2 MIN* have no effect on the reference scaling.

Reference handling

The control of rotation direction is configured for each control location (EXT1 and EXT2) using the parameters in group *10 START/STOP/DIR*. Fieldbus references are bipolar, ie they can be negative or positive. The following diagrams illustrate how group 10 parameters and the sign of the fieldbus reference interact to produce the reference REF1/REF2.

	Direction determined by the sign of COMM	**Direction determined by digital command, eg digital input, control panel**
Par. *1003 DIRECTION* = *FORWARD*	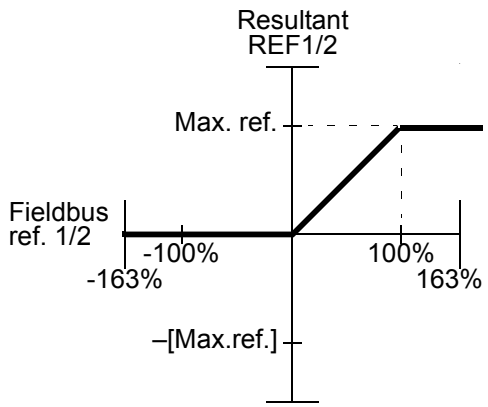	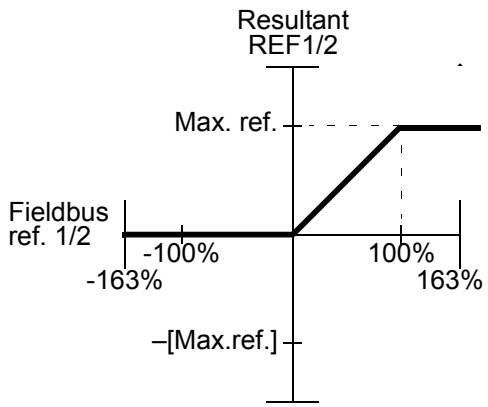
Par. *1003 DIRECTION* = *REVERSE*	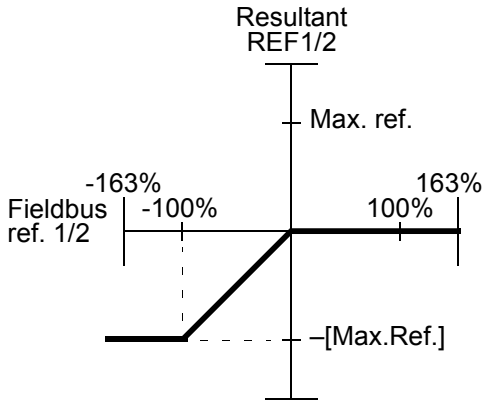	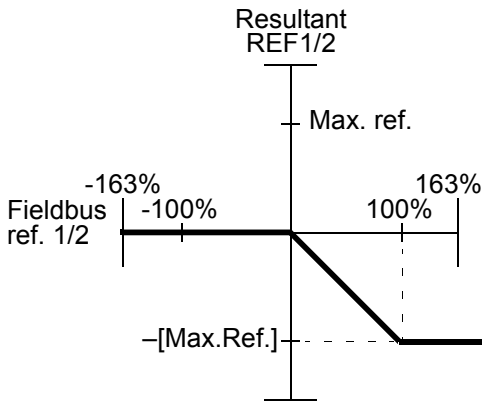
Par. *1003 DIRECTION* = *REQUEST*	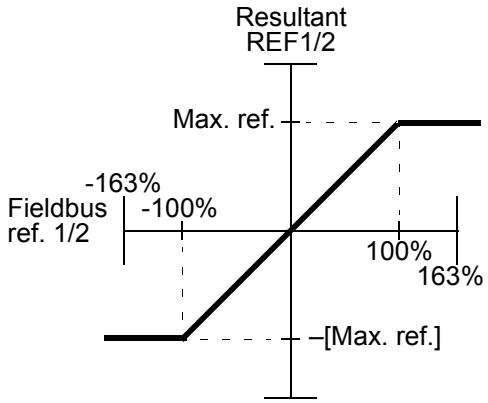	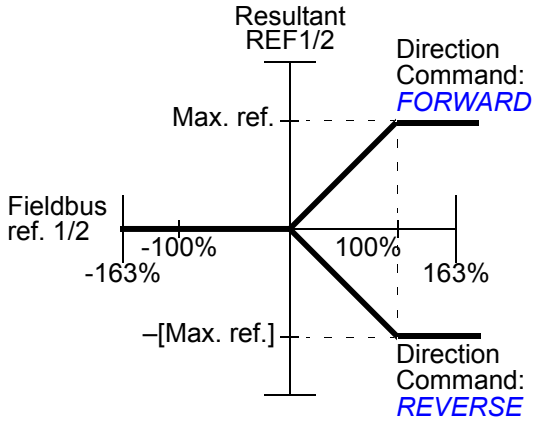

Actual value scaling

The scaling of the integers sent to the master as Actual values depends on the selected function. See chapter *Actual signals and parameters* on page *159*.

Modbus mapping

The following Modbus function codes are supported by the drive.

Function	Code Hex (dec)	Additional information
Read Multiple Holding Registers	03 (03)	Reads the contents of registers in a slave device. Parameter sets, control, status and reference values are mapped as holding registers.
Write Single Holding Register	06 (06)	Writes to a single register in a slave device. Parameter sets, control, status and reference values are mapped as holding registers.
Diagnostics	08 (08)	Provides a series of tests for checking the communication between the master and the slave devices, or for checking various internal error conditions within the slave. The following subcodes are supported: 00 Return Query Data: The data passed in the request data field is to be returned in the response. The entire response message should be identical to the request. 01 Restart Communications Option: The slave device serial line port must be initialized and restarted, and all of its communication event counters cleared. If the port is currently in Listen Only Mode, no response is returned. If the port is not currently in Listen Only Mode, a normal response is returned before the restart. 04 Force Listen Only Mode: Forces the addressed slave device to Listen Only Mode. This isolates it from the other devices on the network, allowing them to continue communicating without interruption from the addressed remote device. No response is returned. The only function that is processed after this mode is entered is the Restart Communications Option function (subcode 01).
Write Multiple Holding Registers	10 (16)	Writes to the registers (1 to approximately 120 registers) in a slave device. Parameter sets, control, status and reference values are mapped as holding registers.
Read/Write Multiple Holding Registers	17 (23)	Performs a combination of one read operation and one write operation (function codes 03 and 10) in a single Modbus transaction. The write operation is performed before the read operation.

Register mapping

The drive parameters, Control/Status word, references and actual values are mapped to the area 4xxxx so that:

- 40001…40099 are reserved for drive control/status, reference and actual values.
- 40101…49999 are reserved for drive parameters *0101*…9999. (Eg 40102 is parameter *0102*). In this mapping, the thousands and hundreds correspond to the group number, while the tens and ones correspond to the parameter number within a group.

The register addresses that do not correspond with drive parameters are invalid. If there is an attempt to read or write invalid addresses, the Modbus interface returns an exception code to the controller. See *Exception codes* on page *290*.

The following table gives information on the contents of the Modbus addresses 40001…40012 and 40031…40034.

Modbus register		Access	Information
40001	Control Word	R/W	Control word. Supported only by ABB drives profile, ie when *5305 EFB CTRL PROFILE* setting is *ABB DRV LIM* or *ABB DRV FULL*. Parameter *5319 EFB PAR 19* shows a copy of the Control word in hexadecimal format.
40002	Reference 1	R/W	External reference REF1. See section *Fieldbus references* on page *284*.
40003	Reference 2	R/W	External reference REF2. See section *Fieldbus references* on page *284*.
40004	Status Word	R	Status word. Supported only by ABB drives profile, ie when *5305 EFB CTRL PROFILE* setting is *ABB DRV LIM* or *ABB DRV FULL*. Parameter *5320 EFB PAR 20* shows a copy of the Control word in hexadecimal format.
40005 … 40012	Actual 1…8	R	Actual value 1…8. Use parameter *5310*… *5317* to select an actual value to be mapped to Modbus register 40005…40012.
40031	Control Word LSW	R/W	*0301 FB CMD WORD 1*, ie the least significant word of the DCU profile 32-bit Control word. Supported only by DCU profile, ie when *5305 EFB CTRL PROFILE* setting is *DCU PROFILE*.
40032	Control Word MSW	R/W	*0302 FB CMD WORD 2*, ie the most significant word of the DCU profile 32-bit Control word. Supported only by DCU profile, ie when *5305 EFB CTRL PROFILE* setting is *DCU PROFILE*.
40033	Status Word LSW	R	*0303 FB STS WORD 1*, ie the least significant word of the DCU profile 32-bit Status word. Supported only by DCU profile, ie when *5305 EFB CTRL PROFILE* setting is *DCU PROFILE*.
40034	ACS310 STATUS WORD MSW	R	*0304 FB STS WORD 2*, ie the most significant word of the DCU profile 32-bit Status word. Supported only by DCU profile, ie when *5305 EFB CTRL PROFILE* setting is *DCU PROFILE*.

Note: Parameter writes through standard Modbus are always volatile, ie modified values are not automatically stored to permanent memory. Use parameter *1607 PARAM SAVE* to save all changed values.

Function codes

Supported function codes for the holding 4xxxx register are:

Code Hex (dec)	Function name	Additional information
03 (03)	Read 4X Register	Reads the binary contents of registers (4X references) in a slave device.
06 (06)	Preset single 4X register	Presets a value into a single register (4X reference). When broadcast, the function presets the same register reference in all attached slaves.
10 (16)	Preset multiple 4X registers	Presets values into a sequence of registers (4X references). When broadcast, the function presets the same register references in all attached slaves.
17 (23)	Read/Write 4X registers	Performs a combination of one read operation and one write operation (function codes 03 and 10) in a single Modbus transaction. Write operation is performed before the read operation.

Note: In the Modbus data message, register 4xxxx is addressed as xxxx -1. For example register 40002 is addressed as 0001.

Exception codes

Exception codes are serial communication responses from the drive. The drive supports the standard Modbus exception codes listed in the following table.

Code	Name	Description
01	Illegal Function	Unsupported command
02	Illegal Data Address	Address does not exist or is read/write protected.
03	Illegal Data Value	Incorrect value for the drive: • Value is outside minimum or maximum limits. • Parameter is read-only. • Message is too long. • Parameter write is not allowed when start is active. • Parameter write is not allowed when factory macro is selected.

Drive parameter *5318 EFB PAR 18* holds the most recent exception code.

Communication profiles

The embedded fieldbus supports three communication profiles:

- DCU communication profile (*DCU PROFILE*)
- ABB drives limited communication profile (*ABB DRV LIM*)
- ABB drives full communication profile (*ABB DRV FULL*).

The DCU profile extends the control and status interface to 32 bits, and it is the internal interface between the main drive application and the embedded fieldbus environment. The ABB drives limited is based on the PROFIBUS interface. ABB drives full profile supports two Control word bits not supported by the (*ABB DRV LIM*) implementation.

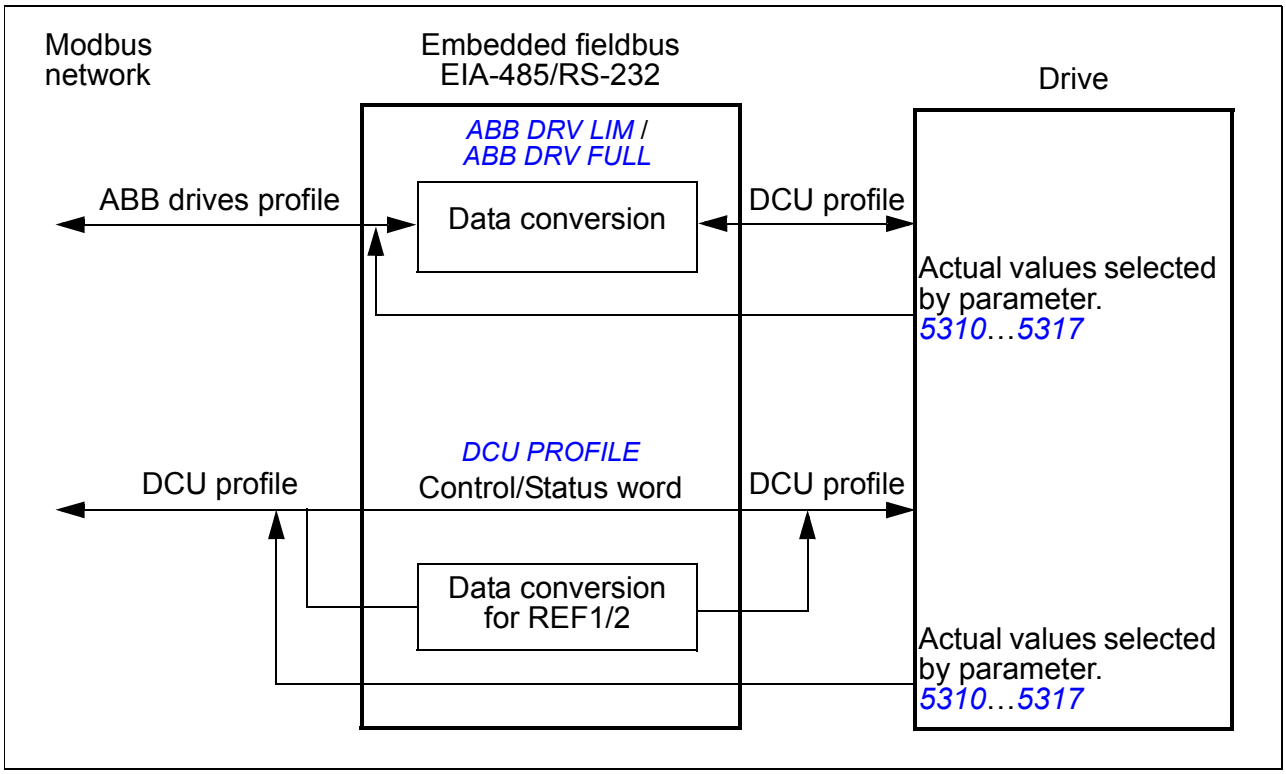

ABB drives communication profile

Two implementations of the ABB drives communication profile are available: ABB drives full and ABB drives limited. The ABB drives communication profile is active when parameter *5305 EFB CTRL PROFILE* is set to *ABB DRV FULL* or *ABB DRV LIM*. The Control word and Status word for the profile are described below.

The ABB drives communication profiles can be used through both EXT1 and EXT2. The Control word commands are in effect when parameter *1001 EXT1 COMMANDS* or *1002 EXT2 COMMANDS* (whichever control location is active) is set to *COMM*.

The table below and the state diagram on page 295 describe the Control word content for the ABB drives profile. The upper case boldface text refers to the states shown in the diagram.

ABB drives profile Control word, parameter 5319 EFB PAR 19			
Bit	**Name**	**Value**	**Comments**
0	OFF1 CONTROL	1	Enter **READY TO OPERATE.**
		0	Stop along currently active deceleration ramp (2203/2206). Enter OFF1 ACTIVE; proceed to READY TO SWITCH ON unless other interlocks (OFF2, OFF3) are active.
1	OFF2 CONTROL	1	Continue operation (OFF2 inactive).
		0	Emergency OFF, drive coast to stop. Enter **OFF2 ACTIVE**; proceed to **SWITCH-ON INHIBITED**.
2	OFF3 CONTROL	1	Continue operation (OFF3 inactive).
		0	Emergency stop, drive stops within time defined by par. 2208. Enter **OFF3 ACTIVE**; proceed to **SWITCH-ON INHIBITED**. **WARNING:** Ensure motor and driven machine can be stopped using this stop mode.
3	INHIBIT OPERATION	1	Enter **OPERATION ENABLED**. (**Note:** The Run enable signal must be active; see parameter 1601. If par. 1601 is set to COMM, this bit also activates the Run enable signal.)
		0	Inhibit operation. Enter **OPERATION INHIBITED**.
4	**Note:** Bit 4 is supported only by ABB DRV FULL profile.		
	RAMP_OUT_ ZERO (ABB DRV FULL)	1	Enter **RAMP FUNCTION GENERATOR: OUTPUT ENABLED**.
		0	Force Ramp function generator output to zero. Drive ramps to stop (current and DC voltage limits in force).
5	RAMP_HOLD	1	Enable ramp function. Enter **RAMP FUNCTION GENERATOR: ACCELERATOR ENABLED**.
		0	Halt ramping (Ramp function generator output held).
6	RAMP_IN_ ZERO	1	Normal operation. Enter **OPERATING**.
		0	Force Ramp function generator input to zero.
7	RESET	0=>1	Fault reset if an active fault exists. Enter **SWITCH-ON INHIBITED**. Effective if par. 1604 is set to COMM.
		0	Continue normal operation.
8…9	Not in use		
10	**Note:** Bit 10 is supported only by ABB DRV FULL.		
	REMOTE_CMD (ABB DRV FULL)	1	Fieldbus control enabled.
		0	Control word ≠ 0 or Reference ≠ 0: Retain last Control word and Reference. Control word = 0 and Reference = 0: Fieldbus control enabled. Reference and deceleration/acceleration ramp are locked.
11	EXT CTRL LOC	1	Select external control location EXT2. Effective if par. 1102 is set to COMM.
		0	Select external control location EXT1. Effective if par. 1102 is set to COMM.

ABB drives profile Control word, parameter *5319 EFB PAR 19*			
Bit	**Name**	**Value**	**Comments**
12…15	Reserved		

The table below and the state diagram on page *295* describe the Status word content for the ABB drives profile. The upper case boldface text refers to the states shown in the diagram.

ABB drives profile (EFB) Status word, parameter *5320 EFB PAR 20*			
Bit	**Name**	**Value**	**STATE/Description (Correspond to states/boxes in the state diagram)**
0	RDY_ON	1	**READY TO SWITCH ON**
		0	**NOT READY TO SWITCH ON**
1	RDY_RUN	1	**READY TO OPERATE**
		0	**OFF1 ACTIVE**
2	RDY_REF	1	**OPERATION ENABLED**
		0	**OPERATION INHIBITED**
3	TRIPPED	0…1	**FAULT**. See chapter *Fault tracing* on page *301*.
		0	No fault
4	OFF_2_STA	1	OFF2 inactive
		0	**OFF2 ACTIVE**
5	OFF_3_STA	1	OFF3 inactive
		0	**OFF3 ACTIVE**
6	SWC_ON_INHIB	1	**SWITCH-ON INHIBITED**
		0	Switch-on inhibit not active
7	ALARM	1	Alarm. See chapter *Fault tracing* on page *301*.
		0	No alarm
8	AT_SETPOINT	1	**OPERATING**. Actual value equals reference value (= is within tolerance limits, ie the difference between the output frequency and the frequency reference is less than or equal to 4/1%* of the nominal motor frequency). * Asymmetric hysteresis: 4% when frequency enters the reference area, 1% when frequency exits the reference area.
		0	Actual value differs from reference value (= is outside tolerance limits).
9	REMOTE	1	Drive control location: REMOTE (EXT1 or EXT2)
		0	Drive control location: LOCAL
10	ABOVE_LIMIT	1	Supervised parameter value exceeds the supervision high limit. Bit value is 1 until the supervised parameter value falls below the supervision low limit. See parameter group *32 SUPERVISION*.
		0	Supervised parameter value falls below the supervision low limit. Bit value is 0 until the supervised parameter value exceeds the supervision high limit. See parameter group *32 SUPERVISION*.

ABB drives profile (EFB) Status word, parameter *5320 EFB PAR 20*			
Bit	**Name**	**Value**	**STATE/Description (Correspond to states/boxes in the state diagram)**
11	EXT CTRL LOC	1	External control location EXT2 selected
		0	External control location EXT1 selected
12	EXT RUN ENABLE	1	External Run enable signal received
		0	No external Run enable received
13…15	Reserved		

The state diagram below describes the start-stop function of Control word (CW) and Status word (SW) bits for the ABB drives profile.

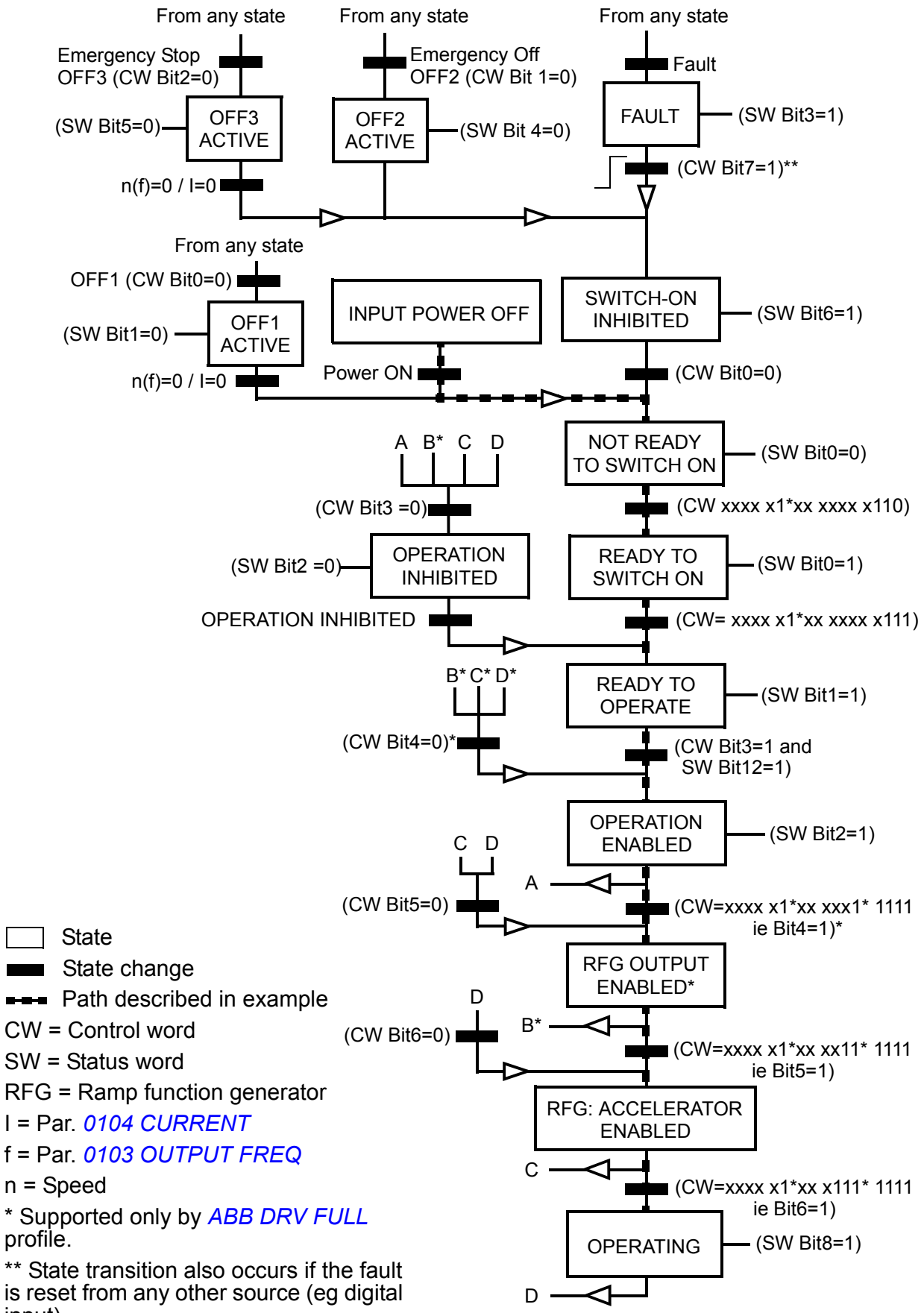

DCU communication profile

Because the DCU profile extends the control and status interface to 32 bits, two different signals are needed for both the control (*0301* and *0302*) and status (*0303* and *0304*) words.

The following tables describe the Control word content for the DCU profile.

DCU profile Control word, parameter *0301 FB CMD WORD 1*			
Bit	**Name**	**Value**	**Information**
0	STOP	1	Stop according to either the stop mode parameter (*2102*) or the stop mode requests (bits 7 and 8). **Note:** Simultaneous STOP and START commands result in a stop command.
		0	No operation
1	START	1	Start **Note:** Simultaneous STOP and START commands result in a stop command.
		0	No operation
2	REVERSE	1	Reverse direction. The direction is defined by using the XOR operation on bit 2 and 31 (= sign of the reference) values.
		0	Forward direction.
3	LOCAL	1	Enter the local control mode.
		0	Enter external control mode.
4	RESET	-> 1	Reset.
		other	No operation
5	EXT2	1	Switch to external control EXT2.
		0	Switch to external control EXT1.
6	RUN_DISABLE	1	Activate Run disable.
		0	Activate Run enable.
7	STPMODE_R	1	Stop along currently active deceleration ramp (bit 10). Bit 0 value must be 1 (= STOP).
		0	No operation
8	STPMODE_EM	1	Emergency stop. Bit 0 value must be 1 (= STOP).
		0	No operation
9	STPMODE_C	1	Coast to stop. Bit 0 value must be 1 (= STOP).
		0	No operation
10	RAMP_2	1	Use acceleration/deceleration ramp pair 2 (defined by parameters *2205*…*2207*).
		0	Use acceleration/deceleration ramp pair 1 (defined by parameters *2202*…*2204*).
11	RAMP_OUT_0	1	Force ramp output to zero.
		0	No operation
12	RAMP_HOLD	1	Halt ramping (Ramp function generator output held).
		0	No operation

DCU profile Control word, parameter *0301 FB CMD WORD 1*			
Bit	**Name**	**Value**	**Information**
13	RAMP_IN_0	1	Force ramp input to zero.
		0	No operation
14	REQ_LOCALLOC	1	Enable local lock. Entering the local control mode is disabled (LOC/REM key of the panel).
		0	No operation
15	Reserved		

DCU profile Control word, parameter *0302 FB CMD WORD 2*			
Bit	**Name**	**Value**	**Information**
16	FBLOCAL_CTL	1	Fieldbus local mode for Control word requested. **Example:** If the drive is in remote control and the start/stop/direction command source is DI for external control location 1 (EXT1): by setting bit 16 to value 1, the start/stop/direction is controlled by the fieldbus command word.
		0	No fieldbus local mode
17	FBLOCAL_REF	1	Fieldbus local mode Control word for reference requested. See example in bit 16 FBLOCAL_CTL.
		0	No fieldbus local mode
18	START_DISABLE1	1	No Start enable
		0	Enable start. Effective if parameter *1608* setting is *COMM*.
19	START_DISABLE2	1	No Start enable
		0	Enable start. Effective if parameter *1609* setting is *COMM*.
20…26	Reserved		
27	REF_CONST	1	Constant speed reference request. This is an internal control bit. Only for supervision.
		0	No operation
28	REF_AVE	1	Average speed reference request. This is an internal control bit. Only for supervision.
		0	No operation
29	LINK_ON	1	Master detected on fieldbus link. This is an internal control bit. Only for supervision.
		0	Fieldbus link is down.
30	REQ_STARTINH	1	Start inhibit
		0	No start inhibit
31	Reserved		

The following tables describe the Status word content for the DCU profile.

DCU profile Status word, parameter *0303 FB STS WORD 1*			
Bit	**Name**	**Value**	**Information**
0	READY	1	Drive is ready to receive start command.
		0	Drive is not ready.
1	ENABLED	1	External Run enable signal received.
		0	No external Run enable signal received.
2	STARTED	1	Drive has received start command.
		0	Drive has not received start command.
3	RUNNING	1	Drive is modulating.
		0	Drive is not modulating.
4	ZERO_SPEED	1	Drive is at zero speed.
		0	Drive has not reached zero speed.
5	ACCELERATE	1	Drive is accelerating.
		0	Drive is not accelerating.
6	DECELERATE	1	Drive is decelerating.
		0	Drive is not decelerating.
7	AT_SETPOINT	1	Drive is at setpoint. Actual value equals reference value (ie is within tolerance limits).
		0	Drive has not reached setpoint.
8	LIMIT	1	Operation is limited by group *20 LIMITS* settings.
		0	Operation is within group *20 LIMITS* settings.
9	SUPERVISION	1	A supervised parameter (group *32 SUPERVISION*) is outside its limits.
		0	All supervised parameters are within limits.
10	REV_REF	1	Drive reference is in reverse direction.
		0	Drive reference is in forward direction.
11	REV_ACT	1	Drive is running in reverse direction.
		0	Drive is running in forward direction.
12	PANEL_LOCAL	1	Control is in control panel (or PC tool) local mode.
		0	Control is not in control panel local mode.
13	FIELDBUS_LOCAL	1	Control is in fieldbus local mode
		0	Control is not in fieldbus local mode.
14	EXT2_ACT	1	Control is in EXT2 mode.
		0	Control is in EXT1 mode.
15	FAULT	1	Drive is in a fault state.
		0	Drive is not in a fault state.

DCU profile Status word, parameter *0304 FB STS WORD 2*			
Bit	**Name**	**Value**	**Information**
16	ALARM	1	An alarm is on.
		0	No alarms are on.
17	NOTICE	1	A maintenance request is pending.
		0	No maintenance request
18	DIRLOCK	1	Direction lock is ON. (Direction change is locked.)
		0	Direction lock is OFF.
19	LOCALLOCK	1	Local mode lock is ON. (Local mode is locked.)
		0	Local mode lock is OFF.
20	CTL_MODE	1	N/A
		0	Drive is in scalar control mode.
21…25	Reserved		
26	REQ_CTL	1	Control word requested from fieldbus
		0	No operation
27	REQ_REF1	1	Reference 1 requested from fieldbus
		0	Reference 1 is not requested from fieldbus.
28	REQ_REF2	1	Reference 2 requested from fieldbus
		0	Reference 2 is not requested from fieldbus.
29	REQ_REF2EXT	1	External PID reference 2 requested from fieldbus
		0	External PID reference 2 is not requested from fieldbus.
30	ACK_STARTINH	1	Start inhibit from fieldbus
		0	No start inhibit from fieldbus
31	Reserved		

14

Fault tracing

What this chapter contains

The chapter tells how to reset faults and view fault history. It also lists all alarm and fault messages including the possible cause and corrective actions.

Safety

WARNING! Only qualified electricians are allowed to maintain the drive. Read the safety instructions in chapter *Safety* on page *15* before you work on the drive.

Alarm and fault indications

Fault is indicated with a red LED. See section *LEDs* on page *323*.

An alarm or fault message on the panel display indicates abnormal drive status. Using the information given in this chapter most alarm and fault causes can be identified and corrected. If not, contact an ABB representative.

The four digit code number in parenthesis after the fault is for the fieldbus communication. See chapter *Fieldbus control with the embedded fieldbus* on page *277*.

How to reset

The drive can be reset either by pressing the keypad key RESET EXIT (Basic control panel) or RESET (Assistant control panel), through digital input or fieldbus, or by switching the supply voltage off for a while. The source for the fault reset signal is selected by

parameter *1604 FAULT RESET SEL*. When the fault has been removed, the motor can be restarted.

Fault history

When a fault is detected, it is stored in the fault history. The latest faults are stored together with the time stamp.

Parameters *0401 LAST FAULT*, *0412 PREVIOUS FAULT 1* and *0413 PREVIOUS FAULT 2* store the most recent faults. Parameters *0404*…*0409* show drive operation data at the time the latest fault occurred. The Assistant control panel provides additional information about the fault history. See section *Fault logger mode* on page *94* for more information.

Alarm messages generated by the drive

CODE	ALARM	CAUSE	WHAT TO DO
2001	OVERCURRENT *0308* bit 0 (programmable fault function *1610*)	Output current limit controller is active.	Check motor load. Check acceleration time (*2202* and *2205*). Check motor and motor cable (including phasing). Check ambient conditions. Load capacity decreases if installation site ambient temperature exceeds 40 °C. See section *Derating* on page *327*.
2002	OVERVOLTAGE *0308* bit 1 (programmable fault function *1610*)	DC overvoltage controller is active.	Check deceleration time (*2203* and *2206*). Check input power line for static or transient overvoltage.
2003	UNDERVOLTAGE *0308* bit 2 (programmable fault function *1610*)	DC undervoltage controller is active.	Check input power supply.
2004	DIR LOCK *0308* bit 3	Change of direction is not allowed.	Check parameter *1003 DIRECTION* settings.
2005	IO COMM *0308* bit 4 (programmable fault function *3018*, *3019*)	Fieldbus communication break	Check status of fieldbus communication. See chapter *Fieldbus control with the embedded fieldbus* on page *277*. Check fault function parameter settings. Check connections. Check if master can communicate.
2006	AI1 LOSS *0308* bit 5 (programmable fault function *3001*, *3021*)	Analog input AI1 signal has fallen below limit defined by parameter *3021 AI1 FAULT LIMIT*.	Check fault function parameter settings. Check for proper analog control signal levels. Check connections.
2007	AI2 LOSS *0308* bit 6 (programmable fault function *3001*, *3022*)	Analog input AI2 signal has fallen below limit defined by parameter *3022 AI2 FAULT LIMIT*.	Check fault function parameter settings. Check for proper analog control signal levels. Check connections.

CODE	ALARM	CAUSE	WHAT TO DO
2008	PANEL LOSS *0308* bit 7 (programmable fault function *3002*)	Control panel selected as active control location for drive has ceased communicating.	Check panel connection. Check fault function parameters. Check control panel connector. Refit control panel in mounting platform. If drive is in external control mode (REM) and is set to accept start/stop, direction commands or references through control panel: Check group *10 START/STOP/DIR* and *11 REFERENCE SELECT* settings.
2009	DEVICE OVERTEMP *0308* bit 8	Drive IGBT temperature is excessive. Alarm limit is 120 °C.	Check ambient conditions. See also section *Derating* on page *327*. Check air flow and fan operation. Check motor power against drive power.
2010	MOTOR TEMP *0308* bit 9 (programmable fault function *3005*…*3009* / *3503*)	Motor temperature is too high (or appears to be too high) due to excessive load, insufficient motor power, inadequate cooling or incorrect start-up data.	Check motor ratings, load and cooling. Check start-up data. Check fault function parameters.
		Measured motor temperature has exceeded alarm limit set by parameter *3503 ALARM LIMIT*.	Check value of alarm limit. Check that actual number of sensors corresponds to value set by parameter *3501 SENSOR TYPE*. Let motor cool down. Ensure proper motor cooling: Check cooling fan, clean cooling surfaces, etc.
2012	MOTOR STALL *0308* bit 11 (programmable fault function *3010*…*3012*)	Motor is operating in stall region due to eg excessive load or insufficient motor power.	Check motor load and drive ratings. Check fault function parameters.
2013 1)	AUTORESET *0308* bit 12	Automatic reset alarm	Check parameter group *31 AUTOMATIC RESET* settings.
2014 1)	AUTOCHANGE *0308* bit 13	PFC Autochange function is active.	See parameter group *81 PFC CONTROL*, section *PFC control macro* on page *110* and section *SPFC control macro* on page *111*.
2015	PFC I LOCK *0308* bit 14	PFC Interlocks are active.	Drive cannot start • any motor (when Autochange is used) • the speed regulated motor (when Autochange is not used). See parameter group *81 PFC CONTROL*.
2018 1)	PID SLEEP *0309* bit 1	Sleep function has entered sleeping mode.	See parameter groups *40 PROCESS PID SET 1*… *41 PROCESS PID SET 2*.

CODE	ALARM	CAUSE	WHAT TO DO
2021	START ENABLE 1 MISSING *0309* bit 4	No Start enable 1 signal received	Check parameter *1608 START ENABLE 1* settings. Check digital input connections. Check fieldbus communication settings.
2022	START ENABLE 2 MISSING *0309* bit 5	No Start enable 2 signal received	Check parameter *1609 START ENABLE 2* settings. Check digital input connections. Check fieldbus communication settings.
2023	EMERGENCY STOP *0309* bit 6	Drive has received emergency stop command and ramps to stop according to ramp time defined by parameter *2208 EMERG DEC TIME*.	Check that it is safe to continue operation. Return emergency stop push button to normal position.
2025	FIRST START *0309* bit 8	Motor identification magnetization is on. This alarm belongs to normal start-up procedure.	Wait until drive indicates that motor identification is completed.
2026	INPUT PHASE LOSS *0309* bit 9 (programmable fault function *3016*)	Intermediate circuit DC voltage is oscillating due to missing input power line phase or blown fuse. Alarm is generated when DC voltage ripple exceeds 14% of nominal DC voltage.	Check input power line fuses. Check for input power supply imbalance. Check fault function parameters.
2027	USER LOAD CURVE *0309* bit 10	Condition defined by *3701 USER LOAD C MODE* has been valid longer than half of the time set by *3703 USER LOAD C TIME*.	See parameter group *37 USER LOAD CURVE*.
2028	START DELAY *0309* bit 11	Start delay in progress	See parameter *2113 START DELAY*.
2030	INLET LOW *0309* bit 13	Pressure at pump/fan inlet too low	Check for a closed valve on the inlet side of the pump/fan. Check piping for leaks. See parameter group *44 PUMP PROTECTION*.
2031	OUTLET HIGH *0309* bit 14	Pressure at pump/fan outlet too high	Check piping for blocks. See parameter group *44 PUMP PROTECTION*.
2032	PIPE FILL *0309* bit 15	Pipe fill in progress	See parameters *4421*…*4426*.

CODE	ALARM	CAUSE	WHAT TO DO
2033	INLET VERY LOW *0310* bit 0	Pressure at pump/fan inlet too low	Check for a closed valve on the inlet side of the pump/fan. Check piping for leaks. See parameter group *44 PUMP PROTECTION*.
2034	OUTLET VERY HIGH *0310* bit 1	Pressure at pump/fan outlet too high	Check piping for blocks. See parameter group *44 PUMP PROTECTION*.

[1)] Even when the relay output is configured to indicate alarm conditions (eg parameter *1401 RELAY OUTPUT 1* = 5 (*ALARM*) or 16 (*FLT/ALARM*)), this alarm is not indicated by a relay output.

Alarms generated by the Basic control panel

The Basic control panel indicates control panel alarms with a code, A5xxx.

ALARM CODE	CAUSE	WHAT TO DO
5001	Drive is not responding.	Check panel connection.
5002	Incompatible communication profile	Contact your local ABB representative.
5010	Corrupted panel parameter backup file	Retry parameter upload. Retry parameter download.
5011	Drive is controlled from another source.	Change drive control to the local control mode.
5012	Direction of rotation is locked.	Enable change of direction. See parameter *1003 DIRECTION*.
5013	Panel control is disabled because start inhibit is active.	Start from the panel is not possible. Reset the emergency stop command or remove the 3-wire stop command before starting from the panel. See section *3-wire macro* on page *105* and parameters *1001 EXT1 COMMANDS*, *1002 EXT2 COMMANDS* and *2109 EMERG STOP SEL*.
5014	Panel control is disabled because of drive fault.	Reset drive fault and retry.
5015	Panel control is disabled because the local control mode lock is active.	Deactivate the local control mode lock and retry. See parameter *1606 LOCAL LOCK*.
5018	Parameter default value is not found.	Contact your local ABB representative.
5019	Writing non-zero parameter value is prohibited.	Only parameter reset is allowed.
5020	Parameter or parameter group does not exist or parameter value is inconsistent.	Contact your local ABB representative.
5021	Parameter or parameter group is hidden.	Contact your local ABB representative.
5022	Parameter is write protected.	Parameter value is read-only and cannot be changed.
5023	Parameter change is not allowed, when drive is running.	Stop drive and change parameter value.
5024	Drive is executing a task.	Wait until task is completed.
5025	Software is being uploaded or downloaded.	Wait until upload/download is complete.
5026	Value is at or below minimum limit.	Contact your local ABB representative.
5027	Value is at or above maximum limit.	Contact your local ABB representative.
5028	Invalid value	Contact your local ABB representative.

ALARM CODE	CAUSE	WHAT TO DO
5029	Memory is not ready.	Retry.
5030	Invalid request	Contact your local ABB representative.
5031	Drive is not ready for operation, eg due to low DC voltage.	Check input power supply.
5032	Parameter error	Contact your local ABB representative.
5040	Parameter download error. Selected parameter set is not in current parameter backup file.	Perform upload function before download.
5041	Parameter backup file does not fit into memory.	Contact your local ABB representative.
5042	Parameter download error. Selected parameter set is not in current parameter backup file.	Perform upload function before download.
5043	No start inhibit	
5044	Parameter backup file restoring error	Check that file is compatible with drive.
5050	Parameter upload aborted	Retry parameter upload.
5051	File error	Contact your local ABB representative.
5052	Parameter upload has failed.	Retry parameter upload.
5060	Parameter download aborted	Retry parameter download.
5062	Parameter download has failed.	Retry parameter download.
5070	Panel backup memory write error	Contact your local ABB representative.
5071	Panel backup memory read error	Contact your local ABB representative.
5080	Operation is not allowed because the drive is not in the local control mode.	Switch to the local control mode.
5081	Operation is not allowed because of active fault.	Check cause of fault and reset fault.
5083	Operation is not allowed because parameter lock is on.	Check parameter *1602 PARAMETER LOCK* setting.
5084	Operation is not allowed because drive is performing a task.	Wait until task is completed and retry.
5085	Parameter download from source to destination drive has failed.	Check that source and destination drive types are same, ie ACS310. See the type designation label of the drive.
5086	Parameter download from source to destination drive has failed.	Check that source and destination drive type designations are the same. See type designation labels of the drives.

ALARM CODE	CAUSE	WHAT TO DO
5087	Parameter download from source to destination drive has failed because parameter sets are incompatible.	Check that source and destination drive information are same. See parameters in group *33 INFORMATION*.
5088	Operation has failed because of drive memory error.	Contact your local ABB representative.
5089	Download has failed because of CRC error.	Contact your local ABB representative.
5090	Download has failed because of data processing error.	Contact your local ABB representative.
5091	Operation has failed because of parameter error.	Contact your local ABB representative.
5092	Parameter download from source to destination drive has failed because parameter sets are incompatible.	Check that source and destination drive information are same. See parameters in group *33 INFORMATION*.

Fault messages generated by the drive

CODE	FAULT	CAUSE	WHAT TO DO
0001	OVERCURRENT (2310) *0305* bit 0	Output current has exceeded trip level.	Check motor load. Check acceleration time (*2202* and *2205*). Check motor and motor cable (including phasing). Check ambient conditions. Load capacity decreases if installation site ambient temperature exceeds 40 °C. See section *Derating* on page *327*.
0002	DC OVERVOLT (3210) *0305* bit 1	Excessive intermediate circuit DC voltage. DC overvoltage trip limit is 420 V for 200 V drives and 840 V for 400 V drives.	Check that overvoltage controller is on (parameter *2005 OVERVOLT CTRL*). Check input power line for static or transient overvoltage. Check deceleration time (*2203*, *2206*).
0003	DEV OVERTEMP (4210) *0305* bit 2	Drive IGBT temperature is excessive. Fault trip limit is 135 °C.	Check ambient conditions. See also section *Derating* on page *327*. Check air flow and fan operation. Check motor power against drive power.
0004	SHORT CIRC (2340) *0305* bit 3	Short circuit in motor cable(s) or motor	Check motor and motor cable.
0006	DC UNDERVOLT (3220) *0305* bit 5	Intermediate circuit DC voltage is not sufficient due to missing input power line phase, blown fuse, rectifier bridge internal fault or too low input power.	Check that undervoltage controller is on (parameter *2006 UNDERVOLT CTRL*). Check input power supply and fuses.
0007	AI1 LOSS (8110) *0305* bit 6 (programmable fault function *3001*, *3021*)	Analog input AI1 signal has fallen below limit defined by parameter *3021 AI1 FAULT LIMIT*.	Check fault function parameter settings. Check for proper analog control signal levels. Check connections.
0008	AI2 LOSS (8110) *0305* bit 7 (programmable fault function *3001*, *3022*)	Analog input AI2 signal has fallen below limit defined by parameter *3022 AI2 FAULT LIMIT*.	Check fault function parameter settings. Check for proper analog control signal levels. Check connections.

CODE	FAULT	CAUSE	WHAT TO DO
0009	MOT OVERTEMP (4310) *0305* bit 8 (programmable fault function *3005*…*3009* / *3504*)	Motor temperature is too high (or appears to be too high) due to excessive load, insufficient motor power, inadequate cooling or incorrect start-up data.	Check motor ratings, load and cooling. Check start-up data. Check fault function parameters.
		Measured motor temperature has exceeded fault limit set by parameter *3504 FAULT LIMIT*.	Check value of fault limit. Check that actual number of sensors corresponds to value set by parameter *3501 SENSOR TYPE*. Let motor cool down. Ensure proper motor cooling: Check cooling fan, clean cooling surfaces, etc.
0010	PANEL LOSS (5300) *0305* bit 9 (programmable fault function *3002*)	Control panel selected as active control location for drive has ceased communicating.	Check panel connection. Check fault function parameters. Check control panel connector. Refit control panel in mounting platform. If drive is in external control mode (REM) and is set to accept start/stop, direction commands or references through control panel: Check group *10 START/STOP/DIR* and *11 REFERENCE SELECT* settings.
0012	MOTOR STALL (7121) *0305* bit 11 (programmable fault function *3010*…*3012*)	Motor is operating in stall region due to eg excessive load or insufficient motor power.	Check motor load and drive ratings. Check fault function parameters.
0014	EXT FAULT 1 (9000) *0305* bit 13 (programmable fault function *3003*)	External fault 1	Check external devices for faults. Check parameter *3003 EXTERNAL FAULT 1* setting.
0015	EXT FAULT 2 (9001) *0305* bit 14 (programmable fault function *3004*)	External fault 2	Check external devices for faults. Check parameter *3004 EXTERNAL FAULT 2* setting.
0016	EARTH FAULT (2330) *0305* bit 15 (programmable fault function *3017*)	Drive has detected earth (ground) fault in motor or motor cable.	Check motor. Check motor cable. Motor cable length must not exceed maximum specifications. See section *Motor connection data* on page *334*. **Note:** Disabling earth fault (ground fault) may void the warranty.

CODE	FAULT	CAUSE	WHAT TO DO
0018	THERM FAIL (5210) *0306* bit 1	Drive internal fault. Thermistor used for drive internal temperature measurement is open or short circuited.	Contact your local ABB representative.
0021	CURR MEAS (2211) *0306* bit 4	Drive internal fault. Current measurement is out of range.	Contact your local ABB representative.
0022	SUPPLY PHASE (3130) *0306* bit 5	Intermediate circuit DC voltage is oscillating due to missing input power line phase or blown fuse. Trip occurs when DC voltage ripple exceeds 14% of nominal DC voltage.	Check input power line fuses. Check for input power supply imbalance. Check fault function parameters.
0024	OVERSPEED (7310) *0306* bit 7	Motor is turning faster than highest allowed speed due to incorrectly set minimum/maximum speed. Operating range limits are set by parameters *2007 MINIMUM FREQ* and *2008 MAXIMUM FREQ*.	Check minimum/maximum frequency settings. Check adequacy of motor braking torque.
0026	DRIVE ID (5400) *0306* bit 9	Internal drive ID fault	Contact your local ABB representative.
0027	CONFIG FILE (630F) *0306* bit 10	Internal configuration file error	Contact your local ABB representative.
0028	SERIAL 1 ERR (7510) *0306* bit 11 (programmable fault function *3018*, *3019*)	Fieldbus communication break	Check status of fieldbus communication. See chapter *Fieldbus control with the embedded fieldbus* on page *277*. Check fault function parameter settings. Check connections. Check if master can communicate.
0029	EFB CON FILE (6306) *0306* bit 12	Configuration file reading error	Contact your local ABB representative.
0030	FORCE TRIP (FF90) *0306* bit 13	Trip command received from fieldbus	See appropriate communication module manual.

CODE	FAULT	CAUSE	WHAT TO DO
0031	EFB 1 (FF92) *0307* bit 0	Error from the embedded fieldbus (EFB) protocol application. The meaning is protocol dependent.	See chapter *Fieldbus control with the embedded fieldbus* on page *277*.
0032	EFB 2 (FF93) *0307* bit 1		
0033	EFB 3 (FF94) *0307* bit 2		
0035	OUTP WIRING (FF95) *0306* bit 15 (programmable fault function *3023*)	Incorrect input power and motor cable connection (ie, input power cable is connected to drive motor connection). The fault can be erroneously declared if the drive is faulty or the input power is a delta grounded system and the motor cable capacitance is large.	Check input power connections.
0036	INCOMPATIBLE SW (630F) *0307* bit 3	Loaded software is not compatible.	Contact your local ABB representative.
0038	USER LOAD CURVE (FF6B) *0307* bit 4	Condition defined by *3701 USER LOAD C MODE* has been valid longer than the time set by *3703 USER LOAD C TIME*.	See parameter group *37 USER LOAD CURVE*.
0039	UNKNOWN EXTENSION (7086) *0307* bit 5	Option module not supported by the drive firmware is connected to the drive.	Check connections.
0040	INLET VERY LOW (8A81) *0307* bit 6	Pressure at pump/fan inlet too low	Check for a closed valve on the inlet side of the pump/fan. Check piping for leaks. See parameter group *44 PUMP PROTECTION*.
0041	OUTLET VERY HIGH (8A83) *0307* bit 7	Pressure at pump/fan outlet too high	Check piping for blocks. See parameter group *44 PUMP PROTECTION*.
0042	INLET LOW (8A80) *0307* bit 8	Pressure at pump/fan inlet too low	Check for a closed valve on the inlet side of the pump/fan. Check piping for leaks. See parameter group *44 PUMP PROTECTION*.

CODE	FAULT	CAUSE	WHAT TO DO
0043	OUTLET HIGH (8A82) *0307* bit 9	Pressure at pump/fan outlet too high	Check piping for blocks. See parameter group *44 PUMP PROTECTION*.
0101	SERF CORRUPT (FF55) *0307* bit 14	Drive internal error	Write down fault code and contact your local ABB representative.
0103	SERF MACRO (FF55) *0307* bit 14		
0201	DSP T1 OVERLOAD (6100) *0307* bit 13		
0202	DSP T2 OVERLOAD (6100) *0307* bit 13		
0203	DSP T3 OVERLOAD (6100) *0307* bit 13		
0204	DSP STACK ERROR (6100) *0307* bit 12		
0206	CB ID ERROR (5000) *0307* bit 11		
1000	PAR HZRPM (6320) *0307* bit 15	Incorrect frequency limit parameter setting	Check parameter settings. Check that following applies: • *2007 MINIMUM FREQ* < *2008 MAXIMUM FREQ* • *2007 MINIMUM FREQ* / *9907 MOTOR NOM FREQ* and *2008 MAXIMUM FREQ* / *9907 MOTOR NOM FREQ* are within range.
1001	PAR PFC REF NEG (6320) *0307* bit 15	Incorrect PFC parameters	Check parameter group *81 PFC CONTROL* settings. Check that following applies: • *2007 MINIMUM FREQ* > 0 when *8123* is *ACTIVE* or *SPFC ACTIVE*.
1003	PAR AI SCALE (6320) *0307* bit 15	Incorrect analog input AI signal scaling	Check parameter group *13 ANALOG INPUTS* settings. Check that following applies: • *1301 MINIMUM AI1* < *1302 MAXIMUM AI1* • *1304 MINIMUM AI2* < *1305 MAXIMUM AI2*.

CODE	FAULT	CAUSE	WHAT TO DO
1004	PAR AO SCALE (6320) *0307* bit 15	Incorrect analog output AO signal scaling	Check parameter group *15 ANALOG OUTPUTS* settings. Check that following applies: • *1504 MINIMUM AO1* < *1505 MAXIMUM AO1*.
1006	PAR EXT RO (6320) *0307* bit 15	Incorrect extension relay output parameters	Check parameter settings. Check that following applies: • MREL relay output extension module is connected to the drive. • *1402*…*1403 RELAY OUTPUT 2* … *RELAY OUTPUT 3* and *1410 RELAY OUTPUT 4* have non-zero values. See *MREL-01 relay output extension module user's manual* (3AUA0000035974 [English]).
1012	PAR PFC IO 1 (6320) *0307* bit 15	I/O configuration for PFC not complete	Check parameter settings. Following must apply: • There are enough relays parameterized for PFC. • No conflict exists between parameter group *14 RELAY OUTPUTS*, parameter *8117 NR OF AUX MOT* and parameter *8118 AUTOCHNG INTERV*.
1013	PAR PFC IO 2 (6320) *0307* bit 15	I/O configuration for PFC not complete	Check parameter settings. Following must apply: • The actual number of PFC motors (parameter *8127 MOTORS*) matches the PFC motors in parameter group *14 RELAY OUTPUTS* and parameter *8118 AUTOCHNG INTERV*.
1014	PAR PFC IO 3 (6320) *0307* bit 15	I/O configuration for PFC not complete. The drive is unable to allocate a digital input (interlock) for each PFC motor.	See parameters *8120 INTERLOCKS* and *8127 MOTORS*.
1015	PAR USER U/F (6320) *0307* bit 15	Incorrect voltage to frequency (U/f) ratio voltage setting.	Check parameter *2610 USER DEFINED U1*…*2617 USER DEFINED F4* settings.
1017	PAR SETUP 1 (6320) *0307* bit 15	It is not allowed to use frequency input signal and frequency output signal simultaneously.	Disable frequency output or frequency input: • change transistor output to digital mode (value of parameter *1804 TO MODE* = *DIGITAL*), or • change frequency input selection to other value in parameter groups *11 REFERENCE SELECT*, *40 PROCESS PID SET 1*, *41 PROCESS PID SET 2* and *42 EXT / TRIM PID*.

CODE	FAULT	CAUSE	WHAT TO DO
1026	PAR USER LOAD C (6320) *0307* bit 15	Incorrect user load curve parameter setting	Check parameter settings. Following must apply: • *3704 LOAD FREQ 1* ≤ *3707 LOAD FREQ 2* ≤ *3710 LOAD FREQ 3* ≤ *3713 LOAD FREQ 4* ≤ *3716 LOAD FREQ 5* • *3705 LOAD TORQ LOW 1* < *3706 LOAD TORQ HIGH 1* • *3708 LOAD TORQ LOW 2* < *3709 LOAD TORQ HIGH 2* • *3711 LOAD TORQ LOW 3* < *3712 LOAD TORQ HIGH 3* • *3714 LOAD TORQ LOW 4* < *3715 LOAD TORQ HIGH 4* • *3717 LOAD TORQ LOW 5* < *3718 LOAD TORQ HIGH 5*.

Embedded fieldbus faults

Embedded fieldbus faults can be traced by monitoring group *53 EFB PROTOCOL* parameters. See also fault/alarm *SERIAL 1 ERR*.

No master device

If there is no master device on line, parameter *5306 EFB OK MESSAGES* and *5307 EFB CRC ERRORS* values remain unchanged.

What to do:

- Check that the network master is connected and properly configured.
- Check the cable connection.

Same device address

If two or more devices have the same address, parameter *5307 EFB CRC ERRORS* value increases with every read/write command.

What to do:

- Check the device addresses. No two devices on line may have the same address.

Incorrect wiring

If the communication wires are swapped (terminal A on one device is connected to terminal B on another device), parameter *5306 EFB OK MESSAGES*S value remains unchanged and parameter *5307 EFB CRC ERRORS* increases.

What to do:

- Check the EIA-485/RS-232 interface connection.

15

Maintenance and hardware diagnostics

What this chapter contains

The chapter contains preventive maintenance instructions and LED indicator descriptions.

Maintenance intervals

If installed in an appropriate environment, the drive requires very little maintenance. The table lists the routine maintenance intervals recommended by ABB.

Maintenance	Interval	Instruction
Reforming of capacitors	Every year when stored	See *Capacitors* on page *321*.
Check of dustiness, corrosion and temperature	Every year	
Replacement of the cooling fan (frame sizes R1…R4)	Every three years	See *Cooling fan* on page *320*.
Check and tightening of the power terminals	Every six years	See *Power connections* on page *322*.
Replacement of the battery in the Assistant control panel	Every ten years	See *Changing the battery in the Assistant control panel* on page *322*.

Consult your local ABB Service representative for more details on the maintenance. On the Internet, go to http://www.abb.com/drives and select *Drive Services – Maintenance and Field Services*.

Cooling fan

The life span of the drive's cooling fan depends on the drive usage and ambient temperature.

When the Assistant control panel is in use, the Notice handler assistant informs when the definable value of the operating hour counter is reached (see parameter *2901 COOLING FAN TRIG*). This information can also be passed to the relay output (see group *14 RELAY OUTPUTS*) regardless of the used panel type.

Fan failure can be predicted by the increasing noise from the fan bearings. If the drive is operated in a critical part of a process, fan replacement is recommended once these symptoms start appearing. Replacement fans are available from ABB. Do not use other than ABB specified spare parts.

Replacing the cooling fan (frame sizes R1…R4)

Only frame sizes R1…R4 include a fan; frame size R0 has natural cooling.

WARNING! Read and follow the instructions in chapter *Safety* on page *15*. Ignoring the instructions can cause physical injury or death, or damage to the equipment.

---

1. Stop the drive and disconnect it from the power line. Wait for five minutes to let the drive DC capacitors discharge. Ensure by measuring with a multimeter (impedance at least 1 Mohm) that there is no voltage present.
2. Remove the hood if the drive has the NEMA 1 option.
3. Lever the fan holder off the drive frame with, for example, a screwdriver.
4. Free the fan cable from the clip in the drive frame.
5. Lift the holder from the hinges.

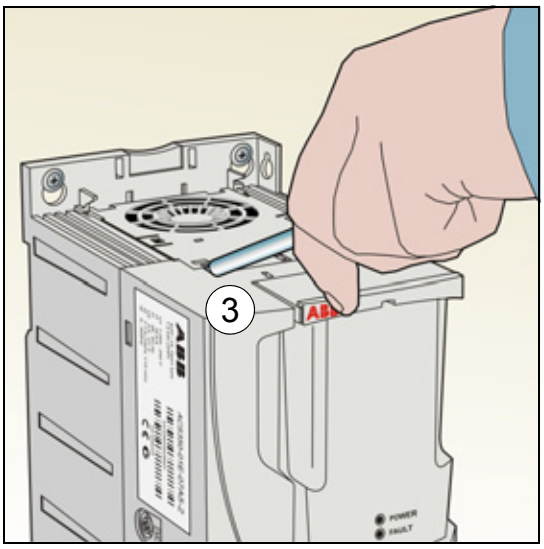

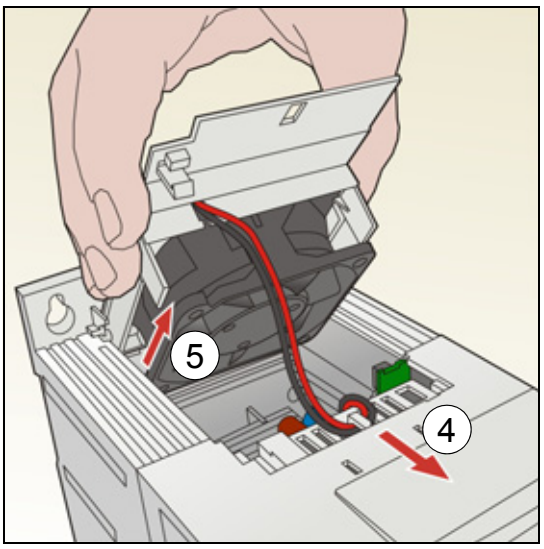

6. Disconnect the fan cable. The figure below on the right shows the location of the fan cable connector in frame size R2. The inside views in different frame sizes are not identical, but the fan cable connector is always on the control board that is against the front of the drive.

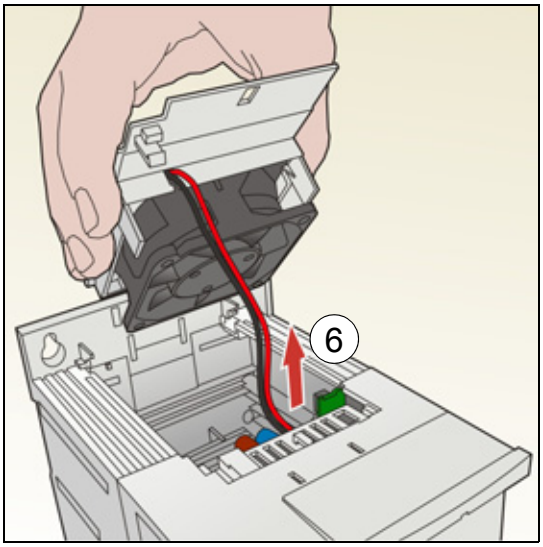

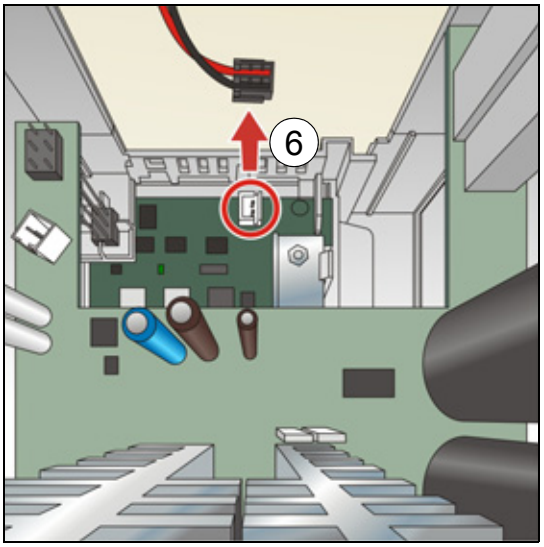

7. Free the fan cable from the clip in the fan holder.
8. Remove the fan from the holder.

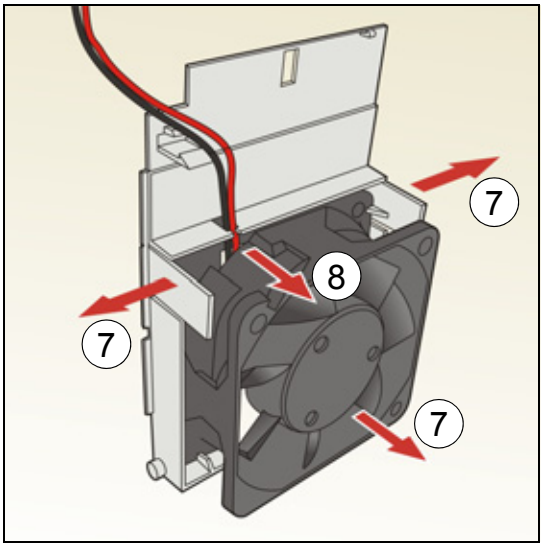

9. Install the new fan in reverse order.
10. Restore power.

Capacitors

Reforming the capacitors

The capacitors must be reformed if the drive has been stored for a year. See section *Type designation label* on page *26* for how to find out the manufacturing time from the serial number. For information on reforming the capacitors, refer to *Guide for capacitor reforming in ACS50, ACS55, ACS150, ACS310, ACS350, ACS355,*

ACS550 and ACH550 (3AFE68735190 [English]), available on the Internet (go to http://www.abb.com and enter the code in the Search field).

Power connections

WARNING! Read and follow the instructions in chapter *Safety* on page *15*. Ignoring the instructions can cause physical injury or death, or damage to the equipment.

1. Stop the drive and disconnect it from the power line. Wait for five minutes to let the drive DC capacitors discharge. Ensure by measuring with a multimeter (impedance at least 1 Mohm) that there is no voltage present.
2. Check the tightness of the power cable connections. Use the tightening torques given in section *Terminal and lead-through data for the power cables* on page *333*.
3. Restore power.

Control panel

Cleaning the control panel

Use a soft damp cloth to clean the control panel. Avoid harsh cleaners which could scratch the display window.

Changing the battery in the Assistant control panel

A battery is only used in Assistant control panels that have the clock function available and enabled. The battery keeps the clock operating in memory during power interruptions.

The expected life for the battery is greater than ten years. To remove the battery, use a coin to rotate the battery holder on the back of the control panel. Replace the battery with type CR2032.

Note: The battery is NOT required for any control panel or drive functions, except the clock.

LEDs

There is a green and a red LED on the front of the drive. They are visible through the panel cover but invisible if a control panel is attached to the drive. The Assistant control panel has one LED. The table below describes the LED indications.

Where	**LED off**	**LED lit and steady**		**LED blinking**	
On the front of the drive. If a control panel is attached to the drive, switch to remote control (otherwise a fault is generated), and then remove the panel to be able to see the LEDs.	No power	Green	Power supply on the board OK	Green	Drive in an alarm state
		Red	Drive in a fault state. To reset the fault, press RESET from the control panel or switch off the drive power.	Red	Drive in a fault state. To reset the fault, switch off the drive power.
At the top left corner of the Assistant control panel	Panel has no power or no drive connection.	Green	Drive in a normal state	Green	Drive in an alarm state
		Red	Drive in a fault state. To reset the fault, press RESET from the control panel or switch off the drive power.	Red	-

16

Technical data

What this chapter contains

The chapter contains the technical specifications of the drive, for example, the ratings, sizes and technical requirements as well as provisions for fulfilling the requirements for CE and other marks.

Ratings

Type	Input	Output					Frame size
ACS310-	I_{1N}	I_{LD}	I_{2N}	I_{2max}	P_N		
x = E/U [1]	A	A	A	A	kW	hp	
1-phase U_N = 200…240 V (200, 208, 220, 230, 240 V)							
01x-02A4-2	6.1	2.3	2.4	4.0	0.37	0.5	R0
01x-04A7-2	11.4	4.5	4.7	7.9	0.75	1	R1
01x-06A7-2	16.1	6.5	6.7	11.4	1.1	1.5	R1
01x-07A5-2	16.8	7.2	7.5	12.6	1.5	2	R2
01x-09A8-2	21.0	9.4	9.8	16.5	2.2	3	R2
3-phase U_N = 200…240 V (200, 208, 220, 230, 240 V)							
03x-02A6-2	4.7	2.4	2.6	4.2	0.37	0.5	R0
03x-03A9-2	6.7	3.5	3.9	6.1	0.55	0.75	R0
03x-05A2-2	8.4	4.7	5.2	8.2	0.75	1	R1
03x-07A4-2	13.0	6.7	7.4	11.7	1.1	1.5	R1
03x-08A3-2	13.2	7.5	8.3	13.1	1.5	2	R1
03x-10A8-2	15.7	9.8	10.8	17.2	2.2	3	R2
03x-14A6-2	23.9	13.3	14.6	23.3	3	3	R2
03x-19A4-2	27.3	17.6	19.4	30.8	4	5	R2
03x-26A8-2	45	24.4	26.8	42.7	5.5	7.5	R3
03x-34A1-2	55	31.0	34.1	54.3	7.5	10	R4
03x-50A8-2	76	46.2	50.8	80.9	11.0	15	R4
3-phase U_N = 380…480 V (380, 400, 415, 440, 460, 480 V)							
03x-01A3-4	2.4	1.2	1.3	2.1	0.37	0.5	R0
03x-02A1-4	4.0	1.9	2.1	3.3	0.55	0.75	R0
03x-02A6-4	4.5	2.4	2.6	4.2	0.75	1	R1
03x-03A6-4	6.6	3.3	3.6	5.8	1.1	1.5	R1
03x-04A5-4	7.6	4.1	4.5	7.2	1.5	2	R1
03x-06A2-4	10.6	5.6	6.2	9.8	2.2	3	R1
03x-08A0-4	12.8	7.3	8.0	12.8	3	3	R1
03x-09A7-4	15.0	8.8	9.7	15.4	4	5	R1
03x-13A8-4	20.7	12.5	13.8	21.9	5.5	7.5	R3
03x-17A2-4	24.3	15.6	17.2	27.3	7.5	10	R3
03x-25A4-4	34.0	23.1	25.4	40.4	11	15	R3
03x-34A1-4	57	31	34.1	54.3	15	20	R4
03x-41A8-4	67	38	41.8	66.5	18.5	25	R4
03x-48A4-4	74	44	48.4	77.0	22.0	30	R4

[1] E = EMC filter connected (metal EMC filter screw installed),
U = EMC filter disconnected (plastic EMC filter screw installed), US parametrization

00578903.xls G

Definitions

I_{1N}	continuous rms input current (for dimensioning cables and fuses) at ambient temperature of +40 °C
I_{LD}	continuous output current at max ambient temperature of +50 °C. 10% overloadability for one minute every ten minutes.
I_{2N}	maximum continuous output current at ambient temperature of +40 °C. No overloadability, derating 1% for every additional 1 °C up to 50 °C.
I_{2max}	maximum instantaneous output current. Available for two seconds every ten minutes at start-up, or as long as allowed by the drive temperature.
P_N	typical motor power. The kilowatt ratings apply to most IEC 4-pole motors. The horsepower ratings apply to most NEMA 4-pole motors.
R0…R4	ACS310 is manufactured in frame sizes R0…R4. Some instructions and other information that only concern certain frame sizes are marked with the symbol of the frame size (R0…R4)

Sizing

Drive sizing is based on the rated motor current and power. To achieve the rated motor power given in the table, the rated current of the drive must be higher than or equal to the rated motor current. The rated power of the drive must also be higher than or equal to compared to the rated motor power. The power ratings are the same regardless of the supply voltage within one voltage range.

Note 1: The maximum allowed motor shaft power is limited to 1.5 · P_N. If the limit is exceeded, motor torque and current are automatically restricted. The function protects the input bridge of the drive against overload.

Note 2: The ratings apply at ambient temperature of 40 °C (104 °F) for I_{2N} and 50 °C (122 °F) for I_{LD}.

In multimotor systems, the drive output current rating I_{LD} must be equal to or greater than the calculated sum of the input currents of all motors.

Derating

I_{2N}: The load capacity decreases if the installation site ambient temperature exceeds 40 °C (104 °F) or if the altitude exceeds 1000 meters (3300 ft) or the switching frequency is changed from 4 kHz to 8, 12 or 16 kHz.

I_{LD}: The load capacity decreases if the altitude exceeds 1000 meters (3300 ft) or the switching frequency is changed from 4 kHz to 8, 12 or 16 kHz.

Temperature derating, I_{2N}

In the temperature range +40 °C…+50 °C (+104 °F…+122 °F), the rated output current (I_{2N}) is decreased by 1% for every additional 1 °C (1.8 °F). The output current is calculated by multiplying the current given in the rating table by the derating factor.

Example: If the ambient temperature is 50 °C (+122 °F), the derating factor is 100% - 1 $\frac{\%}{°C}$ · 10 °C = 90% or 0.90. The output current is then 0.90 · I_{2N}.

Altitude derating, I_{2N} and I_{LD} (= all currents)

In altitudes 1000…2000 m (3300…6600 ft) above sea level, the derating is 1% for every 100 m (330 ft).

Switching frequency derating, I_{2N} and I_{LD} (= all currents)

Derate according to the switching frequency used (see parameter *2606 SWITCHING FREQ*) as follows:

Switching frequency	Drive voltage rating	
	U_N = 200…240 V	U_N = 380…480 V
4 kHz	No derating	No derating
8 kHz	Derate I_{2N} and I_{LD} to 90%.	Derate I_{2N} and I_{LD} to 75% for R0 or to 80% for R1…R4.
12 kHz	Derate I_{2N} and I_{LD} to 80%.	Derate I_{2N} and I_{LD} to 50% for R0 or to 65% for R1…R4 and derate maximum ambient temperature to 30 °C (86 °F).
16 kHz	Derate I_{2N} and I_{LD} to 75%.	Derate I_{2N} and I_{LD} to 50% and derate maximum ambient temperature to 30 °C (86 °F).

Power cable sizes and fuses

Cable dimensioning for rated currents (I_{1N}) is shown in the table below together with the corresponding fuse types for short-circuit protection of the input power cable. **The rated fuse currents given in the table are the maximums for the mentioned fuse types.** If smaller fuse ratings are used, check that the fuse rms current rating is larger than the rated I_{1N} current given in section *Ratings* on page *326*. If 150% output power is needed, multiply current I_{1N} by 1.5. See also section *Selecting the power cables* on page *36*.

Check that the operating time of the fuse is below 0.5 seconds. The operating time depends on the fuse type, the supply network impedance as well as the cross-sectional area, material and length of the supply cable. In case the 0.5 seconds operating time is exceeded with the gG or T fuses, ultra rapid (aR) fuses reduces in most cases the operating time to an acceptable level.

Note: Do not use larger fuses when the input power cable is selected according to the table below.

Type	Fuses		Size of copper conductor in cablings					
ACS310-	gG	UL Class T (600 V)	Supply (U1, V1, W1)		Motor (U2, V2, W2)		PE	
x = E/U	A	A	mm^2	AWG	mm^2	AWG	mm^2	AWG
1-phase U_N = 200…240 V (200, 208, 220, 230, 240 V)								
01x-02A4-2	10	10	2.5	14	0.75	18	2.5	14
01x-04A7-2	16	20	2.5	14	0.75	18	2.5	14
01x-06A7-2	16/20[1)]	25	2.5	10	1.5	14	2.5	10
01x-07A5-2	20/25[1)]	30	2.5	10	1.5	14	2.5	10
01x-09A8-2	25/35[1)]	35	6	10	2.5	12	6	10
3-phase U_N = 200…240 V (200, 208, 220, 230, 240 V)								
03x-02A6-2	10	10	2.5	14	1.5	14	2.5	14
03x-03A9-2	10	10	2.5	14	1.5	14	2.5	14
03x-05A2-2	10	15	2.5	14	1.5	14	2.5	14
03x-07A4-2	16	15	2.5	12	1.5	14	2.5	12
03x-08A3-2	16	15	2.5	12	1.5	14	2.5	12
03x-10A8-2	16	20	2.5	12	2.5	12	2.5	12
03x-14A6-2	25	30	6.0	10	6	10	6.0	10
03x-19A4-2	25	35	6.0	10	6	10	6.0	10
03x-26A8-2	63	60	10.0	8	10	8	10.0	8
03x-34A1-2	80	80	16.0	6	16	6	16.0	6
03x-50A8-2	100	100	25.0	2	25	2	16.0	4
3-phase U_N = 380…480 V (380, 400, 415, 440, 460, 480 V)								
03x-01A3-4	10	10	2.5	14	1.5	14	2.5	14
03x-02A1-4	10	10	2.5	14	1.5	14	2.5	14
03x-02A6-4	10	10	2.5	14	1.5	14	2.5	14
03x-03A6-4	10	10	2.5	12	1.5	14	2.5	12
03x-04A5-4	16	15	2.5	12	1.5	14	2.5	12
03x-06A2-4	16	15	2.5	12	1.5	14	2.5	12
03x-08A0-4	16	20	2.5	12	1.5	14	2.5	12
03x-09A7-4	20	25	2.5	12	2.5	12	2.5	12
03x-13A8-4	25	30	6.0	10	6	10	6.0	10

Type	Fuses		Size of copper conductor in cablings					
ACS310-	gG	UL Class T (600 V)	Supply (U1, V1, W1)		Motor (U2, V2, W2)		PE	
x = E/U	A	A	mm^2	AWG	mm^2	AWG	mm^2	AWG
03x-17A2-4	35	35	6.0	8	6	8	6.0	8
03x-25A4-4	50	50	10.0	8	10	8	10.0	8
03x-34A1-4	80	80	16.0	6	16	6	16.0	6
03x-41A8-4	100	100	25.0	4	16	4	16.0	4
03x-48A4-4	100	100	25.0	4	25	4	16.0	4

[1] If 50% overload capacity is needed, use the larger fuse alternative.

00578903.xls G

Dimensions, weights and free space requirements

Dimensions and weights

Frame size	Dimensions and weights											
	IP20 (cabinet) / UL open											
	H1		H2		H3		W		D		Weight	
	mm	in	mm	in	mm	in	mm	in	mm	in	kg	lb
R0	169	6.65	202	7.95	239	9.41	70	2.76	161	6.34	1.2	2.6
R1	169	6.65	202	7.95	239	9.41	70	2.76	161	6.34	1.4	3.1
R2	169	6.65	202	7.95	239	9.41	105	4.13	165	6.50	1.8	4.0
R3	169	6.65	202	7.95	236	9.29	169	6.65	169	6.65	2.9	6.4
R4	181	7.13	202	7.95	244	9.61	260	10.24	169	6.65	5.1	11.2

00578903.xls G

Frame size	Dimensions and weights									
	IP20 / NEMA 1									
	H4		H5		W		D		Weight	
	mm	in	mm	in	mm	in	mm	in	kg	lb
R0	257	10.12	280	11.02	70	2.76	169	6.65	1.6	3.5
R1	257	10.12	280	11.02	70	2.76	169	6.65	1.8	4.0
R2	257	10.12	282	11.10	105	4.13	169	6.65	2.2	4.9
R3	260	10.24	299	11.77	169	6.65	177	6.97	3.5	7.7
R4	270	10.63	320	12.60	260	10.24	177	6.97	5.7	12.6

00578903.xls G

Symbols

IP20 (cabinet) / UL open

H1 height without fastenings and clamping plate

H2 height with fastenings, without clamping plate

H3 height with fastenings and clamping plate

IP20 / NEMA 1

H4 height with fastenings and connection box

H5 height with fastenings, connection box and hood

Free space requirements

Frame size	Free space required					
	Above		Below		On the sides	
	mm	in	mm	in	mm	in
R0…R4	75	3	75	3	0	0

00578903.xls G

Losses, cooling data and noise

Losses and cooling data

Frame size R0 has natural convection cooling. Frame sizes R1…R4 are provided with an internal fan. The air flow direction is from bottom to top.

The table below specifies the heat dissipation in the main circuit at nominal load and in the control circuit with minimum load (I/O and panel not in use) and maximum load (all digital inputs in the on state and the panel, fieldbus and fan in use). The total heat dissipation is the sum of the heat dissipation in the main and control circuits.

Type	Heat dissipation						Air flow	
ACS310-	Main circuit		Control circuit					
x = E/U	Rated I_{LD}		Min		Max			
	W	BTU/Hr	W	BTU/Hr	W	BTU/Hr	m^3/h	ft^3/min
1-phase U_N = 200…240 V (200, 208, 220, 230, 240 V)								
01x-02A4-2	19	65	6.1	21	22.7	78	-	-
01x-04A7-2	38	130	9.5	32	26.4	90	24	14
01x-06A7-2	60	205	9.5	32	26.4	90	24	14
01x-07A5-2	62	212	11	36	27.5	94	21	12
01x-09A8-2	83	283	11	36	27.5	94	21	12
3-phase U_N = 200…240 V (200, 208, 220, 230, 240 V								
03x-02A6-2	19	65	6.1	21	23	78	-	-
03x-03A9-2	31	106	6.1	21	23	78	-	-
03x-05A2-2	38	130	9.5	32	26	90	24	14
03x-07A4-2	60	205	9.5	32	26	90	24	14
03x-08A3-2	62	212	9.5	32	26	90	21	12
03x-10A8-2	83	283	11	36	28	94	21	12
03x-14A6-2	112	383	11	36	28	94	52	31
03x-19A4-2	152	519	11	36	28	94	52	31
03x-26A8-2	250	854	17	57	35	120	71	42
03x-34A1-2	270	922	33	110	58	200	96	57
03x-50A8-2	430	1469	33	110	58	200	96	57
3-phase U_N = 380…480 V (380, 400, 415, 440, 460, 480 V)								
03x-01A3-4	11	38	6.6	23	24	83	-	-
03x-02A1-4	16	55	6.6	23	24	83	-	-
03x-02A6-4	21	72	9.8	33	29	98	13	8
03x-03A6-4	31	106	9.8	33	29	98	13	8
03x-04A5-4	40	137	9.8	33	29	98	13	8
03x-06A2-4	61	208	9.8	33	29	98	19	11
03x-08A0-4	74	253	14	48	33	110	24	14
03x-09A7-4	94	321	14	48	33	110	24	14
03x-13A8-4	130	444	12	41	31	110	52	31

Type	Heat dissipation						Air flow	
ACS310-	Main circuit		Control circuit					
x = E/U	Rated I_{LD}		Min		Max			
	W	BTU/Hr	W	BTU/Hr	W	BTU/Hr	m^3/h	ft^3/min
03x-17A2-4	173	591	12	41	31	110	52	31
03x-25A4-4	266	908	17	57	35	120	71	42
03x-34A1-4	350	1195	33	110	58	200	96	57
03x-41A8-4	440	1503	33	110	58	200	96	57
03x-48A4-4	530	1810	33	110	58	200	96	57

00578903.xls G

Noise

Frame size	Noise level
	dBA
R0	<30
R1	50…62
R2	50…62
R3	50…62
R4	<62

00578903.xls D

Terminal and lead-through data for the power cables

Frame size	Max. cable diameter for NEMA 1		U1, V1, W1, U2, V2, W2				PE			
	U1, V1, W1, U2, V2, W2		Max. terminal size flexible/rigid		Tightening torque		Max. clamp size solid or stranded		Tightening torque	
	mm	in	mm^2	AWG	N·m	lbf·in	mm^2	AWG	N·m	lbf·in
R0	16	0.63	4.0/6.0	10	0.8	7	25	3	1.2	11
R1	16	0.63	4.0/6.0	10	0.8	7	25	3	1.2	11
R2	16	0.63	4.0/6.0	10	0.8	7	25	3	1.2	11
R3	29	1.14	10.0/16.0	6	1.7	15	25	3	1.2	11
R4	35	1.38	25.0/35.0	2	2.5	22	25	3	1.2	11

00578903.xls G

Terminal and lead-through data for the control cables

Conductor size						Tightening torque	
Solid or stranded		Stranded, with ferrule without plastic sleeve		Stranded, with ferrule with plastic sleeve			
Min/Max	Min/Max	Min/Max	Min/Max	Min/Max	Min/Max		
mm^2	AWG	mm^2	AWG	mm^2	AWG	N·m	lbf·in
0.14/1.5	26/16	0.25/1.5	23/16	0.25/1.5	23/16	0.4	3.5

Electric power network specification

Voltage (U_1)	200/208/220/230/240 V AC 1-phase for 200 V AC drives 200/208/220/230/240 V AC 3-phase for 200 V AC drives 380/400/415/440/460/480 V AC 3-phase for 400 V AC drives ±10% variation from converter nominal voltage is allowed as default.
Short-circuit capacity	Maximum allowed prospective short-circuit current at the input power connection as defined in IEC 60439-1 is 100 kA. The drive is suitable for use in a circuit capable of delivering not more than 100 kA rms symmetrical amperes at the drive maximum rated voltage.
Frequency	50/60 Hz ± 5%, maximum rate of change 17%/s
Imbalance	Max. ±3% of nominal phase to phase input voltage

Motor connection data

Motor type	AC induction motor
Voltage (U_2)	0 to U_1, 3-phase symmetrical, U_{max} at the field weakening point
Short-circuit protection (IEC 61800-5-1, UL 508C)	The motor output is short-circuit proof by IEC 61800-5-1 and UL 508C.
Frequency	0…500 Hz
Frequency resolution	0.01 Hz
Current	See section *Ratings* on page *326*.
Power limit	$1.5 \cdot P_N$
Field weakening point	10…500 Hz
Switching frequency	4, 8, 12 or 16 kHz
Maximum recommended motor cable length	**Operational functionality and motor cable length** The drive is designed to operate with optimum performance with the following maximum motor cable lengths. The motor cable lengths may be extended with output chokes as shown in the table.

Frame size	Maximum motor cable length	
	m	ft
Standard drive, without external options		
R0	30	100
R1…R4	50	165
With external output chokes		
R0	60	195
R1…R4	100	330

EMC compatibility and motor cable length

To comply with the European EMC Directive (standard IEC/ EN 61800-3), use the following maximum motor cable lengths for 4 kHz switching frequency.

All frame sizes	Maximum motor cable length, 4 kHz	
	m	ft
With internal EMC filter		
Second environment (category C3 [1])	30	100
First environment (category C2 [1])	-	-
First environment (category C1 [1])	-	-
With optional external EMC filter		
Second environment (category C3 [1])	30 (at least) [2]	100 (at least) [2]
First environment (category C2 [1])	30 (at least) [2]	100 (at least) [2]
First environment (category C1 [1])	10 (at least) [2]	30 (at least) [2]

[1] See the terms in section *Definitions* on page *339*.

[2] Maximum motor cable length is determined by the drive's operational factors. Contact your local ABB representative for the exact maximum lengths when using external EMC filters.

Note: The internal EMC filter must be disconnected by removing the EMC screw (see the figure on page *46*) while using the low leakage current EMC filter (LRFI-XX).

Note: Radiated emissions are according to C2 with and without an external EMC filter.

Note: Category C1 with conducted emissions only. Radiated emissions are not compatible when measured with standard emission measurement setup and should be checked or measured on cabinet and machine installations case by case.

Note: In multimotor systems, the calculated sum of all motor cable lengths must not exceed the maximum motor cable length given in the table.

Note: The external EMC filter must be installed onto a metal plate to ensure efficient cooling.

Control connection data

Analog inputs X1A: 2 and 5	Voltage signal,	unipolar	0 (2)…10 V, R_{in} > 312 kohm
		bipolar	-10…10 V, R_{in} > 312 kohm
	Current signal,	unipolar	0 (4)…20 mA, R_{in} = 100 ohm
		bipolar	-20…20 mA, R_{in} = 100 ohm
	Potentiometer reference value (X1A: 4)		10 V ± 1%, max. 10 mA, *R* < 10 kohm
	Resolution		0.1%
	Accuracy		±1%
Analog output X1A: 7			0 (4)…20 mA, load < 500 ohm
Auxiliary voltage X1A: 9			24 V DC ± 10%, max. 200 mA
Digital inputs X1A: 12…16 (frequency input X1A: 16)	Voltage		12…24 V DC with internal or external supply
	Type		PNP and NPN
	Frequency input		Pulse train 0…16 kHz (X1A: 16 only)
	Input impedance		2.4 kohm
Relay output X1B: 17…19	Type		NO + NC
	Max. switching voltage		250 V AC / 30 V DC
	Max. switching current		0.5 A / 30 V DC; 5 A / 230 V AC
	Max. continuous current		2 A rms
Digital output X1B: 20…21	Type		Transistor output PNP
	Max. switching voltage		30 V DC
	Max. switching current		100 mA / 30 V DC, short-circuit protected
	Frequency		10 Hz …16 kHz
	Resolution		1 Hz
	Accuracy		0.2%
EIA-485 interface X1C: 23…26	Cable		Shielded twisted pair, impedance 100…150 ohm
	Termination		Daisy-chained bus, without drop lines
	Isolation		Bus interface isolated from the drive
	Transfer rate		1.2…76.8 kbit/s
	Communication type		Serial, asynchronous, half duplex
	Protocol		Modbus

Clearance and creepage distance

The clearance and creepage distance between I/O connections and mains circuit is 5.5 mm, which guarantees safety insulation of overvoltage category 3 (IEC 60664-1).

Efficiency

Approximately 95 to 98% at nominal power level, depending on the drive size and options

Degrees of protection

IP20 (cabinet installation) / UL open: Standard enclosure. The drive must be installed in a cabinet to fulfil the requirements for shielding from contact.

IP20 / NEMA 1: Achieved with an option kit including a hood and a connection box.

Ambient conditions

Environmental limits for the drive are given below. The drive is to be used in a heated indoor controlled environment.

	Operation installed for stationary use	**Storage** in the protective package	**Transportation** in the protective package
Installation site altitude	0 to 2000 m (6600 ft) above sea level (above 1000 m [3300 ft], see section *Derating* on page *327*)	-	-
Air temperature	-10 to +50 °C (14 to 122 °F). No frost allowed. See section *Derating* on page *327*.	-40 to +70 °C (-40 to +158 °F)	-40 to +70 °C (-40 to +158 °F)
Relative humidity	0 to 95%	Max. 95%	Max. 95%
	No condensation allowed. Maximum allowed relative humidity is 60% in the presence of corrosive gases.		
Contamination levels (IEC 60721-3-3, IEC 60721-3-2, IEC 60721-3-1)	No conductive dust allowed.		
	According to IEC 60721-3-3, chemical gases: Class 3C2 solid particles: Class 3S2. **Note:** The drive must be installed in clean air according to enclosure classification. **Note:** Cooling air must be clean, free from corrosive materials and electrically conductive dust.	According to IEC 60721-3-1, chemical gases: Class 1C2 solid particles: Class 1S2	According to IEC 60721-3-2, chemical gases: Class 2C2 solid particles: Class 2S2
Sinusoidal vibration (IEC 60721-3-3)	Tested according to IEC 60721-3-3, mechanical conditions: Class 3M4 2…9 Hz, 3.0 mm (0.12 in) 9…200 Hz, 10 m/s^2 (33 ft/s^2)	-	-
Shock (IEC 60068-2-27, ISTA 1A)	Not allowed during operation.	According to ISTA 1A. Max. 100 m/s^2 (330 ft/s^2), 11 ms.	According to ISTA 1A. Max. 100 m/s^2 (330 ft/s^2), 11 ms.
Free fall	Not allowed	76 cm (30 in)	76 cm (30 in)

Materials

Drive enclosure	• PC/ABS 2 mm, PC+10%GF 2.5…3 mm and PA66+25%GF 1.5 mm, all in color NCS 1502-Y (RAL 9002 / PMS 420 C) • hot-dip zinc coated steel sheet 1.5 mm, thickness of coating 20 micrometers • extruded aluminium AlSi.
Package	Corrugated cardboard.
Disposal	The drive contains raw materials that should be recycled to preserve energy and natural resources. The package materials are environmentally compatible and recyclable. All metal parts can be recycled. The plastic parts can either be recycled or burned under controlled circumstances, according to local regulations. Most recyclable parts are marked with recycling marks. If recycling is not feasible, all parts excluding electrolytic capacitors and printed circuit boards can be landfilled. The DC capacitors contain electrolyte, which is classified as hazardous waste within the EU. They must be removed and handled according to local regulations. For further information on environmental aspects and more detailed recycling instructions, please contact your local ABB distributor.

Applicable standards

	The drive complies with the following standards:
• **IEC/EN 61800-5-1: 2003**	Electrical, thermal and functional safety requirements for adjustable frequency a.c. power drives
• **IEC/EN 60204-1: 2006**	Safety of machinery. Electrical equipment of machines. Part 1: General requirements. *Provisions for compliance:* The final assembler of the machine is responsible for installing - an emergency-stop device - a supply disconnecting device.
• **IEC/EN 61800-3: 2004**	Adjustable speed electrical power drive systems. Part 3: EMC requirements and specific test methods
• **UL 508C**	UL Standard for Safety, Power Conversion Equipment, third edition

CE marking

The CE mark is attached to the drive to verify that the drive follows the provisions of the European Low Voltage and EMC Directives.

Compliance with the European EMC Directive

The EMC Directive defines the requirements for immunity and emissions of electrical equipment used within the European Union. The EMC product standard (EN 61800-3:2004) covers requirements stated for drives. See section *Compliance with EN 61800-3:2004* on page *339*.

Compliance with EN 61800-3:2004

Definitions

EMC stands for **E**lectro**m**agnetic **C**ompatibility. It is the ability of electrical/electronic equipment to operate without problems within an electromagnetic environment. Likewise, the equipment must not disturb or interfere with any other product or system within its locality.

First environment includes establishments connected to a low-voltage network which supplies buildings used for domestic purposes.

Second environment includes establishments connected to a network not directly supplying domestic premises.

Drive of category C1: drive of rated voltage less than 1000 V, intended for use in the first environment.

Drive of category C2: drive of rated voltage less than 1000 V and intended to be installed and commissioned only by a professional when used in the first environment.

Note: A professional is a person or organization having necessary skills in installing and/or commissioning power drive systems, including their EMC aspects.

Category C2 has the same EMC emission limits as the earlier class first environment restricted distribution. EMC standard IEC/EN 61800-3 does not any more restrict the distribution of the drive, but the using, installation and commissioning are defined.

Drive of category C3: drive of rated voltage less than 1000 V, intended for use in the second environment and not intended for use in the first environment.

Category C3 has the same EMC emission limits as the earlier class second environment unrestricted distribution.

Category C1

The emission limits are complied with the following provisions:

1. The optional EMC filter is selected according to the ABB documentation and installed as specified in the EMC filter manual.
2. The motor and control cables are selected as specified in this manual.
3. The drive is installed according to the instructions given in this manual.
4. For the maximum motor cable length with 4 kHz switching frequency, see page *335*.

WARNING! In a domestic environment, this product may cause radio inference, in which case supplementary mitigation measures may be required.

Category C2

The emission limits are complied with the following provisions:

1. The optional EMC filter is selected according to the ABB documentation and installed as specified in the EMC filter manual.
2. The motor and control cables are selected as specified in this manual.
3. The drive is installed according to the instructions given in this manual.
4. For the maximum motor cable length with 4 kHz switching frequency, see page *335*.

WARNING! In a domestic environment, this product may cause radio inference, in which case supplementary mitigation measures may be required.

Category C3

The immunity performance of the drive complies with the demands of IEC/EN 61800-3, second environment (see page *339* for IEC/EN 61800-3 definitions).

The emission limits are complied with the following provisions:

1. The internal EMC filter is connected (the metal screw at EMC is in place) or the optional EMC filter is installed.
2. The motor and control cables are selected as specified in this manual.
3. The drive is installed according to the instructions given in this manual.
4. With the internal EMC filter: motor cable length 30 m (100 ft) with 4 kHz switching frequency. For the maximum motor cable length with an optional external EMC filter, see page *335*.

WARNING! A drive of category C3 is not intended to be used on a low-voltage public network which supplies domestic premises. Radio frequency interference is expected if the drive is used on such a network.

Note: It is not allowed to install a drive with the internal EMC filter connected on IT (ungrounded) systems. The supply network becomes connected to ground potential through the EMC filter capacitors which may cause danger or damage the drive.

Note: It is not allowed to install a drive with the internal EMC filter connected on a corner-grounded TN system as this would damage the drive.

UL marking

See the type designation label for the valid markings of your drive.

The UL mark is attached to the drive to verify that it meets UL requirements.

UL checklist

Input power connection – See section *Electric power network specification* on page *334*.

Disconnecting device (disconnecting means) – See *Selecting the supply disconnecting device (disconnecting means)* on page *35*.

Ambient conditions – The drives are to be used in a heated indoor controlled environment. See section *Ambient conditions* on page *337* for specific limits.

Input cable fuses – For installation in the United States, branch circuit protection must be provided in accordance with the National Electrical Code (NEC) and any applicable local codes. To fulfil this requirement, use the UL classified fuses given in section *Power cable sizes and fuses* on page *329*.

For installation in Canada, branch circuit protection must be provided in accordance with Canadian Electrical Code and any applicable provincial codes. To fulfil this requirement, use the UL classified fuses given in section *Power cable sizes and fuses* on page *329*.

Power cable selection – See section *Selecting the power cables* on page *36*.

Power cable connections – For the connection diagram and tightening torques, see section *Connecting the power cables* on page *47*.

Overload protection – The drive provides overload protection in accordance with the National Electrical Code (US).

C-Tick marking

See the type designation label for the valid markings of your drive.

C-Tick marking is required in Australia and New Zealand. A C-Tick mark is attached to the drive to verify compliance with the relevant standard (IEC 61800-3:2004 – Adjustable speed electrical power drive systems – Part 3: EMC product standard including specific test methods), mandated by the Trans-Tasman Electromagnetic Compatibility Scheme.

The Trans-Tasman Electromagnetic Compatibility Scheme (EMCS) was introduced by the Australian Communication Authority (ACA) and the Radio Spectrum Management Group (RSM) of the New Zealand Ministry of Economic Development

(NZMED) in November 2001. The aim of the scheme is to protect the radio frequency spectrum by introducing technical limits for emission from electrical/electronic products.

For fulfilling the requirements of the standard, see section *Compliance with EN 61800-3:2004* on page *339*.

RoHS marking

The RoHS mark is attached to the drive to verify that drive follows the provisions of the European RoHS Directive. RoHS = the restriction of the use of certain hazardous substances in electrical and electronic equipment.

Declaration of incorporation

ABB

Declaration of Incorporation

(According to Machinery Directive 2006/42/EC)

Manufacturer: ABB Oy
Address: P.O Box 184, FIN-00381 Helsinki, Finland. Street address: Hiomotie 13,

herewith declare under our sole responsibility that the frequency converters with type markings:

ACS310-...

are intended to be incorporated into machinery or to be assembled with other machinery to constitute machinery covered by Machinery Directive 2006/42/EC and relevant essential health and safety requirements of the Directive and its Annex I have been complied with.

The technical documentation is compiled in accordance with part B of Annex VII, the assembly instructions are prepared according Annex VI and the following harmonised European standard has been applied:

EN 60204-1:2006 + A1:2009
Safety of machinery - Electrical equipment of machines- Part 1: general requirements

and that the following technical standard have been used:

EN 60529 (1991 + corrigendum May 1993 + amendment A1:2000)
Degrees of protection provided by enclosures (IP codes)

The person authorized to compile the technical documentation:

Name: Jukka Päri
Address: P.O Box 184, FIN-00381 Helsinki

The products referred in this Declaration of Incorporation are in conformity with Low voltage directive 2006/95/EC and EMC directive 2004/108/EC. The Declaration of Conformity according to these directives is available from the manufacturer.

ABB Oy furthermore declares that it is not allowed to put the equipment into service until the machinery into which it is to be incorporated or of which it is to be a component has been found and declared to be in conformity with the provisions of the Directive 2006/42/EC and with national implementing legislation, i.e. as a whole, including the equipment referred to in this Declaration.

ABB Oy gives an undertaking to the national authorities to transmit, in response to a reasoned request by the national authorities, relevant information on the partly completed machinery. The method of transmission can be either electrical or paper format and it shall be agreed with the national authority when the information is asked. This transmission of information shall be without prejudice to the intellectual property rights of the manufacturer.

Helsinki, 29.12.2009

Panu Virolainen

Vice President
ABB Oy, BAU Drives

17

Dimension drawings

Dimension drawings of the ACS310 are shown below. The dimensions are given in millimeters and [inches].

Frame sizes R0 and R1, IP20 (cabinet installation) / UL open

R1 and R0 are identical except for the fan at the top of R1.

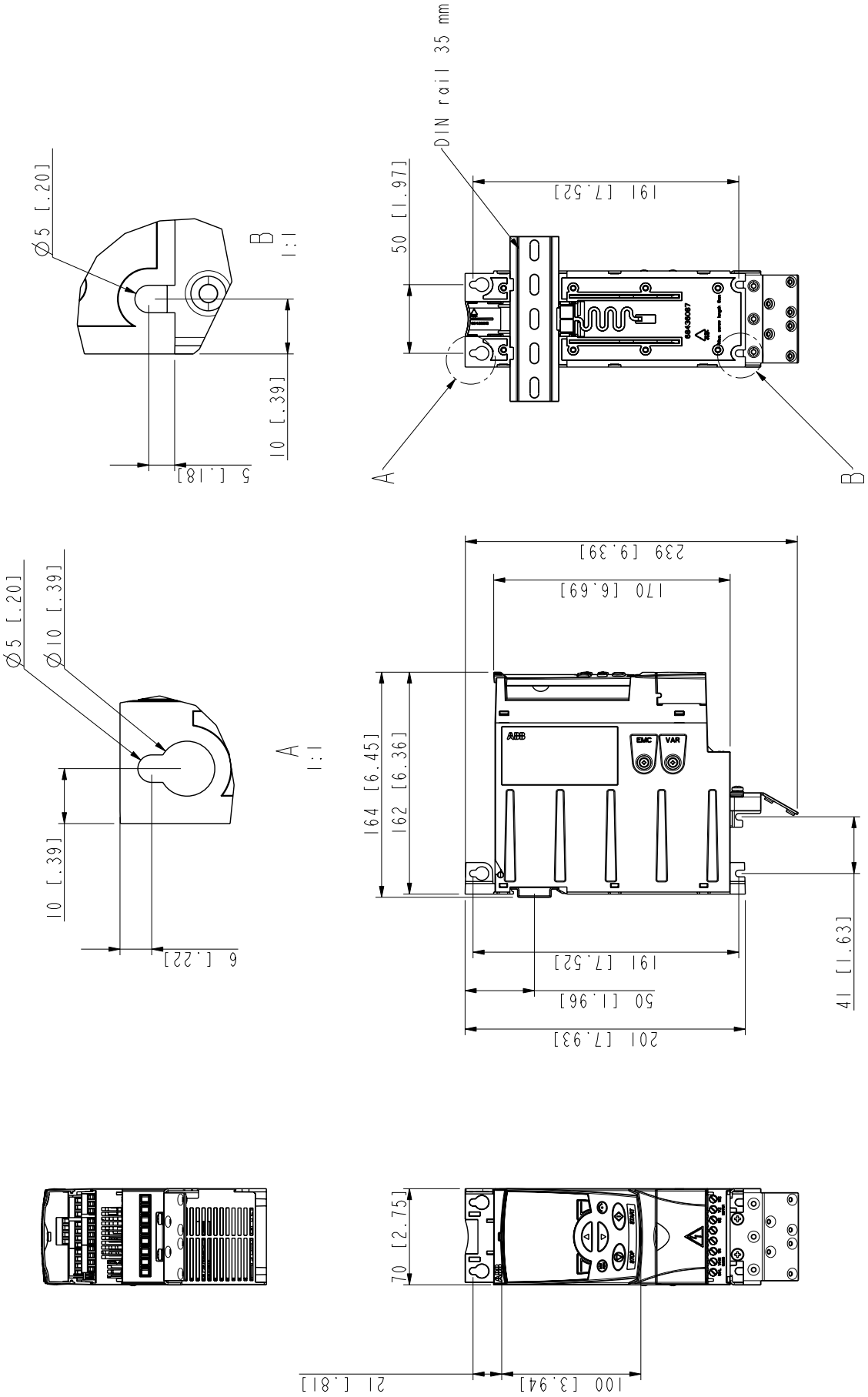

Frame sizes R0 and R1, IP20 (cabinet installation) / UL open

3AUA0000050967-A

Frame sizes R0 and R1, IP20 / NEMA 1

R1 and R0 are identical except for the fan at the top of R1.

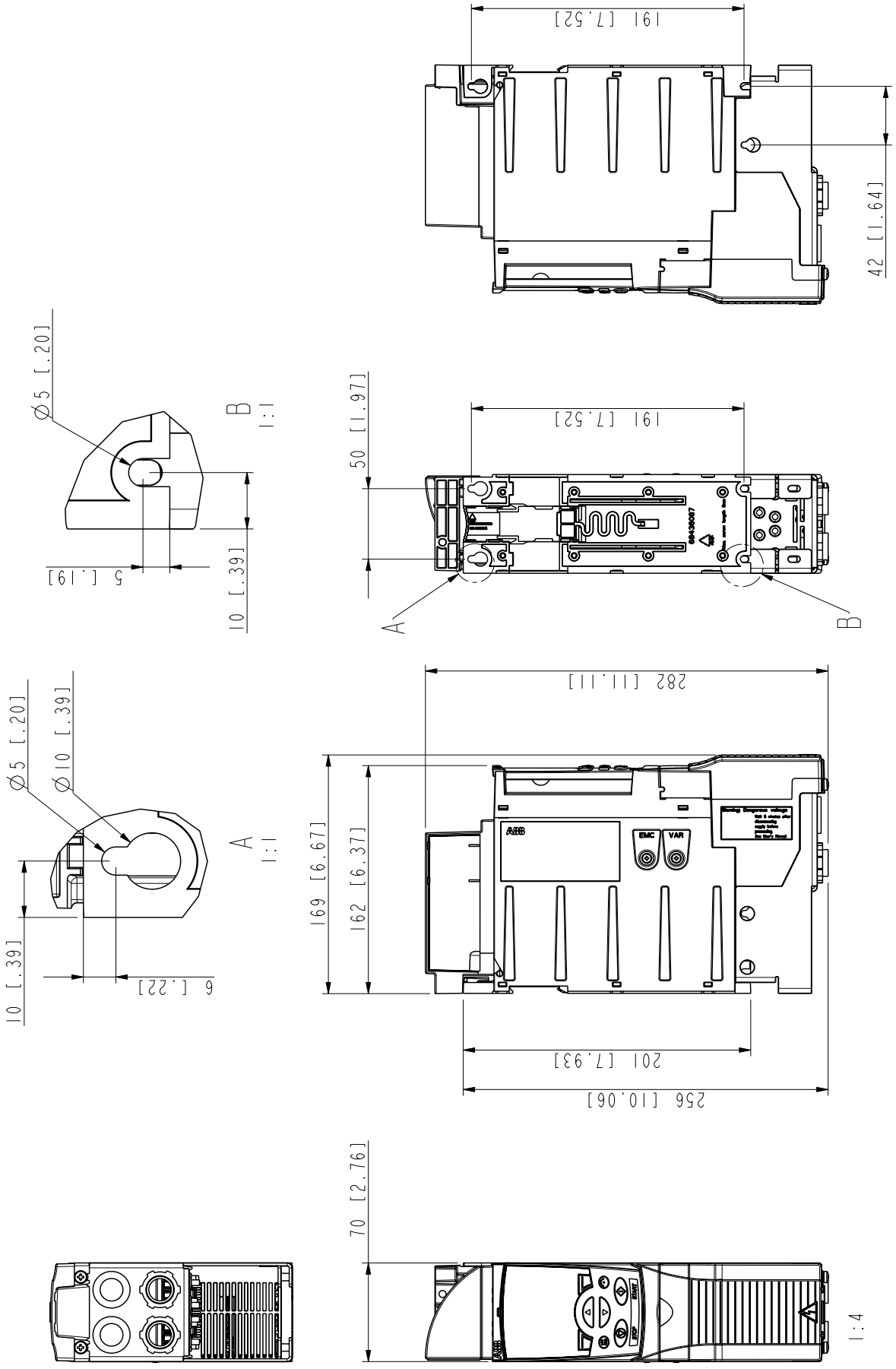

Frame sizes R0 and R1, IP20 / NEMA 1

3AUA0000051086-A

Frame size R2, IP20 (cabinet installation) / UL open

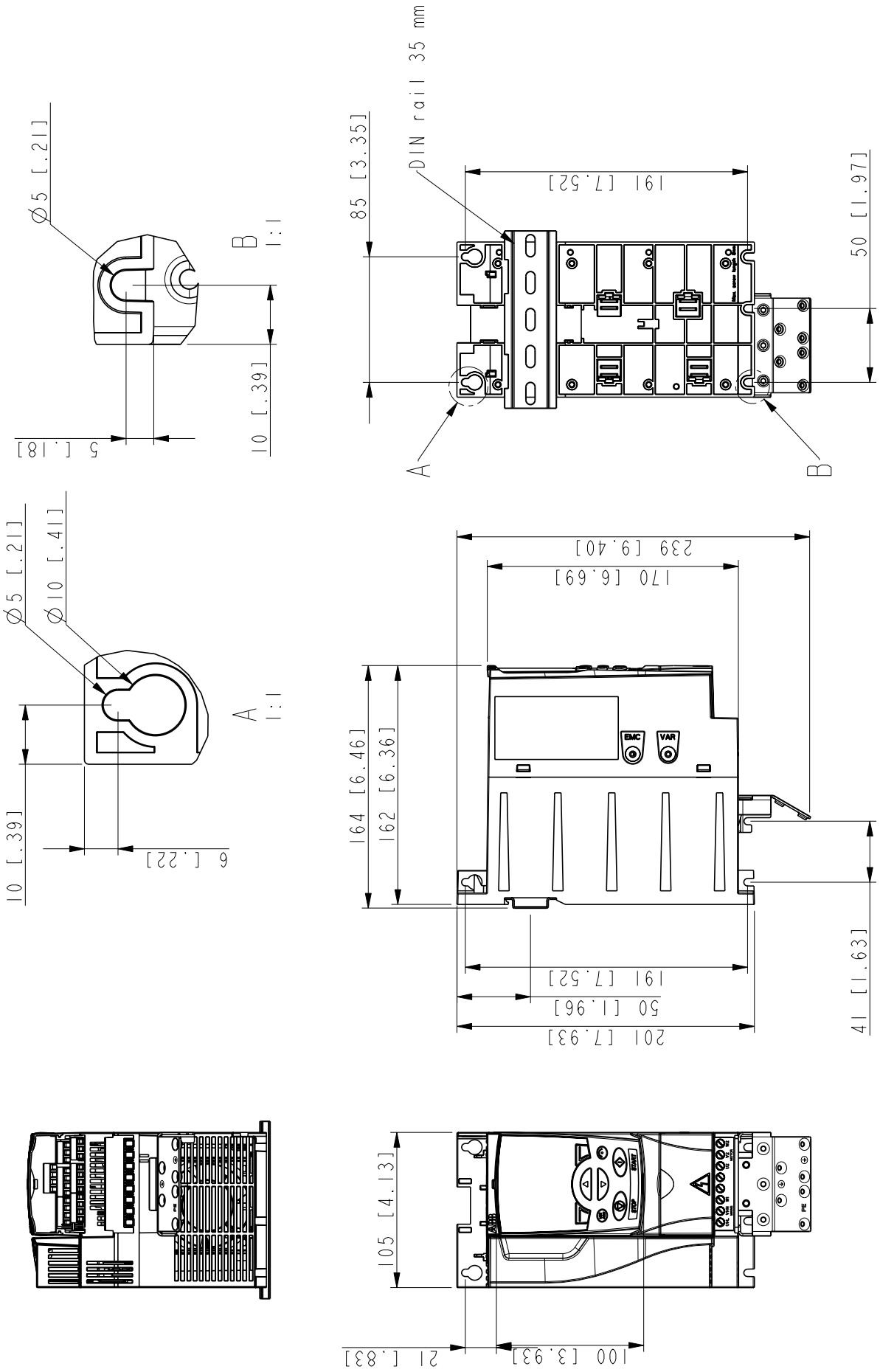

Frame size R2, IP20 (cabinet installation) / UL open

3AUA0000051090-A

Frame size R2, NEMA 1

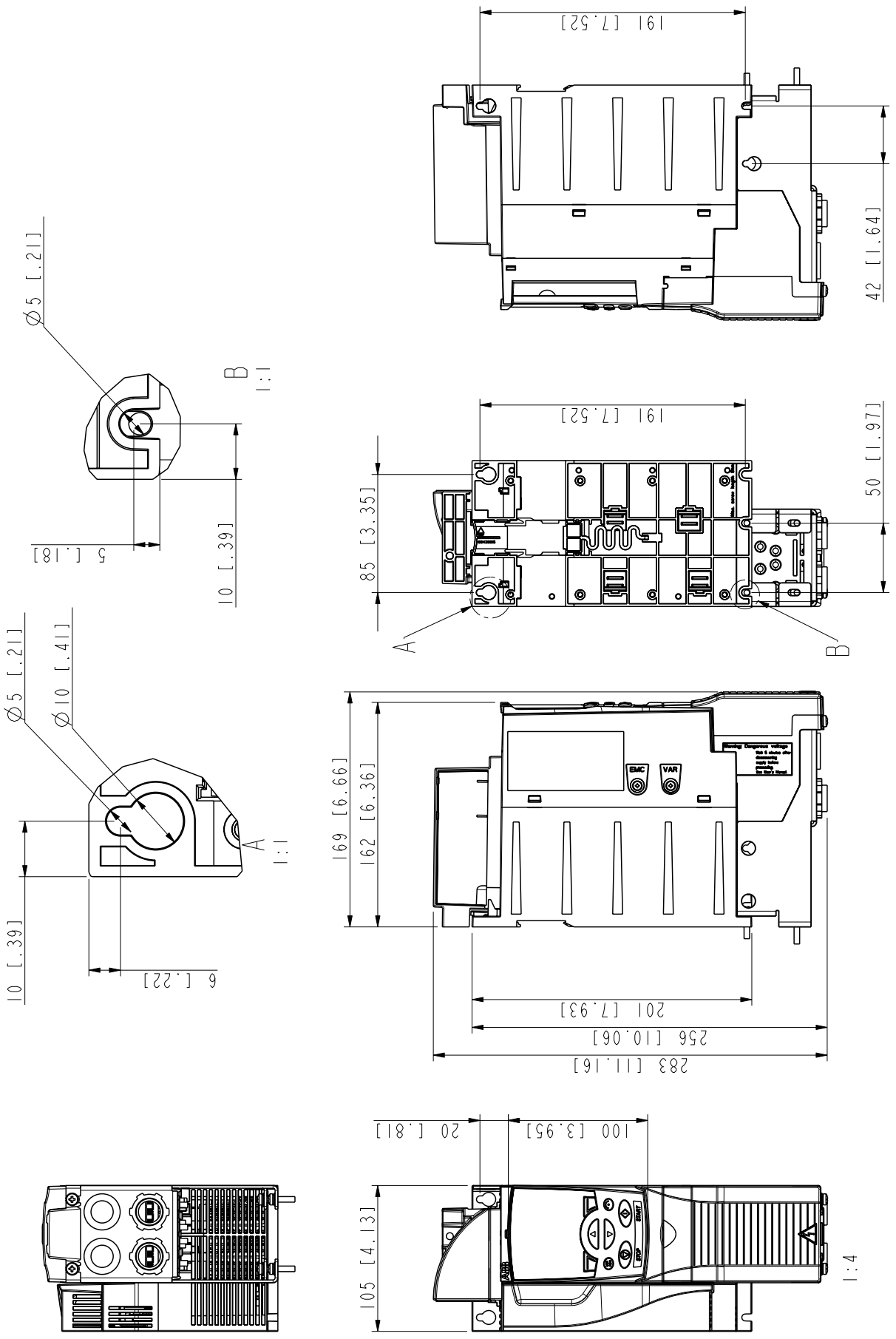

Frame size R2, IP20 / NEMA 1

3AUA0000051097-A

Frame size R3, IP20 (cabinet installation) / UL open

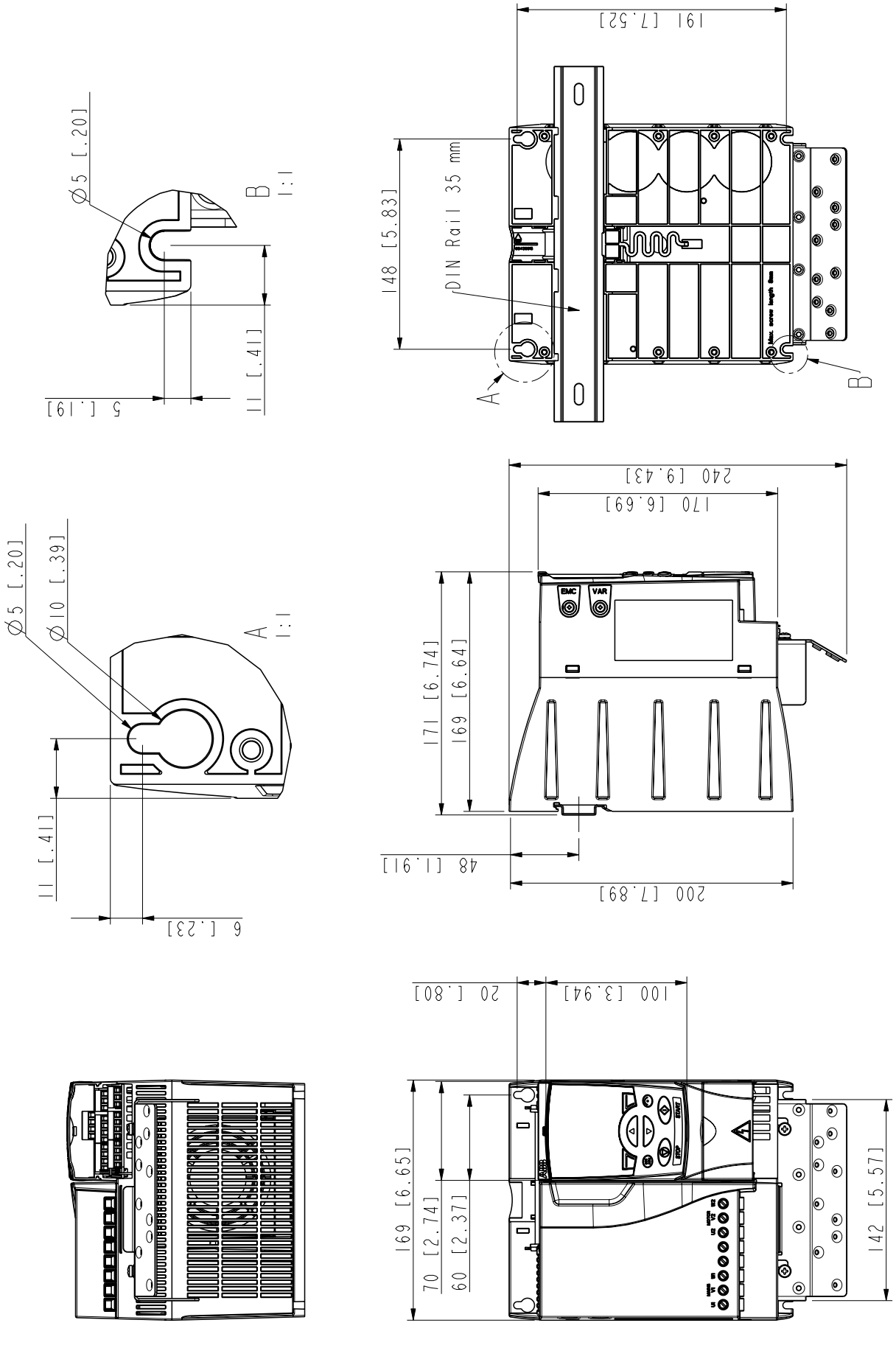

Frame size R3, NEMA 1

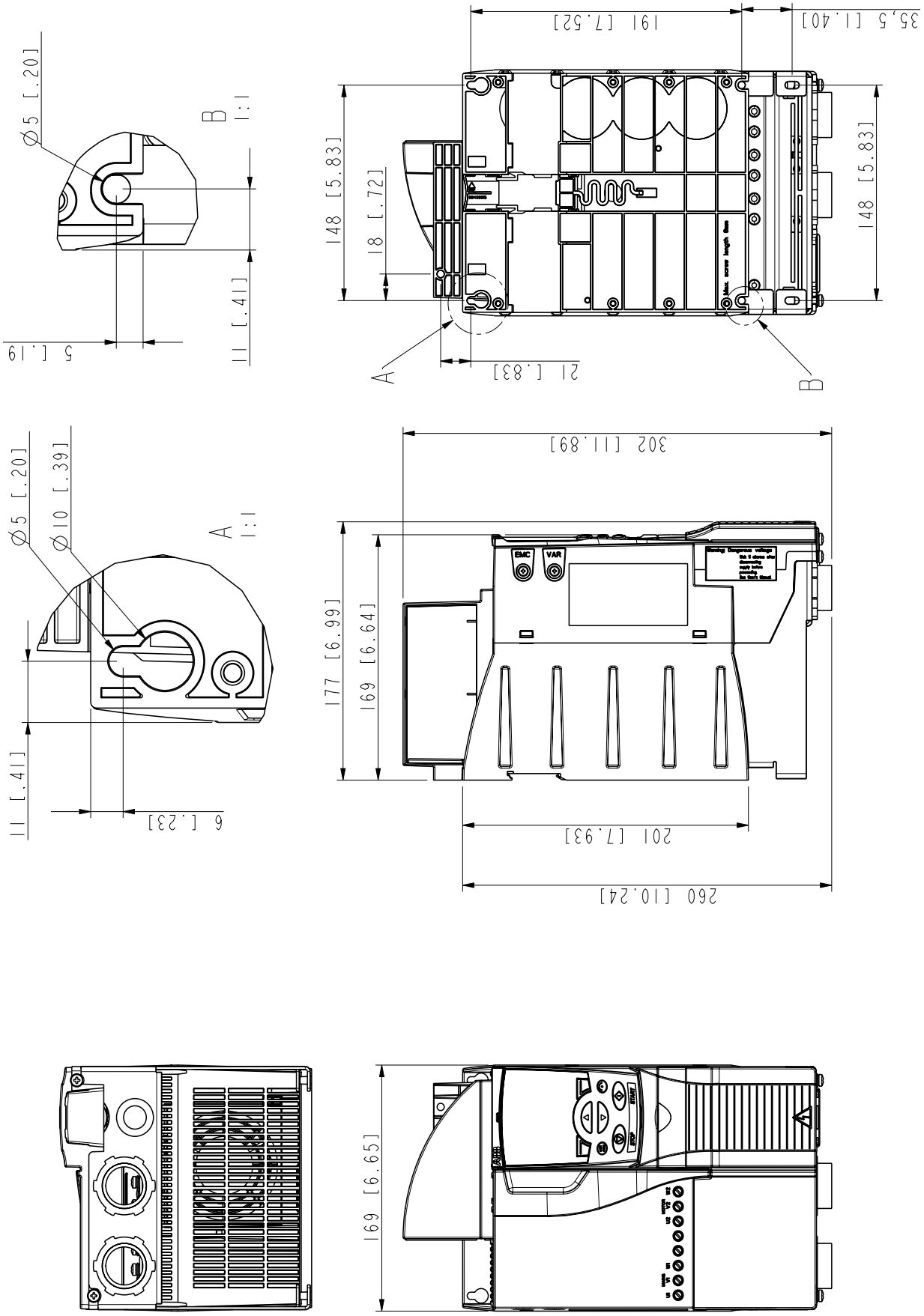

Frame size R3, IP20 / NEMA 1

3AUA0000051118-A

Frame size R4, IP20 (cabinet installation) / UL open

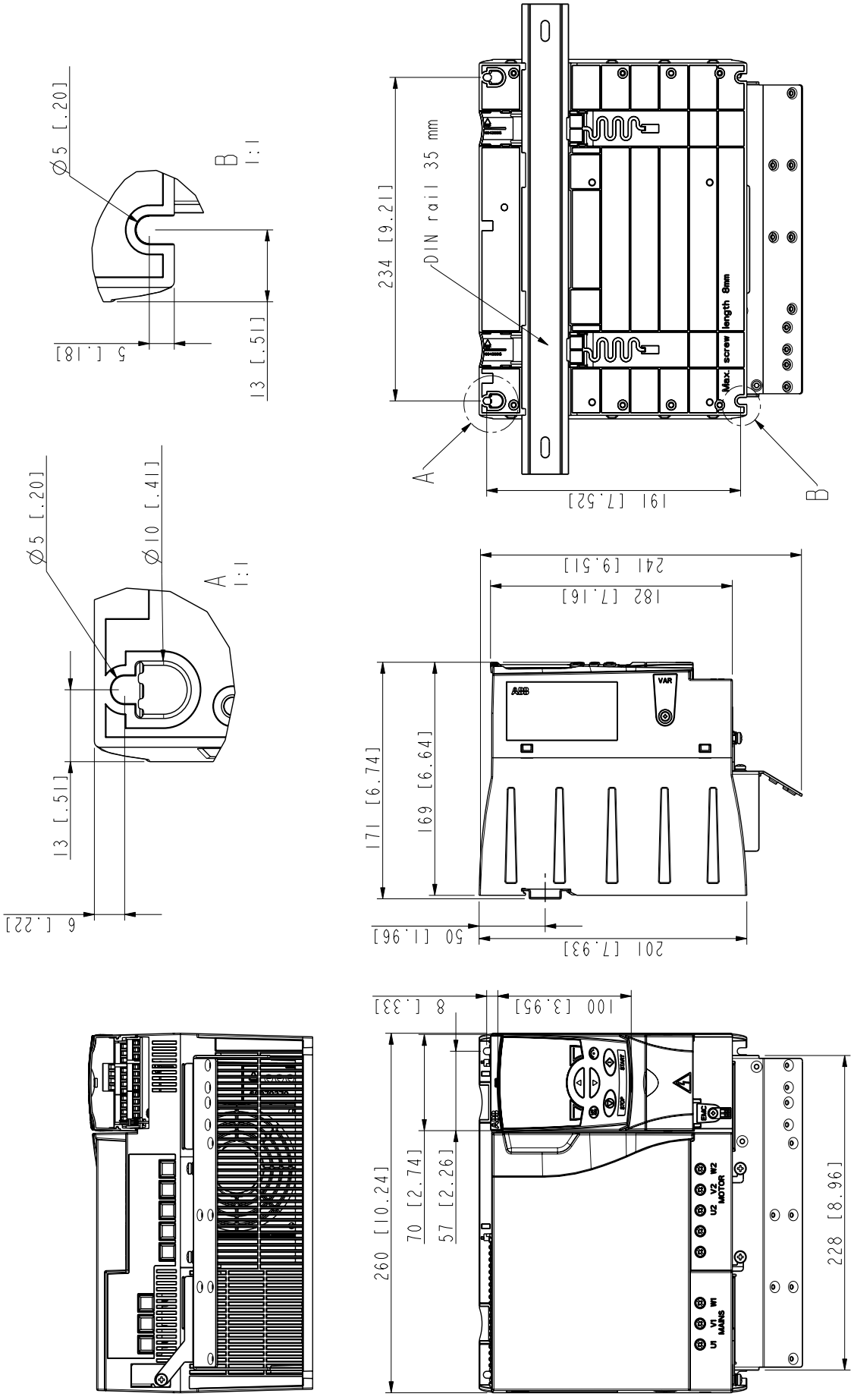

Frame size R4, IP20 (cabinet installation) / UL open

3AUA0000051130-A

Frame size R4, NEMA 1

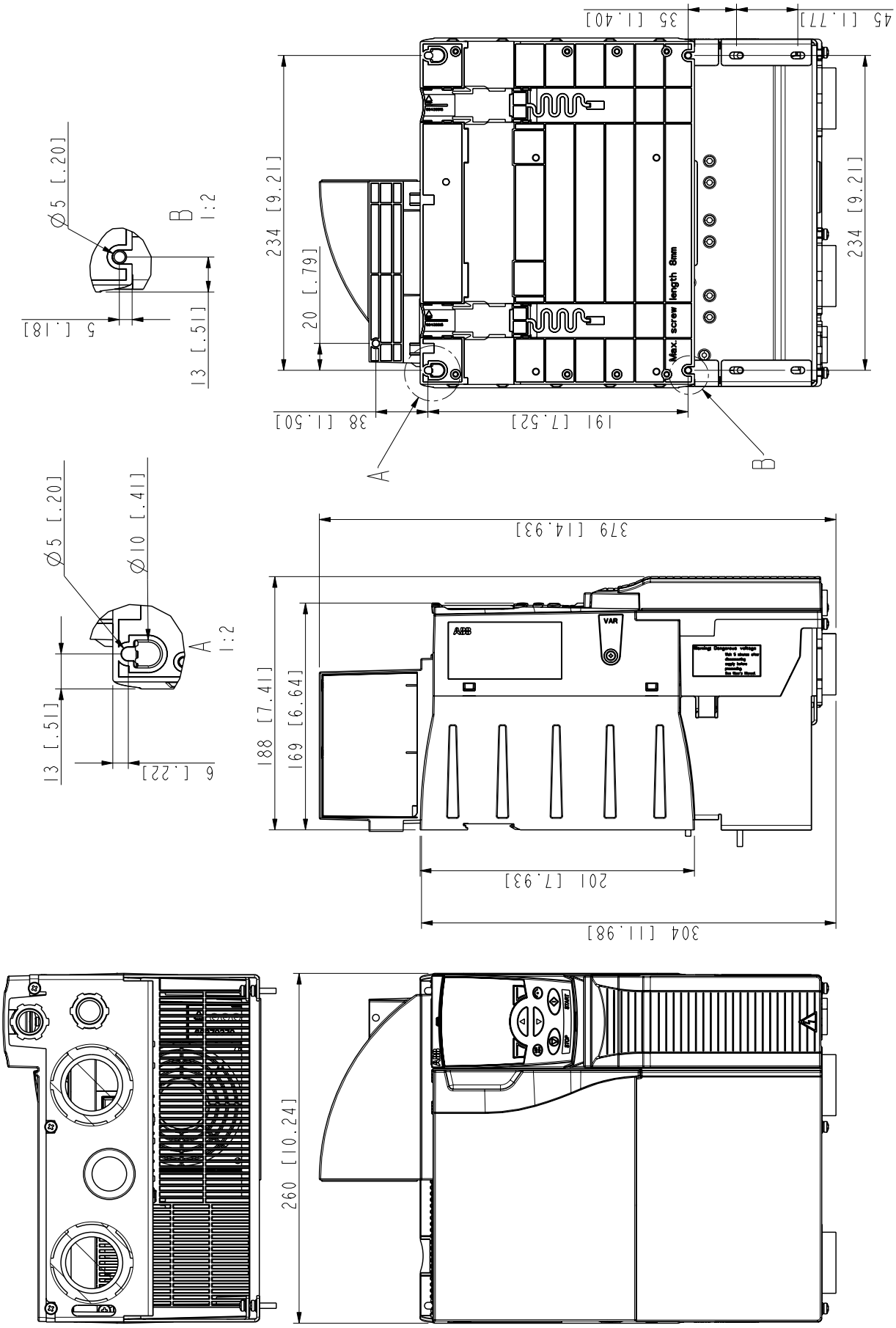

Frame size R4, IP20 / NEMA 1

3AUA0000051133-A

INDEX

Numerics

0xxxx register
    EFB mapping 288
3-wire macro 105
4xxxx register
    EFB mapping 288

A

ABB standard macro 104
abbreviations 21
ACC/DEC RAMP SHPE 198
actual values
    scaling, EFB comm 287
AI MIN FUNCTION 204
alternate macro 106
analog output
    parameter group 144
APPL SW VERSION 214
applicability 19
assistant 113
assistant control panel 67, 80
audience 19
autochange
    overview 264
    starting order counter 265
automatic reset 134
    see reset, automatic

B

backing up parameters (Assistant panel) 97
basic control panel 67, 69
bypass connection 42

C

clamping plates 34
comm (EFB)
    actual value scaling 287
    analog output control, activate 281
    control word 296
    diagnostics 288
    exception codes 290
    fault, no master station on line 317
    fault, swapped wires 317
    input ref. sel., activate 281
    misc. drive control, activate 287
    PID control setpoint source, activate 281
    reference scaling, ABB drives profile 286
    relay output control, activate 287
    set-up 279
    state diagram 295
comm (FBA)
    analog output control, activate 281
    configuration 280
    relay output control, activate 281
connection procedure 48
contrast, control panel 87
control panel 322
    contrast 87
    display contrast 87
control panel (Assistant)

parameter backup mode 97
control panel (Basic)
controls overview 70
CONTROL SW VERSION 214
control word
comm (EFB), description 296
controls overview (Basic panel) 70

D

declaration of incorporation 342
diagnostics
EFB comm 288
DIN rail installation 33
duty/assist cycle 138

E

EIA-485 54
embedded fieldbus 277, 317
EU directives 36
exception codes, EFB modbus 290
External control 171
external control 118
EXTERNAL FAULT 205
EXTERNAL FAULT 131

F

Fault History 302
Fault reset 186
Firmware version 214
frame size 21

H
hand/auto macro 108

I
installation 32
installation checklist 55
insulation 45
IR COMPENSATION 200, 201

L
Living zero 204
local control 117

M
macro 101
Maintenance
    Capacitors 321
    Fan 320
maintenance intervals 319
mapping
    EFB modbus 290
modbus
    EFB coils 288
    EFB holding registers 288
    EFB mapping summary 290
    EFB supported features 288
    EFB technical data 288
Modbus mapping 288
Motor overload protection 230, 240, 241
motor potentiometer macro 107
motor temperature
    measure, parameter group 144

O

operation principle 23
overview 24
OVERVOLTAGE CTRL 192

P

PANEL LOSS 205
parameter
    restore (Assistant panel) 97
PARAMETER LOCK 186
parameter lock 135
PFC control macro 110
PID
    process sets, parameter groups 138
    setpoint source, EFB comm activate 281
PID control macro 109
PID controller
    basic set-up 138
pipe fill 157
power cables 36
power connections 25
power limit 134
power loss ride-through 127
process PID sets, parameter groups 138
Program version 214

R

ratings 326
reference scaling
    EFB, ABB drives profile 286
required tools 30
reset, automatic

parameter group
residual current devices 42
RS-232 54

S

safety 15, 301
scaling
actual values, EFB comm 287
reference (EFB, ABB drives profile) 286
speed, constant
parameter group 144
SPFC control macro 111
standards 338
START FUNCTION 193
starting order counter 265
Starting the drive 171
start-up 57
state diagram
comm (EFB) 295
STOP FUNCTION 162, 194
Stopping the drive 171

T

terms 21
TEST DATE 214
thermal overload protection 41
timer functions
parameter group 144
type designation 26, 27

U

UNDERVOLTAGE CTRL 192

unpacking 31
US requirements 38
USER MACRO IO CHG 187
user macros 112

V

Version 214

W

warnings
    use of warnings 15

Further information

Product and service inquiries

Address any inquiries about the product to your local ABB representative, quoting the type designation and serial number of the unit in question. A listing of ABB sales, support and service contacts can be found by navigating to www.abb.com/drives and selecting *Sales, Support and Service network*.

Product training

For information on ABB product training, navigate to www.abb.com/drives and select *Training courses*.

Providing feedback on ABB Drives manuals

Your comments on our manuals are welcome. Go to www.abb.com/drives and select *Document Library – Manuals feedback form (LV AC drives)*.

Document library on the Internet

You can find manuals and other product documents in PDF format on the Internet. Go to www.abb.com/drives and select *Document Library.* You can browse the library or enter selection criteria, for example a document code, in the search field.

Contact us

ABB Oy
Drives
P.O. Box 184
FI-00381 HELSINKI
FINLAND
Telephone +358 10 22 11
Fax +358 10 22 22681
www.abb.com/drives

ABB Inc.
Automation Technologies
Drives & Motors
16250 West Glendale Drive
New Berlin, WI 53151
USA
Telephone 262 785-3200
1-800-HELP-365
Fax 262 780-5135
www.abb.com/drives

ABB Beijing Drive Systems Co. Ltd.
No. 1, Block D, A-10 Jiuxianqiao Beilu
Chaoyang District
Beijing, P.R. China, 100015
Telephone +86 10 5821 7788
Fax +86 10 5821 7618
www.abb.com/drives

3AUA0000044201 Rev C (EN) EFFECTIVE: 2011-12-13

Power and productivity
for a better world™