Options for ABB drives, converters and inverters

User's manual
FECA-01 EtherCAT® adapter module

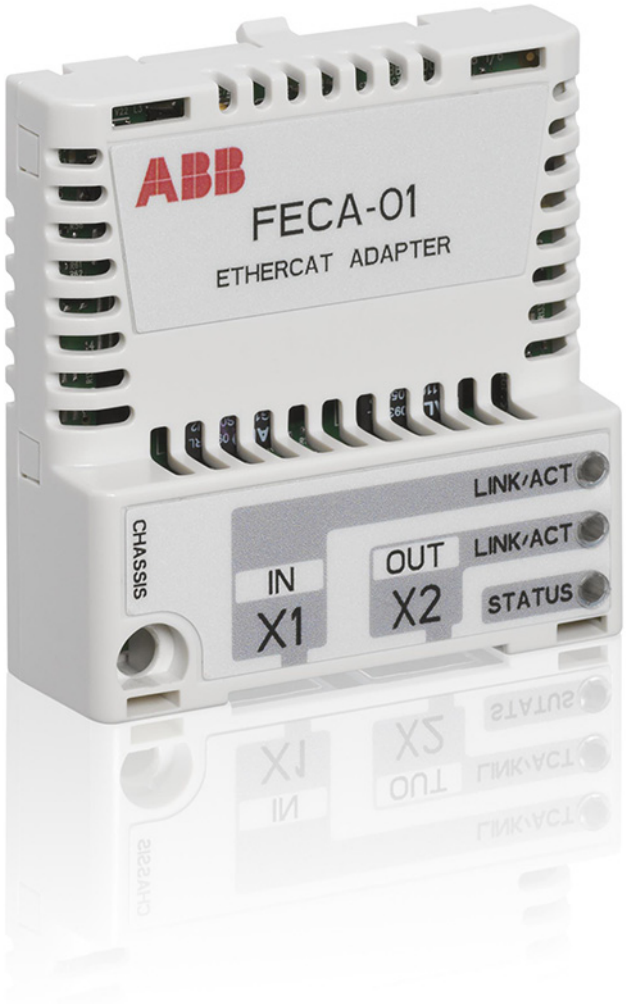

Power and productivity
for a better world™

List of related manuals

See section *Related manuals* on page *16*.

EtherCAT® is registered trademark and patented technology, licensed by Beckhoff Automation GmbH, Germany.

User’s manual

FECA-01 EtherCAT® adapter module

Table of contents

1. Safety

4. Mechanical installation

5. Electrical installation

6. Start-up

3AUA0000068940 Rev C
EN
EFFECTIVE: 2012-07-09

© 2012 ABB Oy
All Rights Reserved.

Table of contents

1. Safety

What this chapter contains 11
Use of warnings 12
Safety in installation 13

2. About this manual

What this chapter contains 15
Applicability 15
Compatibility 15
Target audience 15
Purpose of the manual 16
Related manuals 16
Before you start 17
Contents 18
Terms and abbreviations used in this manual 19
    General terms 19
    General abbreviations 19
    EtherCAT abbreviations 20

3. Overview of the EtherCAT network and the FECA-01 module

What this chapter contains 21
EtherCAT network 21
    Example topology of the EtherCAT link 22
FECA-01 EtherCAT adapter module 23
    Layout of the adapter module 24

4. Mechanical installation

What this chapter contains 25
Delivery check 25
Mounting the adapter module 26

5. Electrical installation

What this chapter contains 27
General cabling instructions 27
Connecting the module to the EtherCAT network 28

6. Start-up

What this chapter contains 31
Drive configuration 32
EtherCAT connection configuration 32
FECA-01 configuration parameters – group A (group 1) 33
FECA-01 configuration parameters – group B (group 2) 38
FECA-01 configuration parameters – group C (group 3) 38
Control locations 38
Starting up ACS355 drives 39
Parameter settings – ACS355 40
Starting up ACSM1 drives 42
Parameter settings – ACSM1 43
Starting up ACS850 drives 46
Parameter settings – ACS850 47
Starting up ACS880 drives 49
Parameter settings – ACS880 50
Configuring the master station 52
EtherCAT Slave Information files 52
Configuring an ABB AC500 PLC 52
Configuring Beckhoff’s TwinCAT 57

7. Communication profiles

What this chapter contains 63
Communication profiles 63
CANopen device profile CiA 402 64
Device control state machine 64
Supported modes of operation 64
Homing mode 65
Profile position mode 65
Profile velocity mode 65
Profile torque mode 65

Velocity mode 66
Cyclic synchronous position mode 66
Cyclic synchronous velocity mode 66
Cyclic synchronous torque mode 66
Process data scaling with the CiA 402 profile 67
Torque data 67
Velocity data 67
Position data 67
Process feedback values in the CiA 402 profile 67
Control word and Status word of the CiA 402 profile 68
ABB Drives communication profile 73
Control word and Status word 73
Control word contents 73
Status word contents 76
State machine 78
References 79
Scaling 79
Actual values 80
Scaling 80

8. Communication protocol

What this chapter contains 81
EtherCAT frame structure 81
EtherCAT services 82
Addressing modes and FMMUs 83
Sync managers 83
Sync manager channel 0 84
Sync manager channel 1 84
Sync manager channel 2 84
Sync manager channel 3 84
Sync manager watchdog 84
EtherCAT state machine 85
Drive synchronization 86
Free run 86
DC sync – Synchronous with a DC Sync0 event 86
CANopen over EtherCAT 87

Process Data Objects 87
Emergency Objects 90
Communication between adapter module and drive 90
Cyclic high priority communication 90
Cyclic low priority communication 91

9. Diagnostics

What this chapter contains 93
LED indications 93

10. Technical data

What this chapter contains 95
FECA-01 95
EtherCAT link 96

11. Appendix A – CoE Object Dictionary

What this chapter contains 97
Object Dictionary structure 97
Communication profile objects
(0x1000...0x1FFF) 99
Manufacturer-specific profile objects
(0x2000...0x5FFF) 114
Drive parameter access via CoE objects 117
Standardized device profile area
(0x6000…0x9FFF) 118
CoE objects affecting drive parameters 127
CoE objects affecting ACSM1 parameters 128
CoE objects affecting ACS850 parameters 129
CoE objects affecting ACS355 parameters 130
CoE objects affecting ACS880 parameters 131
Vendor-specific AL Status codes 131

12. Appendix B – CoE error codes

What this chapter contains 133
Error codes 133

Further information

Product and service inquiries 141
Product training 141
Providing feedback on ABB Drives manuals 141
Document library on the Internet 141

1

Safety

What this chapter contains

The chapter presents the warning symbols used in this manual and the safety instructions which you must follow when installing an optional module into a drive, converter or inverter. If ignored, physical injury or death may follow, or damage may occur to the equipment. Read this chapter before you start the installation.

Use of warnings

Warnings caution you about conditions which can result in serious injury or death and/or damage to the equipment and advise on how to avoid the danger. The following warning symbols are used in this manual:

Electricity warning warns of hazards from electricity which can cause physical injury and/or damage to the equipment.

General warning warns about conditions, other than those caused by electricity, which can result in physical injury and/or damage to the equipment.

Safety in installation

These warnings are intended for all who install an optional module into a drive, converter or inverter.

WARNING! Ignoring the following instructions can cause physical injury or death, or damage to the equipment.

- Only qualified electricians are allowed to install and maintain the drive, converter or inverter!
- Disconnect the drive, converter and/or inverter into which the module will be installed from all possible power sources. After disconnecting, always wait for 5 minutes to let the intermediate circuit capacitors discharge before you proceed.
- Do not work on the control cables when power is applied to the external control circuits of the drive, converter or inverter. Externally supplied control circuits may carry dangerous voltage.

2

About this manual

What this chapter contains

This chapter introduces this manual.

Applicability

This manual applies to the FECA-01 EtherCAT® adapter module (+K469), SW version 112.

Compatibility

The FECA-01 EtherCAT adapter module is compatible with the following drives:

- ACS355
- ACSM1 (motion and speed variants)
- ACS850
- ACS880.

The adapter module is compatible with all master stations that support the EtherCAT® protocol.

Target audience

The reader is expected to have basic knowledge of the fieldbus interface, electrical fundamentals, electrical wiring practices and how to operate the drive.

Purpose of the manual

The manual provides information on installing, commissioning and using an FECA-01 EtherCAT adapter module.

Related manuals

The related manuals are listed below.

	Code (English)
Drive user's manuals	
ACS355 drives (0.37…22 kW, 0.5…30 hp) user's manual	*3AUA0000066143*
Drive hardware manuals and guides	
ACSM1-204 regen supply modules (5.3 to 61 kW) hardware manual	*3AUA0000053713*
ACSM1-04 drive modules (0.75 to 45 kW) hardware manual	*3AFE68797543*
ACSM1-04 drive modules (55 to 110 kW) hardware manual	*3AFE68912130*
ACSM1-04Lx liquid-cooled drive modules (55 to 160 kW) hardware manual	*3AUA0000022083*
ACS850-04 (0.37…45 kW) hardware manual	*3AUA0000045496*
ACS850-04 (55…160 kW, 75…200 hp) hardware manual	*3AUA0000045487*
ACS850-04 (200…500 kW, 250…600 hp) hardware manual	*3AUA0000026234*
ACS880-01 (0.55 to 250 kW, 0.75 to 350 hp) hardware manual	*3AUA0000078093*

Drive firmware manuals and guides	Code (English)
ACSM1 motion control program firmware manual	*3AFE68848270*
ACSM1 speed and torque control program firmware manual	*3AFE68848261*
ACSM1 regen supply control program firmware manual	*3AUA0000052174*
ACS850 standard control program firmware manual	*3AUA0000045497*
ACS880 primary control program firmware manual	*3AUA0000085967*

Option manuals and guides	
FECA-01 EtherCAT® adapter module user's manual	*3AUA0000068940*

You can find manuals and other product documents in PDF format on the Internet. See section *Document library on the Internet* on the inside of the back cover. For manuals not available in the Document library, contact your local ABB representative.

Before you start

It is assumed that the drive is installed and ready to operate before you start the installation of the adapter module.

In addition to conventional installation tools, have the drive manuals available during the installation as they contain important information not included in this manual. The drive manuals are referred to at various points of this manual.

Contents

The manual consists of the following chapters:

- *Safety* presents the safety instructions which you must follow when installing a fieldbus adapter module.
- *About this manual* introduces this manual.
- *Overview of the EtherCAT network and the FECA-01 module* contains a short description of the EtherCAT network and the adapter module.
- *Mechanical installation* contains a delivery checklist and instructions on mounting the adapter module.
- *Electrical installation* contains general cabling instructions and instructions on connecting the module to the EtherCAT network.
- *Start-up* presents the steps to take during the start-up of the drive with the adapter module and gives examples of configuring the master system.
- *Communication profiles* describes the communication profiles used in the communication between the EtherCAT network, the adapter module and the drive.
- *Communication protocol* describes the communication on an EtherCAT network.
- *Diagnostics* explains how to trace faults with the status LEDs on the adapter module.
- *Technical data* contains the technical data of the adapter module and the EtherCAT link.
- *Appendix A – CoE Object Dictionary* contains a list of the CANopen objects supported by the adapter module.
- *Appendix B – CoE error codes* contains a list of the CANopen over EtherCAT error codes.

Terms and abbreviations used in this manual

General terms

Term	Explanation
Command word	See *Control word*.
Communication module	Communication module is a name for a device (eg, a fieldbus adapter) through which the drive is connected to an external communication network (eg, a fieldbus). The communication with the module is activated with a drive parameter.
Control word	16-bit or 32-bit word from master to slave with bit-coded control signals (sometimes called the Command word)
FECA-01 EtherCAT adapter module	One of the optional fieldbus adapter modules available for ABB drives. FECA-01 is a device through which an ABB drive is connected to an EtherCAT network.
Parameter	Operating instruction for the drive. Parameters can be read and programmed with the drive control panel, drive PC tools or through the adapter module.
Profile	Adaptation of the protocol for certain application field, for example, drives. In this manual, drive-internal profiles (eg, DCU or FBA) are called native profiles.
Status word	16-bit or 32-bit word from slave to master with bit-coded status messages

General abbreviations

Abbreviation	Explanation
CAN	Controller Area Network
CiA	CAN in Automation
CIDR	Classless Inter-Domain Routing
EMC	Electromagnetic compatibility

Abbreviation	Explanation
FBA	Fieldbus adapter
FTP	Foil shielded twisted pair
IP	Internet Protocol
LSB	Least significant bit
MSB	Most significant bit
STP	Shielded twisted pair
UDP	User Datagram Protocol
UTP	Unshielded twisted pair
XML	Extensible Markup Language

EtherCAT abbreviations

Abbreviation	Explanation
CoE	CANopen over EtherCAT
EMCY	Emergency Object
EoE	Ethernet over EtherCAT
ESC	EtherCAT Slave Controller
ESI	EtherCAT Slave Information
FMMU	Fieldbus Memory Management Unit
SDO	Service Data Object
PDI	Process Data Interface
PDO	Process Data Object

Further information on the EtherCAT protocol is available at www.ethercat.org.

3

Overview of the EtherCAT network and the FECA-01 module

What this chapter contains

This chapter contains a short description of the EtherCAT network and the FECA-01 EtherCAT adapter module.

EtherCAT network

EtherCAT is a Real Time Ethernet technology which aims to maximize the use of the full duplex Ethernet bandwidth. It overcomes the overhead normally associated with Ethernet by employing "on the fly" processing hardware.

An EtherCAT bus consists of a master system and up to 65535 slave devices, connected together with standard Ethernet cabling. The slave devices process the incoming Ethernet frames directly, extract or insert relevant data and transfer the frame to the next EtherCAT slave device. The last slave device in the bus segment sends the fully processed frame back to the master.

There are several application layer protocols defined for EtherCAT. FECA-01 supports the CANopen application layer over EtherCAT (CoE), which provides the familiar CANopen communication mechanisms: Service Data Objects (SDO), Process Data Objects (PDO) and network management similar to the CANopen protocol.

Further information is available from the EtherCAT technology group (www.ethercat.org).

Example topology of the EtherCAT link

An example of an allowable topology is shown below.

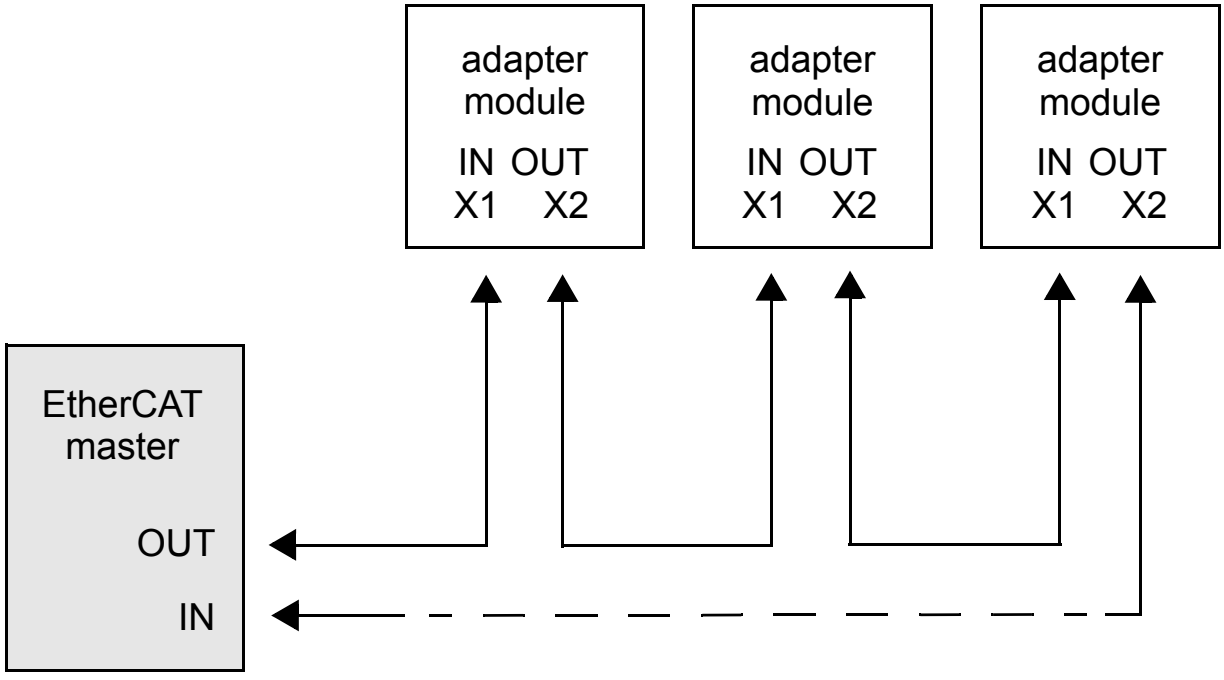

FECA-01 EtherCAT adapter module

The FECA-01 EtherCAT adapter module is an optional device for ABB drives which enables the connection of the drive to an EtherCAT network.

Through the adapter module you can:

- give control commands to the drive (for example, Start, Stop, Run enable)
- feed a motor speed, torque or position reference to the drive
- give a process actual value or a process reference to the PID controller of the drive
- read status information and actual values from the drive
- change drive parameter values
- reset a drive fault.

The EtherCAT commands and services supported by the adapter module are discussed in chapter *Communication protocol*. Refer to the user documentation of the drive as to which commands are supported by the drive.

The adapter module is mounted into an option slot on the motor control board of the drive. See the drive manuals for module placement options.

The module is classified as a complex slave device.

EtherCAT slave information files for ABB drives are available through your local ABB representative and the Document library (www.abb.com).

Layout of the adapter module

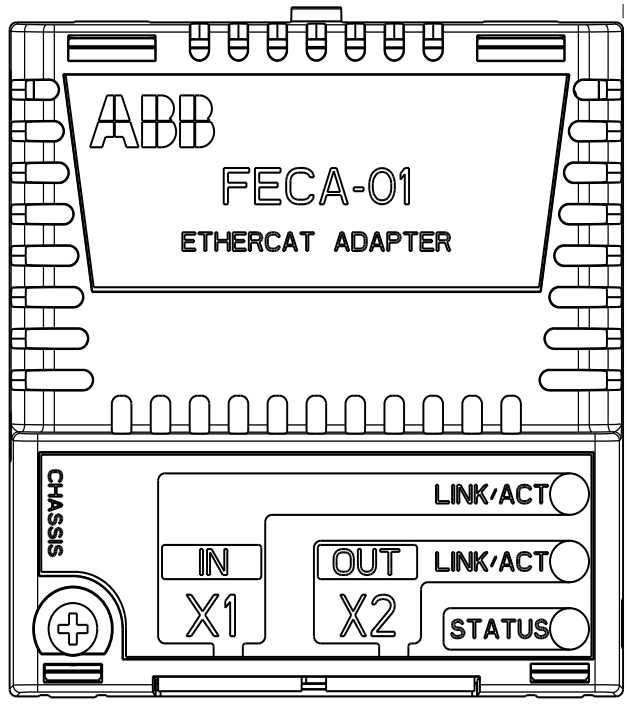

Mounting screw

Front view

Diagnostic LEDs (see chapter *Diagnostics*)

EtherCAT connector X1

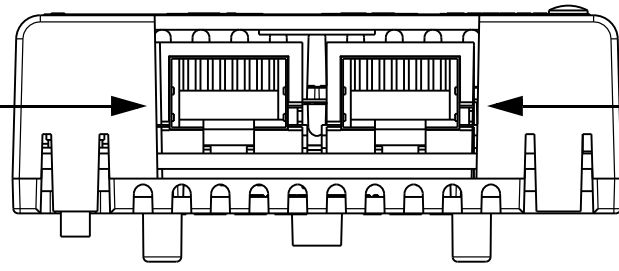

EtherCAT connector X2

Side view

4

Mechanical installation

What this chapter contains

This chapter contains a delivery checklist and instructions on mounting the adapter module.

WARNING! Follow the safety instructions given in this manual and the drive documentation.

Delivery check

The option package for the adapter module contains:

- EtherCAT adapter module, type FECA-01
- this manual.

Mounting the adapter module

The adapter module is inserted into its specific position in the drive. The adapter module is held in place with plastic pins and one screw. The screw also provides the electrical connection between the module and drive frame for cable shield termination.

When the module is installed, the signal and power connection to the drive is made through a 20-pin connector. (All drives do not use all the available signals so the connector on the drive may have fewer pins.)

Mounting procedure:

1. Insert the module carefully into its position on the drive.
2. Fasten the screw.

Note: It is essential to install the screw properly to fulfill the EMC requirements and to ensure the proper operation of the module.

For more information on mounting the adapter module, see the drive manuals.

5

Electrical installation

What this chapter contains

This chapter contains:

- general cabling instructions
- instructions on connecting the module to the EtherCAT network.

WARNING! Before installation, switch off the drive power supply. Wait five minutes to ensure that the capacitor bank of the drive is discharged. Switch off all dangerous voltages connected from external control circuits to the inputs and outputs of the drive.

General cabling instructions

- Arrange the bus cables as far away from the motor cables as possible.
- Avoid parallel runs.
- Use bushings at cable entries.

When you connect the network cables, insert the plug into the jack so that there is no misalignment. Do not apply any twisting or bending moments to the cable or the plug. Do not use excessive force. Make sure that the plug latches into place and finally check that the plug has entered all the way into the jack.

Route the cables so that they do not transmit bending stress to the connector.

Connecting the module to the EtherCAT network

The adapter module has two 100BASE-TX Ethernet ports with 8P8C (RJ45) modular connectors. Standard Category 5e STP or FTP Ethernet cables can be used. It is not recommended to use UTP cables because drives are typically installed in noisy environments. When Cat 5e STP or FTP is used, the cable shield is internally connected to the drive frame through the adapter module.

Connection procedure:

1. Connect the network cables to the two RJ45 connectors (X1 and X2) on the adapter module.

   Connect the cable from the EtherCAT master to the left port (X1 IN).

2. In the line topology, if there are more slave devices in the same line, connect the next slave device to the right port (X2 OUT).

3. If there is a redundant ring, connect the right port (X2 OUT) of the last slave device to the second port of the EtherCAT master.

The figure below illustrates the cable connections:

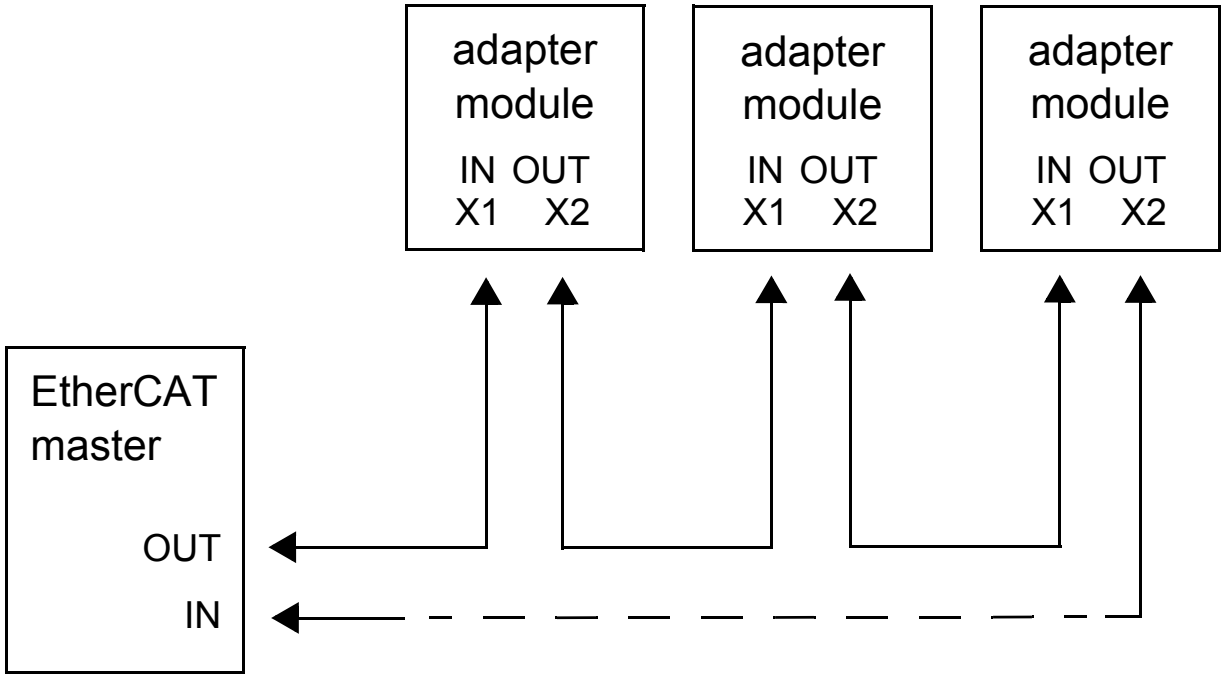

6

Start-up

What this chapter contains

This chapter contains:

- information on configuring the drive for operation with the adapter module
- drive-specific instructions on starting up the drive with the adapter module
- examples of configuring the master station for communication with the adapter module.

WARNING! Follow the safety instructions given in this manual and the drive documentation.

Drive configuration

The following information applies to all drive types compatible with the adapter module, unless otherwise stated.

EtherCAT connection configuration

After the adapter module has been mechanically and electrically installed according to the instructions in chapters *Mechanical installation* and *Electrical installation*, the drive must be prepared for communication with the module.

The detailed procedure of activating the module for EtherCAT communication with the drive depends on the drive type. Normally, a parameter must be adjusted to activate the communication. See the drive-specific start-up procedures starting on page *39*.

When the adapter module is connected to a specific drive type for the first time, it scans through all the drive parameter groups to allow the EtherCAT master to access the parameters starting via CoE objects. This scanning procedure may take up to one minute depending on the drive type. The adapter module does not respond to the EtherCAT bus during the scanning procedure. As long as the adapter module is connected to a drive of the same type and version, there is no need to scan through all the drive parameters again at start-up.

Once communication between the drive and the adapter module has been established, several configuration parameters are copied to the drive. These parameters are shown in the tables below and must be checked first and adjusted where necessary.

Note: Not all drives display descriptive names for the configuration parameters. To help you identify the parameters in different drives, the names displayed by each drive are given in grey boxes in the tables.

Note: The new settings take effect only when the adapter module is powered up the next time or when the fieldbus adapter refresh parameter is activated.

FECA-01 configuration parameters – group A (group 1)

Note: The actual parameter group number depends on the drive type. Group A (group 1) corresponds to:

- parameter group 51 in ACS355, ACSM1 and ACS850
- parameter group 51 in ACS880 if the adapter is installed as fieldbus adapter A or group 54 if the adapter is installed as fieldbus adapter B.

No.	Name/Value	Description	Default
01	FBA TYPE	**Read-only.** Shows the fieldbus adapter type. The value cannot be adjusted by the user. If the value is not 135, the adapter module sets the fieldbus configuration parameters to their default values.	**135** = EtherCAT
02	PROFILE **ACS355:** FB PAR 2 **ACSM1:** FBA PAR2 **ACS850:** FBA par2 **ACS880:** Profile	Selects the communication profile used by the adapter module. It is not recommended to switch communication profiles during operation. For more information on the communication profiles, see chapter *Communication profiles*.	**0** = CiA 402
	0 = CiA 402	CANopen device profile CiA 402 selected	
	1 = ABB Drives profile	ABB Drives profile selected	
	3 = Transparent	Transparent profile selected	
03	STATION ALIAS **ACS355:** FB PAR 3 **ACSM1:** FBA PAR3 **ACS850:** FBA par3 **ACS880:** Station alias	Configured Station Alias address used for node addressing. Use of this alias is activated by the master.	0
04 … 20	Reserved	These parameters are not used by the adapter module.	N/A

No.	Name/Value	Description	Default
21	ERASE FBA CONFIG **ACS355:** FB PAR 21 **ACSM1:** FBA PAR21 **ACS850:** FBA par21 **ACS880:** Erase FBA config	To erase all saved CoE objects from the adapter module, write value 1 to this parameter and refresh the parameters with parameter *27 FBA PAR REFRESH*. Adapter module sets the parameter value back to 0 automatically.	**0** = No
	1 = Erase	Erases FBA configuration	
	0 = No	No operation	
22	DRIVE POS CTL MODE **ACSM1:** FBA PAR22	Selects which ACSM1 drive control mode is used in the CiA 402 cyclic synchronous position (csp) operation mode. For more information on the ACSM1 position and synchron control modes, see *ACSM1 motion control program firmware manual* (3AFE68848270 [English]).	**0** = Position control
	0 = Position control	Position control mode selected	
	1 = Synchron control	Synchron control mode selected	
23 … 26	Reserved	These parameters are not used by the adapter module.	N/A
27	FBA PAR REFRESH **ACS355/ACSM1:** FBA PAR REFRESH **ACS850/ACS880:** FBA par refresh	Validates any changed adapter module configuration parameter settings. After refreshing, the value reverts automatically to **0** = Done. **Note:** This parameter cannot be changed while the drive is running.	**0** = Done
	0 = Done	Refreshing done	
	1 = Refresh/Configure	Refreshing	

No.	Name/Value	Description	Default
28	PAR TABLE VER **ACS355:** FILE CPI FW REV **ACSM1:** PAR TABLE VER **ACS850/ACS880:** Par table ver	**Read-only.** Displays the parameter table revision of the fieldbus adapter module mapping file stored in the memory of the drive.	N/A
		Parameter table revision	
29	DRIVE TYPE CODE **ACS355:** FILE CONFIG ID **ACSM1:** DRIVE TYPE CODE **ACS850/ACS880:** Drive type code	**Read-only.** Displays the drive type code of the fieldbus adapter module mapping file stored in the memory of the drive.	N/A
		Drive type code of the fieldbus adapter module mapping file	
30	MAPPING FILE VER **ACS355:** FILE CONFIG REV **ACSM1:** MAPPING FILE VER **ACS850/ACS880:** Mapping file ver	**Read-only.** Displays the fieldbus adapter module mapping file revision stored in the memory of the drive in decimal format.	N/A
		Mapping file revision	

No.	Name/Value	Description	Default
31	D2FBA COMM STA **ACS355:** FBA STATUS **ACSM1:** D2FBA COMM STA **ACS850/ACS880:** D2FBA comm sta	**Read-only.** Displays the status of the fieldbus adapter module communication. **Note:** The value names may vary by drive.	**0** = Idle OR **4** = Off-line
	0 = Idle	Adapter is not configured.	
	1 = Exec.init	Adapter is initializing.	
	2 = Time out	Time-out has occurred in the communication between the adapter and the drive.	
	3 = Conf.err	Adapter configuration error: The major or minor revision code of the common program revision in the fieldbus adapter module is not the revision required by the module or mapping file upload has failed more than three times.	
	4 = Off-line	Adapter is off-line.	
	5 = On-line	Adapter is on-line.	
	6 = Reset	Adapter is performing a hardware reset.	
32	FBA COMM SW VER **ACS355:** FBA CPI FW REV **ACSM1:** FBA COMM SW VER **ACS850:** FBA comm sw ver **ACS880:** FBA comm SW ver	**Read-only.** Displays the common program revision of the adapter module.	N/A
		Common program revision of the adapter module	

No.	Name/Value	Description	Default
33	FBA APPL SW VER **ACS355:** FBA APPL FW REV **ACSM1:** FBA APPL SW VER **ACS850:** FBA appl sw ver **ACS880:** FBA appl SW ver	**Read-only.** Displays the application program revision of the adapter module. For example, 0x0111 = version 111.	N/A
		Application program revision of the adapter module	

FECA-01 configuration parameters – group B (group 2)

Note: The actual parameter group number depends on the drive type. Group B (group 2) corresponds to:

- parameter group 55 in ACS355
- parameter group 53 in ACSM1 and ACS850
- parameter group 53 in ACS880 if the adapter is installed as fieldbus adapter A or group 56 if the adapter is installed as fieldbus adapter B.

All parameters in this group are handled by the adapter module automatically. Do not modify the settings of these parameters.

FECA-01 configuration parameters – group C (group 3)

Note: The actual parameter group number depends on the drive type. Group C (group 3) corresponds to:

- parameter group 54 in ACS355
- parameter group 52 in ACSM1 and ACS850
- parameter group 52 in ACS880 if the adapter is installed as fieldbus adapter A or group 55 if the adapter is installed as fieldbus adapter B.

All parameters in this group are handled by the adapter module automatically. Do not modify the settings of these parameters.

Control locations

ABB drives can receive control information from multiple sources including digital inputs, analog inputs, the drive control panel and a communication module (for example, the adapter module). ABB drives allow the user to separately determine the source for each type of control information (Start, Stop, Direction, Reference, Fault reset, etc.).

To give the fieldbus master station the most complete control over the drive, the communication module must be selected as the source for this information. The parameter setting examples below contain the drive control parameters needed in the examples. For a complete parameter list, see the drive documentation.

Starting up ACS355 drives

1. Power up the drive.
2. Enable the communication between the adapter module and the drive with parameter 9802 COMM PROT SEL.
3. Set the FECA-01 configuration parameters in parameter group 51. At the minimum, select the communication profile with parameter 5102.
4. Validate the settings made in parameter group 51 by setting parameter 5127 FBA PAR REFRESH to REFRESH.
5. Set the relevant drive control parameters to control the drive according to the application. If the CiA 402 profile is used, set and check all parameters as instructed in the table below.
6. **CiA 402 profile only:** If you intend to use the CiA 402 profile, do the following:
   - Select the desired operation mode for the adapter module and the drive in CoE object 0x6060 by modifying the object value via the master station. See section *Supported modes of operation* on page *64* and *Appendix A – CoE Object Dictionary*.
   - Take into use suitable PDOs for the operation mode in use. You can do this either via the default RxPDOs and TxPDOs as described in section *Process Data Objects* on page *87*, or you can create your own custom PDOs as well.

Parameter settings – ACS355

The ACS355 parameters and mandatory parameter settings for the EtherCAT fieldbus communication with the CiA 402 profile are listed in the following table.

Note: All other ACS355 parameters not mentioned in the table below are assumed to be at their default values.

Drive parameter	Setting for ACS355 drives	Description
9802 COMM PROT SEL	EXT FBA	Activates the communication (fieldbus) module.
5101 FBA TYPE	EtherCAT	Displays the type of the fieldbus adapter module.
5102 FB PAR 2 (PROFILE)	**0** (= CiA 402)	Selects the CiA 402 profile.
5127 FBA PAR REFRESH	REFRESH	Validates the FECA-01 configuration parameter settings.
1001 EXT1 COMMANDS	COMM	Selects the fieldbus interface as the source of the start and stop commands for external control location 1.
1002 EXT2 COMMANDS	COMM	Selects the fieldbus interface as the source of the start and stop commands for external control location 2.
1102 EXT1/EXT2 SEL	COMM	Enables external control location 1/2 selection through the fieldbus.
1103 REF1 SELECT	COMM	Selects the fieldbus reference 1 as the source for speed reference.
1106 REF2 SELECT	COMM	Selects the fieldbus reference 2 as the source for torque reference.
1601 RUN ENABLE	COMM	Selects the fieldbus interface as the source for the inverted Run enable signal (Run disable).
1604 FAULT RESET SEL	COMM	Selects the fieldbus interface as the source for the fault reset signal.

Drive parameter	Setting for ACS355 drives	Description
1608 START ENABLE 1	COMM	Selects the fieldbus interface as the source for the inverted Start Enable signal.
1609 START ENABLE 2	COMM	Selects the fieldbus interface as the source for the Start Enable 2 signal.
2201 ACC/DEC 1/2 SEL	COMM	Selects the fieldbus interface as the source for the ramp pair 1/2 selection.
2209 RAMP INPUT 0	COMM	Selects the fieldbus interface as the source for forcing the ramp input to zero.
9904 MOTOR CTRL MODE	VECTOR:SPEED VECTOR:TORQ SCALAR:FREQ	Selects the motor control mode. **Note:** The CiA 402 operation modes available depend on this setting. • When VECTOR:TORQ has been selected, operation modes vl, tq and cst are available. • When VECTOR:SPEED or SCALAR:FREQ has been selected, only the vl mode is available.

Starting up ACSM1 drives

1. Power up the drive.
2. Enable the communication between the adapter module and the drive by setting parameter 50.01 FBA ENABLE to Enable.
3. Select application-specific values for parameters 50.04 and 50.05. The allowed values are shown in the table below.
4. Set the FECA-01 configuration parameters in parameter group 51. At the minimum, set 51.02 PROFILE according to the application.
5. Validate the settings made in parameter group 51 by setting parameter 51.27 FBA PAR REFRESH to REFRESH.
6. Set the relevant drive control parameters to control the drive according to the application. If the CiA 402 profile is used, set and check all parameters as instructed in the table below.
7. **CiA 402 profile only:** If you intend to use the CiA 402 profile, do the following:
   - Select the desired operation mode for the adapter module and the drive in CoE object 0x6060 by modifying the object value via the master station. See section *Supported modes of operation* on page *64* and *Appendix A – CoE Object Dictionary*.
   - Take into use suitable PDOs for the operation mode in use. You can do this either via the default RxPDOs and TxPDOs as described in section *Process Data Objects* on page *87*, or you can create your own custom PDOs as well.

Parameter settings – ACSM1

The ACSM1 parameters and mandatory parameter settings for the EtherCAT fieldbus communication with the CiA 402 profile are listed in the following table.

Note: All other ACSM1 parameters not mentioned in the table below are assumed to be at their default values.

Drive parameter	Setting for ACSM1 drives	Description
50.01 FBA ENABLE	Enable	Enables communication between the drive and the fieldbus adapter module.
50.04 FBA REF1 MODESEL	Torque Speed Position (Raw data)	Selects the source for fieldbus actual value 1 (feedback value).[1)]
50.05 FBA REF2 MODESEL	Torque Speed Position (Raw data)	Selects the source for fieldbus actual value 2 (feedback value).[1)]
50.06 FBA ACT1 TR SRC	P.1.06 TORQUE P.1.01 SPEED ACT P.1.12 POS ACT	Effective only if the FBA REF1 MODESEL parameter has been set to "Raw data". In that case: Selects the source for fieldbus actual value 1.[2)]
50.07 FBA ACT2 TR SRC	P.1.06 TORQUE P.1.01 SPEED ACT P.1.12 POS ACT	Effective only if the FBA REF2 MODESEL parameter has been set to "Raw data". In that case: Selects the source for fieldbus actual value 2.
51.02 FBA PAR2 (PROFILE)	**0** (= CiA 402)	Selects the CiA 402 profile.
51.27 FBA PAR REFRESH	REFRESH	Validates the FECA-01 configuration parameter settings.
10.01 EXT1 START FUNC	FBA	Selects the fieldbus interface as the source of the start and stop commands for external control location 1.

Drive parameter	Setting for ACSM1 drives	Description
10.08 FAULT RESET SEL	P.FBA MAIN CW.8	Selects the fieldbus interface as the source for the fault reset signal.
24.01 SPEED REF1 SEL	FBA REF1	Selects the fieldbus reference 1 as the source for speed reference 1.
32.01 TORQ REF1 SEL	FBA REF1	Selects the fieldbus reference 1 as the source for torque reference 1.
34.01 EXT1/EXT2 SEL	C.False	Selects that the external control location is always EXT1.
34.02 EXT1 MODE 1/2SEL	C.False	Selects the source for the default drive control mode selection.
34.03 EXT1 CTRL MODE1	Speed Torque Position Synchron	Selects the default (power up) drive control mode. [3)] For more information on using the position control mode, see *ACSM1 motion control program firmware manual* (3AFE68848270 [English]).
57.09 KERNEL SYNC MODE	FBSync	See section *Drive synchronization* on page *86*.
60.02 POS AXIS MODE	Linear Rollover	Selects whether to have continuous position data range or position data range with one revolution wrap-around.[4)]
60.09 POS RESOLUTION	10…24	Selects the internal resolution of the position data between the module and the drive, not at the master.[5)]
60.05 POS UNIT	Revolution	Mandatory setting
60.10 POS SPEED UNIT	u/s	Mandatory setting
62.01 HOMING METHOD	CAN Method 1 … CAN Method35	Selects the homing method. The homing method needs to be selected if one intends to use homing. For more information on the homing methods, see *ACSM1 motion control program firmware manual* (3AFE68848270 [English]).

Drive parameter	Setting for ACSM1 drives	Description
62.02 HOMING START FUNC	Normal	Mandatory setting if the homing procedure will be used
62.03 HOMING START	P.2.12 FBA MAIN CW.26	Mandatory setting if the homing procedure will be used
65.01 POS REFSOURCE	Ref table	Mandatory setting
65.02 PROF SET SEL	C.False	Mandatory setting
65.03 POS START 1	P.2.12 FBA MAIN CW.25	Mandatory setting
65.04 POS REF 1 SEL	FBA REF1	Mandatory setting
65.22 PROF VEL REF SEL	FBA REF1	Mandatory setting
67.01 SYNC REF SEL	FBA REF1	Mandatory setting if the ACSM1 Synchron control mode is used
67.03 INTERPOLAT MODE	INTERPOLATE	Engages the interpolator in the Synchron control mode.
67.04 INTERPOLAT CYCLE	Set a value equalling the bus cycle time (ms).	Sets the interpolation cycle according to the bus cycle time.
70.03 POS REF ENA	C.False	Mandatory setting

1) The data sources for the process feedback values are selected with the FBA REF1/2 MODESEL parameters. Torque, speed or position feedbacks may be selected. Only two out of the three can be selected simultaneously.

2) **Note:** After changing parameter 50.06 or 50.07, the settings must be read into the adapter module by using the parameter 51.27 FBA PAR REFRESH.

3) **Note:** The drive control mode is changed by the adapter module according to the operation mode requested by the master. However, it is recommended to set parameter 34.03 according to the primary operation mode. The value of parameter 34.03 does not change when the adapter module switches the drive control mode.

4) **Note:** In the rollover mode, the position data ranges always within one revolution (0…1 rev). When the linear mode is selected, the range of total revolutions depends on the setting of parameter 60.09.

5) **Note:** The position data size is always 32 bits total, and parameter 60.09 determines the number of bits used for the fractional part. For example, with value 24, there are 8 bits for integral revolutions (-128...127) and 24 bits for fractional part within the revolution.

Starting up ACS850 drives

1. Power up the drive.
2. Enable the communication between the adapter module and the drive by setting parameter 50.01 FBA enable to Enable.
3. Select application-specific values for parameters 50.04 and 50.05. The allowed values are listed in the table below.
4. Set the FECA-01 configuration parameters in drive parameter group 51. At the minimum, set 51.02 PROFILE according to the application.
5. Validate the settings made in parameter group 51 by setting parameter 51.27 FBA par refresh to Refresh.
6. Set the relevant drive control parameters to control the drive according to the application. If the CiA 402 profile is used, set and check all parameters as instructed in the table below.
7. **CiA 402 profile only:** If you intend to use the CiA 402 profile, do the following:
   - Select the desired operation mode for the adapter module and the drive in CoE object 0x6060 by modifying the object value via the master station. See section *Supported modes of operation* on page *64* and *Appendix A – CoE Object Dictionary*.
   - Take into use suitable PDOs for the operation mode in use. You can do this either via the default RxPDOs and TxPDOs as described in section *Process Data Objects* on page *87*, or you can create your own custom PDOs as well.

Parameter settings – ACS850

The ACS850 parameters and mandatory parameter settings for the EtherCAT fieldbus communication with the CiA 402 profile are listed in the following table.

Note: All other ACS850 parameters not mentioned in the table below are assumed to be at their default values.

Drive parameter	Setting for ACS850 drives	Description
50.01 Fba enable	Enable	Enables communication between the drive and the fieldbus adapter module.
50.04 Fb ref1 modesel	Torque Speed Raw data	Selects the source for fieldbus actual value 1 (feedback value).[1)]
50.05 Fb ref2 modesel	Torque Speed Raw data	Selects the source for fieldbus actual value 2 (feedback value).[1)]
50.06 Fb act1 tr src	P.1.01 Motor speed rpm P.1.06 Motor torque P.1.12 Pos act P.1.09 Encoder1 pos P.1.11 Encoder2 pos	Effective only if the Fb ref1 modesel parameter has been set to "Raw data". In that case: Selects the source for fieldbus actual value 1.[2)]
50.07 Fb act2 tr src	P.1.01 Motor speed rpm P.1.06 Motor torque P.1.12 Pos act P.1.09 Encoder1 pos P.1.11 Encoder2 pos	Effective only if the Fb ref2 modesel parameter has been set to "Raw data". In that case: Selects the source for fieldbus actual value 2.[2)]
51.02 FBA par2 (PROFILE)	**0** (= CiA 402)	Selects the CiA 402 profile.
51.27 FBA par refresh	Refresh	Validates the FECA-01 configuration parameter settings.
10.01 Ext1 start func	FB	Selects the fieldbus interface as the source of the start and stop commands for external control location 1.
10.10 Fault reset sel	P.FBA main cw.8	Selects the fieldbus interface as the source for the fault reset signal.

Drive parameter	Setting for ACS850 drives	Description
12.01 Ext1/Ext2 sel	C.False	Selects external control location EXT1.
12.03 Ext1 ctrl mode	Speed Torque	Selects the default (power up) drive control mode.[3]
21.01 Speed ref1 sel	FBA ref1	Selects the fieldbus reference 1 as the source for speed reference 1.
22.01 Acc/Dec sel	C.False	Mandatory setting
24.01 Torq ref1 sel	FBA ref1	Selects the fieldbus reference 1 as the source for torque reference 1.

[1] The data sources for the process feedback values are selected with the Fb ref1/2 modesel parameters. Two pieces of feedback can be selected. To get the position feedback, select "Raw data" and select the appropriate drive parameter in the corresponding Fb act1/2 tr src parameter.

[2] **Note:** After changing parameter 50.06 or 50.07, the settings must be read into the adapter module by using the parameter 51.27 FBA par refresh.

[3] **Note:** The drive control mode is changed by the adapter module according to the operation mode requested by the master. However, it is recommended to set parameter 12.03 according to the primary operation mode. The value of parameter 12.03 does not change when the adapter module switches the drive control mode.

Starting up ACS880 drives

1. Power up the drive.
2. Enable the communication between the adapter module and the drive by setting parameter 50.01 FBA A enable to Enable.
3. Select application-specific values for parameters 50.04 and 50.05. The allowed values are listed in the table below.
4. Set the FECA-01 configuration parameters in drive parameter group 51. At the minimum, set the value of parameter 51.02 Profile according to the application.
5. Validate the settings made in parameter group 51 by setting parameter 51.27 FBA par refresh to Configure.
6. Set the relevant drive control parameters to control the drive according to the application. If the CiA 402 profile is used, set and check all parameters as instructed in the table below.
7. **CiA 402 profile only:** If you intend to use the CiA 402 profile, do the following:
   - Select the desired operation mode for the adapter module and the drive in CoE object 0x6060 by modifying the object value via the master station. See section *Supported modes of operation* on page *64* and *Appendix A – CoE Object Dictionary*.
   - Take into use suitable PDOs for the operation mode in use. You can do this either via the default RxPDOs and TxPDOs as described in section *Process Data Objects* on page *87*, or you can create your own custom PDOs as well.

Parameter settings – ACS880

The ACS880 parameters and mandatory parameter settings for the EtherCAT fieldbus communication with the CiA 402 profile are listed in the following table.

Note: All other ACS880 parameters not mentioned in the table below are assumed to be at their default values.

Drive parameter	Setting for ACS880 drives	Description
50.01 FBA A enable	**1** = Enable	Enables communication between the drive and the fieldbus adapter module.
50.04 FBA A ref1 type	**3** = Torque **4** = Speed	Selects the source for fieldbus actual value 1 (feedback value).
50.05 FBA A ref2 type	**3** = Torque **4** = Speed	Selects the source for fieldbus actual value 2 (feedback value).
51.02 Profile	**0** = CiA 402	Selects the CiA 402 profile.
51.27 FBA par refresh	**1** = Configure	Validates the settings made in parameter group 51.
19.12 Ext1 control mode 1	**2** = Speed **3** = Torque	Selects the drive control mode. **Note:** The CiA 402 operation modes available depend on this setting. • When Torque has been selected, operation modes tq and cst are available. • When Speed has been selected, only the vl mode is available.
20.01 Ext1 commands	**12** = Fieldbus A	Start and stop commands for external control location EXT1 are taken from fieldbus adapter A.
20.02 Ext1 start trigger	**1** = Level	Mandatory setting
22.11 Speed ref1 selection	**4** = FB A ref1	Selects fieldbus adapter A reference value 1 as the source for speed reference 1.
26.11 Torque ref1 selection	**4** = FB A ref1	Selects fieldbus adapter A reference value 1 as the source for torque reference 1.

Drive parameter	**Setting for ACS880 drives**	**Description**
31.11 Fault reset selection	P.6.1.7	Selects the fieldbus interface as the source for the fault reset signal.

Configuring the master station

After the adapter module has been initialized by the drive, the master station must be prepared for communication with the module. Examples of an ABB AC500 PLC and Beckhoff's TwinCAT are given below. If you are using another master system, refer to its documentation for more information.

The examples can be applied to all drive types compatible with the module.

EtherCAT Slave Information files

EtherCAT Slave Information (ESI) files are XML files that specify the properties of the slave device for the EtherCAT master and contain information on the supported communication objects.

EtherCAT Slave Information files for ABB drives are available from the Document library (www.abb.com/drives).

Configuring an ABB AC500 PLC

This example shows how to configure communication between an ABB AC500 PLC and the adapter module using the ABB Control Builder Plus software.

Before you start, make sure that you have downloaded the ESI XML file from the Document library for your adapter module version and drive type (and drive license type with ACSM1).

1. Start the ABB Configurator software.
2. On the **Tools** menu, select **Device Repository**.

3. In the window that opens, click **Install** and browse for the ESI file downloaded from the Document library.

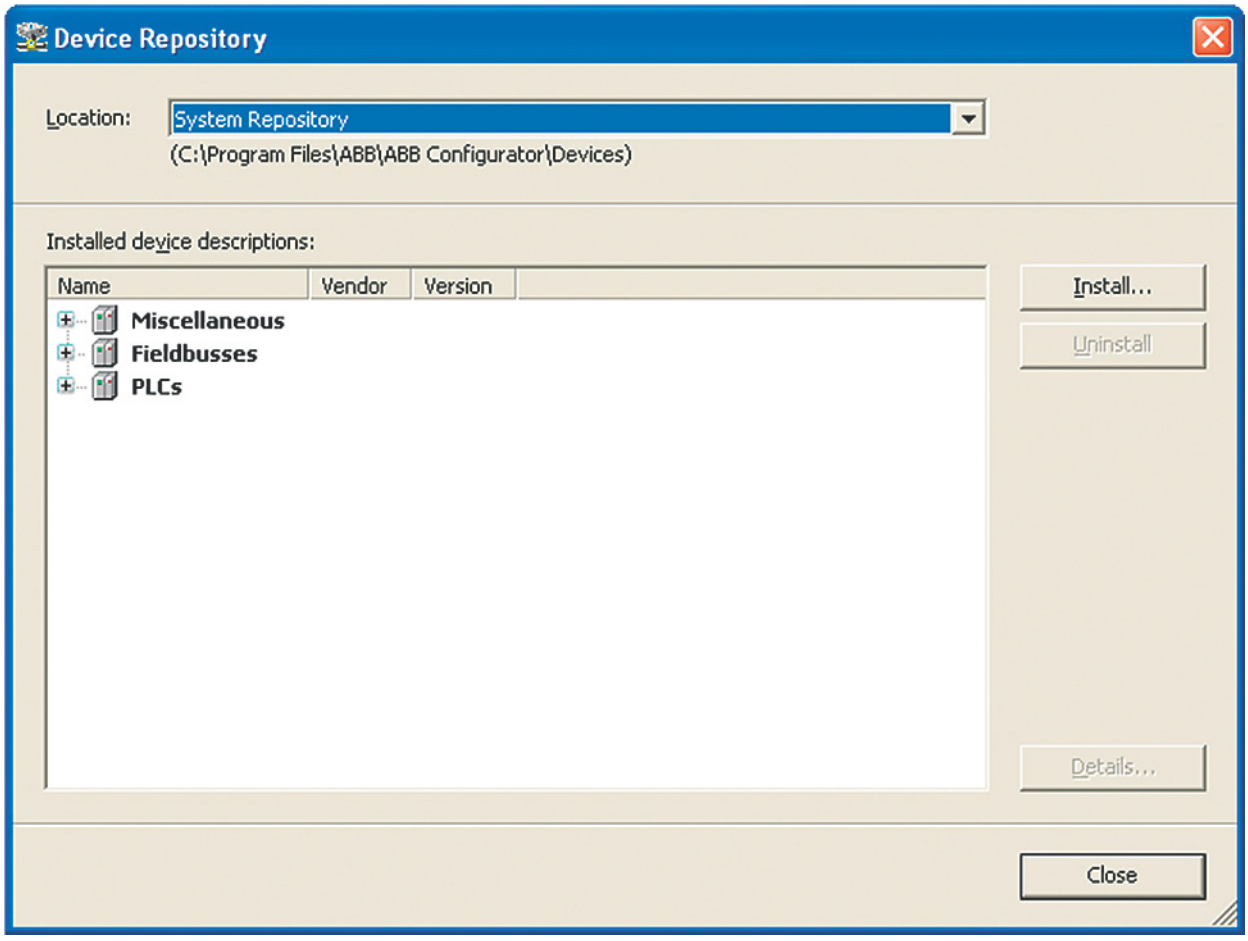

4. Open or create the PLC project that is used to control the drive.

5. Add the CM579-ECAT EtherCAT master device to the PLC project.

6. Add the FECA-01 module or the drive to the EtherCAT network.

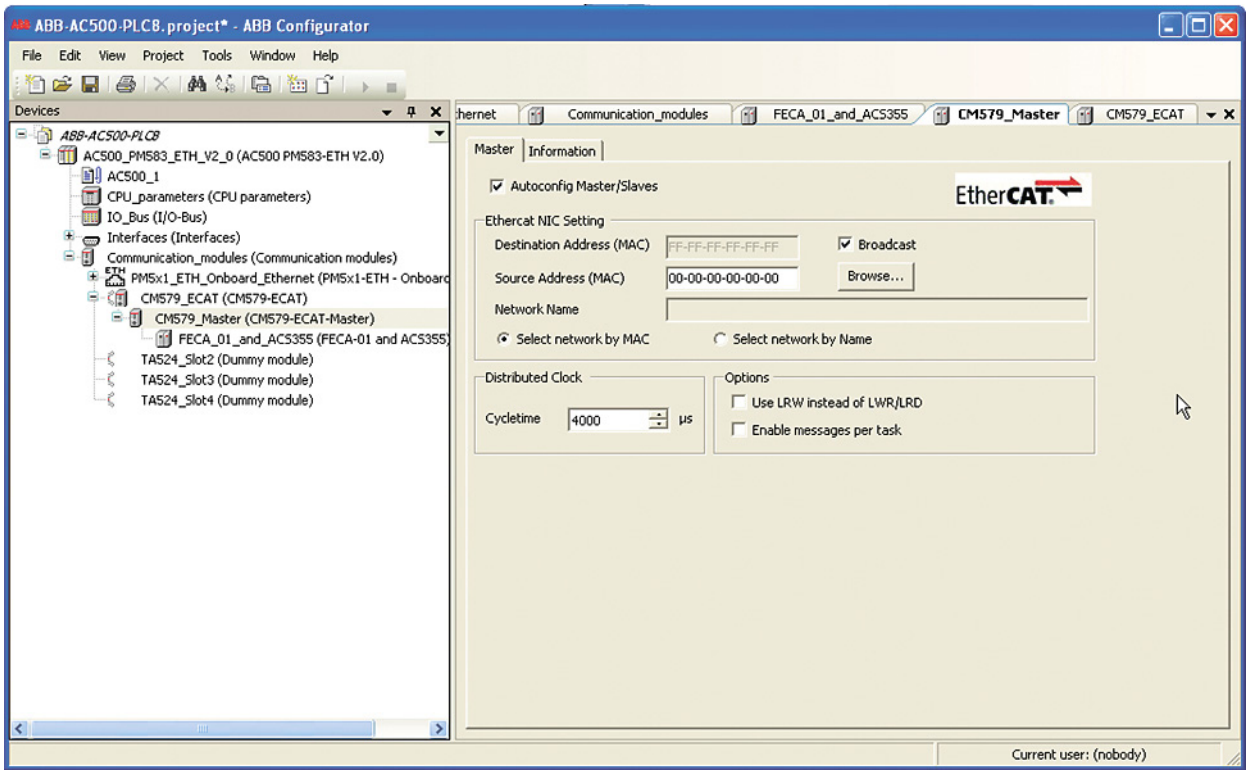

7. Define the CM579-ECAT master properties.

8. Define the FECA-01 properties.

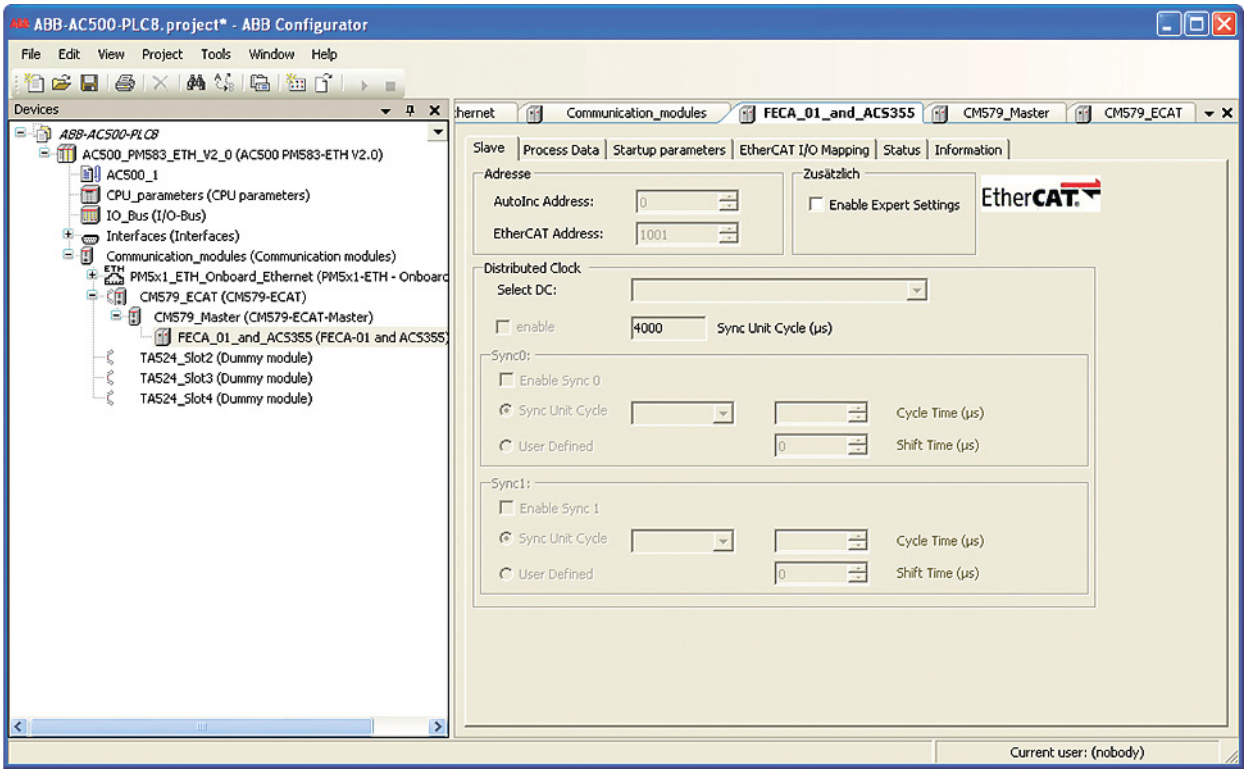

- On the **Process Data** tab, select the PDOs transferred between the PLC and drive.

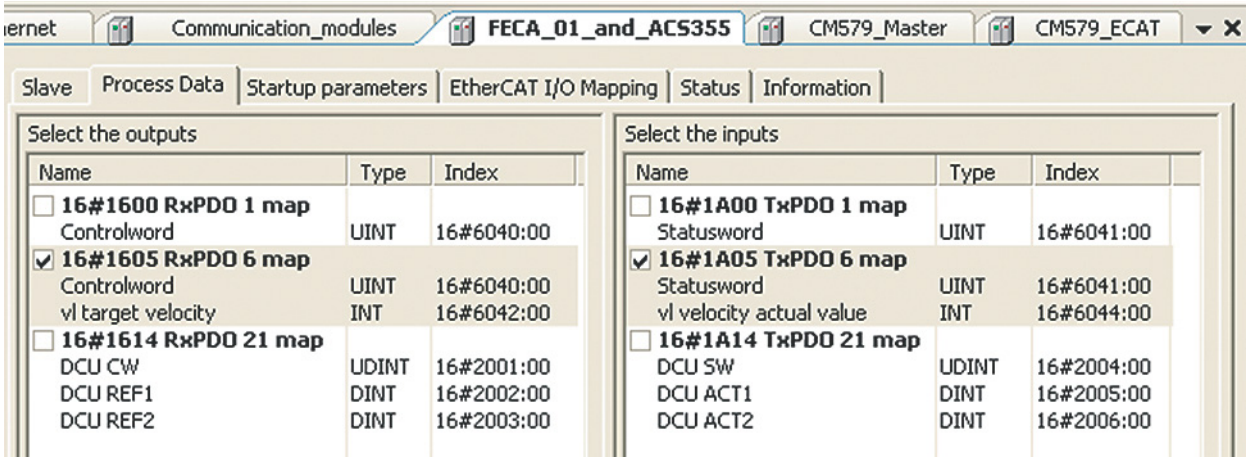

- On the **EtherCAT I/O Mapping** tab, type names for the variables that refer to the drive's signals in the PLC program.

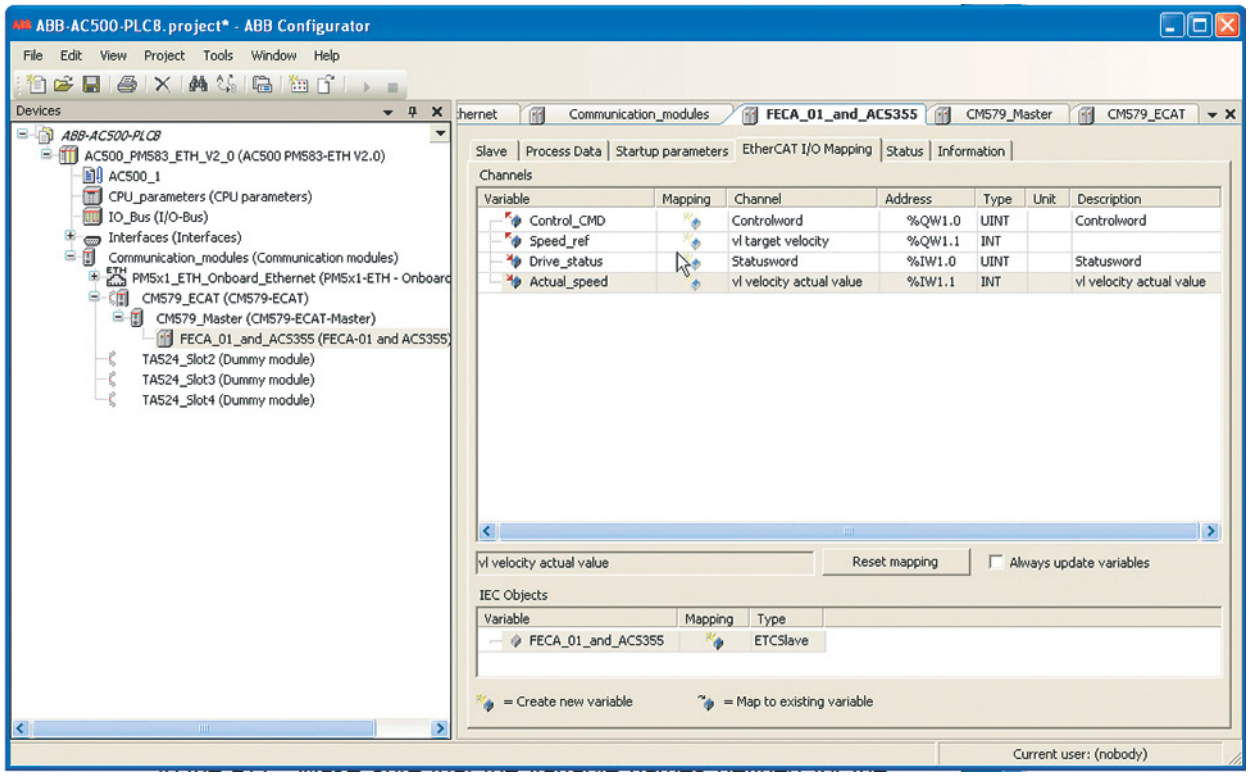

9. Open the PLC program, compile the project and download it to the PLC.

   Note: Make sure that the variable names defined for the drive's signals are used in the PLC program. Otherwise the communication will not work.

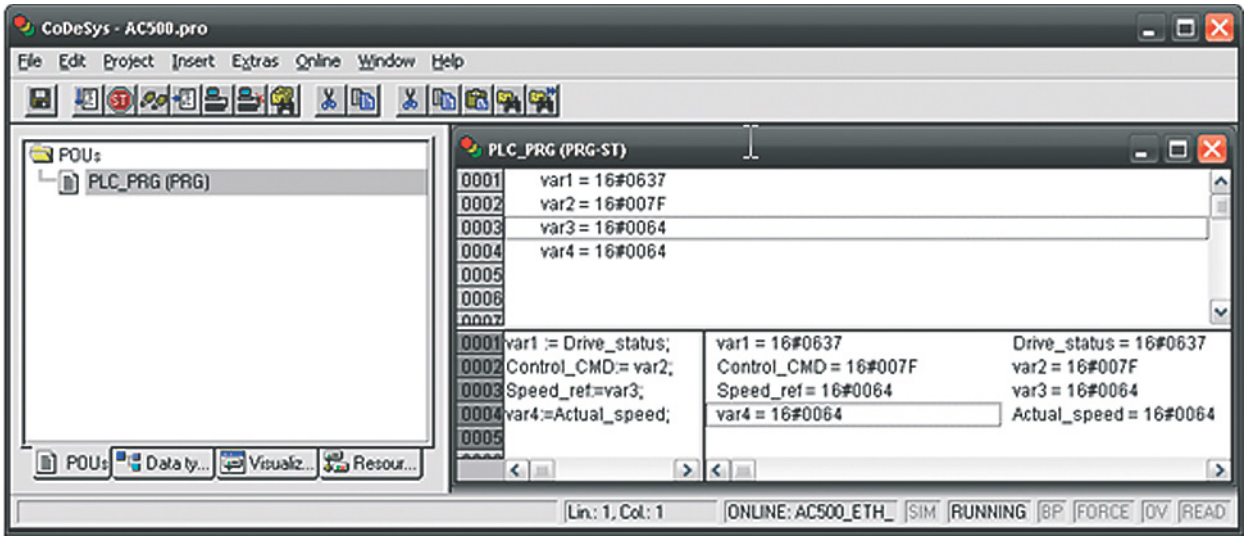

Configuring Beckhoff's TwinCAT

This example shows how to read in an existing network on TwinCAT System Manager.

Before you start, make sure that you have downloaded the ESI XML file from the Document library for your adapter module version and drive type (and drive license type with ACSM1).

1. Copy the ESI file into the \Io\EtherCAT directory under the TwinCAT installation directory (eg, C:\TwinCAT\Io\EtherCAT).
2. Start the TwinCAT System Manager.
3. Create a blank project if necessary (go to **File –> New**).
4. Set/Reset TwinCAT to Config Mode.
5. Add the EtherCAT device into the I/O Configuration.

   Right-click **I/O Devices** and select **Append Device…**.

   Expand the **EtherCAT** list and select **EtherCAT**.

   Click **Ok**.

6. Add the drive(s) to the network configuration by scanning the network.

   Right-click **Device 1 (EtherCAT)** and select **Scan Boxes…**.

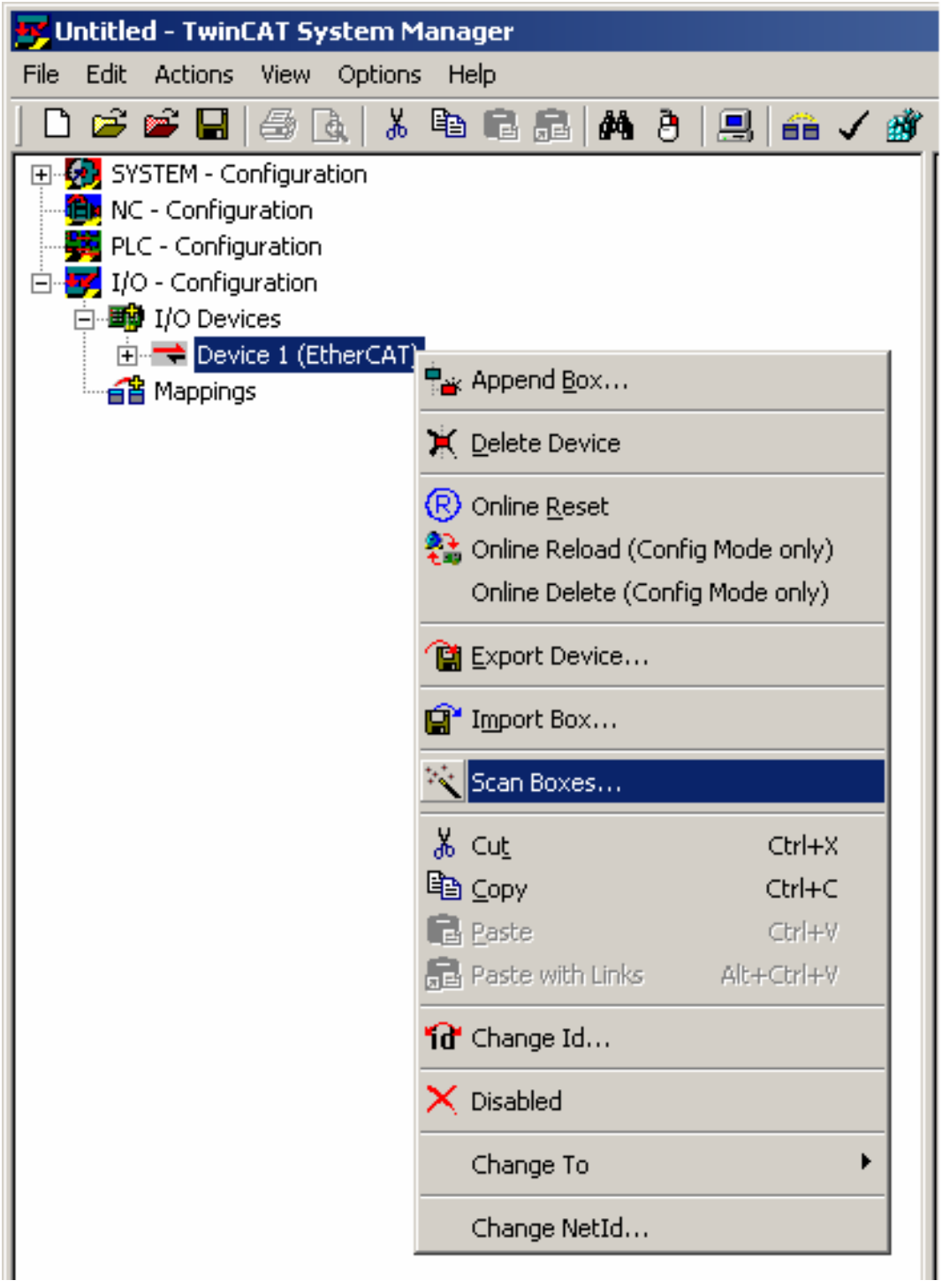

7. Select the drive, eg, **Drive 1 (FECA-01 and ACSM1 motion)**, and then select the **Process Data** tab of the drive.

   On this tab, you can configure and assign PDOs to Sync Managers.

   - Rx PDOs are transmitted from the master to the module.
   - Tx PDOs are transmitted from the module to the master.
   - Rx PDOs are assigned to Sync manager 2 (Outputs) and Tx PDOs are assigned to Sync manager 3 (Inputs).
   - By pressing the **Load PDO info from device** button, the current PDO configuration on the module is loaded into the TwinCAT System Manager with which the PDO configuration can be viewed.

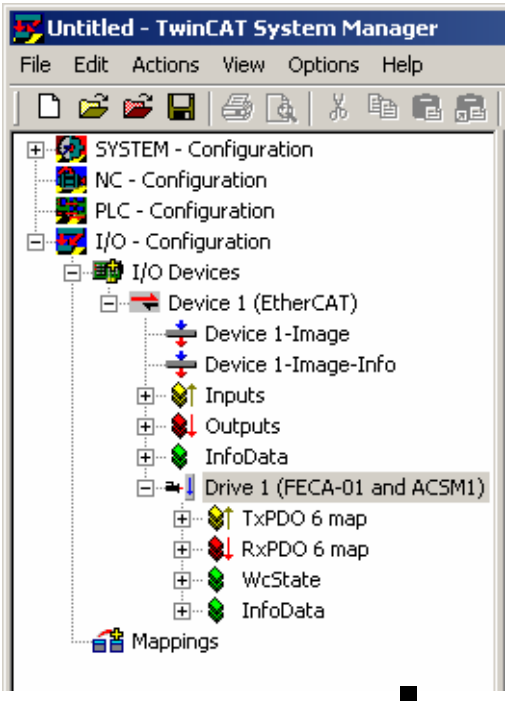
Untitled - TwinCAT System Manager
File Edit Actions View Options Help
SYSTEM - Configuration
NC - Configuration
PLC - Configuration
I/O - Configuration
I/O Devices
Device 1 (EtherCAT)
Device 1-Image
Device 1-Image-Info
Inputs
Outputs
InfoData
Drive 1 (FECA-01 and ACSM1)
TxPDO 6 map
RxPDO 6 map
WcState
InfoData
Mappings

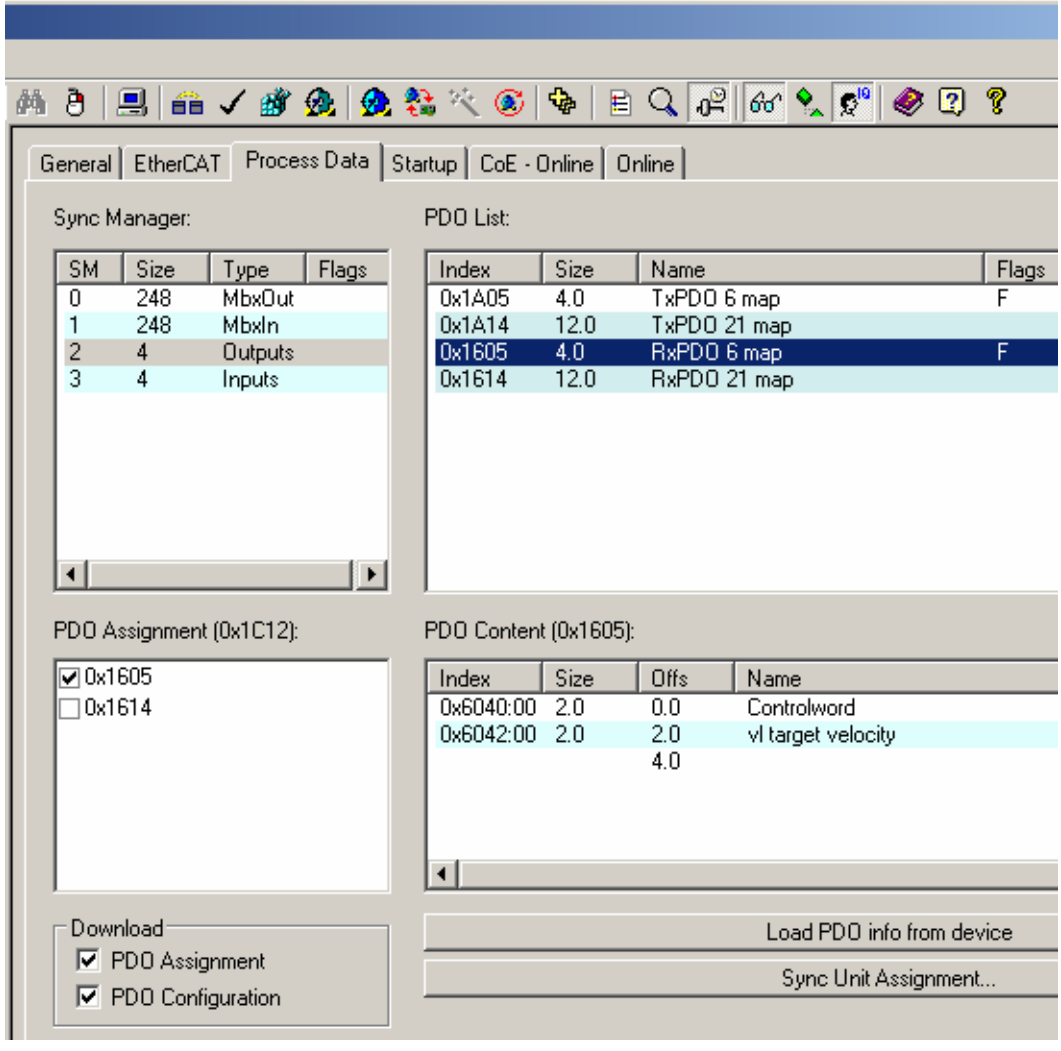
General
EtherCAT
Process Data
Startup
CoE - Online
Online
Sync Manager:
SM Size Type Flags
0 248 MbxOut
1 248 MbxIn
2 4 Outputs
3 4 Inputs
PDO List:
Index Size Name Flags
0x1A05 4.0 TxPDO 6 map F
0x1A14 12.0 TxPDO 21 map
0x1605 4.0 RxPDO 6 map F
0x1614 12.0 RxPDO 21 map
PDO Assignment (0x1C12):
0x1605
0x1614
PDO Content (0x1605):
Index Size Offs Name
0x6040:00 2.0 0.0 Controlword
0x6042:00 2.0 2.0 vl target velocity
4.0
Download
PDO Assignment
PDO Configuration
Load PDO info from device
Sync Unit Assignment...

8. Perform the PDO configuration as follows:
   - In the **PDO List** box, select a PDO.
   - In the **PDO Content** box, edit the object mapping of the selected PDO.
   - In the **Sync Manager** and **PDO Assignment** boxes, assign the selected PDOs to the Sync managers.
   - Check that the **PDO Assignment** and **PDO Configuration** check boxes are selected to make TwinCAT transfer the configuration to the module when the network is started. In the Config Mode, the network can be restarted by reloading the I/O devices (by pressing F4).

9. Create a task in TwinCAT: Right-click **Additional Tasks** and select **Append task**. Link the adapter module's inputs and outputs to the appended task's input and output variables.

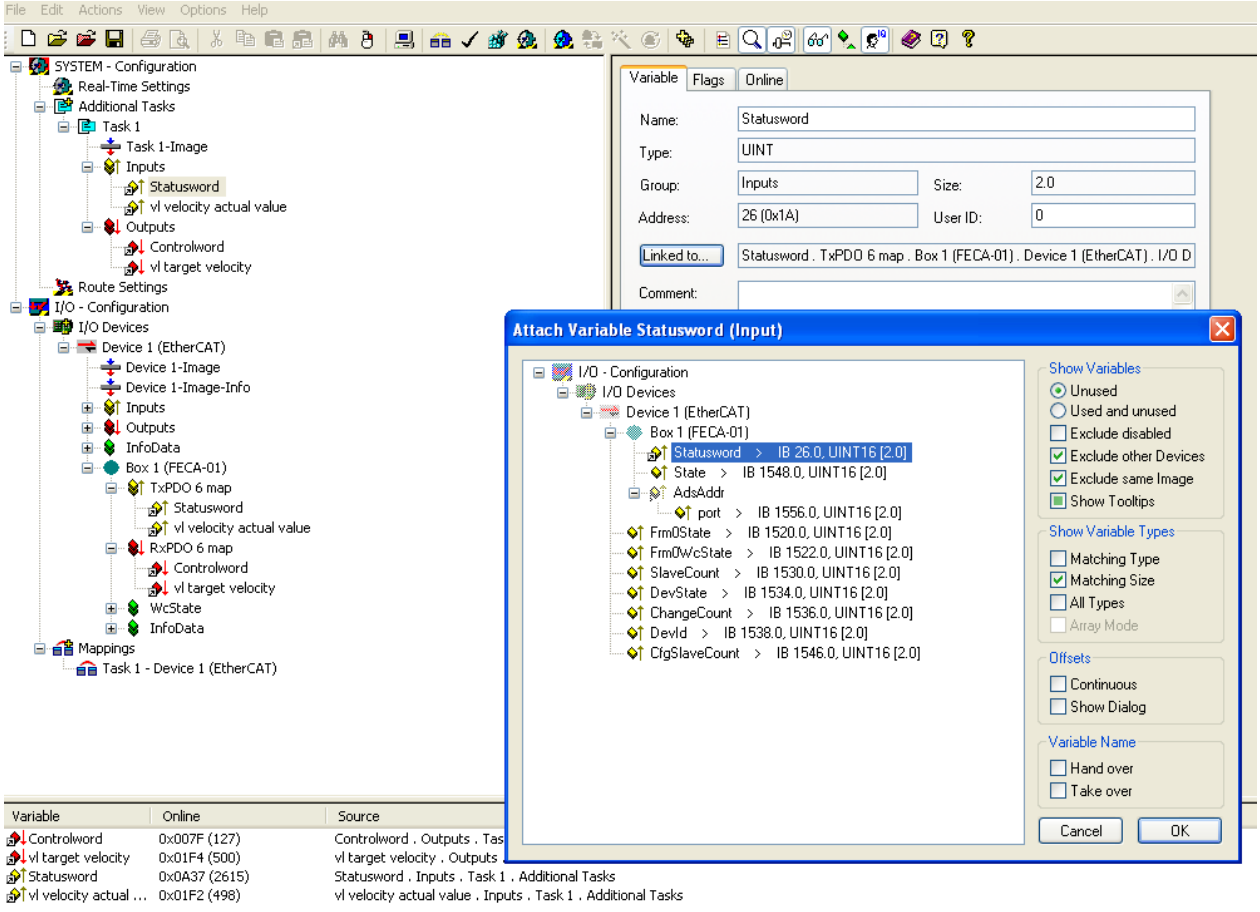

10. If you want the device to go automatically to the OPERATIONAL state after the TwinCAT configuration has been activated, select **Additional Tasks** -> **Task 1.** Then, on the **Task** tab, select the **Auto start** check box.

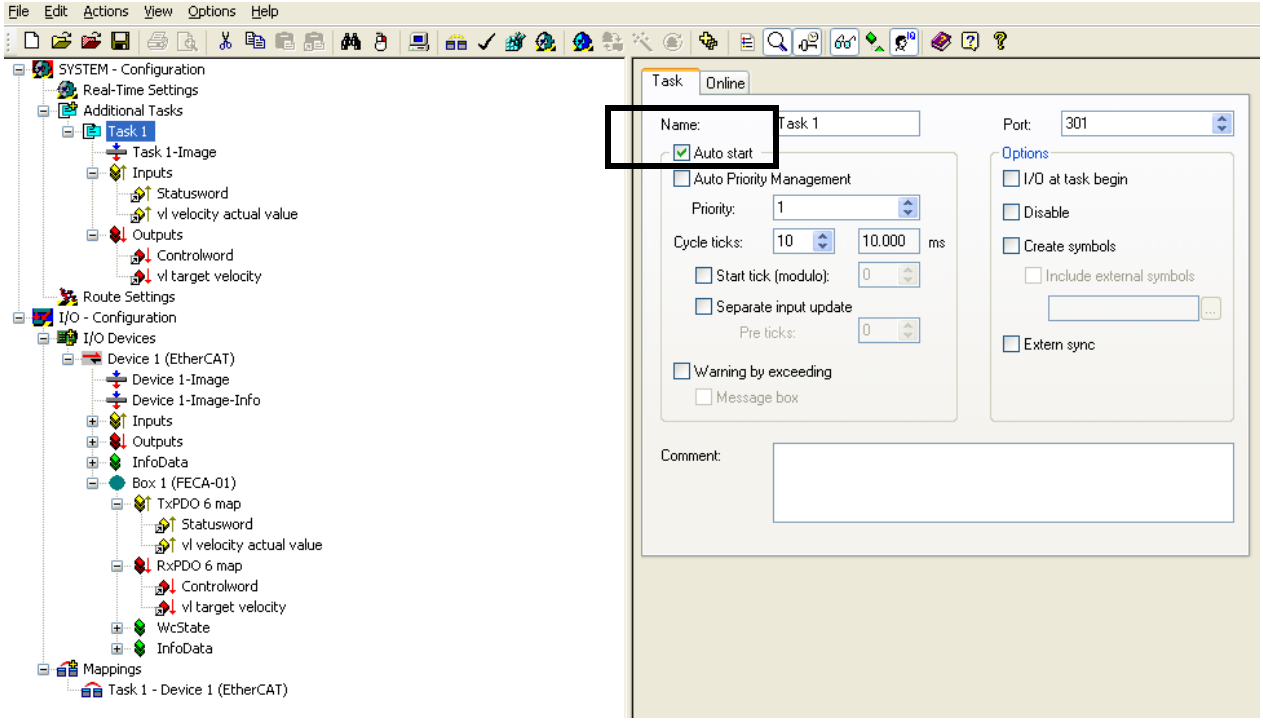

11. Change the TwinCAT configuration state using the buttons shown below. For example, take FECA-01 and the drive into the OPERATIONAL mode.

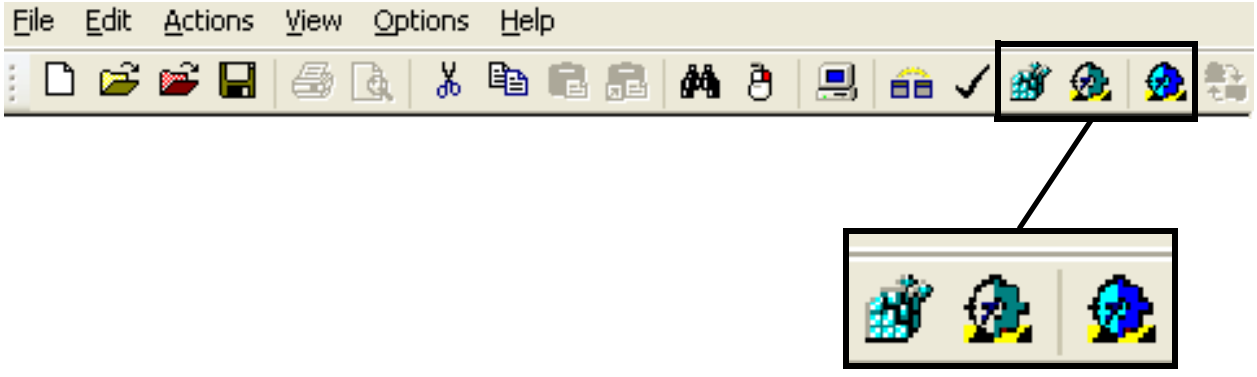

7

Communication profiles

What this chapter contains

This chapter describes the communication profiles used in the communication between the EtherCAT network, the adapter module and the drive.

Communication profiles

Communication profiles are ways of conveying control commands (Control word, Status word, references and actual values) between the master station and the drive.

With the FECA-01 module, the master may employ either the CANopen CiA 402 (Device Profile Drives and Motion Control) profile or the ABB Drives profile. Both are converted to the native profile (eg, DCU or FBA) by the adapter module. In addition, a Transparent profile is available. With the Transparent mode, no data conversion takes place in the module.

The profile is selected from the drive with parameter 02 PROFILE in the fieldbus configuration group 1. For example, if parameter 02 PROFILE is set to 0 (CiA 402), the CiA 402 profile is used.

The following sections describe the Control word, the Status word, references and actual values for the CANopen device profile CiA 402 and ABB Drives communication profile. See the drive manuals for details on the native communication profiles.

CANopen device profile CiA 402

The CiA 402 profile is a standardized device profile used for digital controlled motion products (for example, drives) and is part of the CANopen specification. Additional information can be obtained at www.can-cia.org.

Device control state machine

The start and stop of the drive and several mode-specific commands are executed by the device control state machine. This is described in the figure in *Control word and Status word of the CiA 402 profile*.

The Control word is the principal means for controlling the drive from a fieldbus system. It is sent by the fieldbus master to the drive through the adapter module. The drive switches between its states according to the bit-coded instructions in the Control word, and returns status information to the master in the Status word.

Supported modes of operation

The CiA 402 profile offers several modes of operation. These modes define the operation of the drive. The CiA 402 operation modes are supported by the drives as follows:

Operation mode	ACSM1 motion	ACSM1 speed	ACS850	ACS355	ACS880
Velocity mode	vl	vl	vl	vl	vl
Profile torque mode	tq	tq	tq	tq	tq
Profile velocity mode	pv				
Profile position mode	pp				
Homing mode	hm				
Cyclic synchronous torque mode	cst	cst	cst	cst	cst
Cyclic synchronous velocity mode	csv	csv	csv		
Cyclic synchronous position mode	csp				

Note: Drive synchronization is supported only with ACSM1 drives.

In this section, the scalings of the reference and actual values are described for each operation mode. Operation mode -specific objects are defined in *Appendix A – CoE Object Dictionary*. The current operation mode is displayed in object 0x6061, and it can be changed using object 0x6060.

Homing mode

The homing mode describes various methods of finding a home position, or a zero point. The switches pointing the home position can be located at the ends or in the middle of the path that the moving object is travelling. Most of the methods also use the index (zero) pulse from an incremental encoder. For more information on the homing mode and descriptions of the various homing methods, see the drive manual.

Profile position mode

The profile position mode enables the positioning of the drive to be controlled. The setting of position set-points is controlled by the new set-point and the change sets immediately bits in the Control word as well as the set-point acknowledge bit in the Status word.

The position command value is object 0x607A Target position (inc).

Profile velocity mode

In the profile velocity operation mode, the module uses the profile velocity control mode of the drive, instead of the Speed control mode. The profile velocity control mode is available only in an ACSM1 drive equipped with Motion Control Program.

The velocity command value is object 0x60FF Target velocity (inc/s).

Profile torque mode

In the profile torque operation mode, the target torque value is processed via a trajectory generator on the adapter module, which generates a linear ramp on the torque command value to the drive.

The torque command value is object 0x6071 Target torque (0.1%). The torque ramp slope is set with object 0x6087 Torque slope (0.1% / s).

Velocity mode

The velocity mode is the basic mode to control the velocity of the drive with limits and ramp functions.

The velocity command value is object 0x6042 vl target velocity (rpm).

Note: In the velocity operation mode, the operation is governed by a different set of objects than in other operation modes, namely: 0x6046 vl velocity min max amount, 0x6048 vl velocity acceleration, 0x6049 vl velocity deceleration, 0x604A vl velocity quick stop and 0x604C vl dimension factor.

Cyclic synchronous position mode

With this mode, the trajectory generator is located in the master, not in the drive. The master provides target position values cyclically and synchronously to the drive that performs position, velocity and torque control.

The position command value is object 0x607A Target position.

Cyclic synchronous velocity mode

With this mode, the trajectory generator is located in the master, not in the drive. The master provides target velocity values cyclically and synchronously to the drive that performs velocity and torque control.

The velocity command value is object 0x60FF Target velocity.

Cyclic synchronous torque mode

With the cyclic synchronous torque mode, the master provides target torque values cyclically and synchronously to the drive that performs torque control.

The torque command value is object 0x6071 Target torque.

Process data scaling with the CiA 402 profile

Torque data

Torque data is expressed in 0.1% of nominal torque, eg, value 10 = 1% torque.

Velocity data

Velocity data is expressed in position increments per second (inc/s). Additionally, a rational factor by which the velocity data is scaled can be set by object 0x6094 Velocity encoder factor.

The scaling for the velocity mode is different from other velocity data. Velocity data for the velocity operation mode is expressed in axis revolutions per minute (rpm). Additionally, a rational factor by which the velocity data will be scaled can be set by object 0x604C vl dimension factor.

Position data

Position data is expressed in position increments (inc). The position scale is specified with object 0x608F Position encoder resolution (number of position increments per specified number of axis revolutions; inc/rev). Additionally, a rational factor by which all position data will be scaled can be set by object 0x6093 Position factor.

Process feedback values in the CiA 402 profile

Feedback values for control purposes are available in the following objects:

- 0x6077 Torque actual value
- 0x6044 vl velocity actual value
- 0x606C Velocity actual value
- 0x6064 Position actual value.

For the objects to be operational, the drive must be configured to transmit the corresponding feedback data to the adapter module.

Control word and Status word of the CiA 402 profile

The functionality of the Control word is described in the following tables. The Control word described in the table below can be found in CoE object 0x6040 Controlword and the Status word in CoE object 0x6041 Statusword (see *Appendix A – CoE Object Dictionary*).

Bit	Description
0	Switch on
1	Enable voltage
2	Quick stop
3	Enable operation
4…6	Operation mode specific
7	Fault reset
8	Halt
9	Operation mode specific
10	Reserved
11…15	Drive specific

The operation mode specific bits of the Control word of the CiA 402 profile are listed in the table below:

Bit	Velocity mode	Profile position mode	Profile velocity mode	Profile torque mode	Homing mode
4	Ramp function generator enable	New set point	Reserved	Reserved	Homing operation start
5	Ramp function generator unlock	Change set immediately	Reserved	Reserved	Reserved
6	Ramp function generator use ref.	Absolute / relative	Reserved	Reserved	Reserved

The CiA 402 state machine is controlled by commands issued via Control word bits 7, 3…0. The commands are listed in the table below:

Control word bit						
Command	**Fault reset bit 7**	**Enable operation bit 3**	**Quick Stop bit 2**	**Enable voltage bit 1**	**Switch on bit 0**	**State transitions**[1)]
Shutdown	0	X	1	1	0	2, 6, 8
Switch on	0	0	1	1	1	3
Switch on	0	1	1	1	1	3 (+4)[2)]
Disable voltage	0	X	X	0	X	7, 9, 10, 12
Quick stop	0	X	0	1	X	7, 10, 11
Disable operation	0	0	1	1	1	5
Enable operation	0	1	1	1	1	4
Fault reset	↑	X	X	X	X	15

X: Bits marked with X are irrelevant

[1)] See the figure on the state machine of the CiA 402 communication profile placed further in this section.

[2)] When Control word bit 3 (Enable operation) is 1, the drive does not stay in the SWITCHED ON state, but immediately moves to state OPERATION ENABLED.

The following table describes the functionality of the Status word of the CiA 402 profile:

Bit	Name	Value	Description
0	Ready to switch on	0	Not ready to switch on
		1	Ready to switch on
1	Switched on	0	Not switched on
		1	Switched on
2	Operation enabled	0	Operation not enabled
		1	Operation enabled
3	Fault	0	No fault
		1	Fault
4	Voltage enabled	0	No high voltage applied to the drive
		1	High voltage applied to the drive
5	Quick stop	0	Quick stop is active
		1	Normal operation
6	Switch on disabled	0	Switch on enabled
		1	Switch on disabled
7	Warning	0	No warning/alarms
		1	Warning/Alarm is active
8	Drive-specific	0	
		1	
9	Remote	0	Controlword is not processed
		1	Controlword is processed
10	Target reached	0	Set-point not reached
		1	Set-point reached
11	Internal limit active	0	Internal limit not active
		1	Internal limit active
12…13	Operation mode specific		

Bit	Name	Value	Description
14…15	Drive specific	0	
		1	

The following table describes the operation mode specific bits of the Status word of the CiA 402 profile:

Bit	Velocity mode	Profile position mode	Profile velocity mode	Profile torque mode	Homing mode
12	Reserved	Set-point acknowledgement	Speed	Reserved	Homing attained
13	Reserved	Following error	Max slippage error	Reserved	Homing error

The following figure describes the state machine of the CiA 402 communication profile.

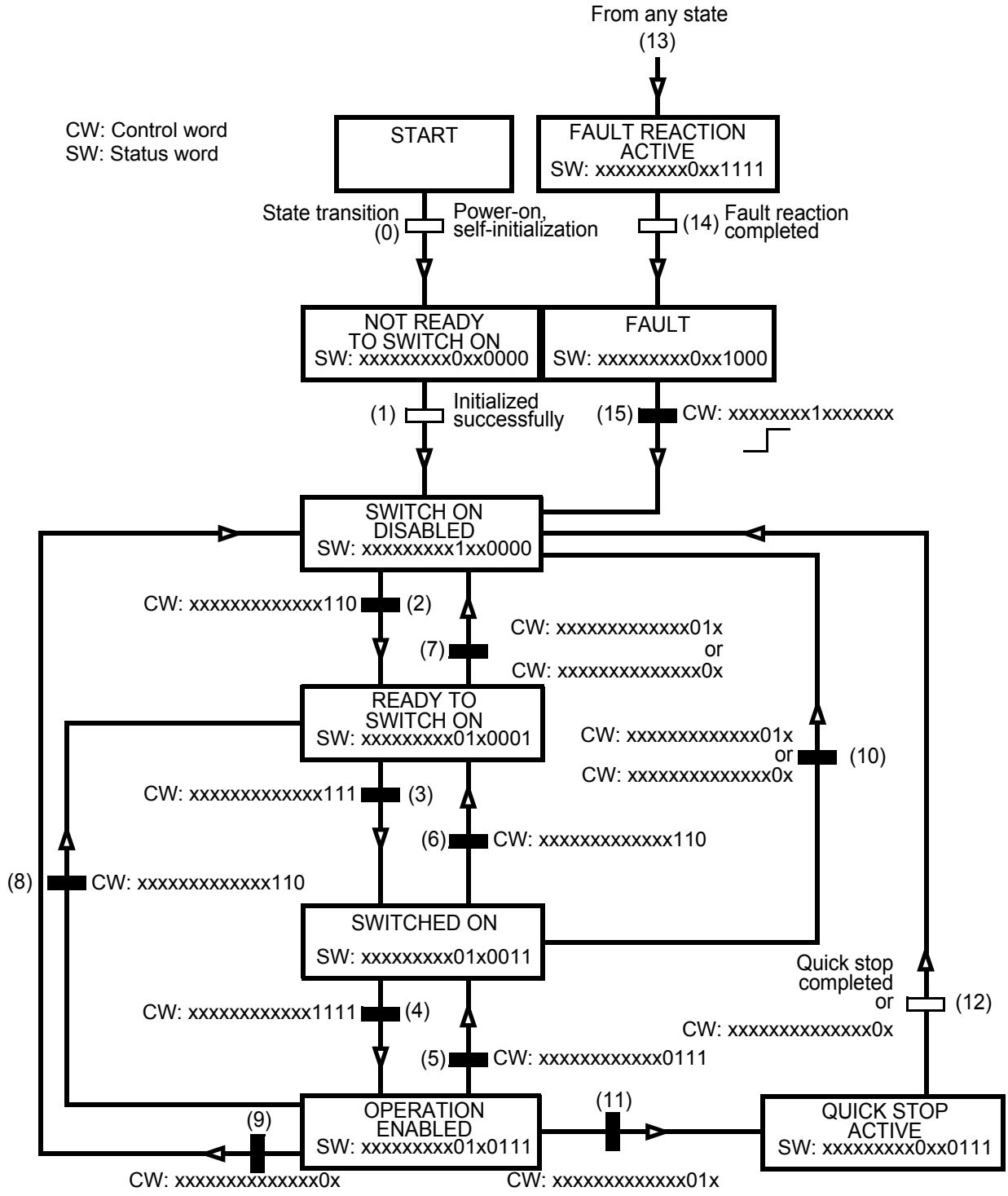

ABB Drives communication profile

Control word and Status word

The Control word is the principal means for controlling the drive from a fieldbus system. It is sent by the fieldbus master station to the drive through the adapter module. The drive switches between its states according to the bit-coded instructions in the Control word and returns status information to the client in the Status word.

The contents of the Control word and the Status word are detailed below. The drive states are presented on page 78. The ABB Drives Control word can be found in CoE object 0x2101 and the ABB Drives Status word in CoE object 0x2104.

Control word contents

The table below shows the contents of the Control word for the ABB Drives communication profile. The upper case boldface text refers to the states shown in the state machine on page 78.

Bit	Name	Value	Description
0	OFF1_CONTROL	1	Proceed to **READY TO OPERATE**.
		0	Stop along the currently active deceleration ramp. Proceed to **OFF1 ACTIVE**; proceed to **READY TO SWITCH ON** unless other interlocks (OFF2, OFF3) are active.
1	OFF2_CONTROL	1	Continue operation (OFF2 inactive).
		0	Emergency OFF, coast to stop. Proceed to **OFF2 ACTIVE**, proceed to **SWITCH-ON INHIBITED**.

Bit	Name	Value	Description
2	OFF3_CONTROL	1	Continue operation (OFF3 inactive).
		0	Emergency stop, stop within the time defined by the drive parameter. Proceed to **OFF3 ACTIVE**; proceed to **SWITCH-ON INHIBITED**. **Warning:** Ensure that the motor and driven machine can be stopped using this stop mode.
3	INHIBIT_OPERATION	1	Proceed to **OPERATION ENABLED**. **Note:** The Run enable signal must be active; see the drive manuals. If the drive is set to receive the Run enable signal from the fieldbus, this bit activates the signal.
		0	Inhibit operation. Proceed to **OPERATION INHIBITED**.
4	RAMP_OUT_ZERO	1	Normal operation. Proceed to **RAMP FUNCTION GENERATOR: OUTPUT ENABLED**.
		0	Force the Ramp Function Generator output to go to zero. The drive ramps the speed down to zero and stops (keeping the current and DC voltage limits in force).
5	RAMP_HOLD	1	Enable the ramp function. Proceed to **RAMP FUNCTION GENERATOR: ACCELERATOR ENABLED**.
		0	Halt ramping (Ramp Function Generator output held).

Bit	Name	Value	Description
6	RAMP_IN_ZERO	1	Normal operation. Proceed to **OPERATION**. **Note:** This is effective only if the fieldbus interface is set as the source for this signal by drive parameters.
		0	Force the Ramp Function Generator input to zero.
7	RESET	0=>1	A fault is reset if an active fault exists. Proceed to **SWITCH-ON INHIBITED**. **Note:** This is effective only if the fieldbus interface is set as the source for this signal by drive parameters.
		0	Continue normal operation.
8…9	Reserved		
10	REMOTE_CMD	1	Fieldbus control is enabled.
		0	Control word and reference not getting through to the drive, except for CW bits OFF1, OFF2 and OFF3.
11	EXT_CTRL_LOC	1	Select External Control Location EXT2. This is effective if the control location is parametrized to be selected from the fieldbus.
		0	Select External Control Location EXT1. This is effective if the control location is parametrized to be selected from fieldbus.
12…15	Reserved		

Status word contents

The table below shows the contents of the Status word for the ABB Drives communication profile. The upper case boldface text refers to the states shown in the state machine on page 78.

Bit	Name	Value	Description
0	RDY_ON	1	**READY TO SWITCH ON**
		0	**NOT READY TO SWITCH ON**
1	RDY_RUN	1	**READY TO OPERATE**
		0	**OFF1 ACTIVE**
2	RDY_REF	1	**OPERATION ENABLED**
		0	**OPERATION INHIBITED**
3	TRIPPED	1	**FAULT**
		0	No fault
4	OFF_2_STA	1	OFF2 inactive
		0	**OFF2 ACTIVE**
5	OFF_3_STA	1	OFF3 inactive
		0	**OFF3 ACTIVE**
6	SWC_ON_INHIB	1	**SWITCH-ON INHIBITED**
		0	-
7	ALARM	1	Warning / alarm
		0	No warning / alarm
8	AT_SETPOINT	1	**OPERATION**. The actual value equals reference = is within tolerance limits, ie, the speed control, speed error is 10% max of the nominal motor speed.
		0	The actual value differs from reference = is outside tolerance limits.
9	REMOTE	1	Drive control location: REMOTE (EXT1 or EXT2)
		0	Drive control location: LOCAL

Bit	Name	Value	Description
10	ABOVE_LIMIT	1	The actual frequency or speed equals or exceeds supervision limit (set by the drive parameter). This is valid in both directions of rotation.
		0	The actual frequency or speed is within the supervision limit.
11	EXT_CTRL_LOC	1	External Control Location EXT2 selected **Note concerning ACS880:** This bit is effective only if the fieldbus interface is set as the target for this signal by drive parameters. User bit 0 selection (06.33).
		0	External Control Location EXT1 selected
12	EXT_RUN_ENABLE	1	External Run Enable signal received **Note concerning ACS880:** This bit is effective only if the fieldbus interface is set as the target for this signal by drive parameters. User bit 1 selection (06.34).
		0	No External Run Enable signal received
13 …14	Reserved		
15	FBA_ERROR	1	A communication error is detected by the adapter module.
		0	The fieldbus adapter communication is OK.

State machine

The state machine for the ABB Drives communication profile is shown below.

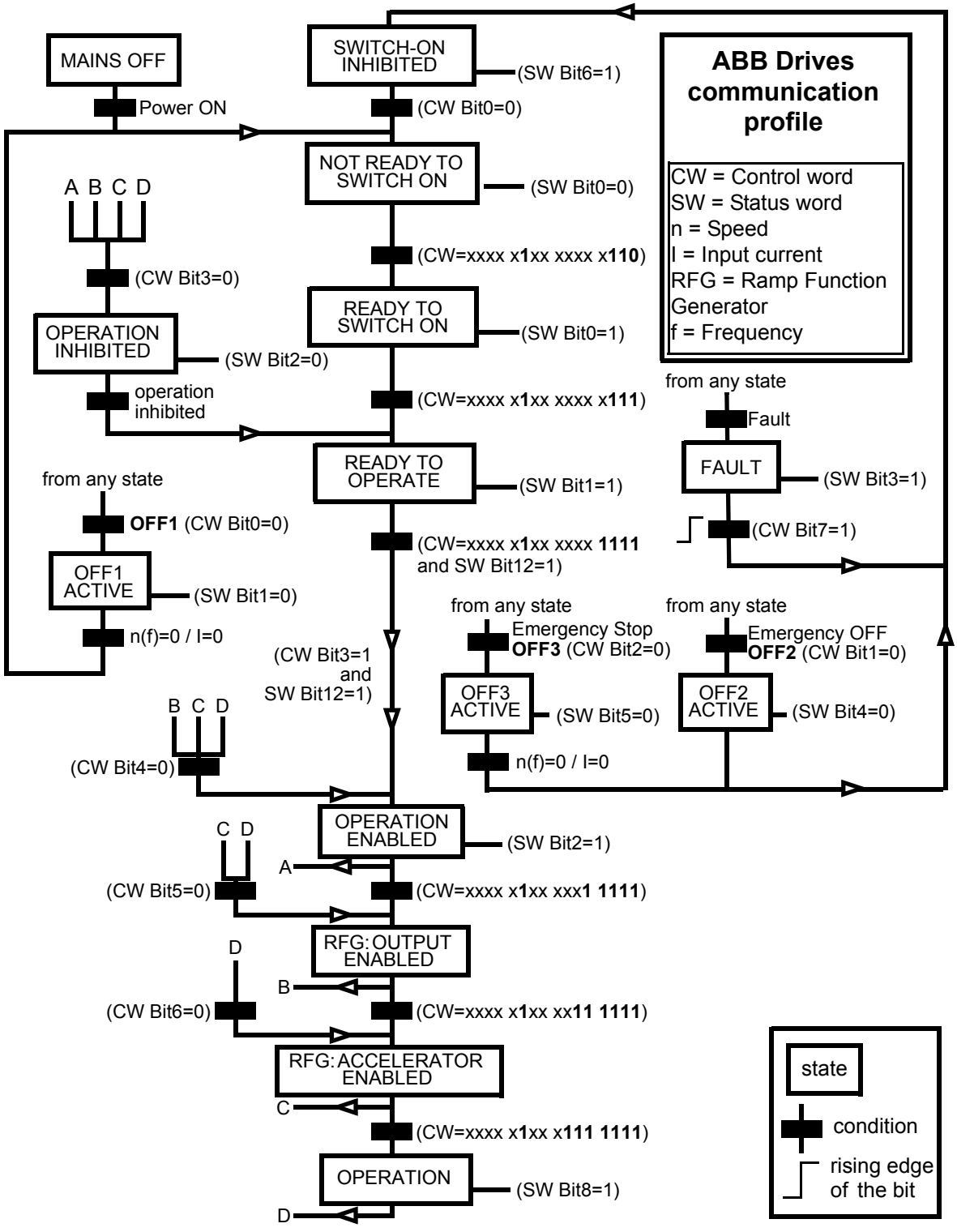

References

References are 16-bit words containing a sign bit and a 15-bit integer. A negative reference (indicating reversed direction of rotation) is formed by calculating the two's complement from the corresponding positive reference. The ABB Drives profile references can be found in CoE objects 0x2102 (ABB Drives REF1) and 0x2103 (ABB Drives REF2).

ABB drives can receive control information from multiple sources including analog and digital inputs, the drive control panel and the communication module (for example, FECA-01). To have the drive controlled through the fieldbus, the adapter module must be defined as the source for control information, for example, reference.

Scaling

References are scaled as shown below.

Note: The values of REF1 MAX and REF2 MAX are set with drive parameters. See the drive manuals for further information.

In ACSM1, ACS850 and ACS880, the speed reference (REFx) in decimal (0…20000) corresponds to 0…100% of the speed scaling value.

Note: Drive parameter REFx MIN may limit the actual minimum reference.

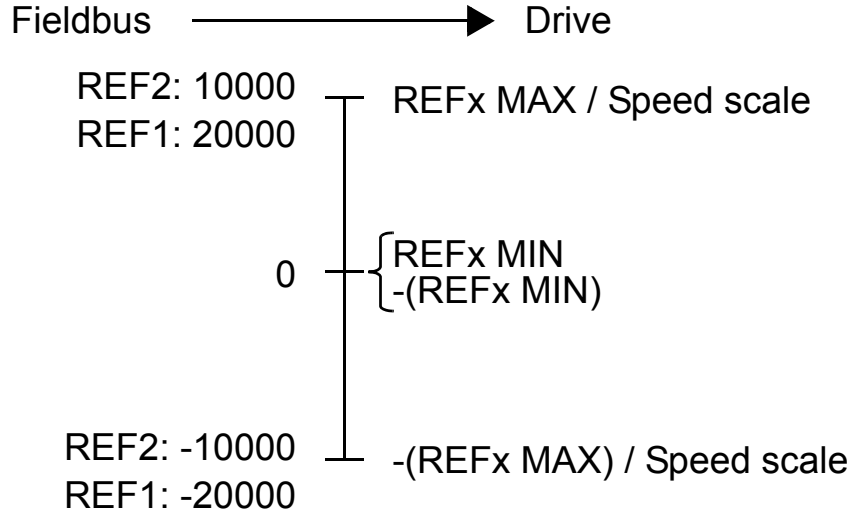

Actual values

Actual values are 16-bit words containing information on the operation of the drive. The functions to be monitored are selected with a drive parameter. The ABB Drives profile actual values can be found in CoE objects 0x2105 (ABB Drives ACT1) and 0x2106 (ABB Drives ACT2).

Scaling

Actual values are scaled as shown below.

Note: The values of REF1 MAX and REF2 MAX are set by drive parameters. See the drive manuals for further information.

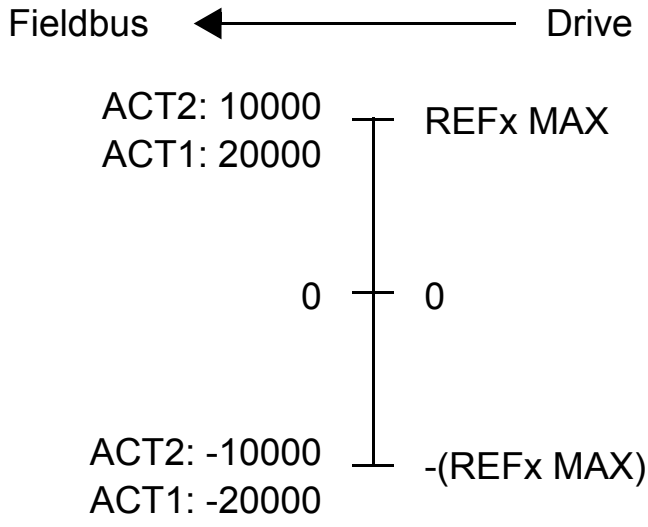

8

Communication protocol

What this chapter contains

This chapter describes the communication on an EtherCAT network.

EtherCAT frame structure

In EtherCAT, the data between the master and the slaves is transmitted in Ethernet frames. An EtherCAT Ethernet frame consists of one or several EtherCAT telegrams, each addressing individual devices and/or memory areas. The telegrams can be transported either directly in the data area of the Ethernet frame or within the data section of a UDP datagram transported via IP.

The EtherCAT frame structure is pictured in the following figure. Each EtherCAT telegram consists of an EtherCAT header, the data area and a working counter, which is incremented by all EtherCAT nodes that are addressed by the telegram and have exchanged associated data.

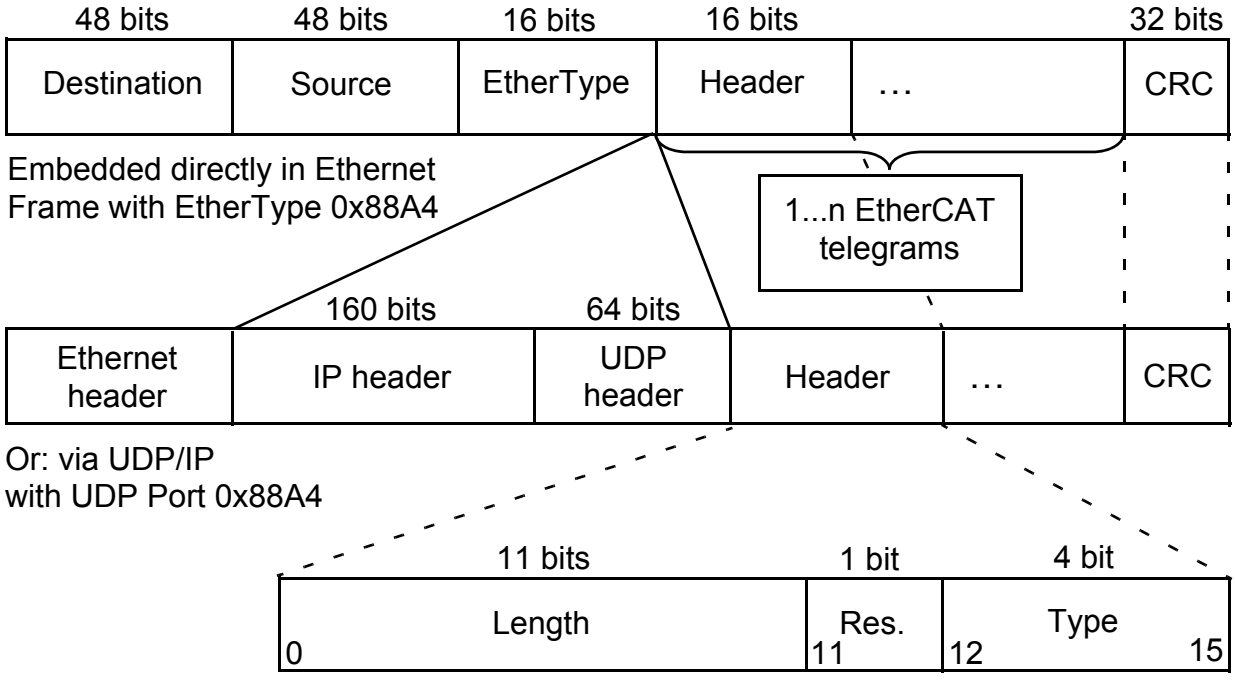

EtherCAT services

EtherCAT specifies services for reading and writing data from the physical memory within the slaves. The adapter module supports the following EtherCAT services:

- Auto increment physical read (APRD)
- Auto increment physical write (APWR)
- Auto increment physical read write (APRW)
- Configured address read (FPRD)
- Configured address write (FPWR)
- Configured address read write (FPRW)
- Broadcast read (BRD)
- Broadcast write (BWR)
- Logical read (LRD)
- Logical write (LWR

- Logical read write (LRW)
- Auto increment physical read multiple write (ARMW)
- Configured address read multiple write (FRMW).

Addressing modes and FMMUs

There are a number of different addressing modes which can be used by the master to communicate with EtherCAT slaves. As a full slave, the adapter module supports the following addressing modes:

- Position addressing

  The slave device is addressed via its physical position in the EtherCAT segment.
- Node addressing

  The slave device is addressed via a configured node address assigned by the master during the start-up phase.
- Logical addressing

  The slaves are not addressed individually, but instead a section of the segment-wide 4 GB logical address space is addressed. This section may be used by any number of slaves.

Fieldbus Memory Management Units (FMMUs) handle the local assignment of physical slave memory addresses to logical segment wide addresses. The slave FMMUs are configured by the master. Each FMMU configuration contains a logical start address, a physical memory start address, a bit length and a type that specifies the direction of the mapping (input or output).

The adapter module has two FMMUs. The EtherCAT master can use them for any purpose.

Sync managers

Sync managers control the access to the application memory. Each channel defines a consistent area of the application memory. The adapter module has four sync manager channels. Their functions are described below.

Sync manager channel 0

Sync manager 0 is used for mailbox write transfers (mailbox from master to slave).

Sync manager channel 1

Sync manager 1 is used for mailbox read transfers (mailbox from slave to master).

Sync manager channel 2

Sync manager 2 is used for process output data. It contains the Rx PDOs specified by the PDO assignment object 0x1C12.

Sync manager channel 3

Sync manager 3 is used for process input data. It contains the Tx PDOs specified by the PDO assignment object 0x1C13.

Sync manager watchdog

The sync manager watchdog (process data watchdog) monitors the output sync managers. If the output I/O data is not updated by the master within the configured time, the watchdog will activate time-out and reduce the state of the adapter module from Operational to Safe-operational. The action in this case is specified by object 0x6007 Abort connection option code. The resolution of this watchdog is 1 ms.

Note: EtherCAT has been designed so that it provides no way for a slave to monitor the connection to the master if the slave has no output data.

Note: The drive reaction to a communication fault must be configured separately. See the drive manual for more information.

EtherCAT state machine

The adapter module includes the EtherCAT state machine mandatory for all EtherCAT devices. The state machine is defined in the following figure. The bootstrap state is not supported.

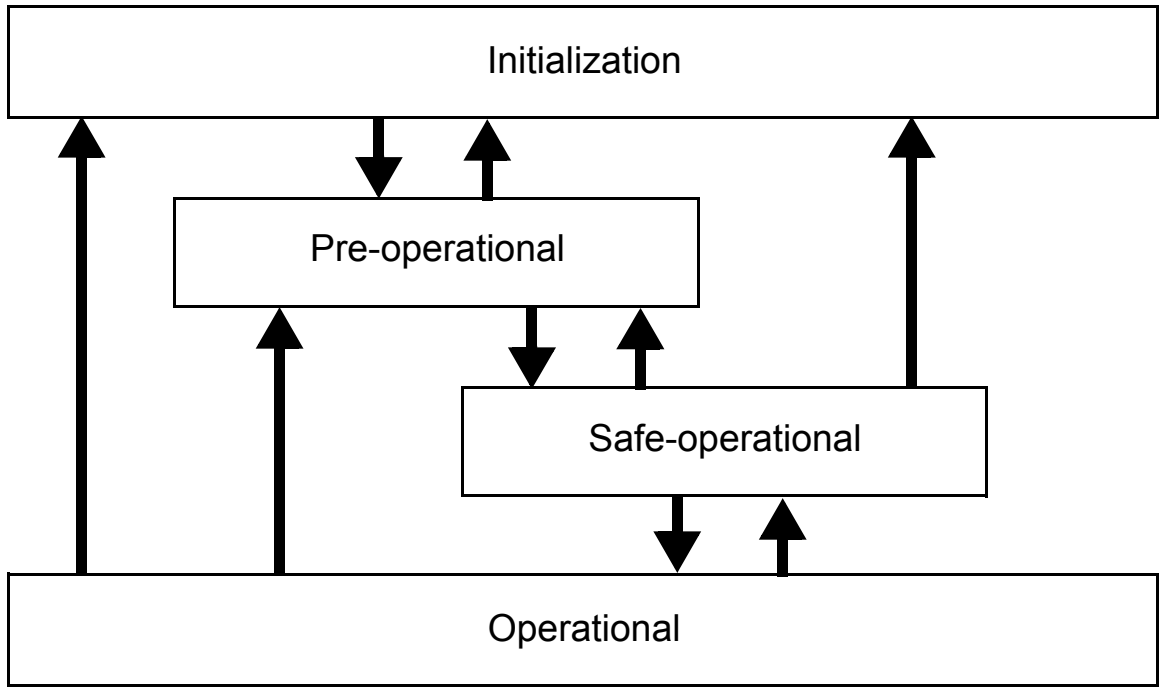

The adapter module enters the Initialization (INIT) state directly after start-up. After this, the adapter module can be switched to the Pre-operational (PREOP) state. In the PREOP state the EtherCAT mailbox communication is allowed and CoE objects can be accessed by SDOs.

After the master has configured the slave, it can switch the adapter module to the Safe-operational (SAFEOP) state. In this state input I/O data (PDOs) is sent from the adapter module to the EtherCAT master, but there is no output I/O data from the master to the adapter module.

To communicate output I/O data the master must switch the adapter module to the Operational state.

Drive synchronization

The following synchronization types are supported:

- Free run = no synchronization
- DC sync = synchronization to a DC Sync0 event.

Only ACSM1 drives support drive synchronization. To synchronize the drive, set the ACSM1 parameter 57.09 KERNEL SYNC MODE to FBSync.

With the DC sync, the minimum cycle time is 500 microseconds and the cycle time must be an integral multiple of 500 microseconds. In other words, the allowed cycle time values are 0.5 ms, 1 ms, 1.5 ms etc.

The synchronization type is set by objects 0x1C32 Output sync manager parameter and 0x1C33 Input sync manager parameter. The settings for the different synchronization types are listed below. These settings should be made in the PREOP state.

Free run

Index/Sub-index	Value
0x1C32:01	0
0x1C33:01	0

DC sync – Synchronous with a DC Sync0 event

Index/Sub-index	Value
0x1C32:01	2
0x1C33:01	2

When the DC sync is used, the Distributed Clocks must also be configured to enable DC and SYNC 0. The default configuration is one Sync0 pulse per bus cycle. This configuration is automatically set by selecting the DC for synchronization option in the DC settings at the master (eg, TwinCAT). Since it is the ESI xml file that provides you with the settings, make sure the correct xml file is available for the master.

CANopen over EtherCAT

The application layer communication protocol in EtherCAT is based on the CiA 301 communication profile and is called CANopen over EtherCAT, or CoE. The protocol specifies the Object Dictionary in the adapter module, as well as communication objects for exchanging process data and acyclic messages.

The adapter module uses the following message types:

- Process Data Object (PDO)

  The PDO is used for cyclic I/O communication, in other words, process data.
- Service Data Object (SDO)

  The SDO is used for acyclic data transmission.
- Emergency Object (EMCY)

  The EMCY is used for error reporting when a fault has occurred in the drive or adapter module.

The Object Dictionary is described in *Appendix A – CoE Object Dictionary*.

Process Data Objects

Process Data Objects (PDOs) are used for exchanging time-critical process data between the master and the slave. Tx PDOs are used to transfer data from the slave to the master and Rx PDOs to transfer data from the master to the slave.

The PDO mapping defines which application objects are transmitted inside a PDO. These typically include the control and status words, references and actual values.

The adapter module has six Rx PDOs and six Tx PDOs. Each PDO can have up to 8 application objects mapped as its contents, except Rx/Tx PDO 21 which can have up to 15 objects mapped. The mapping of the PDOs can be changed only in the PREOP state.

The PDO maps have been pre-defined with the following objects as default. All PDOs can be reconfigured by the user and also saved to the adapter module.

The following table shows the default Rx PDO mapping:

Rx PDO	Mapping object	Object index	Object name
1	1600	6040 -	Controlword
2	1601	6040 607A	Controlword Target position
3	1602	6040 60FF	Controlword Target velocity
4	1603	6040 6071	Controlword Target torque
6	1605	6040 6042	Controlword vl target velocity
21[1)]	1614	2001 2002 2003	Transparent CW Transparent REF1 Transparent REF2

[1)] Default mapping with ACS880:
2101 ABB Drives control word
2102 ABB Drives REF1
2103 ABB Drives REF2

The following table shows the default Tx PDO mapping:

Tx PDO	Mapping object	Object index	Object name
1	1A00	6041 -	Statusword
2	1A01	6041 6064	Statusword Position actual value
3	1A02	6041 6064	Statusword Position actual value
4	1A03	6041 6064 6077	Statusword Position actual value Torque actual value
6	1A05	6041 6044	Statusword vl velocity actual value

Tx PDO	Mapping object	Object index	Object name
21[1)]	1A14	2004 2005 2006	Transparent SW Transparent ACT1 Transparent ACT2

[1)] Default mapping with ACS880:
2104 ABB Drives status word
2105 ABB Drives ACT1
2106 ABB Drives ACT2

The adapter module has two Sync Manager Channels for process data: SM 2 for output data (Rx data) and SM 3 for input data (Tx data). The Sync Manager PDO assignments can be changed only in the PREOP state.

The Rx PDO mappings are configured with CoE objects 0x1600…0x1605 and 0x1614. The Tx PDO mappings are configured with objects 0x1A00…0x1A05 and 0x1A14. Rx and Tx Sync Manager PDO assignments are configured with CoE objects 0x1C12 and 0x1C13, respectively. By default, Rx and TxPDO 6 are enabled and assigned to the Sync Managers.

Note: Subindex 0 contains the number of valid entries within the mapping record. This number is also the number of the objects which shall be transmitted/received with the corresponding PDO. The subindexes from 1h to the number of objects contain information about the mapped application variables.

The mapping values in the CANopen object are hexadecimal-coded. The following table presents an example of the PDO mapping entry structure. The values in the object are hexadecimal:

Type	MSB		LSB
UINT 32	31 16	15 8	7 0
Description	Index eg, 0x6040h 16 bits)	Subindex eg, 0 (8 bits)	Object length in bits eg, 0x10 =16 bits (8 bits)

Emergency Objects

Emergency Objects (EMCYs) are used for sending fault information from the communication module and the drive to the EtherCAT network. They are transmitted whenever a fault occurs in the drive or the adapter module. Only one Emergency Object is transmitted per fault. EMCYs are transmitted via the Mailbox interface.

There are a number of error codes specified for different events. The error codes are listed in *Appendix B – CoE error codes*.

Communication between adapter module and drive

There are two mechanisms of cyclic process data transmission between the drive and the adapter module:

- faster, cyclic high priority communication service suitable for control
- slower, cyclic low priority communication service suitable mainly for secondary purposes, for example monitoring.

Cyclic high priority communication

With ACSM1, ACS850 and ACS880 drives the minimum update cycle time is 500 us (2000 Hz). With ACS355 drives the minimum update cycle time is approximately 4 ms (250 Hz).

Use the high priority service for axis commands and feedback data, ie, torque, velocity and position commands and feedback values. There is room for the drive control word and reference values (command values) and the drive status word and two actual values (feedback values).

The values of the following objects are transferred – or the data where the values of the following objects are derived is transferred – between the drive and the adapter module via the cyclic high priority service.

Note: Since there is room only for two feedback values, the CiA 402 feedback data objects will not be operational unless the corresponding feedback data has been selected to be transmitted from the drive. See sections *Parameter settings – ACSM1* and *Parameter settings – ACS850* on how to select source data for feedback values on the ACSM1 and ACS850 drives.

2001 Transparent CW	2004 Transparent SW
2002 Transparent REF1	2005 Transparent ACT1
2003 Transparent REF2	2006 Transparent ACT2
2101 ABB Drives control word	2104 ABB Drives status word
2102 ABB Drives REF1	2105 ABB Drives ACT1
2103 ABB Drives REF2	2106 ABB Drives ACT2
6040 Controlword	6041 Statusword
6042 vl target velocity	6044 vl velocity actual value
6071 Target torque	6064 Position actual value
607A Target position	606C Velocity actual value
60FF Target velocity	6077 Torque actual value
	60F4 Following error actual value

Cyclic low priority communication

With ACSM1 and ACS850 drives, the update cycle time is 50 ms (20 Hz). With ACS355 drives the update cycle time is approximately 20 ms (50 Hz).

The below-mentioned objects mapped into a PDO are transferred between the drive and the adapter module via the cyclic low priority communication service.

- 4001…4063 Drive parameters
- 6043 vl velocity demand
- 606B Velocity demand value
- 6081 Profile velocity

The cyclic low priority communication service allows transmission of up to 12 x 16-bit words with ACSM1 and ACS850 drives, and 10 x 16-bit words with ACS355 drives, in each direction. If a 32-bit drive parameter is mapped to a PDO, it reserves two word spaces in the cyclic low priority exchange. In ACS355 drives all parameters are 16 bits long.

Example: With an ACSM1 or ACS850 drive, it is possible to map four 16-bit drive parameters and four 32-bit drive parameters in Rx/Tx PDOs.

9

Diagnostics

What this chapter contains

This chapter explains how to trace faults with the status LEDs on the adapter module.

LED indications

The adapter module is equipped with two green LEDs and one bicolor diagnostic LED. The LEDs are described below.

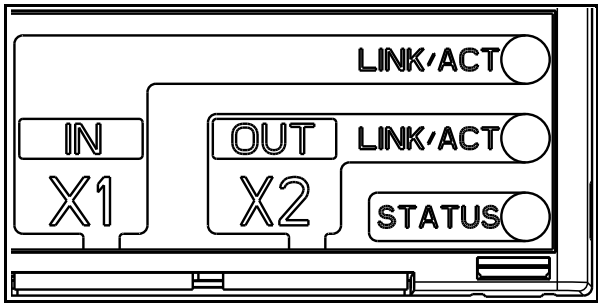

Name	Color	Function
LINK/ACT (IN/X1)	Off	No link on port 0
	Green	Link OK on port 0, no activity
	Green flickering	Activity on port 0
LINK/ACT (OUT/X2)	Off	No link on port 1
	Green	Link OK on port 1, no activity
	Green flickering	Activity on port 1
STATUS	Off	INIT state
	Green blinking	PREOP state
	Green single flash	SAFEOP state
	Green	OP state
	Red blinking	State change requested by the master is impossible because of a local error
	Red single flash	State changed autonomously by a slave because of a local error
	Red double flash	Process data watchdog time-out

10

Technical data

What this chapter contains

This chapter contains the technical data of the adapter module and the EtherCAT link.

FECA-01

The following figure describes the enclosure of the adapter module from the front and side.

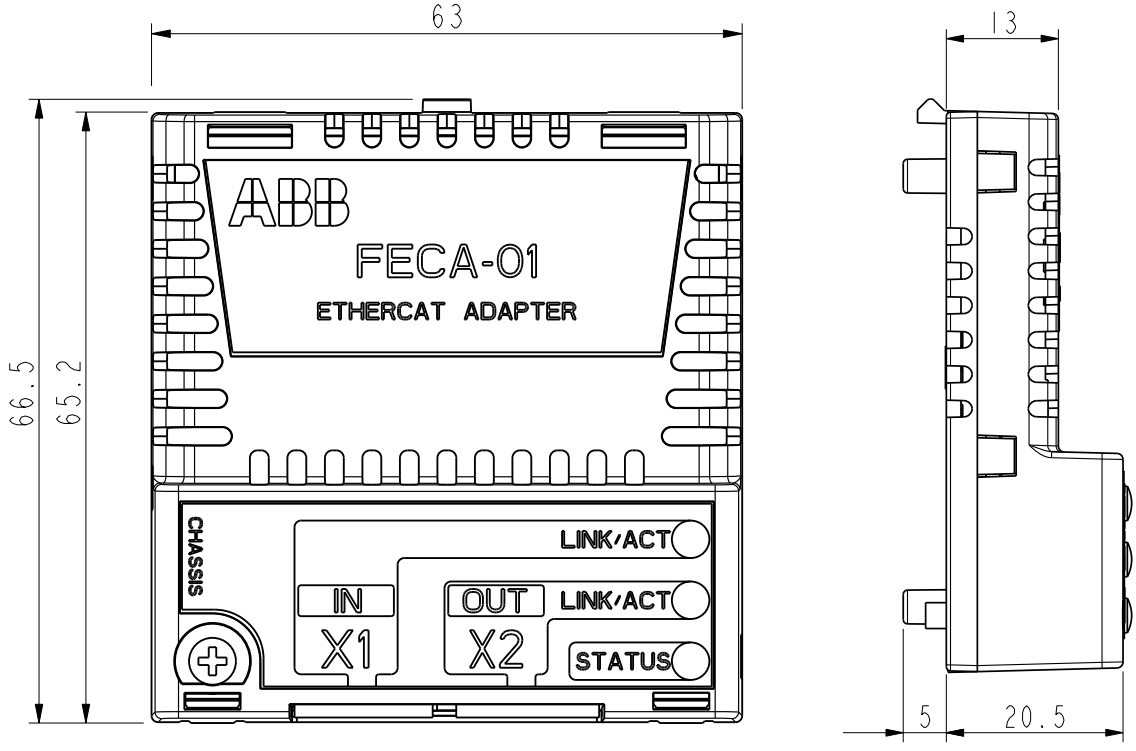

Mounting	Into the option slot on the drive
Degree of protection	IP20
Ambient conditions	The applicable ambient conditions specified for the drive in its manuals are in effect.
Indicators	Two green LEDs and one bicolor LED: LINK/ACT, LINK/ACT and STATUS
Connectors	20-pin connector to the drive (X3) Two 8P8C modular jacks (X1 and X2)
Power supply	+3.3 V ±5% max. 450 mA (supplied by the drive)
General	Estimated min. lifetime 100 000 h All materials UL/CSA-approved Complies with EMC standard EN 61800-3:2004 Printed circuit board conformal coated

EtherCAT link

Compatible devices	All EtherCAT-compliant devices
Medium	100BASE-TX • Termination: Internal • Wiring: Cat 5e FTP[1)] or STP[1)] (UTP) • Connector: 8P8C modular jack (RJ-45) • Maximum segment length: 100 m
Topology	Daisy chain
Transfer rate	100 Mbit/s
Serial communication type	Full duplex
Protocol	EtherCAT

[1)] Shielded cable strongly recommended

11

Appendix A – CoE Object Dictionary

What this chapter contains

This chapter describes the CANopen over EtherCAT (CoE) Object Dictionary.

Object Dictionary structure

The objects in the CoE Object Dictionary can be accessed with SDO services, and many of the dictionary objects can be mapped for cyclic communication in PDOs. Each object is addressed using a 16-bit index and a 8-bit subindex.

The following table presents the overall layout of the standard Object Dictionary.

Index (hex)	Object Dictionary area
0000 - 0FFF	Data type area
1000 - 1FFF	Communication profile area
2000 - 5FFF	Manufacturer-specific profile area
6000 - 9FFF	Device profile area
A000 - FFFF	Reserved area

Explanations for the abbreviations in the columns of the tables are given below:

Index	Object index (hex)
SI	Subindex (hex)
Type	Data type • U32 = 32-bit unsigned integer (0 … 2^{32} - 1) • I32 = 32-bit signed integer (-2^{31} … 2^{31} - 1) • U16 = 16-bit unsigned integer (0…65535) • I16 = 16-bit signed integer (-32768…32767) • U8 = 8-bit unsigned integer (0…255) • I8 = 8-bit signed integer (-128…127) • Str = string
Access	SDO read/write access • R = object can only be read by the SDO service • RW = object can be both read and written by the SDO service
PM	PDO mapping • Rx = object can be mapped into an Rx PDO • Tx = object can be mapped into a Tx PDO
NVS	Possibility of non-volatile storage • FBA = object value is saved to the adapter module • Drv = object value is saved to drive parameters

Communication profile objects (0x1000...0x1FFF)

The objects of the communication profile describe the basic EtherCAT properties of the adapter module and are common to all EtherCAT slaves using the CoE communication protocol. The objects are described in following table:

Index	SI	Name	Type	Access	Information	NVS
1000		Device type	U32	R	Value 0x00020192 = servo drive, generic PDO mapping, profile 402	
1001		Error register **Note:** Can be mapped into a Tx PDO.	U8	R	CiA 301 Error register object. When a bit is set, the error is active. Bits: • 7: Manufacturer-specific (see object 2202) • 4: Communication • 3: Temperature • 2: Voltage • 1: Current • 0: Generic error (any drive fault).	
1008		Device name	Str	R	Constant string is FECA-01 and <drive type>.	
1009		Hardware version	Str	R	Board revision, eg, A	
100A		Software version	Str	R	Firmware name and version	

Index	SI	Name	Type	Access	Information	NVS
1010	0	Store parameters	U8	R	Write value 0x65766173 into a relevant subindex to save NVS object values.	
	1	Save all parameters	U32	RW	Save the communication and device profile areas.	
	2	Save comm parameters	U32	RW	Save objects 1000…1FFF (communication profile area).	
	3	Save appl parameters	U32	RW	Save objects 6000…9FFF (std. device profile area).	
1011	0	Restore default parameters	U8	R	Write value 0x64616F6C into a relevant subindex to restore the default values to NVS objects.	
	1	Restore all defaults	U32	RW	Restore the default values to the communication and device profile areas.	
	2	Restore comm defaults	U32	RW	Restore objects 1000…1FFF (communication profile area).	
	3	Restore appl defaults	U32	RW	Restore objects 6000…9FFF (std. device profile area) which are saved to the FBA.	

Index	SI	Name	Type	Access	Information	NVS
1018	0	Identity	U8	R	Number of entries (4)	
	1	Vendor ID	U32	R	Value 0xB7 = ABB Drives	
	2	Product code	U32	R	Product code read from the drive. Eg, value 0x1F7 = ACS355, 0x20A = ACSM1 speed, 0x20B = ACSM1 motion, 0x21C = ACS850, 0x259 = ACS880.	
	3	Revision	U32	R	FBA firmware version number (hex), eg, value 0x112 = FFECS112	
	4	Serial number	U32	R	Serial number of the adapter module	
1600	0	RxPDO 1 map	U8	RW	Number of mapped objects (0…8). Write access in the PREOP state only.	FBA
	1	-	U32	RW	Rx PDO mapping entry 1. Value 0x60400010 = object 6040 Controlword, length 16 bits.	FBA
	…	…	U32	RW	Value 0 = none	FBA
	8	-	U32	RW	Rx PDO 1mapping entry 8. Value 0 = none	FBA

Index	SI	Name	Type	Access	Information	NVS
1601	0	RxPDO 2 map	U8	RW	Number of mapped objects (0...8). Write access in the PREOP state only.	FBA
	1	-	U32	RW	Rx PDO 2 mapping entry 1. Value 0x60400010 = object 6040 Controlword, length 16 bits.	FBA
	2	-	U32	RW	Rx PDO 2 mapping entry 2. Value 0x607A0020 = object 607A Target position, length 32 bits.	FBA
	…	…	U32	RW	Value 0 = none	FBA
	8	-	U32	RW	Rx PDO 2 mapping entry 8. Value 0 = none.	FBA
1602	0	RxPDO 3 map	U8	RW	Number of mapped objects (0...8). Write access in the PREOP state only.	FBA
	1	-	U32	RW	Rx PDO 3 mapping entry 1. Value 0x60400010 = object 6040 Controlword, length 16 bits.	FBA
	2	-	U32	RW	Rx PDO 3 mapping entry 2. Value 0x60FF0020 = object 60FF Target velocity, length 32 bits.	FBA
	…	…	U32	RW	Value 0 = none	FBA
	8	-	U32	RW	Rx PDO 3 mapping entry 8. Value 0 = none.	FBA

Index	SI	Name	Type	Access	Information	NVS
1603	0	RxPDO 4 map	U8	RW	Number of mapped objects (0...8). Write access in the PREOP state only.	FBA
	1	-	U32	RW	Rx PDO 4 mapping entry 1. Value 0x60400010 = object 6040 Controlword, length 16 bits.	FBA
	2	-	U32	RW	Rx PDO 4 mapping entry 2. Value 0x60710010 = object 6071 Target torque, length 16 bits.	FBA
	…	…	U32	RW	Value 0 = none	FBA
	8	-	U32	RW	Rx PDO 4 mapping entry 8. Value 0 = none.	FBA
1605	0	RxPDO6 map	U8	RW	Number of mapped objects (0...8). Write access in the PREOP state only.	FBA
	1	-	U32	RW	Rx PDO 6 mapping entry 1. Value 0x60400010 = object 6040 Controlword, length 16 bits.	FBA
	2	-	U32	RW	Rx PDO 6 mapping entry 2. Value 0x60420010 = object 6042 vl target velocity, length 16 bits.	FBA
	…	…	U32	RW	Value 0 = none	FBA
	8	-	U32	RW	Rx PDO 6 mapping entry 8. Value 0 = none.	FBA

Index	SI	Name	Type	Access	Information	NVS
1614	0	RxPDO 21 map	U8	RW	Number of mapped objects (0...15). Write access in the PREOP state only.	FBA
	1	-	U32	RW	Rx PDO 21 mapping entry 1. Value 0x20010020 = object 2001 Transparent CW, length 32 bits. ACS880: Value 0x21010010 = object 2101 ABB Drives cw, length 16 bits	FBA
	2	-	U32	RW	Rx PDO 21 mapping entry 2. Value 0x20020020 = object 2002 Transparent REF1, length 32 bits. ACS880: Value 0x21020010 = object 2102 ABB Drives REF1, length 16 bits	FBA
	3	-	U32	RW	Rx PDO 21 mapping entry 3. Value 0x20020020 = object 2003 Transparent REF2, length 32 bits. ACS880: Value 0x21030010 = object 2103 ABB Drives REF2, length 16 bits	FBA
	…	…	U32	RW	Value 0 = none	FBA
	F	-	U32	RW	Rx PDO 21 mapping entry 15. Value 0 = none.	FBA

Index	SI	Name	Type	Access	Information	NVS
1A00	0	TxPDO 1 map	U8	RW	Number of mapped objects (0...8). Write access in the PREOP state only.	FBA
	1	-	U32	RW	Tx PDO mapping entry 1. Value 0x60410010 = object 6041 Status word, length 16 bits	FBA
	…	…	U32	RW	Value 0 = none	FBA
	8	-	U32	RW	Tx PDO mapping entry 8. Value 0 = none.	FBA
1A01	0	TxPDO 2 map	U8	RW	Number of mapped objects (0…8). Write access in the PREOP state only.	FBA
	1	-	U32	RW	Tx PDO 2 mapping entry 1. Value 0x60410010 = object 6041 Status-word, length 16 bits	FBA
	2	-	U32	RW	Tx PDO 2 mapping entry 2. Value 0x60640020 = object 6064 Position actual value, length 32 bits	FBA
	…	…	U32	RW	Value 0 = none	FBA
	8	-	U32	RW	Tx PDO 2 mapping entry 8. Value 0 = none.	FBA

Index	SI	Name	Type	Access	Information	NVS
1A02	0	TxPDO 3 map	U8	RW	Number of mapped objects (0…8). Write access in the PREOP state only.	FBA
	1	-	U32	RW	Tx PDO 3 mapping entry 1. Value 0x60410010 = object 6041 Statusword, length 16 bits	FBA
	2	-	U32	RW	Tx PDO 3 mapping entry 2. Value 0x60640020 = object 6064 Position actual value, length 32 bits	FBA
	…	…	U32	RW	Value 0 = none	FBA
	8	-	U32	RW	Tx PDO 3 mapping entry 8. Value 0 = none.	FBA

Index	SI	Name	Type	Access	Information	NVS
1A03	0	TxPDO 4 map	U8	RW	Number of mapped objects (0…8). Write access in the PREOP state only.	FBA
	1	-	U32	RW	Tx PDO 4 mapping entry 1. Value 0x60410010 = object 6041 Statusword, length 16 bits	FBA
	2	-	U32	RW	Tx PDO 4 mapping entry 2. Value 0x60640020 = object 6064 Position actual value, length 32 bits	FBA
	3	-	U32	RW	Tx PDO 4 mapping entry 3. Value 0x60770010 = object 6077 Torque actual value, length 16 bits	FBA
	…	…	U32	RW	Value 0 = none	FBA
	8	-	U32	RW	Tx PDO 4 mapping entry 8. Value 0 = none	FBA

Index	SI	Name	Type	Access	Information	NVS
1A05	0	TxPDO 6 map	U8	RW	Number of mapped objects (0…8). Write access in the PREOP state only.	FBA
	1	-	U32	RW	Tx PDO 6 mapping entry 1. Value 0x60410010 = object 6041 Statusword, length 16 bits.	FBA
	2	-	U32	RW	Tx PDO 6 mapping entry 2. Value 0x60440010 = object 6044 vl velocity actual value, length 16 bits.	FBA
	…	…	U32	RW	Value 0 = none	FBA
	8	-	U32	RW	Tx PDO 6 mapping entry 8. Value 0 = none	FBA

Index	SI	Name	Type	Access	Information	NVS
1A14	0	TxPDO 21 map	U8	RW	Number of mapped objects (0...15). Write access in the PREOP state only.	FBA
	1	-	U32	RW	TxPDO 21 mapping entry 1. Value 0x20040020 = object 2004 Transparent SW, length 32 bits. ACS880: Value 0x21040010 = object 2104 ABB Drives sw, length 16 bits	FBA
	2	-	U32	RW	TxPDO 21 mapping entry 2. Value 0x20050020 = object 2005 Transparent ACT1, length 32 bits. ACS880: Value 0x21050010 = object 2105 ABB Drives ACT1, length 16 bits	FBA
	3	-	U32	RW	TxPDO 21 mapping entry 3. Value 0x20060020 = object 2006 Transparent ACT2, length 32 bits. ACS880: Value 0x21060010 = object 2106 ABB Drives ACT2, length 16 bits	FBA
	…	…	U32	RW	Value 0 = none	FBA
	F	-	U32	RW	TxPDO 21 mapping entry 15. Value 0 = none.	FBA

Index	SI	Name	Type	Access	Information	NVS
1C00	0	Sync manager communication type	U8	R	SM0…SM3 communication types. Number of entries (4).	
	1	-	U8	R	Value 1 = mailbox receive (output)	
	2	-	U8	R	Value 2 = mailbox send (input)	
	3	-	U8	R	Value 3 = process data output	
	4	-	U8	R	Value 4 = process data input	
1C12	0	Sync manager 2 (Rx) PDO assign	U8	RW	Number of assigned PDOs (0…6). Write access in the PREOP state only.	FBA
	1		U16	RW	Sync manager 2 PDO assignment 1. Eg, value 0x1605 = Rx PDO 6	FBA
	2		U16	RW	Sync manager 2 PDO assignment 2. Eg, value 0 = none.	FBA
	3		U16	RW	Sync manager 2 PDO assignment 3	FBA
	4		U16	RW	Sync manager 2 PDO assignment 4	FBA
	5		U16	RW	Sync manager 2 PDO assignment 5	FBA
	6		U16	RW	Sync manager 2 PDO assignment 6	FBA

Index	SI	Name	Type	Access	Information	NVS
1C13	0	Sync manager 3 (Tx) PDO assign	U8	RW	Number of assigned PDOs (0…6). Write access in the PREOP state only.	FBA
	1		U16	RW	Sync manager 3 PDO assignment 1. Eg, value 0x1A05 = Tx PDO 6.	FBA
	2		U16	RW	Sync manager 3 PDO assignment 2. Eg, value 0 = none.	FBA
	3		U16	RW	Sync manager 3 PDO assignment 3	FBA
	4		U16	RW	Sync manager 3 PDO assignment 4	FBA
	5		U16	RW	Sync manager 3 PDO assignment 5	FBA
	6		U16	RW	Sync manager 3 PDO assignment 6	FBA

Index	SI	Name	Type	Access	Information	NVS
1C32	0	Output sync manager parameter	U8	R	Sync manager 2 synchronization settings	-
	1	Synchronization type	U16	R	0x00 = Free run (default) 0x01 = SM sync, SM2 event 0x02 = DC Sync0	FBA
	4	Synchronization types supported	U16	R	Drive dependent. Bits: • 4…2: 000 = No DC, 001 = DC Sync0 • 1: SM sync supported • 0: Free run supported	
	5	Minimum cycle time	U32	R	Minimum supported cycle time (ns). 500 000.	-
	6	Calc and copy time	U32	R	Minimum required time between SM2 event and DC sync event (ns). 102 000.	-
	9	Delay time	U32	R	Delay between the DC sync event and the time when the data is available in the process (ns). 0	-
	C	Cycle time too small	U16	R	Error counter which is incremented if input process data has not been refreshed before the next SM2 event	-

Index	SI	Name	Type	Access	Information	NVS
1C33	0	Input sync manager parameter	U8	R	Sync manager 3 synchronization settings	-
	1	Synchronization type	U16	RW	0x00 = Free run (default) 0x01 = SM sync, SM3 event 0x22 = SM sync, SM2 event 0x02 = DC Sync0	FBA
	4	Synchronization types supported	U16	R	Drive dependent. Bits: • 4…2: 000 = No DC, 001 = DC Sync0 • 1: SM sync supported • 0: Free run supported	-
	5	Minimum cycle time	U32	R	See subindex 5 of index 1C32. 500 000.	-
	6	Calc and copy time	U32	R	Delay between the time of input process data sampling and the time when the data is available for the master (ns) 88 000.	-
	C	Cycle time too small	U16	R	See subindex C of index 1C32.	-

Manufacturer-specific profile objects (0x2000...0x5FFF)

The manufacturer-specific profile objects contain the ABB Drives profile control and status words, reference value, actual value and diagnostic data. The objects are described in the following table.

Index	SI	Name	Type	Access	PM	Information	NVS
2001		Transparent CW	U32	R	Rx	Raw control word of the drive	
2002		Transparent REF1	U32	R	Rx	Raw reference value 1 of the drive	
2003		Transparent REF2	U32	R	Rx	Raw reference value 2 of the drive	
2004		Transparent SW	U32	R	Tx	Raw status word of the drive	
2005		Transparent ACT1	U32	R	Tx	Raw actual value 1 of the drive	
2006		Transparent ACT2	U32	R	Tx	Raw actual value 2 of the drive	
2101		ABB Drives control word	U16	R	Tx	ABB Drives profile control word	
2102		ABB Drives REF1	I16	R	Tx	ABB Drives profile reference value 1	
2103		ABB Drives REF2	I16	R	Tx	ABB Drives profile reference value 2	
2104		ABB Drives status word	U16	R	Tx	ABB Drives profile status word	
2105		ABB Drives ACT1	I16	R	Tx	ABB Drives profile actual value 1	
2106		ABB Drives ACT2	I16	R	Tx	ABB Drives profile actual value 2	
2200		Diagnostic message	Str	R		Plain text status or error message from the adapter module	

Index	SI	Name	Type	Ac-cess	PM	Information	NVS
2201		Last drive fault code	U16	R	Tx	Last fieldbus fault code read from the drive	

Index	SI	Name	Type	Ac-cess	PM	Information	NVS
2202		Diagnostic number	I16	RW		Status/error code from the adapter module. Indications 1,5,8 are reset by the fault reset mechanism of the currently selected communication profile. All indications are reset by writing the current error number to this object. This does not resolve the cause of the error. Values: • 1 = Default group 51 parameter values written to the drive. (This is normal for the first power-up when the module has been installed into the drive.) • 3 = Cyclic low priority communication failed. • 5 = FBA configuration files corrupted. • 8 = Error in drive parameters or other information received from the drive or acyclic communication failed. • 64 = Cyclic high priority communication failed.	

Index	SI	Name	Type	Ac-cess	PM	Information	NVS
4001	0	Group 1	U8	R		Drive parameter group 1	
	1	Parameter 1.01				Drive parameter 1.01	Drv
	2	Parameter 1.02				Drive parameter 1.02	Drv
	…	…	…	…	…	…	…
…	…	…	…	…	…	…	…
4063		Group 99	U8	R		Drive parameter group 99	
	1	Parameter 99.01				Drive parameter 99.01	Drv
	…	…	…	…	…	…	…

Note: The Transparent and ABB Drives command values cannot be changed with an SDO write service.

Drive parameter access via CoE objects

Drive parameters can be accessed via objects 0x4001…0x4063. The 8 least significant bits of the object index correspond to the drive parameter group and the sub-index is the drive parameter index.

	Index		Subindex
Bit	15…8	7…0	8…0
Value	0x40	Drive par. group (hex)	Drive par. index (hex)

Examples:

- Object 0x400A:02 = drive par. 10.02
- Object 0x4033:0F = drive par. 51.15

Notes:

- Drive parameters are not restored to default values with object 0x1011.
- Drive parameters, when mapped into a PDO, are transmitted via the cyclic low priority communication service.

Standardized device profile area (0x6000…0x9FFF)

Index	SI	Name	Type	Access	PM	Information	NVS
6007		Abort connection option code	I16	RW		Action to take when the slave leaves the OP state. Values: 0 = No action 1 = Fault signal (offline, default) 2 = Disable voltage command 3 = Quick stop command	FBA

Index	SI	Name	Type	Access	PM	Information	NVS
603F		Error code	U16	R	Tx	CiA 402 error code of the last error which occurred in the drive. Values according to IEC 61800-7-201. Manufacturer-specific error codes 0xFF00...0xFFFF: In general, all drive fault codes from 0xFF00 and above pass straight through into this object. Two error codes are generated by the adapter module: • 0xFFE1: Failed to read fault code from the drive. • 0xFFFF: Unhandled drive fault code - corresponding CiA 402 error code does not exist. See object 2201 and the drive manual.	
6040		Controlword	U16	RW	Rx	CiA 402 control word	
6041		Statusword	U16	R	Tx	CiA 402 status word	
6042		vl target velocity	I16	RW	Rx	Effective in the vl operation mode	
6043		vl velocity demand	I16	R	Tx	Operational if the ramp function generator output is available from the drive. Cyclic low priority communication. **Note:** Not available with ACS355.	

Index	SI	Name	Type	Access	PM	Information	NVS
6044	0	vl velocity actual value	I16	R	Tx	Operational when velocity feedback is available from the drive. **Note:** When ACS355 is used in the scalar control mode, this object does not indicate axis velocity, but the output frequency of the drive.	
6046	0	vi velocity min max amount	U8	R		Minimum and maximum velocity absolute value settings for the vl operation mode	
	1	min abs velocity	U32	RW		Velocity absolute value minimum	Drv
	2	max abs velocity	U32	RW		Velocity absolute value maximum	Drv
6048	0	vl velocity acceleration	U8	R		Acceleration ramp settings for the vl operation mode	
	1	Delta speed	U32	RW		Ramp delta speed (vl scaling units). **Note:** Read only in ACS355 and ACS880.	Drv
	2	Delta time	U16	RW		Ramp delta time (s)	Drv
6049	0	vl velocity deceleration	U8	R		Deceleration ramp settings for the vl operation mode	
	1	Delta speed	U32	RW		Ramp delta speed (vl scaling units). **Note:** Read only in ACS355 and ACS880.	Drv
	2	Delta time	U16	RW		Ramp delta time (s)	Drv

Index	SI	Name	Type	Access	PM	Information	NVS
604A	0	vl velocity quick stop	U8	RO		Quick stop ramp settings for the vl operation mode	
	1	Delta speed	U32	RW		Ramp delta speed (vl scaling units). **Note:** Read only in ACS355 and ACS880.	Drv
	2	Delta time	U16	RW		Ramp delta time (s)	Drv
604C	0	vl dimension factor	U8	R		Velocity data scaling factor for the vl operation mode. Basic unit in the vl operation mode is rpm.	
	1	numerator	I32	RW		Default: 1	FBA
	2	denominator	I32	RW		Default: 1	FBA
605B		Shutdown option code	I16	RW		0 = coast stop (default) 1 = ramp stop	FBA
605C		Disable operation option code	I16	RW		0 = coast stop 1 = ramp stop (default)	FBA
605D		Halt option code	I16	RW		vl mode. 1 = force ramp generator input to zero (default) 2…4 = force ramp generator output to zero **Note:** Halt does not cause the drive to stop, merely to run at a zero speed.	FBA

Index	SI	Name	Type	Access	PM	Information	NVS
6060	0	Modes of operation	I8	RW	Rx	CiA 402 operation mode request. 0 = No mode change (default) 1 = Profile position mode (pp) 2 = Velocity mode (vl) 3 = Profile velocity mode (pv) 4 = Profile torque mode (tq) 6 = Homing mode (hm) 8 = Cyclic sync position mode (csp) 9 = Cyclic sync velocity mode (csv) 10 = Cyclic sync torque mode (cst)	FBA
6061		Modes of operation display	I8	R	Tx	Current operation mode	
6064		Position actual value	I32	RO	Tx	Operational when position feedback is available from the drive	
6065		Following error window	U32	RW		Maximum allowed position error for the status word following an error bit. Default: 0xFFFFFFFF (= disabled)	FBA

Index	SI	Name	Type	Ac-cess	PM	Information	NVS
6066		Following error time out	U16	RW		Time-out (ms) after which the status word following an error bit is asserted when the following error window is exceeded. Default: 0 (= immediate)	FBA
606B		Velocity demand value	I32	R	Tx	Operational if the ramp function generator output is available from the drive. Cyclic low priority communication. **Note:** Not available with ACS355.	
606C		Velocity actual value	I32	R	Tx	Operational when velocity feedback is available from the drive	
6071		Target torque	I16	RW	Rx	Effective in the cst, tq operation modes	
6077		Torque actual value	I16	R	Tx	Operational when torque feedback is available from the drive	
607A		Target position	I32	RW	Rx	Effective in the csp, pp operation modes	

Index	SI	Name	Type	Access	PM	Information	NVS
607B	0	Position range limit	U8	R		Modulo values for the position command value. When the limits are exceeded, the command value wraps around to the other end of the range. Modulo calculation is disabled when both limit values are zeros.	
	1	Min position range limit	I32	RW		Minimum input position data value. Default: 0	FBA
	2	Max position range limit	I32	RW		Maximum input position data value. Default: 0	FBA
607C		Home offset	I32	RW		Offset from zero point to home position. Default: 0. **Note**: New values are activated in homing mode only.	FBA
607D	0	Software position limit	U8	R		Saturation limit values for the position command value	
	1	Min position limit	I32	RW		Default: -2^{31}	FBA
	2	Max position limit	I32	RW		Default: $2^{31} - 1$	FBA
6081		Profile velocity	U32	RW		Velocity normally attained at the end of the acceleration ramp during a profiled move. Cyclic low priority communication.	Drv

Index	SI	Name	Type	Access	PM	Information	NVS
6083		Profile acceleration	U32	RW		Acceleration during a profiled move. Unit: position increments / s^2.	Drv
6084		Profile deceleration	U32	RW		Deceleration during a profiled move. Unit: position increments / s^2.	Drv
6085		Quick stop deceleration	U32	RW		Deceleration used to stop the motor when a quick stop command is given. Unit: position increments / s^2.	Drv
6087		Torque slope	U32	RW		Effective in the tq operation mode. Unit: 0.1% / s. Default value: 1000.	FBA
608F	0	Position encoder resolution	U8	R		Position scale definition. Position increments per a specified number of axis revolutions.	
	1	Increments	U32	RW		Default: 65536	FBA
	2	Revolutions	U32	RW		Default: 1	FBA
6093	0	Position factor	U8	R		Position data scaling factor	
	1	Numerator	U32	RW		Default: 1	FBA
	2	Divisor	U32	RW		Default: 1	FBA

Index	SI	Name	Type	Access	PM	Information	NVS
6094	0	Velocity encoder factor	U8	R		Velocity data scaling factor. Basic velocity unit is: position increments / s.	
	1	Numerator	U32	RW		Default: 1	FBA
	2	Divisor	U32	RW		Default: 1	FBA
		Homing method	I8	RW		See the ACSM1 firmware manual for a description of the homing methods. 0 = No method 1…35 = CiA 402 method 1…35	Drv
6099	0	Homing speeds	U8			Speeds during the homing procedure	
	1	Speed during search for switch	U32			ACSM1 homing speed 1	Drv
		Speed during search for zero	U32			ACSM1 homing speed 2	Drv
60F4		Following error actual value	I32	R	Tx	Position error. Operational when position feedback is available from the drive.	
60FF		Target velocity	I32	RW	Rx	Effective in the csv, pv operation modes	

Index	SI	Name	Type	Access	PM	Information	NVS
6502	0	Supported drive modes	U32	R		Drive dependent. Bits: • 9: cst • 8: csv • 7: csp • 6 • 5: hm • 4 • 3: tq • 2: pv • 1: vl • 0: pp	
6504	0	Drive manufacturer	Srt	R		ABB Drives	
6505	0	http drive catalog address	Str	R		www.abb.com	

CoE objects affecting drive parameters

The CoE objects which directly affect drive parameters, and vice versa, are listed in the tables below (excluding the drive parameter objects 0x4001...0x4063).

Note: Some objects affect the same drive parameter as another object, in other words, when one object is written it may cause the value of another object to change.

CoE objects affecting ACSM1 parameters

Index	SI	Name	ACSM1 parameter
6046		vl velocity min max amount	-
	1	min abs velocity	24.12 SPEED REFMIN ABS
	2	max abs velocity	20.01 MAXIMUM SPEED 20.02 MINIMUM SPEED
6048		vl velocity acceleration	-
	1	Delta speed	25.02 SPEED SCALING
	2	Delta time	25.03 ACC TIME
6049		vl velocity deceleration	-
	1	Delta speed	25.02 SPEED SCALING
	2	Delta time	25.04 DEC TIME
604A		vl velocity quick stop	-
	1	Delta speed	25.02 SPEED SCALING
	2	Delta time	25.11 EM STOP TIME
6081		Profile velocity	65.05 POS SPEED 1
6083		Profile acceleration	65.06 PROF ACC 1
6084		Profile deceleration	65.07 PROF DEC 1
6085		Quick stop decelera-tion	25.02 SPEED SCALING (read-only) 25.11 EM STOP TIME
6098		Homing method	62.01 HOMING METHOD
6099	1	Speed during search for switch	62.07 HOMING SPEEDREF 1
	2	Speed during search for zero	62.08 HOMING SPEEDREF 2

CoE objects affecting ACS850 parameters

Index	SI	Name	ACS850 parameter
6046		vl velocity min max amount	-
	1	min abs velocity	21.09 SpeedRef min abs
	2	max abs velocity	20.01 Maximum speed 20.02 Minimum speed
6048		vl velocity acceleration	-
	1	Delta speed	19.01 Speed scaling
	2	Delta time	22.02 Acc time1
6049		vl velocity deceleration	-
	1	Delta speed	19.01 Speed scaling
	2	Delta time	22.03 Dec time1
604A		vl velocity quick stop	-
	1	Delta speed	19.01 Speed scaling
	2	Delta time	22.12 Em stop time
6085		Quick stop deceleration	19.01 Speed scaling (read-only) 22.12 Em stop time

CoE objects affecting ACS355 parameters

Index	SI	Name	ACS355 parameter
6046		vl velocity min max amount	-
	1	min abs velocity	2001 MINIMUM SPEED
	2	max abs velocity	2002 MAXIMUM SPEED
6048		vl velocity acceleration	-
	1	Delta speed	2002 MAXIMUM SPEED (read-only)
	2	Delta time	2202 ACCELER TIME 1
6049		vl velocity deceleration	-
	1	Delta speed	2002 MAXIMUM SPEED (read only)
	2	Delta time	2203 DECELER TIME 1
604A		vl velocity quick stop	-
	1	Delta speed	2002 MAXIMUM SPEED (read only)
	2	Delta time	2208 EMERG DEC TIME
6085		Quick stop decelera-tion	2002 MAXIMUM SPEED (read only) 2208 EMERG DEC TIME

CoE objects affecting ACS880 parameters

Index	SI	Name	ACS880 parameter
6046		vl velocity min max amount	-
	1	min abs velocity	30.11 Minimum speed
	2	max abs velocity	30.12 Maximum speed
6048		vl velocity acceleration	-
	1	Delta speed	46.01 Speed scaling (read-only)
	2	Delta time	23.12 Acceleration time 1
6049		vl velocity deceleration	-
	1	Delta speed	46.01 Speed scaling (read-only)
	2	Delta time	23.13 Deceleration time 1
604A		vl velocity quick stop	-
	1	Delta speed	46.01 Speed scaling (read-only)
	2	Delta time	23.23 Emergency stop time
6085		Quick stop deceleration	46.01 Speed scaling (read-only) 23.23 Emergency stop time

Vendor-specific AL Status codes

The vendor-specific AL Status code is the following:

0x8001 Cyclic low priority mapping failed

12

Appendix B – CoE error codes

What this chapter contains

This chapter contains a list of the CANopen over EtherCAT error codes.

Error codes

Error codes can be read from object 0x603F Error code. The CoE error codes are described in the following table. Error codes between xx80…xxFF (hex) and FF00…FFFF (hex) are manufacturer-specific. Descriptions for these error codes can be found in the appropriate drive firmware manual and/or the drive fault code parameter. Furthermore, the following two error codes are generated by the adapter module:

- 0xFFE1: Failed to read the fault code from the drive.
- 0xFFFF: Unhandled drive fault code (corresponding CiA 402 error code does not exist. See object 0x2201 for the original drive fault code and consult the drive manual).

Error code (hex)	Meaning
0000	Error reset or no error
1000	Generic error
2000	Current
2100	Current on the device input side

Error code (hex)	Meaning
2110	Short circuit / ground leakage
2120	Ground leakage
2121	Ground leakage phase L1
2122	Ground leakage phase L2
2123	Ground leakage phase L3
2130	Short circuit
2131	Short circuit phases L1-L2
2132	Short circuit phases L2-L3
2133	Short circuit phases L3-L1
2200	Internal current
2211	Internal current no. 1
2212	Internal current no. 2
2213	Overcurrent in the ramp function
2214	Overcurrent in the sequence
2220	Continuous overcurrent
2221	Continuous overcurrent no. 1
2222	Continuous overcurrent no. 2
2230	Short circuit / ground leakage
2240	Ground leakage
2250	Short circuit
2300	Current on the device output side
2310	Continuous overcurrent
2311	Continuous overcurrent no. 1
2312	Continuous overcurrent no. 2
2320	Short circuit / ground leakage
2330	Ground leakage
2331	Ground leakage phase U
2332	Ground leakage phase V
2333	Ground leakage phase W

Error code (hex)	Meaning
2340	Short circuit
2341	Short circuit phases U-V
2342	Short circuit phases V-W
2343	Short circuit phases W-U
3000	Voltage
3100	Mains voltage
3110	Mains overvoltage
3111	Mains overvoltage phase L1
3112	Mains overvoltage phase L2
3113	Mains overvoltage phase L3
3120	Mains undervoltage
3121	Mains undervoltage phase L1
3122	Mains undervoltage phase L2
3123	Mains undervoltage phase L3
3130	Phase failure
3131	Phase failure L1
3132	Phase failure L2
3133	Phase failure L2
3134	Phase sequence
3140	Mains frequency
3141	Mains frequency too great
3142	Mains frequency too small
3200	DC link voltage
3210	DL link overvoltage
3211	Overvoltage no. 1
3212	Overvoltage no. 2
3220	DL link undervoltage
3221	Undervoltage no. 1
3222	Undervoltage no. 2

Error code (hex)	Meaning
3230	Load error
3300	Output voltage
3310	Output overvoltage
3311	Output overvoltage phase U
3312	Output overvoltage phase V
3313	Output overvoltage phase W
3320	Armature circuit
3321	Armature circuit interrupted
3330	Field circuit
3331	Field circuit interrupted
4000	Temperature
4100	Ambient temperature
4110	Excess ambient temperature
4120	Too low ambient temperature
4130	Temperature supply air
4140	Temperature air outlet
4200	Temperature device
4210	Excess temperature device
4220	Too low temperature device
4300	Temperature drive
4310	Excess temperature drive
4320	Too low temperature drive
4400	Temperature supply
4410	Excess temperature supply
4420	Too low temperature supply
5000	Device hardware
5100	Supply
5110	Supply low voltage
5111	U1 = supply +/- 15 V

Error code (hex)	Meaning
5112	U2 = supply +24 V
5113	U3 = supply +5 V
5114	U4 = manufacturer-specific
5115	U5 = manufacturer-specific
5116	U6 = manufacturer-specific
5117	U7 = manufacturer-specific
5118	U8 = manufacturer-specific
5119	U9 = manufacturer-specific
5120	Supply intermediate circuit
5200	Control
5210	Measurement circuit
5220	Computing circuit
5300	Operating unit
5400	Power section
5410	Output stages
5420	Chopper
5430	Input stages
5440	Contactors
5441	Contactor 1 = manufacturer-specific
5442	Contactor 2 = manufacturer-specific
5443	Contactor 3 = manufacturer-specific
5444	Contactor 4 = manufacturer-specific
5445	Contactor 5 = manufacturer-specific
5450	Fuses
5451	S1 = L1
5452	S2 = L2
5453	S3 = L3
5454	S4 = manufacturer-specific
5455	S5 = manufacturer-specific

Error code (hex)	Meaning
5456	S6 = manufacturer-specific
5457	S7 = manufacturer-specific
5458	S8 = manufacturer-specific
5459	S9 = manufacturer-specific
5500	Data storage
5510	Working memory
5520	Program memory
5530	Non-volatile data memory
6000	Device software
6010	Software reset (Watchdog)
6100	Internal software
6200	User software
6300	Data record
6301	Data record no. 1
…	from 2…14 corresponding
630F	Data record no. 15
6310	Loss of parameters
6320	Parameter error
6330	EtherCAT module configuration error
7000	Additional modules
7100	Power
7110	Brake chopper
7111	Failure brake chopper
7112	Overcurrent brake chopper
7113	Protective circuit brake chopper
7120	Motor
7121	Motor blocked
7122	Motor error or communication malfunction
7123	Motor tilted

Error code (hex)	Meaning
7200	Measurement circuit
7300	Sensor
7301	Tachometer fault
7302	Tachometer wrong polarity
7303	Resolver 1 fault
7304	Resolver 2 fault
7305	Incremental sensor 1 fault
7306	Incremental sensor 2 fault
7307	Incremental sensor 3 fault
7310	Speed
7320	Position
7400	Computation circuit
7500	Communication
7510	Serial interface no. 1
7520	Serial interface no. 2
7600	Data storage
8000	Monitoring
8100	Communication
8300	Torque control
8311	Excess torque
8312	Difficult start up
8313	Standstill torque
8321	Insufficient torque
8331	Torque fault
8400	Rotational speed controller
8500	Position controller
8600	Positioning controller
8611	Following error
8612	Reference limit

Error code (hex)	Meaning
8700	Sync controller
8800	Winding controller
9000	External error
F000	Additional functions
F001	Deceleration
F002	Sub-synchronous run
F003	Stroke operation
F004	Control
FF00	Manufacturer-specific
…	…
FFFF	Manufacturer-specific

Further information

Product and service inquiries

Address any inquiries about the product to your local ABB representative, quoting the type designation and serial number of the unit in question. A listing of ABB sales, support and service contacts can be found by navigating to www.abb.com/drives and selecting *Sales, Support and Service network*.

Product training

For information on ABB product training, navigate to www.abb.com/drives and select *Training courses*.

Providing feedback on ABB Drives manuals

Your comments on our manuals are welcome. Go to www.abb.com/drives and select *Document Library – Manuals feedback form (LV AC drives)*.

Document library on the Internet

You can find manuals and other product documents in PDF format on the Internet. Go to www.abb.com/drives and select *Document Library.* You can browse the library or enter selection criteria, for example a document code, in the search field.

Contact us

www.abb.com/drives
www.abb.com/solar
www.abb.com/windpower
www.abb.com/drivespartners

3AUA0000068940 Rev C (EN) 2012-07-09

Power and productivity
for a better world™