ABB Drives

User's Manual
Digital I/O Extension
FIO-01

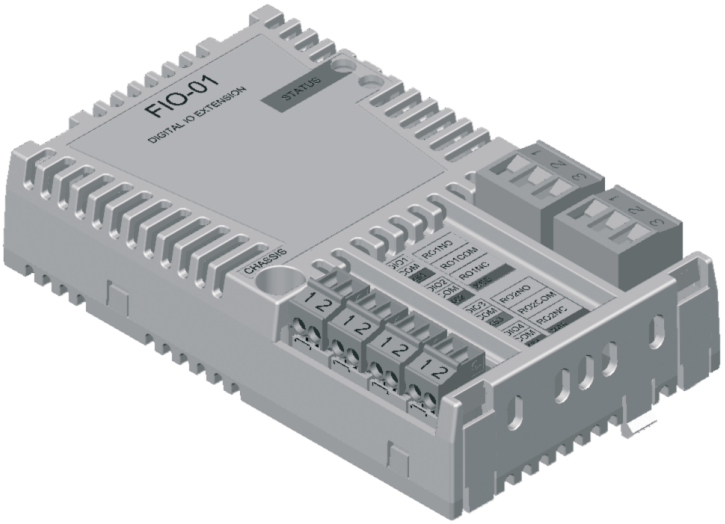

Digital I/O Extension
FIO-01

User's Manual

3AFE68784921 Rev D
EN
EFFECTIVE: 2010-08-10

© 2010 ABB Oy. All Rights Reserved.

Safety instructions

Overview

This chapter states the general safety instructions that must be followed when installing and operating the FIO-01 Digital I/O Extension.

In addition to the safety instructions given below, read the complete safety instructions of the specific drive you are working on.

These warnings are intended for all who work on the drive. Ignoring the instructions can cause physical injury or death, or damage the equipment.

General safety instructions

Warning! All electrical installation and maintenance work on the drive should be carried out by qualified electricians only.

The drive and adjoining equipment must be properly earthed.

Do not attempt any work on a powered drive. After switching off the mains, always allow the intermediate circuit capacitors to discharge for 5 minutes before working on the frequency converter, the motor or the motor cable. It is good practice to check (with a voltage indicating instrument) that the drive is in fact discharged before beginning work.

The motor cable terminals of the drive are at a dangerously high voltage when mains power is applied, regardless of motor operation.

There can be dangerous voltages inside the drive from external control circuits even when the drive mains power is shut off. Exercise appropriate care when working on the unit.

Table of Contents

Safety instructions ***5***

Overview 5
General safety instructions 5

Table of Contents ***7***

Introduction ***9***

Intended audience 9
Before you start 9
What this manual contains 9
Product and service inquiries 10
Product training 10
Providing feedback on ABB Drives manuals 10

Overview ***11***

Overview 11
The FIO-01 Digital I/O Extension module 11

Installation ***13***

Mounting 13
Terminal designations 14
Wiring 15
Programming 16

Fault tracing ***17***

Diagnostic LED 17

Technical data ***19***

Introduction

Intended audience

The manual is intended for the people who are responsible for commissioning and using the FIO-01 Digital I/O Extension. The reader is expected to have a basic knowledge of electrical fundamentals, electrical wiring practices and how to operate the drive.

Before you start

It is assumed that the drive is installed and the drive power supply is switched off before starting the installation of the extension module. Ensure that all dangerous voltages connected from external control circuits to the inputs and outputs of the drive are switched off.

In addition to conventional installation tools, have the drive manuals available during the installation as they contain important information not included in this manual. The drive manuals are referred to at various points of this document.

What this manual contains

This manual contains information on the wiring, configuration and use of the FIO-01 Digital I/O Extension.

Safety instructions are featured in the first few pages of this manual.

Overview contains a short description of the FIO-01.

Installation contains instructions for hardware settings, mounting and cabling.

Fault tracing explains LED indications.

Technical data contains detailed technical information.

Product and service inquiries

Address any inquiries about the product to your local ABB representative, quoting the type code and serial number of the unit in question. A listing of ABB sales, support and service contacts can be found by navigating to www.abb.com/drives and selecting *Sales, Support and Service network*.

Product training

For information on ABB product training, navigate to www.abb.com/drives and select *Training courses*.

Providing feedback on ABB Drives manuals

Your comments on our manuals are welcome. Go to www.abb.com/drives and select *Document Library – Manuals feedback form (LV AC drives)*.

Overview

Overview

This chapter contains a short description of the FIO-01 Digital I/O Extension.

The FIO-01 Digital I/O Extension module

The FIO-01 is a general purpose digital input/output extension. It offers 4 bidirectional digital inputs/outputs and 2 electromechanical relays.

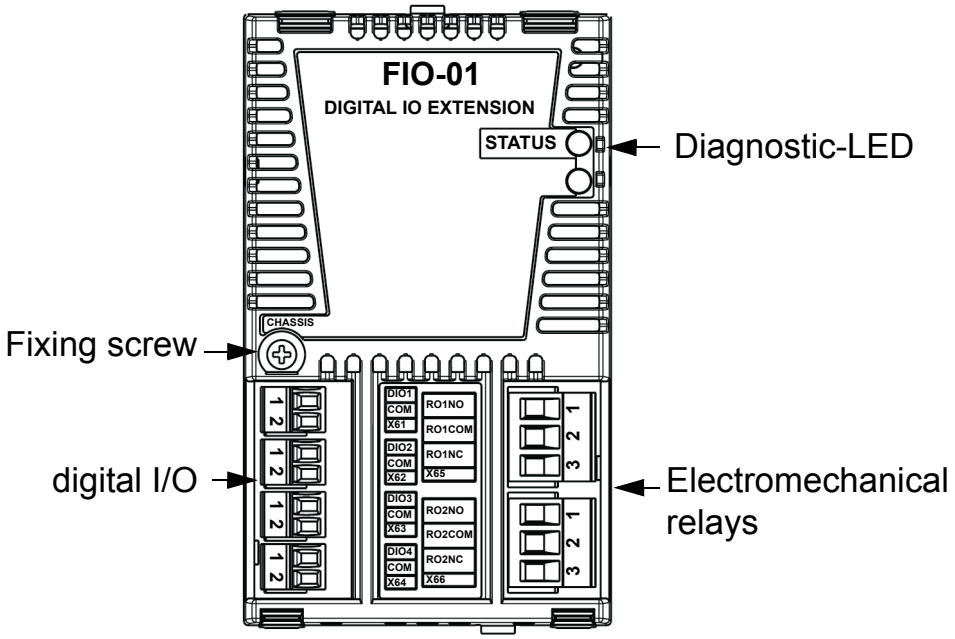

FIO-01 layout

Isolation areas

The following figure describes the different isolation areas of the module.

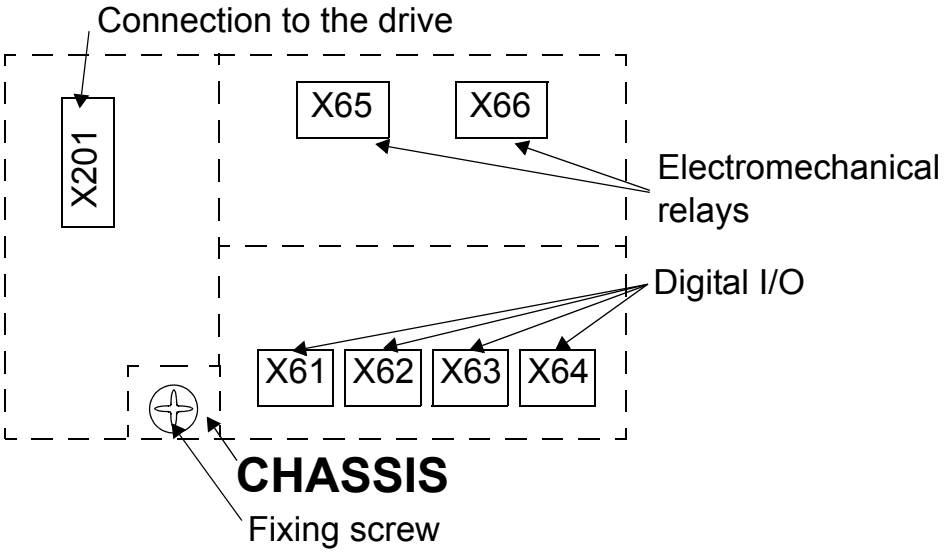

The fixing screw connects the chassis to ground.

Installation

Warning! Follow the safety instructions given in this guide and in the drive's hardware manual.

Mounting

Warning! Before installation, switch off the drive power supply. Wait for five minutes to ensure that the capacitor bank of the drive is discharged. Switch off all dangerous voltages connected from external control circuits to the inputs and outputs of the drive.

The FIO-01 is to be inserted into the option slot of the drive. The module is held in place with plastic retaining clips and one screw. On installation of the module, the signal and power connection to the drive is automatically made through a 20-pin connector.

Mounting procedure:

- Insert the module carefully into the option slot until the retaining clips lock the module into position.
- Fasten the screw (included) to the stand-off.

Note: Correct installation of the screw is essential for fulfilling the EMC requirements and for proper operation of the module.

Terminal designations

Marking		Description
X61		• **DIOx** = Digital I/O. Input (default), push-pull or open collector. Selection is made by parameter. See the drive firmware manual for more information. • **COM** = Ground reference on option board
1	DIO1	
2	COM	
X62		
1	DIO2	
2	COM	
X63		
1	DIO3	
2	COM	
X64		
1	DIO4	
2	COM	

Marking		Description		
X65				• **ROxNO** = Relay normally open • **COM** = Common • **ROxNC** = Relay normally connected
1	RO1NO		Relay 1	
2	RO1COM			
3	RO1NC			
X66				
1	RO2NO		Relay 2	
2	RO2COM			
3	RO2NC			

Wiring

The diagram presents some typical output types.

Push-pull	Open collector (Sinking)	Open emitter (Sourcing)
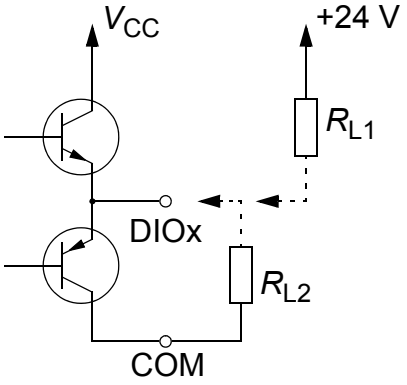	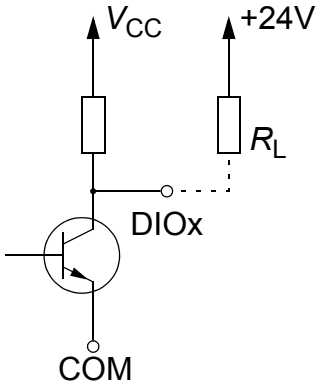	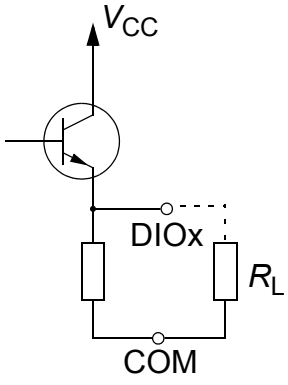
V_{CC} = Digital I/O power supply voltage R_L = Load at output channel		

Maximum cable size is 1.5 mm^2 (AWG 16) for digital signals and 2.5 mm^2 (AWG 14) for relays. The cable shields should be connected to the nearest ground. See the drive *Hardware Manual* for more information.

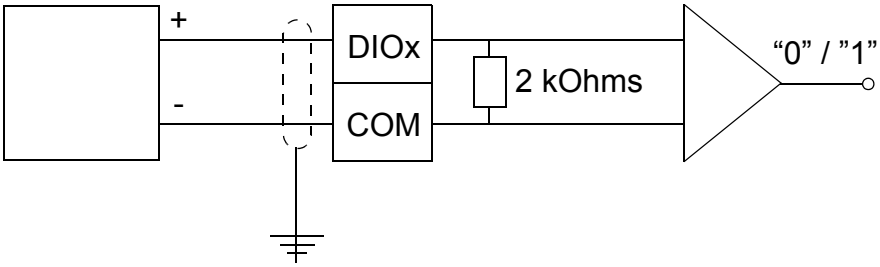

Digital I/O description

Note: Do not route signal cables parallel to power cables.

Tightening torque is 0.3 N·m (2.7 lbf·in) for the digital I/O plugs and 0.5 N·m (4.4 lbf·in) for the relay plugs.

Programming

The communication between the module and the drive is activated by a drive parameter. See the drive *Firmware Manual*.

Note: The new settings take effect only when the module is powered up.

Fault tracing

Diagnostic LED

	Colour	Description
STATUS LED	Green	OK
	Orange	Not initialized or communication fault to control unit
	Red	Power fault & not initialized or communication fault to control unit

If the green LED is unlit, the digital output is short circuited.

Technical data

Dimensions

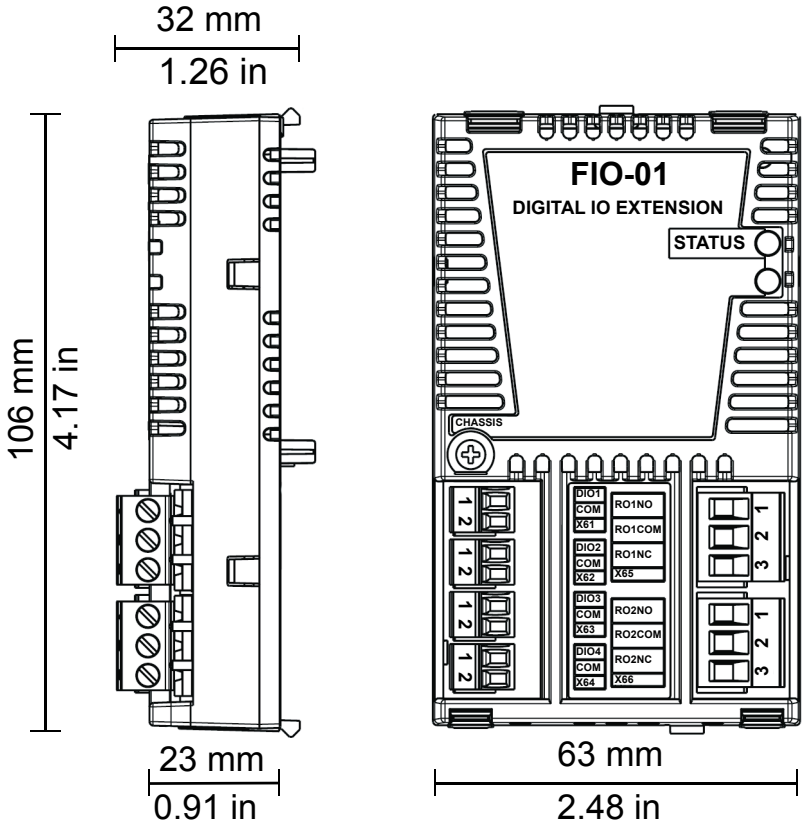

General

- Max. power consumption: 350 mA at 24 V
- Degree of protection: IP20
- Ambient conditions: The applicable ambient conditions specified for the drive in its *Hardware Manual* are in effect

Connectors

- 20 pin socket
- 3.5 mm pitch header with 2 poles, total of 4 connectors
- 5.0 mm pitch header with 3 poles in two connectors.

Digital I/O

- All DIOs programmable as
  - Input (default)
  - Push-pull output
  - Open collector output
- Input voltages max 30 V, reverse polarity protection
- 24 V logic levels for input: “0” < 5 V, “1” > 15 V (according to standard IEC 61131-2)
- Input impedance 2 kOhms
- If more than two digital outputs are used, current source is 25 mA. Otherwise current source is 50 mA. Current sink is 500 mA.
- Outputs are short-circuit proof
- Galvanic isolation as one group

Relays

- 240 VAC, 2 A resistive load
- 30 VDC, 5 A resistive load
- Varistors for inductive load protection.
- Reinforced isolation between channels and channel and ground

3AFE68784921 Rev D EN
EFFECTIVE: 2010-08-10

ABB Oy
Drives
P.O. Box 184
FIN-00381 HELSINKI
FINLAND
Telephone +358 10 22 11
Telefax +358 10 22 22681
Internet www.abb.com/drives

ABB Inc.
Automation Technologies
Drives & Motors
16250 West Glendale Drive
New Berlin, WI 53151
USA
Telephone 262 785-3200
1-800-HELP-365
Telefax 262 780-5135

ABB Beijing Drive Systems Co. Ltd.
No. 1, Block D,
A-10 Jiuxianqiao Beilu
Chaoyang District
Beijing, P.R. China, 100015
Telephone +86 10 5821 7788
Fax +86 10 5821 7618