Electric Drives and Controls | Hydraulics | Linear Motion and Assembly Technologies | Pneumatics | Service

Rexroth
Bosch Group

Rexroth Frequency Converter EFC 3600

R912003768
Edition 01

Operating Instructions

Title

Rexroth Frequency Converter
EFC 3600

Type of Documentation

Operating Instructions

Document Typecode

DOK-RCON03-EFC-3600***-IT01-EN-P

Internal File Reference

RS-9fc09331c365acb30a6846a000d53c8a-1-en-US-19

Record of Revision

Edition	Release Date	Notes
DOK-RCON03-EFC-3600***-IT01-EN-P	2013/01	First Edition

Copyright

© Bosch Rexroth (Xi'an) Electric Drives and Controls Co., Ltd. 2013

Copying this document, giving it to others and the use or communication of the contents thereof without express authority, are forbidden. Offenders are liable for the payment of damages. All rights are reserved in the event of the grant of a patent or the registration of a utility model or design (DIN 34-1).

Validity

The specified data is for product description purposes only and may not be deemed to be guaranteed unless expressly confirmed in the contract. All rights are reserved with respect to the content of this documentation and the availability of the product.

Published by

Bosch Rexroth (Xi'an) Electric Drives and Controls Co., Ltd.

Shangji Road 3999, Economic and Technological Development Zone, 710021 Xi'an, P.R. China

Tel. +49 (0) 9352 40 5060

Fax +49 (0) 9352 18 4941

Service.svc@boschrexroth.de

www.boschrexroth.com

English

Do not attempt to install or put these products into operation until you have completely read, understood and observed the documents supplied with the product.

If no documents in your language were supplied, please consult your Bosch Rexroth sales partner.

Deutsch

Nehmen Sie die Produkte erst dann in Betrieb, nachdem Sie die mit dem Produkt gelieferten Unterlagen und Sicherheitshinweise vollständig durchgelesen, verstanden und beachtet haben.

Sollten Ihnen keine Unterlagen in Ihrer Landessprache vorliegen, wenden Sie sich an Ihren zuständigen Bosch Rexroth Vertriebspartner.

Français

Ne mettez les produits en service qu'après avoir lu complètement et après avoir compris et respecté les documents et les consignes de sécurité fournis avec le produit.

Si vous ne disposez pas de la documentation dans votre langue, merci de consulter votre partenaire Bosch Rexroth.

Italiano

Mettere in funzione i prodotti solo dopo aver letto, compreso e osservato per intero la documentazione e le indicazioni di sicurezza fornite con il prodotto.

Se non dovesse essere presente la documentazione nella vostra lingua, siete pregati di rivolgervi al rivenditore Bosch Rexroth competente.

Español

Los productos no se pueden poner en servicio hasta después de haber leído por completo, comprendido y tenido en cuenta la documentación y las advertencias de seguridad que se incluyen en la entrega.

Si no dispusiera de documentación en el idioma de su país, diríjase a su distribuidor competente de Bosch Rexroth.

Português (Brasil)

Utilize apenas os produtos depois de ter lido, compreendido e tomado em consideração a documentação e as instruções de segurança fornecidas juntamente com o produto.

Se não tiver disponível a documentação na sua língua dirija-se ao seu parceiro de venda responsável da Bosch Rexroth.

Nederlands

Stel de producten pas in bedrijf nadat u de met het product geleverde documenten en de veiligheidsinformatie volledig gelezen, begrepen en in acht genomen heeft.

Mocht u niet beschikken over documenten in uw landstaal, kunt u contact opnemen met uw plaatselijke Bosch Rexroth distributiepartner.

Svenska

Använd inte produkterna innan du har läst och förstått den dokumentation och de säkerhetsanvisningar som medföljer produkten, och följ alla anvisningar.

Kontakta din Bosch Rexroth återförsäljare om dokumentationen inte medföljer på ditt språk.

Suomi

Ota tuote käyttöön vasta sen jälkeen, kun olet lukenut läpi tuotteen mukana toimitetut asiakirjat ja turvallisuusohjeet, ymmärtänyt ne ja ottanut ne huomioon.

Jos asiakirjoja ei ole saatavana omalla äidinkielelläsi, ota yhteys asianomaiseen Bosch Rexroth myyntiedustajaan.

Český

Před uvedením výrobků do provozu si přečtěte kompletní dokumentaci a bezpečnostní pokyny dodávané s výrobkem, pochopte je a dodržujte.

Nemáte-li k dispozici podklady ve svém jazyce, obraťte se na příslušného obchodního partnera Bosch Rexroth.

Magyar

Üzembe helyezés előtt olvassa el, értelmezze, és vegye figyelembe a csomagban található dokumentumban foglaltakat és a biztonsági útmutatásokat.

Amennyiben a csomagban nem talál az Ön nyelvén írt dokumentumokat, vegye fel a kapcsolatot az illetékes Bosch Rexroth-képviselővel.

Polski

Produkty wolno uruchamiać dopiero po przeczytaniu wszystkich dokumentów dostarczonych wraz z produktem oraz wskazówek dotyczących bezpieczeństwa i ich pełnym zrozumieniu. Wszystkich wskazówek tam zawartych należy przestrzegać.

Jeżeli brak jest dokumentów w Państwa języku, proszę się skontaktować z lokalnym partnerem handlowym Bosch Rexroth.

По русски

Вводить изделие в эксплуатацию разрешается только после того, как Вы полностью прочли, поняли и учли информацию, содержащуюся в поставленных вместе с изделием документах, а также указания по технике безопасности.

Если Вы не получили документацию на соответствующем национальном языке, обращайтесь к полномочному представителю фирмы Bosch Rexroth.

Română

Punerea în funcţiune a produselor trebuie efectuată după citirea, înţelegerea şi respectarea documentelor şi instrucţiunilor de siguranţă, care sunt livrate împreună cu produsele.

În cazul în care documentele nu sunt în limba dumneavoastră maternă, contactați furnizorul dumneavoastră competent pentru Bosch Rexroth.

Türkçe

Ürünleri beraberinde teslim edilen evrakları ve güvenlik talimatlarını tamamen okuduktan, anladıktan ve dikkate aldıktan sonrak i,leme koyun.

Şayet size ulusal dilinizde evraklar teslim edilmemiş ise, sizinle ilgili olan Bosch Rexroth dağıtım ortağınla irtibata geçin.

中文

请在完全通读、理解和遵守随同产品提供的资料和安全提示后才使用这些产品。

若产品资料还未翻译成您本国语言，请联系 Bosch Rexroth 相应的销售伙伴。

日本語

本製品をお使いになる前に、必ず同封の文書および安全注意事項を全部お読みになり理解した上で指示に従って本製品を使用していただきますようお願いいたします。

同封の文書がお客様の言語で書かれていない場合は、どうぞ Bosch Rexroth 製品の販売契約店までお問い合わせください。

한국어

먼저 회사의 제품을 받으신 다음 제품과 함께 배송된 안내서 및 안전에 관한 지침서를 충분히 숙지하여 이를 준수하여 주십시오.

귀하의 모국어로 된 안내서가 배송되지 않았다면 Bosch Rexroth 대리점에 알려주시기 바랍니다.

Table of Contents

Page

1 Introduction to the Documentation..... 9

2 Safety Instructions for Electric Drives and Controls..... 10
2.1 General Information..... 10
2.2 Qualifications of Operating Personnel..... 11
2.3 Declarations on Property Loss and Product Damage..... 11
2.4 Explanation of Safety Symbols and Degrees of Hazard Seriousness..... 12
2.5 Hazards by Improper Use..... 12
2.6 Instructions with Regard to Specific Dangers..... 13
2.7 Protection Against Electric Shock by Protective Low Voltage (PELV)..... 15
2.8 Protection Against Dangerous Movements..... 15
2.9 Protection Against Magnetic and Electromagnetic Fields During Operation and Mounting..... 16
2.10 Protection Against Contact with Hot Parts..... 17
2.11 Protection During Handling and Mounting..... 18

3 Important Directions for Use..... 19
3.1 Appropriate Use..... 19
3.2 Inappropriate Use..... 19

4 Delivery and Storage..... 20
4.1 Product Identification..... 20
4.2 The Scope of Supply..... 21
4.3 Transport of the Components..... 22
4.4 Storage of the Components..... 22

5 Mounting and Installation..... 23
5.1 EFC 3600 Dimensions Figure..... 23
5.2 EFC 3600 Dimensions..... 25
5.3 EFC 3600 Mounting..... 26
5.4 Block Diagram..... 28
5.5 Notes on Main Circuit Wiring..... 30
5.6 Main Circuit Wiring Diagram..... 32

Table of Contents

Page

5.7 Main Circuit Terminals..... 33
5.8 Main Circuit Terminals Description..... 33
5.9 Cable and Fuse Dimensions..... 34
5.10 Main Circuit Wiring Steps..... 36
5.11 Notes on Control Circuit Wiring..... 37
5.12 Control Circuit Terminals..... 37
5.13 Control Circuit Terminals Description..... 38
5.14 NPN / PNP Switch SW for the Digital Inputs..... 39
5.15 NPN and PNP Modes..... 40
5.16 Analog Input Terminals (+10 V, Vr1, GND,+I) 41
5.17 Recommendations on Control Circuit Wiring..... 41
5.18 Control Circuit Wiring Steps..... 42

6 Operating Panel..... 43
6.1 Figure and Description..... 43
6.2 Seven-segment Display..... 43
6.3 LED Indicator..... 44
6.4 Menu Structure..... 45
6.5 Example of Operating Panel Operation..... 46

7 Commissioning..... 47
7.1 Checking and Preparation before Commissioning..... 47
7.2 Commissioning Process..... 48
7.3 EFC 3600 Basic Parameter Fast Settings..... 50
7.4 Restore Parameters to Factory Defaults..... 51
7.5 Solutions for Simple Faults during Commissioning..... 52

8 Parameter Settings..... 53
8.1 Group b0: System Parameters..... 53
8.2 Group b1: Basic Parameters..... 59
8.3 Group S0: V/F control..... 73
8.4 Group S2: Motor and Encoder Parameters..... 82
8.5 Group S3: Running Parameters..... 85
8.6 Group E0: Input Terminal Parameters..... 91
8.7 Group E1: Output Terminal Parameters..... 100

Table of Contents

Page

8.8 Group E2: Multi-speed and Simple PLC 107
8.9 Group E3: PID Control 111
8.10 Group E4: Error and Protection 115
8.11 Group H0: Communication 122

9 Diagnosis 124
9.1 Diagnosis Messages when Booting the Device 124
9.2 Diagnosis on Parameter Operation 124
9.3 Diagnosis for Power Down/Drop 126
9.4 Diagnosis on Warnings 127
9.5 Diagnosis on Errors 128

10 Technical Data 141
10.1 General Technical Data 141
10.2 Electrical Parameter 144
10.3 Derating of Electrical Data 145

11 Electromagnetic Compatibility (EMC) 147
11.1 EMC Requirements 147
11.2 Ensuring the EMC Requirements 154
11.3 EMC Measures for Design and Installation 156

12 Accessories 166
12.1 Brake Resistor 166
12.2 Communication Interface 171
12.3 Accessories for Control Cabinet Mounting 171

13 Communication Protocols 172
13.1 Brief Introduction 172
13.2 ModBus Protocol 172

14 Maintenance 187
14.1 Safety Instructions 187

Table of Contents

Page

14.2 Daily Inspection ... 187
14.3 Periodic Inspection ... 188
14.4 Operating Panel Removal and Mounting ... 189
14.5 Fan Removal and Mounting ... 191

15 Service and Support ... 193

16 Disposal and Environmental Protection ... 194
16.1 Disposal ... 194
16.2 Environmental Protection ... 194

17 Appendix ... 195
17.1 Appendix 1: Abbreviations ... 195
17.2 Appendix 2: Parameter List ... 195
17.3 Appendix 3: Type Coding ... 225

Index ... 231

1 Introduction to the Documentation

⚠ WARNING **Personal injury and property damage caused by incorrect operations of applications, machines and installations!**

Do not attempt to install or put these products into operation until you have completely read, understood and observed the documents supplied with the product.

If no documents in your language were supplied, please consult your Bosch Rexroth sales partner.

Chapters and Contents

Chapter	Title	Description
1	Introduction to the Documentation	Overview
2	Safety Instructions for Electric Drives and Controls	Safety cautions
3	Important Directions for Use	
4	Delivery and Storage	Product information
5	Mounting and Installation	
6	Operating Panel	Actual applications (for operators and repairers)
7	Commissioning	
8	Parameter Settings	
9	Diagnosis	
10	Technical Data	
11	Electromagnetic Compatibility (EMC)	
12	Accessories	
13	Communication Protocols	
14	Maintenance	Maintenance information
15	Service and Support	Service information
16	Disposal and Environmental Protection	Environmental information
17	Appendix	Additional information
-	Index	Index information
-	Notes	Notes section

Fig.1-1: Chapters and contents

Feedback

Your experience is important for us to improve products and this Operating Instructions. We will be pleased to receive your feedback on any mistake or request for variation.

Please send your feedback via email to:

service.svc@boschrexroth.de

2 Safety Instructions for Electric Drives and Controls

2.1 General Information

Read and understand these safety instructions and all user documentation prior to working with the device. If you do not have the user documentation for the device, contact your responsible Bosch Rexroth sales representative or check www.boschrexroth.com/various/utilities/mediadirectory/ for available downloads of Safety Notes and Operating Instructions. If the device is resold, rented and/or passed on to others in any other form, then these safety instructions (official language version of the user) must be delivered with the device.

⚠ WARNING

Improper use of these devices, failure to follow the safety instructions in this document or tampering with the product, including disabling of safety devices, may result in material damage, bodily harm, electric shock or even death!

Read these instructions before the initial start-up of the equipment in order to eliminate the risk of bodily harm or material damage. Follow these safety instructions at all times. Bosch Rexroth is not liable for damages resulting from failure to observe the warnings provided in this documentation.

- The devices have been designed for installation in industrial machinery.
- Proper and correct transport, storage, assembly and installation as well as care in operation and maintenance are prerequisites for optimal and safe operation of this device.
- Only use spare parts and accessories approved by the manufacturer.
- The information given in the documentation of the product with regard to the use of the delivered components contains only examples of applications and suggestions.
- Follow all safety regulations and requirements for the specific application as practiced in the country of use.
- The ambient conditions given in the product documentation must be observed.

- The machine and installation manufacturer must
  - make sure that the delivered components are suited for each individual application and check the information given in this document with regard to the use of the components.
  - make sure that this application complies with the applicable safety regulations and standards and carry out required measures, modifications and complements.
- Start-up of the delivered components is only permitted after the machine or installation in which they are installed complies with the national standards, safety instructions and application standards.
- Operation is only permitted if the national EMC standards for the application are met.
- The machine or installation manufacturer is responsible for compliance with the limiting values as prescribed in national standards.

☞ Technical data, connections and operational conditions are specified in the product documentation and must be followed at all times.

2.2 Qualifications of Operating Personnel

- Only assign trained and qualified persons to work with electrical installations.
- Only persons who are trained and qualified for the use and operation of the device may work on this device or within its proximity. They need to have adequate knowledge in product assembly, mounting and operation. They are capable of understanding all warning messages marked in the instructions and respective prevention measures.
- Furthermore, they must be trained, instructed and qualified to switch electrical circuits and devices on and off in accordance with technical safety regulations and to mark them according to the requirements of safe work practices. They must have adequate safety equipment and be trained in first aid.

2.3 Declarations on Property Loss and Product Damage

- Safety-relevant are all such applications which can cause danger to persons and material damage.
- Only use safety-relevant applications that are clearly and explicitly approved in the Operating Instructions. If this is not the case, they are excluded.
- Read the operating, maintenance and safety instructions in your language before starting up the machine. If you find that you cannot completely understand the documentation for your product, please ask your supplier to clarify.

2.4 Explanation of Safety Symbols and Degrees of Hazard Seriousness

The safety instructions describe the following degrees of hazard seriousness. The degree of hazard seriousness informs about the consequences resulting from non-compliance with the safety instructions.

Safety Symbols	Degree of Hazard Seriousness
⚠ DANGER	Death or severe bodily harm will occur.
⚠ WARNING	Death or severe bodily harm may occur.
⚠ CAUTION	Minor or moderate injury or property damage may occur.

Fig.2-1: Safety symbols and degree of hazard

2.5 Hazards by Improper Use

⚠ DANGER	High electric voltage and high working current! Risk of death or severe bodily injury by electric shock!
⚠ DANGER	Dangerous movements! Danger to life, severe bodily harm or material damage by unintentional motor movements!
⚠ WARNING	High electric voltage because of incorrect connection! Risk of death or bodily injury by electric shock!
⚠ WARNING	Health hazard to persons with heart pacemakers, metal implants and hearing aids in proximity to electrical equipment!

⚠ CAUTION **Hot surfaces on device housing! Danger of injury! Danger of burns!**

⚠ CAUTION **Risk of injury by improper handling! Risk of bodily injury by bruising, shearing, cutting, hitting, or improper handling of pressurized lines!**

2.6 Instructions with Regard to Specific Dangers

Protection Against Contact with Electrical Parts

☞ This section only concerns devices and drive components with voltages of more than 50 V. Contact with parts conducting voltages above 50 V can cause personal danger and electric shock. When operating electrical equipment, it is unavoidable that some parts of the devices conduct dangerous voltage.

⚠ DANGER **High electrical voltage! Danger to life, electric shock and severe bodily injury!**

- Only those trained and qualified to work with or on electrical equipment are permitted to operate, maintain and repair this equipment.
- Follow general construction and safety regulations when working on electrical power installations.
- Before switching on the device, the equipment grounding conductor must have been non-detachably connected to all electrical equipment in accordance with the connection diagram.
- Do not operate electrical equipment at any time, even for brief measurements or tests, if the equipment grounding conductor is not permanently connected to the mounting points of the components provided for this purpose.
- Before working with electrical parts with voltage potentials higher than 50 V, the device must be disconnected from the mains voltage or power supply unit.
- With electrical drive and filter components, observe the following:
  - Wait for 10 minutes after switching off power to allow capacitors to discharge before beginning to work.

  - Measure the voltage on the capacitors before beginning to work to make sure that the equipment is safe to touch.
- Never touch the electrical connection points of a component while power is turned on.
- Install the covers and guards provided with the equipment properly before switching the device on. Before switching the equipment on, cover and safeguard live parts safely to prevent contact with those parts.
- A residual-current-operated circuit-breaker cannot be used for electric drives! Indirect contact must be prevented by other means, for example, by an over current protective device according to the relevant standards.
- Secure built-in devices from direct touching of electrical parts by providing an external housing. For example: a control cabinet.

☞ Always observe the above requirements, in accordance with relevant international standards.

With electrical drive and filter components, observe the following:

⚠ DANGER **High housing voltage and large leakage current!**
Risk of death or bodily injury by electric shock!

- Before switching on, the housings of all electrical equipment and motors must be connected or grounded with the equipment grounding conductor to the grounding points. This is also applicable before short tests.
- The equipment grounding conductor of the electrical equipment and the units must be non-detachably and permanently connected to the power supply unit at all times.
- Over the total length, use copper wire of a cross section of a minimum of 10 mm^2 for this equipment grounding connection!
- Before start-up, also in trial runs, always attach the equipment grounding conductor or connect with the ground wire. Otherwise, high voltages may occur at the housing causing electric shock.

2.7 Protection Against Electric Shock by Protective Low Voltage (PELV)

⚠ WARNING **High electric voltage by incorrect connection! Risk of death or bodily injury by electric shock!**

- To all connections and terminals with voltages between 0 and 50 V, only devices, electrical components, and conductors may be connected which are equipped with a PELV (Protective Extra-Low Voltage) system.
- Connect only voltages and circuits which are safely isolated from dangerous voltages. Safe isolation is achieved for example by isolating transformers, safe optocouplers or battery operation without mains connection.

2.8 Protection Against Dangerous Movements

Dangerous movements can be caused by faulty control of connected motors. Some common examples are:

- Improper or wrong wiring of cable connections
- Incorrect operation of the equipment components
- Wrong input of parameters before operation
- Malfunction of sensors, encoders and monitoring devices
- Defective components
- Software or firmware errors

Dangerous movements can occur immediately after equipment is switched on or even after an unspecified time of trouble-free operation.

The monitoring in the drive components will normally be sufficient to avoid faulty operation in the connected drives. Regarding personal safety, especially the danger of bodily harm and material damage, this alone cannot be relied upon to ensure complete safety. Until the integrated monitoring functions become effective, it must be assumed in any case that faulty drive movements will occur. The extent of faulty drive movements depends upon the type of control and the state of operation.

⚠ DANGER **Dangerous movements! Danger to life, risk of injury, severe bodily harm or material damage!**

- For the above reasons, ensure personal safety by means of qualified and tested higher-level monitoring devices or measures integrated in the installation. They have to be provided for by the user according to the specific conditions within the installation and a hazard and fault analysis. The safety regulations applicable for the instal-

lation have to be taken into consideration. Unintended machine motion or other malfunction is possible if safety devices are disabled, bypassed or not activated.

To avoid accidents, bodily harm and/or material damage:

- Keep free and clear of the machine's range of motion and moving parts. Possible measures to prevent people from accidentally entering the machine's range of motion:
  - Use safety fences
  - Use of safety guard (cover)
  - Use of protective coverings
  - Install light curtains or light barrier
- Fences and coverings must be strong enough to resist maximum possible momentum.
- Mount the emergency stop switch in the immediate reach of the operator. Verify that the emergency stop works before start-up. Don't operate the device if the emergency stop is not working.
- Isolate the drive power connection by means of an emergency stop circuit or use a safety related starting lockout to prevent unintentional start.
- Make sure that the drives are brought to a safe standstill before accessing or entering the danger zone.

The standard equipment motor brake or an external brake controlled directly by the drive controller are not sufficient to guarantee personal safety!

- Disconnect electrical power to the equipment using a master switch and secure the switch against reconnection for:
  - Maintenance and repair work
  - Cleaning of equipment
  - Long periods of discontinued equipment use
- Prevent the operation of high-frequency, remote control and radio equipment near electronics circuits and supply leads. If the use of such devices cannot be avoided, verify the system and the installation for possible malfunctions in all possible positions of normal use before initial start-up. If necessary, perform a special electromagnetic compatibility (EMC) test on the installation.

2.9 Protection Against Magnetic and Electromagnetic Fields During Operation and Mounting

Magnetic and electromagnetic fields generated by current-carrying conductors and permanent magnets in motors represent a serious personal danger to those with heart pacemakers, metal implants and hearing aids.

⚠ WARNING	**Health hazard for persons with heart pacemakers, metal implants and hearing aids in proximity to electrical equipment!**

- Persons with heart pacemakers and metal implants are not permitted to enter the following areas:
  - Areas in which electrical equipment and parts are mounted, being operated or commissioned
  - Areas in which parts of motors with permanent magnets are being stored, repaired or mounted
- If it is necessary for somebody with a pacemaker to enter such an area, a doctor must be consulted prior to doing so. The interference immunity of present or future implanted heart pacemakers differs greatly, so that no general rules can be given.
- Those with metal implants or metal pieces, as well as with hearing aids must consult a doctor before they enter the areas described above. Otherwise health hazards may occur.

2.10 Protection Against Contact with Hot Parts

⚠ CAUTION	**Hot surfaces at motor housings, on drive controllers or chokes! Danger of injury! Danger of burns!**

- Do not touch surfaces of device housings and chokes in the proximity of heat sources! Danger of burns!
- Do not touch housing surfaces of motors! Danger of burns!
- According to operating conditions, temperatures can be higher than 60 °C, 140 °F during or after operation.
- Before accessing motors after having switched them off, let them cool down for a sufficiently long time. Cooling down can require up to 140 minutes! Roughly estimated, the time required for cooling down is 5 times the thermal time constant specified in the Technical Data.
- After switching drive controllers or chokes off, wait for 15 minutes to allow them to cool down before touching them.
- Wear safety gloves or do not work at hot surfaces.
- For certain applications, the manufacturer of the end product, machine or installation, according to the respective safety regulations, has to take measures to avoid injuries caused by burns in the end application. These measures can be, for example: warnings, guards (shielding or barrier), technical documentation.

2.11 Protection During Handling and Mounting

In unfavorable conditions, handling and assembling certain parts and components in an improper way can cause injuries.

⚠ CAUTION	**Risk of injury by improper handling! Risk of bodily injury by bruising, shearing, cutting, hitting, or improper handling of pressurized lines!**

- Observe the general construction and safety regulations on handling and assembly.
- Use suitable devices for assembly and transport.
- Avoid jamming and bruising by appropriate measures.
- Always use suitable tools. Use specific tools in different circumstances.
- Use lifting equipment and tools in the correct manner.
- If necessary, use suitable protective devices (for example safety goggles, safety shoes, safety gloves).
- Do not stand under hanging loads.
- Immediately clean up any spilled liquids because of the danger of skidding.

3 Important Directions for Use

3.1 Appropriate Use

Bosch Rexroth products represent state-of-the-art developments and manufacturing. They are tested prior to delivery to ensure operating safety and reliability.

The products can only be used in the appropriate way. Otherwise, situations resulting in property damage and personal injury may occur.

☞ Bosch Rexroth as manufacturer is not liable for any damages resulting from inappropriate use. In such cases, the guarantee and the right to payment of damages resulting from inappropriate use are forfeited. The user alone carries all responsibility of the risks.

Before using Bosch Rexroth products, make sure that all the pre-requisites for appropriate use of the products are satisfied.

- Personnel that in any way or form use our products must first read and understand the relevant safety instructions and be familiar with appropriate use.
- If the products take the form of hardware, they must remain in their original state, in other words, no structural changes are permitted.
- It is not permitted to decompile software products or alter source codes.
- Do not mount damaged or faulty products or use them in operation.
- Make sure that the products have been installed in the manner described in the relevant documentation.

3.2 Inappropriate Use

Using the frequency converters outside of the operating conditions described in this manual and outside of the indicated technical data and specifications is defined as "**inappropriate use**".

Frequency converters shall not be used under following conditions:

- They are subject to operating conditions that do not meet the specified ambient conditions. These include, for example, operation under water, extreme temperature fluctuations or extremely high temperatures.
- Furthermore, the frequency converters shall not be used in applications which have not been expressly authorized by Rexroth. Please carefully follow the specifications outlined in the general Safety Instructions!

4 Delivery and Storage

4.1 Product Identification

4.1.1 Checking Information on Packing Nameplate

Check if the model information on the packing nameplate is the same as you ordered **immediately** after receipt/unpacking. If the model is wrong, please contact Bosch Rexroth distributor for replacement.

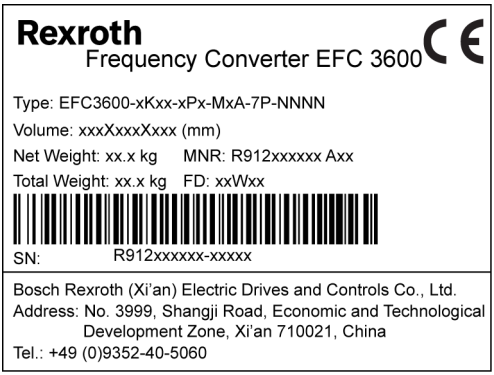

Fig.4-1: Packing nameplate

For the meaning of the typecode, please refer to chapter 17.3 "Appendix 3: Type Coding" on page 225.

4.1.2 Checking Information on Frequency Converter Nameplate

Check if the model information on the frequency converter nameplate is the same as you ordered **immediately** after unpacking. If the model is wrong, please contact Bosch Rexroth distributor for replacement.

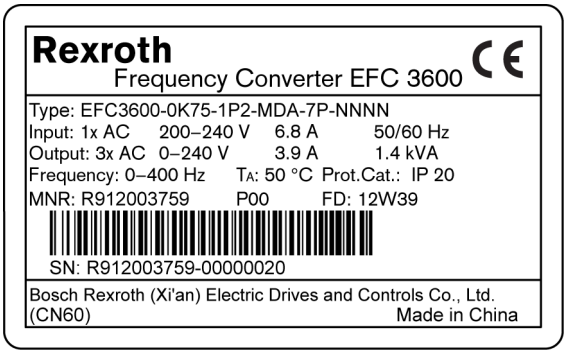

Fig.4-2: Frequency converter nameplate

4.1.3 Visual Inspection of the Frequency Converter

Check the unit for transport damages, e.g. deformation or loose parts, **immediately** after unpacking. In case of damage, contact the forwarder at once and arrange for a thorough review of the situation.

☞ This is also applicable if the packaging is undamaged.

4.2 The Scope of Supply

Standard model

- Frequency Converter EFC 3600, protection class of IP20
  (Control cabinet mounting)
- Integrated brake chopper
- Operating panel
- Safety notes

Optional accessories

- Operating instructions
- Brake resistor
- RS232/485 adapter
- Adapter interface connection cable

- Operating panel cable for cabinet mounting

4.3 Transport of the Components

Ambient and operating conditions-Transport

Description	Symbol	Unit	Value
Temperature range	T_{a_tran}	°C	-25…70
Relative humidity	–	%	5…95
Absolute humidity	–	g/m^3	1…60
Climate category (IEC 721)	–	–	2K3
Moisture condensation	–	–	not allowed
Icing	–	–	not allowed

Fig.4-1: Transport conditions

4.4 Storage of the Components

⚠ CAUTION **Damage to the components caused by long storage periods!**

Some components contain electrolytic capacitors which may deteriorate during storage.

When storing these components for a long period of time, remember to operate them once a year:

- Run frequency converter EFC 3600 under power U_{LN} for at least 1 hour.
- For more information of electrolytic capacitors, please contact service.

Ambient and operating conditions-Storage

Description	Symbol	Unit	Value
Temperature range	T_{a_store}	°C	-25…55
Relative humidity	–	%	5…95
Absolute humidity	–	g/m^3	1…29
Climate category (IEC 721)	–	–	1K3
Moisture condensation	–	–	not allowed
Icing	–	–	not allowed

Fig.4-2: Storage conditions

5 Mounting and Installation

5.1 EFC 3600 Dimensions Figure

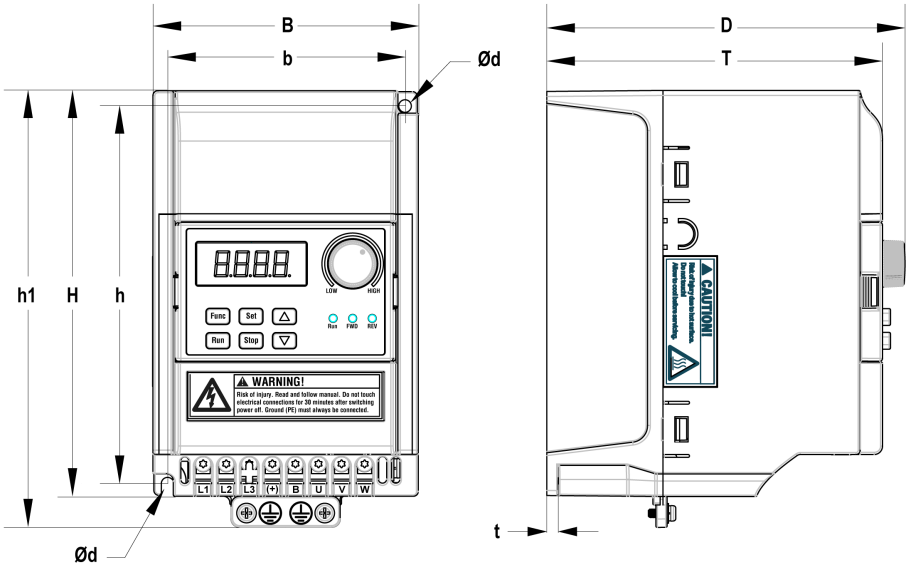

Fig.5-1: EFC 3600 figure of model A, B and C

Mounting and Installation

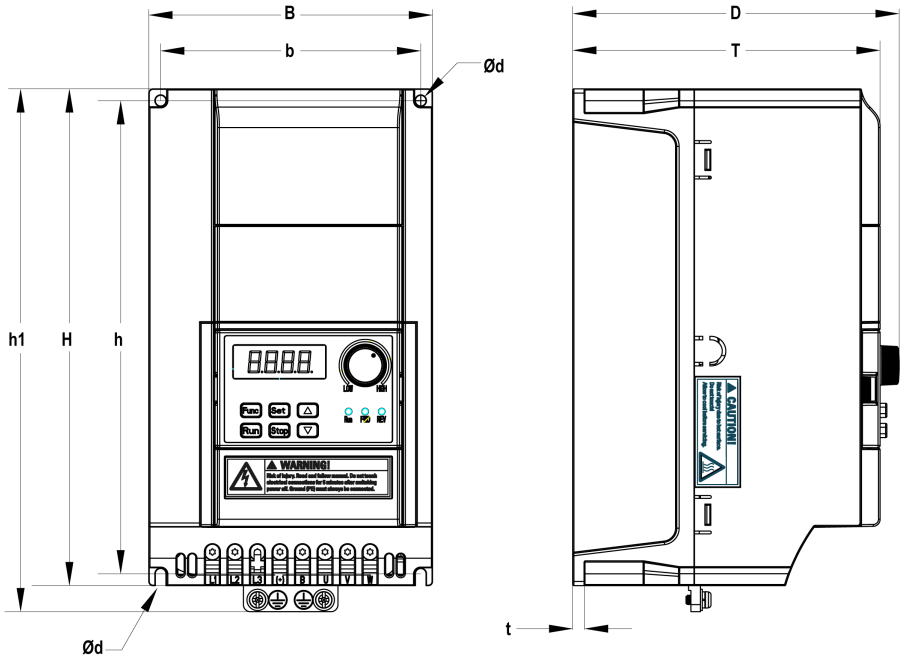

Fig.5-2: EFC 3600 figure of model D

5.2 EFC 3600 Dimensions

Model	EFC 3600 type code①	Dimensions [mm]									Screw size②③	Net weight [kg]
		B	b	H	h	h1	Ød	D	T	t		
A	0K40-1P2-MDA	90	80	135	125	146	4.5	113	105	5	M4	0.96
B	0K40-3P4-MDA	95	85	145	135	156	4.5	128	120	5	M4	1.18
	0K75-1P2-MDA											1.24
	0K75-3P4-MDA											1.26
C	1K50-1P2-MDA	95	85	185	175	196	4.5	133	125	5	M4	1.61
	1K50-3P4-MDA											1.52
D	2K20-1P2-MDA	120	110	210	200	221	4.5	138	130	5	M4	2.35
	2K20-3P4-MDA											2.25
	4K00-3P4-MDA											2.36

Fig.5-1: EFC 3600 dimensions

①: The complete type code for frequency converter is: EFC3600-xKxx-xPx-MDA-7P-NNNN, for details please see chapter 17.3 "Appendix 3: Type Coding" on page 225.

②: 2 screws are needed for mounting of EFC 3600 model A, B or C.

③: 4 screws are needed for mounting of EFC 3600 model D.

5.3 EFC 3600 Mounting

The equipment must be sufficiently ventilated to avoid overheating. The recommended minimum clearances between the frequency converter and adjacent items, which may disturb the free flow of air, are given below.

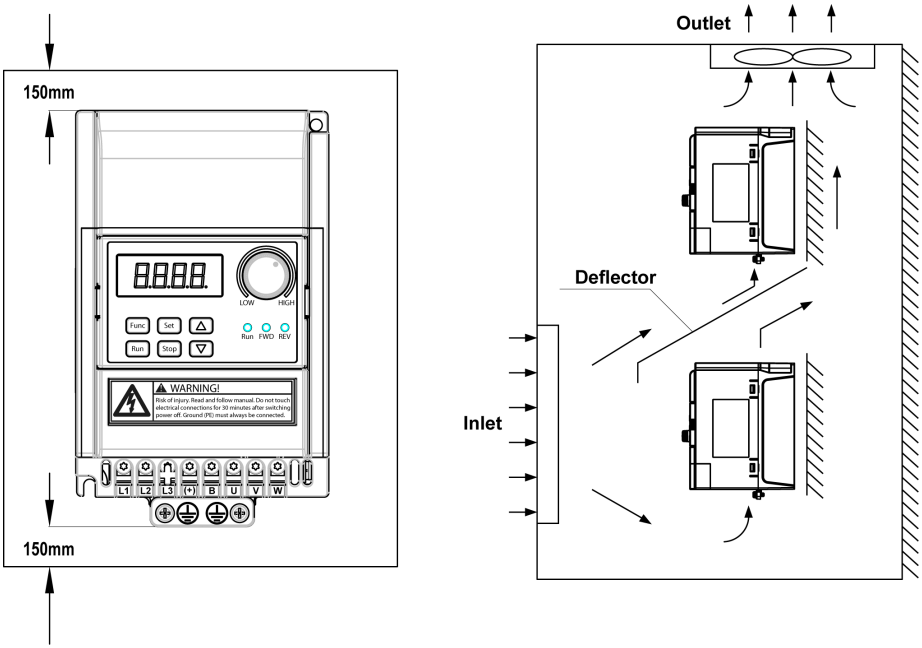

Fig.5-3: EFC 3600 mounting

- EFC 3600 must be vertically installed.
- EFC 3600 has no side ventilation hole, which enables parallel mounting of EFC 3600 with zero distance.
- If one frequency converter is arranged above another, make sure that the upper limit of air temperature into the inlet is not exceeded (See fig. 10-1 "General technical data" on page 141).
- A baffle plate is recommended between the frequency converters to prevent the rising hot air being drawn into the upper frequency converter.

⚠ CAUTION **Risks of damage to the components!**

Only operate the components in their allowed mounting positions.

Allowed mounting position of the components:

Only the mounting position G1 is allowed for EFC 3600. Please refer to the figure below.

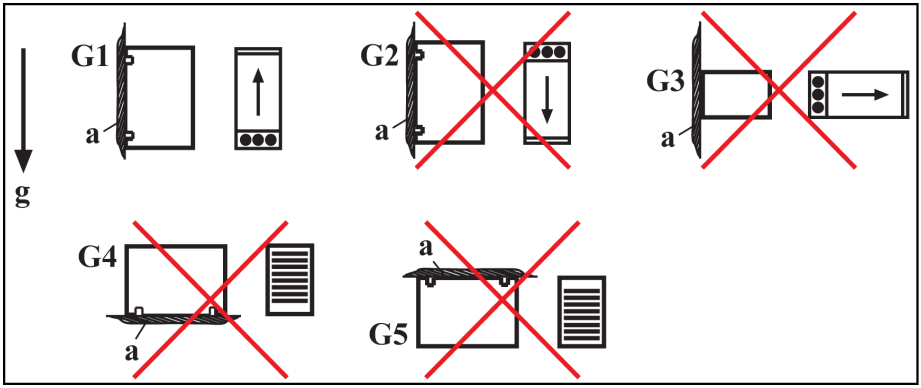

a Mounting surface
g Direction of gravitational force
G1 Normal mounting positions. The natural convection supports the forced cooling air current. This avoids the generation of pockets of heat in the component.
G2 180° to normal mounting position
G3 Turned by 90° from vertical to horizontal mounting position
G4 Bottom mounting; mounting surface on bottom of control cabinet
G5 Top mounting; mounting surface at top of control cabinet

Fig.5-4: Frequency converter mounting position

5.4 Block Diagram

5.4.1 1-phase 200 VAC Class

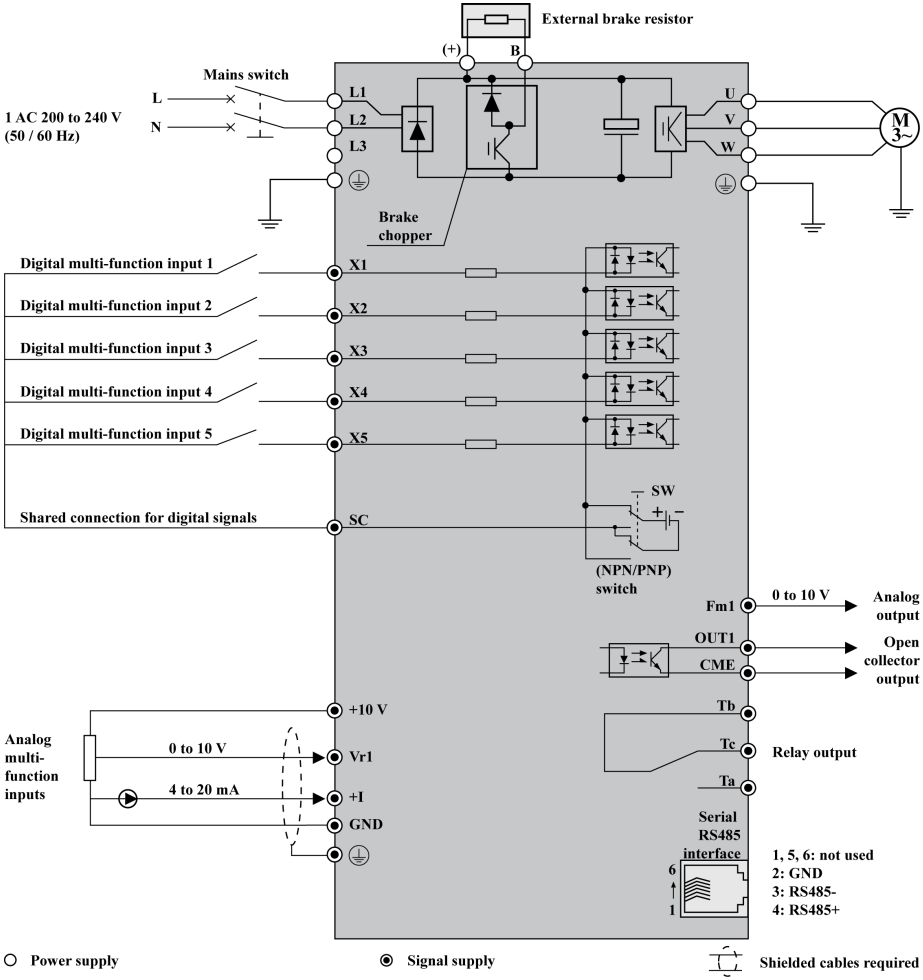

Fig.5-5: Block diagram (1AC)

☞ It is recommended to use shielded cable to connect the motor.

5.4.2 3-phase 400 VAC Class

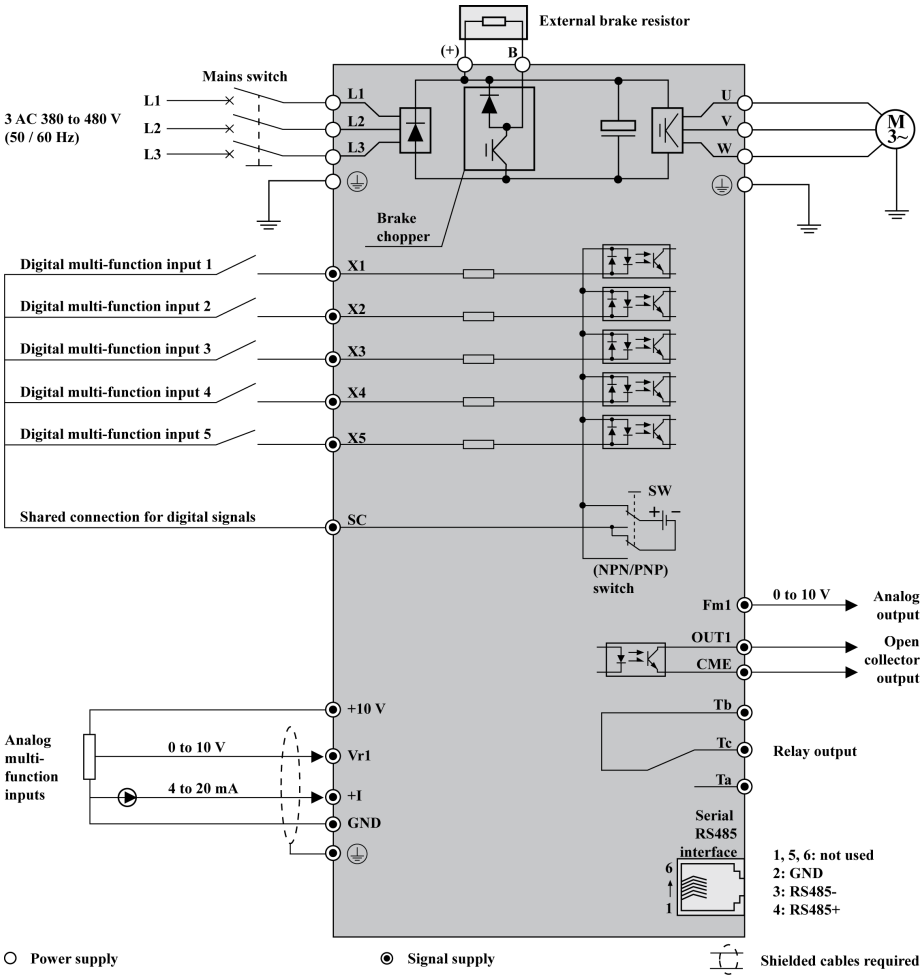

Fig.5-6: Block diagram (3AC)

It is recommended to use shielded cable to connect the motor.

5.5 Notes on Main Circuit Wiring

- Connect power supply only to the mains power supply terminals (L1, L2 and L3 for 3-phase; L1 and L2 for 1-phase). Connecting power supply to other terminals will damage the frequency converter. Ensure that the power supply voltage is within the allowable voltage range specified on the nameplate.
- The grounding terminal must be properly grounded to avoid electric shock and fire and reduce interference noise.
- Insulated crimp terminals must be used to connect terminals and conductors to ensure the reliability of connection.
- After wiring connection, remove all residual loose wires, which may fall into the frequency converter and cause a failure. Be careful not to allow swarf from drilling entering the frequency converter. Check the following points after the circuit connection is completed.
  1. Are all connections correct?
  2. Are there any missing connections?
  3. Do short circuits exist between terminals and wires or ground?
- To make changes in wiring, disconnect the power supply and wait for 10 minutes to allow the capacitor of the DC circuit to discharge.
- Wiring shall be carried out with wire sizes in accordance with relevant electrical codes.
- A fuse must be provided between the main power supply terminals and the AC input power supply. It is preferable to connect a magnetic contactor (MC) in series to ensure both the action of frequency converter protection and shutting off of power supply (Surge absorbers should be added at both sides of the magnetic contactor).
- If the wire between the frequency converter and the motor is very long, particularly with low output frequency, the voltage drop may lead to a reduced torque output by the motor.
- Nothing other than the brake resistor may be connected between the terminal (+) and B. Do not short circuit!
- Electromagnetic interference: The inputs/outputs of frequency converters contain harmonic components, which may interfere with nearby communication devices (e.g. AM radio receiver). Therefore, an optional radio noise filter (only for the input side) or line noise filter may be installed to minimize interference.
- Do not attach power capacitor, surge suppressor or radio noise filter to the output side of frequency converters. This may cause frequency converter failure or damage the capacitor or suppressor. Immediately remove any of such device if it has been installed.
- Integral solid state short circuit protection does not provide branch circuit protection. Branch circuit protection must be provided in accordance with the National Electrical Code [USA] and any additional local codes.

- After connecting the power supply terminals, the motor and the control terminals, place the cover back before switching on the power. Take account of the following instructions:
  1. Ensure that the power supply can provide appropriate voltage and current. Ensure that the rated current range is within that of the frequency converter and power supply.
  2. It is recommended to use 4-core cables to connect the motor. Cables are connected to motor terminals PE-U-V-W.
  3. If shielded cables are used, the shield layer of the motor cable should be securely connected to ⏚ on the bottom right of the heat sink. The shielded cables for the control signals should be connected to ⏚ on control terminal block.

☞ It is recommended to use shielded cables in accordance with specified EMC classification.

5.6 Main Circuit Wiring Diagram

Name	1-phase	3-phase	Description
Power supply	L1 L2	L1 L2 L3	**Power supply** Ensure that the power supply meets the rated values in this manual.
Fuse			**Fuse** A frequency converter may take a high input current when being switched on. Please select an appropriate fuse.①
Electromagnetic contactor			**Electromagnetic contactor (MC)** Do not use an MC as **Run/Stop** switch frequently. Ensure not exceed the frequency of once/15 minutes.②
AC input reactor			**AC input choke** An AC input choke is recommended to improve power factors. The wiring length must be less than 10 m.
EMC filter			**EMC filter**
Frequency converter	N N		**Frequency converter** See the figure on the right side for connections of other accessories.
AC output choke			**AC output choke** When the connecting wire is longer than 50 m, an AC output choke is suggested to be added in order to avoid motor insulation destruction.
Motor	M 3~		**Motor**

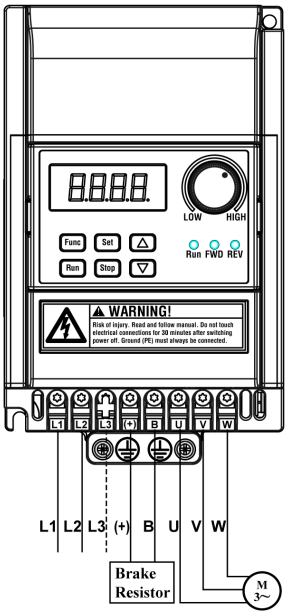

Caution:
For a 1-phase 200 V frequency converter, terminal L3 is covered in the factory. It is not allowed to remove the cover.

Fig.5-7: Main circuit wiring diagram

①: To select an appropriate fuse, please refer to fig. 5-12 "Fuse and cable dimensions" on page 35.

②: It will shorten the life time of relay contacts and DC bus capacitors, and may destroy the resistor for capacitor charging and current limitation.

5.7 Main Circuit Terminals

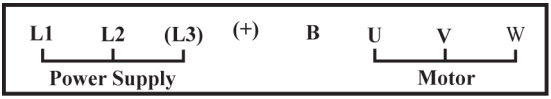

Fig.5-8: Main circuit terminals (1x200 VAC)

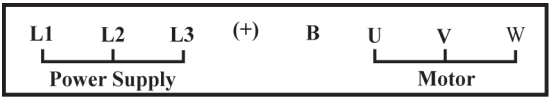

Fig.5-9: Main circuit terminals (3x400 VAC)

5.8 Main Circuit Terminals Description

Terminal	Description
1-phase 200 VAC class	
L1, L2	Mains power supply inputs
U, V, W	Frequency converter outputs (to be connected to the motor)
B	Reserved terminal for external brake resistor
(+)	DC positive bus output
⏚	Grounding and input PE
3-phase 400 VAC class	
L1, L2, L3	Mains power supply inputs
U, V, W	Frequency converter outputs (to be connected to the motor)
B	Reserved terminal for external brake resistor
(+)	DC positive bus output
⏚	Grounding and input PE

Fig.5-2: Main circuit terminals description

- **Do not** use terminal L3 for 1P 200 VAC class models!
- Input PE terminals: located at bottom left of the heat sink ⏚.
- Grounding terminals: located at bottom right of the heat sink ⏚.

5.9 Cable and Fuse Dimensions

5.9.1 Selection Standards

The power cable dimensions and the fuse dimensions are based on the VDE 0298 (part 4) and the standard for the European countries EN 60204-1.

The dimension for flexible wiring is according to VDE 0298 (part 4) and for fix wiring according to VDE 0298 (part 4) or IEC 60364-5 (operating temperature at the conductor 90 °C).

The cable and fuse dimensions for USA / Canada are based on UL508A.

☞ The manufacturer of the machine/installation is responsible for conformity with regional provisions and other standards that are relevant for the respective application and the place of installation. Also factors, such as installation methods, grounding, insulation and over-voltage protection must be taken into consideration.

National standards, such as NFPA in the USA, regional provisions, ground, operating temperature, operating cycles, over-voltage protection and system configuration can have a decisive impact on the dimensioning of the cables and therefore they must be given priority over the above factors.

☞ If, as a consequence of this, further requirement and cable designs arise that are not mentioned in this documentation, contact your Bosch Rexroth sales partner.

5.9.2 Recommendation on Cable Dimensioning

1. Depends on the power of a frequency converter.
2. In table column “Nominal Current of Fuse [A]”, read corresponding information for fuse.

☞
1. The cable dimensions for inputs and outputs are based on supply voltages of 1P 200 VAC / 3P 380 VAC.
2. For torque information, see the table below.

Power [kW]	Input side		Output side	Screw torque for power cable terminals [Nm / lb-in] (screw size)	PE	
	Nominal current of Fuse [A]	Cable size [mm² / AWG]	Cable size [mm² / AWG]		Cable size [mm² / AWG]	Torque [Nm / lb-in] (screw size)
1-phase 200 VAC class						
0.4	10	2.0 / 14	2.0 / 14	0.8 / 7 (M3)	6 / 8	0.8 / 7 (M3)
0.75	16	2.0 / 14	2.0 / 14	0.8 / 7 (M3)	6 / 8	0.8 / 7 (M3)
1.5	20	2.0 / 14	2.0 / 14	0.8 / 7 (M3)	6 / 8	0.8 / 7 (M3)
2.2	25	3.5 / 12	3.5 / 12	1.2 / 10 (M4)	6 / 8	1.2 / 10 (M4)
3-phase 400 VAC class						
0.4	6	2.0 / 14	2.0 / 14	0.8 / 7 (M3)	6 / 8	0.8 / 7 (M3)
0.75	10	2.0 / 14	2.0 / 14	0.8 / 7 (M3)	6 / 8	0.8 / 7 (M3)
1.5	10	2.0 / 14	2.0 / 14	0.8 / 7 (M3)	6 / 8	0.8 / 7 (M3)
2.2	16	2.0 / 14	2.0 / 14	1.2 / 10 (M4)	6 / 8	1.2 / 10 (M4)
4.0	20	2.0 / 14	2.0 / 14	1.2 / 10 (M4)	6 / 8	1.2 / 10 (M4)

Fig.5-3: Fuse and cable dimensions

5.9.3 Recommendation for Design of the Fuses

- **International except for USA/Canada:**
  Class gL-gG; 500 V, 690 V; design NH, D (DIAZED) or D0 (NEOZED).

- In the case of error (e.g. ground fault at connections L+, L-), fuses of characteristic **gL** (general-purpose fuse link for cables and lines) and **gG** (general-purpose fuse link for general installations) protect the **lines** in the frequency converter system.
- To **protect the semiconductors** in the input of supply units and frequency converters, you can use fuses of characteristic **gR**.

- USA/Canada: Class J; 600 V

5.10 Main Circuit Wiring Steps

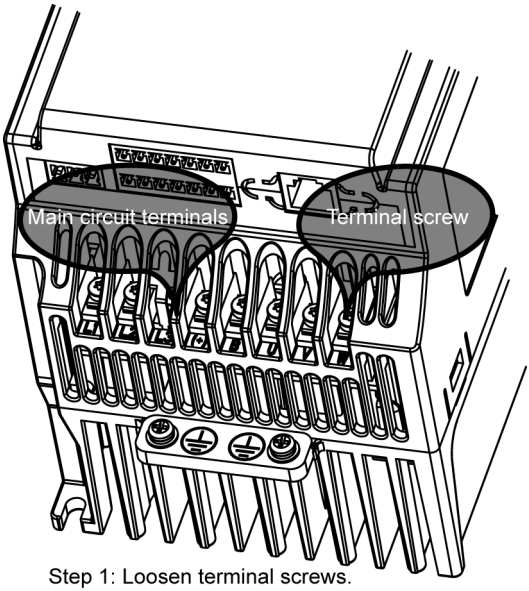

Step 1: Loosen terminal screws.
Step 2: Place cables into screw holes.
Step 3: Tighten terminal screws.

Fig.5-10: Main circuit wiring steps

5.11 Notes on Control Circuit Wiring

- Terminal GND is the common terminal for analog signals, and SC is the common terminal for digital signals. Do not ground these terminals. Shielded or twisted-pair cables should be used for control circuit terminals wiring and must be separated from the wiring of main circuit and high current circuits (including the control circuit of 200 V relay).
- Please strip the wire insulation for wiring of the control circuit, according to the dimensions given below. Too long stripping may cause short circuit of adjacent wires; too short stripping may lead to wires becoming loose.

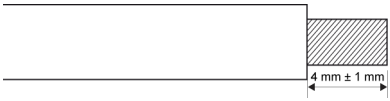

Fig.5-11: Wire stripping length

- Disconnection of cables or damage of screws may cause incorrect operation if screws are not fixed correctly.

5.12 Control Circuit Terminals

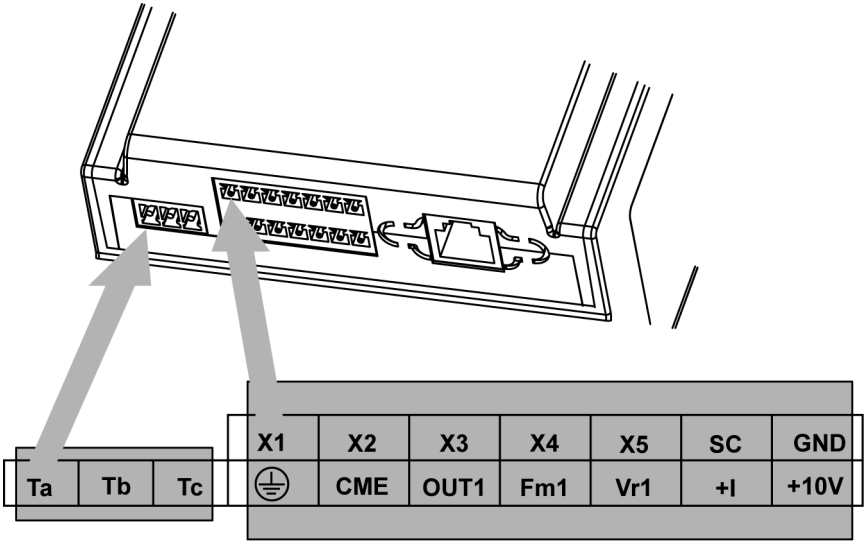

Fig.5-12: Control circuit terminals

☞ The sequence of the label and the terminals is as indicated by arrows in the above figure.

5.13 Control Circuit Terminals Description

Type	Terminal	Signal function	Description	Signal requirement
Digital inputs	X1 ~ X5	Multiple speed commands	Activated with “closed”	24 VDC 8 mA inputs via opto-electric couplers
	SC	Shared connection for digital signals	Isolated from GND	
Analog inputs	+10 V	Supply voltage for external frequency set-point value specified	Power supply for speed commands	+10 V (Max. current 30 mA)
	Vr1	Analog frequency commands	Analog voltage input	Input voltage range: 0 ~ 10 V Input resistance: 40 kΩ Resolution: 1/1000
	+I		Analog current input	Input current range: 4 ~ 20 mA Input resistance: 499 Ω Resolution: 1/800
	GND	Shared connection for analog signals	Isolated from SC	–
	Earth	Shielding terminal	–	–
Digital outputs	OUT1-CME	Open collector output 1	Programmable digital output with multiple functions, see parameter [E1.00]	Open collector outputs: DC 30 V, 50 mA
	Ta	Relay changeover contacts	Programmable relay output, see parameter [E1.02]	Rated capacity of contact transmitter: 250 VAC 3 A 30 VDC 3 A
	Tc			
	Tb	Relay shared contact		
Analog outputs	Fm1-GND	Analog multi-function output 1	Programmable analog output with multiple functions, see parameter [E1.30]	Output voltage: 0 ~ 10 V Max. output current: 5 mA

Fig.5-4: Control circuit terminals description

5.14 NPN / PNP Switch SW for the Digital Inputs

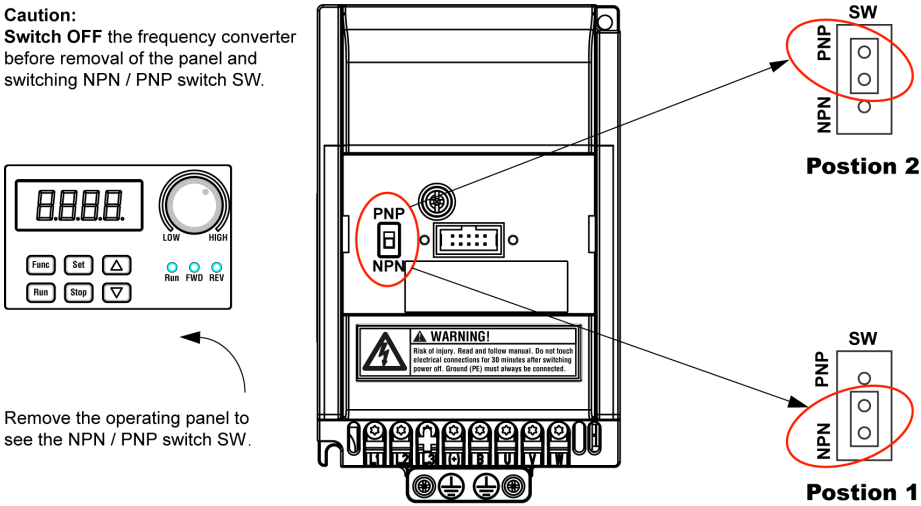

Fig.5-13: NPN / PNP Switch SW for the Digital Inputs

- The factory default setting is NPN.
- For disassembly and mounting of the operating panel, see chapter 14.4 "Operating Panel Removal and Mounting" on page 189.

5.15 NPN and PNP Modes

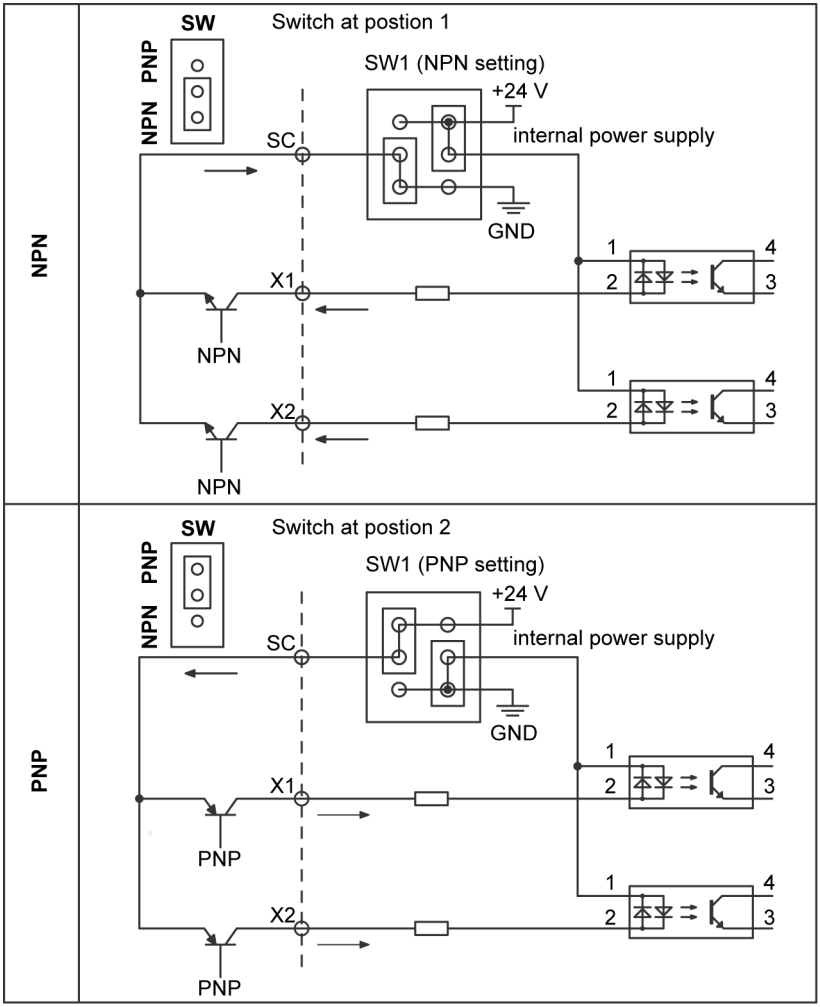

Fig.5-14: NPN and PNP modes

5.16 Analog Input Terminals (+10 V, Vr1, GND,+I)

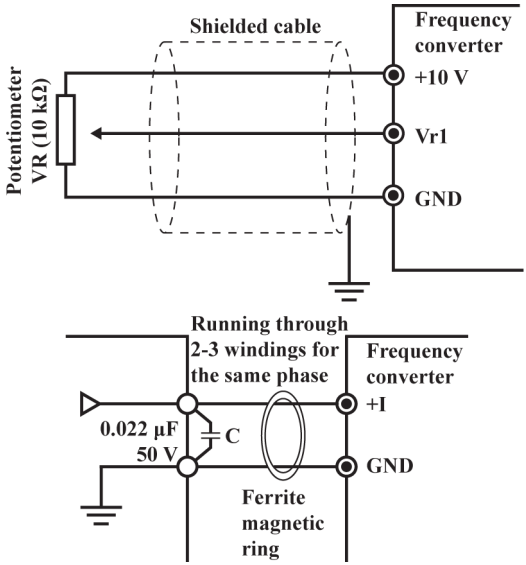

Fig.5-15: Analog Input Terminals (+10 V, Vr1, GND,+I)

- For connections of low level analog signals, which are easily affected by external interference, the wiring length should be as short as possible (less than 20 m). Shielded cables must be used.
- Incorrect operation may occur due to interference on the analog signal. In such cases, connect a capacitor and ferrite core at the output side of the analog signal, as shown above.

5.17 Recommendations on Control Circuit Wiring

0.2 ~ 1.5 mm^2 cables are recommended for wiring of the control circuit.

5.18 Control Circuit Wiring Steps

Step 1: Press the white button of the connector.

Step 2: Place the prepared control wire into the connection hole.

Step 3: Stop pressing of the white button.

Step 4: Repeat Step 1 to Step 3 to connect all the necessary wires

Step 5: Push the connector into the control terminals socket.

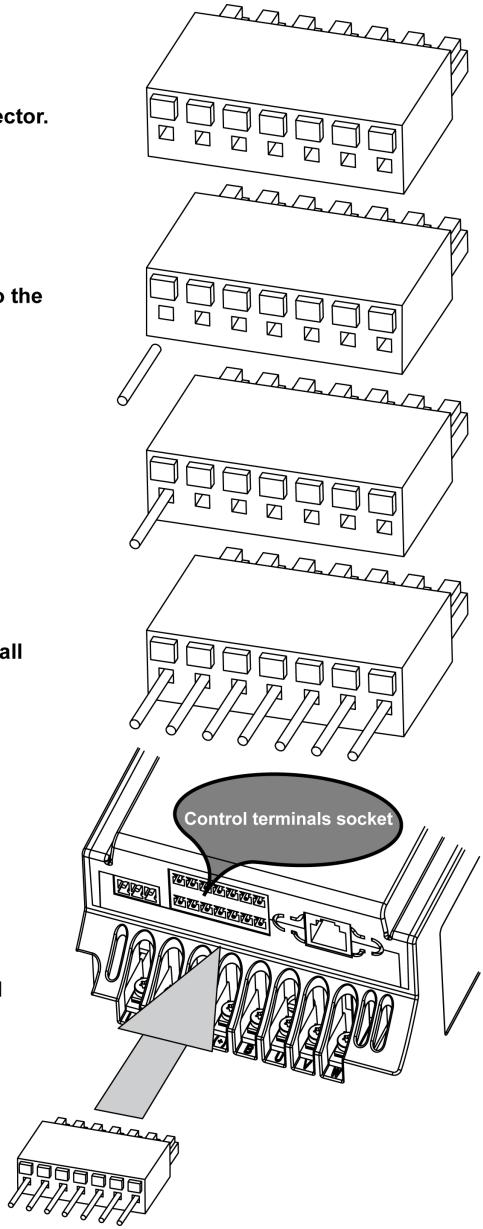

Fig.5-16: Control Circuit Wiring Steps

6 Operating Panel

6.1 Figure and Description

The operating panel is removable and composed of two areas: display and keys. The display shows mode settings and operation state of the frequency converter. The keys allow the user to program the frequency converter.

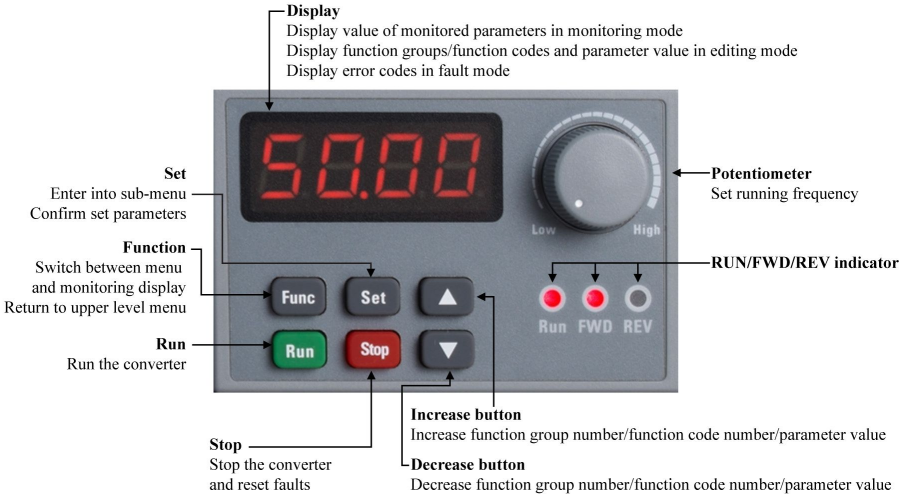

Fig.6-1: Operating panel

6.2 Seven-segment Display

Fig.6-2: Seven-segment display

Display has only 4 digits, but values with up to 5 digits may be displayed.

- To view the first 4 digits: press buttons **Func+▲**.
- To view the last 4 digits: press buttons **Func+▼**.

6.3 LED Indicator

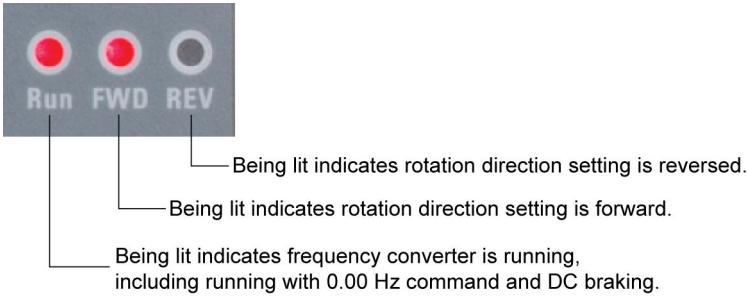

Fig.6-3: LED indication description

☞ The LED indicator **Run** also blinks during dead zone time of forward and reverse rotation, period of automatic error reset and waiting time for re-starting after power fault.

6.4 Menu Structure

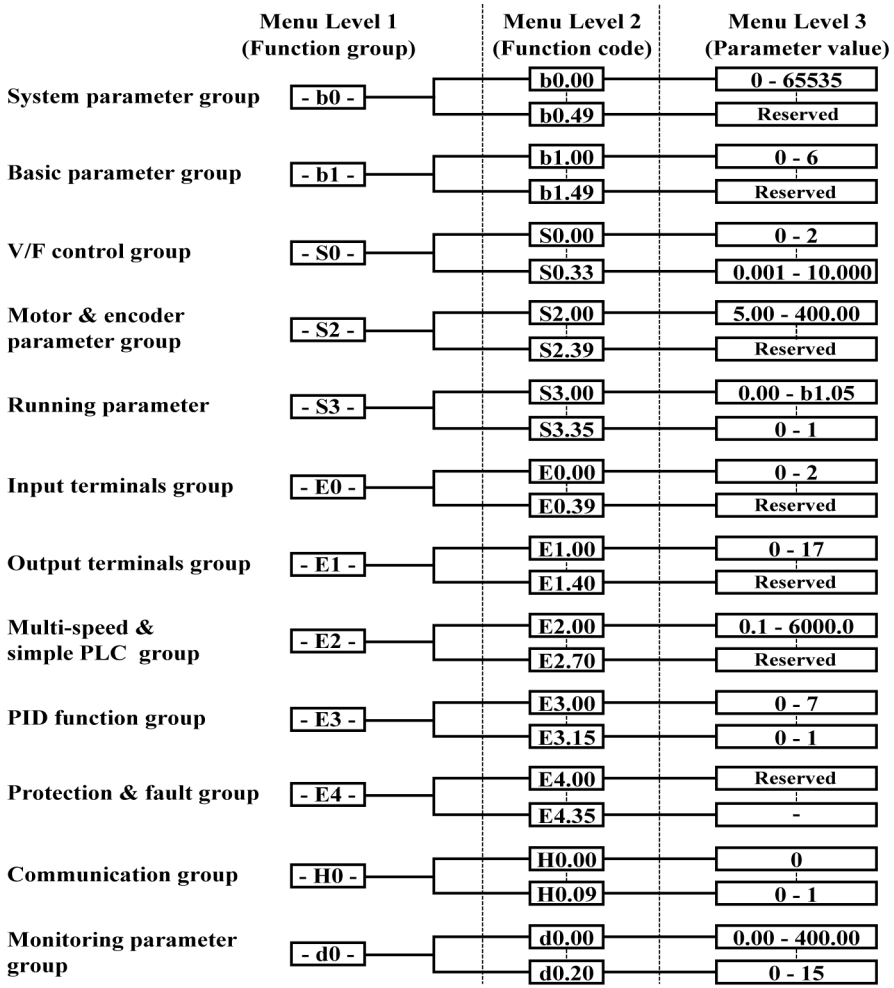

Fig.6-4: Menu structure

- The digital operating panel can be used to toggle between menu options and set parameters with buttons **Func**, **Set**, ▲ and ▼.
- The monitoring display mode will be activated if there is no operation for more than 60 seconds.

6.5 Example of Operating Panel Operation

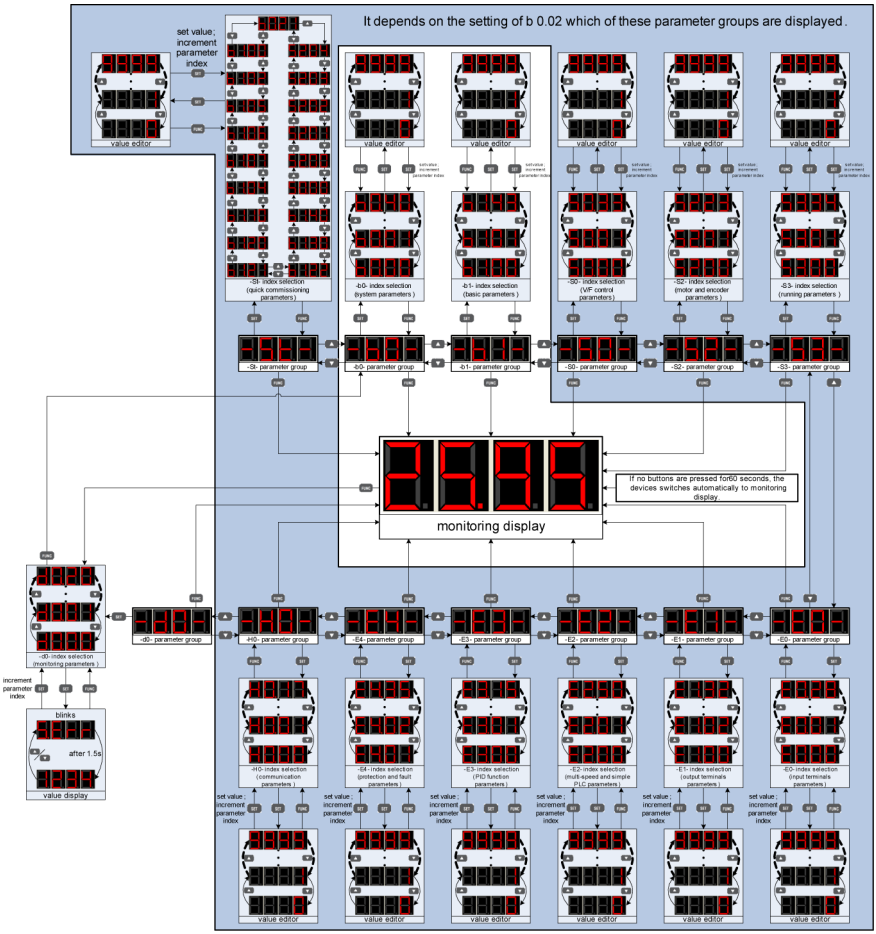

Fig.6-5: Example of operating panel operation

7 Commissioning

7.1 Checking and Preparation before Commissioning

⚠ WARNING

Ensure the plastic enclosure is in place before the device is powered on. Wait for at least 10 minutes after powering off to allow the DC capacitor being discharged, and do not remove the upper cover during this period.

① Check if the wiring is correct. Particularly, ensure that the output terminals U, V and W of the frequency converter are not connected to the power supply and that the ground terminal is well connected.

② Ensure that there are no short circuits between terminals, live terminals or short circuit to ground.

③ Ensure that terminal connections, connectors and screws are secure.

④ Ensure that the motor is not connected to any load.

⑤ Check that all switches are off before powering on, to ensure that the frequency converter will not be started and no unexpected action occurs.

⑥ It is suggested to connect U, V, W of the frequency converter to corresponding U, V, W of the motor.

7.2 Commissioning Process

Step	Operation	Description
1	Rotate the potentiometer counterclockwise (leftwards) to the greatest extent	The initial frequency value is 0.00
2	Press **Run** key	Enter the command for running, with 0.00 displayed
3	Rotate the potentiometer clockwise (rightwards) slowly and the displayed value starts to change, until 5.00 is displayed	The motor starts to run
4	Observe: • Whether the motor runs in the correct direction • Whether the motor runs smoothly • Whether there is any abnormal noise or problem	Observe the running, and immediately stop the motor by shutting off the power if any abnormality occurs. Restart commissioning only after the fault causes have been removed
5	Rotate the potentiometer clockwise (rightwards)	The motor accelerates
6	Rotate the potentiometer counterclockwise (leftwards)	The motor decelerates
7	Press **Stop** key	When commissioning is complete, the command for stopping is activated. The frequency converter is ready for normal operation.

Fig.7-1: Commissioning process

- EFC 3600 has no internal contactor, and will be energized once the power supply is connected. When the **Run** key is pressed down (or the control through terminals is selected), the frequency converter will give output.
- By factory default, EFC 3600 is set as:
  - The frequency converter is started or stopped via the operating panel control.
  - The output frequency is set by the potentiometer on the operating panel.
- After powering on, please confirm:
  - The set frequency is displayed (no error display)
  - The monitoring parameter is consistent with the actual situation.
- The frequency converter initially displays output frequency after being energized. You may change it to another parameter as instructed in [b0.30] and [b0.31]. The factory defaults are based on standard applications with standard motors.

7.3 EFC 3600 Basic Parameter Fast Settings

Using the operating panel to set the necessary parameters based on the application loads and specifications allows the frequency converter to start rapidly. A basic generic parameter fast setting table is given below.

- Set [b0.02]=4 with **Func** and **Set** keys to show "-St-" group.
- For parameter attributes, see chapter 17.2.1 "Description of Attribute Symbols in Parameter Tables" on page 195.

Function code	Name	Setting range	Min. unit	Factory default	Attributes
[b0.21]	Carrier frequency	1 ~ 15 kHz	1 kHz	4 kHz	Run/Stop
[b1.00]	First frequency setting source	0 ~ 6	1	0	Stop
[b1.02]	First Run command source	0 ~ 2	1	0	Stop
[b1.05]	Max. frequency	50.00 ~ 400.00 Hz	0.01 Hz	50.00 Hz	Stop
[b1.06]	Upper frequency	[b1.07] ~ [b1.05]	0.01 Hz	50.00 Hz	Run/Stop
[b1.07]	Lowest frequency	0.00 ~ [b1.06]	0.01 Hz	0.00 Hz	Run/Stop
[b1.04]	Digital set frequency	[b1.07] ~ [b1.06]	0.01 Hz	50.00 Hz	Run/Stop
[b1.10]	Direction control	0 ~ 3	1	0	Stop
[b1.20]	Acceleration time 1	0.1 ~ 6000.0s	0.1s	5.0s	Run/Stop
[b1.21]	Deceleration time 1	0.1 ~ 6000.0s	0.1s	5.0s	Run/Stop
[b1.22]	Acceleration/deceleration curve mode	0 ~ 1	1	0	Stop
[b1.30]	Starting mode	0 ~ 2	1	0	Stop
[b1.40]	Stopping mode	0 ~ 2	1	0	Stop
[S0.00]	V/F curve mode	0 ~ 2	1	0	Stop
[S2.00]	Rated motor frequency	5.00 ~ 400.00 Hz	0.01 Hz	50.00 Hz	Stop
[S2.01]	Rated motor rotation speed	1 ~ 30000 rpm	1 rpm	Depending on model	Stop
[S2.02]	Rated motor power	0.1 ~ 1000.0 kW	0.1 kW	Depending on model	Stop

Function code	Name	Setting range	Min. unit	Factory default	Attributes
[S2.03]	Rated motor voltage	0 ~ 480 V	1 V	Depending on model	Stop
[S2.04]	Rated motor current	0.1 ~ 1000.0 A	0.1 A	Depending on model	Stop

Fig.7-2: Basic parameter fast setting

7.4 Restore Parameters to Factory Defaults

If the frequency converter fails to run the motor due to incorrect parameter settings, a simple solution is to initialize the parameters to factory defaults. Setting [b0.05]=1 will start initialization.

Please be sure that the parameter settings match with the motor and the field applications after factory defaults restore. Adjust the parameter settings after factory defaults restore if necessary.

Operating frequency	Set by the potentiometer ([b1.00])
Acc./Dec. time	Linear, Acc. for 5s / Dec. for 5s ([b1.20], [b1.21])
Protection mode in case of motor overload and overheat	Motor rated current [S2.04], thermal motor time constant [S2.23], low speed derating frequency [E4.04], and zero speed load [E4.05]
Panel operation	**Run**, **Stop** buttons as commands, potentiometer as frequency setting source
V/F curve mode	linear

Fig.7-3: Factory defaults

7.5 Solutions for Simple Faults during Commissioning

Simple faults	Solutions
Over current (OC-1 or OC-2) occurs during acceleration	Increase the acceleration time
Over voltage (OE-3) occurs during deceleration	Increase the deceleration time
Over current (SC, OC-1 or OC-2) occurs immediately after pressing the **Run** key	Incorrect wiring. Check if U, V, W outputs of the main circuit are shorted or grounded
The motor runs in the direction opposite to expected	Change the sequence of any two phases of U, V and W
The motor vibrates and runs in uncertain directions after each starting	One phase of U, V and W is disconnected (output phase loss)

Fig.7-4: Solutions for simple faults during commissioning

8 Parameter Settings

8.1 Group b0: System Parameters

b0.00	User password
Setting range	0 ~ 65535
Minimum unit	1
Factory default	0

- **Activate the user password protection**: the default value of the password is 0 (inactive), enter a new number between 1 and 65535 to activate the user password protection.
- **Modify the password**: enter the correct user password and then set a new number between 1 and 65535 to modify the user password.
- **Delete password**: enter the correct user password and set [b0.00]=0 to deactivate the password.

- Once a user password is set, users may only read but not modify nor copy parameters if an incorrect password is entered.
- Please contact the manufacture if you forget the set password.
- User password protection will not affect frequency modification with ▲/▼ keys in RUN mode. It means that the frequency may still be saved according to the selected saving mode when the frequency setting source is via digital setting. See descriptions in parameter [b1.01].

b0.01	Manufacturer password
Setting range	0 ~ 65535
Minimum unit	1
Factory default	0

Manufacturer password is only available for service.

b0.02	Access authority setting
Setting range	0 ~ 4
Minimum unit	1
Factory default	0

Used to define the parameter access authority. Visible parameter groups differ in the display when the settings of this parameter are different.

- 0: Basic parameters. In this mode, only parameters in group b (b0 and b1) are visible.

Parameter Settings

- 1: Standard parameters. In this mode, parameters in group b and S (S0, S2 and S3) are visible.
- 2: Extended parameters. In this mode, parameters in group b, S and E (E0, E1, E2, E3 and E4) are visible.
- 3: Advanced parameters. In this mode, parameters in group b, S, E and H (H0) are visible.
- 4: Start-up mode. The parameters in this mode are not additional parameters, but only quick links to the respective parameters. See the table below for details:

Function code	Name
[b0.21]	Carrier frequency
[b1.00]	First frequency setting source
[b1.02]	First RUN command source
[b1.04]	Digital set frequency
[b1.05]	Max. frequency
[b1.06]	Upper frequency
[b1.07]	Lowest frequency
[b1.10]	Direction control
[b1.20]	Acceleration time 1
[b1.21]	Deceleration time 1
[b1.22]	Acceleration / deceleration curve mode
[b1.30]	Starting mode
[b1.40]	Stopping mode
[S0.00]	V/F curve mode
[S2.00]	Rated motor frequency
[S2.01]	Rated motor rotation speed
[S2.02]	Rated motor power
[S2.03]	Rated motor voltage
[S2.04]	Rated motor current

Fig.8-1: Parameters in start-up mode

- Monitoring parameter group is always visible.
- User password protection will not affect the modification of [b0.02].

b0.05	Parameter initialization
Setting range	0 ~ 2
Minimum unit	1
Factory default	0

Used to restore parameters to factory defaults. Recent 3 faults and the last fault related variables are recorded for further fault review. They can be deleted if necessary.

- 0: No action
- 1: Restore to factory defaults.

  All parameters except [S2.00] ~ [S2.15] (motor parameters), [E4.20]~ [E4.22], [E4.30] ~ [E4.35] (error messages), [b0.40] (system running time) are restored to factory defaults.
- 2: Remove error records

  Clearing parameters [E4.20] ~ [E4.22], [E4.30] ~ [E4.35].

☞ After the command is executed completely, parameter [b0.05] will be set to zero automatically.

b0.06	Parameter replication
Setting range	0 ~ 2
Minimum unit	1
Factory default	0

- 0: No action
- 1: Read parameter

  All except read-only parameters* are copied from the frequency converter to the operating panel.
- 2: Write parameter

  All except read-only parameters* are copied from the operating panel to the frequency converter.

☞
- Read-only parameters*: all monitoring parameters [d0.00] ~ [d0.20]; all error memory parameters [E4.20] ~ [E4.22] and [E4.30] ~ [E4.35].
- After the command is executed completely, parameter [b0.06] will be set to zero automatically and "b0.20" will be displayed.
- All operations are invalid during parameter replication.

Parameter Settings

b0.20	Frequency converter rated voltage setting
Setting range	200 V class: 200 ~ 240 V 400 V class: 380 ~ 480 V
Minimum unit	1 V
Factory default	200 V class: 220 V 400 V class: 380 V

Used for analog output function selection "terminal output voltage". Analog output voltage 10 V corresponds to 1.2 times of [b0.20], for example:

[b0.20]=220 V, the terminal output voltage 0 ~ 264 V corresponds to 0 / 2 ~ 10 V, see descriptions in parameter [E1.30] ~ [E1.32].

b0.21	Carrier frequency
Setting range	1 ~ 15 kHz
Minimum unit	1 kHz
Factory default	4 kHz

- A higher PWM frequency may reduce the motor noise, but increase the ground current leakage and interferences caused by the frequency converter. Also the power loss and temperature will be increased.
- A lower PWM frequency will reduce the power loss and temperature of frequency converter.

For the temperature, voltage and current derating figures related to PWM frequency, please refer to chapter 10.3 "Derating of Electrical Data" on page 145.

☞ To obtain the best performance of the output frequency, the carrier frequency needs to be set as below:

Set [b0.21] ≥10 ("Max. frequency" [b1.05]).

b0.22	Automatic adjustment of carrier frequency
Setting range	0: OFF; 1: ON
Minimum unit	1
Factory default	0

The frequency converter is able to adjust the PWM frequency automatically based on its own temperature when this function is activated.

b0.30	Running monitoring display
Setting range	0 ~ 20
Minimum unit	1
Factory default	0
b0.31	**Stop monitoring display**

Setting range	0 ~ 20
Minimum unit	1
Factory default	2

- 0: Output frequency
- 1: Output rotation speed
- 2: Set frequency
- 3: Set rotation speed
- 4: Output voltage
- 5: Output current
- 6: Output power
- 7: DC bus voltage
- 8: Analog input AIV
- 9: Analog input AIC
- 10: User-defined set frequency
- 11: User-defined output frequency
- 12: Digital input status
- 13: Digital output status
- 14: PID target engineering value
- 15: PID feedback engineering value
- 16: Module temperature
- 17: Firmware version 1
- 18: Firmware version 2
- 19: Firmware version 3
- 20: Actual carrier frequency

b0.32	User-defined proportion factor for velocity
Setting range	0.01 ~ 100.0
Minimum unit	0.01
Factory default	1.00
b0.33	**PID reference / feedback coefficient**
Setting range	0.01 ~ 100.0
Minimum unit	0.01
Factory default	1.00

Used for monitoring function. They only affect the displayed value of monitoring parameters regarding velocity or PID control parameters.

User-defined set velocity

Parameter Settings

[d0.10]=[d0.02] x [b0.32]

With:

[d0.10]: User-defined set velocity

[d0.02]: Set frequency

[b0.32]: User-defined proportion factor for velocity

User-defined output velocity

[d0.11]=[d0.00] x [b0.32]

With:

[d0.11]: User-defined output velocity

[d0.00]: Output frequency

[b0.32]: User-defined proportion factor for velocity

Users may convert the frequency to any other form they feel easy to understand via parameter [b0.32].

PID reference engineering value

[d0.14]=PID reference x [b0.33]

With:

[d0.14]: PID reference engineering value

[b0.33]: PID reference / feedback coefficient

PID feedback engineering value

[d0.15]=PID feedback x [b0.33]

With:

[d0.15]: PID feedback engineering value

[b0.33]: PID reference / feedback coefficient

Users may convert the PID engineering value to any other form they feel easy to understand via parameter [b0.33].

☞ In case the value of a monitoring parameter is too big to fit into the 4-digit display:

- If the display value is between 1000.0 and 9999.9, 1000 ~ 9999 is displayed without the display of the decimal point.
- If the display value is not less than 10000, the higher 4 digits are displayed and the rightmost decimal point is lit to indicate that one more digit is hidden to the right, for example: "12340" is displayed as "1234.".

b0.40	Cumulative running time
Setting range	0 ~ 65535 hours
Minimum unit	1 hour
Factory default	0 hour

Used to display the switching-on time of a frequency converter. When the cumulative running time exceeds 65535 hours, the counter remains at 65535.

8.2 Group b1: Basic Parameters

b1.00	The first frequency setting source
Setting range	0 ~ 6
Minimum unit	1
Factory default	0

- 0: Given by panel potentiometer.

  Set the frequency by adjusting the operating panel's potentiometer
- 1: Given by panel digital setting.

  Use the value of parameter [b1.04] as the set frequency. Use ▼ and ▲ keys to change the output frequency value when the frequency converter is running. See descriptions for [b1.01].
- 2: Given by external analog AIV

  Set the frequency by external analog voltage input. The input resistance is 40 kΩ. Please also set parameters [E0.10] ~ [E0.28].
- 3: Given by external analog AIC

  Set the frequency by external analog current input. The input resistance is 499 Ω. Please also set parameters [E0.10] ~ [E0.28].
- 4: Set by external UP / DOWN terminals

  In this mode, the output frequency can be adjusted easily with the UP, DOWN and RESET terminals. For details, please see parameters [S3.32] and [S3.33].
- 5: Given via communication

  Set output frequency by communication with an external computer or PLC. For relevant settings, please refer to parameters in group H.
- 6: Given by multi-speed.
  - Set [b1.00]=6
  - When RUN / STOP command source is from panel, any 3 of parameters [E0.01] ~ [E0.05] need to be set as: one to 1 "Multi-speed control terminal 1", one to 2 "Multi-speed control terminal 2" and one to 3 "Multi-speed control terminal 3". Acceleration / deceleration time and rotation direction can be defined by multi-speed / PLC configuration (See parameters [E2.35] ~ [E2.50]).

Parameter Settings

– When RUN / STOP command source is from external terminals (2-wire / 3-wire control mode), the direction command source comes from 2-wire / 3-wire running control ([E0.00]). Other spare external terminals can be used for multi-frequency selection. Acceleration / deceleration time can be defined by multi-speed / PLC configuration (see parameters [E2.35] ~ [E2.50]).

b1.01	Digital set frequency saving
Setting range	0 ~ 3
Minimum unit	1
Factory default	0

With this parameter, the digital settings via ▲/▼ may be automatically saved at power off or stop.

- 0: Not saved when powered off or stopped
- 1: Not saved when powered off; saved when stopped
- 2: Saved when powered off; not saved when stopped
- 3: Saved when powered off or stopped

☞ Value changes set by [b1.04] are always retained.

b1.02	The first RUN command source
Setting range	0 ~ 2
Minimum unit	1
Factory default	0

- 0: Inputting commands via panel

  Using keys **Run** and **Stop** on the panel to run and stop the frequency converter.
- 1: Inputting commands via external terminals

  Using external terminals to control run, stop, forward and reverse. For details, please refer to the description in group E0.
- 2: Inputting commands via communication

  Running, stopping, forwarding or reversing of the frequency converter are controlled via communication. See chapter 13 "Communication Protocols" on page 172.

☞ If [b1.02]=1 or 2, the **Stop** key on the operating panel can be enabled with [S3.35].

b1.03	Reserved
b1.04	**Digital set frequency**
Setting range	0.00 ~ [b1.06]

Minimum unit	0.01 Hz
Factory default	50.00 Hz

When "The first frequency setting source" [b1.00]=1, the value of [b1.04] is the set frequency.

b1.05	Max. frequency
Setting range	50.00 ~ 400.00 Hz
Minimum unit	0.01 Hz
Factory default	50.00 Hz
b1.06	**Upper frequency**
Setting range	[b1.07] ~ [b1.05]
Minimum unit	0.01 Hz
Factory default	50.00 Hz
b1.07	**Lower frequency**
Setting range	0.00 ~ [b1.06]
Minimum unit	0.01 Hz
Factory default	0.00 Hz

- [b1.05] is the maximum allowed output frequency of the frequency converter.
- The "Upper frequency" [b1.06] and "Lower frequency" [b1.07] represent the maximum and minimum allowed output frequency set according to the requirements in applications.

b1.08	Lower frequency mode
Setting range	0 ~ 1
Minimum unit	1
Factory default	0
b1.09	**Hysteresis frequency width**
Setting range	0.00 ~ [b1.07]
Minimum unit	0.01
Factory default	0.00

Two running modes are available when the lowest frequency is reached:

- [b1.08]=0: Running with 0 Hz

  When the lower frequency is reached, the frequency converter is running with 0 Hz. To avoid the tingle at lower frequency, a hysteresis frequency width is needed.

- [b1.08]=1: Run with lower frequency

  If the lower frequency is reached, the frequency converter is running with the lower frequency. If command frequency is higher than [b1.07]+[b1.09] again, the output

frequency will accelerate from [b1.07] to the command value according to the acceleration time.

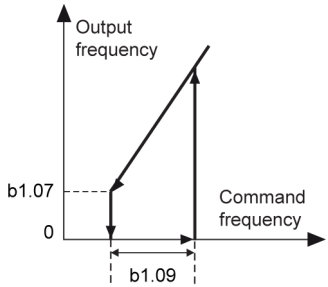

Fig.8-1: [b1.08]=0

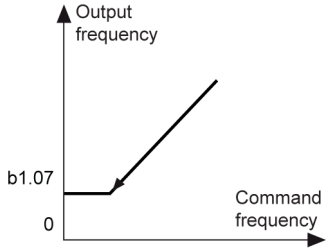

Fig.8-2: [b1.08]=1

b1.10	Direction control
Setting range	0 ~ 3
Minimum unit	1
Factory default	0

Used for general settings of direction control. It accepts all the direction control source (panel, communication and external terminal).

- 0: Both directions
- 1: Forward only. When reverse rotation command is active, the frequency converter will stop immediately and the error shows up.
- 2: Reverse only. When forward rotation command is active, the frequency converter will stop immediately and the error shows up.
- 3: Inverse default direction.

An adjustable dead zone time between forward and reverse can be set, please refer to [S3.30].

b1.11	Operating panel controls direction
Setting range	0 ~ 1
Minimum unit	1
Factory default	0

This parameter is only applicable for operations via the operating panel.

- 0: Forward rotation
- 1: Reverse rotation

The relationship between [b1.10] and [b1.11] is:

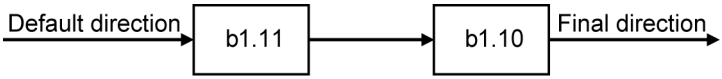

Fig.8-3: Relationship between [b1.10] and [b1.11]

Direction control [b1.10]		Default direction [b1.11]	Final direction
0	Both directions	Forward	Forward
		Reverse	Reverse
1	Forward only	Forward	Forward
		Reverse	STOP with error
2	Reverse only	Forward	STOP with error
		Reverse	Reverse
3	Inverse default direction	Forward	Reverse
		Reverse	Forward

☞ For "STOP with error", please see chapter 9.5 "Diagnosis on Errors" on page 128.

Normally, each RUN / STOP command source has its own direction command source. The generated direction is further controlled by internal direction control ([b1.10]).

Frequency source	RUN / STOP command source	Direction command source
Multi-speed	Operating panel	Defined by multi-speed / PLC configuration
	2-wire / 3-wire running control [E0.00]	2-wire / 3-wire running control [E0.00]
	Communication	Communication

Parameter Settings

Frequency source	RUN / STOP command source	Direction command source
Other setting sources in [b1.00] and [b1.16]	Panel	Defined by [b1.11]
	2-wire / 3-wire running control [E0.00]	2-wire / 3-wire running control [E0.00]
	Communication	Communication

b1.12~b1.14	Reserved
b1.15	**Combination frequency command source**
Setting range	0 ~ 2
Minimum unit	1
Factory default	0

- 0: no combination
- 1: first frequency setting + second frequency setting
- 2: first frequency setting - second frequency setting

EFC 3600 has two frequency setting sources: the first frequency setting source [b1.00] and the second frequency setting source [b1.16]. It is allowed to use any of the frequency command sources or the combination of them.

- When the combination of two sources is active:

  The reference and calculation of each part of the combination follows the rules and definitions when it is used as a single command source input. Each part of the combination has the full frequency range, which means that the combined frequency may theoretically become smaller than 0.00 Hz (when [b1.15] is set to 2]) or larger than [b1.06] (when [b1.15] is set to 1). So the combined frequency is limited to the range of 0.00 Hz ~ [b1.06].

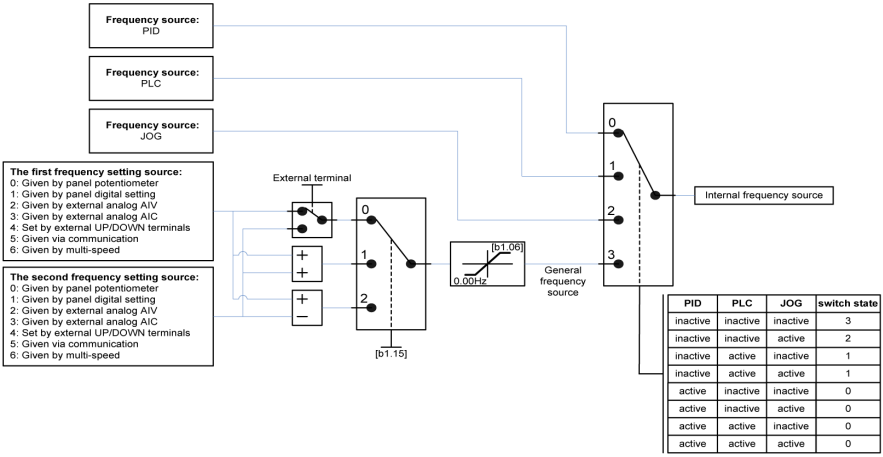

PID	PLC	JOG	switch state
inactive	inactive	inactive	3
inactive	inactive	active	2
inactive	active	inactive	1
inactive	active	active	1
active	inactive	inactive	0
active	inactive	active	0
active	active	inactive	0
active	active	active	0

Fig.8-4: Priority of frequency source

- When the combination of two resources is inactive:

  The two frequency resources can be switched via external terminal ([E0.01] ~ [E0.05]=18), for more details, please see "Multi-function digital input terminals".

  – When the combination is disabled and switching terminal is inactive, frequency command value is given by the first frequency setting source.

  – When the combination is disabled and switching terminal is active, frequency command value is given by the second frequency setting source.

b1.16	Second frequency setting source
Setting range	0 ~ 6
Minimum unit	1
Factory default	2

- 0: Given by panel potentiometer
- 1: Given by panel digital setting
- 2: Given by external analog AIV
- 3: Given by external analog AIC
- 4: Set by external UP / DOWN terminals
- 5: Given via communication
- 6: Given by multi-speed

This parameter is similar to [b1.00], please see descriptions in [b1.00].

Parameter Settings

b1.17	The second RUN command source
Setting range	0 ~ 2
Minimum unit	1
Factory default	0

- 0: Inputting commands with operating panel
- 1: Inputting commands via external terminals
- 2: Inputting commands via communication

b1.20	Acceleration time 1
Setting range	0.1 ~ 6000.0s
Minimum unit	0.1s
Factory default	5.0s
b1.21	**Deceleration time 1**
Setting range	0.1 ~ 6000.0s
Minimum unit	0.1s
Factory default	5.0s

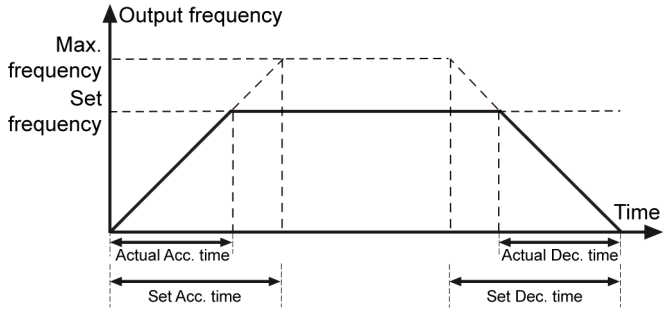

Fig.8-5: Acc. / Dec. time

For EFC 3600, acceleration / deceleration time is defined as the time from zero to the Max. frequency and from the Max. frequency to zero. 4 groups of acceleration / deceleration time are available, which can be selected via external terminals. For related settings, please see [E0.01] ~ [E0.05] and [E2.00] ~ [E2.05].

☞ Jog function has its own acceleration and deceleration time.

b1.22	Acceleration / deceleration curve mode
Setting range	0 ~ 1
Minimum unit	1

Factory default	0
b1.23	**S curve starting phase proportion**
Setting range	0.0 % ~ 40.0 %
Minimum unit	0.1 %
Factory default	20.0 %
b1.24	**S curve stopping phase proportion**
Setting range	0.0 % ~ 40.0 %
Minimum unit	0.1 %
Factory default	20.0 %

Used to set the acceleration / deceleration mode of the frequency converter to linear curve or S-curve in start, stop, forward / reverse, acceleration / deceleration processes.

- [b1.22]=0: Linear mode

  The output frequency is increased or decreased in linear as shown in figure below.

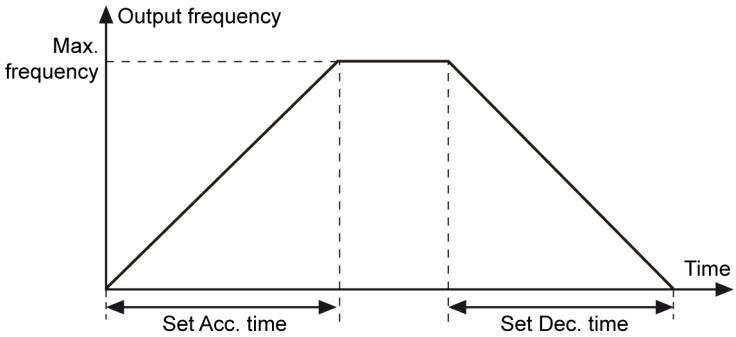

Fig.8-6: Linear mode

- [b1.22]=1: S-curve

  The output frequency is increased or decreased in an S-curve (the S-curve mode is used to achieve smooth start or stop) as shown in figure below.

Parameter Settings

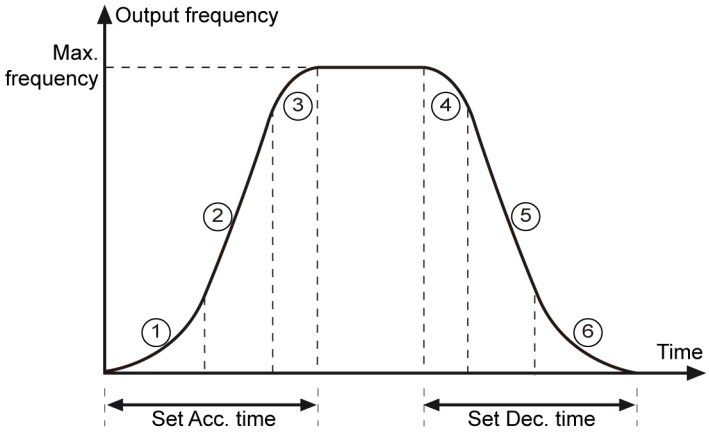

Fig.8-7: S-curve

- Stage ① is defined by [b1.23] with percent of acceleration time.
- Stage ④ is defined by [b1.23] with percent of deceleration time.
- Stage ③ is defined by [b1.24] with percent of acceleration time.
- Stage ⑥ is defined by [b1.24] with percent of deceleration time.

b1.25 ~ b1.29	**Reserved**
b1.30	**Starting mode**
Setting range	0 ~ 2
Minimum unit	1
Factory default	0
b1.31	**Starting frequency**
Setting range	0.00 ~ 50.00 Hz
Minimum unit	0.01 Hz
Factory default	0.05 Hz
b1.32	**Starting frequency holding time**
Setting range	0.0 ~ 20.0s
Minimum unit	0.1s
Factory default	0.1s
b1.33	**Starting DC braking time**
Setting range	0.0 ~ 20.0s (0.0 represents no action of starting DC braking)
Minimum unit	0.1s

Factory default	0.0s
b1.34	**Starting DC braking current**
Setting range	0.0 % ~ 150.0 % (Rated frequency converter current)
Minimum unit	0.1 %
Factory default	0.0 %

- [b1.30]=0: Start directly

  The frequency converter runs at "Starting frequency" [b1.31], for "Starting frequency holding time" [b1.32], and accelerates to set frequency with defined acceleration time. This mode is suitable for circumstances with high static friction torque and low load inertia.

☞ "Starting frequency holding time" [b1.32] needs to be set as a non-zero value when the motor needs to be started with certain starting frequency.

- [b1.30]=1: Braking before start
  - "Starting DC braking time" [b1.33]≠0s, DC braking is executed before accelerating to "Starting frequency" [b1.31].

  This mode is suitable for circumstances where the load may encounter forward / reverse rotation when the frequency converter is in stop mode.

- [b1.30]=2: Start with speed capture

  The frequency converter firstly identifies the rotation speed and direction of the motor and then starts with the current frequency of the motor to realize smooth starting without shock to the rotating motor. This mode is suitable for restarting after transient power fault in the case of a large inertia load.

☞ When the frequency converter is starting and accelerating, if the set frequency is lower than the "Starting frequency" [b1.31], the frequency converter firstly starts at the starting frequency and runs for "Starting frequency holding time" [b1.32], and then decelerates to the set frequency.

The actual starting DC braking current is calculated as below:

- If the x % of rated frequency converter current is lower than the rated motor current, then the actual starting DC braking current is x % of rated frequency converter current.
- If the x % of rated frequency converter current is higher than the rated motor current, then the actual starting DC braking current is x % of rated motor current.

Example: For a frequency converter of 0.75 kW / 200 V, the rated current is 3.9 A, the motor rated current is 3.45 A, when [b1.34] input is 100%, this parameter will activate the limitation function as the above described rule.

Parameter Settings

b1.35~b1.39	Reserved
b1.40	**Stopping mode**
Setting range	0 ~ 2
Minimum unit	1
Factory default	0

- 0: Deceleration to stop

  The frequency converter decelerates to stop according to the defined deceleration time.

☞
- If a fault happens due to too fast deceleration, extend the deceleration time or calculate if additional brake choppers / resistors are required.
- If the frequency is lower than the "Stopping DC braking initial frequency" [b1.41] and "DC braking time" [b1.42]≠0, DC braking is activated. The DC braking current is decided by [b1.43].
- DC braking is suitable for circumstances where regular deceleration to stop or quick stopping is required. The larger DC braking current, the larger braking force. However, the withstanding capability of the motor has to be taken into account.

- 1: Freewheeling to stop

  Once the stopping command is activated, the frequency converter stops output and the motor mechanically freewheels to stop.

- 2: Freewheeling in STOP-command, decelerating when direction changes

  This function also allows the frequency converter freewheeling to stop if STOP-command is active and decelerating to stop according to stopping mode (deceleration time and stopping DC braking if necessary) when direction change command is active during running.

☞ The digital input “freewheeling to stop” is an additional source for the STOP command. When the digital input is active, the frequency converter will be disabled immediately and freewheel to stop, no matter its previous state. The frequency converter will only return to the running state when a run command is active and then the digital input goes inactive. Please refer to [E0.01] ~ [E0.05] for more details.

b1.41	Stopping DC braking initial frequency
Setting range	0.00 ~ 50.00 Hz
Minimum unit	0.01 Hz
Factory default	0.00 Hz
b1.42	**Stopping DC braking time**
Setting range	0.0 ~ 20.0s (0.0 represents no action of stopping DC braking)

Minimum unit	0.1s
Factory default	0.0s
b1.43	**Stopping DC braking current**
Setting range	0.0 % ~ 150.0 % (Rated frequency converter current)
Minimum unit	0.1 %
Factory default	0.0 %

There are two ways to carry out the stopping DC braking: parameter setting and digital input. DC-braking will only be activated, when

- a stop command is active, and
- [b1.40]=0, and
- output frequency≤[b1.41], and
- digital input “Stopping DC-braking enabled” is active, or [b1.42]>0.

☞ When [b1.42]>0 and digital input “Stopping DC-braking enabled” (Xn terminal is set as 13) is active, the frequency converter will keep on DC-braking before the digital input goes inactive, even if the time [b1.42] is elapsed.

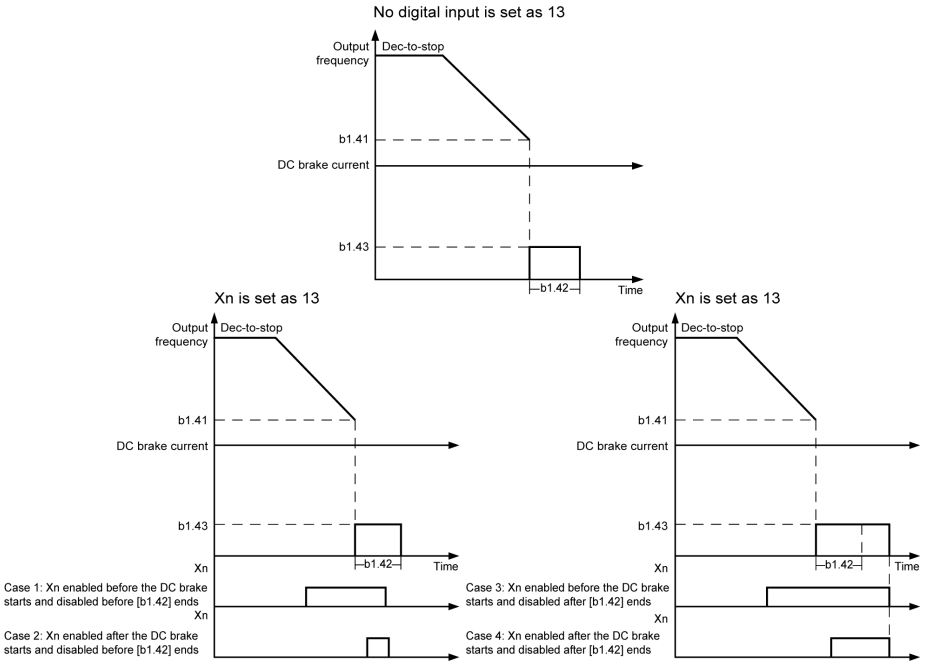

Fig.8-8: Stopping DC braking

For the actual stopping DC braking current calculation, see descriptions in parameter [b1.30].

b1.44	Reserved
b1.45	**Overexcitation deceleration gain**
Setting range	1.00 ~ 1.40
Minimum unit	0.01
Factory default	1.00

“Overexcitation deceleration gain” is a gain to the V/F pattern needed for fine-tune of this function which determines the level of overexcitation.

- Higher value of gain will increase the braking capability of overexcitation.
- Reduce the value of [b1.45] when the motor slip gets too high, which can trigger overcurrent (OC), frequency converter overload (OL-1), or motor overload (OL-2) faults.

b1.46~b1.49	Reserved

8.3 Group S0: V/F control

S0.00	V/F control mode
Setting range	0 ~ 2
Minimum unit	1
Factory default	0

- 0: Linear curve

  This mode refers to linear voltage / frequency control, which is suitable for normal constant torque loads as shown in the figure below.

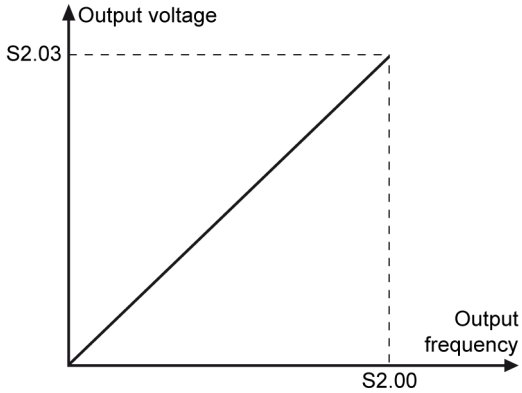

Fig.8-9: Linear curve

- 1: Square curve

  This mode refers to square voltage / frequency control, which is suitable for variable torque loads of fans, pumps, etc.

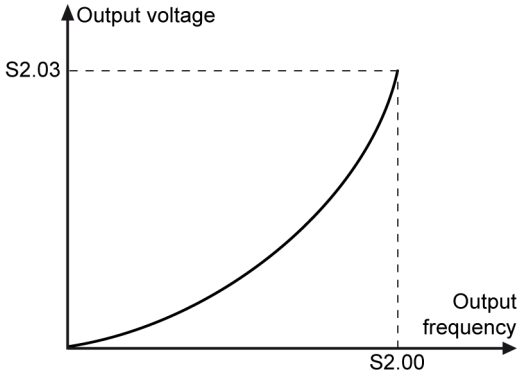

Fig.8-10: Square curve

- 2: User-defined multipoint curve

  Users can define a V/F curve with [S0.01] ~ [S0.06] for special loads of dewatering machines, centrifuges, etc.

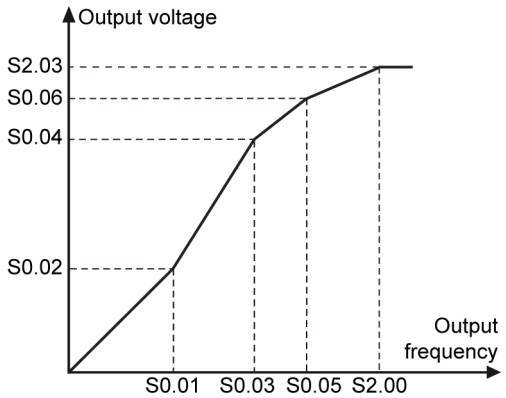

Fig.8-11: User-defined multipoint curve

⚠ WARNING

Excessive low-frequency voltages may cause the motor to overheat and be destroyed, and the frequency converter may stall due to overcurrent or activate overcurrent protection!

S0.01	V/F frequency 1
Setting range	0.00 ~ [S0.03]
Minimum unit	0.01 Hz
Factory default	0.00 Hz
S0.02	**V/F voltage 1**
Setting range	0.0 % ~ 120.0 % (Rated motor voltage)
Minimum unit	0.1 %
Factory default	0.0 %
S0.03	**V/F frequency 2**
Setting range	[S0.01] ~ [S0.05]
Minimum unit	0.01 Hz
Factory default	0.00 Hz
S0.04	**V/F voltage 2**
Setting range	0.0 % ~ 120.0 % (Rated motor voltage)
Minimum unit	0.1 %
Factory default	0.0 %
S0.05	**V/F frequency 3**
Setting range	[S0.03] ~ [b1.05]
Minimum unit	0.01 Hz
Factory default	0.00 Hz
S0.06	**V/F frequency 3**
Setting range	0.0 % ~ 120.0 % (Rated motor voltage)
Minimum unit	0.1 %
Factory default	0.0 %

Each V/F frequency is limited by neighbouring V/F frequencies. In this case, the frequencies of these points must be set in an ascending sequence:

0 ≤ V/F frequency 1 ≤ V/F frequency 2 ≤ V/F frequency 3 ≤ Motor rated frequency

It is necessary to have voltages above rated voltage in the field weakening range. For this,

- the maximum value of [S0.05] "V/F frequency 3" can be above the rated frequency.
- the maximum value of [S0.06] "V/F voltage 3" can be increased above 100 %.

There are two possibilities for the V/F curve:

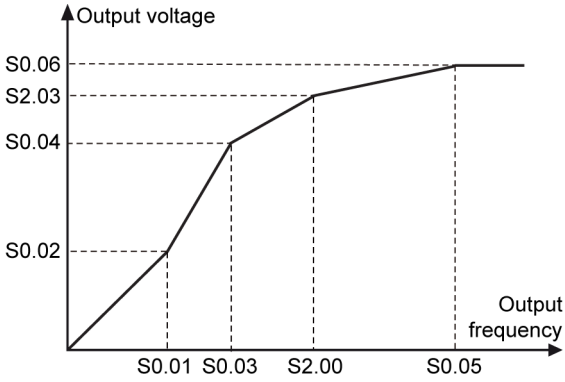

Fig.8-12: [S0.05] "V/F frequency 3" above [S2.00] "motor rated frequency"

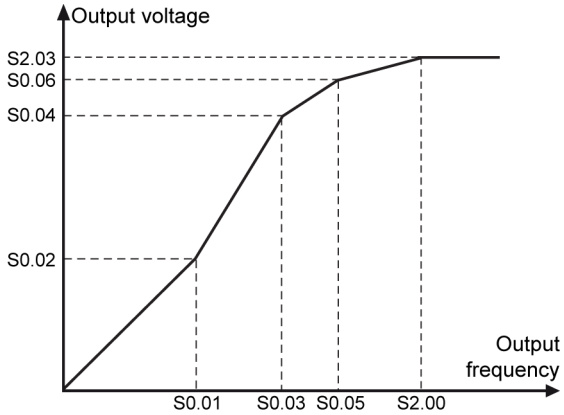

Fig.8-13: [S0.05] "V/F frequency 3" below [S2.00] "motor rated frequency"

In this case, the output voltage is limited to 100 % even if [S0.06] "V/F voltage 3" is above 100 %.

S0.07~S0.19	Reserved
S0.20	**Rated motor slip frequency**
Setting range	0.00 ~ 20.00 Hz
Minimum unit	0.01 Hz
Factory default	0.00 Hz

Used to compensate the speed difference caused by the load in V/F control, and to ensure that the rotator's speed is close to the synchronous speed and improve the mechanical behavior of the motor, as shown in the figure below:

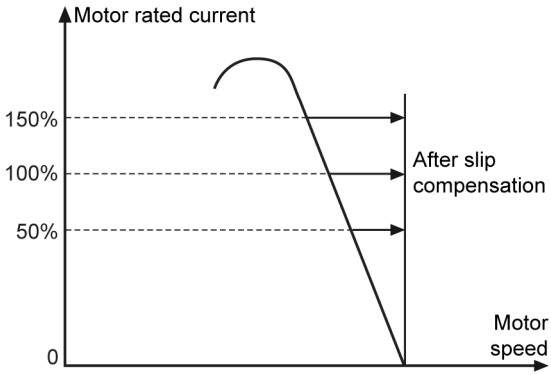

Fig.8-14: Slip frequency compensation

This parameter should be set according to the data on the motor nameplate. If it is unavailable on the nameplate, please calculate the data with the formular below:

$$n_s = f_n \bullet 60 / p$$

$$s = \frac{n_s - n_n}{n_s}$$

$$f_s = s \bullet f_n$$

n_s	synchronous speed	P	numbers of pole pairs
S	rated slip	n_n	rated speed
f_s	rated slip frequency	f_n	rated frequency

Fig.8-15: Slip frequency calculation

- If the slip frequency compensation is too large, the motor speed may exceed the synchronous speed.
- Slip compensation will not work under circumstances of acceleration, deceleration, regenerative mode and DC braking.

S0.21	Voltage boost
Setting range	0.0 % ~ 20.0 % (Rated motor voltage)
Minimum unit	0.1 %
Factory default	5.0 %

Parameter Settings

To obtain higher output torque and better stabilization, especially in low speed range, the voltage generated at the motor resistor must be taken into account. So, a voltage boost must be provided. This voltage boost is dependent on the corresponding parameters.

- [S0.21]=0.1 % ~ 20.0 %: manual torque boost

  This value demonstrates the voltage boost value at zero frequency. For other frequency range, the voltage boost value is linear / square decreasing with increasing output frequency before a certain frequency.

  For linear V/F curve, this function is only valid before half of base frequency, for example: if "Base frequency" [S2.00] is 50.00 Hz, then torque boost function is only valid before 25.00 Hz.

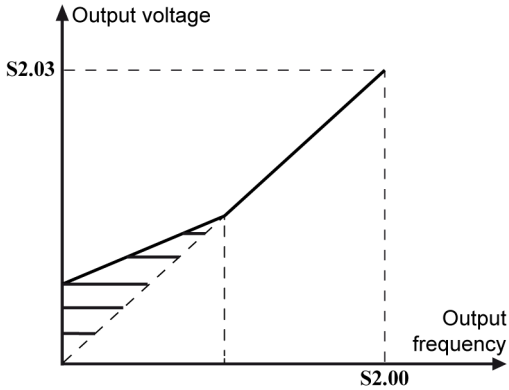

Fig.8-16: Linear V/F curve manual torque increase

For square V/F curve, this function is valid before base frequency, for example: if base frequency is 50.00 Hz, then torque boost function is only valid before 50.00 Hz.

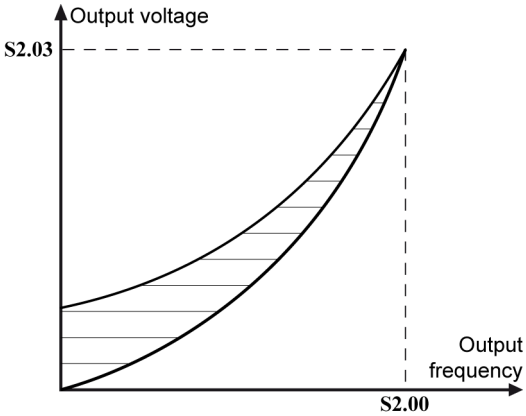

Fig.8-17: Square V/F curve manual torque increase

For user-defined curve, the boost rule is the same with linear V/F curve.

- [S0.21]=0.0 %: automatic torque boost

  Determines automatically the percentage of output voltage increase based on the output frequency and the load current. The linear and square V/F curves for automatic torque boost are shown as below. See parameter [S0.22] for more details.

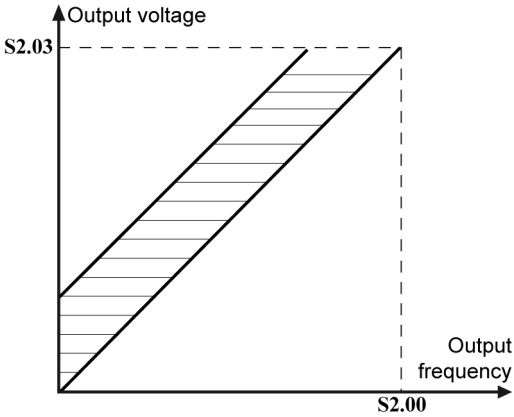

Fig.8-18: Linear V/F curve auto torque boost

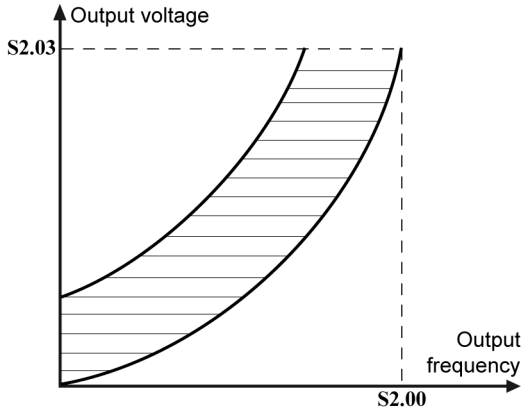

Fig.8-19: Square V/F curve auto torque boost

S0.22	I*R boost factor
Setting range	0%~320%
Minimum unit	1%
Factory default	100%

Used for further adjustment of the voltage boost. Its default value is 100 % which means no adjustment is needed. The formula is shown as below:

$$\text{Voltage boost} = \sqrt{3} * 0.5 * I_1 * R_1 * [\text{S0.22}]$$

Fig.8-20: Voltage boost

R_1: stator resistance

I_1: stator current

Thus, R_1 should be preset or calculated or tuned, and then input to [S2.10].

S0.24	Heavy load voltage stabilization
Setting range	0: disable; 1: enable
Minimum unit	1
Factory default	1

Used to depress the fluctuations in output voltage and current, which are caused by bigger impact to DC bus voltage in case of heavy load.

S0.30	Current limitation control
Setting range	0: OFF 1: OFF at constant speed 3: ON at constant speed
Minimum unit	1
Factory default	0
S0.31	**Automatic current limitation level**
Setting range	20 % ~ 250 % (Rated frequency converter current)
Minimum unit	1 %
Factory default	200 %
S0.32	**Current regulator proportion factor**
Setting range	0.000 ~ 1.000
Minimum unit	0.001
Factory default	0.060
S0.33	**Current regulator integrating time constant**
Setting range	0.001 ~ 10.000
Minimum unit	0.001
Factory default	0.200

[S0.30]: Used to limit current, so that the tripping of frequency converter is avoided. The function is useful for loads with large inertia or sudden changes.

3 modes of current limitation control can be selected:

- [S0.30]=0: OFF.

  Current limitation control will not be disabled in any case.
- [S0.30]=1: OFF at constant speed.

  Current limitation control works during Acc. and Dec., but does not work at constant speed.
- [S0.30]=3: ON at constant speed.

  Current limitation control works in all cases: Acc., Dec. and constant speed.

The current regulator is a PI regulator with configurable P factor and I factor.

- The higher set value of proportion factor [S0.32], the faster the current change will be.
- The higher set value of I factor [S0.33], the less accuracy of current suppression.

- The default value of [S0.32] and [S0.33] can satisfy most applications, if slight modification is needed, please try to increase Proportion factor first to make sure there is no oscillation, then decrease Integrating time to make sure fast responding and no overshooting.
- [E4.03] “Stall overcurrent prevention level” should be smaller than [S0.31] “Automatic current limitation level”, otherwise warning "PrSE" will be displayed and parameter will not be changed.

8.4 Group S2: Motor and Encoder Parameters

S2.00	Rated motor frequency
Setting range	5.00 ~ 400.00 Hz
Minimum unit	0.01 Hz
Factory default	50.00 Hz
S2.01	**Rated motor rotation speed**
Setting range	1 ~ 30000 rpm
Minimum unit	1 rpm
Factory default	Depends on model
S2.02	**Rated motor power**
Setting range	0.1 ~ 1000.0 kW
Minimum unit	0.1 kW
Factory default	Depends on model
S2.03	**Rated motor voltage**
Setting range	0 ~ 480 V
Minimum unit	1 V
Factory default	Depends on model
S2.04	**Rated motor current**
Setting range	0.01 ~ 655.00 A
Minimum unit	0.01 A
Factory default	Depends on model
S2.05	**Power-factor**
Setting range	0.50 ~ 0.95
Minimum unit	0.01
Factory default	Depends on model
S2.10	**Stator resistance**
Setting range	0.00 ~ 50.00 Ω
Minimum unit	0.01 Ω

Factory default	Depends on model
S2.11	**Rotator resistance**
Setting range	0.00 ~ 50.00 Ω
Minimum unit	0.01 Ω
Factory default	Depends on model
S2.12	**Leakage inductance**
Setting range	0.00 ~ 200.00 mH
Minimum unit	0.01 mH
Factory default	Depends on model
S2.13	**Mutual inductance**
Setting range	0.0 ~ 3000.0 mH
Minimum unit	0.1 mH
Factory default	Depends on model
S2.14	**No-load current**
Setting range	0.00 ~ [S2.04]
Minimum unit	0.01 A
Factory default	Depends on model
S2.15	**Physical data calculation**
Setting range	0 ~ 3
Minimum unit	1
Factory default	0

The motor parameters ([S2.00] ~ [S2.05]) must be set before using "Physical data calculation" [S2.15]. The necessary information can be found on the nameplate of motor.

- [S2.15]=0: No action.
- [S2.15]=1: Calculation. After the calculation is finished, parameters [S2.10] ~ [S2.14] will be updated.
- [S2.15]=2: Automatic adjustment while the motor is in static mode.
- [S2.15]=3: Automatic adjustment while the motor is rotating.

S2.20	**Sensor type**
Setting range	0: PTC; 1: NTC
Minimum unit	1
Factory default	0
S2.21	**Input channel of motor temperature**
Setting range	0: Invalid; 1: Analog input voltage
Minimum unit	1

Parameter Settings

Factory default	0
S2.22	**Protection level**
Setting range	0.0 ~ 10.0
Minimum unit	0.1
Factory default	2.0
S2.23	**Thermal motor time constant**
Setting range	0.0 ~ 400.0min
Minimum unit	0.1min
Factory default	Depends on model

Used to protect the motor against overheat. There are two means of motor thermal protections.

1. Protection with temperature sensor

   A temperature sensor needs to be connected externally to the frequency converter. For this matter, 10 V and GND output pins are available on the external signal connector of the frequency converter.

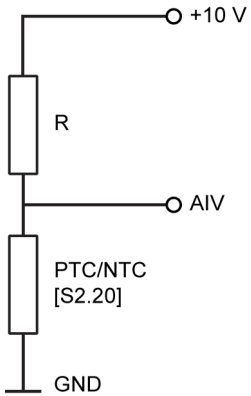

Fig.8-21: Protection with temperature sensor

- For a good resolution of temperature with continuous sensors (in general: NTCs), the value of resistor R in the figure should be close to the sensor resistance at the motor temperature limit.
- For switching sensors (in general: PTCs), the value of resistor R in the figure should be close to the sensor resistance at high temperature.
- A protection threshold may be defined by users according to the sensor's features. If AIV is defined for other purpose, the protection with sensor could not be enabled ([S2.21] is always 0).

2. Protection without temperature sensor

   This function is based on the thermal model of the motor. The simplified thermal model of motor is shown as below:

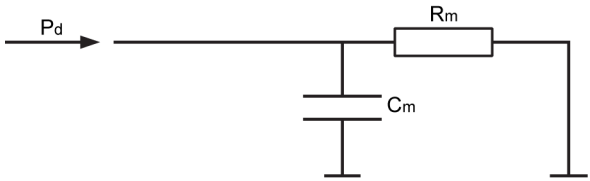

Fig.8-22: Simplified thermal model of motor with PT1 model

☞ The default value of "Thermal motor time constant" [S2.23] is dependent on the device type. If "Motor overload protection" OL-2 happens frequently, please ensure that the output current of the frequency converter not exceeds 110 % of the motor rated current, and increase the value of [S2.23] appropriately.

8.5 Group S3: Running Parameters

S3.00	Jogging frequency
Setting range	0.00 ~ [b1.05]
Minimum unit	0.01 Hz
Factory default	5.00 Hz
S3.01	**Jogging acceleration time**
Setting range	0.1 ~ 6000.0s
Minimum unit	0.1s
Factory default	5.0s
S3.02	**Jogging deceleration time**
Setting range	0.1 ~ 6000.0s
Minimum unit	0.1s
Factory default	5.0s

- Jogging command input has the highest priority and is independent of the “RUN” / ”STOP” command input. As long as jogging command is activated, the frequency converter will start immediately to run to the frequency defined by [S3.00] with acceleration / deceleration time defined in [S3.01] and [S3.02] no matter the frequency converter is in RUN mode or STOP mode. See more details in the figure below:

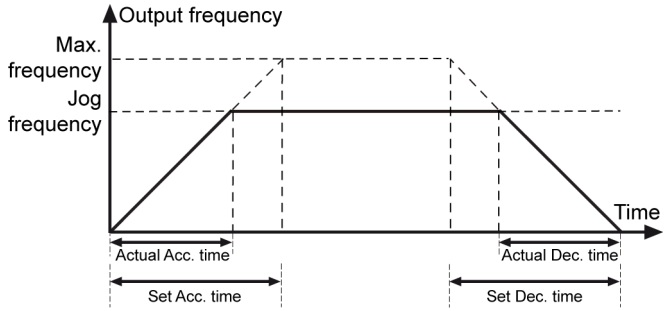

Fig.8-23: Jogging Acc. / Dec. time

- Jogging command only comes from external terminals or communication.
- When jogging command is activated, the motor runs with predefined frequency; when the jogging command is inactive, the motor resumes the previous status.
- If jogging forward and jogging reverse are active at the same time, the frequency converter will STOP; if the jogging forward / reverse command is activated during jogging reverse / forward, the frequency converter will STOP according to [b1.40] “Stopping mode”.

S3.05	Skip frequency 1
Setting range	0.00 Hz ~ [b1.06]
Minimum unit	0.01 Hz
Factory default	0.00 Hz
S3.06	**Skip frequency 2**
Setting range	0.00 Hz ~ [b1.06]
Minimum unit	0.01 Hz
Factory default	0.00 Hz
S3.07	**Skip frequency 3**
Setting range	0.00 Hz ~ [b1.06]
Minimum unit	0.01 Hz
Factory default	0.00 Hz
S3.08	**Skip frequency range**
Setting range	0.00 ~ 30.00 Hz
Minimum unit	0.01 Hz
Factory default	0.00 Hz

To avoid the mechanical resonance, this function is implemented to define 3 skip frequencies. 3 skip frequencies are supported as shown in the figure below:

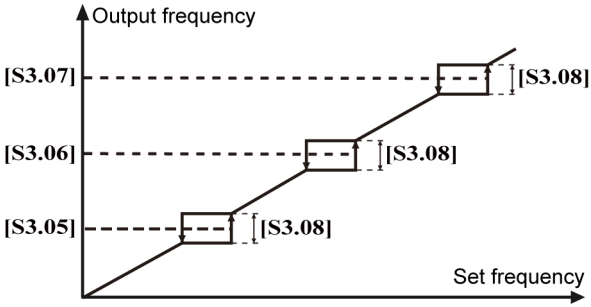

Fig.8-24: Skip frequency and range

- If set frequency is in one range and previous output is above this area, the upper frequency (the skip frequency + skip range / 2) is output;
- If set frequency is in one range and previous output is below this area, the lower frequency (the skip frequency - skip range / 2) is output;
- If set frequency is in one range and previous output is within this area, previous output is output.

- If the set frequency is in the hysteresis range (including the boundaries) of defined skip frequency, the frequency is set to upper / lower limit of skip frequency range;
- If the skip frequency range is set to 0.00 Hz, no skip frequency control is enabled;
- Do not make the 3 frequency ranges overlap or nest in each other.

S3.09	Skip window acceleration factor
Setting range	1 ~ 100
Minimum unit	1
Factory default	1

This parameter makes the acceleration inside the skip-window faster, the range for this factor is 1 (normal acceleration) to 100 (acceleration is 100 times faster).

The resulting acceleration and deceleration time will be shorter than the setting value when the factor is above 1.

S3.15	Restarting after power fault
Setting range	0 ~ 1
Minimum unit	1
Factory default	0

Parameter Settings

S3.16	Waiting time for restarting after power fault
Setting range	0.0 ~ 10.0s
Minimum unit	0.1s
Factory default	1.0s

- [S3.15]=0: Prohibited. No restarting after power fault.
- [S3.15]=1: Allowed. Restarting after power fault.
- When [b1.02]=0 (RUN command source is from panel), and the frequency converter was running before power off:
  - [S3.15]=1: the frequency converter will automatically start after waiting for the time of [S3.16] without pressing the Run key again after power on.
  - [S3.15]=0: the frequency converter only starts after the Run key is pressed.

  When other RUN command source is selected ([b1.02]≠0):
  - [S3.15]=1: the frequency converter will automatically start after waiting for the time of [S3.16] only if a running command exists after power on.
  - [S3.15]=0: the frequency converter will remain static, even if a running command exists after power on. To start the frequency converter, please cancel and reactivate the running command.

- If the frequency converter was running before power off due to 3 wire control, then after power on, the restart of frequency converter will be decided by the statue of this 3-wire terminal sine it is responsible for STOP.
- If the frequency converter was running before power off due to a power supply interference, UE-1 will occur by undervoltage situation, the frequency converter will not restart automatically after input power supply recovers even [S3.15]=1. This is different from the restarting by automatic fault reset, see more details in [E4.15] and [E4.16].
- During the waiting time after power on, if the active run command source is from Communication and there is request on the communication to stop the frequency converter, the frequency converter will not restart automatically.

S3.20	Brake chopper action point
Setting range	200 V class: 300 ~ 390 V 400 V class: 600 ~ 885 V
Minimum unit	1 V
Factory default	200 V class: 390 V 400 V class: 885 V
S3.21	**Braking ratio**

Setting range	1 % ~ 100 %
Minimum unit	1 %
Factory default	100 %
S3.30	**Forward and reverse rotation dead zone time**
Setting range	0.0 ~ 60.0s
Minimum unit	0.1s
Factory default	4.0s

[S3.30] represents the waiting time when the frequency converter switches from forward / reverse rotation to reverse / forward rotation. See the figure below for more information:

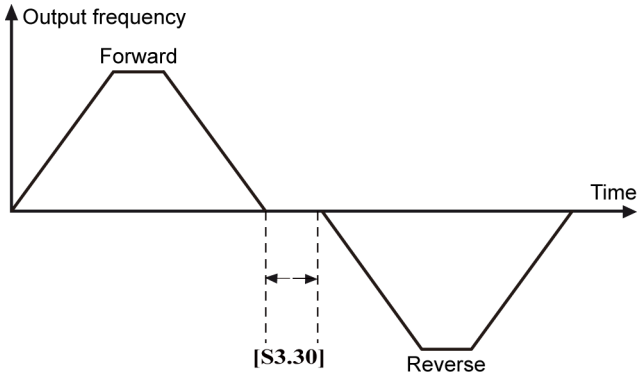

Fig.8-25: Forward and reverse rotation dead zone time

S3.32	**UP / DOWN set velocity**
Setting range	0.10 ~ 100.0 Hz/s
Minimum unit	0.01 Hz/s
Factory default	1.00 Hz/s
S3.33	**UP / DOWN terminals initial frequency**
Setting range	0 ~ [b1.06]
Minimum unit	0.01 Hz
Factory default	0.00 Hz

Used to change the output frequency. When [b1.00] or [b1.16] is set to 4, the UP / DOWN control is activated as the command value. In this mode, the output frequency can be adjusted easily with UP, DOWN and zeroing terminals. Please follow the following steps to adjust the output frequency.

1. Set [b1.00] / [b1.16]=4.

Parameter Settings

2. Define any 3 external control terminals in parameters [E0.01] ~ [E0.05] with one set to 9 "Frequency increment UP command", one set to 10 "Frequency decrement DOWN command", and another set to 11 "Zeroing of external terminal frequency setting".
3. Set [S3.32] "UP / DOWN setting ratio" for the frequency change rate of terminals UP / DOWN.

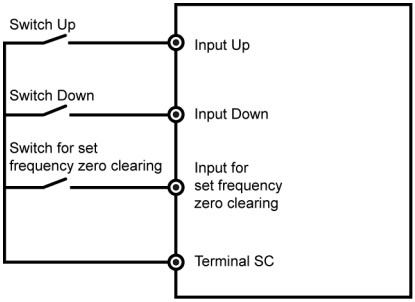

Fig.8-26: External terminals Up / Down settings

The combination of the control terminals are described as below:

Input for set frequency zero clearing	Open				Closed
Input UP	Open		Closed		Either
Input DOWN	Open	Closed	Open	Closed	Either
Current set frequency of the frequency converter	Hold	Decrease	Increase	Hold	Zero

- UP / DOWN / Zeroing terminals only work in RUN state.
- Whether the frequencies modified via UP / DOWN terminals will or not be saved after power off depends on parameter [b1.01].

S3.34	Fan control
Setting range	0 ~ 1
Minimum unit	1
Factory default	0

- 0: Automatically controlled

  Automatically control the start and stop of the cooling fan according to the detected temperature of the heat sink.
- 1: Always on

  The fan will start as long as the frequency converter is "switched on".

S3.35	Stop by Stop key
Setting range	0: Only valid for operating panel control 1: Valid for all control means
Minimum unit	1
Factory default	1

8.6 Group E0: Input Terminal Parameters

E0.00	2-wire / 3-wire running control
Setting range	0 ~ 2
Minimum unit	1
Factory default	0

In order to run the frequency converter with "2-wire / 3-wire running control", [b1.02] / [b1.17] needs to be set as 1.

For example: one terminal is assigned as FWD ([E0.01]=23) and connected to K1; another terminal is assigned as REV ([E0.02]=24) and connected to K2.

- [E0.00]=0: Forward / Stop, Reverse / Stop

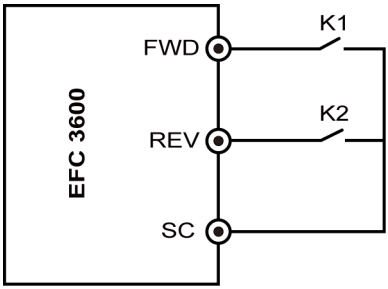

Fig.8-27: 2-wire control_1

K1	K2	Running status
Inactive	Inactive	Stop
Inactive	Active	Reverse
Active	Inactive	Forward
Active	Active	Stop

☞ If both terminals are active at the same time, the frequency converter stops according to the stopping mode configured [b1.40] and both directions LEDs (FWD and REV) are switched on.

Parameter Settings

- [E0.00]=1: Forward / Reverse, RUN / STOP

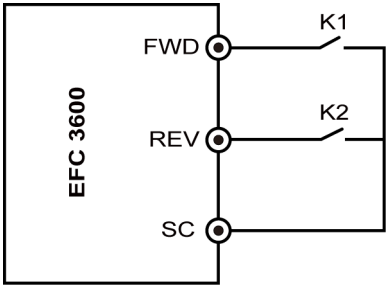

Fig.8-28: 2-wire control_2

K1	K2	Running status
Inactive	Inactive	Stop
Inactive	Active	Stop
Active	Inactive	Forward
Active	Active	Reverse

- [E0.00]=2: 3-wire control

  An additional terminal needs to be configured as "3-wire running control" and connected as below:

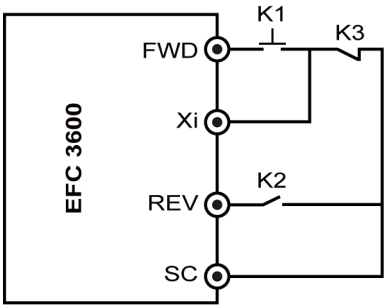

Fig.8-29: 3-wire control

- K1 is RUN command source
- K2 is used for direction selection
  - 0=forward
  - 1=reverse
- K3 is STOP command source (3-wire mode N.C. terminal)
  - FWD input is edge-sensitive

– REV input is level-sensitive
– Preselect the direction before setting RUN command, otherwise direction will change (with a possible "dead zone time").

- When setting [E0.00] "2-wire / 3-wire running control", 3-wire control can only be selected after the 3-wire input terminal has been mapped. Otherwise, “PrSE” warning occurs.
- When setting [E0.01] ~ [E0.05], the 3-wire input terminal can only be unselected after the 3-wire control has been disabled. Otherwise, “PrSE” warning occurs.

E0.01	Terminal X1
Setting range	0 ~ 28
Minimum unit	1
Factory default	0
E0.02	**Terminal X2**
Setting range	0 ~ 28
Minimum unit	1
Factory default	0
E0.03	**Terminal X3**
Setting range	0 ~ 28
Minimum unit	1
Factory default	0
E0.04	**Terminal X4**
Setting range	0 ~ 28
Minimum unit	1
Factory default	0
E0.05	**Terminal X5**
Setting range	0 ~ 28
Minimum unit	1
Factory default	0

5 external digital input terminals are available with PNP and NPN input modes.

- 0: No action (The frequency converter has no action even if there is input signal. Multiple selection is possible.)
- 1: Multi-speed terminal 1
- 2: Multi-speed terminal 2
- 3: Multi-speed terminal 3

8 multi-speeds are available with the combinations of the 3 terminals.

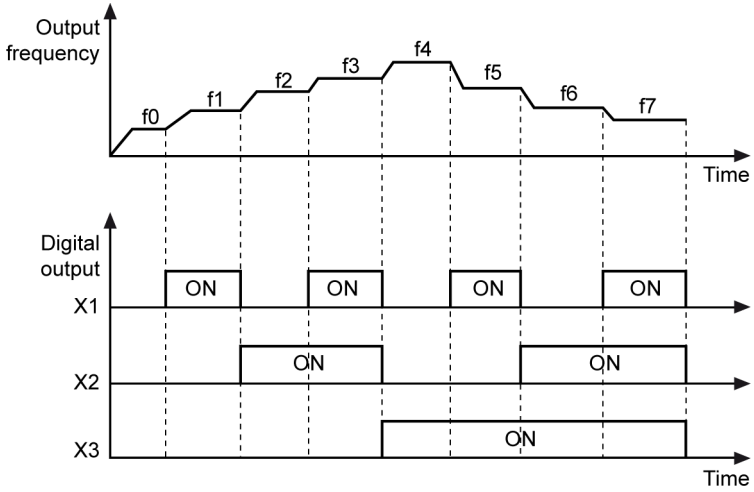

Fig.8-30: Given by multi-speed

X3	X2	X1	Command frequency	Corresponding frequency and Acc. / Dec. time parameter
OFF	OFF	OFF	Multi-speed frequency 0	[b1.04], [E2.35]
OFF	OFF	ON	Multi-speed frequency 1	[E2.10], [E2.37]
OFF	ON	OFF	Multi-speed frequency 2	[E2.11], [E2.39]
OFF	ON	ON	Multi-speed frequency 3	[E2.12], [E2.41]
ON	OFF	OFF	Multi-speed frequency 4	[E2.13], [E2.43]
ON	OFF	ON	Multi-speed frequency 5	[E2.14], [E2.45]
ON	ON	OFF	Multi-speed frequency 6	[E2.15], [E2.47]
ON	ON	ON	Multi-speed frequency 7	[E2.16], [E2.49]

Fig.8-2: Multi-speed terminal settings

- 4: Reserved
- 5: Acceleration / deceleration time terminal 1
- 6: Acceleration / deceleration time terminal 2

4 options of acceleration / deceleration time are available with the combinations of the 2 terminals, as shown in the table below.

Acc. / Dec. time terminal 2	Acc. / Dec. time terminal 1	Selected Acc. / Dec. time
Inactive	Inactive	Acceleration time 1 is selected ([b1.20]) Deceleration time 1 is selected ([b1.21])
Inactive	Active	Acceleration time 2 is selected ([E2.00]) Deceleration time 2 is selected ([E2.01])
Active	Inactive	Acceleration time 3 is selected ([E2.02]) Deceleration time 3 is selected (E2.03])
Active	Active	Acceleration time 4 is selected ([E2.04]) Deceleration time 4 is selected ([E2.05])

Fig.8-3: Acc. / Dec. time options

- 7: 3-wire running control

  Used to control the frequency converter in 3-wire control mode. See parameter [E0.00].

- 8: Freewheeling to stop enabled

  "Freewheeling to stop enabled" generates a STOP command and forces the frequency converter to freewheel to stop regardless of the stopping mode configured by [b1.40].

- 9: Frequency increment UP command
- 10: Frequency decrement DOWN command
- 11: Zeroing of external terminal frequency setting

  The above three functions are used to change the frequency set with terminals UP / DOWN or clear the frequency to 0 Hz by the zeroing terminal. See parameters [S3.32] and [S3.33].

- 12: Reserved
- 13: Stopping DC braking enabled

  This function is used when stopping mode is set with [b1.40]=0. For more details, see parameters [b1.40] ~ [b1.43].

- 14: Reserved
- 15: Simple PLC prohibited

  If the PLC is running and this terminal is switched on, the frequency converter will stop output and motor freewheeling to stop. While if this terminal is switched off, the frequency converter will stay standstill until the next RUN command is activated.

[E2.30]	Xi=15	Simple PLC status
≠0	OFF	Running
≠0	ON	Inactive

Parameter Settings

[E2.30]	Xi=15	Simple PLC status
=0	OFF	Inactive
=0	ON	Inactive

- 16: Simple PLC paused

  When the terminal is switched on, the PLC running is paused and the frequency converter runs at zero speed; when the terminal is switched off, the frequency converter resumes the status before the PLC pause. This function is dependent on the level of the input terminal signal.

Step	Status of Xi=16	Status of Xa (RUN command)	Status of frequency converter	Comment
1	Inactive	Active	Run	
2	Active	Active	Decelerate to 0 Hz (no stop DC braking)	Dec. time is based on the current stage x configuration
3	Inactive	Active	Accelerate to last target stage	Acc. time is based on last target stage x configuration
4	Inactive	Inactive	Stop	Stop according to [b1.40]
5	Inactive	Active	Run	Restart from beginning

- 17: Reserved
- 18: The second frequency command source enabled

  This function is used to switch frequency command source between the first channel ([b1.00]) and the second channel ([b1.16]), which is level-sensitive. When this function is inactive, the first channel ([b1.00]) is active; when this function is active, the second channel ([b1.16]) is active.

  If status of external terminals for frequency source switching is changed during running, the new frequency command is accepted and the frequency converter accelerates / decelerates to the new frequency command.
- 19: External fault N.O. contact input
- 20: External fault N.C. contact input

  An external fault signal is connected to these terminals and if the signal is active, the frequency converter indicates an “E-St” error and stops.

  The reaction of the functions “External fault N.O. contact input” and “External fault N.C. contact input” is defined as below:

  N.C.:

  – If terminal is active (closed), there is no error.

  – If terminal is inactive (open), there is an error.

N.O.:

– If terminal is inactive (open), there is no error.
– If terminal is active (closed), there is an error.

- 21: External RESET input

  This function works in the same manner as the keyboard error reset function does, which allows remote fault reset. "External RESET input" depends on the edge of the input signal (signal changes from inactive to active).

- 22: The second run command source enabled

  This function is used to switch RUN / STOP command source between the first channel ([b1.02]) and the second channel ([b1.17]). When this terminal is inactive, the first channel ([b1.02]) is active; when this terminal is active, the second channel ([b1.17]) is active.

- 23: Forward (FWD)
- 24: Reverse (REV)

  These two functions are used for RUN / STOP command control, see parameter [E0.00].

- 25: Forward jogging
- 26: Reverse jogging

  For jogging functions, see parameters [S3.00]~[S3.02].

- 27: Counting input
- 28: Counting clear

  The above two functions are counting functions of an external signal. See parameters [E1.13] and [E1.14].

E0.10	Analog input voltage (AIV) channel gain k1
Setting range	0.00 ~ 10.00
Minimum unit	0.01
Factory default	1.00
E0.12	**Analog input current (AIC) channel gain k3**
Setting range	0.00 ~ 10.00
Minimum unit	0.01
Factory default	1.00
E0.15	**Analog channel filtering time**
Setting range	0.000 ~ 2.000s
Minimum unit	0.001s
Factory default	0.100s
E0.20	**Analog setting curve selection**

Parameter Settings

Setting range	0 ~ 3 0: AIC-reference characteristic curve 1, AIV-reference characteristic curve 1 1: AIC-reference characteristic curve 1, AIV-reference characteristic curve 2 2: AIC-reference characteristic curve 2, AIV-reference characteristic curve 1 3: AIC-reference characteristic curve 2, AIV-reference characteristic curve 2
Minimum unit	1
Factory default	0
E0.21	**Curve 1 min. reference**
Setting range	0.0 % ~ [E0.23]
Minimum unit	0.1 %
Factory default	0.0 %
E0.22	**Frequency corresponding to curve 1 min. reference**
Setting range	0.00 ~ [b1.06]
Minimum unit	0.01 Hz
Factory default	0.00 Hz
E0.23	**Curve 1 max. reference**
Setting range	[E0.21] ~ 100.0 %
Minimum unit	0.1 %
Factory default	100.0 %
E0.24	**Frequency corresponding to curve 1 max. reference**
Setting range	0.00 ~ [b1.06]
Minimum unit	0.01 Hz
Factory default	50.00 Hz
E0.25	**Curve 2 min. reference**
Setting range	0.0 % ~ [E0.27]
Minimum unit	0.1 %
Factory default	0.0 %
E0.26	**Frequency corresponding to curve 2 min. reference**
Setting range	0.00 ~ [b1.06]
Minimum unit	0.01 Hz
Factory default	0.00 Hz
E0.27	**Curve 2 max. reference**

Setting range	[E0.25] ~ 100.0 %
Minimum unit	0.1 %
Factory default	100.0 %
E0.28	**Frequency corresponding to curve 2 max. reference**
Setting range	0.00 ~ [b1.06]
Minimum unit	0.01 Hz
Factory default	50.00 Hz

The frequency converter actually has two external analog inputs, AIV voltage signal (0 ~ 10 V) and AIC current signal (4 ~ 20 mA). When AIV or AIC input is used as the reference frequency channel, the relation between the reference channel and the set frequency is illustrated as below:

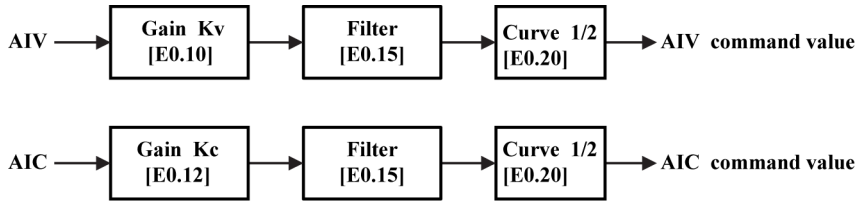

Fig.8-31: Relationship between reference channel and set frequency

- The relationship between "the reference frequency after gain and filter processing" with "the set frequency commands" is determined by [E0.21] ~ [E0.28] and [E0.20].
- AIC and AIV can use both curve 1 and curve 2.
- [E0.21] ~ [E0.24] are used to define characteristics of curve 1. See figure below:

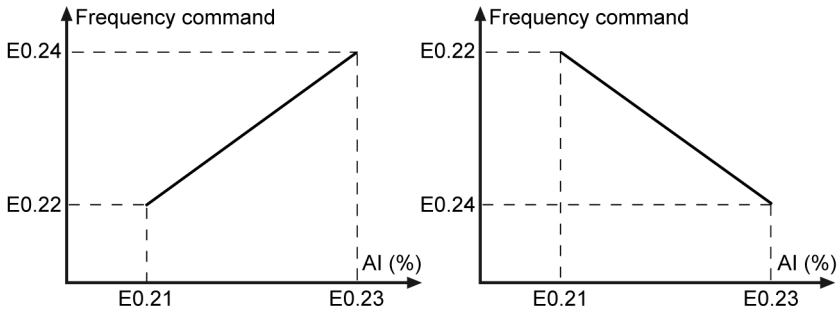

Fig.8-32: Characteristics curve 1

- [E0.25] ~ [E0.28] are used to define characteristics of curve 2. See figure below:

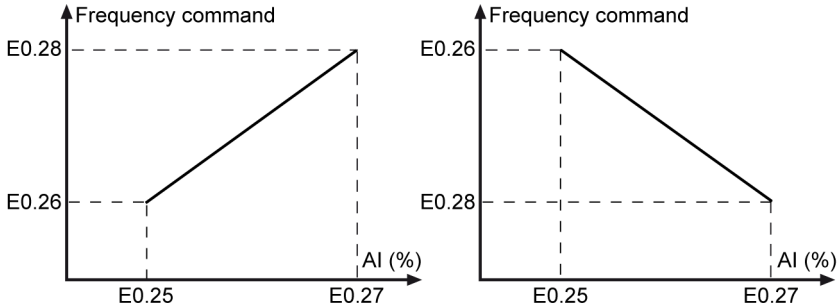

Fig.8-33: Characteristics curve 2

8.7 Group E1: Output Terminal Parameters

E1.00	OC outputs
Setting range	0 ~ 17
Minimum unit	1
Factory default	1
E1.02	**Relay outputs**
Setting range	0 ~ 17
Minimum unit	1
Factory default	1

- 0: Frequency converter ready for running

  After powering on, if no error happens and there is no run command, output active indicates that the frequency converter is ready for running.
- 1: Frequency converter is running

  The terminal outputs indicating signal when the frequency converter is running and has frequency output (including 0.00 Hz).
- 2: DC braking indication

  When the frequency converter is in the starting or stopping DC braking, output is active.
- 3: Frequency converter running at zero speed

  When the frequency converter is running with zero speed, output is active.

☞ During dead zone time of rotation direction change, there is no output for this selection.

- 4: Frequency / speed arrival signal

See related parameter "Frequency arriving at detection width" [E1.04].

- 5: Frequency level detection signal (FDT1)
- 6: Frequency level detection signal (FDT2)

  See related parameters [E1.05] ~ [E1.08].
- 7: Simple PLC phase completion indication

  When PLC mode [E2.30] = 1, 2 or 3, this terminal outputs a pulse at the end of every PLC stage. When a stage is finished a pulse is output with the duration of 0.5s. If one of the stages has a running time of 0.0s, this stage will be directly jumped over and there will be no pulse output. For details of simple PLC control, see parameters [E2.10]~[E2.16] and [E2.30]~[E2.50].

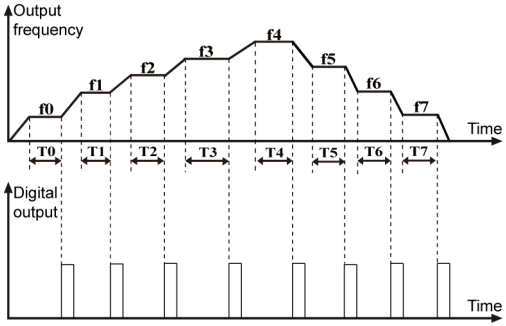

Fig.8-34: Simple PLC phase completion indication

If the running time of one of the stages is so short that it is finished before the “phase completion” signal of the previous stage is deactivated, the signal remains active and the pulse duration calculation is restarted.

- 8: Simple PLC cycle completion indication

  When PLC mode [E2.30]=1, 2 or 3, this terminal outputs a pulse (duration 0.5s) at the end of every cycle. See parameters [E2.10] ~ [E2.16] and [E2.30] ~ [E2.50].

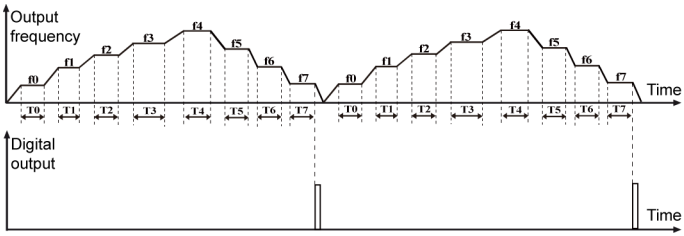

Fig.8-35: [E2.30]=1, 2 or 3

Parameter Settings

- 9: Reserved
- 10: Under voltage indication

  Active when DC bus voltage is lower than 230 VDC (200 V models) / 430 V (400 V models). It will be deactivated when DC bus voltage recovers and becomes stable.

☞ Any soft start error will activate this digital output.

- 11: Frequency converter overload pre-warning

  See parameters [E1.09] and [E1.11].
- 12: Motor overload pre-warning

  See parameters [E1.10] and [E1.12].
- 13: Stopped by the external fault

  This signal is activated when the error "E-St" is generated, and deactivated when the error is reset. If the frequency converter stops because of the external fault, output is active. For "E-St", see "External digital input" group.
- 14: Fault output

  Active when error occurs; inactive when error is reset.
- 15: Reserved
- 16: Target counter value reached

  When number of input pulse equals to the setting value defined in [E1.14], the output is active until next pulse arrives.
- 17: Middle counter value reached

  When number of input pulse equals to the setting value defined in [E1.13], the output is active until the next pulse after setting counter value comes.

  Example: [E1.13]=5, [E1.14]=8, the counter is reset with external terminal control, the output is described as below:

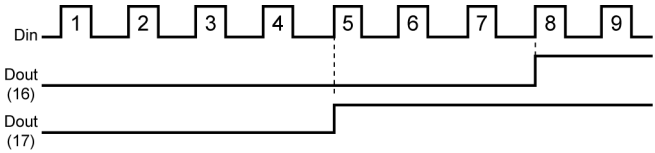

Fig.8-36: Middle counter value reached

E1.04	Frequency arriving at detection width
Setting range	0.00 ~ 400.0 Hz
Minimum unit	0.01 Hz
Factory default	2.50 Hz

This function is used to detect the difference between the output frequency and the set frequency. The indicative signals are outputted when the difference between the output frequency and the set frequency is within the range set in [E1.04], as shown in the figure below:

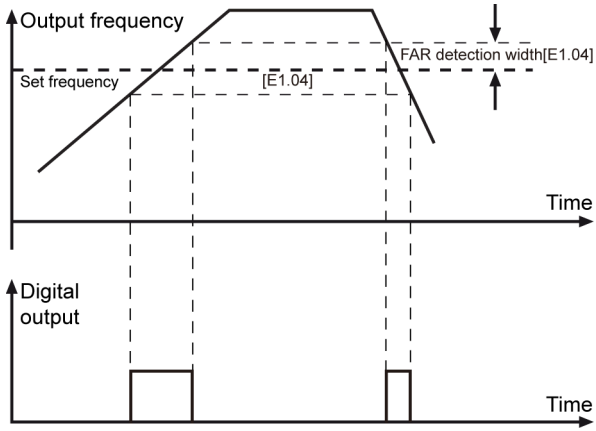

Fig.8-37: Frequency arriving at detection width

E1.05	Frequency detection level FDT1
Setting range	0.00 ~ 400.0 Hz
Minimum unit	0.01 Hz
Factory default	50.00 Hz
E1.06	**Frequency detection level FDT1 width**
Setting range	0.00 ~ [E1.05]
Minimum unit	0.01 Hz
Factory default	1.00 Hz
E1.07	**Frequency detection level FDT2**
Setting range	0.00 ~ 400.0 Hz
Minimum unit	0.01 Hz
Factory default	25.00 Hz
E1.08	**Frequency detection level FDT2 width**
Setting range	0.00 ~ [E1.07]
Minimum unit	0.01 Hz
Factory default	1.00 Hz

When the output frequency exceeds the frequency set by [E1.05] or [E1.07], the digital output "frequency level detection signal 1 or 2 (FDT1 or FDT2)" becomes active before

the output frequency is lower than the value set by "([E1.05] or [E1.07]) - (E1.06] or [E1.08])".

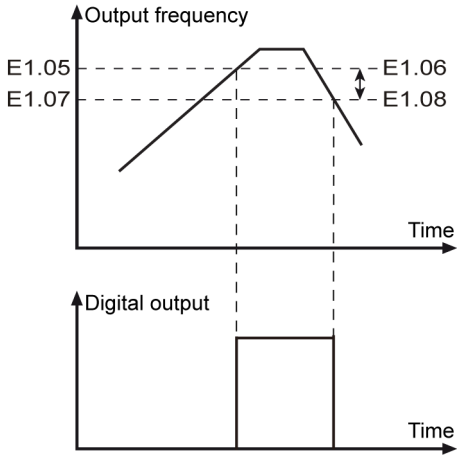

Fig.8-38: Frequency detection level

E1.09	Frequency converter overload pre-warning level setting
Setting range	20.0 % ~ 200.0 % (Rated frequency converter current)
Minimum unit	0.1 %
Factory default	110.0 %
E1.10	**Motor pre-warning level setting**
Setting range	100.0 % ~ 250.0 % (Rated motor current)
Minimum unit	0.1 %
Factory default	100.0 %

When the output current exceeds the threshold defined in [E1.09] for delay time defined in [E1.11], the function is active. The signal is immediately deactivated when the output current is lower than the threshold defined in [E1.09].

E1.11	Frequency converter overload pre-warning delay
Setting range	0.0 ~ 20.0s
Minimum unit	0.1s
Factory default	2.0s
E1.12	**Motor overload pre-warning delay**
Setting range	0.0 ~ 20.0s
Minimum unit	0.1s
Factory default	2.0s

When the output current exceeds the threshold defined in [E1.10] for delay time defined in [E1.12], the function is active. The signal is immediately deactivated when the output current is lower than the threshold defined in [E1.10].

E1.13	Middle count value
Setting range	0 ~ [E1.14]
Minimum unit	1
Factory default	0
E1.14	**Target count value**
Setting range	[E1.13] ~ 9999
Minimum unit	1
Factory default	0

The corresponding digital output for "Middle / Target count value reached" should be configured, see more details in [E1.00] and [E1.02].

After the counter has reached its Middle /Target value [E1.13] / [E1.14], it remains at this value until it is reset by a valid edge of the input terminal signal parameterized as “clear counting”. As long as the counter value is not reset, the digital outputs configured as “DOutx=16: Target counter value reached” and “DOutx=17: Middle counter value reached” remain active. These signals are reset by the next valid triggering edge of the input terminal signal parameterized as “counting signal input” after the counter value is cleared.

- If one of the parameters [E1.13], [E1.14] and / or digital input terminal configuration [E0.01] ~ [E0.05] is changed, the counter value is reset and digital outputs defined as “DOutx=16: Target counter value reached” and “DOutx=17: Middle counter value reached” are switched to be inactive immediately;
- The maximum allowed frequency of digital input is 50 Hz and the minimum allowed pulse width (both active and inactive) should be longer than 8ms.

E1.30	FM1 analog output selection
Setting range	0 ~ 7
Minimum unit	1
Factory default	0
E1.31	**FM1 channel mode**
Setting range	0: 0 ~ 10 V; 1: 2 ~ 10 V
Minimum unit	1
Factory default	0
E1.32	**FM1 gain setting**

Parameter Settings

Setting range	0.00 ~ 10.00
Minimum unit	0.01
Factory default	1.00

- [E1.30] is used to define the function of analog outputs, as shown below:

  [E1.30]=0: Output frequency. 0 ~ 10 V / 2 ~ 10 V, refers to 0 ~ max. frequency [b1.05]

  [E1.30]=1: Setting frequency. 0 ~ 10 V / 2 ~ 10 V, refers to 0 ~ max. frequency [b1.05]

  [E1.30]=2: Output current. 0 ~ 10 V / 2 ~ 10 V, refers to 0 ~ 2 x (rated current)

  [E1.30]=3: Reserved

  [E1.30]=4: Output voltage. 0 ~ 10 V / 2 ~ 10 V, refers to 0 ~ 1.2 x (rated voltage*)

  [E1.30]=5: Output power. 0 ~ 10 V / 2 ~ 10 V, refers to 0 ~ 1.2 x (rated power)

  [E1.30]=6: AIV. 0 ~ 10 V / 2 ~ 10 V, refers to 0 ~ 10 V

  [E1.30]=7: AIC. 0 ~ 10 V / 2 ~ 10 V, refers to 4 ~ 20 mA

---

*: Frequency converter rated voltage is defined in parameter [b0.20].

- [E1.31] is used to select output signals 0 ~ 10 V or 2 ~ 10 V.
- [E1.32] means the gain applied to analog output voltage.

  For example: When the gain value is 0.00, then the analog output voltage will be 0 V. In the case of "FM1 channel mode" [E1.31]=1: 2 ~ 10 V and source value is 0,

  – if gain=1.00, the analog output voltage will be 2 V.

  – if gain=5.00, the analog output voltage will be 10 V.

8.8 Group E2: Multi-speed and Simple PLC

E2.00	Acceleration time 2
Setting range	0.1 ~ 6000.0s
Minimum unit	0.1s
Factory default	5.0s
E2.01	**Deceleration time 2**
See [E2.00] "Acceleration time 2"	
E2.02	**Acceleration time 3**
See [E2.00] "Acceleration time 2"	
E2.03	**Deceleration time 3**
See [E2.00] "Acceleration time 2"	
E2.04	**Acceleration time 4**
See [E2.00] "Acceleration time 2"	
E2.05	**Deceleration time 4**
See [E2.00] "Acceleration time 2"	
E2.10	**Multi-speed frequency 1**
Setting range	0.00 ~ [b1.06]
Minimum unit	0.01 Hz
Factory default	0.00 Hz
E2.11	**Multi-speed frequency 2**
See parameter [E2.10] "Multi-speed frequency 1"	
E2.12	**Multi-speed frequency 3**
See parameter [E2.10] "Multi-speed frequency 1"	
E2.13	**Multi-speed frequency 4**
See parameter [E2.10] "Multi-speed frequency 1"	
E2.14	**Multi-speed frequency 5**
See parameter [E2.10] "Multi-speed frequency 1"	
E2.15	**Multi-speed frequency 6**
See parameter [E2.10] "Multi-speed frequency 1"	
E2.16	**Multi-speed frequency 7**
See parameter [E2.10] "Multi-speed frequency 1"	

Parameters [E2.10] ~ [E2.16] together with [b1.04] are used to set the frequencies in multi-speed control and simple PLC.

- Multi-speed control

  8 multiple speeds can be set via multi-speed control terminals, together with forward / reverse control terminal (FWD-CM and REV-CM) and acceleration / decelera-

tion terminals. For multi-speed control, the acceleration time / deceleration time, rotation direction for each stage can be configured via parameters [E2.35], [E2.37], [E2.39], [E2.41], [E2.43], [E2.45], [E2.47] and [E2.49].

1. Only 5 external terminals digital inputs are available for the frequency converter, so please properly assign these 5 terminals when acceleration / deceleration time terminal and FWD / REV terminal are needed.
2. [b1.00] / [b1.16] frequency setting source should be set to 6 before multi-speed control is activated.
3. The rotation direction of every stage depends not only on stage action selection but also on RUN command source, see more details in fig. 8-43 "Rotation direction and Acc. / Dec. for multi-speed / Simple PLC" on page 111.
4. If the set frequency of next stage is lower than current stage, it will decelerate to the next stage with the deceleration time of current stage; If the set frequency of next stage is higher than current stage, it will accelerate to the next stage with the acceleration time of next stage.

- Simple PLC control

  Simple PLC is an automatic running mode according to the preset acceleration / deceleration time, running frequency, running time and rotation direction. One cycle of simple PLC control is shown in the figure below.

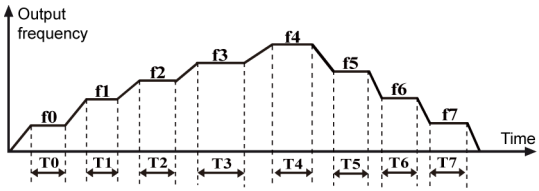

Fig.8-39: Simple PLC control

8 stages f0~f7 are set with parameters [b1.04], [E2.10]~[E2.16], and T0~T7 are set with parameters [E2.36], [E2.38], [E2.40], [E2.42], [E2.44], [E2.46], [E2.48] and [E2.50].

E2.30	Simple PLC running mode
Setting range	0 ~ 3
Minimum unit	1
Factory default	0

- 0: Inactive.

Simple PLC control is inactive.

- 1: Mode 1.

  Simple PLC stops after one cycle. When PLC is in this mode, after the last stage the frequency converter decelerates to 0.00 Hz and then a STOP signal is generated. The frequency converter stops as configured in stopping mode.

- 2: Mode 2.

  Simple PLC runs in cycle and stops when the stopping command is entered. When PLC is in this mode, after the last stage the frequency converter decelerates to 0.00 Hz and then starts from the beginning of the PLC cycle.

- 3: Mode 3.

  After one cycle, the frequency converter keeps running at the set frequency of the last stage.

E2.31	Simple PLC time multiple
Setting range	1 ~ 60
Minimum unit	1
Factory default	1

The actual running time of each stage=[Stage x running time] * [E2.31].

[Stage x running time] has a possible maximum value of 6000.0s, the PLC time multiplier [E2.31] has a maximum value of 60 and there are 8 possible stages (0-7), so the maximum duration of one PLC cycle calculates to: 8*6000.0s*60=800 hours.

E2.35	Stage 0 action selection
Setting range	011, 012, 013, 014, 021, 022, 023, 024, 031, 032, 033, 034, 041, 042, 043, 044, 111, 112, 113, 114, 121, 122, 123, 124, 131, 132, 133, 134, 141, 142, 143, 144
Minimum unit	1
Factory default	011
E2.36	**Stage 0 running time**
Setting range	0.0 ~ 6000.0s
Minimum unit	0.1s
Factory default	20.0s
E2.37	**Stage 1 action selection**
See "Stage 0 action selection"	
E2.38	**Stage 1 running time**
See "Stage 0 running time"	
E2.39	**Stage 2 action selection**
See "Stage 0 action selection"	
E2.40	**Stage 2 running time**

Parameter Settings

Stage 0 running time	
E2.41	**Stage 3 action selection**
See "Stage 0 action selection"	
E2.42	**Stage 3 running time**
Stage 0 running time	
E2.43	**Stage 4 action selection**
See "Stage 0 action selection"	
E2.44	**Stage 4 running time**
Stage 0 running time	
E2.45	**Stage 5 action selection**
See "Stage 0 action selection"	
E2.46	**Stage 5 running time**
Stage 0 running time	
E2.47	**Stage 6 action selection**
See "Stage 0 action selection"	
E2.48	**Stage 6 running time**
Stage 0 running time	
E2.49	**Stage 7 action selection**
See "Stage 0 action selection"	
E2.50	**Stage 7 running time**
Stage 0 running time	

Definition of stage x action selection is shown as below:

- Display 2 (left most):
  - 0: forward running
  - 1: reverse running
- Display 1:
  - 1: Acceleration time 1, set with function code [b1.20]
  - 2: Acceleration time 2, set with function code [E2.00]
  - 3: Acceleration time 3, set with function code [E2.02]
  - 4: Acceleration time 4, set with function code [E2.04]
- Display 0 (right most):
  - 1: Deceleration time 1, set with function code [b1.21]
  - 2: Deceleration time 2, set with function code [E2.01]
  - 3: Deceleration time 3, set with function code [E2.03]
  - 4: Deceleration time 4, set with function code [E2.05]

1. If the running time of a stage is set to be 0, simple PLC will skip this stage.
2. PID control mode has higher priority compared with Simple PLC control. That is, if the PID control mode is active, then Simple PLC control will be disabled internally. So, the precondition of running Simple PLC is to disable PID control.
3. PLC can be paused / prohibited by external terminals and PLC cycle / phase completion can be signalised by digital output. See more details in parameter [E0.01]~[E0.05] and [E1.00]~[E1.02].

Rotation direction command source differs if running command source is different, as shown in the table below:

Frequency source	RUN command source	Rotation direction	Acc. / Dec. time
Multi-speed	Via operating panel	Function codes: [E2.35], [E2.37], [E2.39], [E2.41], [E2.43], [E2.45], [E2.47], [E2.49]	Function codes: [E2.35], [E2.37], [E2.39], [E2.41], [E2.43], [E2.45], [E2.47], [E2.49]
	Via external terminals	External terminals, that is, 2-wire / 3-wire control mode	
	Via communication	Set by communication	
Simple PLC	Via operating panel	Function codes: [E2.35], [E2.37], [E2.39], [E2.41], [E2.43], [E2.45], [E2.47], [E2.49]	
	Via external terminals		
	Via communication		

Fig.8-4: Rotation direction and Acc. / Dec. for multi-speed / Simple PLC

8.9 Group E3: PID Control

PID control is a common approach used in process controls such as flow control, pressure control, temperature control and other process controls. Proportional, integral and derivative operations are based on the differences between reference values and their feedback, to adjust the output frequency of the frequency converter, form a negative feedback system, and keep the controlled values stable at reference values.

The basic control principle is shown as the figure below:

Parameter Settings

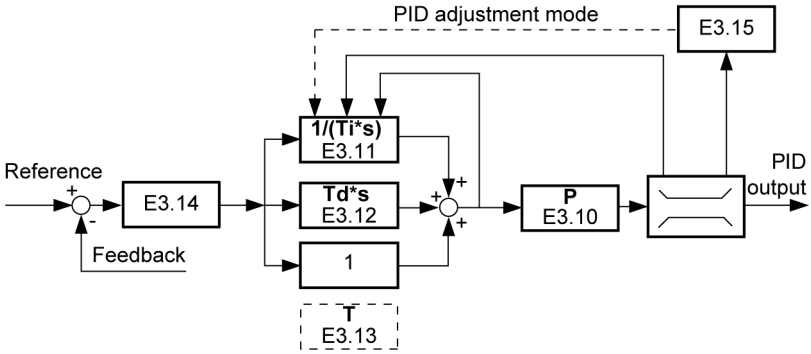

Fig.8-40: PID control principle

E3.00	PID reference channel
Setting range	0 ~ 7
Minimum unit	1
Factory default	0

- 0: No PID control
- 1: Panel potentiometer
- 2: Panel digital setting
- 3: Analog input voltage AIV

  When analog input voltage AIV is selected as the reference channel, the corresponding reference frequency is dependent on the parameter setting of [E0.10] and [E0.20] ~ [E0.28].
- 4 : Analog input current AIC

  When analog input current AIC is selected as the reference channel, the corresponding reference frequency is dependent on the parameter setting of [E0.12] and [E0.20] ~ [E0.28].
- 5: Communication
- 6: Analog digital setting [E3.03]
- 7: Rotation speed digital setting [E3.04]

E3.01	PID feedback channel
Setting range	0 ~ 1
Minimum unit	1
Factory default	0

- 0: Analog input current
- 1: Analog input voltage

Both of them have the nature of frequency, the corresponding reference frequency is related to [E0.10]~[E0.28].

E3.03	Analog digital setting
Setting range	0.00 ~ 10.00 V
Minimum unit	0.01 V
Factory default	0.00 V
E3.04	**Rotation speed digital setting**
Setting range	0 ~ 30000 rpm
Minimum unit	1 rpm
Factory default	0 rpm
E3.10	**P: Proportion gain**
Setting range	0.000 ~ 10.000
Minimum unit	0.001
Factory default	1.500
E3.11	**Ti: Integral time**
Setting range	0.00 ~ 100.00s (0.00 represents no integral)
Minimum unit	0.01s
Factory default	0.00s
E3.12	**Td: Derivative time**
Setting range	0.00 ~ 100.00s (0.00 represents no integral)
Minimum unit	0.01s
Factory default	0.00s
E3.13	**T: Sample period**
Setting range	0.01 ~ 100.00s
Minimum unit	0.01s
Factory default	0.50s

- P: Proportion gain
  - Decides the gain of deviation.
  - Larger P means larger scale and faster response, but too large P leads to oscillation.
  - P cannot eliminate deviation completely.
- Ti: Integral time
  - Used to eliminate the deviation

    Smaller Ti means faster response of frequency converter to deviation changes, but too small Ti leads to oscillation.
  - Special case: If Ti=0, I component is disabled.

If I component is disabled during PID control, it stops integration but keeps output at its current value (not cleared to zero); if I component is enabled again during PID operation, I component continues to work.

- Td: Derivative time
  - Used to respond fast to changes of deviation between reference and feedback in the system.

    Larger Td means faster response, but too large Td leads to oscillation.
  - Special case: If Td=0, D component is disabled.

    If D component is disabled during PID control, it stops derivative, the current value is cleared to zero.
- T: Sample period

  Sample period is the sampling time of the PID control. This value should match with the selected time constant of Ti or Td. Normally, the sampling period should be less than 1/5 of the time constant.

E3.14	Deviation width
Setting range	0.0 % ~ 20.0 % (closed loop reference value)
Minimum unit	0.1 %
Factory default	2.0 %

Used to set the limit of the deviation between reference and feedback signals to stop internal PID control and keep the output stable, provided the PID feedback deviation is within the range of [E3.14].

E3.15	PID regulation mode
Setting range	0 ~ 1
Minimum unit	1
Factory default	0

When the output value of closed loop regulation reaches the upper ([b1.06]) or lower ([b1.07]) limit of frequency, the integral mode has two action options:

- 0: Stop integral regulation

  The integral value remains unchanged. When the trend of reference values and feedback values changes, the integral value follow immediately the change in the trend. When the output reaches its frequency limit, the integration stops.
- 1: Continue integral regulation

  The integral value responds to the changes between reference and feedback values. When the output reaches the maximum frequency limit the integrator continues up to its possible numerical integration limit, not the maximum frequency limit.

  When the trend of reference and feedback values changes, more time is needed to eliminate the impact of continuous integral regulation before the integral value can follow the change in the trend.

8.10 Group E4: Error and Protection

E4.01	Overvoltage prevention setting
Setting range	0 ~ 2
Minimum unit	1
Factory default	0

- 0: Both disabled
- 1: Stall protection enabled, braking disabled
- 2: Stall protection disabled, braking enabled

When [E4.01]=0 / 1, the brake chopper will not work even its action point is reached.

When [E4.01]=2, the brake chopper is enabled with the set braking ratio if its action point is reached, no matter the frequency converter is in stop or running mode.

Two factors decide the switching pattern: Maximum duty cycle (duty ratio) and hysteresis voltage.

Maximum duty cycle

The switching time of the brake chopper is limited with parameter [S3.21]. If the value is set too low, over voltage errors may happen during braking.

- The time t2=1 / 100 Hz=10ms
- The time t1=t2 x [S3.21] / 100 %

  If the switching of the brake chopper is controlled by the maximum duty cycle, the switching pattern is shown as below:

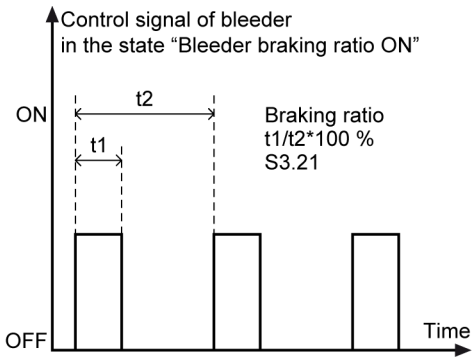

Fig.8-41: Switching pattern_Maximum duty cycle

Hysteresis Voltage

The hysteresis voltage of braking is fixed as below:

Parameter Settings

Model	Hysteresis voltage [V]
1P 200 V	10
3P 400 V	15

When the brake chopper is controlled by the hysteresis voltage, the switching pattern is shown as below:

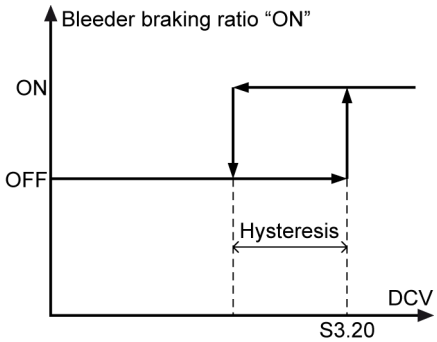

Fig.8-42: Switching pattern_Hysteresis voltage

When the duty cycle is set to 100 %, the switching will be only according to the hysteresis. It means that there is no switching after 10ms (100 Hz).

E4.02	Stall overvoltage prevention level
Setting range	200 V class: 300 ~ 390 V 400 V class: 600 ~ 885 V
Minimum unit	1 V
Factory default	200 V class: 390 V 400 V class: 885 V

With stall overvoltage protection, the frequency converter detects the DC bus voltage during deceleration and compares it with "Stall overvoltage prevention level" [E4.02].

- When the DC bus voltage exceeds the stall over voltage protection level, the output frequency stops decreasing.
- When the DC bus voltage is lower than the stall overvoltage protection level, the frequency converter resumes deceleration

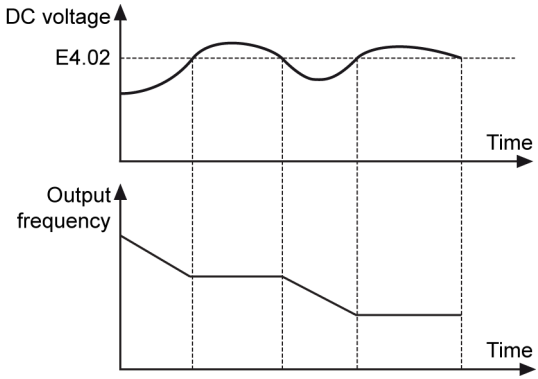

Fig.8-43: Stall overvoltage prevention level_during deceleration

Too low settings of this parameter may not bring a successful motor deceleration.

E4.03	Stall overcurrent prevention level
Setting range	20.0 % ~ 250.0 % (Rated frequency converter output current)
Minimum unit	0.1 %
Factory default	200.0 %

Used to prevent the motor from stalling due to the heavy load or too short acceleration time. This function is always available during acceleration and at constant speed.

During acceleration

- When the output current of the frequency converter is larger than the stall overcurrent prevention level [E4.03] during acceleration, the output frequency increasing will be stopped.
- When the current is lower than [E4.03], the acceleration resumes.

This function action will lead to longer acceleration time than settings.

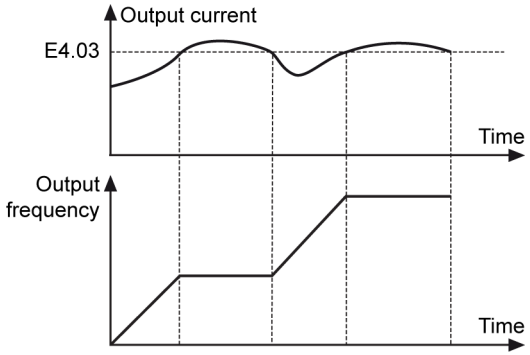

Fig.8-44: Stall overcurrent prevention level_during acceleration

At constant speed

- When the output current exceeds the stall prevention level set in [E4.03], the frequency converter starts deceleration with the defined deceleration time.
- When the output current drops below the value of [E4.03], the frequency converter accelerates to the set frequency with the defined acceleration time.

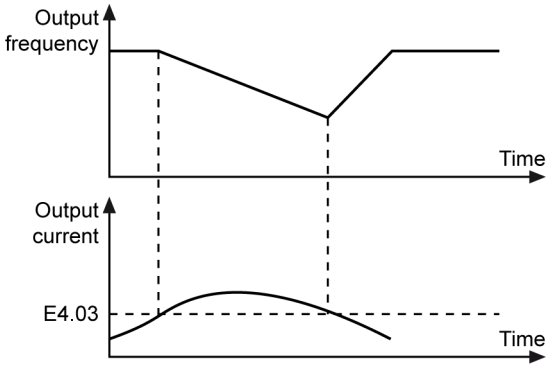

Fig.8-45: Stall overcurrent prevention level_at constant speed

E4.04	Low speed derating frequency
Setting range	0.10 ~ 300.00 Hz
Minimum unit	0.01 Hz
Factory default	25.00 Hz
E4.05	**Zero speed load**
Setting range	25.0 % ~ 100.0 %

Minimum unit	0.1 %
Factory default	25.0 %

- "Low speed derating frequency" means that when the frequency is higher than [E4.04], the allowed continuous current is the rated current [S2.04]. When the frequency is lower than [E4.04], the allowed continuous current is linear reduced to zero speed load [S2.23] at standstill.
- "Zero speed load" means the allowed continuous current (percent of rated current) at standstill.

At low speed, the cooling of most motors may get worse, so the allowed continuous current is getting lower. In this case, the allowed time for overload is getting shorter. For a motor with external cooling, zero speed load [E4.05] is set to 100 %, and the low speed derating is switched off.

Example:

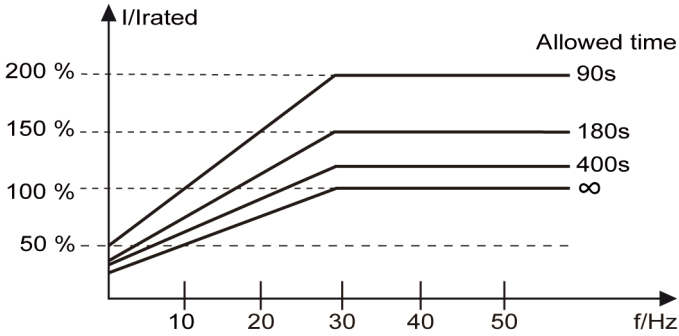

Fig.8-46: Low speed derating frequency and zero speed load

With:

- Low speed derating frequency [E4.04]=30 Hz
- Zero speed load [E4.05]=25 %
- Thermal time constant [S2.23]=280s

E4.06	Phase loss protection
Setting range	0~3
Minimum unit	1
Factory default	3

- 0: Both input and output phase loss protection active
- 1: Only input phase loss protection active
- 2: Only output phase loss protection active
- 3: Both input and output phase loss protection inactive

Parameter Settings

When the input phase loss protection is active and the input phase loss error occurs, the panel displays “IPH.L”; When the output phase loss protection is active and the output phase loss error occurs, the panel displays “OPH.L”.

- An input phase loss can also be triggered by line voltage imbalance or main capacitors deterioration. The protection has no capability to detect the input phase loss in following circumstances:
  - No “RUN” command is present;
  - The output current is lower than ca. 30% of frequency converter rated current;
  - During motor deceleration.
- There will be a dead zone to detect output phase loss in the following cases:
  - the output frequency is lower than 1 Hz.
  - during DC braking.
  - during speed detection restarting.
  - during motor parameters auto-tuning.
  - wrong settings of [S2.04] "motor rated current".

E4.15	Number of fault reset attempts
Setting range	0 ~ 3
Minimum unit	1
Factory default	0
E4.16	**Interval between reset attempts**
Setting range	2 ~ 60s
Minimum unit	1s
Factory default	10s

Automatic fault reset function is used to ensure continuous running without human intervention in the case of occasional faults, such as overcurrent and overvoltage at start and in the run mode. This function can be activated by setting [E4.15] to a non-zero value.

When a fault occurs, the frequency converter stops the output and the related error code is displayed at the same time. The system remains in idle mode for delay time [E4.16]. Then the error will automatically be reset and a run command will be generated to restart the frequency converter. This sequence will be performed [E4.15] times in a row. If the error still exists, the frequency converter remains in idle mode and no longer performs automatic restart attempts. In this case, a manual error reset is required to resume the operation.

Automatic fault reset is valid for the following faults: OC-1, OC-2, OC-3, OE-1, OE-2, OE-3, OE-4, OL-1, OL-2, UE-1, E-St, OH and UH.

E4.20	Last fault type
Setting range	0 ~ 51
Minimum unit	1
Factory default	0
E4.21	**2nd last fault type**
Setting range	0 ~ 51
Minimum unit	1
Factory default	0
E4.22	**3rd last fault type**
Setting range	0 ~ 51
Minimum unit	1
Factory default	0

Used to record the recent three faults which can be viewed after reset. For fault types, please refer to chapter 9.5.1 "Error Description and Solution" on page 128.

E4.30	Output frequency at latest fault
Setting range	0.00 ~ [b1.05]
E4.31	**Setting frequency at latest fault**
Setting range	0.00 ~ [b1.05]
E4.32	**Output current at latest fault**
Setting range	0.0 ~ 1000.0
E4.33	**Output voltage at latest fault**
Setting range	0 ~ 1000 V
E4.34	**DC bus voltage at latest fault**
Setting range	0 ~ 1000 V
E4.35	**Module temperature at latest fault**

☞ Parameters [E4.30] ~ [E4.35] are read only. To clear the faults records, refer to parameter [b0.05] "Parameter initialization".

8.11 Group H0: Communication

H0.00	Communication protocol
Setting range	0
Minimum unit	1
Factory default	0

- [H0.00]=0: ModBus

See chapter 13 "Communication Protocols" on page 172.

H0.01	Baud rate
Setting range	0 ~ 5
Minimum unit	1
Factory default	3

Used to select data transmission rate between the external computer and the frequency converter. Available baud rate includes:

- 0: 1200 bps
- 1: 2400 bps
- 2: 4800 bps
- 3: 9600 bps
- 4: 19200 bps
- 5: 38400 bps

H0.02	Data format
Setting range	0 ~ 3
Minimum unit	1
Factory default	0

Used to set data format in protocols.

- 0: N, 8, 1 (1 start place, 8 data places, 1 stop place, without check)
- 1: E, 8, 1 (1 start place, 8 data places, 1 stop place, even parity)
- 2: O, 8, 1 (1 start place, 8 data places, 1 stop place, odd parity)
- 3: N, 8, 2 (1 start place, 8 data places, 2 stop places, without check)

☞ The data format of the frequency converter must be the same as that of the external computer; otherwise, normal communication is impossible.

H0.03	Local address
Setting range	1 ~ 247
Minimum unit	1
Factory default	1

- In ModBus communication, the maximum number of frequency converters in the network is 247 (0 is broadcast address).

H0.08	Communication disruption detection time
Setting range	0.0 ~ 60.0s
Minimum unit	0.1s
Factory default	0.0s
H0.09	**Communication disruption action**
Setting range	0 ~ 1
Minimum unit	1
Factory default	1

When [H0.08]=0.0s, the disruption detection is disabled, otherwise the detection is enabled.

If the interval between the current communication and the next exceeds the time defined in [H0.08], a communication error / warning is reported and the action is defined by [H0.09]:

- 0: The motor freewheels to stop ([b1.40] stopping mode is inactive) after the communication timeout.
- 1: The motor continues running at the set frequency. For error / waring message, see chapter 9 "Diagnosis" on page 124.

9 Diagnosis

9.1 Diagnosis Messages when Booting the Device

Displayed message	Diagnosis
8.8.8.8.	This message will show up once the power is on, which detects the operating panel.
P.oFF	This message will show up when there is something wrong with the start-up (supply voltage is too weak or with defective softstart resistor), and the relay will not be switched on.
ESS-	This message will show up when the input voltage is too low and not stable at startup.
OE-4	This message will show up when the input voltage is too high at startup.
FFE-	This message shows up when there is a firmware mismatching problem after successful startup. For possible reasons and solutions, please see chapter 9.5 "Diagnosis on Errors" on page 128.
"Monitoring parameter"	Monitoring parameters will be displayed on panel after a successful start-up, which are decided by [b0.30] and [b0.31].

9.2 Diagnosis on Parameter Operation

9.2.1 Parameter Groups

EFC 3600 is designed with 5 parameter groups which are b group "Basic Parameters", S group "Standard Parameters", E group "Extended Parameters", H0 group "Communication Parameters" and d0 group "Monitoring Parameters".

Different groups can be accessed depending on different settings of [b0.02], as shown below:

b0.02 settings	Parameter groups can be assessed
0	b
1	b, S
2	b, S, E
3	b, S, E, H
4	b, Start-up mode parameters

Diagnosis on each parameter group is shown as below:

Parameter group	Displayed level 1	Displayed level 2	Description
Group b (b0 and b1)	-b0-	b0.00~b0.40	Each group has many sub-menus. For details of each parameter, please see chapter 8 "Parameter Settings" on page 53.
	-b1-	b1.00~b1.45	
Group S (S0, S2 and S3)	-S0-	S0.00~S0.33	
	-S2-	S2.00~S2.23	
	-S3-	S3.00~S3.35	
Group E (E0, E1, E2, E3 and E4)	-E0-	E0.00~E0.28	
	-E1-	E1.00~E1.32	
	-E2-	E2.00~E2.50	
	-E3-	E3.00~E3.15	
	-E4-	E4.01~E4.35	
Group H0	H0	H0.00~H0.09	
Group d0	d0	d0.00~d0.20	

☞ Press **RUN** key, the frequency converter will display the monitoring parameters according to [b0.30] "Running monitoring display".

9.2.2 Parameter Backup

For EFC 3600, all user parameter settings can be saved as backup to and read out from the operating panel.

Displayed message	Diagnosis
"-""--""---""----"	During backup…
[b0.20]	Backup completed
EEPr	Backup failed

9.2.3 Password

EFC 3600 provides the possibility to protect parameter values against accidental or unauthorized change by means of a password.

- If the user password [b0.00]=0, the user password protection is inactive, all user parameters can be read and modified.
- If the user password [b0.00]≠0, the user password protection is active, all the user parameters are read-only.

9.3 Diagnosis for Power Down/Drop

9.3.1 In Stop State

Displayed message
P.oFF

If the DC bus voltage drops down below a certain value under the following two situations, the messages above will show up:

1. Normal power down: this will cause DC bus voltage down below the undervoltage threshold along with this message.
2. Sudden power drop: this will cause that DC bus voltage drops at first down below the undervoltage threshold along with this message but then recovers before CPU voltage dropped to power down level, soft restart will be activated again and this message will be reset automatically.

9.3.2 In Run State

Displayed message
UE-1

If the DC bus voltage drops down below a certain value under the following two situations, the messages above will show up:

1. Normal power down: this will cause DC bus voltage down below the undervoltage threshold along with this message.
2. Sudden power drop: this will cause that DC bus voltage drops at first down below the undervoltage threshold along with this message but then recovers before CPU voltage dropped to power down level, soft restart will be activated again and this message will be reset automatically.

9.4 Diagnosis on Warnings

EFC 3600 has totally 4 kinds of warning messages as shown in the table below:

Displayed message	Diagnosis
PrSE	If any contradiction exists in parameter settings, the set value is invalid and this message will show up. After 1.5s, the previous data will be displayed.
S.Err	This message will show up if the user tries to change a parameter which is read-only or protected by a password in **RUN** state. After 1.5s, the previous data will be displayed.
P.oFF	As described above, this message will show up only when power down/ drop happens in **STOP** state.
C-dr	This message will show up if communication disruption timeout exceeds the value defined in [H0.08] when [H0.09] "Communication disruption action" is set to "1: continues running".

☞ All warnings will not cause automatic shutdown.

9.5 Diagnosis on Errors

9.5.1 Error Description and Solution

When EFC 3600 detects a status or situation that affects or prevents correct operation, an error message will be generated, as shown below:

Error code	Error name	Possible reason	Solution
OC-1	Over current at constant speed	Sudden change in run mode	Reduce occurrence and scale of sudden change
		Low mains voltage	Check the input power supply
		Motor power and frequency converter power do not match	Motor power has to match with frequency converter power
		Too large inertia or load	Check motor power, converter power, load
		The motor cable is too long	• Decrease the carrier frequency • Select a larger frequency converter
		Excessive torque compensation	• Check the amount of voltage boost • Reduce the amount of voltage boost until the current becomes less

Error code	Error name	Possible reason	Solution
OC-2	Overcurrent during acceleration	The acceleration time is too short	Increase the acceleration time
		Too large start frequency	Reduce the start frequency
		Too large load rotation inertia, too large impact load	Increase the acceleration time, reduce sudden load change
		Running command applied while motor is coasting	Restart after motor stop, or start with tracing speed ([b1.30]=2)
		Improper V/F curve setting	Adjust V/F curve
		Motor power and frequency converter power do not match	Motor power has to match with frequency converter power
		Excessive torque compensation	• Check the amount of voltage boost • Reduce the amount of voltage boost until the current becomes less
		Improper motor parameter setting	Set correct motor parameters
OC-3	Overcurrent during deceleration	The deceleration time is too short	Increase the deceleration time
		Too large load rotation inertia	Use suitable brake component
		Motor power and frequency converter power do not match	Motor power has to match with frequency converter power
		Over excitation	Reduce [b1.45]
		Improper motor parameter setting	Set correct motor parameters
OE-1	Overvoltage at constant speed	Surge voltage from the power supply	Check the input power supply
		Motor to earth short circuit causes DC bus capacitors to be overcharged	Check the motor connection
		Too large load rotation inertia	Use suitable brake component
		Noise interference	Check the wiring of control circuit, main circuit and ground

Diagnosis

Error code	Error name	Possible reason	Solution
OE-2	Overvoltage during acceleration	Surge voltage from the power supply	Check the input power supply
		Motor to earth short circuit causes DC bus capacitors to be overcharged	Check the motor connection
		Direct start during motor running	Restart after motor stop, or start with tracing speed ([b1.30])
		Too short acceleration time	Increase the acceleration time ([b1.20]) or use S-curve ([b1.22]~[b1.24])
OE-3	Overvoltage during deceleration	Surge voltage from the power supply	Check the input power supply
		Motor to earth short circuit causes DC bus capacitors to be overcharged	Check the motor connection
		Too large load rotation inertia	Use suitable brake component
		Too short deceleration time	• Increase the deceleration time ([b1.21]) • Use a brake resistor or a dynamic brake resistor unit • Enable stall overvoltage prevention during deceleration ([E4.01]=1)
		Incorrect wiring of brake resistor	Check the wiring according to the manual
		The brake chopper is damaged	Replace the frequency converter

Error code	Error name	Possible reason	Solution
OL-1	Converter overload	Long time over load	Reduce over load time, reduce load
		Too large proportion of V/F curve	Adjust V/F proportion and torque increase settings
		Motor power and frequency converter power do not match	Motor power has to match with frequency converter power
		Overload happens in case of lower speed	• Reduce the load in case of lower speed • Lower the carrier frequency ([b0.21]) • Increase the frequency converter capacity
		Too large load, too short acceleration/deceleration time or cycle	• Adjust the load, acceleration/deceleration time or cycle • Increase the frequency converter capacity
		Low mains voltage	Check the input power supply
		Too much torque boost setting	Decrease the value of [S0.21]

Diagnosis

Error code	Error name	Possible reason	Solution
OL-2	Motor overload	Motor locked	Prevent motor lock
		Normal motor runs long time with large load at low speed	• Increase frequency converter output frequency ([b1.04] or potentiometer) • Reduce load • Use variable frequency motor or set zero speed load ([E4.05]) to a higher value • Set correct thermal motor time constant ([S2.23])
		Low mains voltage	Check the input power supply
		Too large proportion of V/F curve	Adjust V/F proportion and torque increases
		Too large sudden load change	Check load
		Wrong input of motor rated current	Set correct motor rated current to [S2.04]
		Multiple motors are running under same frequency converter	Do not connect more than one motor to the frequency converter
		Over excitation	Reduce [b1.45]
EEP-	Flash read/ write error	Flash memory in a bad condition	Try to backup the data from the operating panel, and then replace the frequency converter
SPI-	SPI communication problem	EMC problem on the main board	Check the wiring of control circuit, main circuit and ground to find out the source of interference
		Internal error on I/O board	Remove the EMC problem, if it happens again, replace the frequency converter

Error code	Error name	Possible reason	Solution
E-St	External fault	External fault caused by input signals via external terminals	Check external terminal status, check respective reason to fault
		Wrong wiring/ setting of multi-function external terminals	Ensure the right external signals have been connected correctly to the right multi-function external terminals which are assigned for external fault input ([E0.01]~[E0.05]=19,20)
RS-	External communication error	Device connection problem	Check device communication connection
		Improper baud rate setting	Set proper baud rate
CF	Circuit fault (from current detection)	The offset is out of range due to EMC or defect of current detection	• Remove the EMC problem If it fails again, replace the frequency converter
OT	Motor over temperature	Motor over heat	• Provide a better cooling condition • Check the load
		Temperature sensor defect	Replace the motor
		Improper protection level	Different motor with different maximum temperature, configure the external division circuit and choose protection level [S2.22]
CPUd	Main board CPU trap error	CPU is disturbed by external noise and program run to illegal address	Check the wiring of control circuit, main circuit and ground to find out the source of interference

Diagnosis

Error code	Error name	Possible reason	Solution
SC	Short circuit	Internal fault of IGBT	Replace the frequency converter
		External short circuit of motor phase-phase	Check the motor
		Earth surge	Remove the short circuit and check the motor
IPHL	Input phase loss (for 3 phase frequency converter)	Abnormal, omitted or broken connection of frequency converter power supply	Follow operating procedures to check power supply connections, remove omitted or broken connection
		Broken fuse	Check fuse
		Imbalance in the three phases of input power supply	Check if the imbalance situation exceeds requirements
		Main circuit capacitor deterioration	Replace the frequency converter
OPHL	Output phase loss	Abnormal, omitted or broken connection of frequency converter outputs	Check the connections of frequency converter outputs, remove omitted or broken connections
		Imbalance in the three phases of outputs	Check the motor
OH	Frequency converter over temperature	Frequency converter (heat sink) temperature is higher than max allowable temperature 85°C	• Reduce ambient temperature, improve ventilation and heat dissipation; clear dust, cotton wadding in air ducts; check fan and its power supply connection (if available) • Reduce the load if it is too heavy • Reduce the carrier frequency [b0.21]
		Temperature detection circuit fault	Replace the frequency converter

Error code	Error name	Possible reason	Solution
CPUC	I/O board trap error	CPU fatal error on I/O board	• Check the wiring of control circuit, main circuit and ground to find out the source of interference • If it happens again, replace the frequency converter
CPUE	Removable panel trap error	CPU fatal on operating panel	• Check the wiring of control circuit, main circuit and ground to find out the source of interference • If it happens again, replace the frequency converter
CE3-	SPI problem between removable panel board and I/O board	Problem with operating panel	• Check the wiring of control circuit, main circuit and ground to find out the source of interference • If it happens again, replace the operating panel or the frequency converter
CE4-	Internal problem on operating panel	Problem with operating panel	• Check the wiring of control circuit, main circuit and ground to find out the source of interference • If it happens again, replace the operating panel or the frequency converter
FFE-	Firmware does not match	operating panel may be placed to the frequency converter with older/newer firmware	Contact with technical service
		I/O board may be removed to anther device	Contact with technical service

Diagnosis

Error code	Error name	Possible reason	Solution
PSr-	Problem with power supply on the main board	10 V overload situations on I/O board	Remove the overload situation
		EMC problems at customer I/O interface	Remove the environmental interference or EMI
		Internal problem	• Check the wiring of control circuit, main circuit and ground to find out the source of interference • Replace the frequency converter
EEPr	EEPROM error on operating panel	Power failure while write / read	Parameter initialization
		If error happens at normal power on, problems with operating panel	Replace the operating panel
		Parameter compatibility because firmware update	Should be solved during development
ESS-	Soft start error	Soft start resistor value has been changed due to high over temperature	Replace the frequency converter
		Mains input is unstable	Check the input power supply
		Mains input is weak	Increase the power capacity
		An input phase loss during start up (3 phase)	Remove the input phase loss situation
		Main circuit capacitor deterioration	Replace the frequency converter
CE5-	Internal problem on main board	Problem with CPU on main board	• Check the wiring • If it fails again, contact with technical service

Error code	Error name	Possible reason	Solution
UE-1	Undervoltage during run	Power failure during running	Check the input power supply
		Main circuit capacitor deterioration	Replace the frequency converter
UH	Frequency converter under temperature	Ambient temperature is lower than -15°C	• Check the surrounding temperature of the frequency converter • Provide a reasonable ambient temperature that frequency converter requires
		Defect of temperature sensor	Replace the frequency converter
FHE-	Manufacturer parameter defect or dismatch to hardware	Parameter corruption	Contact with technical service
CE7-	15 V Power supply error	Internal circuit failure	Contact with technical service
		EMC problem	Remove the environmental interference or EMI
dir1	Rotation direction error 1	Parameter [b1.10], direction control=1, forward only. Direction command is reverse	Set the parameter correctly
dir2	Rotation direction error 2	Parameter [b1.10], direction control=2, reverse only. Direction command is forward	Set the parameter correctly

Diagnosis

Error code	Error name	Possible reason	Solution
CE8-	Communication problem on I/O board (No communication frames received from I/O board)	EMC problem	Remove the environmental interference or EMI
		Defect on I/O board	Replace the I/O board or drive
CE0-	Communication problem on main board (The communication frames received from main board are checksum erroneous)	EMC problem	Remove the environmental interference or EMI
		Defect on main board	Replace the frequency converter
CE1-	Communication problem on operating panel (The communication frames received from removable panel are checksum erroneous)	EMC problem	Remove the environmental interference or EMI
		Defect on removable board	Replace the removable board or frequency converter

Error code	Error name	Possible reason	Solution
CE2-	Communication problem on main board (There is no communication data from main board received in general)	EMC problem	Remove the environmental interference or EMI
		Defect on main board	Replace the frequency converter
CE6-	Communication problem on removable board (There is no communication data from removable received in general)	EMC problem	Remove the environmental interference or EMI
		Defect on removable board	Replace the removable board or frequency converter
CE9-	Firmware version error	Firmware version of I/O board does not match with others in the system	Contact with technical service
OE-4	Overvoltage during stop	Power supply voltage is too high	Check the input power supply
		Surge voltage from the power supply	Check the input power supply
		Noise interference	• Check the wiring of control circuit, main circuit and ground to find out the source of interference • Too much inertia on the load

Fig.9-1: Error description and solution

☞ Parameter initialization will reset all parameter settings to factory defaults. Please backup necessary data before this operation.

9.5.2 Error Reactions of the Frequency Converter

If an error happens in running state, the frequency converter has to perform a suitable error reaction. For general errors, the frequency converter will freewheel to stop. Some errors may be associated with special error reaction (e.g. communication error), which are configurable. If a configurable error reaction is set to "ignore error", then the error is neither displayed nor stored in the error memory.

9.5.3 Clearing an Error Message

An error message can be cleared by the following actions:

- Press the **STOP** button.
- Activate the digital I/O terminal configured as "external fault reset".

☞ All other buttons or run commands from external sources are ignored before the error is reset. After reset, the display returns to the state before the error occurred.

9.5.4 Error Memory

Several diagnostic messages of errors are written to the error memory. 3 recent errors are stored in [E4.20]~[E4.22]. The latest error is always stored in [E4.20] , and the previous error codes are shifted one place back in the FIFO. The oldest error (value of [E4.22] before the new error occurred) will be shifted out of the FIFO and is lost. System status at latest fault are recorded in [E4.30]~[E4.35].

9.5.5 Automatic Fault Reset

An automatic fault reset mechanism can be configured by setting [E4.15] to a non-zero value. If an error occurs, the normal error reaction and diagnosis is performed as described above. After the frequency converter has stopped the P.M. output, the system will remain in idle mode for the delay time [E4.16]. Then the error will automatically be reset and a run command will be generated to restart the frequency converter. This sequence will be performed [E4.15] times in a row. If the error still exists, the frequency converter remains in idle mode and no longer performs automatic restart attempts. A manual reset is required to resume the operation.

If a manual error reset (via STOP button or I/O terminal, see above) is requested while the error is displayed during the automatic fault reset sequence (during the delay time between a fault and the automatic restart attempt), the sequence will be interrupted and the error is reset. The frequency converter remains in idle mode and no longer performs automatic restart attempts.

If the frequency converter is successfully restarted, then the number of automatic restart attempts will be reset to [E4.15].

10 Technical Data

10.1 General Technical Data

Input	
Power supply voltage	1 AC 200 ~ 240 V (-10 % / +10 %) 3 AC 380 ~ 480 V (-15 % / +10 %)
Power supply frequency	50 ~ 60 Hz (±5 %)
Output	
Rated output voltage	Corresponding to input voltage
Rated power	0.4 ~ 2.2 kW (1P AC 200 ~ 240 V) 0.4 ~ 4.0 kW (3P AC 380 ~ 480 V)
Output frequency	0 ~ 400 Hz
Switching frequency	1 ~ 15 kHz
Frequency converter efficiency	>95%
Overload capability	150 % of rated current for 60s, and then 100 % of rated current for 540s 200 % of rated current for 1s, and then 100% of rated current for 19s
Main functions	
Control mode	V/F control
V/F curve	Linear mode, square curve mode, user-defined multi-point curve mode
Speed regulation range	1:50
Start-up torque	150 % * rated torque at 3 Hz 100 % * rated torque at 1.5 kHz
Frequency resolution	Analog setting: 1/1000 of max. frequency Digital setting: 0.01 Hz
Frequency control accuracy	Analog setting: ±0.1 % of max. frequency (25 ± 10 ℃) Digital setting: ±0.01 % of max. frequency (-10 ~ 50 ℃)
Multiple speed control	Via simple PLC or control terminals
Acceleration/deceleration curve mode	Linear, S-curve
DC brake	DC brake activation frequency: 0 ~ 50 Hz DC brake time: 0 ~ 20s

Technical Data

Status messages via multi-function output signal	Frequency converter in running, frequency converter for running, DC braking indication, frequency converter running at zero speed, FDT1/FDT2, frequency/velocity arrival signal, undervoltage blockage stopped, motor/ frequency converter overload pre-warning, external fault stop, error output, target/middle count value arrived, simple PLC phase/cycle completion indication
Main control functions	Automatic PWM frequency adaptation, main and auxiliary reference, slip compensation, torque boost, automatic voltage stabilization selection, DC brake, restarting after power fault immediately, intelligent fan control, 2-wire/3-wire control, quick startup, parameter copy, PID control, multi-speed control, no-trip control, etc.
Customized functions	
Control commands	Set by operating panel, control terminals and communication
Frequency setting	Set by digital operating panel, analog voltage, analog current, communication, potentiometer, simple PLC and output of PID, which can be switched anytime
Auxiliary frequency setting	Flexible frequency trimming and frequency synthesis, etc.
Analog output terminal	Analog output, 0/ 2 ~ 10 V, to output running frequency, set frequency, output current, output power, output voltage, analog input voltage and analog input current
Communication	
Communication protocol	ModBus
Communication interface	RS485
Operating panel	
7-Segment display	Displaying of various parameters, including output rotation speed, output frequency, set frequency, set rotation speed, output voltage, output current, output power, analog input, DC bus voltage, analog output, digital input status, user-defined set frequency, user-defined output frequency, PID target engineering value, PID feedback engineering value, module temperature, actual carrier frequency, firmware version, etc.
LED indicator	Showing setting direction, **RUN** status
Protection	
Short circuit between phase protection, ground fault protection, overload protection, overvoltage protection, undervoltage protection, motor/frequency converter thermal protection, intelligent overload protection (reduce carrier frequency at O.H.), stall prevention, etc.	

Optional parts	
Brake resistor, input choke, output filter, communication cable for cabinet control, etc.	
Environment	
Power reduction/Maximum installation height	Up to 1000m above sea level: none 1000 ~ 4000m above sea level: 1 % / 100m
Ambient temperature	-10 ~ 50 ℃ (Operating) -20 ~ 60 ℃ (Storage)
Relative humidity	< 90 % RH (Without condensation)
Shocking	1g (< 20 Hz) 6g (20 ~ 50 Hz)
Allowed pollution degree	2 (EN 50178)
Construction	
Degrees of protection	IP20 (Mounting on the metal wall in control cabinet)
Cooling type	Natural cooling (≤0.75 kW) Enforced air cooling (>0.75 kW)
Standards and Certifications	
CE; UL (in progress)	
Mounting mode	
Wall mounting	

Fig.10-1: General technical data

10.2 Electrical Parameter

1-phase 200 V series					
Model EFC 3600-□□□□-1P2-MDA-7P-NNNN	0K40	0K75	1K50	2K20	–
Power class [kW]	0.4	0.75	1.5	2.2	–
Rated input current [A]	5.8	9.6	15.0	19.7	–
200 V rated output current [A]	2.3	3.9	7.0	9.7	–
240 V rated output current [A]	1.9	3.3	5.8	8.1	–
Rated output apparent power [kVA]	0.8	1.4	2.4	3.4	–
3-phase 400 V series					
Model EFC 3600-□□□□-3P4-MDA-7P-NNNN	0K40	0K75	1K50	2K20	4K00
Power class [kW]	0.4	0.75	1.5	2.2	4.0
Rated input current [A]	1.3	2.3	3.9	5.6	9.8
380 V rated output current [A]	1.2	2.1	3.7	5.1	8.8
480 V rated output current [A]	1.0	1.6	2.9	4.0	7.0
Rated output apparent power [kVA]	0.8	1.4	2.4	3.4	5.8

Fig.10-2: Electrical parameter

☞ □□□□: is a substitute for different power.

- i.e. 0K40 means 0.4 kW.

10.3 Derating of Electrical Data

10.3.1 Derating and Ambient Temperature

The ambient temperature for EFC 3600 is -10 ~ 50 °C.

- If the ambient temperature is within this range, there will be no need for derating.
- If the ambient temperature is out of this range, there will be no possibility to install and run the frequency converter, even the performance data have been additionally reduced.

☞ For a single phase 2.2 kW model, 10 % of load needs to be reduced for every 5 °C temperature increase when the frequency converter is working at 40 ~ 50 °C.

10.3.2 Derating and Mains Voltage

Reduced over current based on mains voltage

The EFC 3600 frequency converters are thermally dimensioned for the rated currents. This rated current is available with the specified rated voltage. With deviating voltages in the permissible range, please pay attention to the following:

- $U_{mains}<U_{rated}$: With mains voltages below the rated voltage, no higher currents may be withdrawn to ensure that the dissipated power remains current.
- $U_{mains}>U_{rated}$: With mains voltages greater than the rated voltage, a reduction of the permissible output permanent currents takes place to compensate for the increased switching losses.

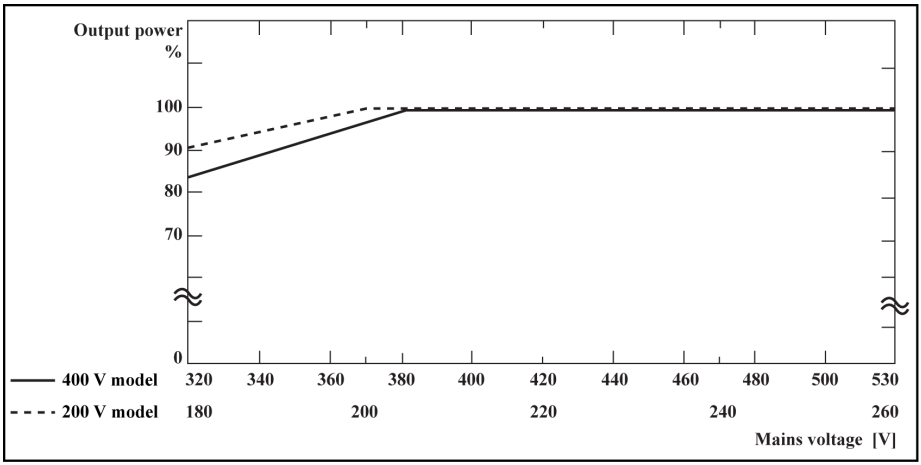

Fig.10-1: Derating and mains voltage

- 400 V model: at mains voltage < 380 V: 1 % power derating every 4 V.
- 200 V model: at mains voltage < 200 V: 1 % power derating every 2 V.

10.3.3 Derating and Output Current

For the whole range of EFC 3600 from 0.4 ~ 4.0 kW, current derating based on pulse frequency is unnecessary.

11 Electromagnetic Compatibility (EMC)

11.1 EMC Requirements

11.1.1 General information

The electromagnetic compatibility (EMC) or electromagnetic interference (EMI) includes the following requirements:

- Sufficient noise immunity of an electric installation or an electric device against external electric, magnetic or electromagnetic interference via lines or through air.
- Sufficiently low noise emission of electric, magnetic or electromagnetic noise of an electric installation or an electric device to other surrounding devices via lines or through air.

11.1.2 Noise immunity in the drive system

Basic structure for noise immunity

The figure below illustrates the interference for definition of noise immunity requirements in the drive system.

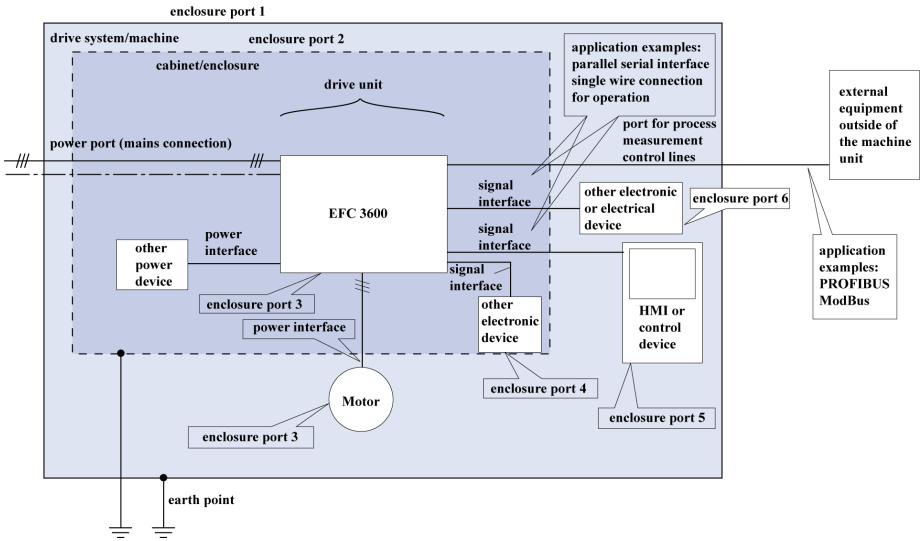

Fig.11-1: Noise immunity in the drive system

Minimum immunity requirements for PDSs intended for use in the second environment

Port	Phenomenon	Basic standard for test method	Level	Performance (acceptance) criterion
Enclosure port	ESD	IEC 61000-4-2	4 kV CD or 8 kV AD if CD impossible	B
	Radio-frequency electro-magnetic field, amplitude modulated	IEC 61000-4-3	80 to 1000 MHz 10 V/m 1.4 to 2.0 GHz 3 V/m 2.0 to 2.7 GHz 1 V/m 80 % AM (1 kHz)	A
Power ports	Fast transient-burst	IEC 61000-4-4	2 kV/5 kHz	B
	Surge 1.2/50 µs, 8/20 µs	IEC 61000-4-5	1 kV [a], 2 kV [b]	B
	Conducted radio-frequen-cy common mode	IEC 61000-4-6	0.15 MHz to 80 MHz 10 V 80 % AM (1 kHz)	A
Power interfaces	Fast transient-burst	IEC 61000-4-4	2 kV/5 kHz Capacitive clamp	B
Signal interfaces	Fast transient-burst	IEC 61000-4-4	1 kV/5 kHz Capacitive clamp	B
	Conducted radio-frequen-cy common mode	IEC 61000-4-6	0.15 MHz to 80 MHz 10 V 80 % AM (1 kHz)	A
Ports of process measurement control lines	Fast transient-burst	IEC 61000-4-4	2 kV/5 kHz Capacitive clamp	B
	Conducted radio-frequen-cy common mode	IEC 61000-4-6	0.15 MHz to 80 MHz 10 V 80 % AM (1 kHz)	A

Fig.11-1: Minimum immunity requirements for PDSs intended for use in the second environment

Minimum immunity requirements for PDSs intended for use in the first environment

Port	Phenomenon	Basic standard for test method	Level	Performance (acceptance) criterion
Enclosure port	ESD	IEC 61000-4-2	4 kV CD or 8 kV AD if CD impossible	B
	Radio-frequency electro-magnetic field, amplitude modulated	IEC 61000-4-3	80 – 1000 MHz 3 V/m 1.4 – 2.0 GHz 3 V/m 2.0 – 2.7 GHz 1 V/m 80% AM (1 kHz)	A
Power ports	Fast transient-burst	IEC 61000-4-4	1 kV/5 kHz	B
	Surge 1.2/50 µs, 8/20 µs	IEC 61000-4-5	1 kV [a], 2 kV [b]	B
	Conducted radio-frequen-cy common mode	IEC 61000-4-6	0.15 – 80 MHz 3 V 80 % AM (1 kHz)	A
Power interfaces	Fast transient-burst	IEC 61000-4-4	1 kV/5 kHz Capacitive clamp	B
Ports of process measurement control lines	Fast transient-burst	IEC 61000-4-4	0.5 kV/5 kHz Capacitive clamp	B
	Conducted radio-frequen-cy common mode	IEC 61000-4-6	0.15 – 80 MHz 3 V 80 % AM (1 kHz)	A

Fig.11-2: Minimum immunity requirements for PDSs intended for use in the first environment

- CD: Contact discharge.
- AD: Air discharge.
- AM: Amplitude modulation.
- [c]: Coupling line to line.
- [d]: Coupling line to earth.

Evaluation criterion

Evaluation criterion	Explanation (abbreviated form from EN 61800-3)
A	Deviations within allowed range
B	Automatic recovery after interference
C	Switched off without automatic recovery. Device remains undamaged

Fig.11-3: Evaluation criterion

11.1.3 Noise emission of the drive system

Causes of noise emission

Controlled variable-speed drives contain converters containing snappy semiconductors. The advantage of modifying the speed with high precision is achieved by means of pulse width modulation of the converter voltage. This can generate sinusoidal currents with variable amplitude and frequency in the motor.

cause unwanted but physically unavoidable emission of interference voltage and interference fields (wide band interference). The interference mainly is asymmetric interference against ground.

The propagation of this interference strongly depends on:

- configuration of the connected drives
- number of the connected drives
- conditions of mounting
- site of installation
- radiation conditions
- wiring and installation

If the interference gets from the device to the connected lines in unfiltered form, these lines can radiate the interference into the air (antenna effect). This applies to power lines, too.

Limit values for line-based disturbances

According to IEC EN 61800-3 or CISPR 11 (corresponds to EN 55011), the limit values in the table below are distinguished. For this documentation both standards are combined in the limit value classes A2.1 to B1.

IEC / EN 61800-3	CISPR 11	Explanation	In this document	Curves of limit value characteristic
Category C4 2nd environment	None	One of the following 3 requirements must have been fulfilled: • Mains connection current>400 A, IT mains or required dynamic drive behavior not reached by means of EMC filter. • Adjust limit values to use and operation on site. • User has to carry out and provide evidence of EMC planning.	None	–
Category C3 2nd environment	Class A; group 2, I>100 A	Limit value in industrial areas to be complied with for applications operated at supply mains with nominal currents>100 A	A2.1	1.1 1.2
Category C3 2nd environment	Class A; group 2, I≤100 A	Limit value in industrial areas to be complied with for applications operated at supply mains with nominal currents≤100 A	A2.2	2.1 2.2
Category C2 1st environment	Class A; group 1	Limit value in residential area or at facilities at low-voltage mains supplying buildings in residential areas to be complied with	A1	3.1 3.2
Category C1 1st environment	Class B; group 1	Limit value in residential areas to be complied with	B1	4.1 4.2

Fig.11-4: Limit values for line-based disturbances

Electromagnetic Compatibility (EMC)

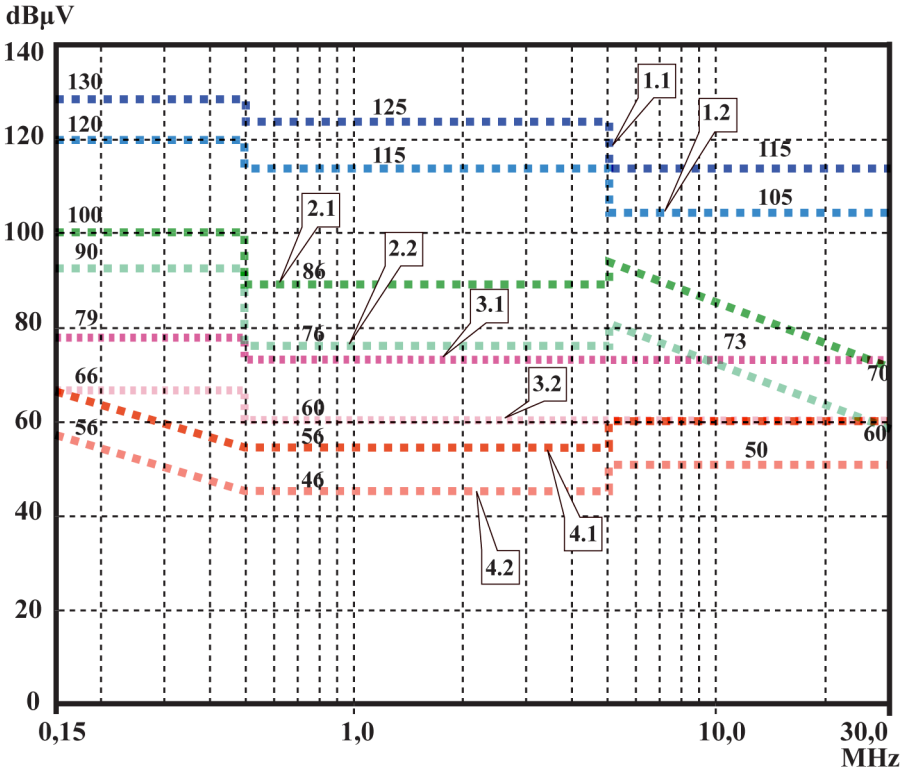

1.1 **C3**	2nd environment, QP, I>100 A (class A, group 2, I>100 A)	**1.2** **C3**	2nd environment, AV, I>100 A (class A, group 2, I>100 A)
2.1 **C3**	2nd environment, QP, I≤100 A (class A, group 2, I≤100 A)	**2.2** **C3**	2nd environment, AV, I≤100 A (class A, group 2, I≤100 A)
3.1 **C2**	1st environment, QP (1st environment, even if source of interference in 2nd environment) (class A, group 1)	**3.2** **C2**	1st environment, AV (1st environment, even if source of interference in 2nd environment) (class A, group 1)
4.1 **C1**	1st environment, QP (1st environment, even if source of interference in 2nd environment) (class B, group 1)	**4.2** **C1**	1st environment, AV (1st environment, even if source of interference in 2nd environment) (class B, group 1)

Fig.11-2: Limit values for line-based disturbances (IEC 61800-3); limit characteristic through frequency range

- Limit value for 1st environment is also relevant, if source of interference of 2nd environment affects 1st environment.
- Designations “class” and “group” according to CISPR 11.
- QP: measuring method quasi peak measurement.
- AV: measuring method arithmetic averaging.

Second Environment, Industrial Area

Facilities not directly connected to a low-voltage mains to supply buildings in residential areas.

If the limit values in an industrial area separated from public supply by a transformer station only have to be complied with at the property boundary or in the neighboring low-voltage mains, the filter might not be necessary. In the vicinity such as measuring sensors, measuring lines or measuring devices, it is normally required to use the interference suppression filter.

Increasing the noise immunity of a sensitive device can often be the economically better solution compared to measures of interference suppression at the drive system of installation.

First Environment

Environment containing residential areas and facilities directly connected, without interstage transformer, to a low-voltage mains supplying buildings in residential areas.

Medium-sized manufacturing plants and industrial establishments can be connected to the public low-voltage mains together with residential buildings. In this case there is a high risk for radio and television reception if there are not any measures for radio interference suppression taken. Therefore, the indicated measures are generally recommended.

Nominal Current of Supply Mains

The nominal current of the supply mains (> 100 A or ≤100 A) is specified by the local power supply company at the connection point of the mains. For industrial companies, for example, such connection points are the interconnecting stations from the power supply company.

Since it is impossible to obtain the lower limit values for residential areas with all applications by means of usual measures (like in the case of large and electrically not closed installations, longer motor cables or a large number of drives), the following note included in EN 61800-3 has to be observed.

According to IEC 61800-3, components of EFC 3600 drive system are products of

- category C3: with internal EMC filter
- category C1: with external EMC filter

EFC 3600 frequency converter with internal EMC filter is applicable to industrial environment (category C3). With installation of an external EMC filter, EFC 3600 can fulfill C1 requirements.

WARNING

In a domestic environment (category C1) EFC 3600 frequency converter with internal EMC filter may cause radio interference in which case supplementary mitigation measures may be required.

See the following chapters for the limit classes (as per categories C1, C2, C3, C4 according to EN 61800-3) which can be reached for Bosch Rexroth Frequency Converter EFC 3600.

11.2 Ensuring the EMC Requirements

Standards and laws

On the European level there are the EU Directives. In the EU states these Directives are transformed into laws valid on a national level. The relevant directive for EMC is EU Directive 2004/108/EC which was transformed on the national level in Germany into the law EMVG (“Law concerning electromagnetic compatibility of devices”) of 2008-02-26.

EMC Properties of Components

Drive and control components by Rexroth are designed and built, in accordance with the present state-of-the-art of standardization, according to legal regulations of the EU Directive EMC 2004/108/EC and the German law.

The compliance with EMC standards was tested by means of a typical arrangement with a test setup conforming to standard with the indicated internal and external EMC filters.

- Category C3 requirements according to product standard EN 61800-3 have been complied with for EFC 3600 with an internal EMC filter.
- Category C1 requirements according to product standard EN 61800-3 have been complied with for EFC 3600 with an external EMC filter.
- Minimum immunity requirements in the second environment according to product standard EN 61800-3 have been complied with for EFC 3600 with internal and external EMC filters.

Applicability for End Product

Measurements of the drive system with an arrangement typical for the system are not in all cases applicable to the status in a machine or installation. Noise immunity and noise emission strongly depend on:

- configuration of the connected drives
- number of the connected drives
- conditions of mounting
- site of installation
- radiation conditions
- wiring and installation

In addition, the required measures depend on the requirements of electric safety technology and economic efficiency in the application.

In order to prevent interference as far as possible, notes on mounting and installation are contained in the application manuals of the components and in this documentation.

Cases to Distinguish for Declaration of EMC Conformity

For validity of the harmonized standards, we distinguish the following cases:

- Case 1: Delivery of the drive system.

  According to the regulations, EFC 3600 drive system is complied with product standard EN 61800-3 C3 (with internal EMC filters) or EN 61800-3 C1 (with external EMC filters). The drive system is listed in the declaration of EMC conformity. This fulfills the legal requirements according to EMC directive.

- Case 2: Acceptance test of a machine or installation with the installed drive systems.

  The product standard for the respective type of machine/installation, if existing, applies to the acceptance test of the machine or installation. In the last years, some new product standards were created at present.

These new product standards contain references to the product standard EN 61800-3 for drives or specify higher-level requirements demanding increased filter and installation efforts. When the machine manufacturer wants to put the machine/installation into circulation, the product standard relevant to his machine/ installation has to be complied with for his end product “machine/installation”. The authorities and test laboratories responsible for EMC normally refer to this product standard.

This documentation specifies the EMC properties which can be achieved, in a machine or installation, with a drive system consisting of the standard components.

It also specifies the conditions under which the indicated EMC properties can be achieved.

11.3 EMC Measures for Design and Installation

11.3.1 Rules for design of installations with drive controllers in compliance with EMC

The following rules are the basics for designing and installing drives in compliance with EMC:

Mains Filter

Correctly use a mains filter recommended by Rexroth for radio interference suppression in the supply feeder of the drive system.

Control Cabinet Grounding

Connect all metal parts of the cabinet with one another over the largest possible surface area to establish a good electrical connection. This, too applies to the mounting of the external mains filter. If required, use serrated washers which cut through the paint surface. Connect the cabinet door to the control cabinet using the shortest possible grounding straps.

Line Routing

Avoid coupling routs between lines with high potential of noise and noise-free lines; therefore, signal, mains and motor lines and power cables have to be routed separately from another. Minimum distance: 10 cm. Provide separate DOK-RCON03-EFC3600****-IB01-EN-P Rexroth Frequency Converter EFC 3600 Bosch Rexroth AG 87/123 Technical Data sheets between power and signal lines. Ground separating sheets several times.

The lines with high potential of noise include:

- Lines at the mains connection (incl. synchronization connection)
- Lines at the motor connection
- Lines at the DC bus connection

Generally, interference injections are reduced by routing cables close to grounded sheet steel plates. For this reason, cables and wires should not be routed freely in the cabinet, but close to the cabinet housing or mounting panels. Separate the incoming and outgoing cables of the radio interference suppression filter.

Interference Suppression Elements

Provide the following components in the control cabinet with interference suppression combinations:

- Contactors
- Relays
- Solenoid valves
- Electromechanical operating hours counters

Connect these combinations directly at each coil.

Twisted Wires

Twist unshielded wires belonging to the same circuit (feeder and return cable) or keep the surface between feeder and return cable as small as possible. Wires that are not used have to be grounded at both ends.

Lines of Measuring Systems

Lines of measuring systems must be shielded. Connect the shield to ground at both ends and over the largest possible surface area. The shield may not be interrupted, e.g. using intermediate terminals.

Digital Signal Lines

Ground the shields of digital signal lines at both ends (transmitter **and** receiver) over the largest possible surface area and with low impedance. This avoids low frequency interference current (in the mains frequency range) on the shield.

Analog Signal Lines

Ground the shields of analog signal lines at one end (transmitter **or** receiver) over the largest possible surface area and with lower impedance. This avoids low frequency interference current (in the mains frequency range) on the shield.

Connection of Mains Choke

Keep connection lines of the mains choke at the drive controller as short as possible and twist them.

Installation of Motor Power Cable

- Use shield motor power cable or run motor power cables in a shielded duct;
- Use the shortest possible motor power cable;
- Ground shield of motor power cable at both ends over the largest possible surface area to establish a good electrical connection;
- It is recommended to run motor lines in shielded form inside the control cabinet;
- Do not use any steel-shielded lines;
- The shield of the motor power cable must not be interrupted by mounted components, such as output chokes, sine filter or motor filters.

11.3.2 EMC-optimal installation in facility and control cabinet

General Information

For EMC-optimal installation, a special separation of the interference-free area (mains connection) and the interference-susceptible area (drive components) is recommended, as shown in the figures below.

- For EMC-optimal installation in the control cabinet, use a separate control cabinet panel for the drive components.
- Frequency converters need to be mounted in metal cabinet and connected to power supply with grounding.
- For frequency converters with internal filter, 15 m shielded cable was used between the motor and frequency converter in the EMC test.
- For the end application system with frequency converters, the conformity of EMC directions needs to be confirmed.

Division into Areas (zones)

Exemplary arrangements in the control cabinet: See fig. 11-7 "Control cabinet mounting according to interference areas – exemplary arrangements" on page 159.

We distinguish three areas:

1. Interference-free area of control cabinet **(area A):**

   This includes:

   - Supply feeder, input terminals, fuse, main switch, mains side of mains filter for drives and corresponding connecting lines;
   - Control voltage or auxiliary voltage connection with power supply unit, fuse and other parts unless connection is run via the mains filter of the AC drives;
   - All components that are not electrically connected with the drive system.
2. Interference-susceptible area **(area B):**
   - Mains connections between drive system and mains filter for drives, mains contactor;
   - Interface lines of drive controller
3. Strongly interference-susceptible area **(area C):**
   - Motor power cables including single cores

Never run lines of one of these areas in parallel with lines of another area so that there is not any unwanted interference injection from one area to the other and that the filter is jumped with regard to high frequency. Use the shortest possible connecting lines.

Recommendation for complex systems: Install drive components in one cabinet and the control units in a second, separate cabinet.

Badly grounded control cabinet doors act as antennas. Therefore, connect the control cabinet doors to the cabinet on top, in the middle and on the bottom via short equipment grounding conductors with a cross section of at least 6 mm^2 or, even better, via grounding straps with the same cross section. Make sure connection points have good contact.

11.3.3 Control cabinet mounting according to interference areas – exemplary arrangements

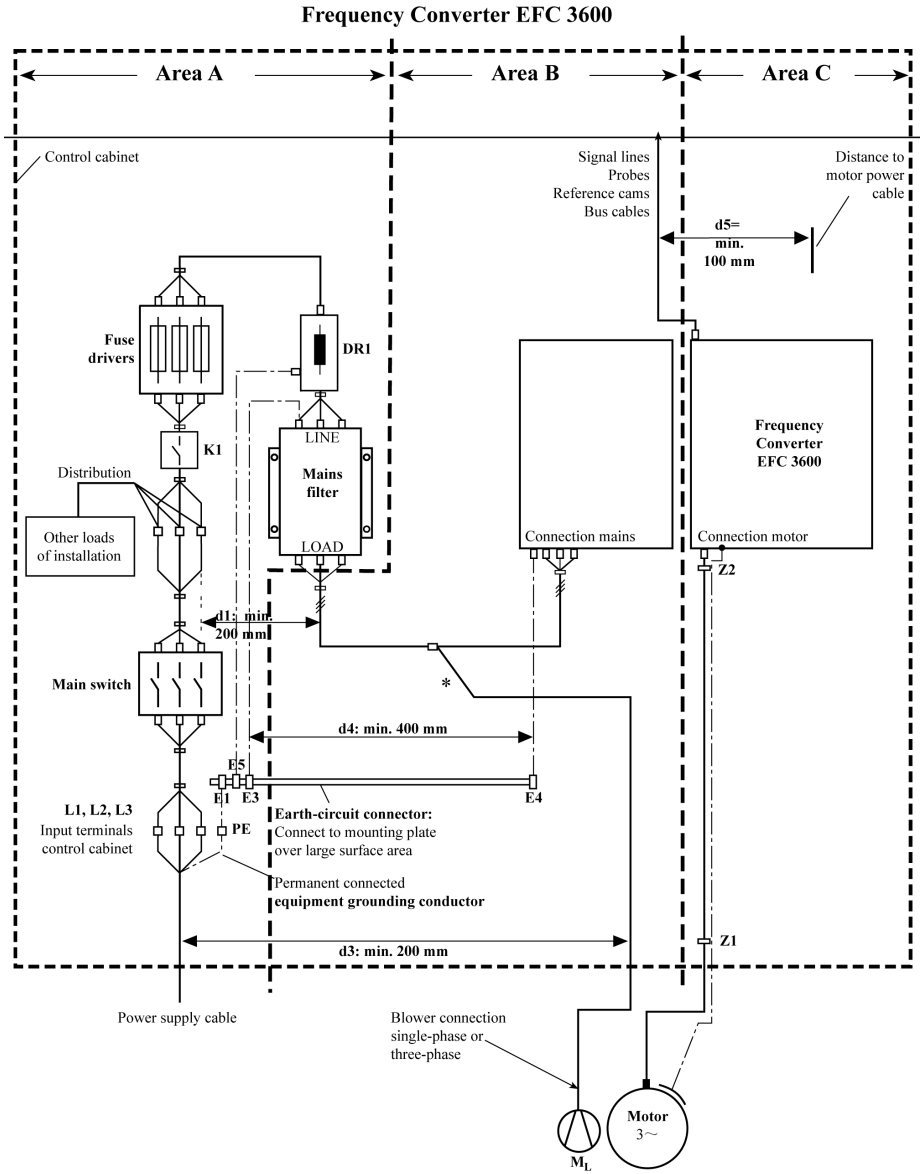

Electromagnetic Compatibility (EMC)

DR1	Mains choke (optional)	**E1…** **E5**	Equipment grounding conductor or the components
K1	External mains contactor	**M_L**	Motor blower
Z1, Z2	Shield connection points for cables		

Fig.11-3: Control cabinet mounting according to interference areas – exemplary arrangements

11.3.4 Design and installation in area A – interference-free area of control cabinet

Arrangement of the Components in the Control Cabinet

Comply with a distance of at least 200 mm (distance d1 in the figure):

- Between components and electrical elements (switches, pushbuttons, fuses, terminal connectors) in the interference-free area A and the components in the two other areas B and C

Comply with a distance of at least 400 mm (distance d4 in the figure):

- Between magnetic components (such as transformers, mains chokes and DC bus chokes that are directly connected to the power connections of the drive system) and the interference-free components and lines between mains and filter including the mains filter in area A

If these distances are not kept, the magnetic leakage fields are injected to the interference-free components and lines connected to the mains and the limit values at the mains connection are exceeded in spite of the installed filter.

Cable Routing of the Interference-free Lines to the Mains Connection

Comply with a distance of at least 200 mm (distance d1 and d3 in the figure):

- Between supply feeder or lines between filter and exit point from the control cabinet in area A and the lines in area B and C

If this is impossible, there are two alternatives:

1. Install lines in shielded form and connect the shield at several points (at least at the beginning and at the end of the line) to the mounting plate or the control cabinet housing over a large surface area.
2. Separate lines from the other interference-susceptible lines in areas B and C by means of a grounded distance plate vertically attached to the mounting plate.

Install the shortest possible lines within the control cabinet and install them directly on the grounded metal surface of the mounting plate or of the control cabinet housing.

Mains supply lines from areas B and C must not be connected to the mains without a filter.

☞ In case you do not observe the information on cable routing given in this section, the effect of the mains filter is totally or partly neutralized. This will cause the noise level of the interference emission to be higher within the range of 150 kHz to 40 MHz and the limit values at the connection points of the machine or installation will thereby be exceeded.

Routing and Connecting a Neutral Conductor (N)

If a neutral conductor is used together with a three-phase connection, it must not be installed unfiltered in areas B and C, in order to keep interference off the mains.

Motor Blower at Mains Filter

Single-phase or three-phase supply lines of motor blowers, that are usually routed in parallel with motor power cables or interference-susceptible lines, must be filtered:

- In frequency converter with **only infeeding supply units**, via the available three phase filter of the frequency converter

When switching power off, make sure the blower is not switched off.

Loads at Mains Filter of frequency converter

- Only operate allowed loads at the mains filter of the frequency converter!

Shielding Mains Supply Lines in Control Cabinet

If there is a high degree of interference injection to the mains supply line within the control cabinet, although you have observed the above instructions (to be found out by EMC measurement according to standard), proceed as follows:

- Only use shielded lines in area A
- Connect shields to the mounting plate at the beginning and the end of the line by means of clips

The same procedure may be required for long cables of more than 2 m between the point of power supply connection of the control cabinet and the filter within the control cabinet.

Mains Filters for AC Drives

Ideally, mount the external mains filter on the parting line between area A and B. Make sure the ground connection between filter housing and housing of the drive controllers has good electrically conductive properties.

If **single-phase** loads are connected on the load side of the external filter, their current may be a maximum of 10 % of the three-phase operating current. A highly imbalanced load of the external filter would deteriorate its interference suppression capacity.

If the mains voltage is higher than 480 V, connect the external filter to the output side of the transformer and not to the supply side of the transformer.

Electromagnetic Compatibility (EMC)

Grounding

In the case of bad ground connections in the installation, the distance between the lines to the grounding points E1, E2 in area A and the other grounding points of the frequency converter should be at least d4=400 mm, in order to minimize interference injection from ground and ground cables to the power input lines.

See also "Division into Areas (zones)" on page 0 .

Point of Connection for Environment Grounding Conductor at Machine, Installation, Control Cabinet

The equipment grounding conductor of the power cable of the machine, installation or control cabinet has to be permanently connected at point PE and have a cross section of at least 10 mm^2 or to be complemented by a second equipment grounding conductor via separate terminal connectors (according to EN 61800-5-1: 2007, section 4.3.5.4). If the cross section of the outer conductor is bigger, the cross section of the equipment grounding conductor must be accordingly bigger.

11.3.5 Design and installation in area B – interference –susceptible area of control cabinet

Arranging Components and Lines

Modules, components and lines in area B should be placed at a distance of at least d1=200 mm from modules and lines in area A.

Alternative: Shield modules, components and lines in area B by distance plates mounted vertically on the mounting plate from modules and lines in area A or use shield lines.

Only connect power supply units for auxiliary or control voltage connections in the frequency converter to the mains via a mains filter. See "Division into Areas (zones)" on page 0 .

Install the shortest possible lines between drive controller and filter.

Control Voltage or Auxiliary Voltage Connection

Only in exceptional cases should you connect power supply unit and fusing for the control voltage connection to phase and neutral conductor. In this case, mount and install these components in area A far away from area B and C of the frequency converter.

Run the connection between control voltage connection of the frequency converter and power supply unit used through area B over the shortest distance.

Line Routing

Run the lines along grounded metal surfaces, in order to minimize radiation of interference fields to area A (transmitting antenna effect).

11.3.6 Design and installation in area C – strongly interference-susceptible area of control cabinet

Area C mainly concerns the motor power cables, especially at the connection point at the drive controller.

Influence of the Motor Power Cable

The longer the motor cable, the greater its leakage capacitors. To comply with a certain EMC limit value, the allowed leakage capacitance of he mains filter is limited.

- Run the shortest possible motor power cables.

Routing the Motor Power Cables and Motor Encoder Cables

Route the motor power cables and motor encoder cables along grounded metal surfaces, both inside the control cabinet and outside of it, in order to minimize radiation of interference fields. If possible, route the motor power cables and motor encoder cables in metal-grounded cable ducts.

Route the motor power cables and motor encoder cables

- with a distance of at least **d5=100** mm to inference-free lines, as well as to signal cables and signal lines

  (alternatively separated by a grounded distance plate)
- in separate cable ducts, if possible

Routing the Motor Power Cables and Mains Connection Lines

For frequency converters (drive controllers with individual mains connection), route motor power cables and (unfiltered) mains connection lines **in parallel for a maximum distance of 300 mm**. After that distance, route motor power cables and power supply cables in opposite directions and preferably in separate **cable ducts.**

Ideally, the outlet of the motor power cables at the control cabinet should be provided in a distance of at least **d3=200 mm** from the (filtered) power supply cable.

11.3.7 Ground connections

Housing and Mounting Plate

By means of appropriate ground connections, it is possible to avoid the emission of interference, because interference is discharged to ground on the shortest possible way.

Ground connections of the metal housings of EMC-critical components (such as filters, devices of the frequency converter, connection points of the cable shields, devices with microprocessor and switching power supply units) have to be well contacted over a large surface area. This also applies to all screw connections between mounting plate and control cabinet wall and to the mounting of a ground bus to the mounting plate. The best solution is to use a zinc-coated mounting plate. Compared to a lacquered plate, the connections in this area have a good long-time stability.

Electromagnetic Compatibility (EMC)

Connection Elements

For lacquered mounting plates, always use screw connections with tooth lock washers and zinc-coated, tinned screws as connection elements. At the connection points, remove the lacquer so that there is safe electrical contact over a large surface area. You achieve contact over a large surface area by means of bare connection surfaces or several connection screws. For screw connections, you can establish the contact to lacquered surfaces by using tooth lock washers.

Metal Surfaces

Always use connection elements (screws, nuts, plain washers) with good electroconductive surface.

Bare zinc-coated or tinned metal surfaces have **good electroconductive properties**.

Anodized, yellow chromatized, black gunmetal finish or lacquered metal surfaces have **bad electroconductive properties**.

Ground Wires and Shield Connections

For connecting ground wires and shield connections, it is not the cross section but the size of contact surface that is important, as the high-frequency interference currents mainly flow on the surface of the conductor.

11.3.8 Installing signal lines and signal cables

Line Routing

The following measures are recommend:

- Route signal and control lines separately from the power cables with a minimum distance of d5=100 mm (see "Division into Areas (zones)" on page 0) or with a grounded separating sheet. The optimum way is to route them in separate cable ducts. If possible, lead signal lines into the control cabinet at one point only.
- If signal lines are crossing power cables, route them in an angle of 90° in order to avoid interference injection.
- Ground spare cables, that are not used and have been connected, at least at both ends so that they do not have any antenna effect.
- Avoid unnecessary line lengths.
- Run cables as close as possible to grounded metal surfaces (reference potential). The ideal solution are closed, grounded cable ducts or metal pipes which, however, is only obligatory for high requirements (sensitive instrument leads).
- Avoid suspended lines or lines routed along synthetic carries, because they are functioning like reception antennas (noise immunity) and like transmitting antennas (emission of interference). Exceptional cases are flexible cable tracks over short distances of a maximum of 5 m.

Shielding

Connect the cable shield immediately at the devices in the shortest and most direct possible way and over the largest possible surface area.

Connect the shield of analog signal lines at one end over a large surface area, normally in the control cabinet at the analog device. Make sure the connection to ground/housing is short and over a large surface area.

Connect the shield of digital signal lines at both ends over a large surface area and in short form. In the case of potential differences between beginning and end of the line, run an additional bonding conductor in parallel. This prevents compensating current from flowing via the shield. The guide value for the cross section is 10 mm^2.

You absolutely have to equip separate connections with connectors with grounded metal housing.

In the case of non-shielded lines belongs to the same circuit, twist feeder and return cable.

11.3.9 General measures of radio interference suppression for relays, contactors, switches, chokes and inductive loads

If, in conjunction with electronic devices and components, inductive loads, such as chokes, contactors, relays are switched by contacts or semiconductors, appropriate interference suppression has to be provided for them:

- By arranging free-wheeling diodes in the case of d.c. operation
- In the case of a.c. operation, by arranging usual RC interference suppression elements depending on the contactor type, immediately at the inductance

Only the interference suppression element arranged immediately at the inductance does serve this purpose. Otherwise, the emitted noise level is too high which can affect the function of the electronic system and of the drive.

If possible, mechanical switches and contacts should only be realized as snap contacts. Contact pressure and contact material must be suited for the corresponding switching currents.

Slow-action contacts should be replaced by snap switches or by solid-state switches, because slow-action contacts strongly bounce and are in an undefined switching status for a long time which emits electromagnetic waves in the case of inductive loads. These waves are an especially critical aspect in the case of manometric or temperature switches.

12 Accessories

12.1 Brake Resistor

12.1.1 Brief Introduction

Energy regenerated when a 3-phase AC motor is decelerated (the frequency is reduced) is recovered and fed into the frequency converter. To prevent over voltage of the frequency converter, an external brake resistor may be used. A power transistor discharges the DC bus voltage energy (braking voltage threshold at approx. 720 VDC for 400 V model, and 380 VDC for 200 V model) to the brake resistor, and the energy is lost as heat.

☞

- If a resistance lower than the recommended value (and no less than the minimum resistance) is used, contact the agent or manufacturer for calculation of resistance power.
- Safety and flammability of surrounding conditions shall be considered. Keep all items 10 cm away from the brake resistor.
- A brake resistor can not work overload for a long time. 10 times of rated load should not exceed 5 seconds.
- There could be smoking for the first use of the brake resistor as its surface uses organic silicon, which is normal and does not affect the performance of the brake resistor.

12.1.2 Brake Resistor Selection

Brake resistors with different power ratings are available to dissipate braking energy when the frequency converter is in generator mode.

The adjacent tables list the optimal combination of frequency converter, brake unit and brake resistor and the number of components required to operate one frequency converter with respect to a given moderating ratio OT.

$$OT = \frac{Tb}{Tc} * 100\%$$

OT Braking ratio **Tb** Braking time
Tc Cycle time

Fig.12-1: Braking ratio

EFC 3600 frequency converter			Brake chopper		Brake resistor		
Model [kW]		Typecode	Type-code	Qty.	Typecode	Parameter	Qty.
0.4	1x200 V	0K40-1P2-MDA	Internal	–	0060-N400R-D	400 Ω/60 W	1
0.75		0K75-1P2-MDA	Internal	–	0100-N190R-D	190 Ω/100 W	1
1.5		1K50-1P2-MDA	Internal	–	0200-N095R-D	95 Ω/200 W	1
2.2		2K20-1P2-MDA	Internal	–	0300-N065R-D	65 Ω/300 W	1
0.4	3x400 V	0K40-3P4-MDA	Internal	–	0060-N2K0R-D	2000 Ω/60 W	1
0.75		0K75-3P4-MDA	Internal	–	0100-N1K0R-D	1000 Ω/100 W	1
1.5		1K50-3P4-MDA	Internal	–	0200-N500R-D	500 Ω/200 W	1
2.2		2K20-3P4-MDA	Internal	–	0300-N330R-D	330 Ω/300 W	1
4.0		4K00-3P4-MDA	Internal	–	0500-N180R-D	180 Ω/500 W	1

Fig.12-1: Brake resistor selection_braking ratio OT=10 %

☞

- The full typecode for frequency converter is: EFC3600-□□□□-□□□-□□□-7P-NNNN
- The full typecode for brake resistor is: FELR01.1N-□□□□-□□□□□-□-560-NNNN

□ means the typecode listed in the table; Qty. means Quantity.

EFC 3600 frequency converter			Brake chopper		Brake resistor		
Model [kW]		Typecode	Type-code	Qty.	Typecode	Parameter	Qty.
0.4	1x200 V	0K40-1P2-MDA	Internal	–	0100-N400R-D	400 Ω/100 W	1
0.75		0K75-1P2-MDA	Internal	–	0200-N190R-D	190 Ω/200 W	1
1.5		1K50-1P2-MDA	Internal	–	0400-N095R-D	95 Ω/400 W	1
2.2		2K20-1P2-MDA	Internal	–	0500-N065R-D	65 Ω/500 W	1
0.4	3x400 V	0K40-3P4-MDA	Internal	–	0100-N2K0R-D	2000 Ω/100 W	1
0.75		0K75-3P4-MDA	Internal	–	0200-N1K0R-D	1000 Ω/200 W	1
1.5		1K50-3P4-MDA	Internal	–	0400-N500R-D	500 Ω/400 W	1
2.2		2K20-3P4-MDA	Internal	–	0500-N330R-D	330 Ω/500 W	1
4.0		4K00-3P4-MDA	Internal	–	1K00-N180R-D	180 Ω/1000 W	1

Fig.12-2: Brake resistor selection_braking ratio OT=20 %

- In the tables, the recommended resistance of the brake resistor is 100 % braking torque, selected according to necessity. If the actually needed torque is not 100 %, the resistance of the brake resistor in the table should be adjusted in inverse proportion, i.e. how much the brake torque increases based on 100 %, the resistance of the brake resistor should decrease by the same amount, vice versa.
- When selecting brake resistor R_b, make sure the current I_c which flows through the resistor is less than the current output ability of the brake unit. The current I_c through the brake resistor can be calculated by formula $I_c=U_d/R_b$, in which U_d is the braking operating voltage of brake unit.
- After the adjustment of the resistance of brake resistor, the power of brake resistor should be also adjusted appropriately. The power can be calculated by formula $P_{max}=U_d^2 / R_b$. According to the actual working condition, the braking ratio OT % can be selected to reduce the power of brake resistor reasonably for intermittent braking load. The power of brake resistor can be calculated by formula $P_R=K * P_{max} * OT\ \%$, in which k is the derating coefficient of brake resistor. The selection of the brake torque should be in general smaller than 150 % of the rated motor torque, or consulting the technical support for more information.

12.1.3 Brake Resistor in Aluminium Housing

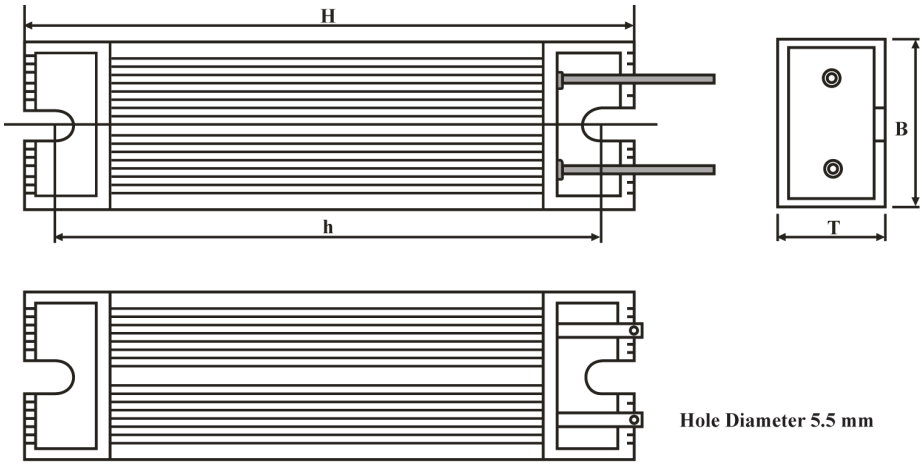

Figure A

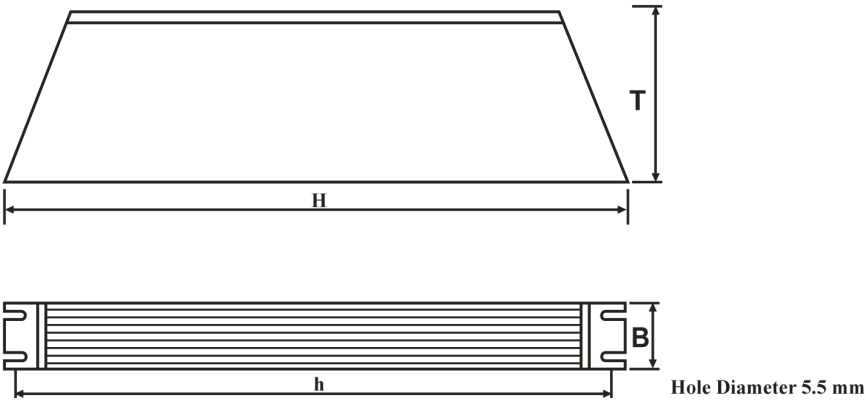

Figure B

Fig.12-2: Brake resistor in aluminum housing

Brake resistor typcode	Impedance [Ω]	Power [W]	Figure	Dimensions [mm]					Wiring [mm²]	Terminal [mm]	Wiring length [mm]	Weight [kg]	Type
				H	h	B	b	T					
0500-N065R-D	65	500	A	335	317	60	–	30	1.5	M6	500	1.03	Al.①
0500-N180R-D	180	500		335	317	60	–	30	1.5	M6	500	1.03	Al.
0500-N330R-D	330	500		335	317	60	–	30	1.5	M6	500	1.03	Al.
0400-N095R-D	95	400		265	247	60	–	30	1.5	M6	500	0.8	Al.
0400-N500R-D	500	400		265	247	60	–	30	1.5	M6	500	0.8	Al.
0300-N065R-D	65	300		215	197	60	–	30	1.5	M6	500	0.62	Al.
0300-N330R-D	330	300		215	197	60	–	30	1.5	M6	500	0.62	Al.
0200-N095R-D	95	200		165	147	60	–	30	1.5	M6	500	0.464	Al.
0200-N190R-D	190	200		165	147	60	–	30	1.5	M6	500	0.464	Al.
0200-N500R-D	500	200		165	147	60	–	30	1.5	M6	500	0.464	Al.
0200-N1K0R-D	1000	200		165	147	60	–	30	1.5	M6	500	0.464	Al.
0100-N190R-D	190	100		165	148	40	–	20	1.5	M6	500	0.24	Al.
0100-N400R-D	400	100		165	148	40	–	20	1.5	M6	500	0.24	Al.
0100-N1K0R-D	1000	100		165	148	40	–	20	1.5	M6	500	0.24	Al.
0100-N2K0R-D	2000	100		165	148	40	–	20	1.5	M6	500	0.24	Al.
0060-N400R-D	400	60		115	98	40	–	20	1.5	M6	500	0.165	Al.
0060-N2K0R-D	2000	60		115	98	40	–	20	1.5	M6	500	0.165	Al.
1K00-N180R-D	180	1000	B	400	384	50	30	107	–	M6	–	3.6	Al.

Fig.12-3: Aluminium brake resistor dimensions

①: Al. means aluminum housing brake resistor.

12.2 Communication Interface

12.2.1 RS485/RS232 Adapter

RS232/RS485 adapter (FEAA01.1-RS485-RS232-NNNN-NN, see chapter 17.3 "Appendix 3: Type Coding" on page 225) is used to connect the RS485 interface (ModBus) with RS232 interface of a PC or other control units.

12.2.2 Cable for RS485/RS232 Adapter

The cable FRKB0002/005,0, which is 1 m long (see chapter 17.3 "Appendix 3: Type Coding" on page 225), is used to connector the frequency converter to the RS485/232 adapter.

12.3 Accessories for Control Cabinet Mounting

12.3.1 Operating Panel Cable for Control Cabinet Mounting

The cable FRKS0001/001,0, which is 1 m long (see chapter 17.3 "Appendix 3: Type Coding" on page 225), is used to connect the operating panel for control cabinet mounting with the frequency converter. The cable FRKS0002/003,0, which is 3 m long (see chapter 17.3 "Appendix 3: Type Coding" on page 225), can be also used for the connection of the operating panel. For connection of the FRKS0001 or FRKS0002 cable, it is necessary to remove the panel at the frequency converter and connect the cable there.

13 Communication Protocols

13.1 Brief Introduction

EFC 3600 frequency converters provide standard RS485 communication port to realize the communication between the master station via ModBus protocol. With the help of a PC, a PLC or an external computer a "single master/multiple slaves" network control can be realized (setting of frequency control command and running frequency, modification of function code parameters, monitoring of frequency converter running status and failure messages) to address the specific requirements of applications.

13.2 ModBus Protocol

13.2.1 Protocol Description

Brief introduction

- ModBus is a master/slave protocol. Only one device may send commands in the network at a particular time.
- The master station manages information exchange by polling the slave stations. Unless being approved by the master station, no slave station may send information. In case of an error during data exchange, if no response is received, the master station will query the slave stations absent from the polling.
- If a slave station is unable to understand a message from the master station, it will send an exception response to the master station.
- Slave stations can’t communicate with each other but through the master’s software, which reads data from one slave station and send them to another. There are two types of dialogs between the master station and the slave stations:
  - The master station sends a request to a slave station and waits for its response.
  - The master station sends a request to all slave stations and does not wait for their response (broadcasting).

Transmission

The transmission is of RTU (remote terminal unit) mode with frames containing no message header or end mark. A typical RTU frame format is shown below:

Slave address	Function code	Data	CRC
1 byte	1 byte	0 ~ 252 byte(s)	CRC low|CRC high

Fig.13-1: Typical RTU frame format

Data are transmitted in binary codes.

- The address 0 is reserved as broadcast address.
- All slave nodes must recognize the broadcast address for writing function (no need of reply).
- The master node has no specific address, only the slave nodes must have an address (from 1 ~ 247).

For RTU transmission mode, three type character formats are shown below:

- 1 start bit, 8 data bits, 1 stop bit, no parity;
- 1 start bit, 8 data bits, 1 stop bit, even parity;
- 1 start bit, 8 data bits, 1 stop bit, odd parity;
- 1 start bit, 8 data bits, 2 stop bits, no parity.

And the character or byte is sent in this order (from left to right):

<-Least Significant Bit (LSB)					Most Significant Bit (MSB)->					
With parity checking										
Start	1	2	3	4	5	6	7	8	Parity	Stop
Without parity checking										
Start	1	2	3	4	5	6	7	8	Stop	Stop

Fig.13-2: RTU transmission mode

Message frames are separated by a silent interval of at least 3.5 character times. The entire frame must be transmitted as a continuous stream of bytes. If the interval of two separated frames is less than 3.5 character times, then the slave address of second frame will be treated as the part of first frame by mistake, due to the confusion of the frames, the CRC check will fail and lead to communication fault. If a silent interval of more than 1.5 character times occurs between two bytes, the message frame is declared incomplete and should be discarded by the receiver.

13.2.2 Interface

The communication interface of EFC 3600 frequency converters is shown as below:

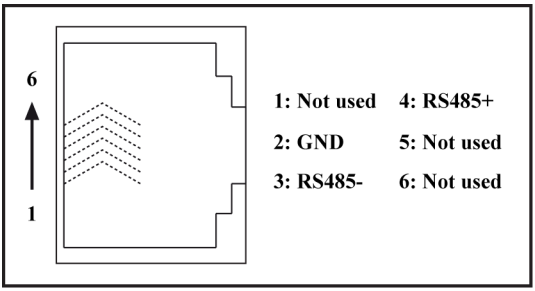

Fig.13-1: Communication interface

13.2.3 ModBus Function Codes and Message Format

Supported Functions

The main function of ModBus is to read and to write parameters. Different function codes decide different operation requests. MouBus functions managed by EFC 3600 and their limits are shown in the table below:

Code	Function name	Broadcast	Max. value of N
3=0x03	Read N register words	NO	16
6=0x06	Write one register word	YES	–
8=0x08	Diagnosis	NO	–
16=0x10	Write N register words	YES	16
23=0x17	Read/write N register words	NO	16

Fig.13-3: EFC 3600 ModBus functions and limits

☞ "Read" and "Write" are considered from the prospect of the master station.

Modbus message formats are different according to the function codes shown below.

Slave No.	0x03	Address of 1st word	Number of words	CRC16
		Hi | Lo	Hi | Lo	Lo | Hi

Fig.13-4: Function 3_Request from the master

Slave No.	0x03	Number of bytes	1st word value	–	Last word value	CRC16
		Depends on master request	Hi | Lo		Hi | Lo	Lo | Hi

Fig.13-5: Function 3_Response from the slave

Slave No.	0x06	Address of word	Value of word	CRC16
		Hi | Lo	Hi | Lo	Lo | Hi

Fig.13-6: Function 6_Master request and Slave response (in same format)

Slave No.	0x08	Test word 1	Test word 2	CRC16
		Hi | Lo	Hi | Lo	Lo | Hi

Fig.13-7: Function 8_Master request and Slave response (in same format)

Slave No.	0x10	Address of 1st word	Number of words	Number of bytes	1st word value	–	Last word value	CRC16
		Hi | Lo	Hi | Lo		Hi | Lo		Hi | Lo	Lo | Hi

Fig.13-8: Function 16_Request from the master

Slave No.	0x10	Address of 1st word	Number of words	CRC16
		Hi | Lo	Hi | Lo	Lo | Hi

Fig.13-9: Function 16_Response from the slave

Slave No.	0x17	Address of 1st word to be read	Number of words to be read	Address of 1st word to be written
		Hi | Lo	Hi | Lo	Hi | Lo

Number of words to be written	Number of bytes to be written	Value of 1st word to be written	–	Value of last word to be written	CRC16
Hi | Lo		Hi | Lo		Hi | Lo	Lo | Hi

Fig.13-10: Function 23_Request from the master

Slave No.	0x17	Number of bytes read	1st word value read	–	Last word value read	CRC16
			Hi | Lo		Hi | Lo	Lo | Hi

Fig.13-11: Function 23_Response from the slave

Function codes example

- Function 0x03: Read N register words, range: 1 ~ 16.

  Example: It is necessary to read 2 continuous words starting from communication register 0100H of the slave frequency converter addressed at 01H. The frame structure is described in the tables below.

Start	Transmission time for 3.5 bytes
Slave address	01H
ModBus function code	03H
Higher byte of start address	01H

Lower byte of start address	00H
Higher byte of data	00H
Lower byte of data	02H
CRC lower byte	C5H
CRC higher byte	F7H
End	Transmission time for 3.5 bytes

Fig.13-12: Function 0x03_Request from RTU master

Start	Transmission time for 3.5 bytes
Slave address	01H
ModBus function code	03H
Bytes of data	04H
Higher byte of data in register 0100H	00H
Lower byte of data in register 0100H	05H
Higher byte of data in register 0101H	00H
Lower byte of data in register 0101H	00H
CRC lower byte	EAH
CRC higher byte	32H
End	Transmission time for 3.5 bytes

Fig.13-13: Function 0x03_Response from RTU slave

- Function 0x06: Write one register word

⚠ CAUTION **Frequent writing may damage the internal registers!**

– When data is written into the internal registers, there is a limit on the writing times. The register address may be damaged once the writing times is beyond the writing limit. So please avoid frequency writing!

– For details of user writing permission, please see chapter 17.2.1 "Description of Attribute Symbols in Parameter Tables" on page 195.

Example: Write 0000H to communication register address 0005H of the slave frequency converter with address 01H. The frame structure is described in the tables below:

Start	Transmission time for 3.5 bytes
Slave address	01H

ModBus function code	06H
Higher byte of write register address	00H
Lower byte of write register address	05H
Higher byte of write data	00H
Lower byte of write data	00H
CRC lower byte	99H
CRC higher byte	CBH
End	Transmission time for 3.5 bytes

Fig.13-14: Function 0x06_Request from RTU master

Start	Transmission time for 3.5 bytes
Slave address	01H
ModBus function code	06H
Higher byte of write register address	00H
Lower byte of write register address	05H
Higher byte of write data	00H
Lower byte of write data	00H
CRC lower byte	99H
CRC higher byte	CBH
End	Transmission time for 3.5 bytes

Fig.13-15: Function 0x06_Response from RTU slave

- Function 0x08: Diagnostics

  Example: To test the communication loop of 2 continuous words 1234H and 5678H with frequency converter slave address 01H, the frame structure is described in the tables below:

Start	Transmission time for 3.5 bytes
Slave address	01H
ModBus function code	08H
Higher byte of sub-function	00H
Lower byte of sub-function	00H
Higher byte of test word 1	12H
Lower byte of test word 1	34H
Higher byte of test word 2	56H
Lower byte of test word 2	78H
CRC lower byte	73H

CRC higher byte	33H
End	Transmission time for 3.5 bytes

Fig.13-16: Function 0x08_Request from RTU master

Start	Transmission time for 3.5 bytes
Slave address	01H
ModBus function code	08H
Higher byte of sub-function	00H
Lower byte of sub-function	00H
Higher byte of test word 1	12H
Lower byte of test word 1	34H
Higher byte of test word 2	56H
Lower byte of test word 2	78H
CRC lower byte	73H
CRC higher byte	33H
End	Transmission time for 3.5 bytes

Fig.13-17: Function 0x08_Response from RTU slave

- Function 0x10: Write N register words, range 1 ~ 16.

  Example: To modify 2 continuous registers start from 0114H with words 0032H and 0032H with slave frequency converter address 01H. The frame structure is described in the tables below:

Start	Transmission time for 3.5 bytes
Slave address	01H
ModBus function code	10H
Higher byte of write register start address	01H
Lower byte of write register start address	14H
Higher byte of register number	00H
Lower byte of register number	02H
Bytes of data	04H
Higher byte of data in register 0109H	00H
Lower byte of data in register 0109H	32H
Higher byte of data in register 010AH	00H
Lower byte of data in register 010AH	32H
CRC lower byte	DEH

CRC higher byte	DAH
End	Transmission time for 3.5 bytes

Fig.13-18: Function 0x10_Request from RTU master

Start	Transmission time for 3.5 bytes
Slave address	01H
ModBus function code	10H
Higher byte of write register start address	01H
Lower byte of write register start address	14H
Higher byte of register number	00H
Lower byte of register number	02H
CRC lower byte	00H
CRC higher byte	30H
End	Transmission time for 3.5 bytes

Fig.13-19: Function 0x10_Response from RTU slave

- Function 0x17: Read/Write N register words, range 1 ~ 16.

  Example: To read data in 2 continuous registers starting from address 0114H, write 00C8H and 00C8H to 2 continuous registers starting from address 0117H. The frame structure is described in the tables below:

Start	Transmission time for 3.5 bytes
Slave address	01H
ModBus function code	17H
Higher byte of read register start address	01H
Lower byte of read register start address	14H
Higher byte of read register number	00H
Lower byte of read register number	02H
Higher byte of write register start address	01H
Lower byte of write register start address	17H
Higher byte of write register number	00H
Lower byte of write register number	02H
Bytes of data for writing	04H
Higher byte of data in register 0109H	00H
Lower byte of data in register 0109H	C8H
Higher byte of data in register 010AH	00H
Lower byte of data in register 010AH	C8H

CRC lower byte	38H
CRC higher byte	E3H
End	Transmission time for 3.5 bytes

Fig.13-20: Function 0x17_Request from RTU master

Start	Transmission time for 3.5 bytes
Slave address	01H
ModBus function code	17H
Bytes of read register	04H
Higher byte of read register 0100H	00H
Lower byte of read register 0100H	32H
Higher byte of read register 0101H	00H
Lower byte of read register 0101H	32H
CRC lower byte	D9H
CRC higher byte	3DH
End	Transmission time for 3.5 bytes

Fig.13-21: Function 0x17_Response from RTU slave

Error code and exception code

If the slave receives the request without a communication error, but cannot handle it, the slave will return an exception response which includes error code and exception code informing the master of the nature of the error. The error code is formed by setting the MSB of the function code to 1 (i.e. function code plus with 0x80, like 0x83, 0x86, 0x90, 0x97), then the exception response has a format shown below.

Slave No.	Error code	Exception code	CRC16
			Lo | Hi

Exception codes for EFC 3600 frequency converters:

- 1=Parameter cannot be modify owing to user password locked
- 2=The function requested is not recognized by the slave, i.e. not equal to 3, 6, 8, 16 or 23
- 3=The word address indicated in the request do not exist in the slave
- 4=The word values indicated in the request are not permissible in the slave
- 5=Parameters cannot be modify in run mode
- 6=Parameters are read-only that cannot be modified
- 7=Invalid operation which is decided by the function of frequency converter(*)

- 9=EEPROM read/write error
- B=Function code 3, read range exceeds 16

- (*) includes situations listed below:
  - Write operations on [b0.06] parameter replication, [b0.30] running monitoring display, [b0.31] stop monitoring display and [S2.15] physical data calculation, are prohibited.
  - Write operations on [b0.00] user password, [b0.01] manufacture password and [b0.05] parameter initialization only support Function 6.
  - Multi-function digital input terminals ([E0.01] ~ [E0.05]) writing operation do not permit repeated nonzero value.

13.2.4 Communication Mapping Register Address Distribution

The communication mapping registers of ModBus are in three types: frequency converter parameter registers, communication control registers and communication state feedback registers.

- Frequency converter parameter registers

Frequency converter parameter registers correspond to the function codes one-to-one. Reading and writing of related function codes can be achieved through reading and writing of the contents in frequency converter parameter registers via ModBus communication. The characteristics and scope of reading and writing function codes are in compliance with the frequency converter function code description. The address of a frequency converter parameter register is composed of a high byte representing the function code group and a low byte representing the index in the group. The groups are mapped as follows:

Address high byte	0x00	0x01	0x02	0x03	0x04	0x05	0x06	0x07	0x08	0x09	0x0A	0x0B	0x0C	0x0D
Group	b0	b1	S0	Reserved	S2	S3	E0	E1	E2	E3	E4	H0	P0(*)	d0(**)

Fig.13-22: Frequency converter parameter registers

(*): The manufacturer parameter groups (P-group) can always be read (independent of the manufacturer password setting). It depends on the password setting if the parameter can be modified over communication.

(**): Parameters of the monitoring group (d0-group) are always write-protected.

Examples:

To read out the module temperature ([d0.16]) of EFC 3600 frequency converter, use register address 0x0D10 (0x0D=d0-group, index 0x10=16).

To set V/f curve mode (S0.00) of EFC 3600 frequency converter, use register address 0x0200 (0x02=S0-group, index 0).

Access to a non-existing function code will be acknowledged with exception code 3 (see chapter 13.2.3 "ModBus Function Codes and Message Format" on page 174).

- Communication control registers

The address of command word register for communication control is 0x4000. This register is write-only. The frequency converter is controlled through writing data into the address. The definition of each bit is shown in table below:

Bit	Value	Description
15~8	–	Reserved
7	1	Control word active
	0	Inactive
6	1	Stop Acc. / Dec. active (stop the internal Acc. / Dec. ramp generator)
	0	Inactive
5	1	Fault reset active
	0	Inactive
4	1	E-stop active
	0	Inactive
3	1	Stop according to parameter setting
	0	Inactive
2	1	Reverse
	0	Forward
1	1	Jog active (jogging direction determined by bit 2)
	0	Inactive
0	1	Run command active
	0	Inactive

Fig.13-23: Communication control registers

The address of frequency setting register for communication control is 0x4001. This register is for read and write. When [b1.00] "First frequency setting source" is set to "5: Given via communication", the frequency converter can be set with writing data to this address.

If the communication frame check is successful (CRC valid), the frequency converter always accepts the content of the control word. Any conflicts (e.g. run command and stop command active at the same time) are resolved by the application functionality (RUN/STOP generator, jog control, ...). This assures that the inverter will always react in the same manner, independent of the run command source.

- Communication state feedback registers (0x5000)

The frequency converter state can be monitored by reading the register. This register is read-only. The definition of each bit is shown in the table below:

Bit	Value	Description
15 ~ 11	–	Error code (equal to [E4.20])
10 ~ 8	–	Reserved
7	1	Error
	0	No error
6	1	Stall over current
	0	Normal
5	1	Stall over voltage
	0	Normal
4	1	Decelerating
	0	Not in deceleration
3	1	Accelerating
	0	Not in Acceleration
2	1	Jogging
	0	Not in jog
1	1	Running
	0	Stop
0	1	Reverse
	0	Forward

Fig.13-24: Communication state feedback registers (0x5000)

13.2.5 ModBus Communication Example

One slave address is 01H. The frequency setting of the frequency converter has been set to "Given via communication" and the RUN command source is set to "Inputting commands via communication". It is required for the motor connected to the frequency converter to run with 50Hz (forward rotation). The operation can be achieved with function 0x10 (function 16) of the ModBus protocol. The messages of the requests from the master and responses from the slave are shown in table below:

- Example 1: Start 01# frequency converter for forward rotation at frequency of 50.00 Hz (represented by 5000 internally)

	Slave address	Function code	Start address	Number of address	Bytes of data	Data content	CRC code
Request	0x01	0x10	0x4000	0x0002	0x04	0x0001 0x1388	0xFA9E
Response	0x01	0x10	0x4000	0x0002	N/A	N/A	0x0854

- Example 2: Read the output frequency of 01# frequency converter and output velocity

	Slave address	Function code	Start address	Number of address	Bytes of data	Data content	CRC code
Request	0x01	0x03	0x0D04	0x0002	N/A	N/A	0x6687
Response	0x01	0x03	N/A	N/A	0x04	0x00E2 0x0015	0x9BCA

- Example 3: Stop 01# frequency converter according to the stopping mode with the function code

	Slave address	Function code	Start address	Number of address	Bytes of data	Data content	CRC code
Request	0x01	0x06	0x4000	N/A	N/A	0x0008	0xCC9D
Response	0x01	0x06	0x4000	N/A	N/A	0x0008	0xCC9D

13.2.6 Special Notes

1. The external computer can not write to function codes [b0.06] "Parameter replication", [b0.30] "running monitoring display" and [b0.31] "Stop monitoring display".
2. [b0.00] "User password" and [b0.05] "Parameter initialization" do not support multiple write including single write in multiple write; Motor nameplate parameters and motor physical data should not be modified simultaneously; Multi-function digital input terminals ([E0.01] ~ [E0.05]) writing operation do not permit repeated nonzero value.

3. If the communication protocol is changed, baud rate, data frame and local address will be restored to factory default.
4. The read response of user password and manufacture password is "0000" in case of external computer reading.
5. The external computer can set, modify or cancel user password, the specific operation is same to the situation when "Running command source" is from keyboard.
6. The access to control registers and state registers is not limited by user password.

13.2.7 Communication Networking

Networking

The communication network is shown in figure below, with a PC, a PLC or an external computer and various frequency converters, which are connected by shielded twisted pair cables via RS232/485 adapters. The slave at the end of the network needs a termination resistor with recommended value of 120 Ω, 0.25 W.

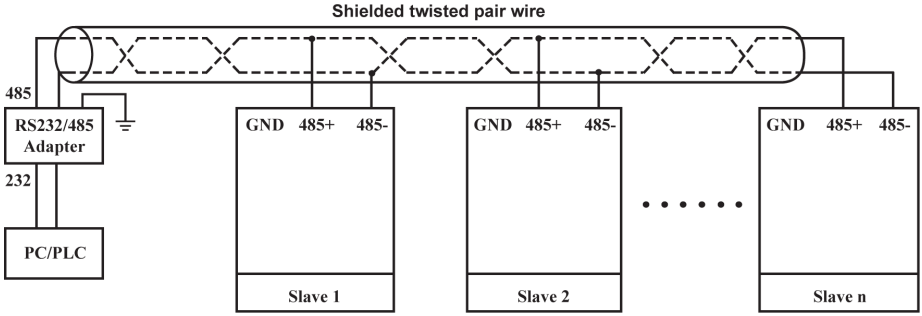

Fig.13-2: Communication networking

⚠ WARNING Cables may only be connected when the frequency converter is turned off!

Recommendations on networking

- Use shielded twisted pair cable to connect RS485 links.
- ModBus cable should be adequately away from power cables (30 cm in minimum).

Communication Protocols

- Avoid crossing of ModBus cables and power cables and use orthogonal crossing if crossing must be used.
- The shield layer of cables should be connected to protected ground or to equipment ground if the equipment ground has already been connected to protected ground. Do not directly ground any point of the RS485 network.
- In no circumstance should ground cables constitute a loop.

14 Maintenance

14.1 Safety Instructions

⚠ WARNING **High electric voltage! Risk of death or severe bodily injury by electric shock!**

- Only those trained and qualified to work with or on electrical equipment are permitted to operate, maintain and repair this equipment.
- Do not operate electrical equipment at any time, even for brief measurements or tests, if the equipment grounding conductor is not permanently connected to the mounting points of the components provided for this purpose.
- Before working with electrical parts with voltage potentials higher than 50 V, the device must be disconnected from the mains voltage. Ensure that the mains voltage is not reconnected.
- In the frequency converters, capacitors are used in the DC bus as energy stores. Energy stores maintain their energy even when the supply voltage has been cut off. Frequency converters have been dimensioned in such a way that after the supply voltage was cut off, the voltage value falls below 50 V within a discharging time of a maximum of 10 minutes.

14.2 Daily Inspection

Please conduct daily inspection as indicated in the table below in order to prolong the life cycle of frequency converters.

Inspection category	Inspection item	Inspection criteria	Inspection result
Ambient conditions	Temperature	-10 ~ 50 ℃ (no frost or condensation)	
	Relative humidity	<90 %RH (no condensation)	
	Dust, water and leakage	No heavy dust or sign of leakage (visual inspection)	
	Gas	No strange smell	
	Sound	No strange sound	
	Operating panel display	No error code	
Frequency converter	Fan	No blockage or contamination	
Motor	Sound	No strange sound	

Fig.14-1: Daily inspection list

14.3 Periodic Inspection

In addition to daily inspection, periodic inspection of frequency converters is also necessary. The inspection cycle should be less than 6 months. For operation details, please see table below:

Inspection category	Inspection item	Inspection criteria	Solution
Power supply	Voltage	Specified in nameplate	1-phase: 200~240 V (-10 % / +10 %) 3-phase: 380~480 V (-15 % / +10 %)
Power cable	Power cable	No color change or damage	Replace cable
Signal line	Signal line		Replace signal line
Terminal connection	Crimp terminal and cable / line	No loose connection	Tighten crimp and terminal screw
	Crimp terminal and terminal block		
Frequency converter	Visual appearance	No deformation	Contact service engineers
	Fan	No color change or deformation	Replace fan
		No blockage or contamination	Eliminate blockage and clean fan
	Cooling system (radiator, inlet, outlet)	No blockage or foreign matters	Eliminate blockage and clear foreign matters
	Printed circuit board	No dust or oil contamination	Clean printed circuit board
	DC bus capacitor	No leakage, color change, crack or expansion with safety valve shut down	Replace DC bus capacitor (must be operated by service engineers)
Accessories	Connection	No loose connection	Tighten terminal screw
	Cable	No color change or damage	Replace cable

Fig.14-2: Periodic inspection list

14.4 Operating Panel Removal and Mounting

Step 1: Press the operating panel buckles

Step 2: Pull up the operating panel vertically

Step 3: Remove one screw

Step 4: Remove the communication adapter

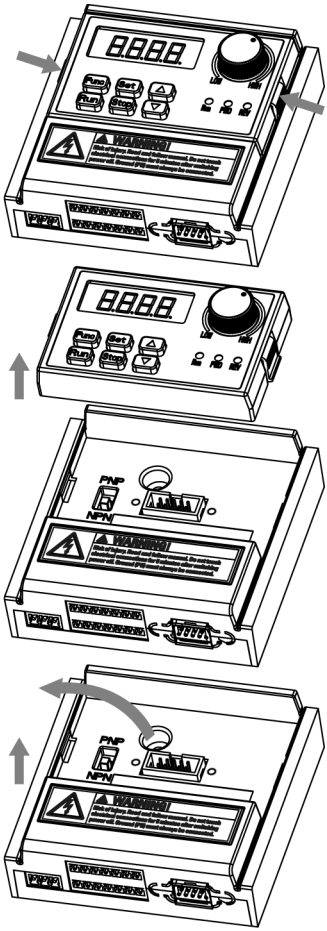

Fig.14-1: Operating panel removal

Step 2: Tighten one screw

Step 1: Mount the communication adapter

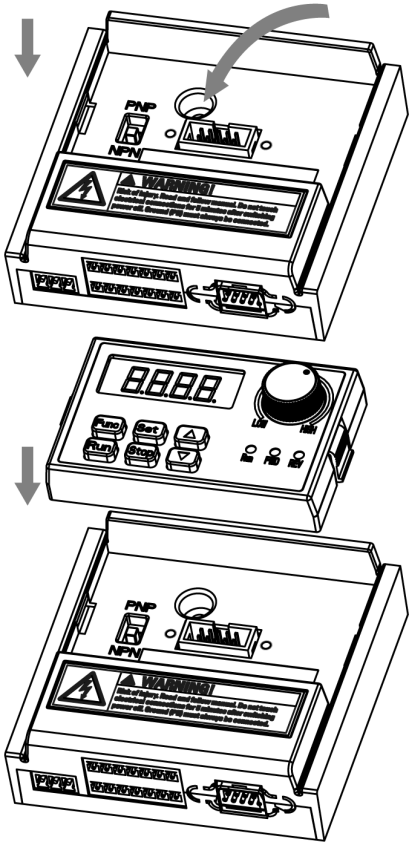

Step 3: Push down the operating panel vertically

Fig.14-2: Operating panel mounting

14.5 Fan Removal and Mounting

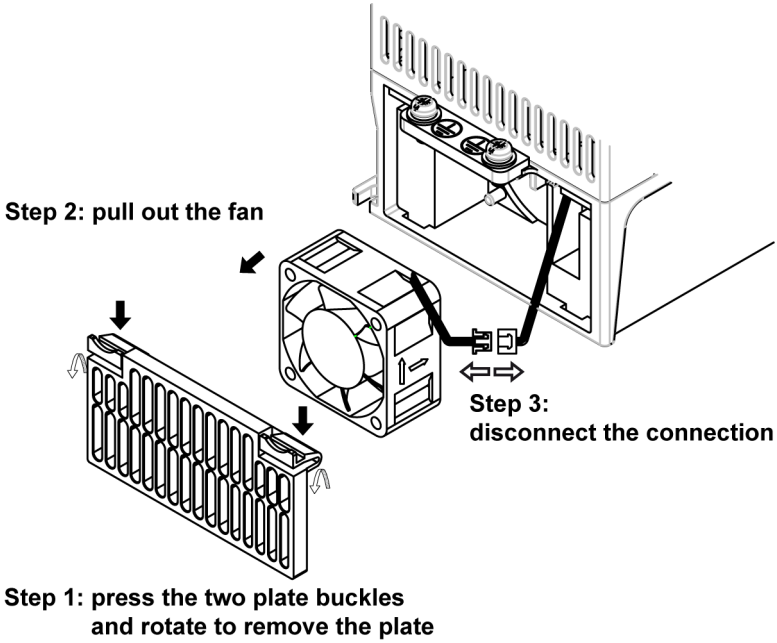

Fig.14-3: Fan removal

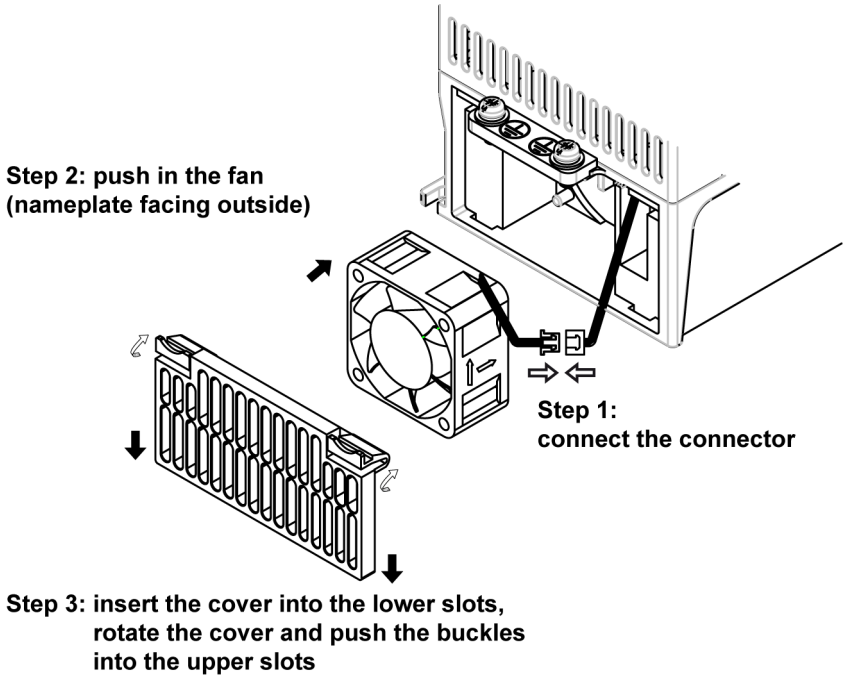

Fig.14-4: Fan mounting

15 Service and Support

Our service helpdesk at our headquarters in Lohr, Germany, will assist you with all kinds of enquiries. Out of helpdesk hours please contact our German service department directly.

	Helpdesk	Service Hotline Germany	Service Hotline Worldwide
Time[1]	Mon. - Fri. 7:00 am - 6:00 pm CET	Mon. - Fri. 6:00 pm - 7:00 am CET Sat. - Sun. 0:00 am - 12:00 pm CET	Outwith Germany please contact our sales/service office in your area first. For hotline numbers refer to the sales office addresses on the Internet.
Phone	+49 (0) 9352 40 5060	+49 (0) 171 333 88 26 or +49 (0) 172 660 04 06	
Fax	+49 (0) 9352 18 4941	–	
e-mail	service.svc@boschrexroth.de	–	
Internet	http://www.boschrexroth.com You will also find additional notes regarding service, maintenance (e.g. delivery addresses) and training.		

[1] Central European Time (CET)

Preparing Information

For quick and efficient help please have the following information ready:

- detailed description of the fault and the circumstances
- information on the type plate of the affected products, especially type codes and serial numbers
- your phone, fax numbers and e-mail address so we can contact you in case of questions.

16 Disposal and Environmental Protection

16.1 Disposal

Packaging materials

The packaging materials consist of cardboard and polystyrene. These materials can be easily recycled. For ecological reasons you should not return the empty packages to us.

16.2 Environmental Protection

No Release of Hazardous Substances

Our products do not contain any hazardous substances that they can release in case of appropriate use. Normally there are not any negative effects on the environment to be expected.

Materials contained in the electronic devices:

- steel
- aluminum
- copper
- synthetic materials
- electronic components and modules

Recycling

Due to their high content of metals most of the product components can be recycled. In order to recycle the metal in the best possible way it is necessary to disassemble the products into individual modules. The metals contained in the electric and electronic modules can also be recycled by means of specific separation processes. The synthetic materials remained after these processes can be thermally recycled.

17 Appendix

17.1 Appendix 1: Abbreviations

Rexroth EFC 3600 Frequency Converter drive system is composed of individual parts (components) for application in different circumstances.

- EFC 3600: EFC 3600 Frequency converter
- FPCC: Operating panel
- FELR: Brake resistor
- FEAA: RS485/232 interface adapter
- FRKB: Interface adapter cable
- FRKS: Operating panel cable

17.2 Appendix 2: Parameter List

17.2.1 Description of Attribute Symbols in Parameter Tables

Parameter attribute	Description
RUN/STOP	Parameter setting can be modified when the frequency converter is in RUN or STOP mode.
STOP	Parameter setting can only be modified when the frequency converter is in STOP mode.
mpwd	Parameter setting can only be modified when the manufacturer password protection is disabled.
read only	Parameter setting is read-only and can't be modified.

Fig.17-1: Description of attribute symbols in parameter tables

17.2.2 Group b0: System Parameters

Password and access control

Function code	Name	Setting range	Min. unit	Factory default	Attribute
b0.00	User password	0 ~ 65535	1	0	RUN/ STOP
b0.01	Manufacturer password	0 ~ 65535	1	0	STOP

Function code	Name	Setting range	Min. unit	Factory default	Attribute
b0.02	Access authority setting	0: Basic parameters 1: Standard parameters 2: Extended parameters 3: Advanced parameters 4: Start-up mode	1	0	RUN/ STOP
b0.03	Reserved	–	–	–	–
b0.04	Reserved	–	–	–	–

System configuration

Function code	Name	Setting range	Min. unit	Factory default	Attribute
b0.05	Parameter initialization	0: No action 1: Restore factory default 2: Remove error record Note: The value is automatically set to be 0 after the operation.	1	0	STOP
b0.06	Parameter replication	0: No action 1: Read parameter 2: Write parameter Note: The value is automatically set to be 0 after the operation.	1	0	STOP
b0.07 ~ b0.19	Reserved	–	–	–	–

Frequency Converter configuration

Function code	Name	Setting range	Min. unit	Factory default	Attribute
b0.20	Frequency converter rated voltage setting	200 V: 200 ~ 240 V 400 V: 380 ~ 480 V	1 V	220 V 380 V	STOP
b0.21	Carrier frequency	1 ~ 15 kHz	1 kHz	4 kHz	RUN/STOP

Function code	Name	Setting range	Min. unit	Factory default	Attribute
b0.22	Automatic adjustment of carrier frequency	0: OFF 1: ON	1	0	STOP
b0.23 ~ b0.29	Reserved	–	–	–	–

Monitoring display

Function code	Name	Setting range	Min. unit	Factory default	Attribute
b0.30	Running monitoring display	0: Output frequency 1: Output rotation speed 2: Set frequency	1	0	RUN/ STOP
b0.31	Stop monitoring display	3: Set rotation speed 4: Output voltage 5: Output current 6: Output power 7: DC bus voltage 8: Analog input AIV 9: Analog input AIC 10: User-defined set frequency 11: User-defined output frequency 12: Digital input status 13: Digital output status 14: PID target engineer value 15: PID feedback engineer value 16: Module temperature 17: Firmware version 1 18: Firmware version 2 19: Firmware version 3 20: Actual carrier frequency	1	2	RUN/ STOP

Function code	Name	Setting range	Min. unit	Factory default	Attribute
b0.32	User-defined proportion factor for velocity	0.01 ~ 100.00	0.01	1.00	RUN/ STOP
b0.33	PID reference / feedback coefficient	0.01 ~ 100.00	0.01	1.00	RUN/ STOP
b0.34 ~ b0.39	Reserved	–	–	–	–

System information

Function code	Name	Setting range	Min. unit	Factory default	Attribute
b0.40	Cumulative running time	0 ~ 65535 hours	1 hour	0	mpwd
b0.41 ~ b0.49	Reserved	–	–	–	–

17.2.3 Group b1: Basic Parameters

Basic running control

Function code	Name	Setting range	Min. unit	Factory default	Attribute
b1.00	First frequency setting source	0: Given by panel potentiometer 1: Given by panel digital setting 2: Given by external analog AIV 3: Given by external analog AIC 4: Set by external UP/DOWN terminals 5: Given via communication 6: Given by multi-speed	1	0	STOP
b1.01	Digital set frequency saving	0: Not saved when powered off and stopped 1: Not saved when powered off; saved when stopped 2: Saved when powered off; not saved when stopped 3: Saved when powered off and stopped	1	0	STOP
b1.02	First RUN command source	0: Inputting commands with panel 1: Inputting commands via external terminals 2: Inputting commands via communication	1	0	STOP
b1.03	Reserved	–	–	–	–
b1.04	Digital set frequency	[b1.07] ~ [b1.06]	0.01 Hz	50.00 Hz	RUN/ STOP
b1.05	Max. frequency	50.00 ~ 400.00 Hz	0.01 Hz	50.00 Hz	STOP
b1.06	Upper frequency	[b1.07] ~ [b1.05]	0.01 Hz	50.00 Hz	RUN/ STOP

Function code	Name	Setting range	Min. unit	Factory default	Attribute
b1.07	Lower frequency	0.00 ~ [b1.06]	0.01 Hz	0.00 Hz	RUN/ STOP
b1.08	Lower frequency mode	0: Running with 0 Hz 1: Run with lower frequency	1	0	STOP
b1.09	Hysteresis frequency width	0.00 ~ [b1.07]	0.01	0.00	STOP
b1.10	Direction control	0: Both directions 1: Forward only 2: Reverse only 3: Inverse default direction	1	0	STOP
b1.11	Operating panel control direction	0: Forward; 1: Reverse	1	0	RUN/ STOP
b1.12 ~ b1.14	Reserved	–	–	–	–
b1.15	Combination frequency command source	0: No combination 1: First frequency setting+ second frequency setting 2: First frequency setting - second frequency setting	1	0	STOP
b1.16	Second frequency setting source	0: Given by panel potentiometer 1: Given by panel digital setting 2: Given by external analog input voltage (AIV) 3: Given by external analog input current (AIC) 4: Set by external UP/DOWN terminals 5: Given via communication 6: Given by multi-speed	1	2	STOP

Function code	Name	Setting range	Min. unit	Factory default	Attribute
b1.17	Second RUN command source	0: Inputting commands with panel 1: Inputting commands via external terminals 2: Inputting commands via communication	1	1	STOP
b1.18 ~ b1.19	Reserved	–	–	–	–

Acceleration/deceleration control

Function code	Name	Setting range	Min. unit	Factory default	Attribute
b1.20	Acceleration time 1	0.1 ~ 6000.0s	0.1s	5.0s	RUN/ STOP
b1.21	Deceleration time 1	0.1 ~ 6000.0s	0.1s	5.0s	RUN/ STOP
b1.22	Acceleration / deceleration curve mode	0: Linear 1: S-curve	1	0	STOP
b1.23	S curve starting phase proportion	0.0 % ~ 40.0 %	0.1 %	20.0 %	STOP
b1.24	S curve stopping phase proportion	0.0 % ~ 40.0 %	0.1 %	20.0 %	STOP
b1.25 ~ b1.29	Reserved	–	–	–	–

Starting configuration

Function code	Name	Setting range	Min. unit	Factory default	Attribute
b1.30	Starting mode	0: Start directly 1: Braking before start 2: Start with speed capture	1	0	STOP
b1.31	Starting frequency	0.00 ~ 50.00 Hz	0.01 Hz	0.05 Hz	STOP
b1.32	Starting frequency holding time	0.0 ~ 20.0s	0.1s	0.1s	STOP
b1.33	Starting DC braking time	0.0 ~ 20.0s (0.0 represents no action of starting DC braking)	0.1s	0.0s	STOP
b1.34	Starting DC braking current	0.0 % ~ 150.0 % (Rated frequency converter current)	0.1 %	0.0 %	STOP
b1.35 ~ b1.39	Reserved	–	–	–	–

Stopping configuration

Function code	Name	Setting range	Min. unit	Factory default	Attribute
b1.40	Stopping mode	0: Deceleration to stop 1: Freewheeling to stop 2: Freewheeling under STOP-command, decelerating under direction change	1	0	STOP
b1.41	Stopping DC braking initial frequency	0.00 ~ 50.00 Hz	0.01 Hz	0.00 Hz	STOP
b1.42	Stopping DC braking time	0.0 ~ 20.0s (0.0 represents no action of stopping DC braking)	0.1s	0.0s	STOP

Function code	Name	Setting range	Min. unit	Factory default	Attribute
b1.43	Stopping DC braking current	0.0 % ~ 150.0 % (Rated frequency converter current)	0.1 %	0.0 %	STOP
b1.44	Reserved	–	–	–	–
b1.45	Over excitation gain	1.00 ~ 1.40	0.01	1.00	RUN/STOP
b1.46 ~ b1.49	Reserved	–	–	–	–

17.2.4 Group S0: V/F control

V/F curve

Function code	Name	Setting range	Min. unit	Factory default	Attribute
S0.00	V/F curve mode	0: Linear 1: Square curve 2: Self-defined multipoint curve	1	0	STOP
S0.01	V/F frequency 1	0.00 ~ [S0.03]	0.01 Hz	0.00 Hz	STOP
S0.02	V/F voltage 1	0.0 % ~ 120.0 % (Rated motor voltage)	0.10 %	0.00 %	STOP
S0.03	V/F frequency 2	[S0.01] ~ [S0.05]	0.01 Hz	0.00 Hz	STOP
S0.04	V/F voltage 2	0.0 % ~ 120.0 % (Rated motor voltage)	0.10 %	0.00 %	STOP
S0.05	V/F frequency 3	[S0.03] ~ [b1.05]	0.01 Hz	0.00 Hz	STOP
S0.06	V/F voltage 3	0.0 % ~ 120.0 % (Rated motor voltage)	0.10 %	0.00 %	STOP
S0.07 ~ S0.19	Reserved	–	–	–	–

Enhanced V/F control

Function code	Name	Setting range	Min. unit	Factory default	Attribute
S0.20	Rated motor slip frequency	0.00 ~ 20.00 Hz	0.01 Hz	0.00 Hz	RUN/ STOP
S0.21	Voltage boost	0.0 % ~ 20.0 % (0.0 means automatic torque boost)	0.1 %	5.0 %	RUN/ STOP
S0.22	I*R boost factor	0 % ~ 320 %	1 %	100 %	RUN/ STOP
S0.23	Reserved	–	–	–	–
S0.24	heavy load voltage stabilization	0: Disable 1: Enable	1	1	RUN/ STOP
S0.25 ~ S0.29	Reserved	–	–	–	–

No-trip control

Function code	Name	Setting range	Min. unit	Factory default	Attribute
S0.30	Current limitation control	0: OFF 1: OFF at constant speed 3: ON at constant speed	1	0	STOP
S0.31	Automatic current limitation level	20 % ~ 250 % (frequency converter rated current)	1 %	200 %	STOP
S0.32	Current regulator proportion factor	0.000 ~ 1.000	0.001	0.060	STOP
S0.33	Current regulator integrating time constant	0.001 ~ 10.000	0.001	0.200	STOP

17.2.5 Group S2: Motor and Encoder Parameters

Motor nameplate parameters

Function code	Name	Setting range	Min. unit	Factory default	Attribute
S2.00	Rated motor frequency	5.00 ~ 400.00 Hz	0.01 Hz	50.00 Hz	STOP
S2.01	Rated motor rotation speed	1 ~ 30000 rpm	1 rpm	on model	STOP
S2.02	Rated motor power	0.1 ~ 1000.0 kW	0.1 kW	on model	STOP
S2.03	Rated motor voltage	0 ~ 480 V	1 V	on model	STOP
S2.04	Rated motor current	0.01 ~ 655.00 A	0.01 A	on model	STOP
S2.05	Power-factor	0.50 ~ 0.95	0.01	on model	STOP
S2.06 ~ S2.09	Reserved	–	–	–	–

Motor physical data

Function code	Name	Setting range	Min. unit	Factory default	Attribute
S2.10	Stator resistance	0.00 ~ 50.00 Ω	0.01 Ω	on model	STOP
S2.11	Rotator resistance	0.00 ~ 50.00 Ω	0.01 Ω	on model	STOP
S2.12	Leakage inductance	0.00 ~ 200.00 mH	0.01 mH	on model	STOP
S2.13	Mutual inductance	0.0 ~ 3000.0 mH	0.1 mH	on model	STOP
S2.14	No-load current	0.0 ~ [S2.04]	0.1A	on model	STOP
S2.15	Physical data calculation	0: No action 1: Calculation 2: Auto tuning while motor is in static 3: Auto tuning while motor is rotating	1	0	STOP
S2.16 ~ S2.19	Reserved	–	–	–	–

Motor thermal protection

Function code	Name	Setting range	Min. unit	Factory default	Attribute
S2.20	Sensor type	0: PTC; 1: NTC	1	0	STOP
S2.21	Input channel of motor temperature	0: Invalid; 1: AIV	1	0	
S2.22	Protection level	0.0 ~ 10.0	0.1	2.0	STOP
S2.23	Thermal motor time constant	0.0 ~ 400.0 min	0.1	on model	STOP
S2.24 ~ S2.29	Reserved	–	–	–	–

Encoder

Function code	Name	Setting range	Min. unit	Factory default	Attribute
S2.30 ~ S2.39	Reserved	–	–	–	–

17.2.6 Group S3: Running Parameters

Jogging parameters

Function code	Name	Setting range	Min. unit	Factory default	Attribute
S3.00	Jogging frequency	0.00 ~ [b1.05]	0.01 Hz	5.00 Hz	RUN/ STOP
S3.01	Jogging acceleration time	0.1 ~ 6000.0s	0.1s	5.0s	RUN/ STOP
S3.02	Jogging deceleration time	0.1 ~ 6000.0s	0.1s	5.0s	RUN/ STOP
S3.03 ~ S3.04	Reserved	–	–	–	–

Skip frequency

Function code	Name	Setting range	Min. unit	Factory default	Attribute
S3.05	Skip frequency 1	0.00 ~ [b1.06]	0.01 Hz	0.00 Hz	STOP
S3.06	Skip frequency 2	0.00 ~ [b1.06]	0.01 Hz	0.00 Hz	STOP
S3.07	Skip frequency 3	0.00 ~ [b1.06]	0.01 Hz	0.00 Hz	STOP
S3.08	Skip frequency range	0.00 ~ 30.00 Hz	0.01 Hz	0.00 Hz	STOP
S3.09	Skip frequency window acceleration factor	1~100	1	1	STOP
S3.10 ~ S3.14	Reserved	–	–	–	–

Restarting after power fault

Function code	Name	Setting range	Min. unit	Factory default	Attribute
S3.15	Restarting after power fault	0: Prohibited 1: Allowed	1	0	STOP
S3.16	Waiting time for restarting after power fault	0.0 ~ 10.0s	0.1s	1.0s	STOP
S3.17 ~ S3.19	Reserved	–	–	–	–

Brake chopper control

Function code	Name	Setting range	Min. unit	Factory default	Attribute
S3.20	Brake chopper action point	200 V class: 300 ~ 390 V 400 V class: 600 ~ 885 V	1 V	390 V 885 V	STOP
S3.21	Braking ratio	1 % ~ 100 %	1 %	100 %	STOP
S3.22 ~ S3.29	Reserved	–	–	–	–

Additional running control

Function code	Name	Setting range	Min. unit	Factory default	Attribute
S3.30	Forward and reverse rotation dead zone time	0.0 ~ 60.0s	0.1s	4.0s	STOP
S3.32	UP/DOWN set velocity	0.10 ~ 100.00 Hz/s	0.01 Hz/s	1.00 Hz/s	RUN/ STOP
S3.33	UP/DOWN terminals initial frequency	[b1.07] ~ [b1.06]	0.01 Hz	0.00 Hz	RUN/ STOP
S3.34	Fan control	0: Automatically controlled 1: Always on	1	0	RUN/ STOP
S3.35	Stopping with **Stop** key	0: Only valid for control with keyboard 1: Valid for all control means	1	1	RUN/ STOP

17.2.7 Group E0: Input Terminals

Multi-function digital input terminals

Function code	Name	Setting range	Min. unit	Factory default	Attribute
E0.00	2-wire/3-wire running control	0: Forward/stop, reverse/stop 1: Forward/reverse, run/stop 2: 3-wire control	1	0	STOP
E0.01	X1 terminal	0 ~ 28	1	0	STOP
E0.02	X2 terminal		1	0	STOP
E0.03	X3 terminal		1	0	STOP
E0.04	X4 terminal		1	0	STOP
E0.05	X5 terminal		1	0	STOP
E0.06 ~ E0.09	Reserved	–	–	–	–

Setting range of [E0.01] ~ [E0.05] is as below:

0: No action (multiple choices allowed)

1: Multi-speed control terminal 1

2: Multi-speed control terminal 2
3: Multi-speed control terminal 3
4: Reserved
5: Acceleration/deceleration time terminal 1
6: Acceleration/deceleration time terminal 2
7: 3-wire running control
8: Freewheeling to stop enabled
9: Frequency increment UP command
10: Frequency decrement DOWN command
11: Zeroing of external terminal frequency setting
12: Reserved
13: Stopping DC braking enabled
14: Reserved
15: Simple PLC prohibited
16: Simple PLC paused
17: Reserved
18: Second frequency command source enabled
19: External fault NO contact input
20: External fault NC contact input
21: External RESET input
22: Second run command source enable
23: Forward (FWD)
24: Reverse (REV)
25: Forward jog
26: Reverse jog
27: Counting input
28: Counting clear

Analog input channel gain

Function code	Name	Setting range	Min. unit	Factory default	Attribute
E0.10	Analog input voltage (AIV) channel gain k1	0.00 ~ 10.00	0.01	1.00	RUN/STOP
E0.11	Reserved	–	–	–	–
E0.12	Analog input current (AIC) channel gain k3	0.00 ~ 10.00	0.01	1.00	RUN/STOP
E0.13 ~ E0.14	Reserved	–	–	–	–

Analog input filtering time

Function code	Name	Setting range	Min. unit	Factory default	Attribute
E0.15	Analog channel filtering time	0.000 ~ 2.000s	0.001s	0.100s	RUN/ STOP
E0.16 ~ E0.19	Reserved	–	–	–	–

Analog input curve configuration

Function code	Name	Setting range	Min. unit	Factory default	Attribute
E0.20	Analog setting curve selection	0 ~ 3 0 = AIC-reference characteristic curve 1; AIV-reference characteristic curve 1 1 = AIC-reference characteristic curve 1; AIV-reference characteristic curve 2 2 = AIC-reference characteristic curve 2; AIV-reference characteristic curve 1 3 = AIC-reference characteristic curve 2; AIV-reference characteristic curve 2	1	0	RUN/ STOP
E0.21	Curve 1 min. reference	0.0 % ~ [E0.23]	0.10 %	0.00 %	RUN/ STOP
E0.22	Frequency corresponding to curve 1 min. reference	0.00 ~ [b1.06]	0.01 Hz	0.00 Hz	RUN/ STOP
E0.23	Curve 1 max. reference	[E0.21] ~ 100.0 %	0.10 %	100.00 %	RUN/ STOP
E0.24	Frequency corresponding to curve 1 max. reference	0.00 ~ [b1.06]	0.01 Hz	50.00 Hz	RUN/ STOP
E0.25	Curve 2 min. reference	0.0 % ~ [E0.27]	0.10 %	0.00 %	RUN/ STOP
E0.26	Frequency corresponding to curve 2 min. reference	0.00 ~ [b1.06]	0.01 Hz	0.00 Hz	RUN/ STOP
E0.27	Curve 2 max. reference	[E0.25] ~ 100.0 %	0.10 %	100.00 %	RUN/ STOP

Function code	Name	Setting range	Min. unit	Factory default	Attribute
E0.28	Frequency corresponding to curve 2 max. reference	0.00 ~ [b1.06]	0.01 Hz	50.00 Hz	RUN/ STOP
E0.29 ~ E0.39	Reserved	–	–	–	–

17.2.8 Group E1: Output Terminals

Multi-function output terminals

Function code	Name	Setting range	Min. unit	Factory default	Attribute
E1.00	OC output	0: Frequency converter ready for running	1	1	STOP
E1.01	Reserved		–	–	–
E1.02	Relay output	1: Frequency converter in running 2: DC braking indication 3: Frequency converter running at zero speed 4: Frequency/speed arrival signal 5: Frequency level detection signal (FDT1) 6: Frequency level detection signal (FDT2) 7: Simple PLC phase completion indication 8: Simple PLC cycle completion indication 9: Reserved 10: Under-voltage indication 11: Frequency converter overload pre-warning 12: Motor overload pre-warning 13: Stopped by external fault 14: Fault output 15: Reserved 16: Target counter value reached 17: Middle counter value reached	1	1	STOP
E1.03	Reserved	–	–	–	–

Frequency detection

Function code	Name	Setting range	Min. unit	Factory default	Attribute
E1.04	Frequency arriving at detection width	0.00 ~ 400.0	0.01	2.50	RUN/STOP
E1.05	Frequency detection level FDT1	0.00 ~ 400.0	0.01	50.00	RUN/STOP
E1.06	Frequency detection level FDT1 width	0.00 ~ [E1.05]	0.01	1.00	RUN/STOP
E1.07	Frequency detection level FDT2	0.00 ~ 400.0	0.01	25.00	RUN/STOP
E1.08	Frequency detection level FDT2 width	0.00 ~ [E1.07]	0.01	1.00	RUN/STOP

Overload pre-protection

Function code	Name	Setting range	Min. unit	Factory default	Attribute
E1.09	Frequency converter overload pre-warning level setting	20.0 % ~ 200.0 % (Rated frequency converter current)	0.1 %	110.0 %	STOP
E1.10	Motor overload pre-warning level setting	100.0 % ~ 250.0 % (Rated motor current)	0.1 %	100.0 %	RUN/ STOP
E1.11	Frequency converter overload pre-warning delay	0.0 ~ 20.0	0.1	2.0	STOP
E1.12	Motor overload pre-warning delay	0.0 ~ 20.0	0.1	2.0	RUN/ STOP

External signal counter

Function code	Name	Setting range	Min. unit	Factory default	Attribute
E1.13	Middle count value	0 ~ [E1.14]	1	0	RUN/ STOP
E1.14	Target count value	[E1.13] ~ 9999	1	0	RUN/ STOP
E1.15 ~ E1.29	Reserved	–	–	–	–

Analog output terminal

Function code	Name	Setting range	Min. unit	Factory default	Attribute
E1.30	FM1 analog output selection	0: Running frequency 1: Set frequency 2: Output current 3: Reserved 4: Output voltage 5: Output power 6: Analog input voltage 7: Analog input current	1	0	RUN/ STOP
E1.31	FM1 channel mode	0: 0 ~ 10 V 1: 2 ~ 10 V	1	0	RUN/ STOP
E1.32	FM1 gain setting	0.00 ~ 10.00	0.01	1.00	RUN/ STOP
E1.33 ~ E1.40	Reserved	–	–	–	–

17.2.9 Group E2: Multi-speed and Simple PLC

Acceleration/deceleration time 2, 3 and 4

Function code	Name	Setting range	Min. unit	Factory default	Attribute
E2.00	Acceleration time 2	0.1 ~ 6000.0s	0.1s	10.0s	RUN/ STOP
E2.01	Deceleration time 2	0.1 ~ 6000.0s	0.1s	10.0s	RUN/ STOP
E2.02	Acceleration time 3	0.1 ~ 6000.0s	0.1s	10.0s	RUN/ STOP
E2.03	Deceleration time 3	0.1 ~ 6000.0s	0.1s	10.0s	RUN/ STOP
E2.04	Acceleration time 4	0.1 ~ 6000.0s	0.1s	10.0s	RUN/ STOP
E2.05	Deceleration time 4	0.1 ~ 6000.0s	0.1s	10.0s	RUN/ STOP
E2.06 ~ E2.09	Reserved	–	–	–	–

Multi-speed frequency

Function code	Name	Setting range	Min. unit	Factory default	Attribute
E2.10	Multi-speed frequency 1	0.00 ~ [b1.06]	0.01 Hz	0.00 Hz	RUN/ STOP
E2.11	Multi-speed frequency 2	0.00 ~ [b1.06]	0.01 Hz	0.00 Hz	RUN/ STOP
E2.12	Multi-speed frequency 3	0.00 ~ [b1.06]	0.01 Hz	0.00 Hz	RUN/ STOP
E2.13	Multi-speed frequency 4	0.00 ~ [b1.06]	0.01 Hz	0.00 Hz	RUN/ STOP
E2.14	Multi-speed frequency 5	0.00 ~ [b1.06]	0.01 Hz	0.00 Hz	RUN/ STOP
E2.15	Multi-speed frequency 6	0.00 ~ [b1.06]	0.01 Hz	0.00 Hz	RUN/ STOP

Function code	Name	Setting range	Min. unit	Factory default	Attribute
E2.16	Multi-speed frequency 7	0.00 ~ [b1.06]	0.01 Hz	0.00 Hz	RUN/ STOP
E2.17 ~ E2.19	Reserved	–	–	–	–

Simple PLC basic control

Function code	Name	Setting range	Min. unit	Factory default	Attribute
E2.30	Simple PLC running mode	0: No action 1: Mode 1 2: Mode 2 3: Mode 3	1	0	STOP
E2.31	Simple PLC time multiple	1 ~ 60	1	1	STOP
E2.32 ~ E2.34	Reserved	–	–	–	–

PLC stage control

Function code	Name	Setting range	Min. unit	Factory default	Attribute
E2.35	Stage 0 action selection	011, 012, 013, 014 021, 022, 023, 024 031, 032, 033, 034 041, 042, 043, 044 111, 112, 113, 114 121, 122, 123, 124 131, 132, 133, 134 141, 142, 143, 144	1	011	STOP
E2.36	Stage 0 running time	0.0 ~ 6000.0s	0.1s	20.0s	STOP
E2.37	Stage 1 action selection	See "Stage 0 action selection"	1	011	STOP

Function code	Name	Setting range	Min. unit	Factory default	Attribute
E2.38	Stage 1 running time	0.0 ~ 6000.0s	0.1s	20.0s	STOP
E2.39	Stage 2 action selection	See "Stage 0 action selection"	1	011	STOP
E2.40	Stage 2 running time	0.0 ~ 6000.0s	0.1s	20.0s	STOP
E2.41	Stage 3 action selection	See "Stage 0 action selection"	1	011	STOP
E2.42	Stage 3 running time	0.0 ~ 6000.0s	0.1s	20.0s	STOP
E2.43	Stage 4 action selection	See "Stage 0 action selection"	1	011	STOP
E2.44	Stage 4 running time	0.0 ~ 6000.0s	0.1s	20.0s	STOP
E2.45	Stage 5 action selection	See "Stage 0 action selection"	1	011	STOP
E2.46	Stage 5 running time	0.0 ~ 6000.0s	0.1s	20.0s	STOP
E2.47	Stage 6 action selection	See "Stage 0 action selection"	1	011	STOP
E2.48	Stage 6 running time	0.0 ~ 6000.0s	0.1s	20.0s	STOP
E2.49	Stage 7 action selection	See "Stage 0 action selection"	1	011	STOP
E2.50	Stage 7 running time	0.0 ~ 6000.0s	0.1s	20.0s	STOP
E2.51 ~ E2.70	Reserved	–	–	–	–

17.2.10 Group E3: PID Function

PID basic configuration

Function code	Name	Setting range	Min. unit	Factory default	Attribute
E3.00	PID reference channel	0: No PID control 1: Panel potentiometer 2: Panel digital setting 3: Analog input AIV 4: Analog input AIC 5: Analog digital setting [E3.03] 6: Rotation speed digital setting [E3.04] 7: Communication	1	0	STOP
E3.01	PID feedback channel	0: AIC 1: AIV	1	0	STOP
E3.02	Reserved	–	–	–	–
E3.03	Analog digital setting	0.00 ~ 10.00 V	0.01	0.00	RUN/ STOP
E3.04	Rotation speed digital setting	0 ~ 30000 rpm	1 rpm	0 rpm	RUN/ STOP
E3.05 ~ E3.09	Reserved	–	–	–	–

PID control

Function code	Name	Setting range	Min. unit	Factory default	Attribute
E3.10	P: Proportional gain	0.0 ~ 10.000	0.001	1.500	RUN/ STOP
E3.11	Ti: Integral time	0.00 ~ 100.00s (0.00 represents no integral)	0.01s	0.00s	RUN/ STOP

Function code	Name	Setting range	Min. unit	Factory default	Attribute
E3.12	Td: Derivative time	0.00 ~ 100.00s (0.00 represents no derivative)	0.01s	0.00s	RUN/ STOP
E3.13	T: Sampling period	0.01 ~ 100.00s	0.01s	0.50s	RUN/ STOP
E3.14	Deviation limit	0.0 % ~ 20.0 % (closed loop reference value)	0.1 %	2.0 %	RUN/ STOP
E3.15	PID regulation mode	0: Stop integral adjustment, when frequency arriving at upper/lower limit 1: Continue integral adjustment, when frequency arriving at upper/lower limit	1	0	RUN/ STOP

17.2.11 Group E4: Protection and Fault

Protection configuration

Function code	Name	Setting range	Min. unit	Factory default	Attribute
E4.00	Reserved	–	–	–	–
E4.01	Overvoltage prevention setting	0: both disabled 1: Stall protection enabled, braking disabled 2: Stall protection disabled, braking enabled	1	0	STOP
E4.02	Stall overvoltage prevention level	200V class: 300 ~ 390 V 400V class: 600 ~ 885 V	1 V	390 V 885 V	STOP
E4.03	Stall overcurrent prevention level	20.0 % ~ 200.0 % (Rated frequency converter output current)	0.1 %	200.0 %	STOP
E4.04	Low speed derating frequency	0.10 ~ 300.00 Hz	0.01 Hz	25.00 Hz	RUN/ STOP
E4.05	Zero speed load	25.0 % ~ 100.0 %	0.1%	25.0 %	RUN/ STOP

Function code	Name	Setting range	Min. unit	Factory default	Attribute
E4.06	Phase loss protection	0: Both input and output phase loss protection active 1: Only input phase loss protection active 2: Only output phase loss protection active 3: Both input and output phase loss protection inactive	1	3	RUN/ STOP
E4.07 ~ E4.14	Reserved	–	–	–	–

Fault reset

Function code	Name	Setting range	Min. unit	Factory default	Attribute
E4.15	Number of fault reset attempts	0 ~ 3 (0: No auto reset)	1	0	STOP
E4.16	Interval between reset attempts	2 ~ 60s	1s	10s	STOP
E4.17 ~ E4.19	Reserved	–	–	–	–

Error code memory

Function code	Name	Setting range	Min. unit	Factory default	Attribute
E4.20	Last fault type	0 ~ 51	1	0	read only
E4.21	Second last fault type		1	0	read only
E4.22	Third last fault type		1	0	read only
E4.23 ~ E4.29	Reserved	–	–	–	–

- 0: No error
- 1: OC-1, means overcurrent happens when constant speed running
- 2: OC-2, means overcurrent happens when acceleration
- 3: OC-3, means overcurrent happens when deceleration
- 4: OE-1, means overvoltage happens when constant speed running
- 5: OE-2, means overvoltage happens when acceleration

- 6: OE-3, means overvoltage happens when deceleration
- 7: OL-1, means frequency converter overload
- 8: OL-2, means motor overload
- 9: EEP-, read/write EEP error, when read and write EEP/flash, error happens
- 10: SPI-, internal communication error
- 11: E-St, external fault
- 12: RS-, external communication error
- 13: CF, circuit fault, when there is something wrong with current detection
- 14: Reserved
- 15: OT, motor over temperature
- 16: CPU-, CPU is disturbed by external signal and program run to illegal address
- 17: SC, short circuit of IGBT happens
- 18: IPHL, input phase loss
- 19: OPHL, output phase loss
- 20: OH, frequency converter over temperature
- 21: PRSE, parameter set error

System status at the latest fault

Function code	Name	Setting range	Min. unit	Factory default	Attribute
E4.30	Output frequency at latest fault	0.00 ~ [b1.05]	0.01	0.00	read only
E4.31	Setting frequency at latest fault	0.00 ~ [b1.05]	0.01	0.00	read only
E4.32	Output current at latest fault	0.0 ~ 1000.0	0.1	0.0	read only
E4.33	Output voltage at latest fault	0 ~ 1000 V	1	0	read only
E4.34	DC bus voltage at latest fault	0 ~ 1000 V	1	0	read only
E4.35	Module temperature at latest fault	–	1	0	read only

17.2.12 Group H0: Communication

General communication configuration

Function code	Name	Setting range	Min. unit	Factory default	Attribute
H0.00	Communication protocol	0: ModBus	1	0	STOP
H0.01	Baud rate	0: 1200 bps 1: 2400 bps 2: 4800 bps 3: 9600 bps 4: 19200 bps 5: 38400 bps	1	3	STOP
H0.02	Data format	0: N, 8, 1 (1 start bit, 8 data bits, 1 stop bit, no check) 1: E, 8, 1 (1 start bit, 8 data bits, 1 stop bit, even parity) 2: O, 8, 1 (1 start bit, 8 data bits, 1 stop bit, odd parity) 2: N, 8, 2 (1 start bit, 8 data bits, 1 stop bit, no parity)	1	0	STOP
H0.03	Local address	1 ~ 247	1	1	STOP
H0.04 ~ H0.07	Reserved	–	–	–	–
H0.08	Communication disruption detection time	0.0 (invalid), 0.1 ~ 60.0s	0.1s	0.0s	STOP
H0.09	Communication disruption action	0: Freewheeling stop 1: Keep running	1	1	STOP

17.2.13 Group D: Monitoring Parameters

Monitoring parameters

Function code	Name	Setting range	Min. unit	Factory default	Attribute
d0.00	Output frequency	0.00 ~ 400.0	0.01 Hz	0	read only
d0.01	Output velocity	0 ~ 65535	rps	0	read only
d0.02	Setting frequency	0.00 ~ 400.0	0.01 Hz	0	read only
d0.03	Setting velocity	0 ~ 65535	1	0	read only
d0.04	Output voltage	0 ~ 480	1 V	0	read only
d0.05	Output current	0.0 ~ 1000.0	0.1 A	0	read only
d0.06	Output power	0.0 ~ 1000.0	0.1 kW	0	read only
d0.07	DC bus voltage	0 ~ 800	1 V	0	read only
d0.08	Analog input AIV	0.0 ~ 10.0	0.1 V	0	read only
d0.09	Analog input AIC	0.0 ~ 20.0	0.1 mA	0	read only
d0.10	Self-defined setting velocity	0.0 ~ 6000.0	0.1	0	read only
d0.11	Self-defined output velocity	0.0 ~ 6000.0	0.1	0	read only
d0.12	Digital input status	0 ~ 31	1	0	read only
d0.13	Digital output status	0 ~ 3	1	0	read only
d0.14	PID reference engineer value	0.0 ~ 6000.0	0.1	0	read only
d0.15	PID feedback engineer value	0.0 ~ 6000.0	0.1	0	read only
d0.16	Module temperature	–	1	0	read only
d0.17	Software version 1	0.00 ~ 99.99	0.01	*	read only
d0.18	Software version 2	0.00 ~ 99.99	0.01	*	read only
d0.19	Software version 3	0.00 ~ 99.99	0.01	*	read only
d0.20	Actual carrier frequency	1 ~ 15	1 kHz	*	read only

17.3 Appendix 3: Type Coding

17.3.1 EFC 3600 Type Coding

Short text Column	1	2	3	4	5	6	7	8	9	10	11	12	13	14	15	16	17	18	19	20	21	22	23	24	25	26	27	28
Example:	E	F	C	3	6	0	0	-	0	K	4	0	-	1	P	2	-	M	D	A	-	7	P	-	N	N	N	N

Product
EFC.....= EFC

Motor control
Enhanced V/f control.....= 3

Line
General.....= 6

Design
Standard.....= 0

Option
Standard.....= 0

Power
E.g., 400 W.....= 0K40

Phases
Single phase.....= 1P
Three phases.....= 3P

Mains connecting voltage
200 V.....= 2

Communication module
ModBus.....= M

EMC filter
Industrial area, class C3.....= D

Degree of protection
IP 20.....= A

Display
Seven-segment display.....= 7

Display design
With potentiometer.....= P

Other design
None.....= NNNN

Fig.17-1: EFC 3600 type coding

Appendix

17.3.2 Type Coding of EFC 3600 Function Modules

Operating Panel Type Coding

Short text Column	1	2	3	4	5	6	7	8	9	10	11	12	13	14	15	16	17	18	19	20	21
Example:	F	P	C	C	0	1	.	1	-	E	B	N	N	-	7	P	-	N	N	N	N

Product
FPCC.....= FPCC

Line
01.....= 01

Design
1.....= 1

Version
Extended.....= E

Performance
Basic.....= B

Customer design
None.....= NN

Display
Seven-segment display.....= 7

Display version
With potentiometer.....= P

Other design
None.....= NNNN

Fig.17-2: Operating panel type coding

17.3.3 Type Coding of EFC 3600 Accessories

Braking Resistor Type Coding

Short text Column	1	2	3	4	5	6	7	8	9	10	11	12	13	14	15	16	17	18	19	20	21	22	23	24	25	26	27	28	29	30	31
Example:	F	E	L	R	0	1	.	1	N	-	0	0	8	0	-	N	7	5	0	R	-	D	-	5	6	0	-	N	N	N	N

Product
FELR.....= FELR

Line
01.....= 01

Design
1.....= 1

Mounting mode
Free mounting solution.....= N

Rated power
E.g., 80 W.....= 0080

Additional option
None.....= N

Resistance
E.g., 750R.....= 750R

Degree of protection
IP 33 .....= D
IP 20 .....= A

DC bus nominal voltage
560 VDC.....= 560

Other design
None.....= NNNN

Fig.17-3: Braking resistor type coding

Appendix

Interface Adapter Type Coding

Short text Column	1	2	3	4	5	6	7	8	9	10	1	2	3	4	5	6	7	8	9	20	1	2	3	4	5	6	7	8
Example:	F	E	A	A	0	2	.	1	-	M	O	D	B	*	-	P	R	O	F	I	-	N	N	N	N	-	N	N

Product
Interface adapter.....= FEAA

Line
02.....= 02

Design
1.....= 1

Input
ModBus.....= MODB*
RS485.....= RS485

Output
PROFIBUS.....= PROFI
RS232.....= RS232

Cable
Without cable.....= NNNN

Other design
None.....= NN

Fig.17-4: Interface adapter type coding

Interface Adapter Cable Type Coding

Short text Column	1	2	3	4	5	6	7	8	9	10	1	2	3	4
Example:	F	R	K	B	0	0	0	2	/	0	0	5	,	0

Product
Interface Adapter cable.....FRKB

Cable number
ModBus至RS485.....= 0002

Length
5 m.....= 005,0

Fig.17-5: Interface adapter cable type coding

Operating Panel Cable Type Coding

Short text Column	1	2	3	4	5	6	7	8	9	10	11	12	13	14
Example:	F	R	K	S	0	0	0	1	/	0	0	1	,	0

Product
Operating panel cable.....FRKS

Cable number
E.g., 1.....= 0001

Length
1 m.....= 000,1
3 m.....= 000,3

Fig.17-6: Operating panel cable type coding

Index

Symbols

1-phase 200 VAC Class..... 28
3-phase 400 VAC Class..... 29

A

Accessories..... 166
Accessories for Control Cabinet Mounting..... 171
Analog Input Terminals..... 41
Appendix..... 195
Appendix 1: Abbreviations..... 195
Appendix 2: Parameter List..... 195
Appendix 3: Type Coding..... 225
Appropriate Use..... 19

B

Block Diagram..... 28
Brake Resistor..... 166
Brake Resistor in Aluminium Housing..... 169
Brake Resistor Selection..... 166
Braking Resistor Type Coding..... 227
Brief introduction..... 172
Brief Introduction..... 172

C

Cable and Fuse Dimensions..... 34
Cable for RS485/RS232 Adapter.... 171
Causes of noise emission..... 150
Chapters and Contents..... 9
Check and Preparation before Commissioning..... 47
Checking Information on Frequency Converter Nameplate..... 21
Checking Information on Packing Nameplate..... 20
Commissioning..... 47
Commissioning Process..... 48
Communication Interface..... 171
Communication Mapping Register Address Distribution..... 181
Communication Networking..... 185
Communication Protocols..... 172

C

Control cabinet mounting according to interference areas – exemplary arrangements..... 159
Control Circuit Terminals..... 37
Control Circuit Terminals Description 38
Control Circuit Wiring Steps..... 42

D

Declarations on Property Loss and Product Damage..... 11
Delivery and Storage..... 20
Derating and Ambient Temperature 145
Derating and Mains Voltage..... 145
Derating and Output Current..... 146
Derating of Electrical Data..... 145
Description of Attribute Symbols in Parameter Tables..... 195
Design and installation in area A – interference-free area of control cabinet..... 160
Design and installation in area B – interference –susceptible area of control cabinet..... 162
Design and installation in area C – strongly interference-susceptible area of control cabinet..... 163
Diagnosis..... 124
Disposal..... 194
Disposal and Environmental Protection..... 194

E

EFC 3600 Basic Parameter Fast Settings..... 50
EFC 3600 Dimension Figure..... 23
EFC 3600 Dimensions..... 25
EFC 3600 Mounting..... 26
EFC 3600 Type Coding..... 225
Electrical Parameter..... 144
Electromagnetic Compatibility (EMC)..... 147
EMC Measures for Design and Installation..... 156

Index

E

EMC-optimal installation in facility and control cabinet..... 157
EMC Requirements..... 147
Ensuring the EMC Requirements.... 154
Environmental Protection..... 194
Error code and exception code..... 180
Example of Operating Panel Operation..... 46
Explanation of Safety Symbols and Degrees of Hazard Seriousness 12

F

Feedback..... 10
Figure and Description..... 43

G

General Information..... 10
General Technical Data..... 141
Ground connections..... 163
Group b0: System Parameters.. 53, 195
Group b1: Basic Parameters..... 59, 199
Group D: Monitoring Parameters.... 224
Group E0: Input Terminal Parameters..... 91
Group E0: Input Terminals..... 208
Group E1: Output Terminal Parameters..... 100
Group E1: Output Terminals..... 213
Group E2: Multi-speed and Simple PLC..... 107, 216
Group E3: PID Control..... 111
Group E3: PID Function..... 219
Group E4: Error and Protection..... 115
Group E4: Protection and Fault..... 220
Group H0: Communication..... 122, 223
Group S0: V/F control..... 73, 203
Group S2: Motor and Encoder Parameters..... 82, 205
Group S3: Running Parameters 85, 206

H

Hazards by Improper Use..... 12

I

Important Directions for Use..... 19
Inappropriate Use..... 19
Installing signal lines and signal cables..... 164
Instructions with Regard to Specific Dangers..... 13
Interface..... 173
Interface Adapter Cable Type Coding..... 228
Interface Adapter Type Coding..... 228
Introduction to the Documentation..... 9

L

LED Indicator..... 44
Limit values for line-based disturbances..... 150

M

Main Circuit Terminals..... 33
Main Circuit Terminals Description.... 33
Main Circuit Wiring Diagram..... 32
Main Circuit Wiring Steps..... 36
Materials contained in the electronic devices..... 194
Menu Structure..... 45
Minimum immunity requirements for PDSs intended for use in the first environment..... 149
Minimum immunity requirements for PDSs intended for use in the second environment..... 148
ModBus Communication Example.. 184
ModBus Function Codes and Message Format..... 174
ModBus Protocol..... 172
Mounting and Installation..... 23

N

Networking..... 185
Noise emission of the drive system. 150
Noise immunity in the drive system. 147
Notes on Control Circuit Wiring..... 37
Notes on Main Circuit Wiring..... 30

N

NPN / PNP Switch SW for the Digital Inputs..... 39
NPN and PNP Modes..... 40
NPN and PNP modes..... 40

O

Operating Panel..... 43
Operating Panel Cable for Control Cabinet Mounting..... 171
Operating Panel Cable Type Coding..... 229
Operating Panel Type Coding..... 226

P

Packaging materials..... 194
Parameter Settings..... 53
Product Identification..... 20
Protection Against Contact with Hot Parts..... 17
Protection Against Dangerous Movements..... 15
Protection Against Electric Shock by Protective Low Voltage (PELV)..... 15
Protection Against Magnetic and Electromagnetic Fields During Operation and Mounting..... 16
Protection During Handling and Mounting..... 18
Protocol Description..... 172

Q

Qualifications of Operating Personnel..... 11

R

Recommendation for Design of the Fuses..... 36

R

Recommendation on Cable Dimensioning..... 35
Recommendations on Control Circuit Wiring..... 41
Recommendations on networking… 185
Recycling..... 194
Restore Parameters to Factory Defaults..... 51
RS485/RS232 Adapter..... 171

S

Safety Instructions for Electric Drives and Controls..... 10
Selection Standards..... 34
Service and Support..... 193
Seven-segment Display..... 43
Solutions for Simple Faults during Commissioning..... 52
Special Notes..... 184
Storage of the Components..... 22
Supported Functions..... 174

T

Technical Data..... 141
The Scope of Supply 21
Transmission..... 172
Transport of the Components..... 22
Type Coding of EFC 3600 Accessories..... 227

V

Visual Inspection of the Frequency Converter..... 21

Notes

Rexroth
Bosch Group

Bosch Rexroth (Xi'an)
Electric Drives and Controls Co., Ltd.
No. 3999, Shangji Road,
Economic and Technological Development
Zone, 710021 Xi'an, P.R. China
Phone +49 9352 40 5060
Fax +49 9352 18 4941
service.svc@boschrexroth.de
www.boschrexroth.com