Smarter. Greener. Together.

Industrial Automation Headquarters

Delta Electronics, Inc.
Taoyuan Technology Center
No.18, Xinglong Rd., Taoyuan District,
Taoyuan City 33068, Taiwan
TEL: 886-3-362-6301 / FAX: 886-3-371-6301

Asia

Delta Electronics (Shanghai) Co., Ltd.
No.182 Minyu Rd., Pudong Shanghai, P.R.C.
Post code : 201209
TEL: 86-21-6872-3988 / FAX: 86-21-6872-3996
Customer Service: 400-820-9595

Delta Electronics (Japan), Inc.
Tokyo Office
Industrial Automation Sales Department
2-1-14 Shibadaimon, Minato-ku
Tokyo, Japan 105-0012
TEL: 81-3-5733-1155 / FAX: 81-3-5733-1255

Delta Electronics (Korea), Inc.
Seoul Office
1511, 219, Gasan Digital 1-Ro., Geumcheon-gu,
Seoul, 08501 South Korea
TEL: 82-2-515-5305 / FAX: 82-2-515-5302

Delta Energy Systems (Singapore) Pte Ltd.
4 Kaki Bukit Avenue 1, #05-04, Singapore 417939
TEL: 65-6747-5155 / FAX: 65-6744-9228

Delta Electronics (India) Pvt. Ltd.
Plot No.43, Sector 35, HSIIDC Gurgaon,
PIN 122001, Haryana, India
TEL: 91-124-4874900 / FAX : 91-124-4874945

Delta Electronics (Thailand) PCL.
909 Soi 9, Moo 4, Bangpoo Industrial Estate (E.P.Z),
Pattana 1 Rd., T.Phraksa, A.Muang,
Samutprakarn 10280, Thailand
TEL: 66-2709-2800 / FAX : 662-709-2827

Delta Electronics (Australia) Pty Ltd.
Unit 20-21/45 Normanby Rd., Notting Hill Vic 3168, Australia
TEL: 61-3-9543-3720

Americas

Delta Electronics (Americas) Ltd.
Raleigh Office
P.O. Box 12173, 5101 Davis Drive,
Research Triangle Park, NC 27709, U.S.A.
TEL: 1-919-767-3813 / FAX: 1-919-767-3969

Delta Electronics Brazil
São Paulo Sales Office
Rua Itapeva, 26 - 3°, andar Edificio Itapeva,
One - Bela Vista 01332-000 - São Paulo - SP - Brazil
TEL: 55-12-3932-2300 / FAX: 55-12-3932-237

Delta Electronics International Mexico S.A. de C.V.
Mexico Office
Gustavo Baz No. 309 Edificio E PB 103
Colonia La Loma, CP 54060
Tlalnepantla, Estado de México
TEL: 52-55-3603-9200

EMEA

Headquarters: Delta Electronics (Netherlands) B.V.
Sales: Sales.IA.EMEA@deltaww.com
Marketing: Marketing.IA.EMEA@deltaww.com
Technical Support: iatechnicalsupport@deltaww.com
Customer Support: Customer-Support@deltaww.com
Service: Service.IA.emea@deltaww.com
TEL: 31(0)40 800 3900

BENELUX: Delta Electronics (Netherlands) B.V.
De Witbogt 20, 5652 AG Eindhoven, The Netherlands
Mail: Sales.IA.Benelux@deltaww.com
TEL: 31(0)40 800 3900

DACH: Delta Electronics (Netherlands) B.V.
Coesterweg 45, D-59494 Soest, Germany
Mail: Sales.IA.DACH@deltaww.com
TEL: 49(0)2921 987 0

France: Delta Electronics (France) S.A.
ZI du bois Challand 2, 15 rue des Pyrénées,
Lisses, 91090 Evry Cedex, France
Mail: Sales.IA.FR@deltaww.com
TEL: 33(0)1 69 77 82 60

Iberia: Delta Electronics Solutions (Spain) S.L.U
Ctra. De Villaverde a Vallecas, 265 1º Dcha Ed.
Hormigueras – P.I. de Vallecas 28031 Madrid
TEL: 34(0)91 223 74 20

Carrer Llacuna 166, 08018 Barcelona, Spain
Mail: Sales.IA.Iberia@deltaww.com

Italy: Delta Electronics (Italy) S.r.l.
Via Meda 2–22060 Novedrate(CO)
Piazza Grazioli 18 00186 Roma Italy
Mail: Sales.IA.Italy@deltaww.com
TEL: 39 039 8900365

Russia: Delta Energy System LLC
Vereyskaya Plaza II, office 112 Vereyskaya str.
17 121357 Moscow Russia
Mail: Sales.IA.RU@deltaww.com
TEL: 7 495 644 3240

Turkey: Delta Greentech Elektronik San. Ltd. Sti. (Turkey)
Şerifali Mah. Hendem Cad. Kule Sok. No:16-A
34775 Ümraniye – İstanbul
Mail: Sales.IA.Turkey@deltaww.com
TEL: 90 216 499 9910

GCC: Delta Energy Systems AG (Dubai BR)
P.O. Box 185668, Gate 7, 3rd Floor, Hamarain Centre
Dubai, United Arab Emirates
Mail: Sales.IA.MEA@deltaww.com
TEL: 971(0)4 2690148

Egypt + North Africa: Delta Electronics
Unit 318, 3rd Floor, Trivium Business Complex, North 90 street,
New Cairo, Cairo, Egypt
Mail: Sales.IA.MEA@deltaww.com

*We reserve the right to change the information in this manual without prior notice.

DELTA_IA-MDS_C2000 Plus_UM_EN_20201204

Delta High Performance Vector Control Drive - C2000 Plus Series User Manual

Delta High Performance Vector Control Drive C2000 Plus Series User Manual

www.deltaww.com

Smarter. Greener. Together.

Copyright notice

©Delta Electronics, Inc. All rights reserved.

All information contained in this user manual is the exclusive property of Delta Electronics Inc. (hereinafter referred to as "Delta ") and is protected by copyright law and all other laws. Delta retains the exclusive rights of this user manual in accordance with the copyright law and all other laws. No parts in this manual may be reproduced, transmitted, transcribed, translated or used in any other ways without the prior consent of Delta.

Limitation of Liability

The contents of this user manual are only for the use of the AC motor drives manufactured by Delta. Except as defined in special mandatory laws, Delta provides this user manual “as is” and does not offer any kind of warranty through this user manual for using the product, either express or implied, including but not limited to the following: (i) this product will meet your needs or expectations; (ii) the information contained in the product is current and correct; (iii) the product does not infringe any rights of any other person. You shall bear your own risk to use this product.

In no event shall Delta, its subsidiaries, affiliates, managers, employees, agents, partners and licensors be liable for any direct, indirect, incidental, special, derivative or consequential damages (including but not limited to the damages for loss of profits, goodwill, use or other intangible losses) unless the laws contains special mandatory provisions to the contrary.

Delta reserves the right to make changes to the user manual and the products described in the user manual without prior notice and afterwards.

PLEASE READ PRIOR TO INSTALLATION FOR SAFETY.

DANGER

- ☑ Disconnect AC input power before connecting any wiring to the AC motor drive.
- ☑ Even if the power has been turned off, a charge may still remain in the DC-link capacitors with hazardous voltages before the POWER LED is OFF. Do NOT touch the internal circuits and components.
- ☑ There are highly sensitive MOS components on the printed circuit boards. These components are especially sensitive to static electricity. Take anti-static measure before touching these components or the circuit boards.
- ☑ Never modify the internal components or wiring.
- ☑ Ground the AC motor drive by using the ground terminal. The grounding method must comply with the laws of the country where the AC motor drive is to be installed.
- ☑ Do NOT install the AC motor drive in a location with high temperature, direct sunlight or inflammable materials or gases.

CAUTION

- ☑ Never connect the AC motor drive output terminals U/T1, V/T2 and W/T3 directly to the AC mains circuit power supply.
- ☑ After finishing the wiring of the AC motor drive, check if U/T1, V/T2, and W/T3 are short-circuited to ground with a multimeter. Do NOT power the drive if short circuits occur. Eliminate the short circuits before the drive is powered.
- ☑ The rated voltage of power system to install motor drives is listed below. Ensure that the installation voltage is in the correct range when installing a motor drive.
  1. For 230V models, the range is between 170–264V.
  2. For 460V models, the range is between 323–528V.
  3. For 575V models, the range is between 446–660V.
  4. For 690V models, the range is between 446–759V.
- ☑ Refer to the table below for short circuit rating:

Model (Power)	Short circuit rating
230V / 460V	100 kA
575V (2–20HP)	5 kA
690V (25–50HP)	5 kA
690V (60–175HP)	10 kA
690V (215–335HP)	18 kA
690V (425–600HP)	30 kA
690V (745–850HP)	42 kA

- ☑ Only qualified persons are allowed to install, wire and maintain the AC motor drives.
- ☑ Even if the three-phase AC motor is stopped, a charge with hazardous voltages may still remain in the main circuit terminals of the AC motor drive.
- ☑ The performance of electrolytic capacitor will degrade if it is not charged for a long time. It is recommended to charge the drive which is stored in no charge condition every 2 years for 3~4 hours to restore the performance of electrolytic capacitor in the motor drive. Note: When power up the motor drive, use adjustable AC power source (ex. AC autotransformer) to charge the drive at 70%~80% of rated voltage for 30 minutes (do not run the motor drive). Then charge the drive at 100% of rated voltage for an hour (do not run the motor drive). By doing these, restore the performance of electrolytic capacitor before starting to run the motor drive. Do NOT run the motor drive at 100% rated voltage right away.
- ☑ Pay attention to the following precautions when transporting and installing this package (including wooden crate and wood stave)
  1. If you need to deworm the wooden crate, do NOT use fumigation or you will damage the drive. Any damage to the drive caused by using fumigation voids the warranty.

	2. Use other methods, such as heat treatment or any other non-fumigation treatment, to deworm the wood packaging material. 3. If you use heat treatment to deworm, leave the packaging materials in an environment of over 56°C for a minimum of thirty minutes. ☑ Connect the drive to a three-phase three-wire or three-phase four-wire Wye system to comply with UL standards. ☑ If the motor drive generates leakage current over AC 3.5 mA or over DC 10 mA on a grounding conductor, compliance with local grounding regulations or IEC61800-5-1 standard is the minimum requirement for grounding.

NOTE

The content of this manual may be revised without prior notice. Please consult our distributors or download the latest version at http://www.deltaww.com/iadownload_acmotordrive

Table of Contents

CHAPTER 1 INTRODUCTION.....1-1

1-1 Nameplate Information.....1-2
1-2 Model Name.....1-3
1-3 Serial Number.....1-4
1-4 Apply After Service by Mobile Device.....1-5
1-5 RFI Jumper.....1-6
1-6 Dimensions.....1-9

CHAPTER 2 INSTALLATION 2-1

2-1 Mounting Clearance.....2-2
2-2 Airflow and Power Dissipation.....2-5

CHAPTER 3 UNPACKING.....3-1

3-1 Unpacking.....3-2
3-2 The Lifting Hook.....3-21

CHAPTER 4 WIRING.....4-1

4-1 System Wiring Diagram.....4-3
4-2 Wiring.....4-4

CHAPTER 5 MAIN CIRCUIT TERMINALS 5-1

5-1 Main Circuit Diagram.....5-4
5-2 Main Circuit Terminal Specifications.....5-7

CHAPTER 6 CONTROL TERMINALS.....6-1

6-1 Remove the Cover for Wiring.....6-4
6-2 Control Terminal Specifications.....6-8
6-3 Remove the Terminal Block.....6-11

CHAPTER 7 OPTIONAL ACCESSORIES.....7-1

7-1 Brake Resistors and Brake Units Used in AC Motor Drives.....7-2
7-2 Magnetic Contactor / Air Circuit Breaker and Non-fuse Circuit Breaker.....7-8
7-3 Fuse Specification Chart 7-13
7-4 AC / DC Reactor.....7-16
7-5 Zero Phase Reactor.....7-63
7-6 EMC Filter.....7-68

7-7 Panel Mounting.....7-92
7-8 Conduit Box Kit.....7-72
7-9 Fan Kit.....7-109
7-10 Flange Mounting Kit.....7-130
7-11 Power Terminal Kit 7-145
7-12 USB / RS-485 Communication Interface IFD6530.....7-148

CHAPTER 8 OPTION CARDS.....8-1

8-1 Option Card Installation.....8-2
8-2 EMC-D42A -- Extension card for 4-point digital input / 2-point digital input.....8-14
8-3 EMC-D611A -- Extension card for 6-point digital input (110V_{AC} input voltage) 8-14
8-4 EMC-R6AA -- Relay output extension card (6-point N.O. output contact) 8-15
8-5 EMC-BPS01 -- +24V power card.....8-15
8-6 EMC-A22A -- Extension card for 2-point analog input/ 2-point analog output.....8-16
8-7 EMC-PG01/02L -- PG card (Line driver) 8-18
8-8 EMC-PG01/02O -- PG card (Open collector) 8-21
8-9 EMC-PG01/02U -- PG card (ABZ Incremental encoder signal/ UVW Hall position signal input) ...8-24
8-10 EMC-PG01R -- PG card (Resolver).....8-27
8-11 EMC-PG01H -- PG card (Resolver).....8-29
8-12 CMC-PD01 -- Communication card, PROFIBUS DP.....8-32
8-13 CMC-DN01 -- Communication card, DeviceNet.....8-34
8-14 CMC-EIP01 -- Communication card, EtherNet/IP.....8-37
8-15 CMC-EC01 -- Communication card, EtherCAT.....8-41
8-16 CMC-PN01 -- Communication card, PROFINET.....8-44
8-17 EMC-COP01 -- Communication card, CANopen.....8-48
8-18 Delta Standard Fieldbus Cables.....8-49

CHAPTER 9 SPECIFICATION.....9-1

9-1 230V Models.....9-2
9-2 460V Models.....9-3
9-3 575V Models.....9-6
9-4 690V Models.....9-7
9-5 Environment for Operation, Storage and Transportation.....9-12
9-6 Specification for Operation Temperature and Protection Level.....9-13
9-7 Derating Curve of Ambient Temperature.....9-14
9-8 Efficiency Curve.....9-22

CHAPTER 10 DIGITAL KEYPAD 10-1

10-1 Descriptions of Digital Keypad 10-2
10-2 Function of Digital Keypad KPC-CC01.....10-5
10-3 TPEditor Installation Instruction 10-27

10-4 Fault Codes Description of Digital Keypad KPC-CC01.....10-36
10-5 Unsupported Functions when using TPEditor on KPC-CC01……10-41

CHAPTER 11 SUMMARY OF PARAMETERS 11-1

CHAPTER 12 DESCRIPTION OF PARAMETER SETTINGS 12-1

12-1 Descriptions of Parameter Settings ……..... 12.1-00-1
00 Drive Parameters……...12.1-00-1
01 Basic Parameters……12.1-01-1
02 Digital Input / Output Parameters……12.1-02-1
03 Analog Input / Output Parameters……12.1-03-1
04 Multi-step Speed Parameters…… ….12.1-04-1
05 Motor Parameters……12.1-05-1
06 Protection Parameters……12.1-06-1
07 Special Parameters……12.1-07-1
08 High-function PID Parameters……12.1-08-1
09 Communication Parameters……12.1-09-1
10 Feedback Control Parameters……12.1-10-1
11 Advanced Parameters……12.1-11-1
13 Application Parameters by Industry……12.1-13-1
14 Extension Card Parameter……12.1-14-1
12-2 Adjustment & Application..... 12.2-1

CHAPTER 13 WARNING CODES 13-1

CHAPTER 14 FAULT CODES AND DESCRIPTIONS.....14-1

CHAPTER 15 CANOPEN OVERVIEW 15-1

15-1 CANopen Overview…….....15-3
15-2 Wiring for CANopen…….....15-6
15-3 CANopen Communication Interface Description…….....15-7
15-4 CANopen Supporting Index …….....15-19
15-5 CANopen Fault Codes …….....15-26
15-6 CANopen LED Function…….....15-35

CHAPTER 16 PLC FUNCTION APPLICATIONS 16-1

16-1 PLC Summary…….....16-2
16-2 Notes Before PLC Use…….....16-3
16-3 Turn On…….....16-5
16-4 Basic Principles of PLC Ladder Diagrams.....16-15
16-5 Various PLC Device Functions…….....16-26

16-6 Introduction to The Command Window.....16-41
16-7 Error Display and Handling.....16-131
16-8 CANopen Master Control Applications.....16-132
16-9 Explanation of Various PLC Mode Controls (speed, torque, homing, and position) 16-145
16-10 Internal Communications Main Node Control.....16-151
16-11 Count Function Using MI8.....16-155
16-12 Modbus Remote IO Control Applications (use MODRW) 16-156
16-13 Calendar Function……16-163

CHAPTER 17 SAFE TORQUE OFF FUNCTION……17-1

17-1 The Drive Safety Function Failure Rate……17-2
17-2 Safe Torque Off Terminal Function Description……...17-2
17-3 Wiring Diagram……17-3
17-4 Parameters……17-5
17-5 Operating Sequence Description……...……17-6
17-6 New Error Code for STO Function……17-8

APPENDIX A. REVISION HISTORY……...……..A-1

Issued Edition: 01
Firmware Version: V3.06
(Refer to Parameter 00-06 on the product to get the firmware version.)
Issued Date: 2020 / 09

Chapter 1 Introduction

1-1 Nameplate Information

1-2 Model Name

1-3 Serial Number

1-4 Apply After Service by Mobile Device

1-5 RFI Jumper

1-6 Dimensions

Receiving and Inspection

After receiving the AC motor drive, please check for the following:

1. Inspect the unit after unpacking to ensure that it was not damaged during shipment. Make sure that the part number printed on the package matches the part number indicated on the nameplate.
2. Make sure that the mains voltage is within the range indicated on the nameplate. Install the AC motor drive according to the instructions in this manual.
3. Before applying power, make sure that all devices, including mains power, motor, control board and digital keypad, are connected correctly.
4. When wiring the AC motor drive, make sure that the wiring of input terminals “R/L1, S/L2, T/L3” and output terminals “U/T1, V/T2, W/T3” are correct to prevent damage to the drive.
5. When power is applied, use the digital keypad (KPC-CC01) to select the language and set parameters. When executing a trial run, begin with a low speed and then gradually increases the speed to the desired speed.

1-1 Nameplate Information

230V / 460V Model

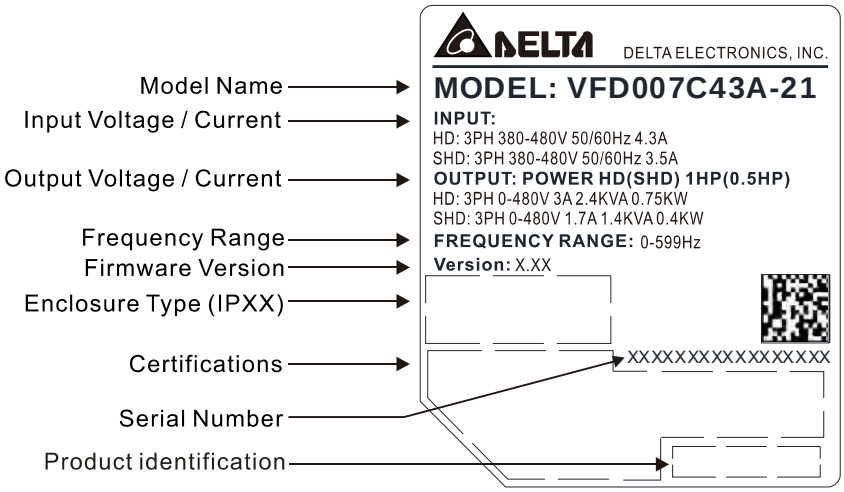

Figure 1-1

575V / 690V Model

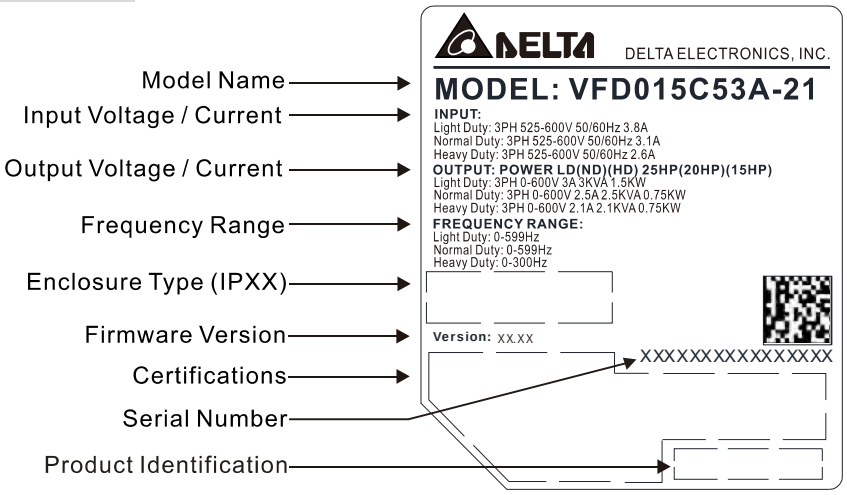

Figure 1-2

1-2 Model Name

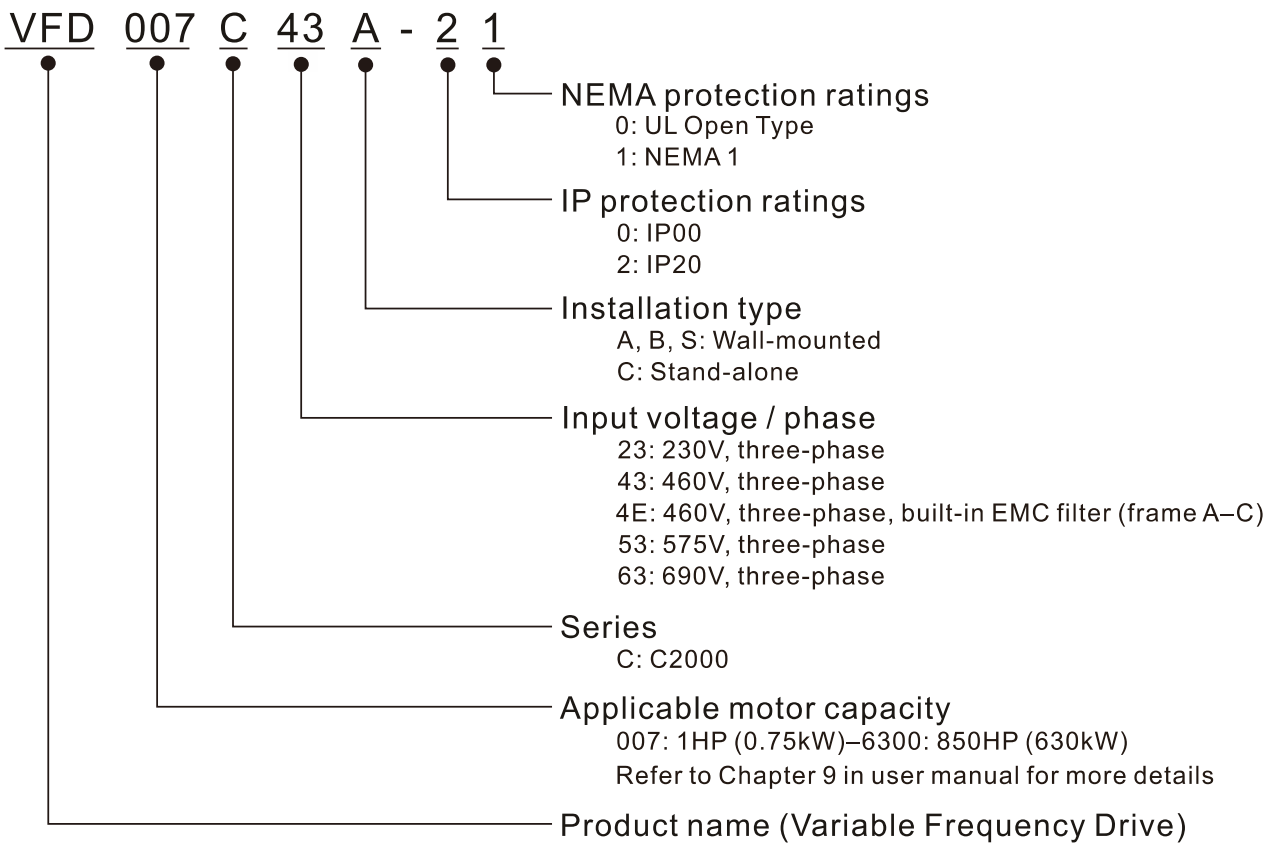

1-3 Serial Number

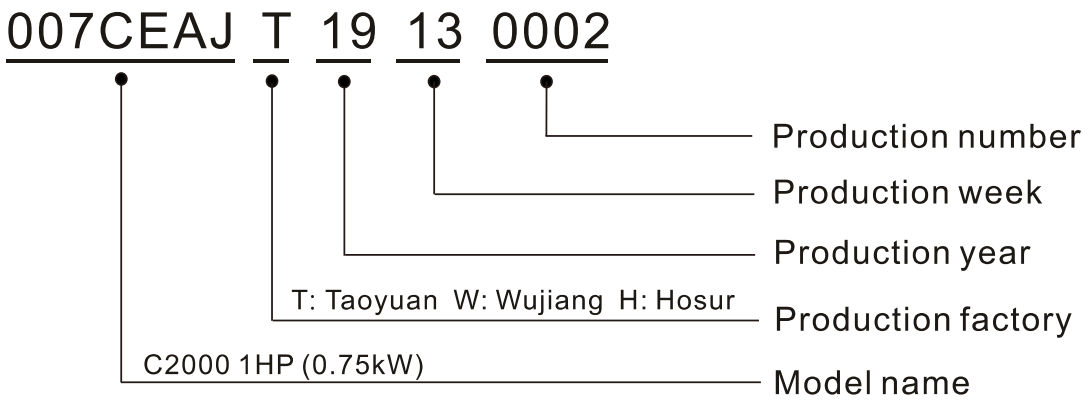

1-4 Apply After Service by Mobile Device

1-4-1 Location of Service Link Label

Frame A–H

Service link label (Service Label) will be pasted on the upper-right corner of the side where keypad is installed on the case body, as below drawing shown:

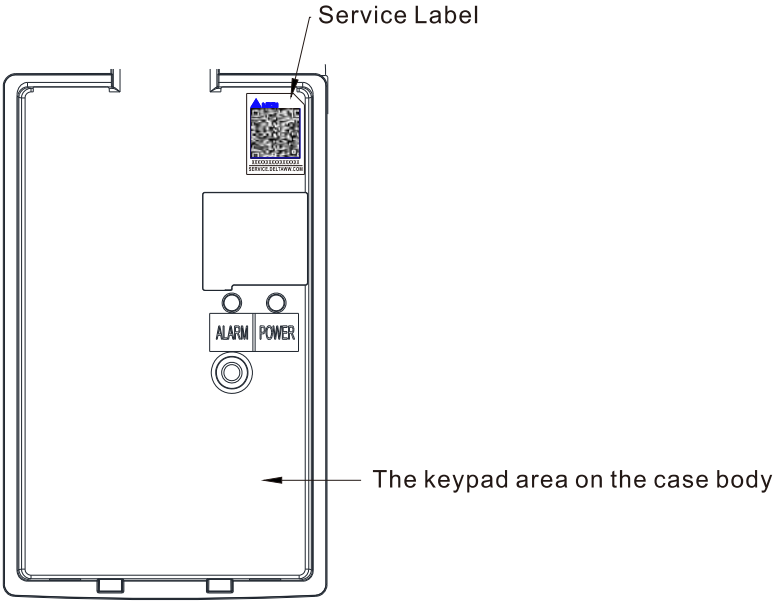

Figure 1-3

1-4-2 Service Link Label

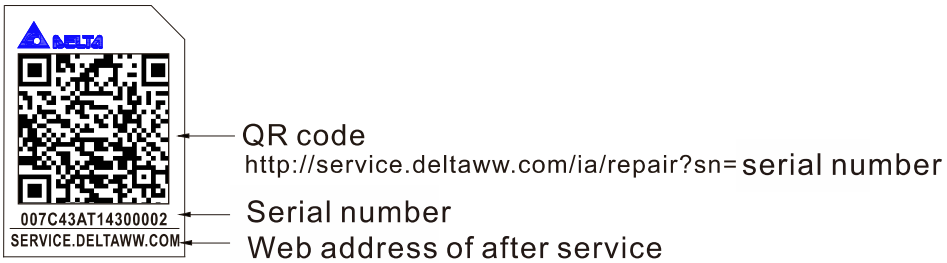

Figure 1-4

Scan QR Code to apply

1. Find out the QR code sticker (as above shown).
2. Using a Smartphone to run a QR Code reader APP.
3. Point your camera to the QR Code. Hold your camera steady so that the QR code comes into focus.
4. Access the Delta after Service website.
5. Fill your information into the column marked with an orange star.
6. Enter the CAPTCHA and click “Submit” to complete the application.

Cannot find out the QR Code?

1. Open a web browser on your computer or smart phone.
2. Key in https://service.deltaww.com/ia/repair in address bar and press enter
3. Fill your information into the columns marked with an orange star.
4. Enter the CAPTCHA and click “Submit” to complete the application.

1-5 RFI Jumper

(1) The drive contains Varistors / MOVs that are connected from phase to phase and from phase to ground to prevent the drive from unexpected stop or damage caused by mains surges or voltage spikes. Because the Varistors / MOVs from phase to ground are connected to ground with the RFI jumper, removing the RFI jumper disables the protection.

(2) In models with a built-in EMC filter, the RFI jumper connects the filer capacitors to ground to form a return path for high frequency noise in order to isolate the noise from contaminating the mains power. Removing the RFI jumper strongly reduces the effect of the built-in EMC filter. Although a single drive complies with the international standards for leakage current, an installation with several drives with built-in EMC filters can trigger the RCD. Removing the RFI jumper helps, but the EMC performance of each drive is no longer guaranteed.

Frame A–C Screw Torque: 8–10 kg-cm / [6.9–8.7 lb-in.] / [0.8–1.0 Nm]

Loosen the screws and remove the RFI jumper (as shown below).

Tighten the screws again after you remove the RFI jumper.

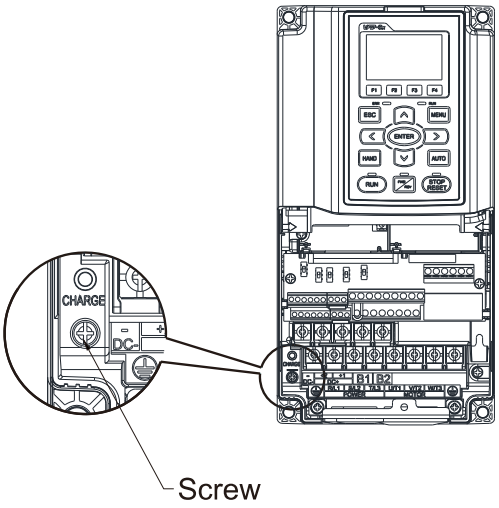

Figure 1-5

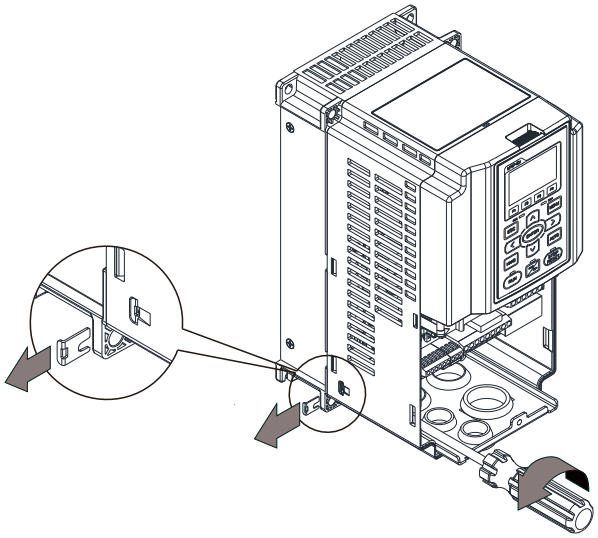

Figure 1-6

Frame D0–H

Remove the RFI jumper by hands, no screws need to be loosen.

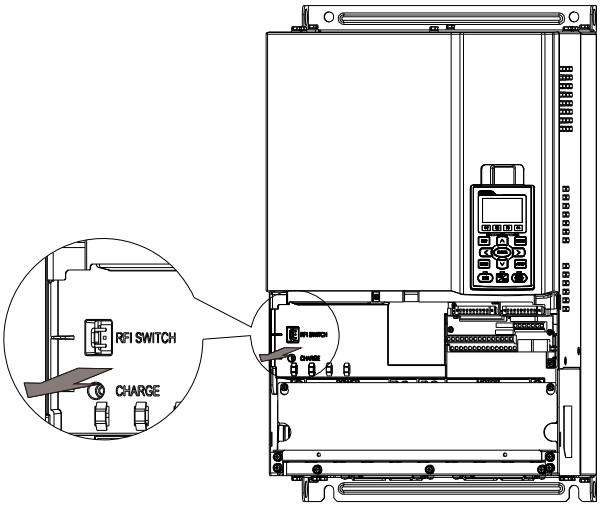

Figure 1-7

Isolating main power from ground:

When the power distribution system of the drive is a floating ground system (IT Systems) or an asymmetric ground system (Corner Grounded TN Systems), you must remove the RFI jumper. Removing the RFI jumper disconnects the internal capacitors from ground to avoid damaging the internal circuits and to reduce the ground leakage current.

Important points regarding ground connection

- ☑ To ensure the safety of personnel, proper operation, and to reduce electromagnetic radiation, you must properly ground the motor and drive during installation.
- ☑ The diameter of the grounding cables must comply with the local safety regulations.
- ☑ You must connect the shielded cable to the motor drive's ground to meet safety regulations.
- ☑ Only use the shielded cable as the ground for equipment when the aforementioned points are met.
- ☑ When installing multiple drives, do not connect the grounds of the drives in series but connect each drive to ground. The following pictures show the correct and wrong ways to connect the grounds.

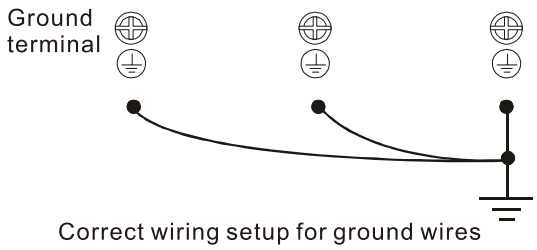

Figure 1-8

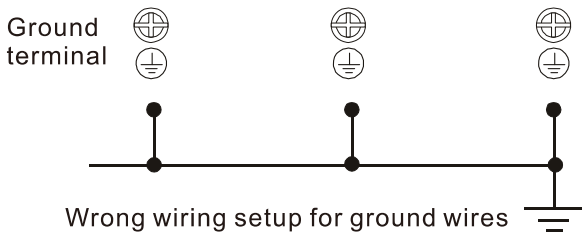

Figure 1-9

Pay particular attention to the following points:

- ☑ Do not remove the RFI jumper while the power is ON.
- ☑ Removing the RFI jumper also cuts the capacitor conductivity of the surge absorber to ground and the built-in EMC filter capacitors. Compliance with the EMC specifications is no longer guaranteed.
- ☑ Do not remove the RFI jumper if the mains power is a symmetrical grounded power system in order to maintain the efficiency for EMC circuit.
- ☑ Remove the RFI jumper when conducting high voltage tests. When conducting a high voltage test to the entire facility, disconnect the mains power and the motor if the leakage current is too high.

Floating Ground System (IT Systems)

A floating ground system is also called IT system, ungrounded system, or high impedance / resistance (greater than 30Ω) grounding system.

- ☑ Remove the RFI jumper to disconnect the ground cable from the internal filter capacitor and surge absorber.
- ☑ In situations where EMC is required, check for excess electromagnetic radiation affecting nearby low-voltage circuits. In some situations, the adapter and cable naturally provide enough suppression. If in doubt, install an extra electrostatic shielded cable on the power supply side between the main circuit and the control terminals to increase shielding.
- ☑ Do not install an external RFI / EMC filter. The external EMC filter passes through a filter capacitor and connects power input to the ground. This is very dangerous and damages the motor drive.

Asymmetric Ground System (Corner Grounded TN Systems)

Caution: Do not remove the RFI jumper while the input terminal of the drive is ON.

In the following four situations, the RFI jumper must be removed. This is to prevent the system from grounding through the RFI and filter capacitor and damaging the drive.

<table>
<tr><th colspan="2">You must remove the RFI jumper for an asymmetric ground system</th></tr>
<tr><td>1. Grounding at a corner in a triangle configuration
 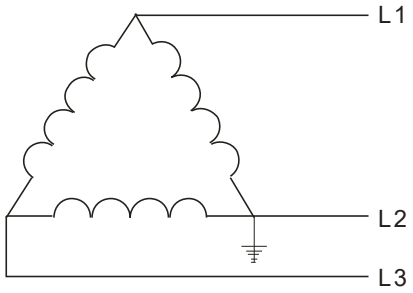

Figure 1-10</td><td>2. Grounding at a midpoint in a polygonal configuration
 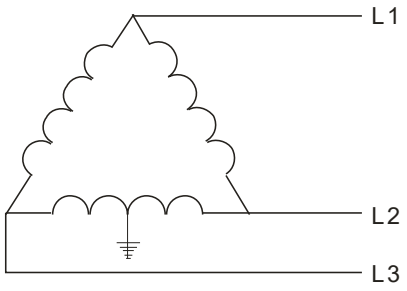

Figure 1-11</td></tr>
<tr><td>3. Grounding at one end in a single-phase configuration
 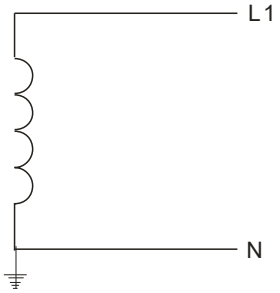

Figure 1-12</td><td>4. No stable neutral grounding in a three-phase autotransformer configuration
 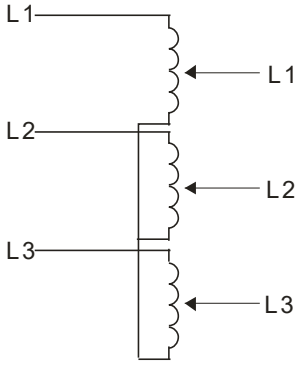

Figure 1-13</td></tr>
<tr><th colspan="2">You can use the RFI jumper for a symmetrical grounding power system</th></tr>
<tr><td>In a situation with a symmetrical grounding power system, you can use the RFI jumper to maintain the effect of the built-in EMC filter and surge absorber. For example, the diagram on the right is a symmetrical grounding power system.</td><td> 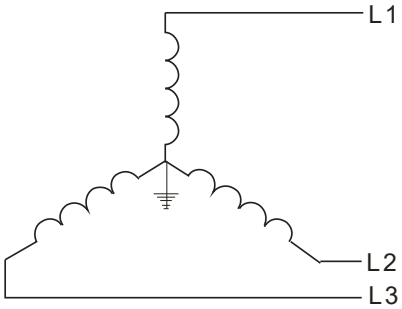

Figure 1-14</td></tr>
</table>

1-6 Dimensions

Frame A

VFD007C23A-21; VFD007C43A-21; VFD007C4EA-21; VFD015C23A-21; VFD015C43A-21; VFD015C4EA-21; VFD015C53A-21; VFD022C23A-21; VFD022C43A-21; VFD022C4EA-21; VFD022C53A-21; VFD037C23A-21; VFD037C43A-21; VFD037C4EA-21; VFD037C53A-21; VFD040C43A-21; VFD040C4EA-21; VFD055C43A-21; VFD055C4EA-21

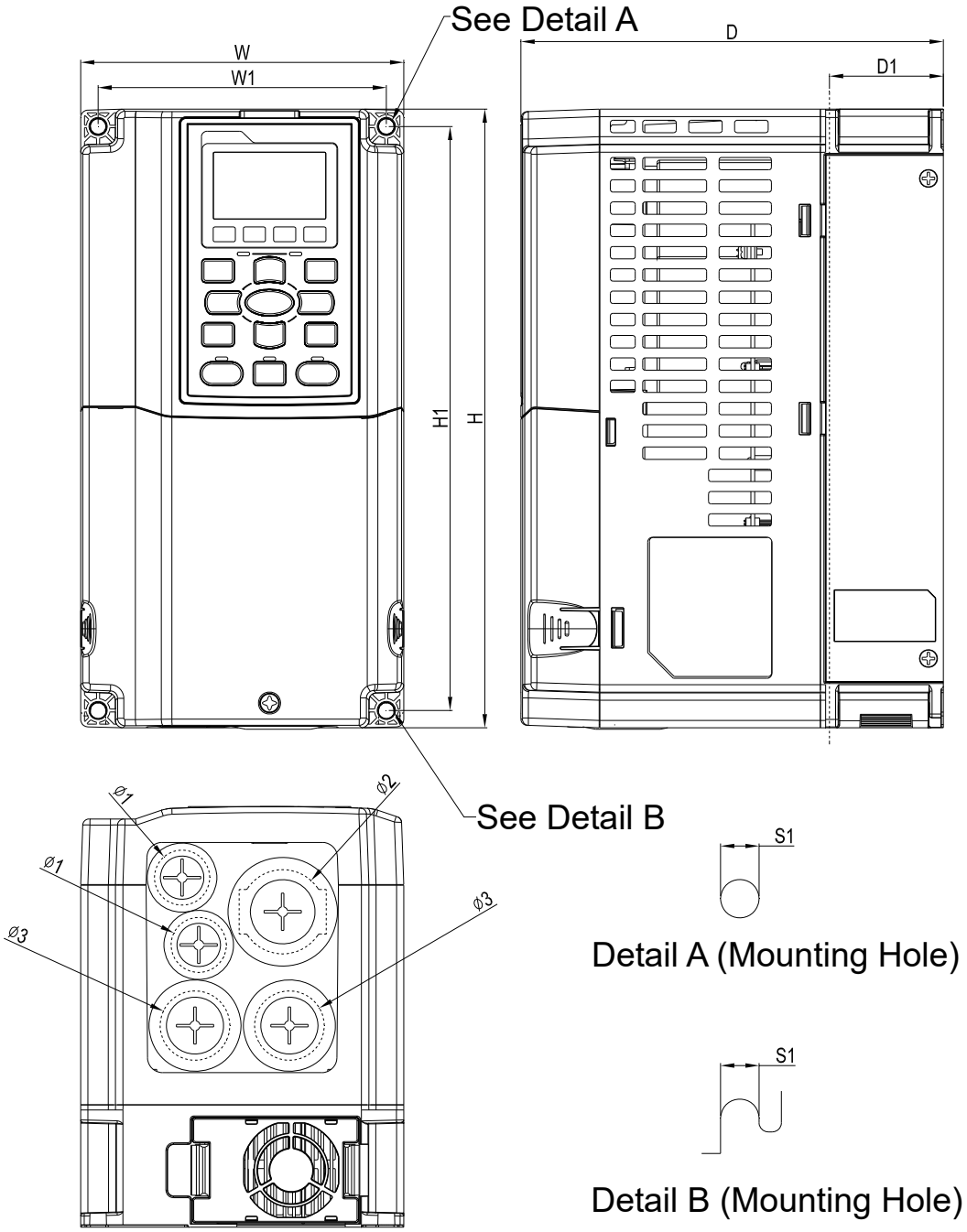

Figure 1-15

Unit: mm [inch]

Frame	W	H	D	W1	H1	D1*	S1	Φ1	Φ2	Φ3
A1	130.0 [5.12]	250.0 [9.84]	170.0 [6.69]	116.0 [4.57]	236.0 [9.29]	45.8 [1.80]	6.2 [0.24]	22.2 [0.87]	34.0 [1.34]	28.0 [1.10]

D1*: Flange mounting

Frame B

VFD055C23A-21; VFD055C53A-21; VFD075C23A-21; VFD075C43A-21; VFD075C4EA-21; VFD075C53A-21; VFD110C23A-21; VFD110C43A-21; VFD110C4EA-21; VFD110C53A-21; VFD150C43A-21; VFD150C4EA-21; VFD150C53A-21

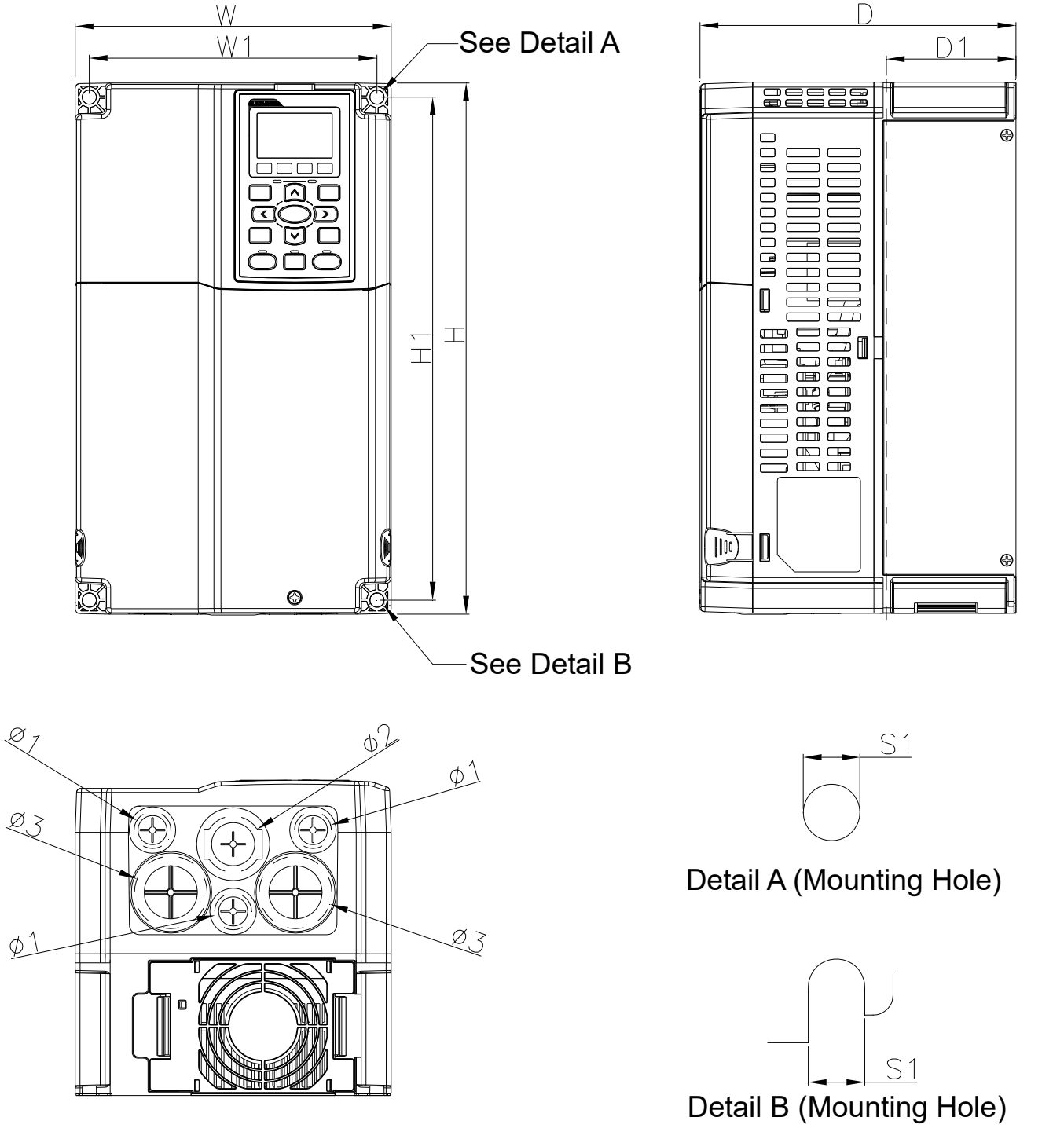

Figure 1-16

Unit: mm [inch]

Frame	W	H	D	W1	H1	D1*	S1	Φ1	Φ2	Φ3
B1	190.0 [7.48]	320.0 [12.60]	190.0 [7.48]	173.0 [6.81]	303.0 [11.93]	77.9 [3.07]	8.5 [0.33]	22.2 [0.87]	34.0 [1.34]	43.8 [1.72]

D1*: Flange mounting

Frame C

VFD150C23A-21; VFD185C23A-21; VFD185C43A-21; VFD185C4EA-21; VFD185C63B-21; VFD220C23A-21; VFD220C43A-21; VFD220C4EA-21; VFD220C63B-21; VFD300C43A-21; VFD300C4EA-21; VFD300C63B-21; VFD370C63B-21

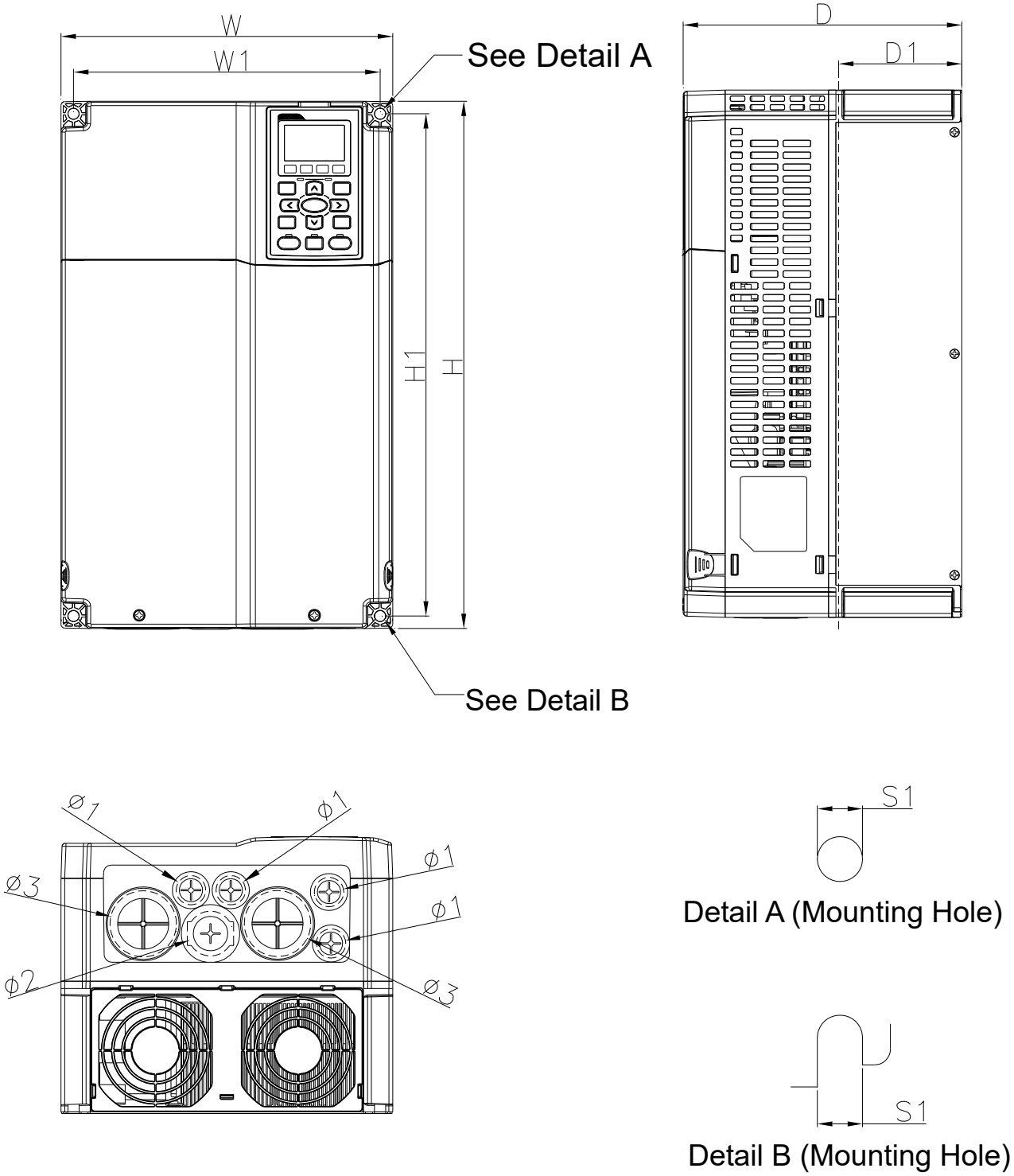

Figure 1-17

Unit: mm [inch]

Frame	W	H	D	W1	H1	D1*	S1	Φ1	Φ2	Φ3
C1	250.0 [9.84]	400.0 [15.75]	210.0 [8.27]	231.0 [9.09]	381.0 [15.00]	92.9 [3.66]	8.5 [0.33]	22.2 [0.87]	34.0 [1.34]	50.0 [1.97]

D1*: Flange mounting

Frame D0

D0-1: VFD370C43S-00; VFD450C43S-00

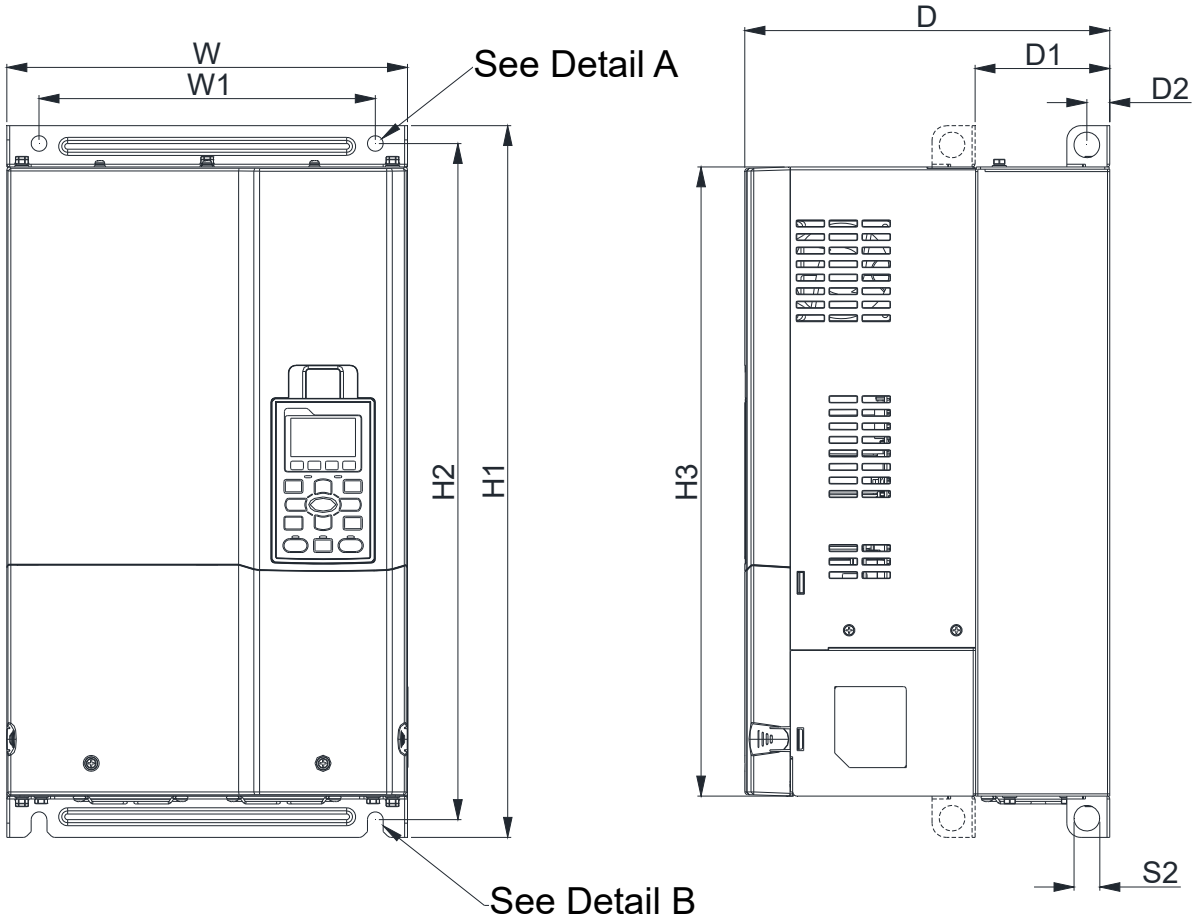

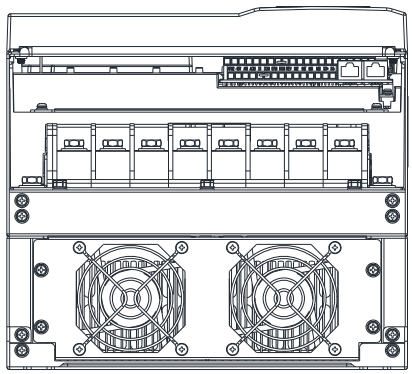

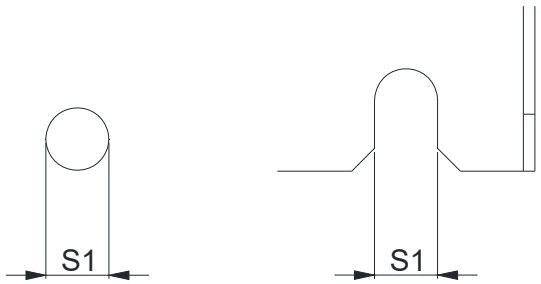

Detail A (Mounting Hole)

Detail B (Mounting Hole)

Figure 1-18

Unit: mm [inch]

Frame	W	H1	D	W1	H2	H3	D1*	D2	S1	S2
D0-1	280.0 [11.02]	500.0 [19.69]	255.0 [10.04]	235.0 [9.25]	475.0 [18.70]	442.0 [17.40]	94.2 [3.71]	16.0 [0.63]	11.0 [0.43]	18.0 [0.71]

D1*: Flange mounting

Frame D0

D0-2: VFD370C43S-21; VFD450C43S-21

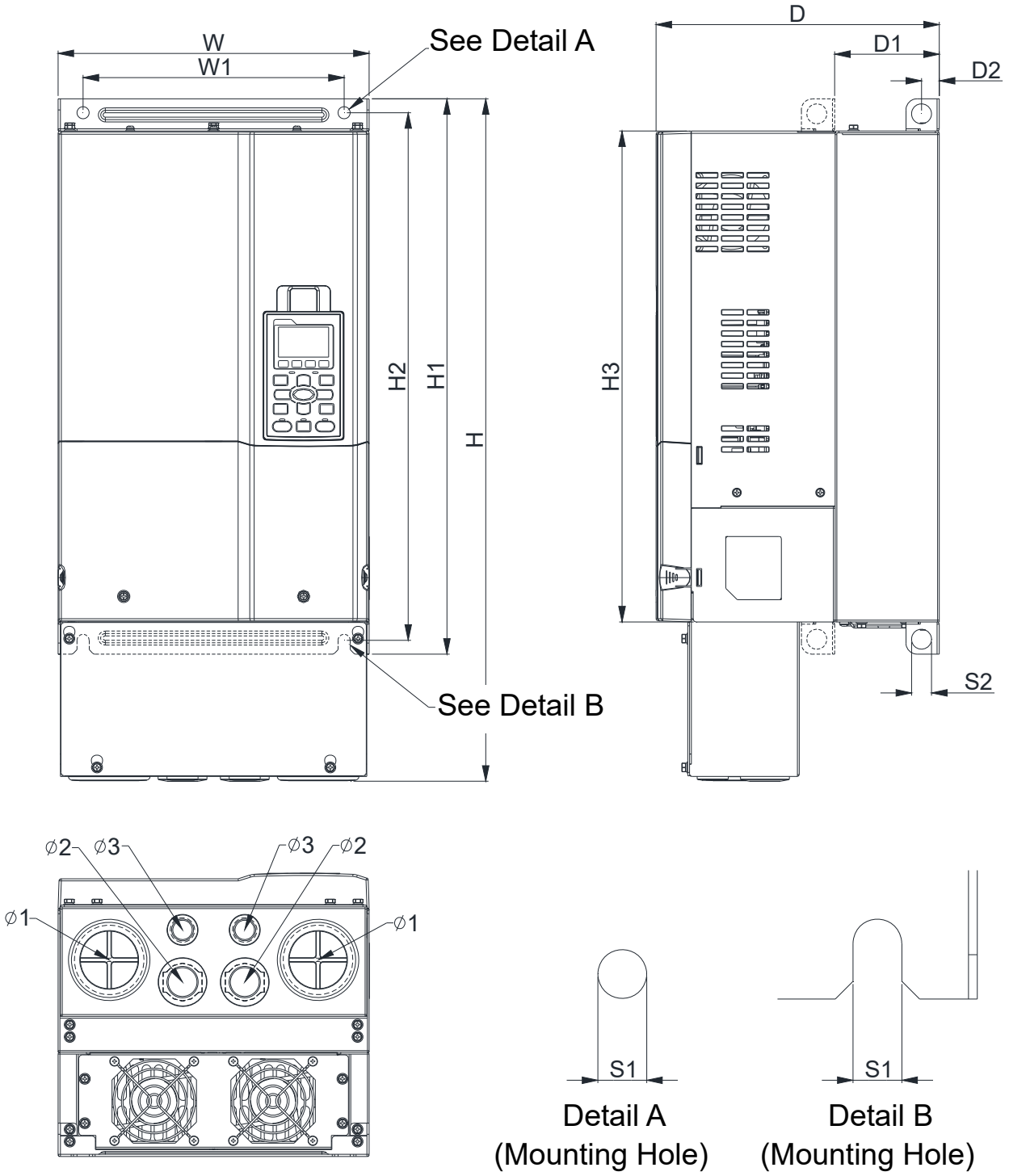

Figure 1-19

Unit: mm [inch]

Frame	W	H	D	W1	H1	H2	H3	D1*	D2	S1	S2	Φ1	Φ2	Φ3
D0-2	280.0 [11.02]	614.4 [24.19]	255.0 [10.04]	235.0 [9.25]	500.0 [19.69]	475.0 [18.70]	442.0 [17.40]	94.2 [3.71]	16.0 [0.63]	11.0 [0.43]	18.0 [0.71]	62.7 [2.47]	34.0 [1.34]	22.0 [0.87]

D1*: Flange mounting

Frame D

D1: VFD300C23A-00; VFD370C23A-00; VFD450C63B-00; VFD550C43A-00; VFD550C63B-00; VFD750C43A-00

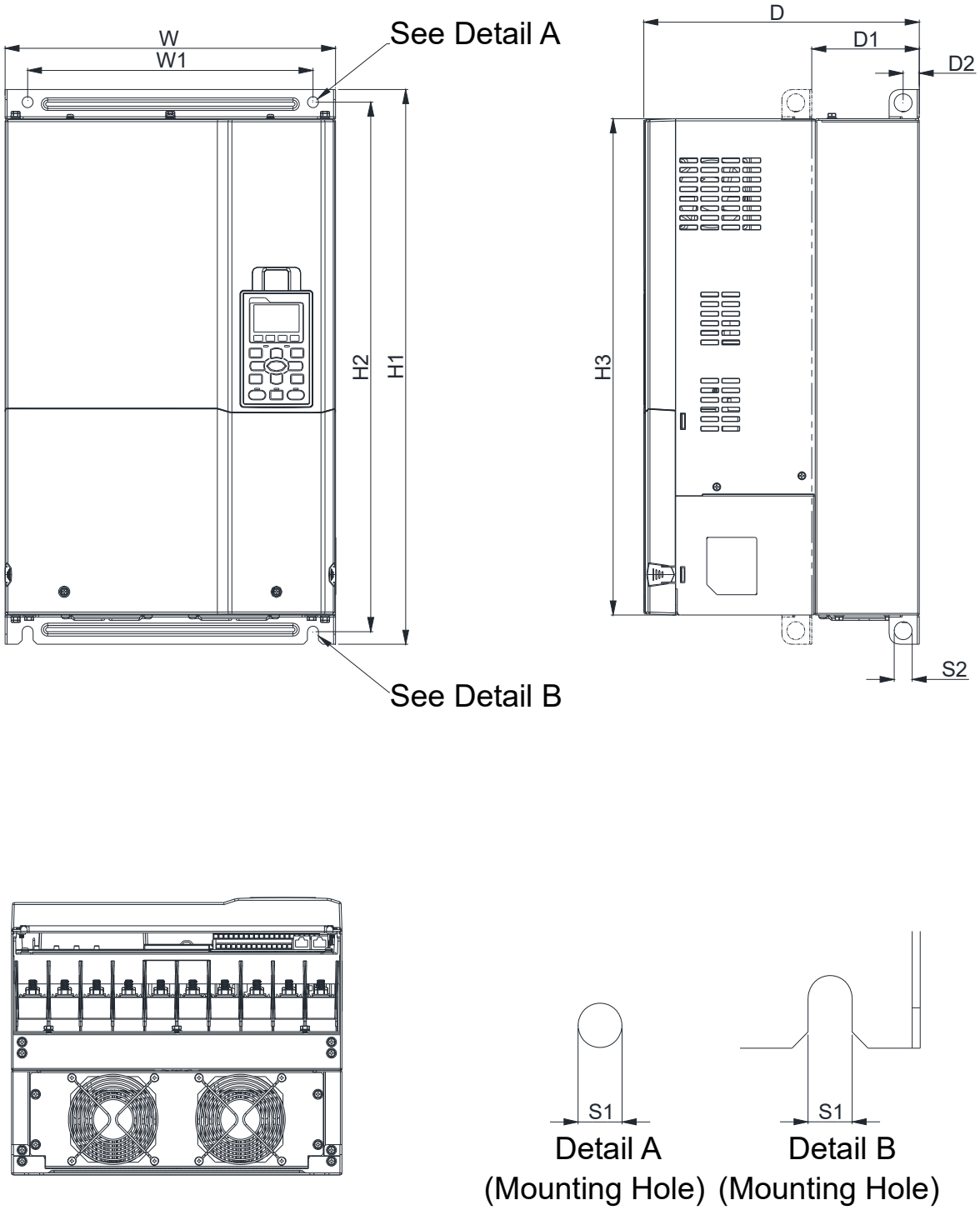

Figure 1-20

Unit: mm [inch]

Frame	W	H	D	W1	H1	H2	H3	D1*	D2	S1	S2	Φ1	Φ2	Φ3
D1	330.0 [12.99]	-	275.0 [10.83]	285.0 [11.22]	550.0 [21.65]	525.0 [20.67]	492.0 [19.37]	107.2 [4.22]	16.0 [0.63]	11.0 [0.43]	18.0 [0.71]	-	-	-

D1*: Flange mounting

Frame D

D2: VFD300C23A-21; VFD370C23A-21; VFD450C63B-21; VFD550C43A-21; VFD550C63B-21; VFD750C43A-21

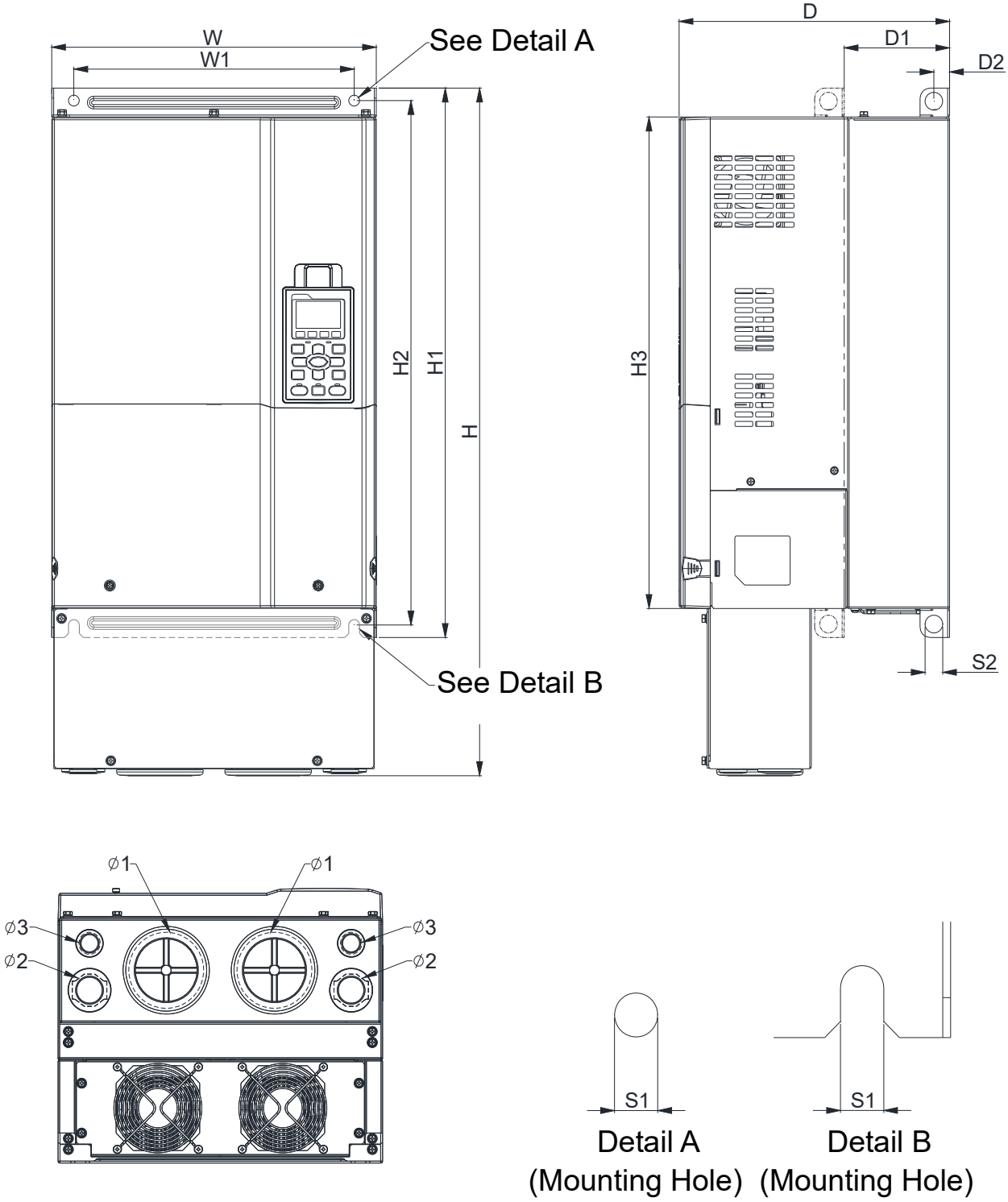

Figure 1-21

Unit: mm [inch]

Frame	W	H	D	W1	H1	H2	H3	D1*	D2	S1	S2	Φ1	Φ2	Φ3
D2	330.0 [12.99]	688.3 [27.10]	275.0 [10.83]	285.0 [11.22]	550.0 [21.65]	525.0 [20.67]	492.0 [19.37]	107.2 [4.22]	16.0 [0.63]	11.0 [0.43]	18.0 [0.71]	76.2 [3.00]	34.0 [1.34]	22.0 [0.87]

D1*: Flange mounting

Frame E

E1: VFD450C23A-00; VFD550C23A-00; VFD750C23A-00; VFD750C63B-00; VFD900C43A-00; VFD900C63B-00; VFD1100C43A-00; VFD1100C63B-00; VFD1320C63B-00

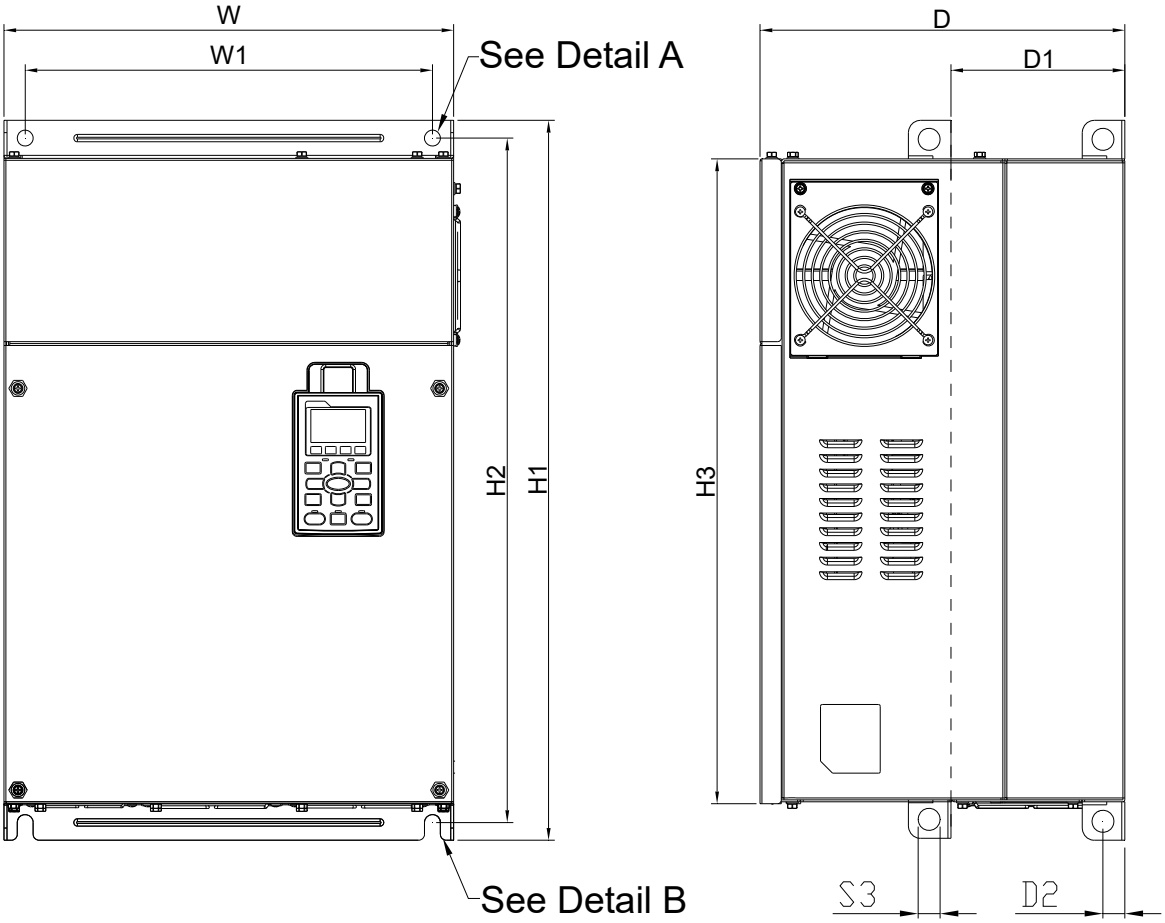

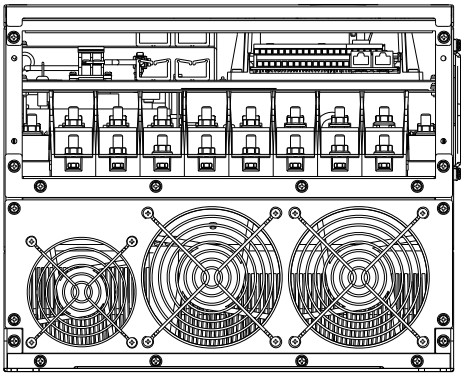

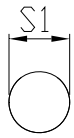

Detail A
(Mounting Hole)

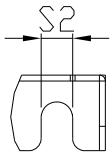

Detail B
(Mounting Hole)

Figure 1-22

Unit: mm [inch]

Frame	W	H	D	W1	H1	H2	H3	D1*	D2	S1, S2	S3	Φ1	Φ2	Φ3
E1	370.0 [14.57]	-	300.0 [11.81]	335.0 [13.19	589 [23.19]	560.0 [22.05]	528.0 [20.80]	143.0 [5.63]	18.0 [0.71]	13.0 [0.51]	18.0 [0.71]	-	-	-

D1*: Flange mounting

Frame E

E2: VFD450C23A-21; VFD550C23A-21; VFD750C23A-21; VFD750C63B-21; VFD900C43A-21; VFD900C63B-21; VFD1100C43A-21; VFD1100C63B-21; VFD1320C63B-21

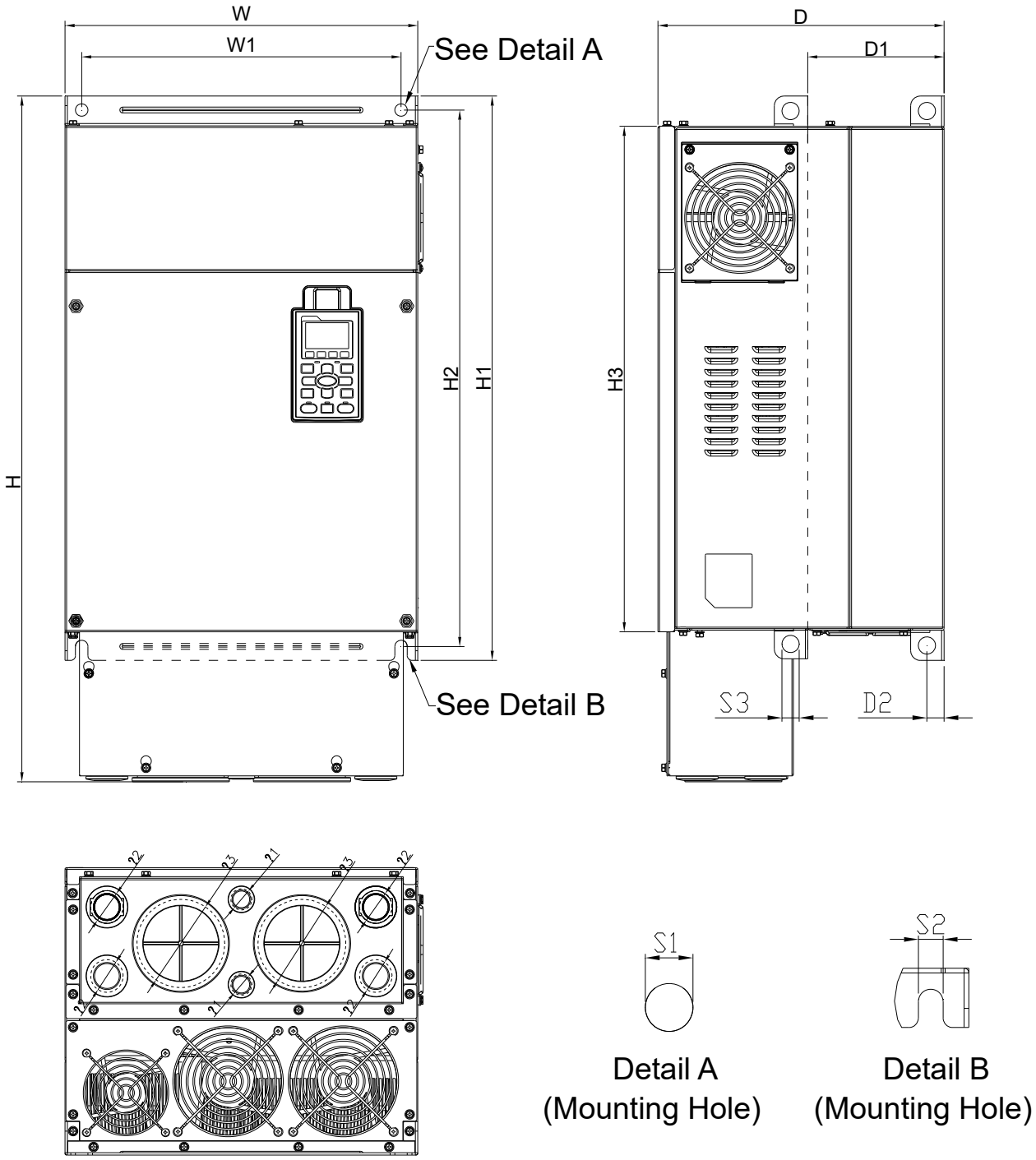

Figure 1-23

Unit: mm [inch]

Frame	W	H	D	W1	H1	H2	H3	D1*	D2	S1, S2	S3	Φ1	Φ2	Φ3
E2	370.0 [14.57]	715.8 [28.18]	300.0 [11.81]	335.0 [13.19	589 [23.19]	560.0 [22.05]	528.0 [20.80]	143.0 [5.63]	18.0 [0.71]	13.0 [0.51]	18.0 [0.71]	22.0 [0.87]	34.0 [1.34]	92.0 [3.62]

D1*: Flange mounting

Frame F

F1: VFD900C23A-00; VFD1320C43A-00; VFD1600C43A-00; VFD1600C63B-00; VFD2000C63B-00

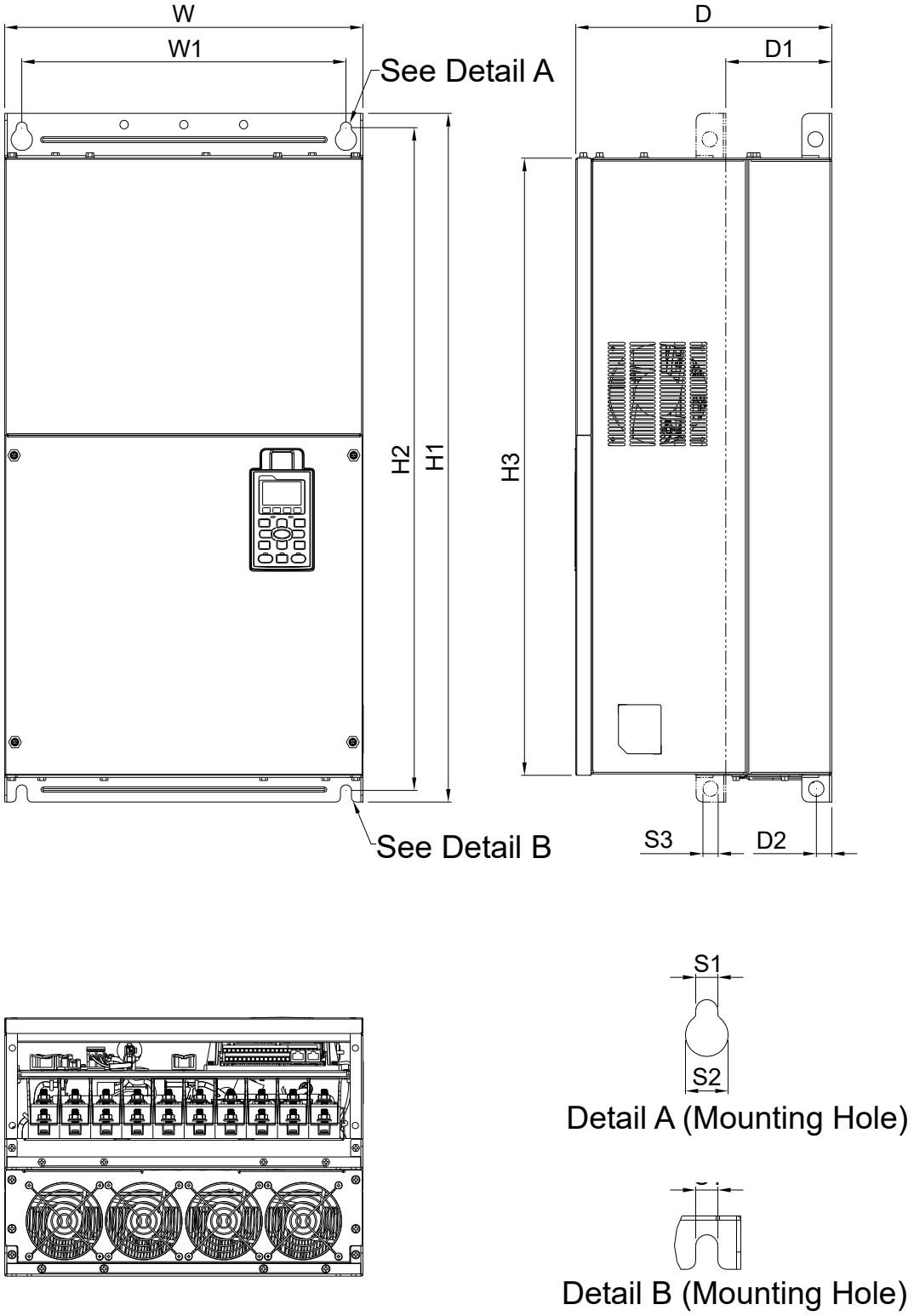

Figure 1-24

Unit: mm [inch]

Frame	W	H	D	W1	H1	H2	H3	D1*	D2	S1	S2	S3
F1	420.0 [16.54]	-	300.0 [11.81]	380.0 [14.96]	800.0 [31.50]	770.0 [30.32]	717.0 [28.23]	124.0 [4.88]	18.0 [0.71]	13.0 [0.51]	25.0 [0.98]	18.0 [0.71]

D1*: Flange mounting

Frame F

F2: VFD900C23A-21; VFD1320C43A-21; VFD1600C43A-21; VFD1600C63B-21; VFD2000C63B-21

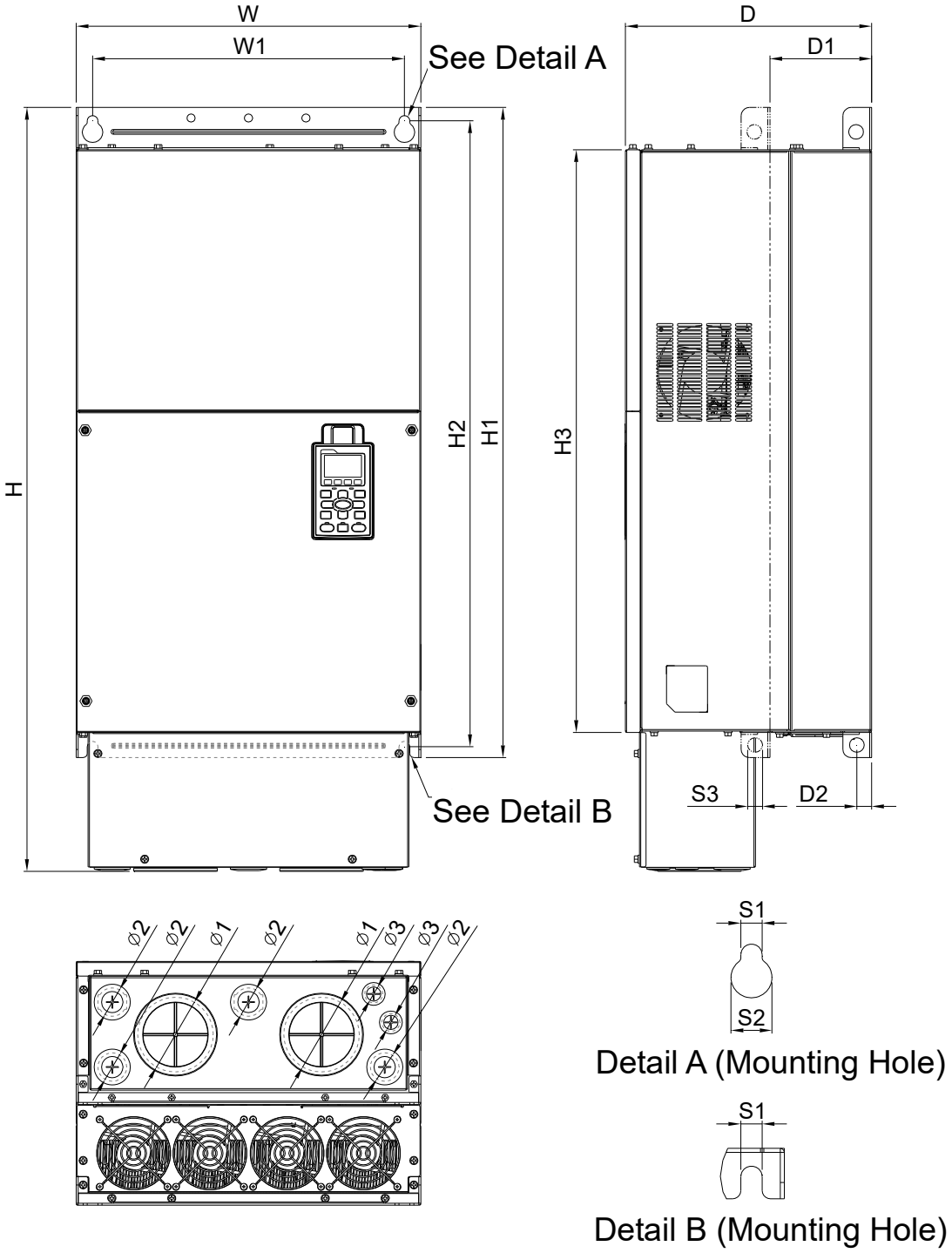

Figure 1-25

Unit: mm [inch]

Frame	W	H	D	W1	H1	H2	H3	D1*	D2	S1	S2	S3
F2	420.0 [16.54]	940.0 [37.00]	300.0 [11.81]	380.0 [14.96]	800.0 [31.50]	770.0 [30.32]	717.0 [28.23]	124.0 [4.88]	18.0 [0.71]	13.0 [0.51]	25.0 [0.98]	18.0 [0.71]

Frame	Φ1	Φ2	Φ3
F2	92.0 [3.62]	35.0 [1.38]	22.0 [0.87]

D1*: Flange mounting

Frame G

G1: VFD1850C43A-00; VFD2000C43A-00; VFD2200C43A-00; VFD2500C43A-00; VFD2500C63B-00; VFD3150C63B-00

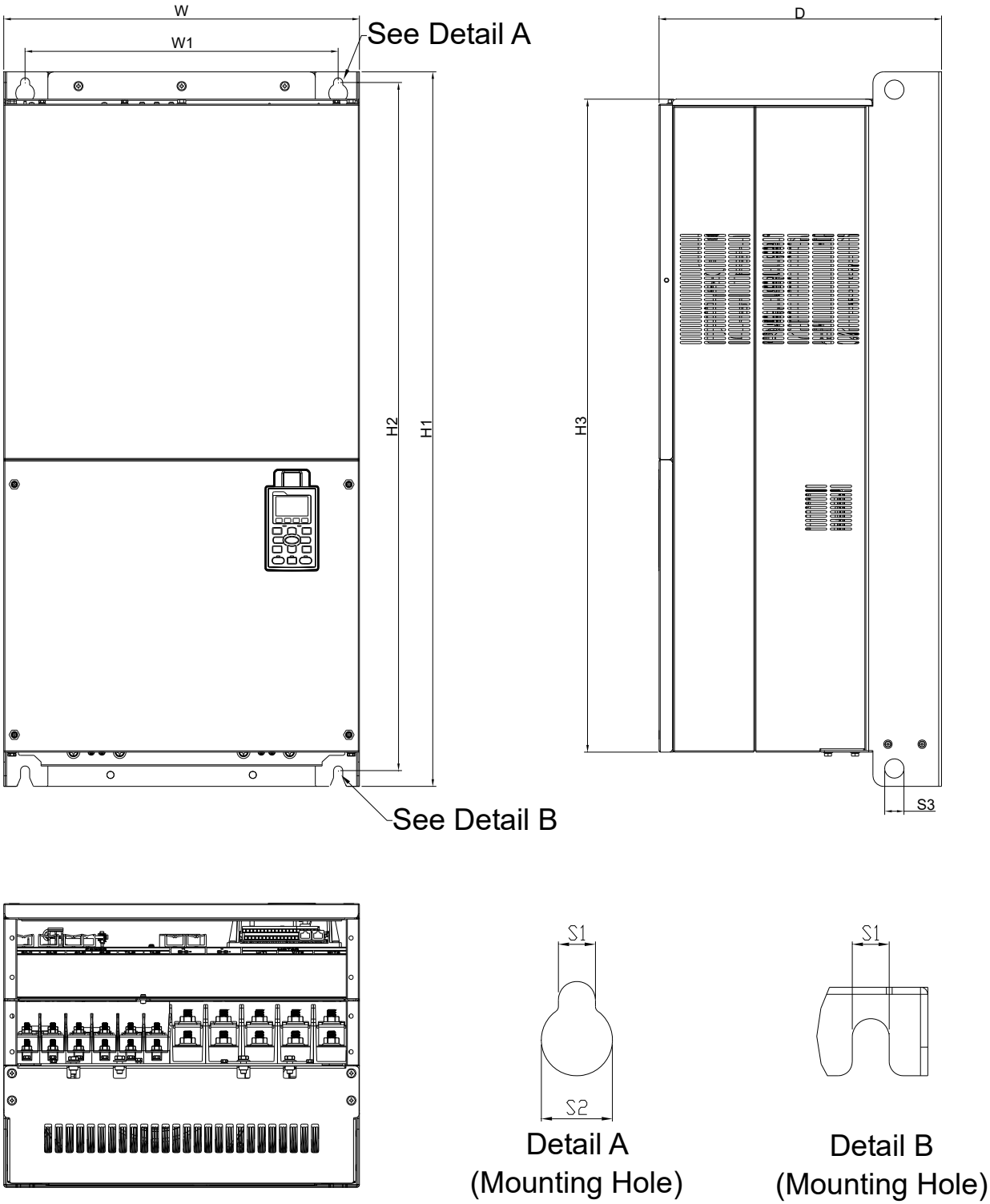

Figure 1-26

Unit: mm [inch]

Frame	W	H	D	W1	H1	H2	H3	S1	S2	S3	Φ1	Φ2	Φ3
G1	500.0 [19.69]	-	397.0 [15.63]	440.0 [217.32]	1000.0 [39.37]	963.0 [37.91]	913.6 [35.97]	13.0 [0.51]	26.5 [1.04]	27.0 [1.06]	-	-	-

Frame G

G2: VFD1850C43A-21; VFD2000C43A-21; VFD2200C43A-21; VFD2500C43A-21; VFD2500C63B-21; VFD3150C63B-21

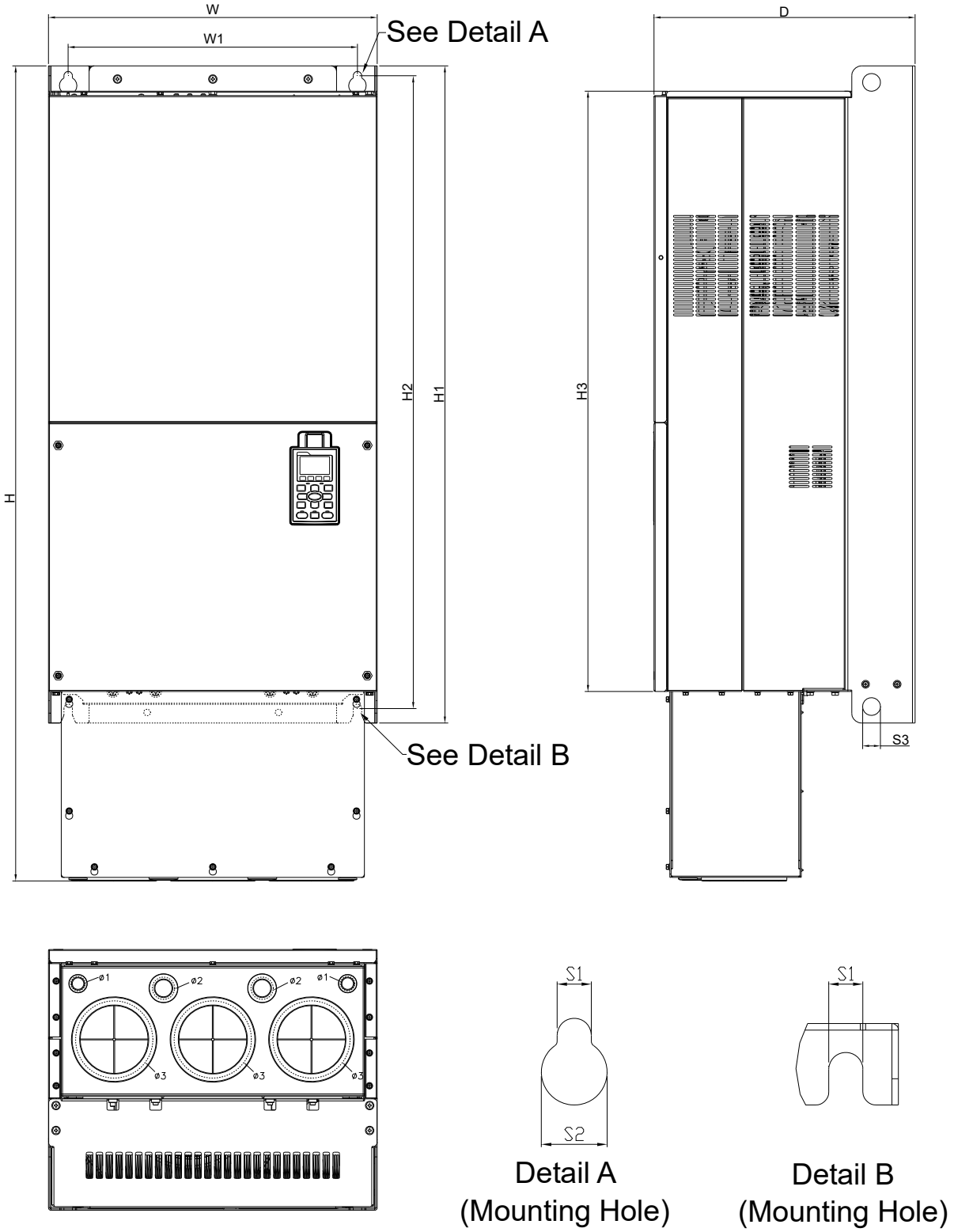

Figure 1-27

Unit: mm [inch]

Frame	W	H	D	W1	H1	H2	H3	S1	S2	S3	Φ1	Φ2	Φ3
G2	500.0 [19.69]	1240.2 [48.83]	397.0 [15.63]	440.0 [217.32]	1000.0 [39.37]	963.0 [37.91]	913.6 [35.97]	13.0 [0.51]	26.5 [1.04]	27.0 [1.06]	22.0 [0.87]	34.0 [1.34]	117.5 [4.63]

Frame H

H1: VFD2800C43A-00; VFD3150C43A-00; VFD3550C43A-00; VFD4000C43A-00; VFD4000C63B-00; VFD4500C43A-00; VFD4500C63B-00; VFD5000C43A-00; VFD5600C43A-00; VFD5600C63B-00; VFD6300C63B-00

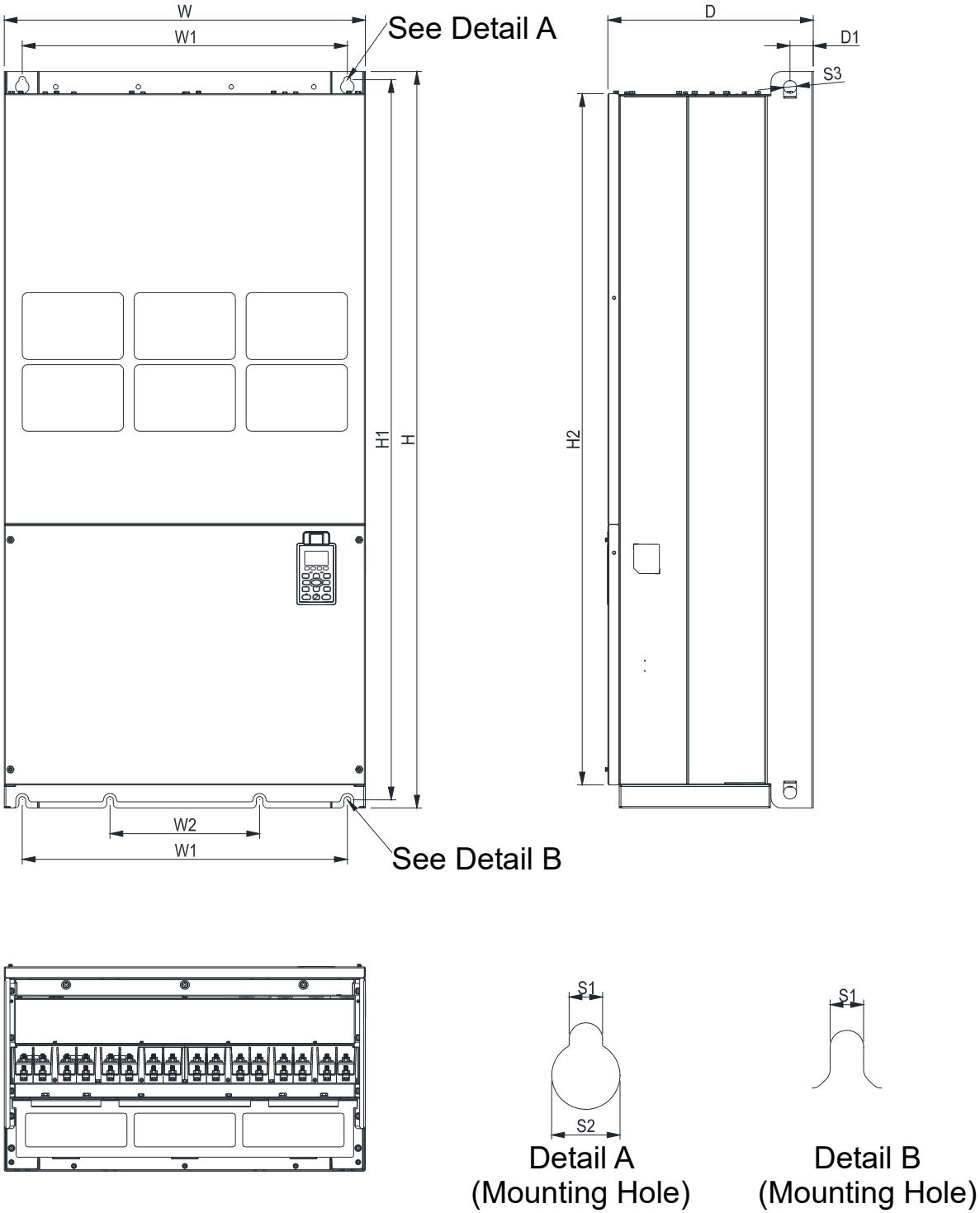

Figure 1-28

Unit: mm [inch]

Frame	W	H	D	W1	W2	W3	W4	W5	W6	H1	H2	H3	H4
H1	700.0 [27.56]	1435.0 [56.5]	398.0 [15.67]	630.0 [24.8]	290.0 [11.42]	-	-	-	-	1403.0 [55.24]	1346.6 [53.02]	-	-

Frame	H5	D1	D2	D3	D4	D5	D6	S1	S2	S3	Φ1	Φ2	Φ3
H1	-	45.0 [1.77]	-	-	-	-	-	13.0 [0.51]	26.5 [1.04]	25.0 [0.98]	-	-	-

Frame H

H3: VFD2800C43C-21; VFD3150C43C-21; VFD3550C43C-21; VFD4000C43C-21; VFD4500C43C-21; VFD5000C43C-21; VFD5600C43C-21

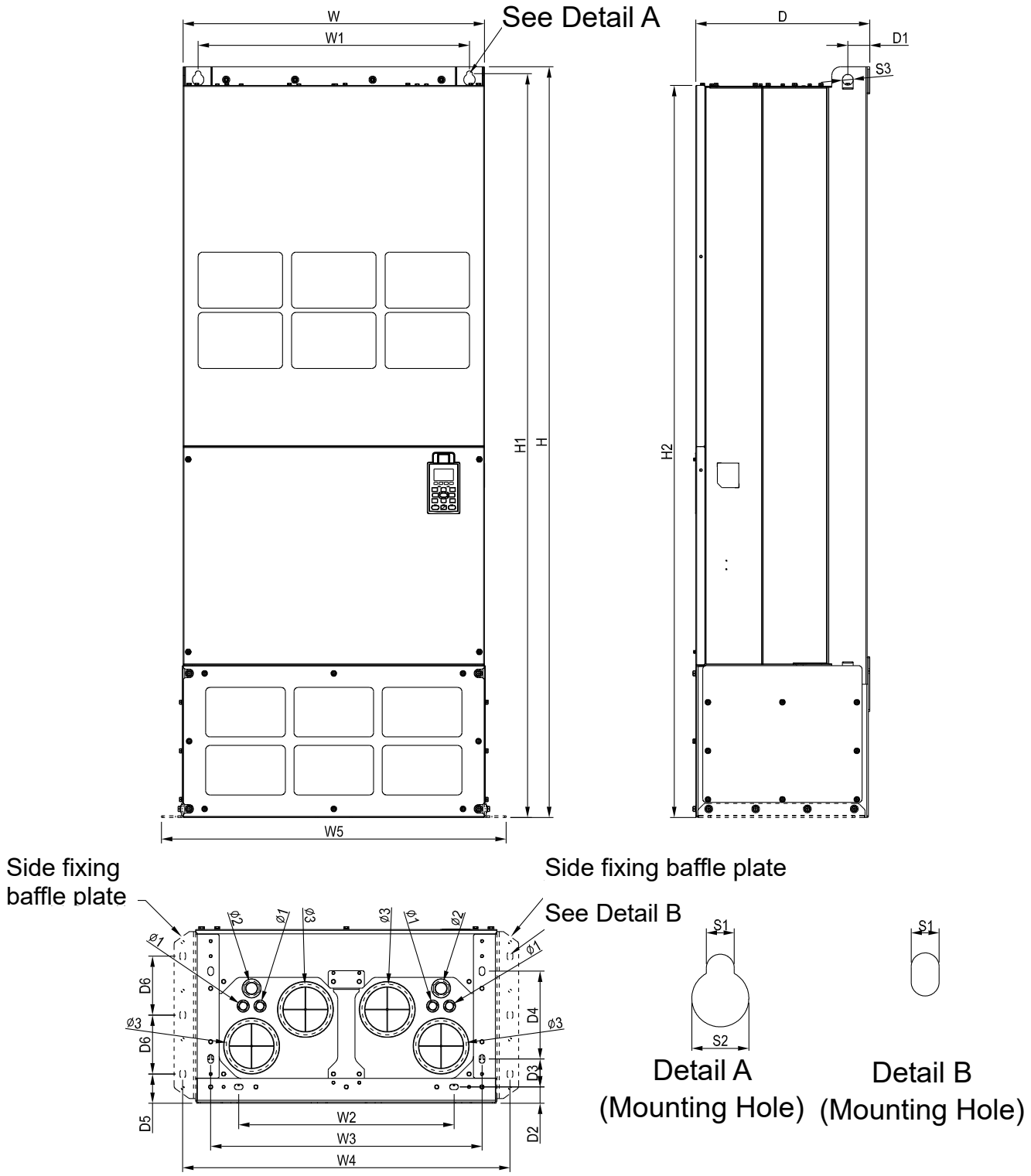

Figure 1-30

Unit: mm [inch]

Frame	W	H	D	W1	W2	W3	W4	W5	W6	H1	H2	H3	H4
H3	700.0 [27.56]	1745.0 [68.70]	404.0 [15.91]	630.0 [24.8]	500.0 [19.69]	630.0 [24.8]	760.0 [29.92]	800.0 [31.5]	-	1729.0 [68.07]	1701.6 [66.99]	-	-

Frame	H5	D1	D2	D3	D4	D5	D6	S1	S2	S3	Φ1	Φ2	Φ3
H3	-	51.0 [2.01]	38.0 [1.50]	65.0 [2.56]	204.0 [8.03]	68.0 [2.68]	137.0 [5.39]	13.0 [0.51]	26.5 [1.04]	25.0 [0.98]	22.0 [0.87]	34.0 [1.34]	117.5 [4.63]

690V Frame H

H2: VFD4000C63B-21; VFD4500C63B-21; VFD5600C63B-21; VFD6300C63B-21

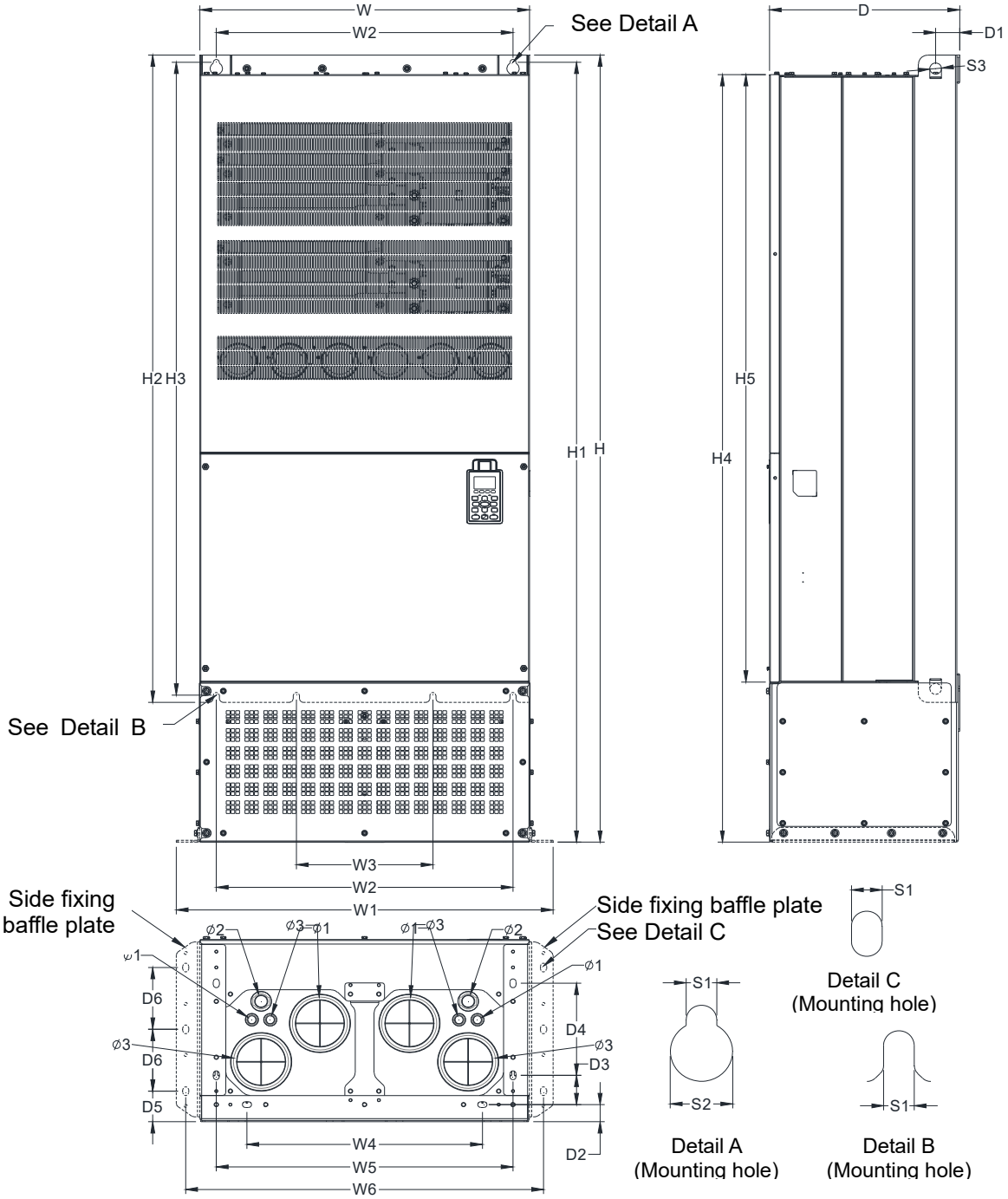

Figure 1-31

Unit: mm [inch]

Frame	W	H	D	W1	W2	W3	W4	W5	W6	H1	H2	H3	H4
H2	700.0 [27.56]	1745.0 [68.70]	404.0 [15.91]	630.0 [24.8]	500.0 [19.69]	630.0 [24.8]	760.0 [29.92]	800.0 [31.5]	-	1729.0 [68.07]	1701.6 [66.99]	-	-

Frame	H5	D1	D2	D3	D4	D5	D6	S1	S2	S3	Φ1	Φ2	Φ3
H2	-	51.0 [2.01]	38.0 [1.50]	65.0 [2.56]	204.0 [8.03]	68.0 [2.68]	137.0 [5.39]	13.0 [0.51]	26.5 [1.04]	25.0 [0.98]	22.0 [0.87]	34.0 [1.34]	117.5 [4.63]

Digital Keypad

KPC-CC01

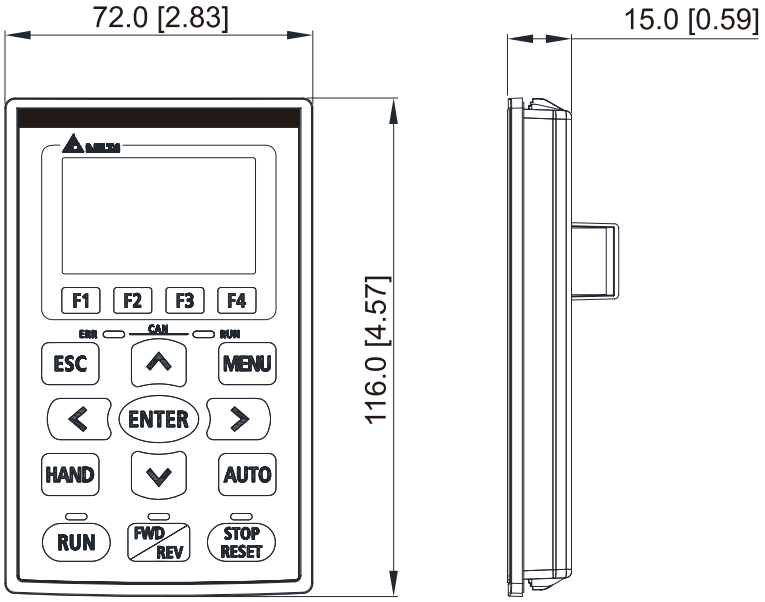

Figure 1-32

[This page intentionally left blank]

Chapter 2 Installation

2-1 Mounting Clearance

2-2 Airflow and Power Dissipation

2-1 Mounting Clearance

☑ Prevent fiber particles, scraps of paper, shredded wood, sawdust, metal particles, etc. from adhering to the heat sink.

☑ Install the AC motor drive in a metal cabinet. When installing one drive below another one, use a metal separator between the AC motor drives to prevent mutual heating and to prevent the risk of fire accident.

☑ Install the AC motor drive in Pollution Degree 2 environments only:
Normally only nonconductive pollution occurs and temporary conductivity caused by condensation is expected.

The appearances shown in the following figures are for reference only. The actual motor drives may look different.

Airflow direction: (Blue arrow) Inflow: (Red arrow) Outflow: (Black) Distance

Single drive installation (Frame A–H)

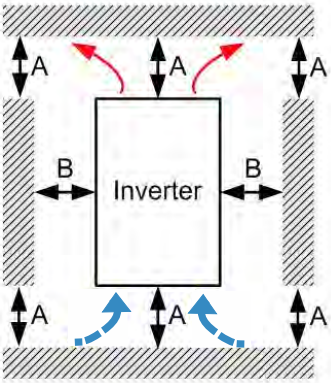

Figure 2-1

Side-by-side horizontal installation (Frame A–C)

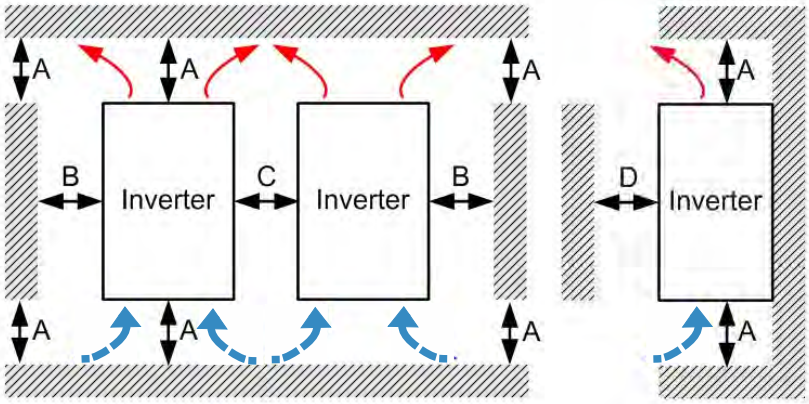

Figure 2-2

Multiple drives, single side-by-side horizontal installation (Frame G, H)

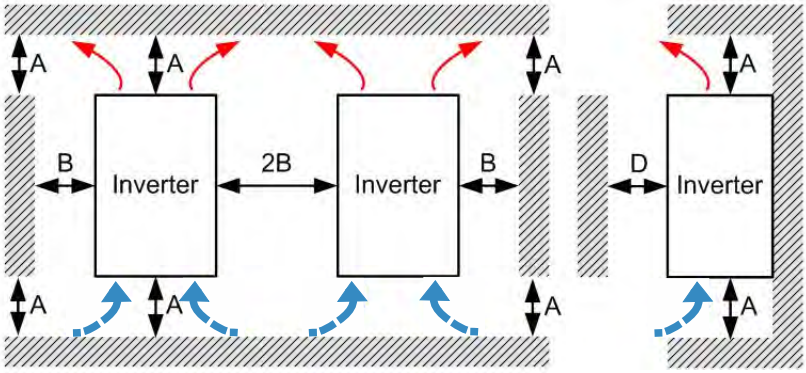

Figure 2-3

Multiple drives, side-by-side installation (Frame D0, D, E, F) Install metal separator between the drives.

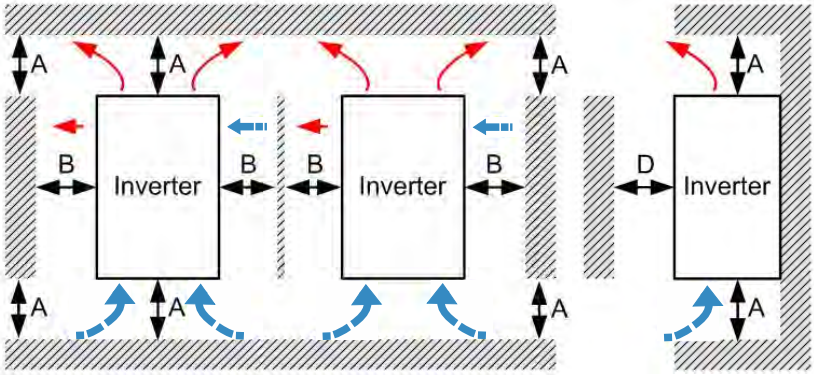

Figure 2-4

Multiple drives side-by-side vertical installation
Ta: Frame A–G Ta*: Frame H
When installing one AC motor drive below another one (top-bottom installation), use a metal separator between the drives to prevent mutual heating. The temperature measured at the fan's inflow side must be lower than the temperature measured at the operation side. If the fan's inflow temperature is higher, use a thicker or larger size of metal seperator. Operation temperature is the temperature measured at 50 mm away from the fan's inflow side (as shown in the figure below).
(Frame A–C)

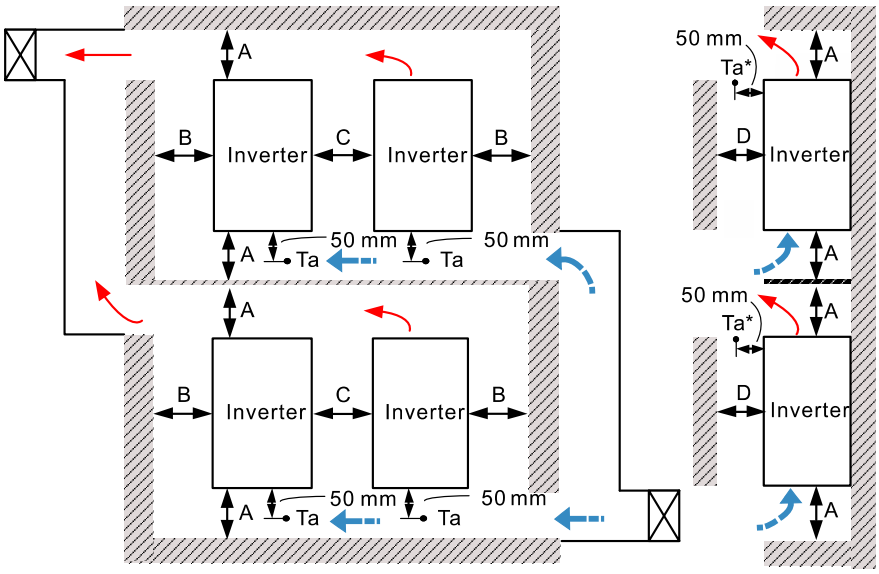

Figure 2-5

(Frame D0–G) Install metal separator between the drives

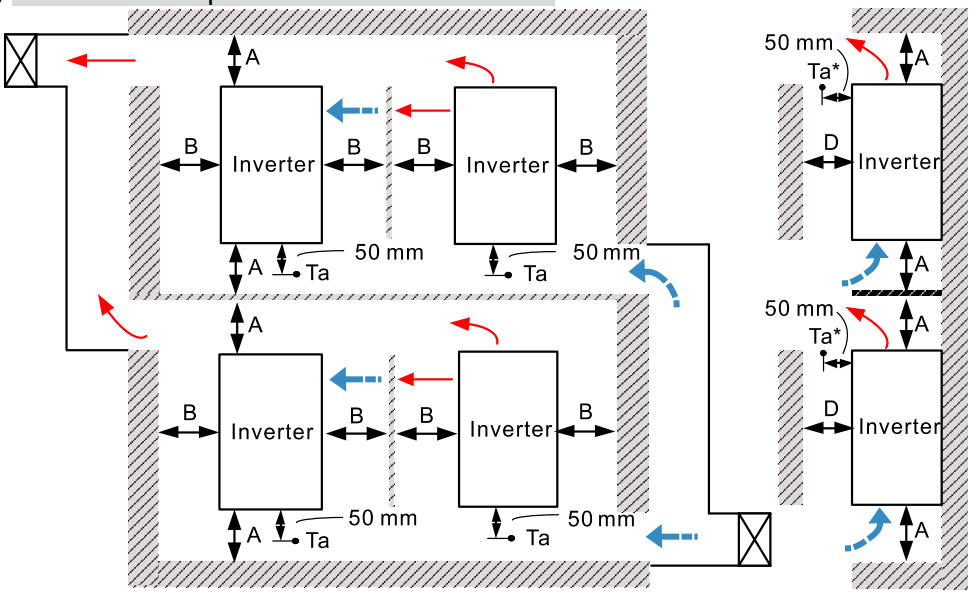

Figure 2-6

Minimum mounting clearance

Frame	A [mm]	B [mm]	C [mm]	D [mm]
A–C	60	30	10	0
D0–F	100	50	-	0
G	200	100	-	0
H	350	0	0	200 (Ta=Ta*=50°C)
H	350	0	0	100 (Ta=Ta*=40°C)

Table 2-1

NOTE

The minimum mounting clearances A–D stated in the table above apply to AC motor drives installation. Failing to follow the minimum mounting clearances may cause the fan to malfunction and heat dissipation problems.

Frame A	VFD007C23A-21; VFD007C43A-21; VFD007C4EA-21; VFD015C23A-21; VFD015C43A-21; VFD015C4EA-21; VFD015C53A-21; VFD022C23A-21; VFD022C43A-21; VFD022C4EA-21; VFD022C53A-21; VFD037C23A-21; VFD037C43A-21; VFD037C4EA-21; VFD037C53A-21; VFD040C43A-21; VFD040C4EA-21; VFD055C43A-21; VFD055C4EA-21
Frame B	VFD055C23A-21; VFD055C53A-21; VFD075C23A-21; VFD075C43A-21; VFD075C4EA-21; VFD075C53A-21; VFD110C23A-21; VFD110C43A-21; VFD110C4EA-21; VFD110C53A-21; VFD150C43A-21; VFD150C4EA-21; VFD150C53A-21
Frame C	VFD150C23A-21; VFD185C23A-21; VFD185C43A-21; VFD185C4EA-21; VFD185C63B-21; VFD220C23A-21; VFD220C43A-21; VFD220C4EA-21; VFD220C63B-21; VFD300C43A-21; VFD300C4EA-21; VFD300C63B-21; VFD370C63B-21
Frame D0	VFD370C43S-00; VFD370C43S-21; VFD450C43S-00; VFD450C43S-21
Frame D	VFD300C23A-00; VFD300C23A-21; VFD370C23A-00; VFD370C23A-21; VFD450C63B-00; VFD450C63B-21; VFD550C43A-00; VFD550C43A-21; VFD550C63B-00; VFD550C63B-21; VFD750C43A-00; VFD750C43A-21
Frame E	VFD450C23A-00; VFD450C23A-21; VFD550C23A-00; VFD550C23A-21; VFD750C23A-00; VFD750C23A-21; VFD750C63B-00; VFD750C63B-21; VFD900C43A-00; VFD900C43A-21; VFD900C63B-00; VFD900C63B-21; VFD1100C43A-00; VFD1100C43A-21; VFD1100C63B-00; VFD1100C63B-21; VFD1320C63B-00; VFD1320C63B-21
Frame F	VFD900C23A-00; VFD900C23A-21; VFD1320C43A-00; VFD1320C43A-21; VFD1600C43A-00; VFD1600C43A-21; VFD1600C63B-00; VFD1600C63B-21; VFD2000C63B-00; VFD2000C63B-21
Frame G	VFD1850C43A-00; VFD1850C43A-21; VFD2000C43A-00; VFD2000C43A-21; VFD2200C43A-00; VFD2200C43A-21; VFD2500C43A-00; VFD2500C43A-21; VFD2500C63B-00; VFD2500C63B-21; VFD3150C63B-00; VFD3150C63B-21
Frame H	VFD2800C43A-00; VFD2800C43C-21; VFD3150C43A-00; VFD3150C43C-21; VFD3550C43A-00; VFD3550C43C-21; VFD4000C43A-00; VFD4000C43C-21; VFD4000C63B-00; VFD4000C63B-21; VFD4500C43A-00; VFD4500C43C-21; VFD4500C63B-00; VFD4500C63B-21; VFD5000C43A-00; VFD5000C43C-21; VFD5600C43A-00; VFD5600C43C-21; VFD5600C63B-00; VFD5600C63B-21; VFD6300C63B-00; VFD6300C63B-21

Table 2-2

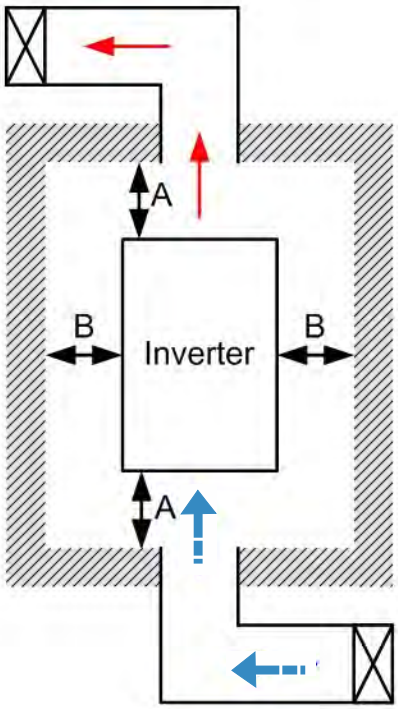

Figure 2-7

NOTE

※ The mounting clearance stated in the figure is for installing the drive in an open area. To install the drive in a confined space (such as cabinet or electric box), follow the following rules: (1) Keep the minimum mounting clearances. (2) Install a ventilation equipment or an air conditioner to keep surrounding temperature lower than operation temperature. (3) Refer to parameter setting and set up Pr.00-16, Pr.00-17, and Pr.06-55.

※ The table below shows the heat dissipation and the required air volume when installing a single drive in a confined space. When installing multiple drives, the required air volume shall be multiplied by the number of the drives.

※ Refer to the table below (Airflow Rate for Cooling) for ventilation equipment design and selection.

※ Refer to the table below (Power Dissipation for AC Motor Drive) for air conditioner design and selection.

※ Different control mode affects the derating. See Pr.06-55 for more information.

※ Ambient temperature durating curve shows the dertaing status in different temperature in relation to different protection level.

※ Refer to Section 9-7 for ambient temperature derating curve and derating curves under different control modes.

※ If UL Type 1 models need side-by-side installation, remove the top cover for Frame A–C. Do NOT install the conduit box for Frame D and above.

2-2 Airflow and Power Dissipation

Model No.	Airflow Rate for Cooling						Power Dissipation for AC Motor Drive		
	Flow Rate (Unit: cfm)			Flow Rate (Unit: m^3 / hr)			Power Dissipation (Unit: watt)		
	External	Internal	Total	External	Internal	Total	Loss External (Heat sink)	Internal	Total
VFD007C23A-21	-	-	-	-	-	-	33	27	61
VFD015C23A-21	14	-	14	24	-	24	56	31	88
VFD022C23A-21	14	-	14	24	-	24	79	36	115
VFD037C23A-21	10	-	10	17	-	17	113	46	159
VFD055C23A-21	40	14	54	68	24	92	197	67	264
VFD075C23A-21	66	14	80	112	24	136	249	86	335
VFD110C23A-21	58	14	73	99	24	124	409	121	529
VFD150C23A-21	166	12	178	282	20	302	455	161	616
VFD185C23A-21	166	12	178	282	20	302	549	184	733
VFD220C23A-21	166	12	178	282	20	302	649	216	865
VFD300C23A-00 VFD300C23A-21	179	30	209	304	51	355	913	186	1099
VFD370C23A-00 VFD370C23A-21	179	30	209	304	51	355	1091	220	1311
VFD450C23A-00 VFD450C23A-21	228	73	301	387	124	511	1251	267	1518
VFD550C23A-00 VFD550C23A-21	228	73	301	387	124	511	1401	308	1709
VFD750C23A-00 VFD750C23A-21	246	73	319	418	124	542	1770	369	2139
VFD900C23A-00 VFD900C23A-21	224	112	336	381	190	571	2304	484	2788
VFD007C43A-21 VFD007C4EA-21	-	-	-	-	-	-	33	25	59
VFD015C43A-21 VFD015C4EA-21	-	-	-	-	-	-	45	29	74
VFD022C43A-21 VFD022C4EA-21	14	-	14	24	-	24	71	33	104
VFD037C43A-21 VFD037C4EA-21	10	-	10	17	-	17	103	38	141
VFD040C43A-21 VFD040C4EA-21	10	-	10	17	-	17	116	42	158
VFD055C43A-21 VFD055C4EA-21	10	-	10	17	-	17	134	46	180
VFD075C43A-21 VFD075C4EA-21	40	14	54	68	24	92	216	76	292
VFD110C43A-21 VFD110C4EA-21	66	14	80	112	24	136	287	93	380
VFD150C43A-21 VFD150C4EA-21	58	14	73	99	24	124	396	122	518
VFD185C43A-21 VFD185C4EA-21	99	21	120	168	36	204	369	138	507
VFD220C43A-21 VFD220C4EA-21	99	21	120	168	36	204	476	158	635
VFD300C43A-21 VFD300C4EA-21	126	21	147	214	36	250	655	211	866
VFD370C43S-00 VFD370C43S-21	179	30	209	304	51	355	809	184	993
VFD450C43S-00 VFD450C43S-21	179	30	209	304	51	355	929	218	1147
VFD550C43A-00 VFD550C43A-21	179	30	209	304	51	355	1156	257	1413
VFD750C43A-00 VFD750C43A-21	186	30	216	316	51	367	1408	334	1742

Model No.	Airflow Rate for Cooling						Power Dissipation for AC Motor Drive		
	Flow Rate (Unit: cfm)			Flow Rate (Unit: m^3 / hr)			Power Dissipation (Unit: watt)		
	External	Internal	Total	External	Internal	Total	Loss External (Heat sink)	Internal	Total
VFD900C43A-00 VFD900C43A-21	257	73	330	437	124	561	1693	399	2092
VFD1100C43A-00 VFD1100C43A-21	223	73	296	379	124	503	2107	491	2599
VFD1320C43A-00 VFD1320C43A-21	224	112	336	381	190	571	2502	579	3081
VFD1600C43A-00 VFD1600C43A-21	289	112	401	491	190	681	3096	687	3783
VFD1850C43A-00 VFD1850C43A-21			454			771			4589
VFD2000C43A-00 VFD2000C43A-21			454			771			5050
VFD2200C43A-00 VFD2200C43A-21			454			771			5772
VFD2500C43A-00 VFD2500C43A-21			454			771			6063
VFD2800C43A-00 VFD2800C43C-21			769			1307			6381
VFD3150C43A-00 VFD3150C43C-21			769			1307			7156
VFD3550C43A-00 VFD3550C43C-21			769			1307			8007
VFD4000C43A-00 VFD4000C43C-21			769			1307			9025
VFD4500C43A-00 VFD4500C43C-21			769			1307			11894
VFD5000C43A-00 VFD5000C43C-21			952.9			1618.9			12500
VFD5600C43A-00 VFD5600C43C-21			952.9			1618.9			14350
VFD015C53A-21	-	-	-	-	-	-	39.5	13.0	53
VFD022C53A-21	-	-	-	-	-	-	55.0	22.0	77
VFD037C53A-21	0.006	-	0.006	13.6	-	13.6	86.8	42.7	130
VFD055C53A-21	0.019	0.007	0.026	40.0	14.5	54.5	124.6	67.9	193
VFD075C53A-21	0.019	0.007	0.026	40.0	14.5	54.5	143.5	119.0	263
VFD110C53A-21	0.019	0.007	0.026	40.0	14.5	54.5	222.2	162.8	385
VFD150C53A-21	0.019	0.007	0.026	40.0	14.5	54.5	308.5	216.5	525
VFD185C63B-21	90.0	21.3	111.4	153.0	36.2	189.2	317.5	145.0	462.5
VFD220C63B-21	90.0	21.3	111.4	153.0	36.2	189.2	408.2	141.8	550.0
VFD300C63B-21	90.0	21.3	111.4	153.0	36.2	189.2	492.7	257.3	750.0
VFD370C63B-21	89.0	21.3	110.3	151.2	36.2	187.5	641.6	283.4	925.0
VFD450C63B-00 VFD450C63B-21	175.9	36.4	212.3	298.8	61.8	360.6	718.2	406.8	1125.0
VFD550C63B-00 VFD550C63B-21	175.9	36.4	212.3	298.8	61.8	360.6	890.1	484.9	1375.0
VFD750C63B-00 VFD750C63B-21	264.6	90.6	355.2	449.6	153.9	603.5	1356.0	519.0	1875.0
VFD900C63B-00 VFD900C63B-21	264.6	90.6	355.2	449.6	153.9	603.5	1652.8	597.2	2250.0
VFD1100C63B-00 VFD1100C63B-21	264.6	90.6	355.2	449.6	153.9	603.5	1960.3	789.7	2750.0
VFD1320C63B-00 VFD1320C63B-21	264.6	90.6	355.2	449.6	153.9	603.5	2230.8	1069.2	3300.0
VFD1600C63B-00 VFD1600C63B-21	248.1	135.3	383.4	421.6	229.9	651.4	2627.3	1372.7	4000.0

Model No.	Airflow Rate for Cooling						Power Dissipation for AC Motor Drive		
	Flow Rate (Unit: cfm)			Flow Rate (Unit: m^3 / hr)			Power Dissipation (Unit: watt)		
	External	Internal	Total	External	Internal	Total	Loss External (Heat sink)	Internal	Total
VFD2000C63B-00 VFD2000C63B-21	248.1	135.3	383.4	421.6	229.9	651.4	3415.0	1585.0	5000.0
VFD2500C63B-00 VFD2500C63B-21			409.7			696.0	4751.7	1498.3	6250.0
VFD3150C63B-00 VFD3150C63B-21			409.7			696.0	5695.4	2179.6	7875.0
VFD4000C63B-00 VFD4000C63B-21			563.0			956.4	6796.2	3203.8	10000.0
VFD4500C63B-00 VFD4500C63B-21			952.9			1618.9	7313.6	3936.4	11250.0
VFD5600C63B-00 VFD5600C63B-21			952.9			1618.9	9553.4	4446.6	14000.0
VFD6300C63B-00 VFD6300C63B-21			952.9			1618.9	11042.4	4707.6	15750.0

※ The required airflow shown in the table is for installing single drive in a confined space.
※ When installing multiple drives, the required air volume should be the required air volume for single drive X the number of the drives.

※ The heat dissipation shown in the table is for installing single drive in a confined space.
※ When installing multiple drives, volume of heat dissipation should be the heat dissipated for single drive X the number of the drives.
※ Heat dissipation for each model is calculated by rated voltage, current and default carrier.

Table 2-3

[This page intentionally left blank]

Chapter 3 Unpacking

3-1 Unpacking

3-2 The Lifting Hook

The AC motor drive should be kept in the shipping carton or crate before installation. In order to retain the warranty coverage, the AC motor drive should be stored properly when it is not to be used for an extended period of time.

3-1 Unpacking

Follow these steps to unpack the AC motor drive:

Frame E	
Unpacking 1 (VFDXXXCXXA-00, VFDXXXC63B-00) Loosen the 16 screws at the four corners of the crate, and then remove the iron plates. 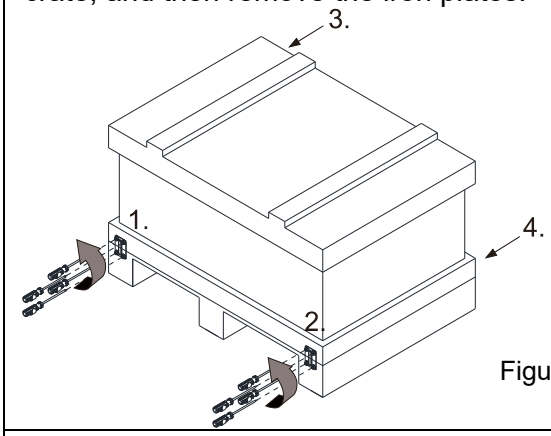 Figure 3-1	Unpacking 2 (VFDXXXCXXA-21, VFDXXXC63B-21) Loosen the 16 screws at the four corners of the crate, and then remove the iron plates. 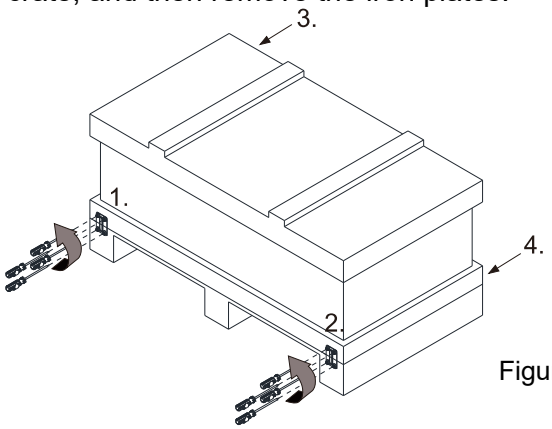 Figure 3-5
Remove the top cover, take out the EPEs and the manual. 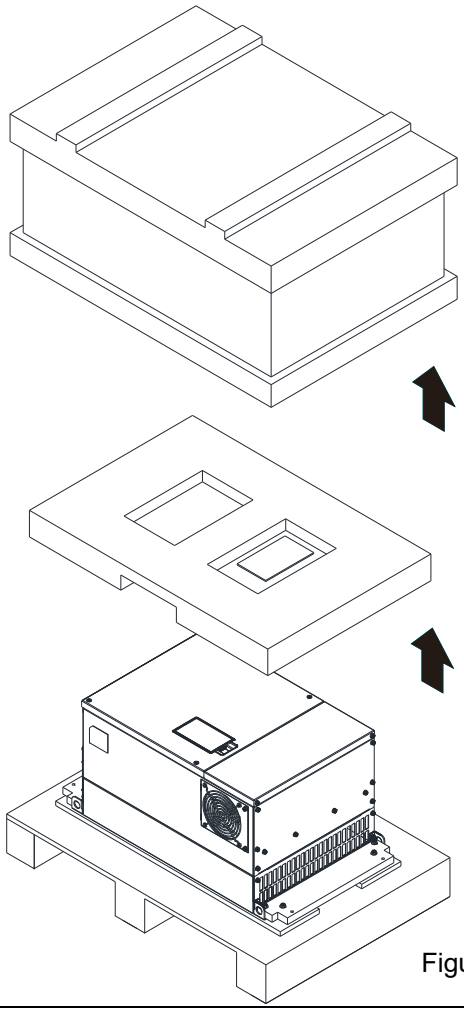 Figure 3-2	Remove the top cover, take out the EPEs, rubber and the manual. 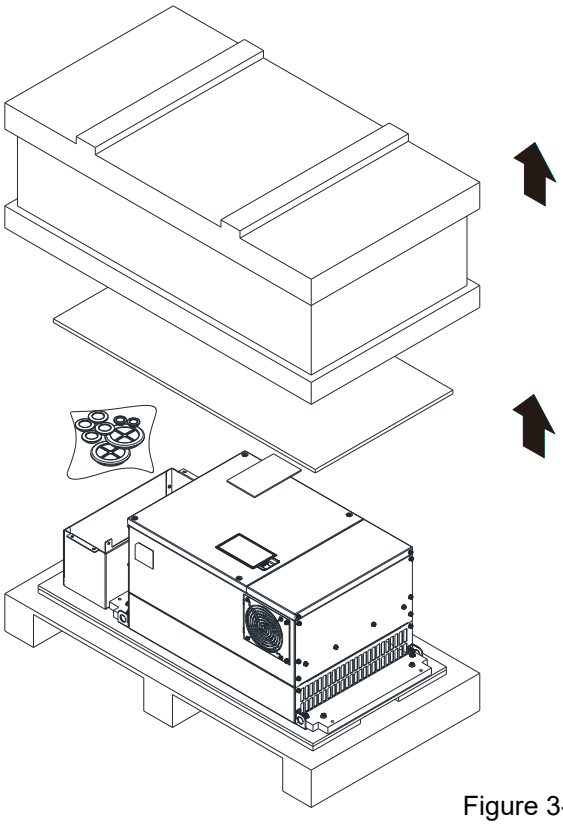 Figure 3-6

Loosen the eight screws fasten the drive on the pallet, and then remove the wood plate. 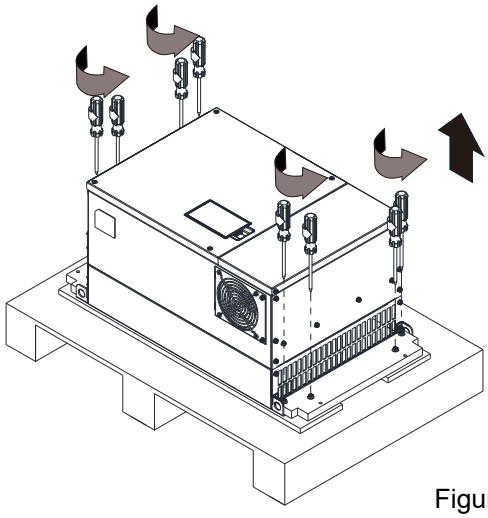 Figure 3-3	Loosen the ten screws fasten the drive on the pallet, and then remove the wood plates and the conduit box. 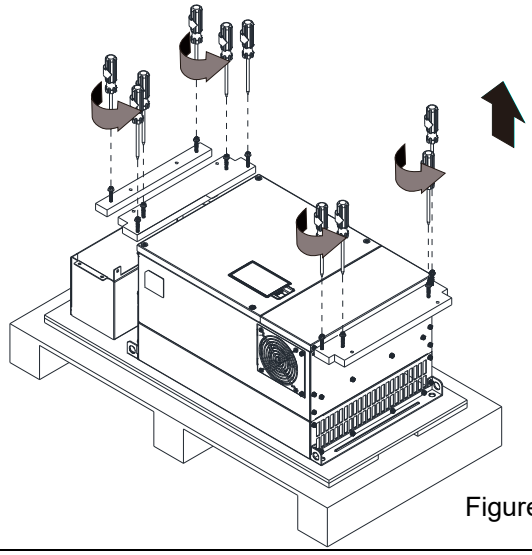 Figure 3-7
Lift the drive by hooking the lifting hole. It is now ready for installation. 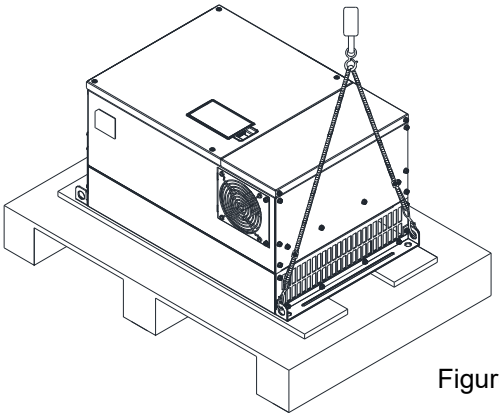 Figure 3-4	Lift the drive by hooking the lifting hole. It is now ready for installation. 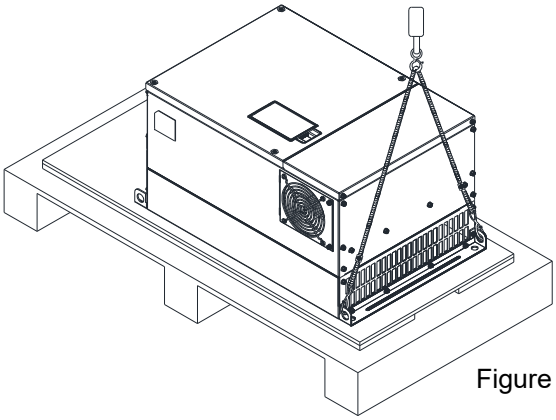 Figure 3-8

Frame F

Unpacking 1

(VFDXXXCXXA-00, VFDXXXC63B-00)

Remove the six buckles fixed on the crate with a flat-head screwdriver, see the figure below.

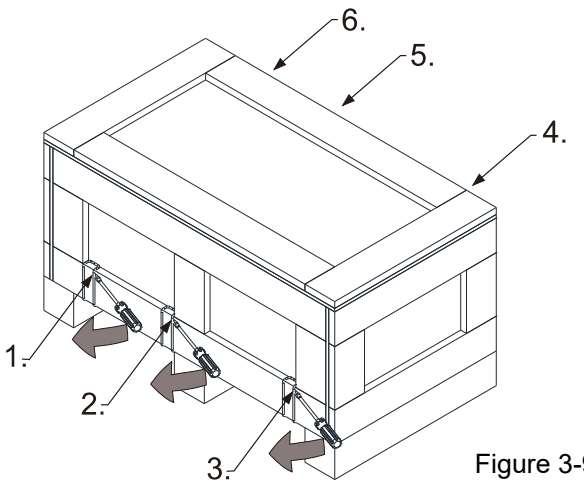

Figure 3-9

Remove the top cover, take out the EPEs and the manual.

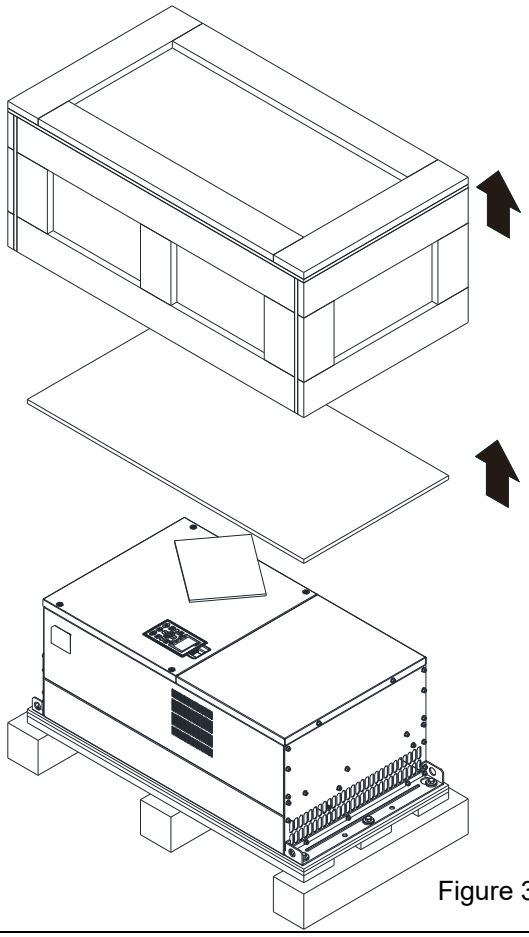

Figure 3-10

Unpacking 2

(VFDXXXCXXA-21, VFDXXXC63B-21)

Remove the six buckles fixed on the crate with a flat-head screwdriver, see the figure below.

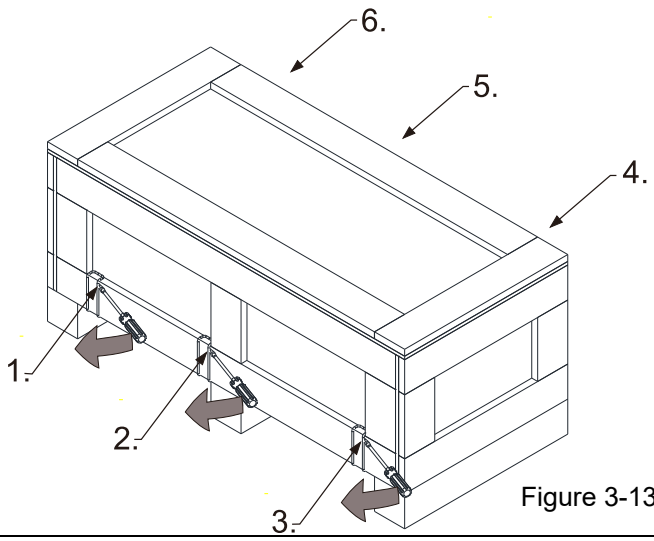

Figure 3-13

Remove the top cover, take out the EPEs, rubber and the manual.

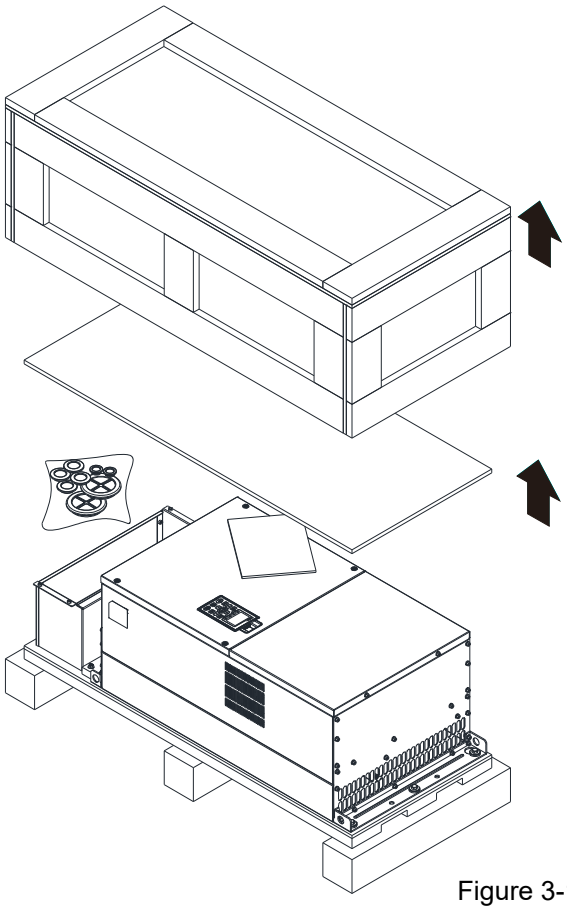

Figure 3-14

Loosen the five screws fasten the drive on the pallet, see the figure below. 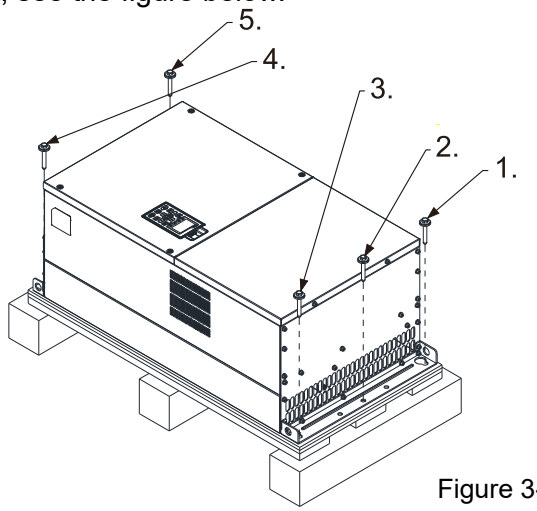 Figure 3-11	Loosen the five screws fasten the drive on the pallet, and then remove the wood plates and conduit box. 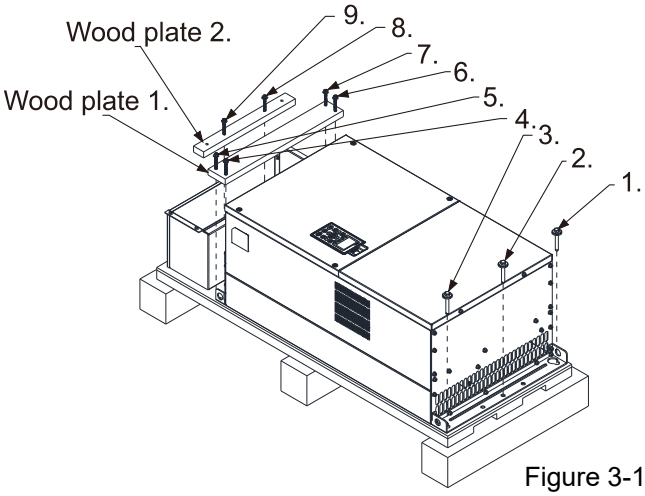 Figure 3-15
Lift the drive by hooking the lifting hole. It is now ready for installation. 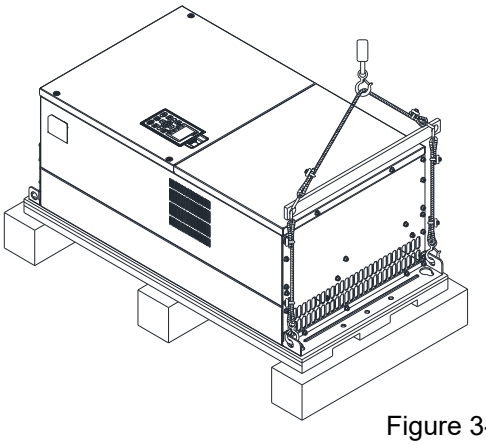 Figure 3-12	Lift the drive by hooking the lifting hole. It is now ready for installation. 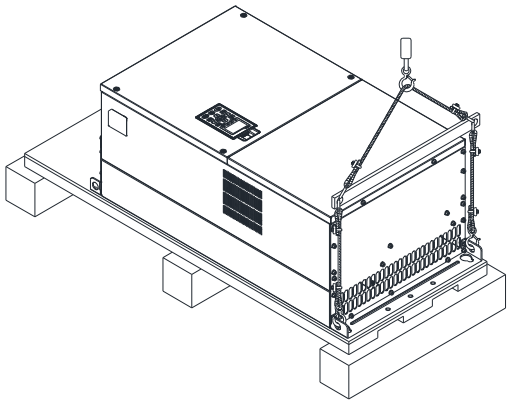 Figure 3-16

Frame G

Unpacking 1

(VFDXXXCXXA-00, VFDXXXC63B-00)

Remove the six buckles fixed on the crate with a flat-head screwdriver, see the figure below.

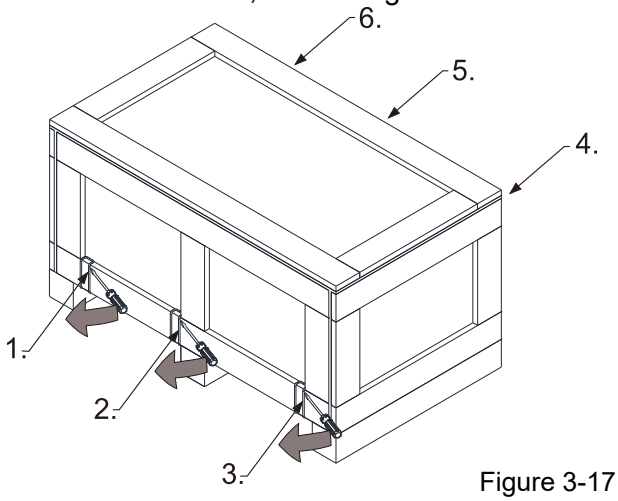

Figure 3-17

Remove the top cover, take out the EPEs and the manual.

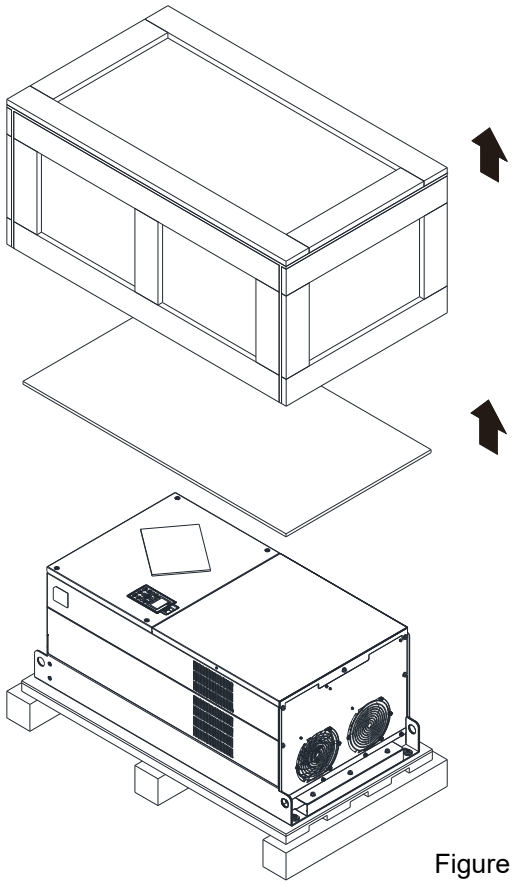

Figure 3-18

Unpacking 2

(VFDXXXCXXA-21, VFDXXXC63B-21)

Remove the six buckles fixed on the crate with a flat-head screwdriver, see the figure below.

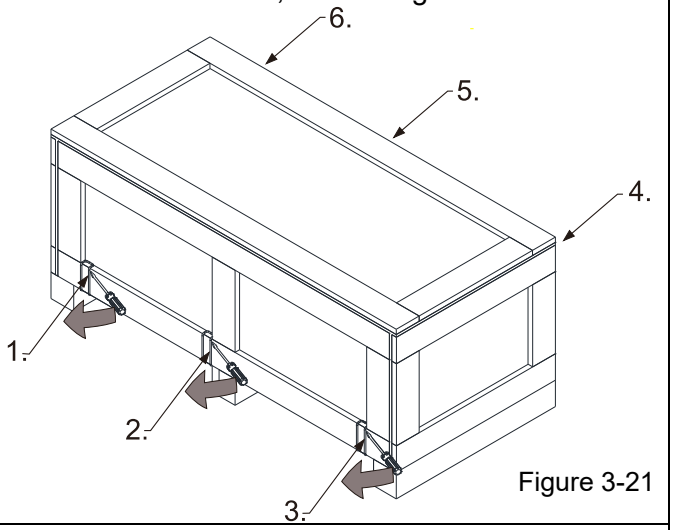

Figure 3-21

Remove the top cover, take out the EPEs, rubber and the manual.

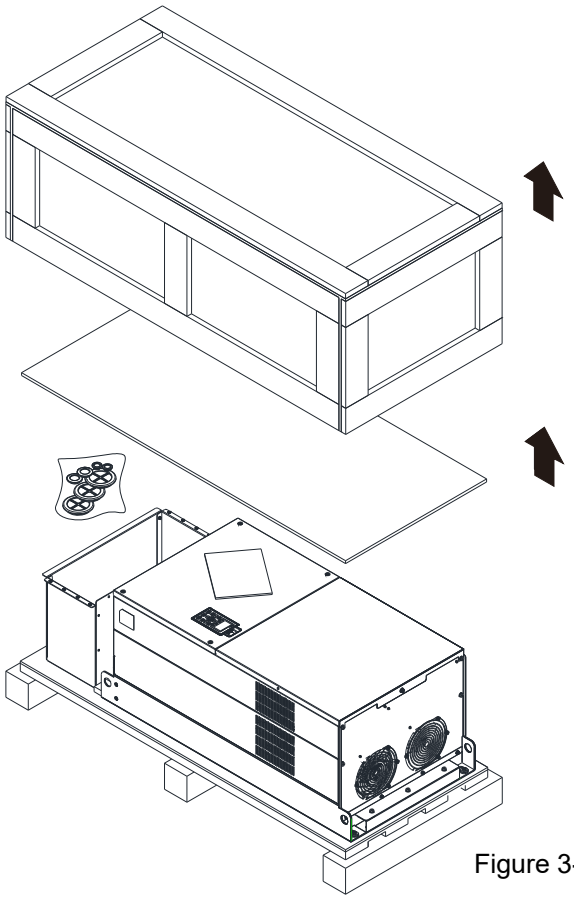

Figure 3-22

Loosen the five screws fasten the drive on the pallet, see the figure below.

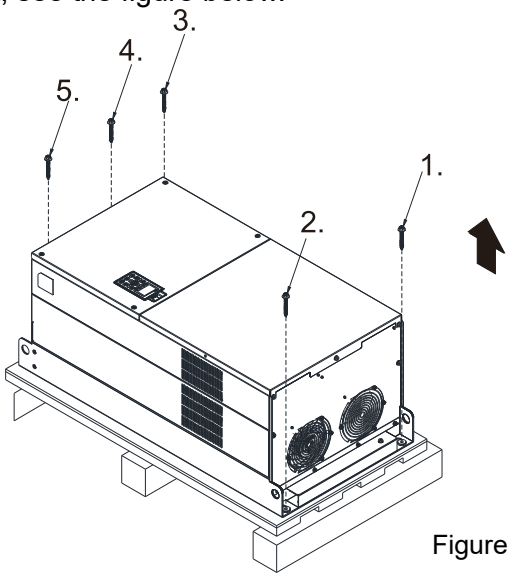

Figure 3-19

Loosen the 12 screws fasten the drive on the pallet, and then remove the wood plates and conduit box.

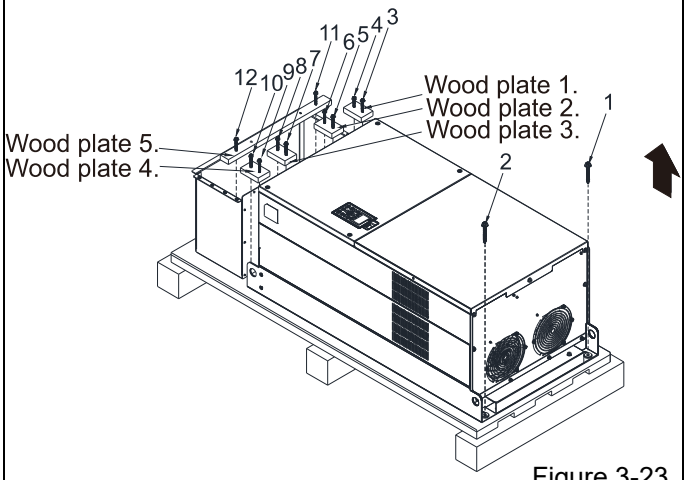

Figure 3-23

Lift the drive by hooking the lifting hole. It is now ready for installation.

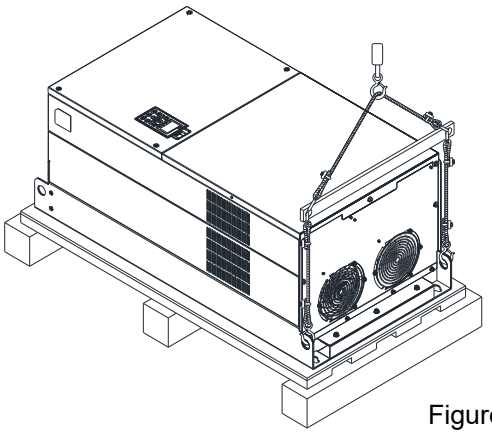

Figure 3-20

Lift the drive by hooking the lifting hole. It is now ready for installation.

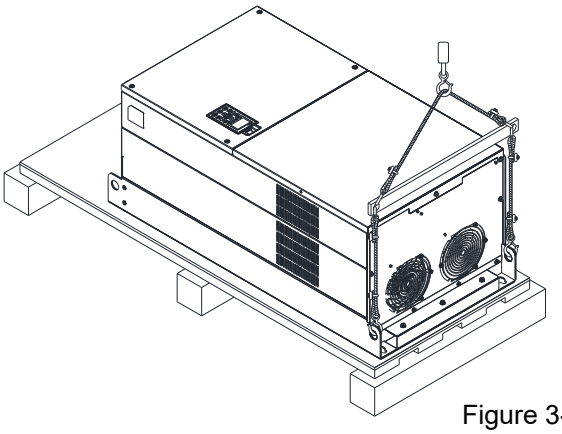

Figure 3-24

Frame H

Unpacking 1 (VFDXXXC43A-00)

Remove the eight buckles fixed on the crate with a flat-head screwdriver, see the figure below.

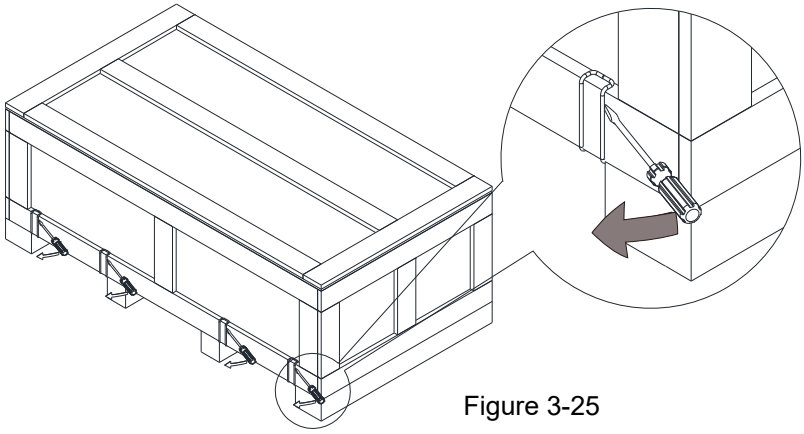

Figure 3-25

Remove the top cover, take out the EPEs and the manual.

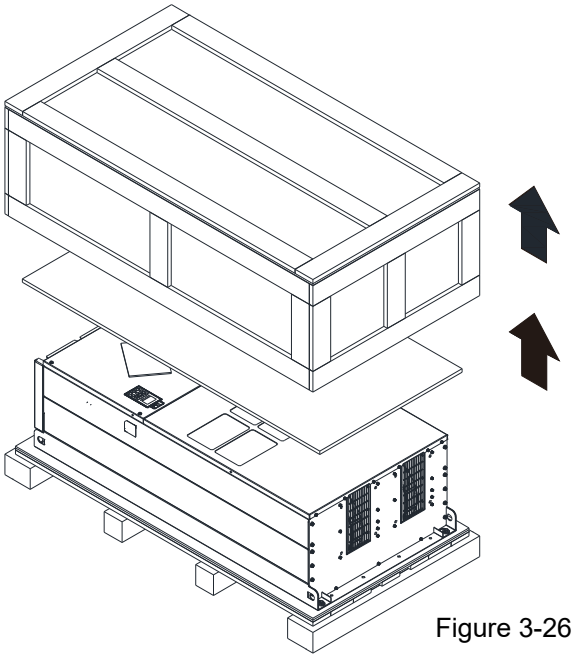

Figure 3-26

Loosen the six screws fasten the drive on the pallet, and then remove six metal washers and six plastic washers. See the figure below.

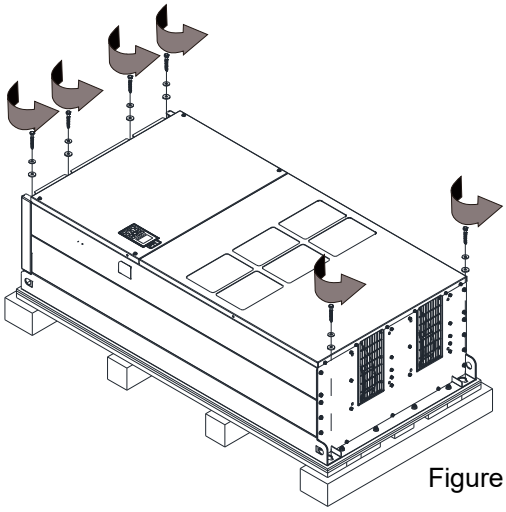

Figure 3-27

Lift the drive by hooking the lifting hole. It is now ready for installation.

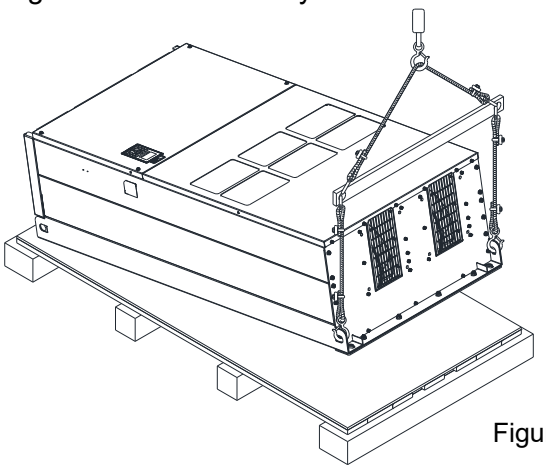

Figure 3-28

Unpacking 2 (VFDXXXC43C-21)

Remove the eight buckles fixed on the crate with a flat-head screwdriver, see the figure below.

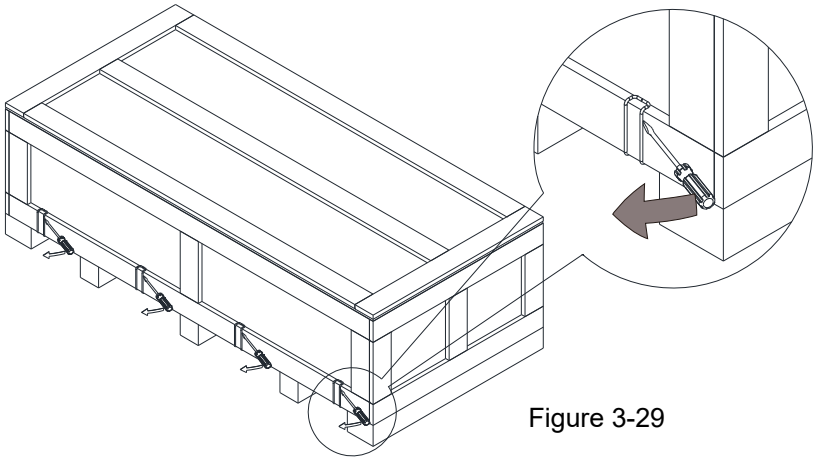

Figure 3-29

Remove the cover, take out the EPEs and the manual.

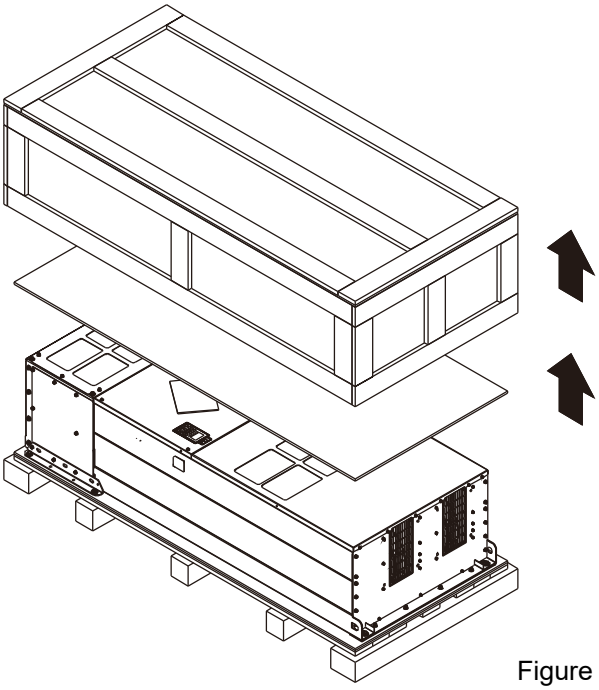

Figure 3-30

Loosen the six screws fasten the drive on the pallet, and then remove six metal washers and six plastic washers. See the figure below.

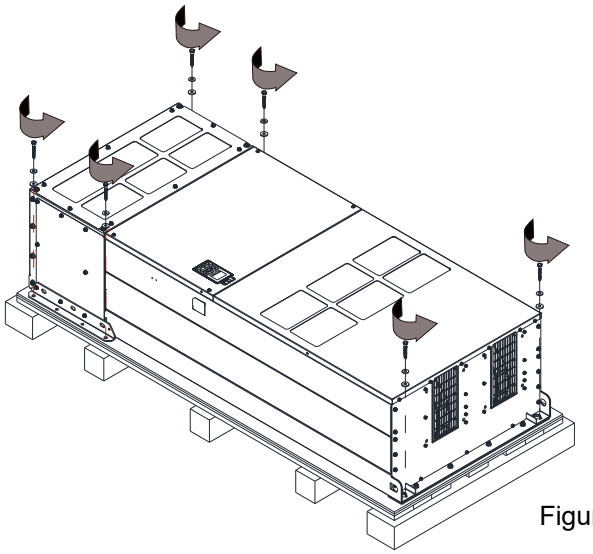

Figure 3-31

Loosen the six M6 screws and the iron plates (see the figure below). You can use the removed screws and iron plates to fix the drive from outside.

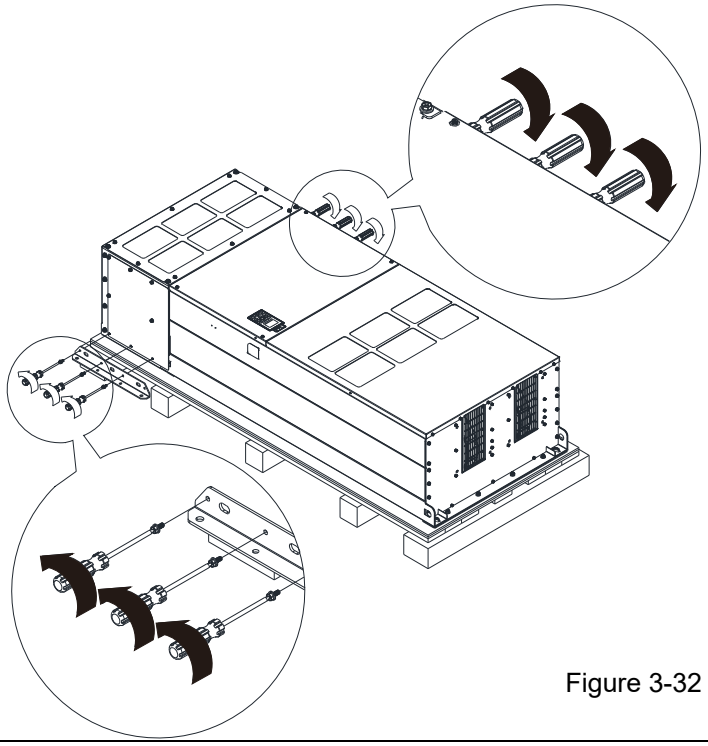

Figure 3-32

Fix the drive from the inside

Loosen the 18 M6 screws and remove the covers (see the figure 3-34). After fixing the drive and the cover for cables (see the figure 3-33), fasten the other covers back (see the figure 3-34).

Torque: 35–45 kg-cm / [30.38–39.06 lb-in.] / [3.4–4.4 Nm]

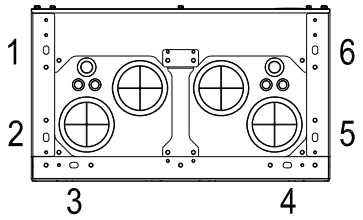

Figure 3-33

Cover for cables (use M12 screws)

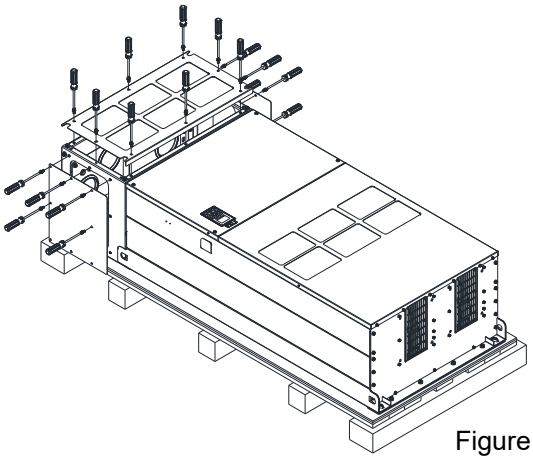

Figure 3-34

Fix the drive from the outside

Loosen the eight M8 screws, and then use these eight M8 screws to fix the iron plates (removed at the last step) to the drive, see the figure below.

Torque: 150–180 kg-cm / [130.20–156.24 lb-in.] / [14.7–17.6 Nm]

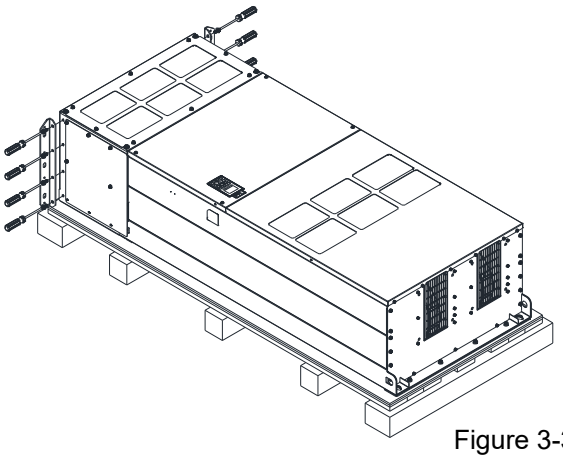

Figure 3-36

Tighten the six M6 screws back, see the figure below. Torque: 35–45 kg-cm / [30.38–39.06 lb-in] / [3.4–4.4 Nm]

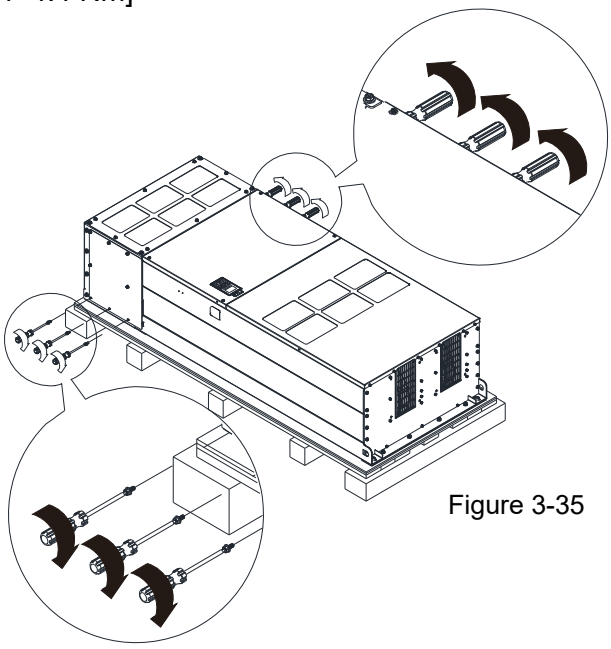

Figure 3-35

Tighten the six M6 screws that removed in the figure 3-32 back, see the figure below.

Torque: 35–45 kg-cm / [30.38–39.06 lb-in] / [3.4–4.4 Nm]

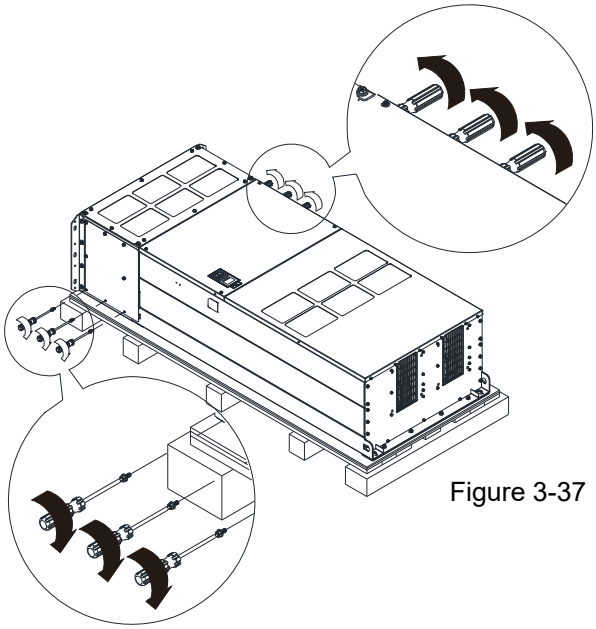

Figure 3-37

Lift the drive by hooking the lifting hole. It is now ready for installation.

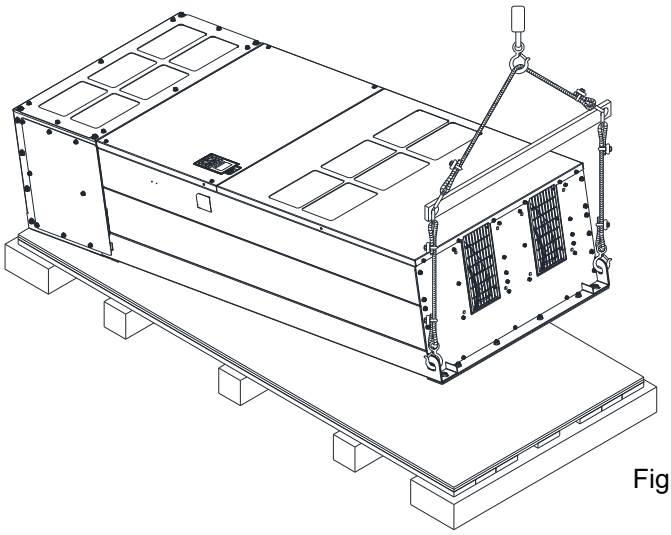

Figure 3-38

690V Frame H

Unpacking 1 (VFDXXXC63B-00)

Remove the eight buckles fixed on the crate with a flat-head screwdriver, see the figure below.

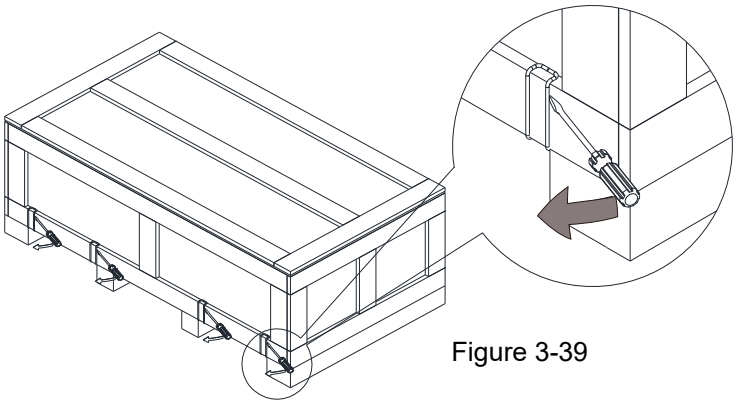

Figure 3-39

Remove the top cover, take out the EPEs and the manual.

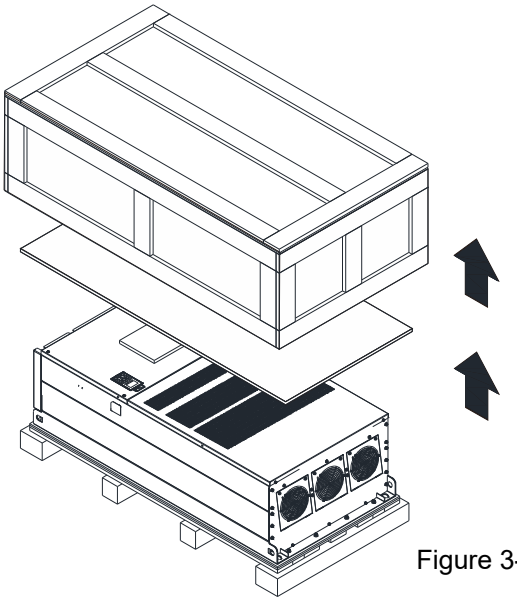

Figure 3-40

Loosen the six screws fasten the drive on the pallet, and then remove six metal washers and six plastic washers. See the figure below.

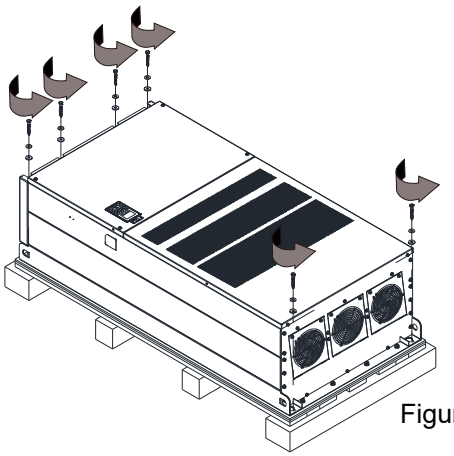

Figure 3-41

Lift the drive by hooking the lifting hole. It is now ready for installation.

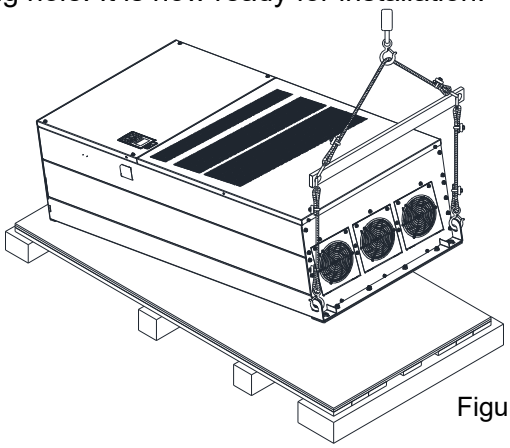

Figure 3-42

Unpacking 2 (VFDXXXC63B-21)

Remove the eight buckles fixed on the crate with a flat-head screwdriver, see the figure below.

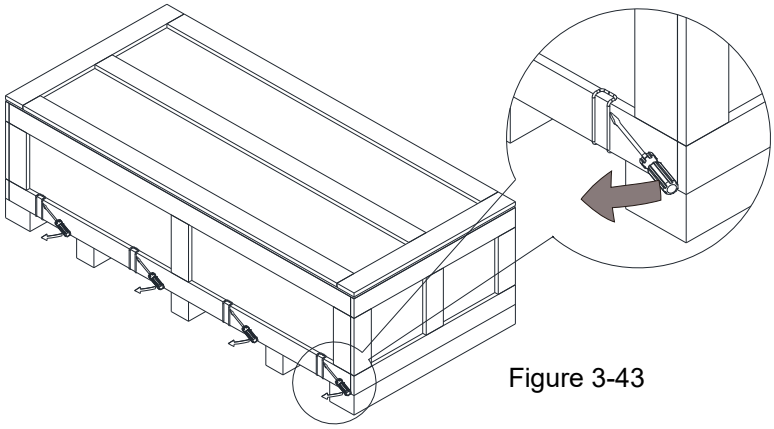

Figure 3-43

Remove the top cover, take out the EPEs, rubber and the manual.

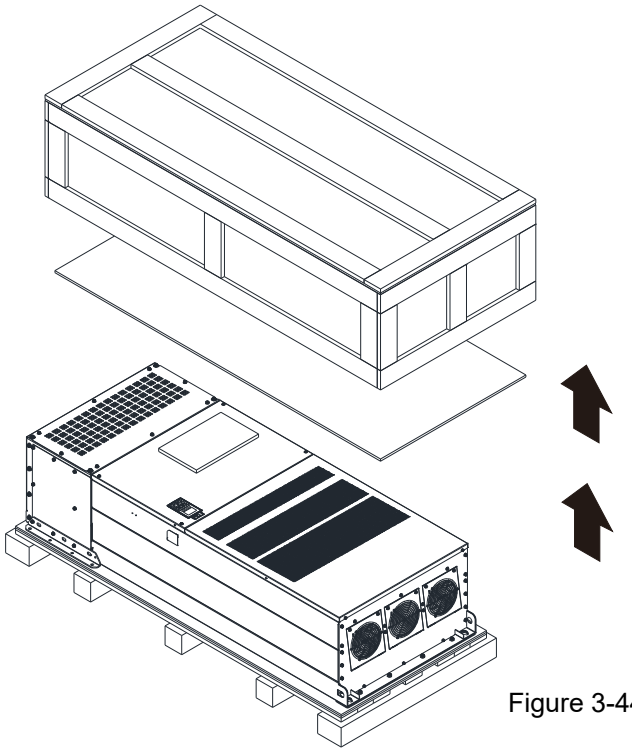

Figure 3-44

Loosen the six screws fasten the drive on the pallet, and then remove six metal washers and six plastic washers. See the figure below.

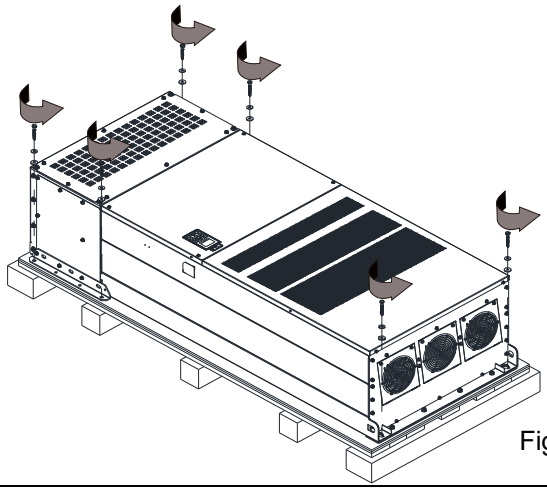

Figure 3-45

Loosen the six M6 screws and the iron plates (see the figure below). You can use the removed screws and iron plates to fix the drive from the outside.

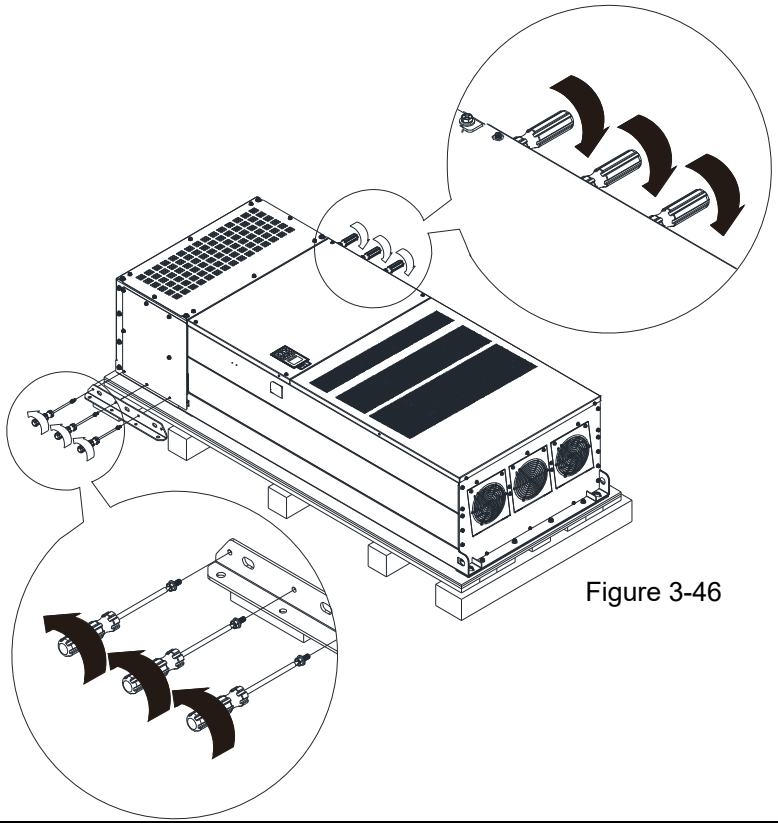

Figure 3-46

Fix the drive from the inside	Fix the drive from the outside
Loosen the 18 M6 screws and remove the covers (see the figure 3-48). After fixing the drive and the cover for cables (see figure 3-47), fasten the other covers back (see the figure 3-48). Torque: 35–45 kg-cm / [30.38–39.06 lb-in.] [3.43–3.92 Nm] 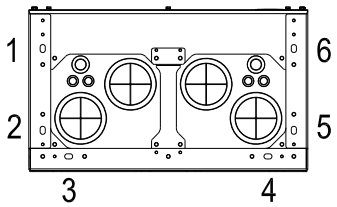 Figure 3-47 Cover for cables (use M12 screws)	Loosen the eight M8 screws, and then use these eight M8 screws to fix the iron plates (removed at the last step) to the drive, see the figure below. Torque: 150–180 kg-cm / [130.20–156.24 lb-in.] [14.7–17.64 Nm] 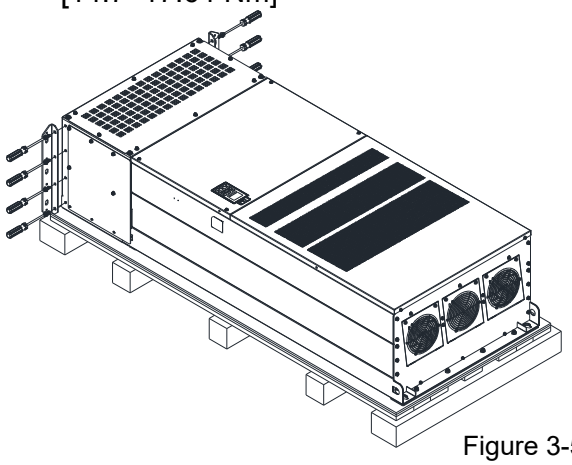 Figure 3-50
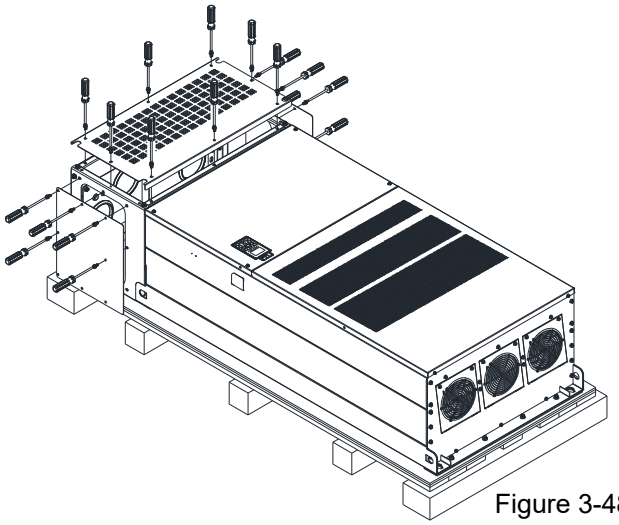 Figure 3-48	
Tighten the six M6 screws back, see the figure below. 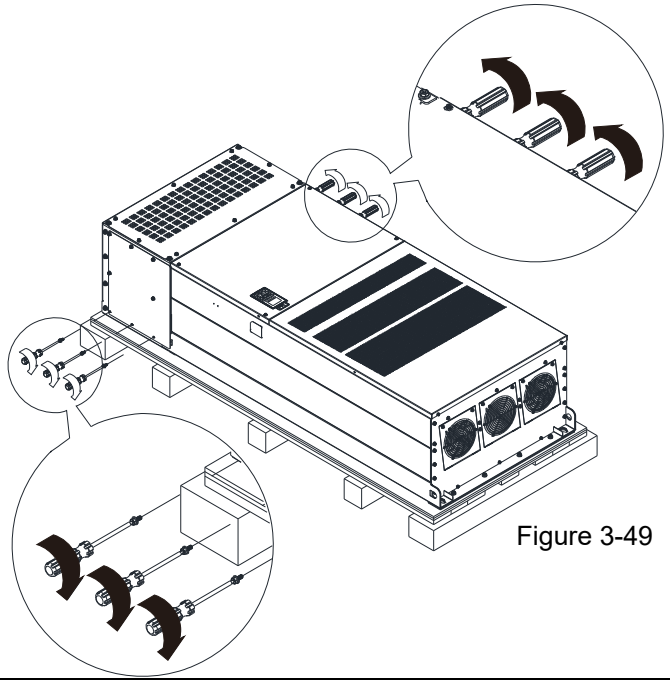 Figure 3-49	Tighten the six M6 screws back, see the figure below. 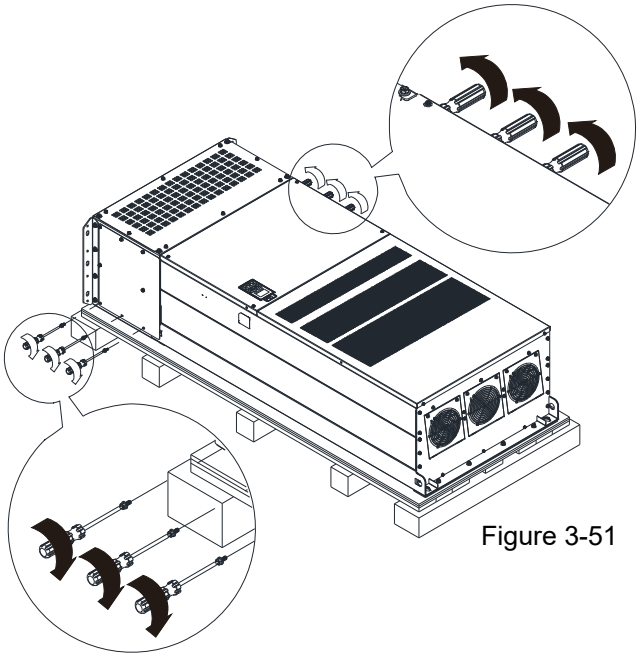 Figure 3-51

Lift the drive by hooking the lifting hole. It is now ready for installation.

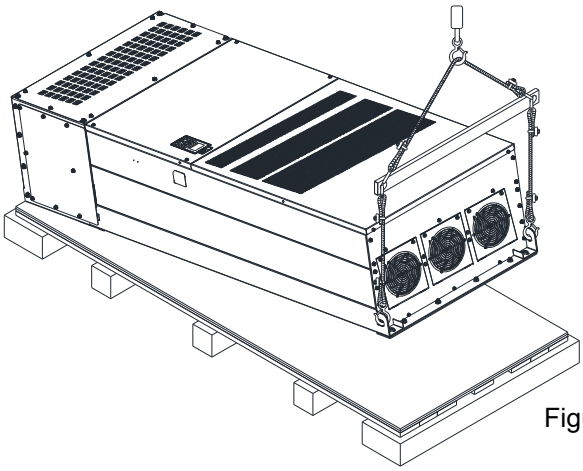

Figure 3-52

Frame H: Fix the drive

VFDXXXC43A-00

Screw: M12*6

Torque: 340–420 kg-cm / [295.1–364.6 lb-in.] / [33.3–41.2 Nm]

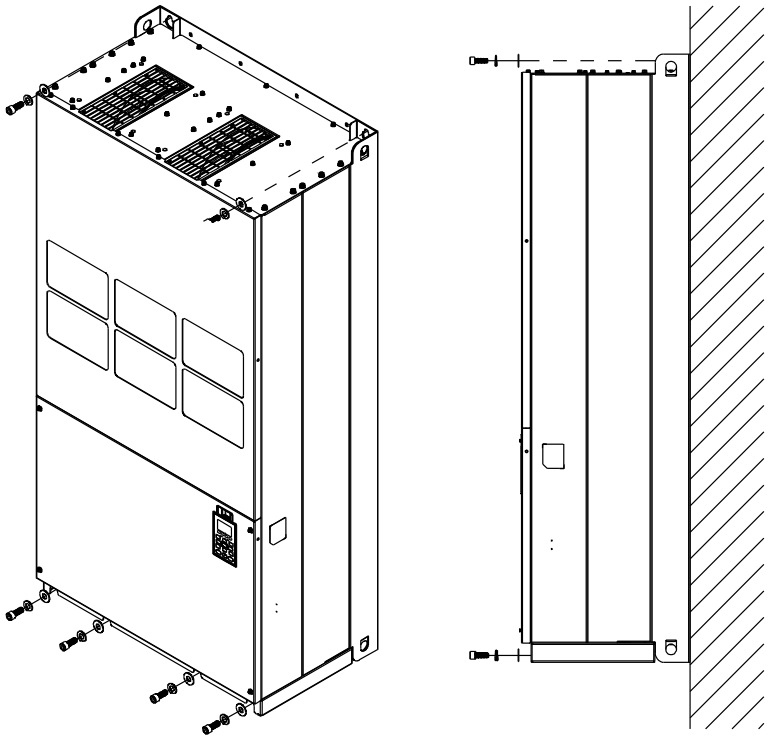

Figure 3-53

VFDXXXC43C-21

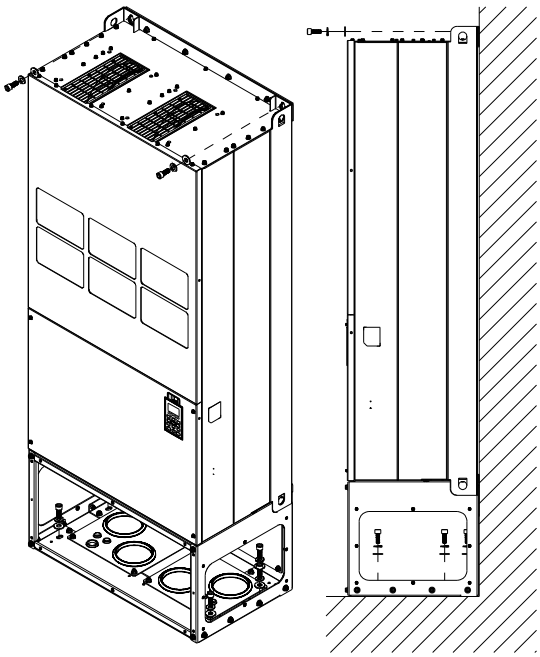

Fix the drive from the inside.

Screw: M12*8

Torque: 340–420 kg-cm / [295.1–364.6 lb-in.] / [33.3–41.2 Nm]

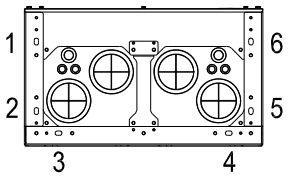

Figure 3-54

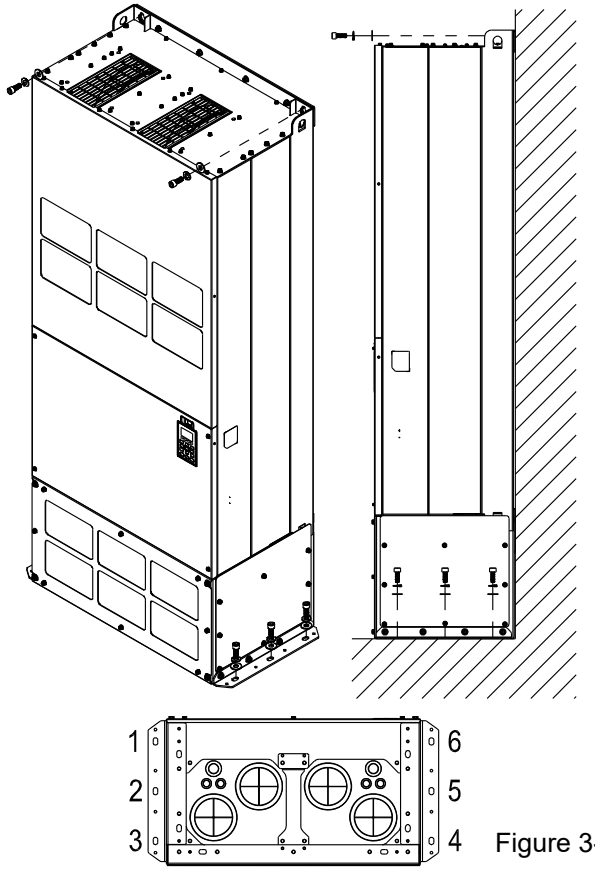

Figure 3-55

Fix the drive from the outside.

Screw: M12*8

Torque: 340–420 kg-cm / [295.1–364.6 lb-in.] / [33.3–41.2 Nm]

VFDXXXC63B

Screw M 12*6

Torque: 340–420 kg-cm / [295.1–364.6 lb-in.] / [33.32–41.16 Nm]

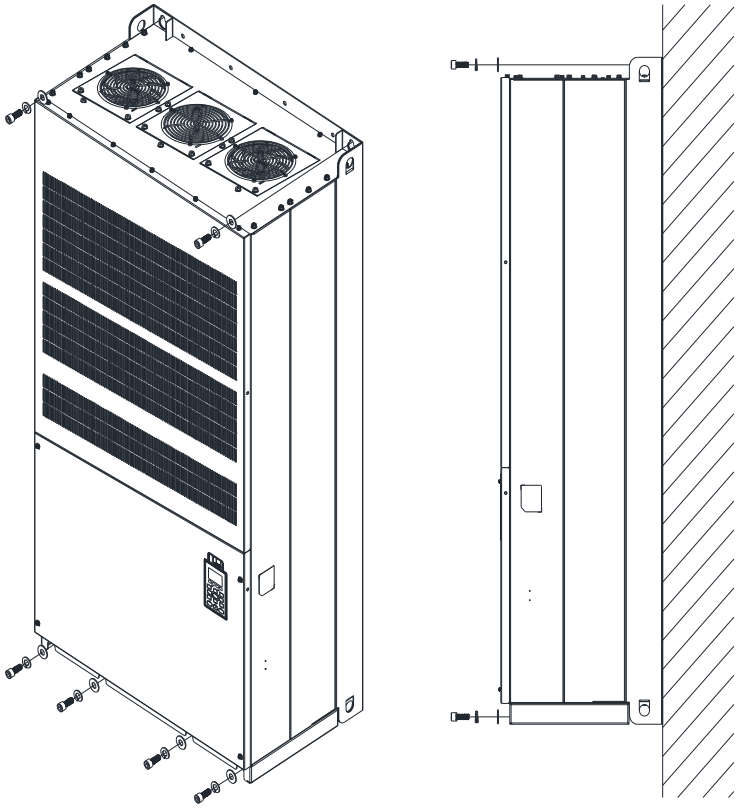

Figure 3-56

VFDXXXC63B-21

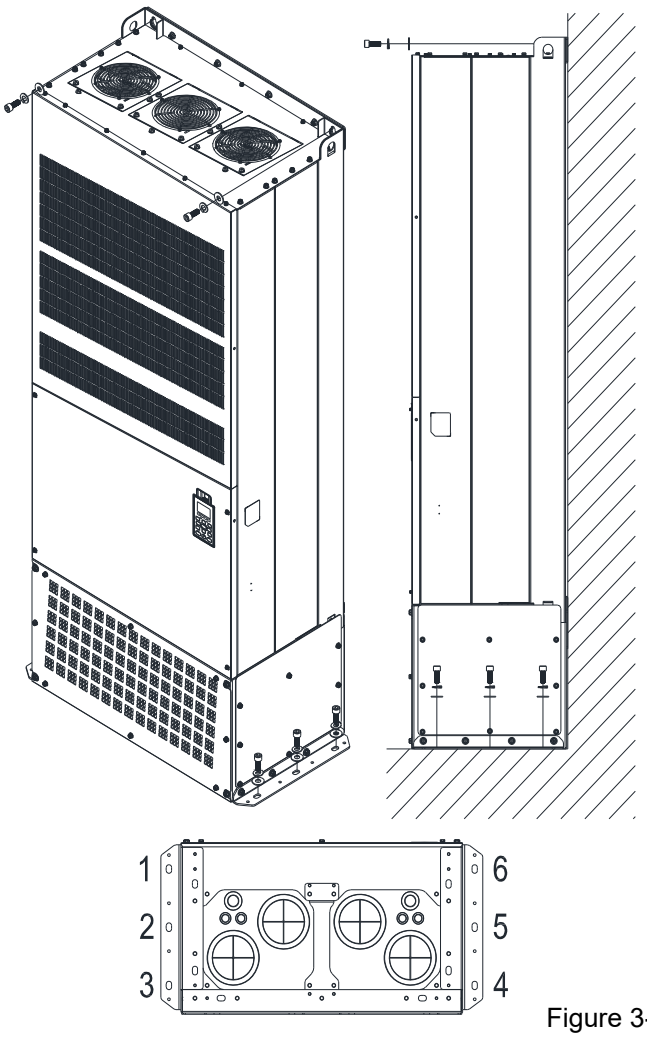

Fix the drive from the outside.
Screw: M12*8
Torque: 340–420 kg-cm / [295.1–364.6 lb-in.] / [33.32–41.16 Nm]

Figure 3-57

3-2 The Lifting Hook

The arrows indicate the location of the lifting holes of frame D to H, as shown in figure below:

Frame D0

Applicable models:

VFD370C43S-00; VFD370C43S-21; VFD450C43S-00; VFD450C43S-21

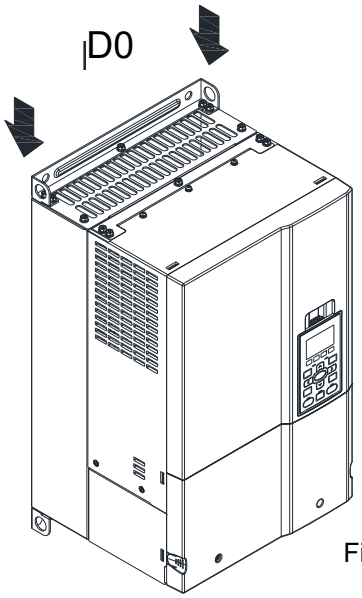

Figure 3-58

Frame D

Applicable models:

VFD300C23A-00; VFD300C23A-21; VFD370C23A-00; VFD370C23A-21; VFD450C63B-00; VFD450C63B-21; VFD550C43A-00; VFD550C43A-21; VFD550C63B-00; VFD550C63B-21; VFD750C43A-00; VFD750C43A-21

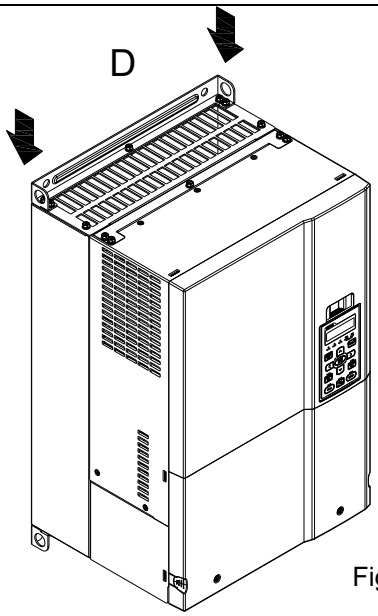

Figure 3-59

Frame E

Applicable models:

VFD450C23A-00; VFD450C23A-21; VFD550C23A-00; VFD550C23A-21; VFD750C23A-00; VFD750C23A-21; VFD750C63B-00; VFD750C63B-21; VFD900C43A-00; VFD900C43A-21; VFD900C63B-00; VFD900C63B-21; VFD1100C43A-00; VFD1100C43A-21; VFD1100C63B-00; VFD1100C63B-21; VFD1320C63B-00; VFD1320C63B-21

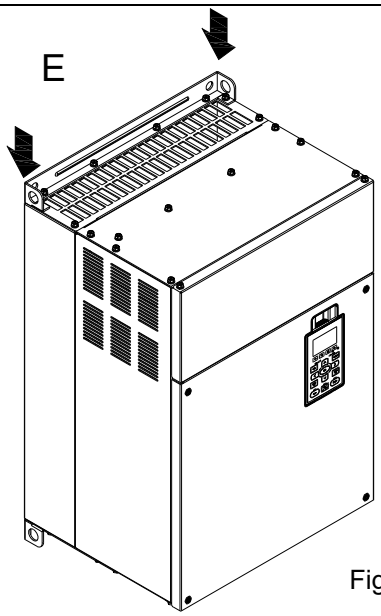

Figure 3-60

Frame F

Applicable models:

VFD900C23A-00; VFD900C23A-21; VFD1320C43A-00; VFD1320C43A-21; VFD1600C43A-00; VFD1600C43A-21; VFD1600C63B-00; VFD1600C63B-21; VFD2000C63B-00; VFD2000C63B-21

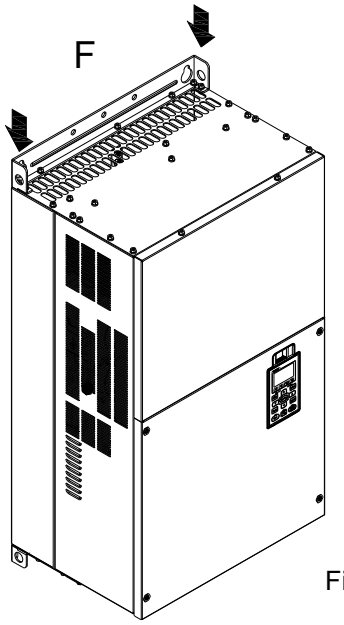

Figure 3-61

Frame G

Applicable models:

VFD1850C43A-00; VFD1850C43A-21; VFD2000C43A-00; VFD2000C43A-21; VFD2200C43A-00; VFD2200C43A-21; VFD2500C43A-00; VFD2500C43A-21; VFD2500C63B-00; VFD2500C63B-21; VFD3150C63B-00; VFD3150C63B-21

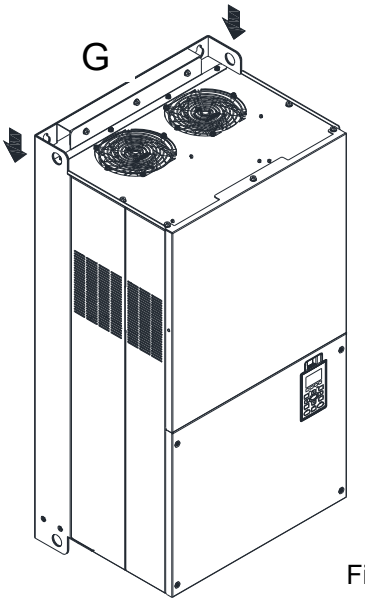

Figure 3-62

Frame H

Applicable models:

VFD2800C43A-00; VFD2800C43C-21; VFD3150C43A-00; VFD3150C43C-21; VFD3550C43A-00; VFD3550C43C-21; VFD4000C43A-00; VFD4000C43A-21; VFD4000C63B-00; VFD4500C43A-00; VFD4500C43C-21; VFD4500C63B-00; VFD5000C43A-00; VFD5000C43C-21; VFD5600C43A-00; VFD5600C43C-21; VFD5600C63B-00; VFD6300C63B-00

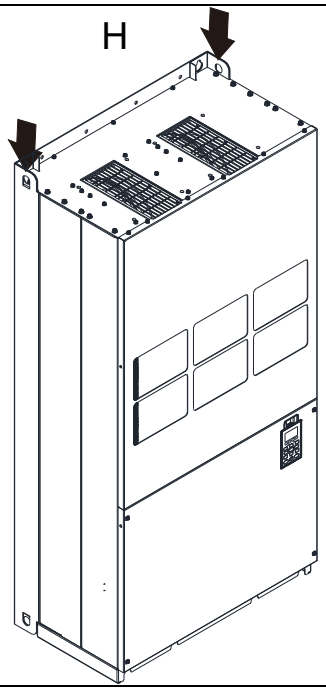

Figure 3-63

690V Frame H3

Applicable models:

VFD4000C63B-21; VFD4500C63B-21; VFD5600C63B-21; VFD6300C63B-21

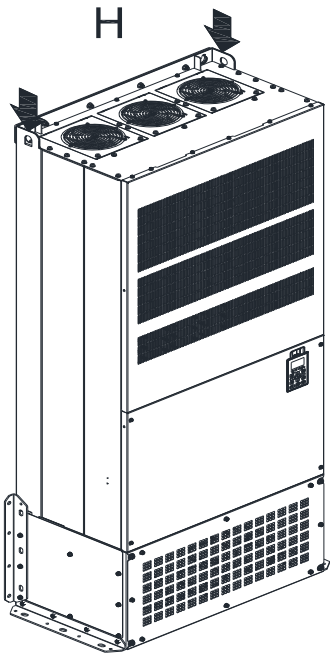

Figure 3-64

Ensure the lifting hook properly goes through the lifting hole, as shown in the following diagram.

Applicable to Frame D0–E

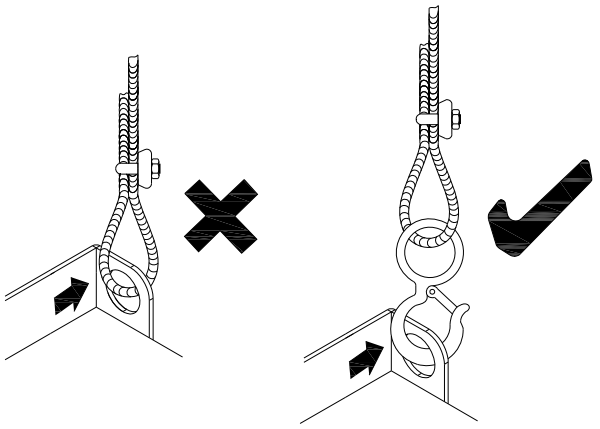

Figure 3-65

Applicable to Frame F–H

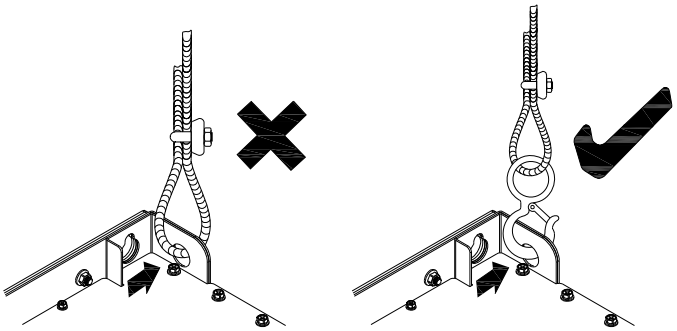

Figure 3-66

Ensure the angle between the lifting holes and the lifting device is within the specification, as shown in the following figure.

Applicable to Frame D0–E

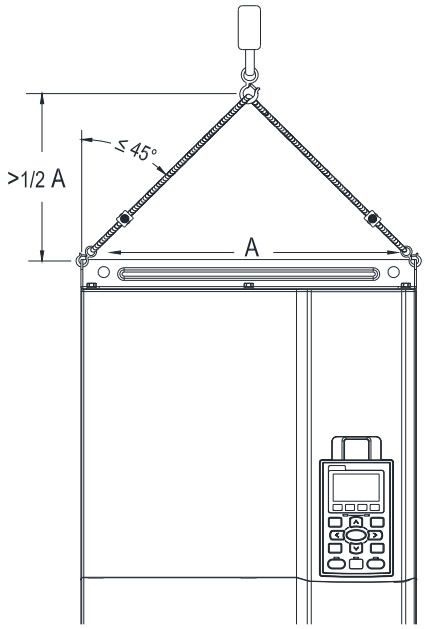

Figure 3-67

Applicable to Frame F–H, 690V Frame H3

Following drawing is only for demonstration, it may be slightly different with the machine you have.

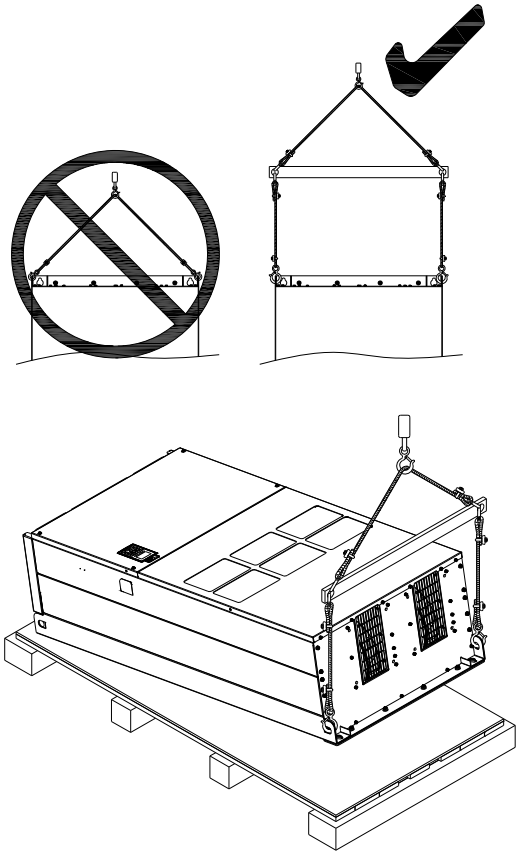

Figure 3-68

Weight

D0	VFDXXXXCXXS-00: 27 kg / [59.5 lbs] 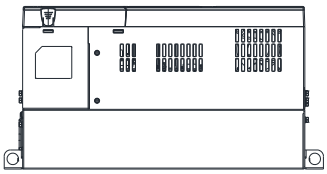 Figure 3-69	VFDXXXXCXXS-21: 29 kg / [63.9 lbs] 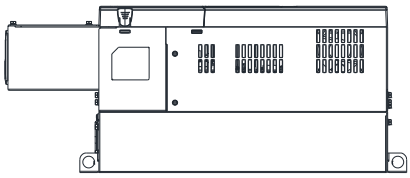 Figure 3-70
D	VFDXXXXCXXA-00: 37.6 kg / [82.9 lbs] VFDXXXC63B-00: 39.0 kg / [86.0 lbs] 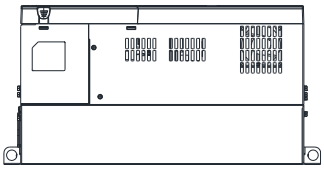 Figure 3-71	VFDXXXXCXXA-21: 40 kg / [88.2 lbs] VFDXXXC63B-21: 41.1 kg / [91.3 lbs] 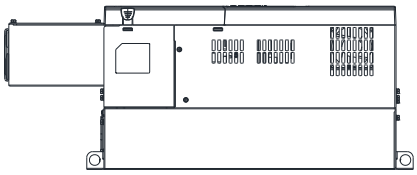 Figure 3-72
E	VFDXXXXCXXA-00: 63.6 kg / [140.2 lbs] VFDXXXC63B-00: 61.0 kg / [134.5 lbs] 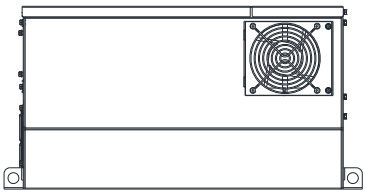 Figure 3-73	VFDXXXXCXXA-21: 66 kg / [145.5 lbs] VFDXXXC63B-21: 63.4 kg / [139.8 lbs] 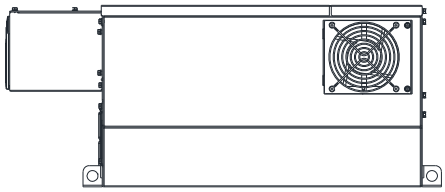 Figure 3-74
F	VFDXXXXCXXA-00: 85 kg / [187.2 lbs] VFDXXXC63B-00: 88.0 kg / [194.0 lbs] 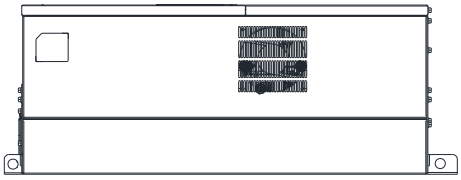 Figure 3-75	VFDXXXXCXXA-21: 88 kg / [193.8 lbs] VFDXXXC63B-21: 91.0 kg / [200.7 lbs] 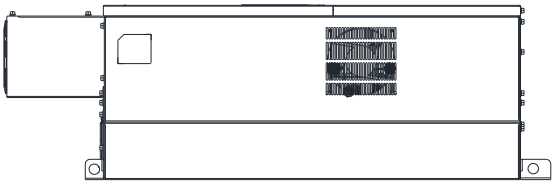 Figure 3-76
G	VFDXXXXCXXA-00: 130 kg / [286.5 lbs] VFDXXXC63B-00: 135.0 kg / [297.6 lbs] 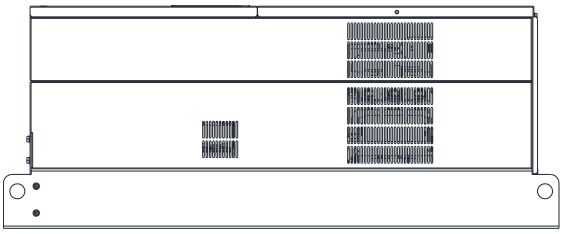 Figure 3-77	VFDXXXXCXXA-21: 138 kg / [303.9 lbs] VFDXXXC63B-21: 143.0 kg / [315.3 lbs] Figure 3-78

H1	VFD2800C43A-00; VFD3150C43A-00; VFD3550C43A-00; VFD4000C43A-00; VFD4500C43A-00: 244 kg / [537.9 lbs] VFD5000C43A-00; VFD5600C43A-00: 270 kg / [595.2 lbs] VFDXXXC63B-00: 243.0 kg / [535.7 lbs] 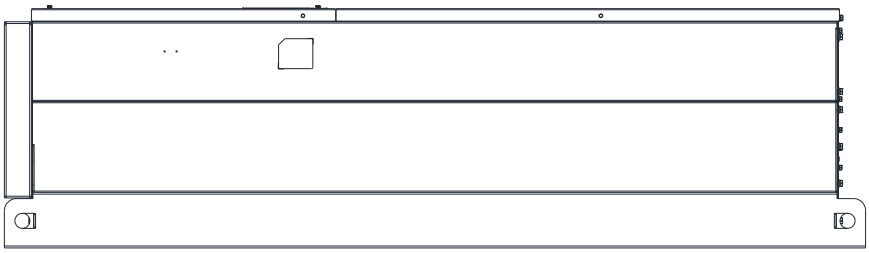 Figure 3-79
H2	VFDXXXC63B-21: 251.0 kg / [553.5 lbs] 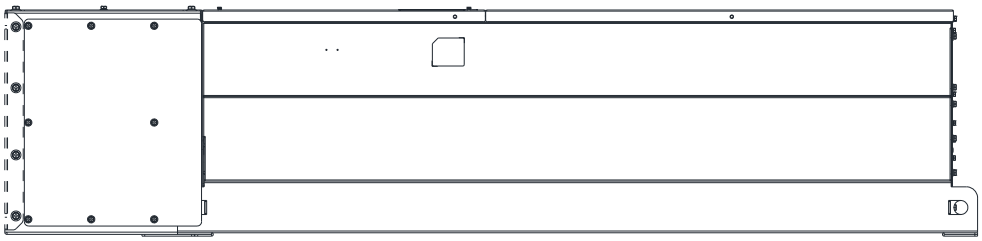 Figure 3-80
H3	VFD2800C43C-21; VFD3150C43C-21; VFD3550C43C-21; VFD4000C43C-21; VFD4500C43C-21: 269 kg / [593.0 lbs] VFD5000C43C-21; VFD5600C43C-21: 295kg / [650.4 lbs] 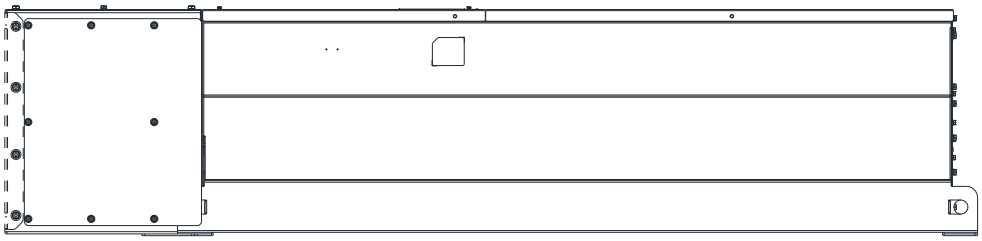 Figure 3-81

Chapter 4 Wiring

4-1 System Wiring Diagram

4-2 Wiring

After removing the front cover, verify that the power and control terminals are clearly noted. Read the following precautions before wiring.

DANGER	☑ **Turn off the AC motor drive power** before doing any wiring. A charge with hazardous voltages may remain in the DC bus capacitors even after the power has been turned off for a short time. Measure the remaining voltage with a DC voltmeter on +1/DC+ and DC- before doing any wiring. For your safety, do not start wiring before the voltage drops to a safe level (less than 25 V_{DC}). Installing wiring with a residual voltage may cause personal injury, sparks and short circuit. ☑ Only qualified personnel familiar with AC motor drives are allowed to perform installation, wiring and commissioning. Make sure the power is turned off before wiring to prevent electric shock. ☑ Make sure that power is only applied to the R/L1, S/L2 and T/L3 terminals. Failure to comply may result in damage to the equipment. The voltage and current must be in the range indicated on the nameplate (refer to Section 1-1 Nameplate Information for details). ☑ All units must be grounded directly to a common ground terminal to prevent damage from a lightning strike or electric shock and reduce noise interference. ☑ Tighten the screws of the main circuit terminals to prevent sparks caused by screws loosened due to vibration.
CAUTION	☑ For your safety, choose wires that comply with local regulations when wiring. ☑ Check the following items after finishing the wiring: 1. Are all connections correct? 2. Are there any loose wires? 3. Are there any short circuits between the terminals or to ground?

4-1 System Wiring Diagram

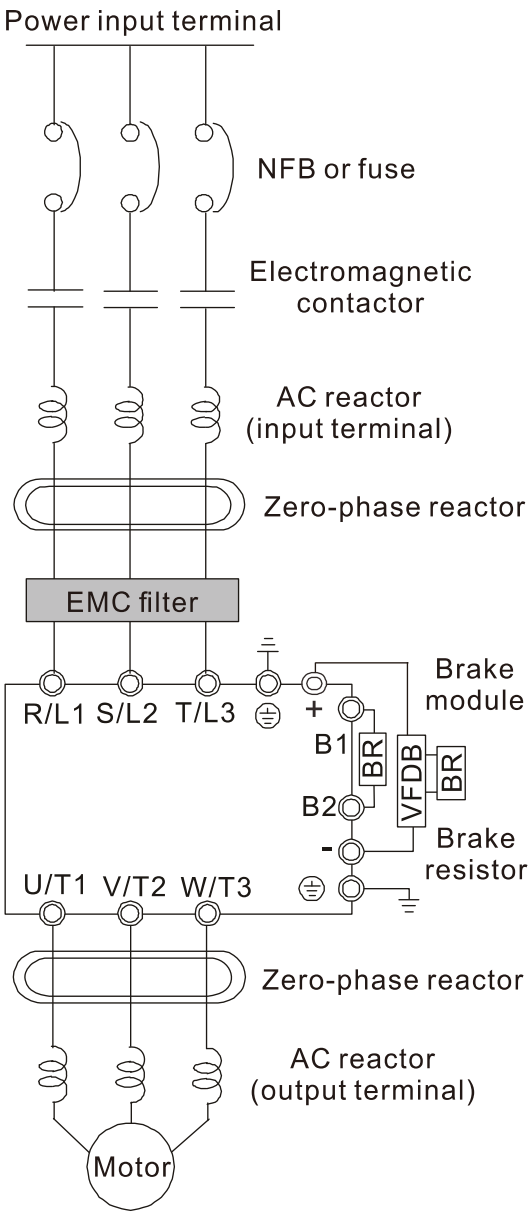

Figure 4-1

Note: Please refer to Section 4-2 Wiring Diagram for detailed wiring information.

Power input terminal	Supply power according to the rated power specifications indicated in the manual (refer to Chapter 9 Specification).
NFB or fuse	There may be a large inrush current during power on. Refer to Section 7-2 NFB to select a suitable NFB or Section 7-3 Fuse Specification Chart.
Electromagnetic contactor	Switching the power ON/OFF on the primary side of the electromagnetic contactor can turn the drive ON/OFF, but frequent switching can cause machine failure. Do not switch ON/OFF more than once an hour. Do not use the electromagnetic contactor as the power switch for the drive; doing so shortens the life of the drive. Refer to Section 7-2 Magnetic Contactor / Air Circuit Breaker to select the electromagnetic contactor that meets your requirement.
AC reactor (input terminal)	When the mains power supply capacity is greater than 500 kVA, or when it switches into the phase capacitor, the instantaneous peak voltage and current generated may destroy the internal circuit of the drive. It is recommended that you install an input side AC reactor in the drive. This also improves the power factor and reduces power harmonics. The wiring distance should be within 10 m. Refer to Section 7-4 AC / DC Reactor for details. Refer to Chapter 7-4.
Zero phase reactor	Used to reduce radiated interference, especially in environments with audio devices, and reduce input and output side interference. The effective range is AM band to 10 MHz. Refer to Section 7-5 Zero Phase Reactors for details.
EMC filter	Can be used to reduce electromagnetic interference. Refer to Section 7-6 EMC Filter for details.
Brake module & Brake resistor (BR)	Used to shorten the deceleration time of the motor. Refer to Section 7-1 Brake Resistors and Brake Units Used in AC Motor Drives for details.
AC reactor (output terminal)	The motor cable length affects the size of the reflected wave on the motor end. It is recommended that you install an AC output reactor when the motor wiring length exceeds the value listed in Section 7-4.

Table 4-1

4-2 Wiring

4-2-1 Wiring

Wiring Diagram for Frame A–C

Input: 3-phase power

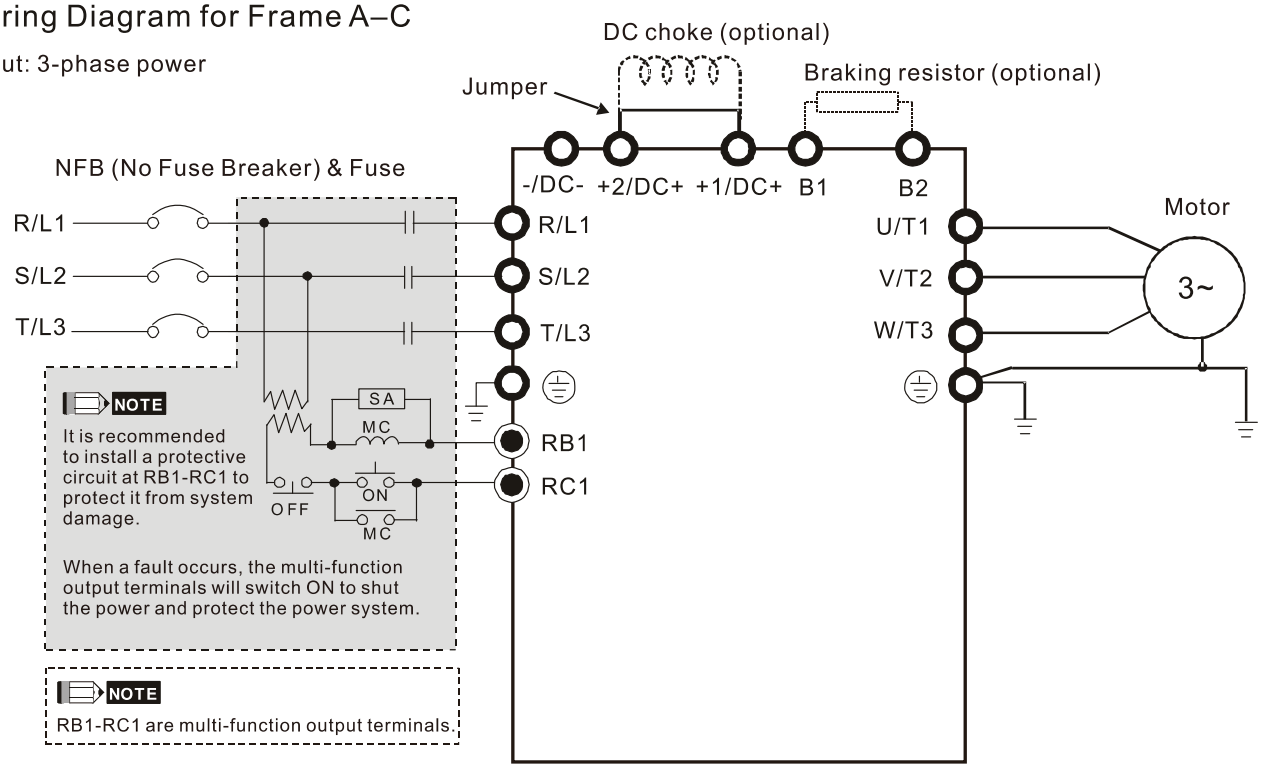

Figure 4-2

Wiring Diagram for Frame D–F

Input: 3-phase power

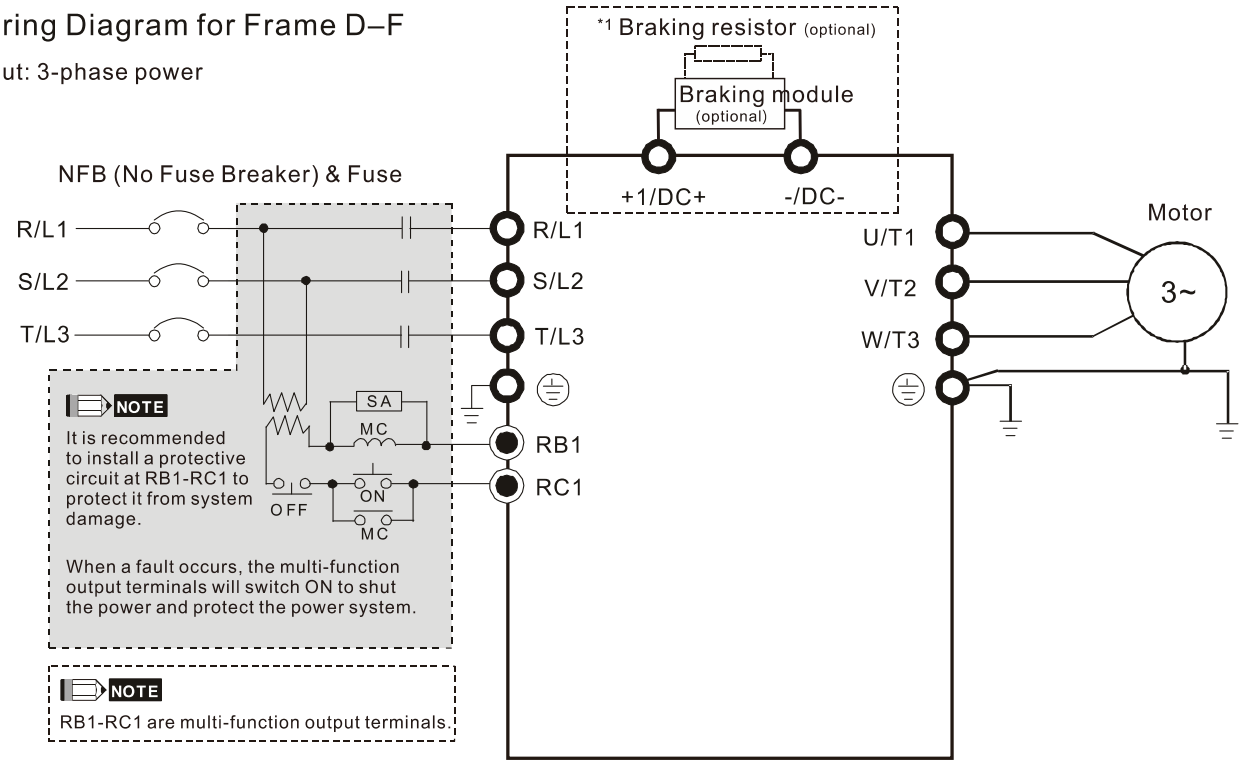

Figure 4-3

*1 Refer to Section 7-1 for brake units and resistors selection

Wiring Diagram for Frame G–H

Input: 12-pulse rectifier

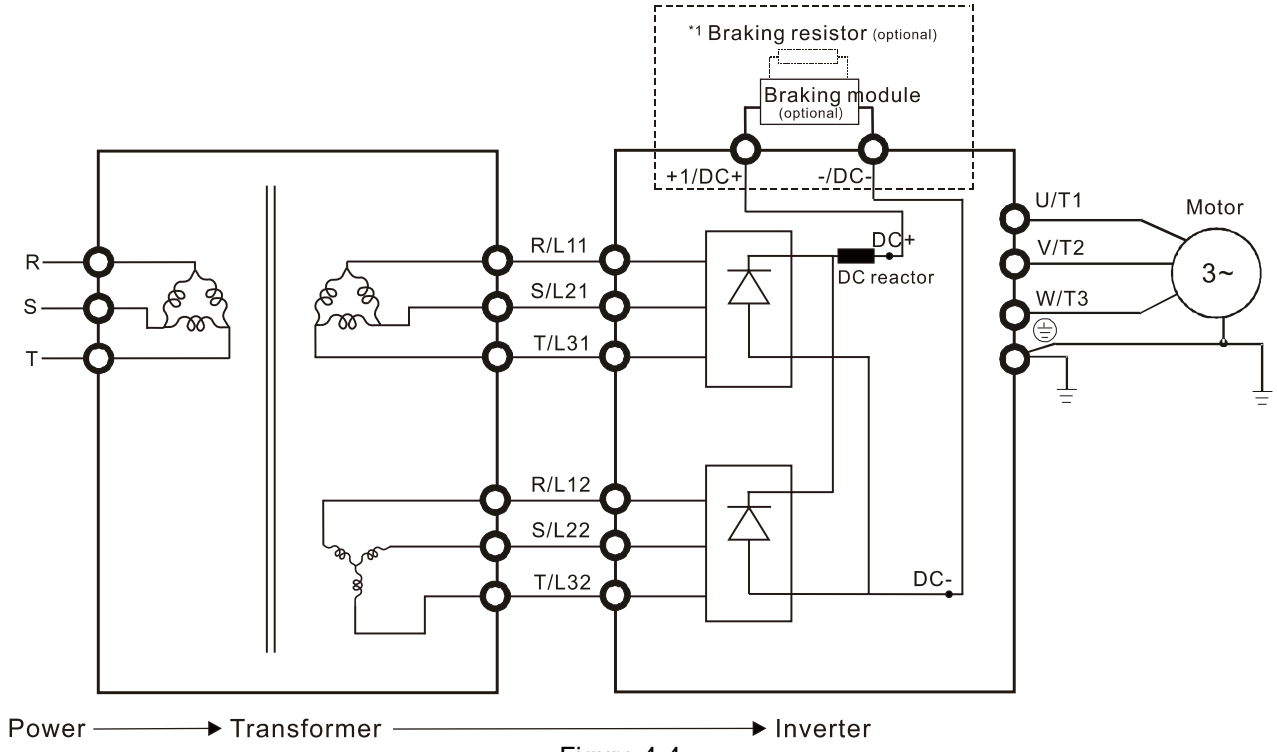

Figure 4-4

*1 Refer to Section 7-1 for brake units and resistors selection.
Note: When wiring for 12 Pulse Input, strictly follow above wiring diagram

Wiring Diagram for Frame A–H

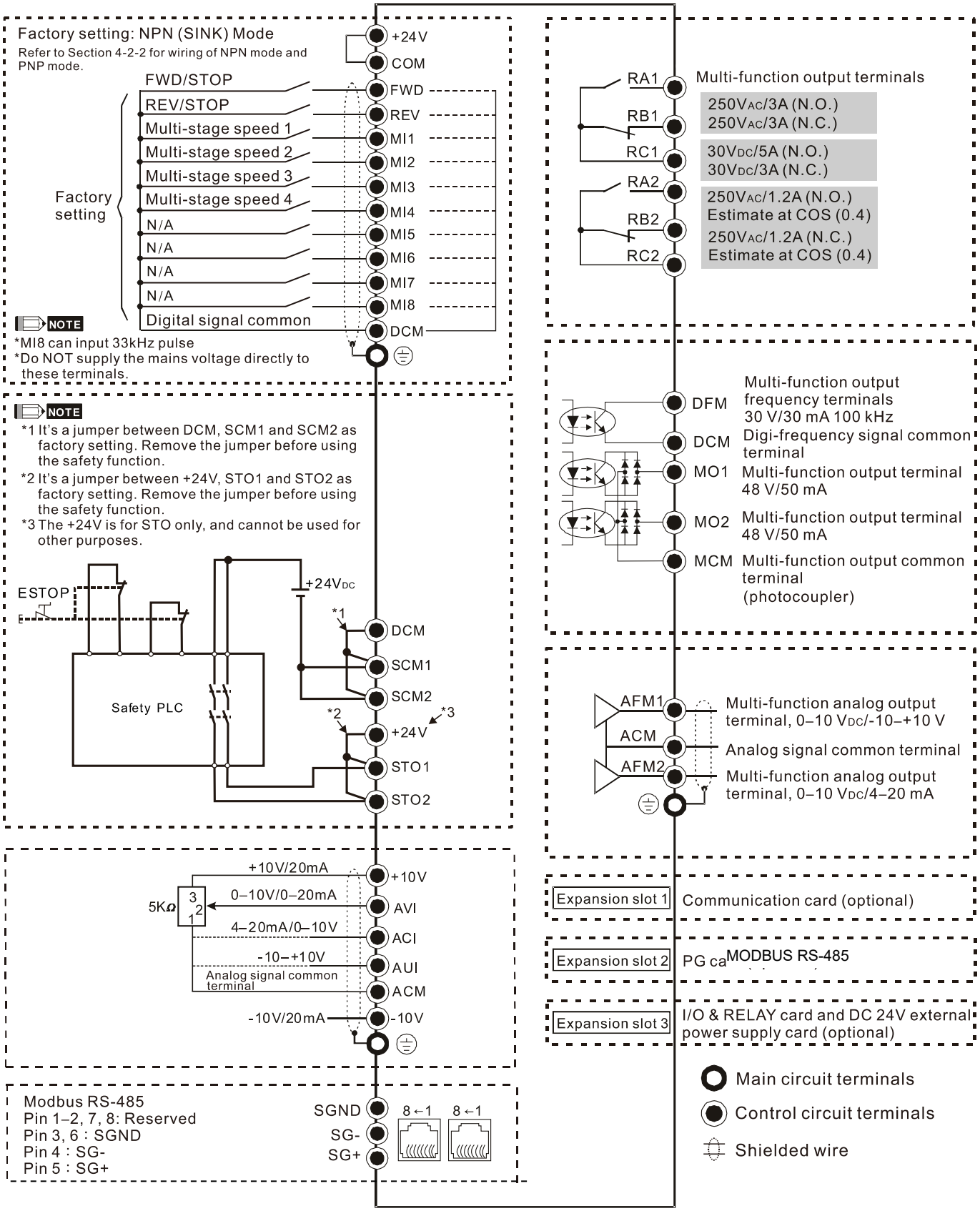

Figure 4-5

4-2-2 SINK (NPN) / SOURCE (PNP) Mode

① Sink Mode
with internal power (+24VDC)

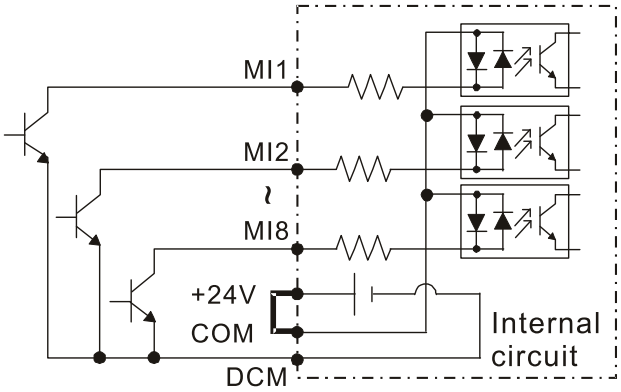

Figure 4-6

② Source Mode
with internal power (+24VDC)

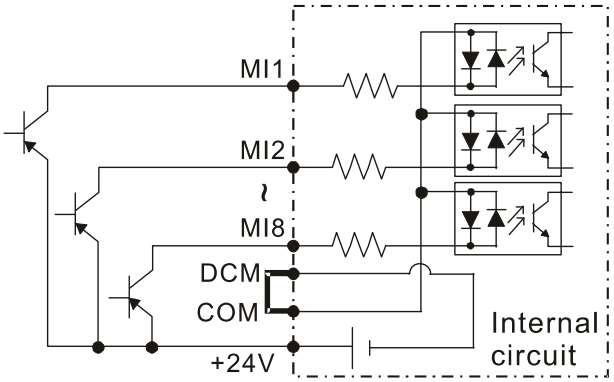

Figure 4-7

③ Sink Mode
with external power

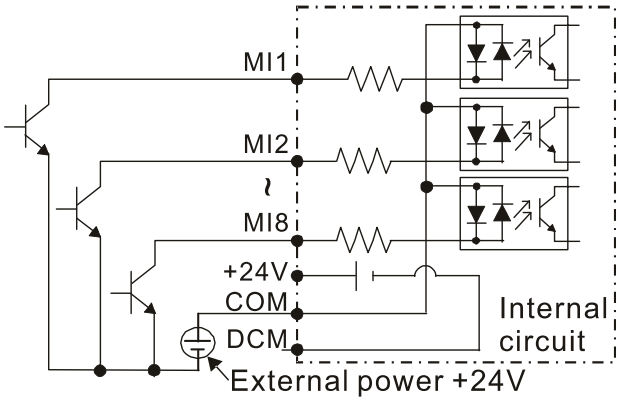

Figure 4-8

④ Source Mode
with external power

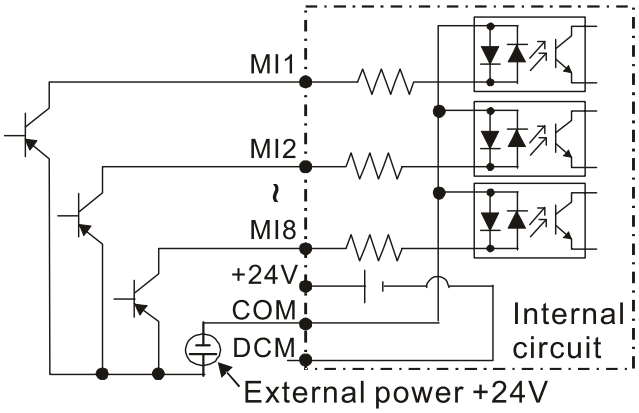

Figure 4-9

[This page intentionally left blank]

Chapter 5 Main Circuit Terminals

5-1 Main Circuit Diagram

5-2 Main Circuit Terminal Specifications

DANGER

- ☑ Tighten the screws in the main circuit terminal to prevent sparks caused by screws loosened due to vibration.
- ☑ If necessary, use an inductive filter only at the motor output terminals U/T1, V/T2, W/T3 of the AC motor drive. DO NOT use phase-compensation capacitors or L-C (Inductance-Capacitance) or R-C (Resistance-Capacitance), unless approved by Delta.
- ☑ DO NOT connect phase-compensation capacitors or surge absorbers at the output terminals of AC motor drives.
- ☑ DO NOT short circuit [+1, -], [+2, -], [+1/DC+, -/DC-] or connect brake resistors directly to any of them to prevent damage to the drive or to the brake resistors.
- ☑ Ensure proper insulation of the main circuit wiring in accordance with the relevant safety regulations.

CAUTION

Main input power terminals

- ☑ Do not connect three-phase model to single-phase power. R/L1, S/L2 and T/L3 have no phase-sequence requirement; they can be connected in any sequence.
- ☑ Add a magnetic contactor (MC) to the power input wiring to cut off power quickly and reduce malfunctions when the AC motor drive protection function activates. Both ends of the MC should have an R-C surge absorber.
- ☑ Use voltage and current within the specifications in Chapter 09. Refer to Chapter 09 Specifications for details.
- ☑ When using a general GFCI (Ground Fault Circuit Interrupter), select a current sensor with sensitivity of 200 mA or above and not less than 0.1-second operation time to avoid nuisance tripping.
- ☑ Use shielded wire or conduit for the power wiring and ground the two ends of the shield wire or conduit.
- ☑ DO NOT run and stop the AC motor drives by turning the power ON and OFF. Run and stop the AC motor drives by sending RUN and STOP commands through the control terminals or the keypad. If you still need to run and stop the AC motor drives by turning the power ON and OFF, do so no more often than ONCE per hour.
- ☑ To comply with UL standards, connect the drive to a three-phase three-wire or three-phase four-wire Wye system type of mains power system.

Output terminals of the main circuit

- ☑ Use well-insulated motor, suitable for inverter operation.
- ☑ When the AC drive output terminals U/T1, V/T2, and W/T3 are connected to the motor terminals U/T1, V/T2, and W/T3 respectively, the motor will rotate counterclockwise (as viewed on the shaft end of the motor, refer to the pointed direction in the figure below) upon a forward operation command is received. To permanently reverse the direction of motor rotation, switch over any of the two motor leads.

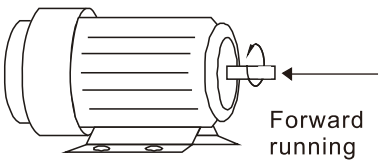

Figure 5-1

Terminals for connecting DC reactor, external brake resistor and DC circuit

☑ Use the terminals, as shown in Figure 5-2, to connect a DC reactor to improve the power factor and reduce harmonics. A jumper is connected to these terminals at the factory. Remove that jumper before connecting to a DC reactor.

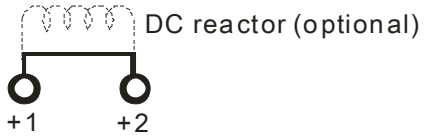

Figure 5-2

☑ Install an external brake resistor for applications in frequent deceleration to stop, short deceleration time (such as high frequency operation and heavy load operation), too low braking torque, or increased braking torque.

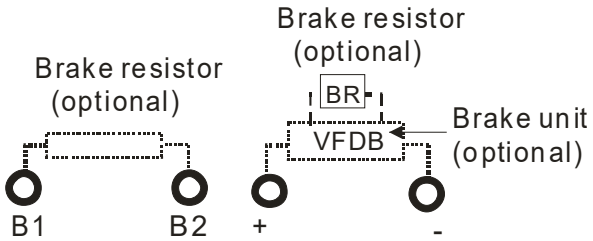

Figure 5-3

☑ The external brake resistor of Frame A, B and C should connect to the terminals (B1, B2) of AC motor drives.

☑ For those models without built-in brake resistor, please connect external brake unit and brake resistor (both of them are optional) to increase brake torque.

☑ When the terminals +1, +2 and - are not used, leave the terminals open.

☑ DC+ and DC- are connected by common DC bus, refer to Section 5-1 (Main Circuit Terminal) for the wiring terminal specification and the wire gauge information.

☑ Refer to the VFDB manual for more information on wire gauge when installing the brake unit.

5-1 Main Circuit Diagram

Wiring Diagram for Frame A~C

Input: 3-phase power

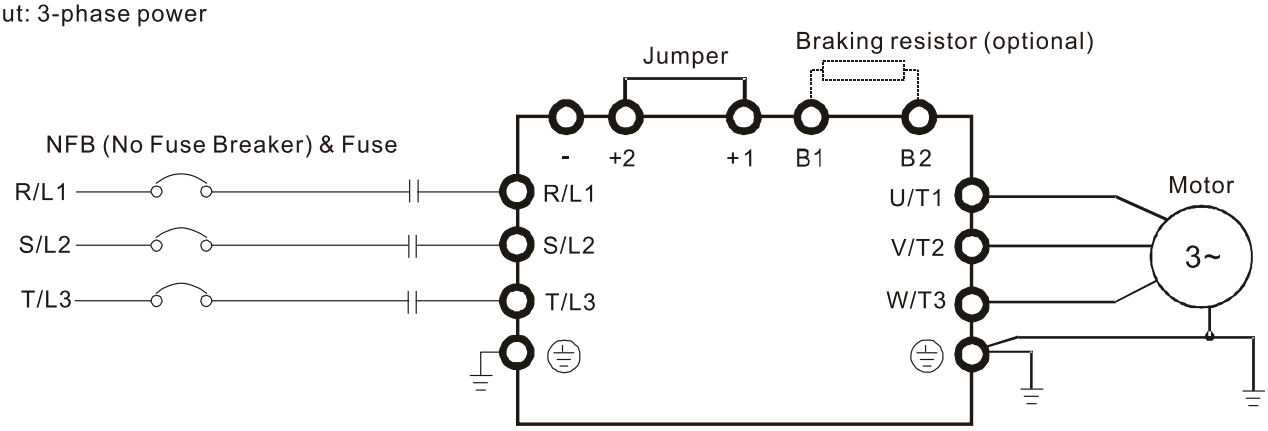

Figure 5-4

Wiring Diagram for Frame A~C

Input: 3-phase power

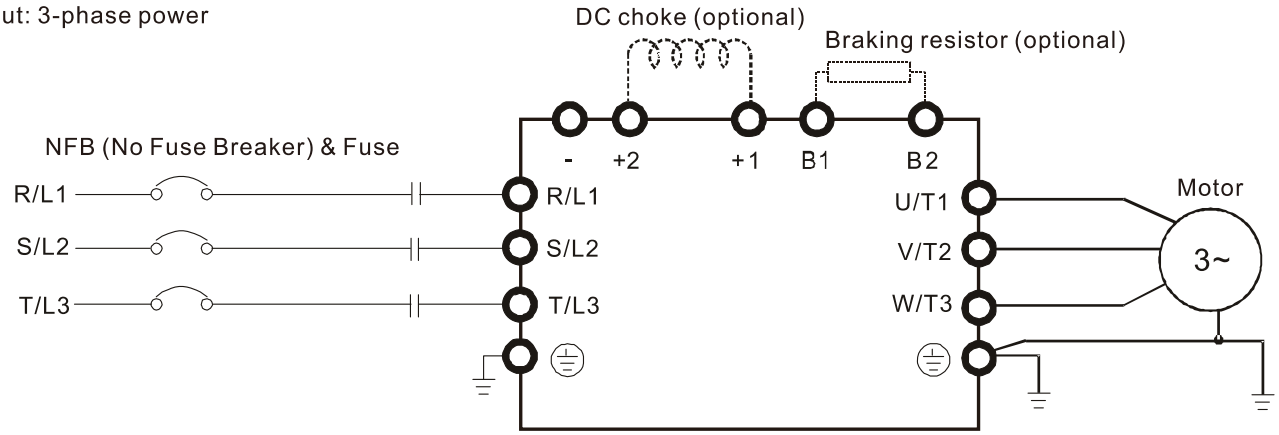

Figure 5-5

Wiring Diagram for Frame D~F

Input: 3-phase power

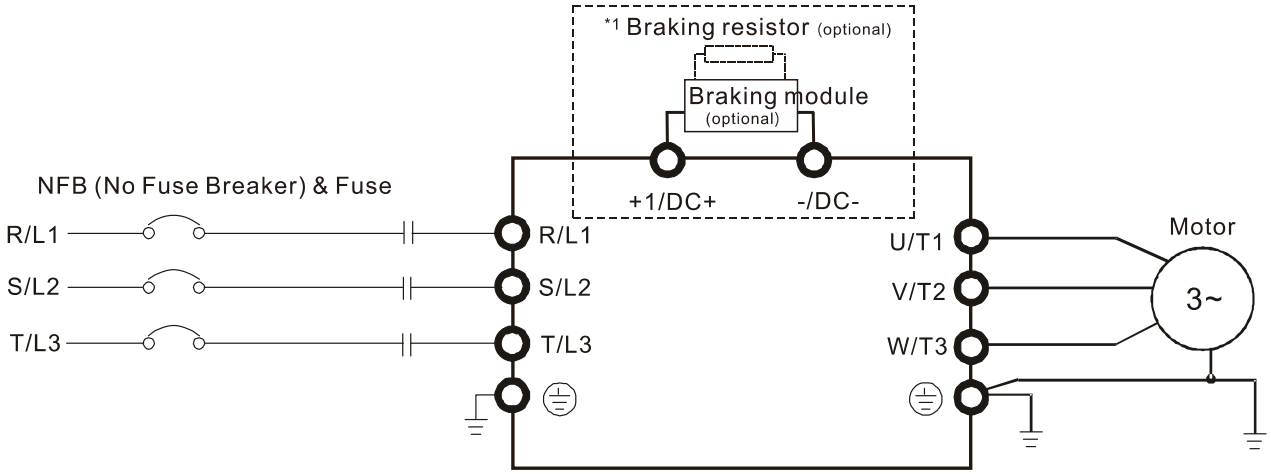

Figure 5-6

*1 Refer to Section 7-1 for more details of brake units.

Wiring Diagram for Frame G~H

Input: 3-phase power

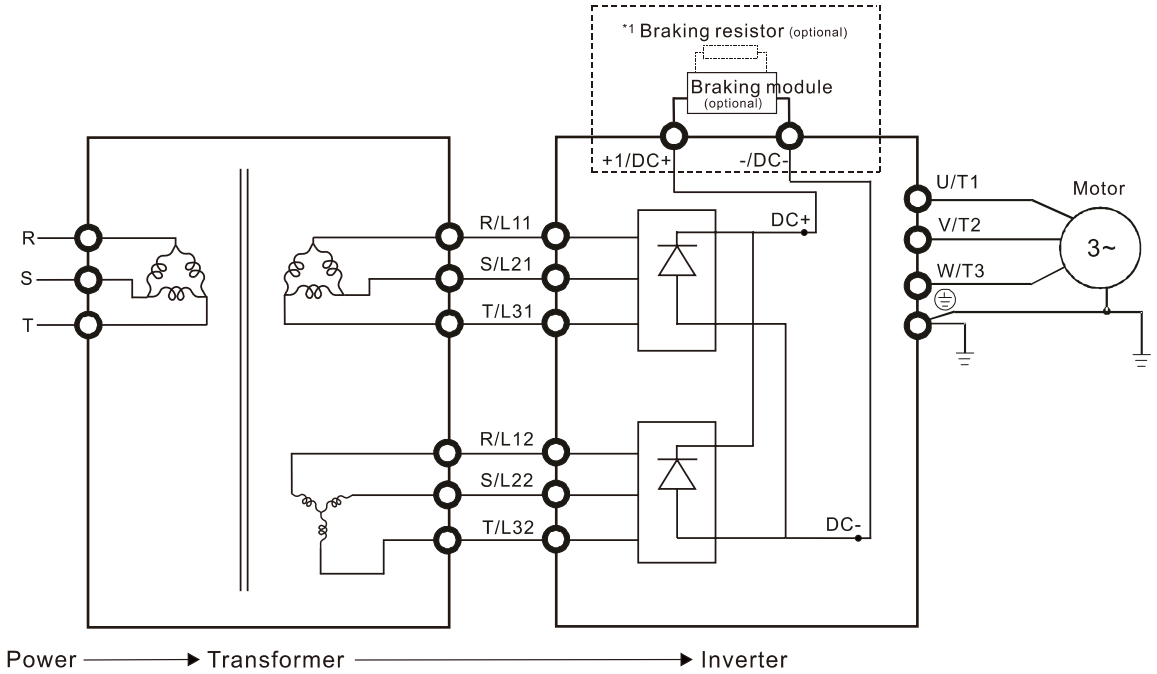

Figure 5-7

*1 Refer to Section 7-1 for brake units and resistors selection.
Note: When wiring for 12 pulse input, you should strictly follow the wiring diagram above.

NOTE

- If the wiring between motor drive and motor is over 75 meters, refer to Section 7-4 Specifications of limits for motor cable length.
- Frame G and H models use 12 pulse input, you should remove the short circuit plate (see the figure below). Consult with Delta before using 12 pulse input.

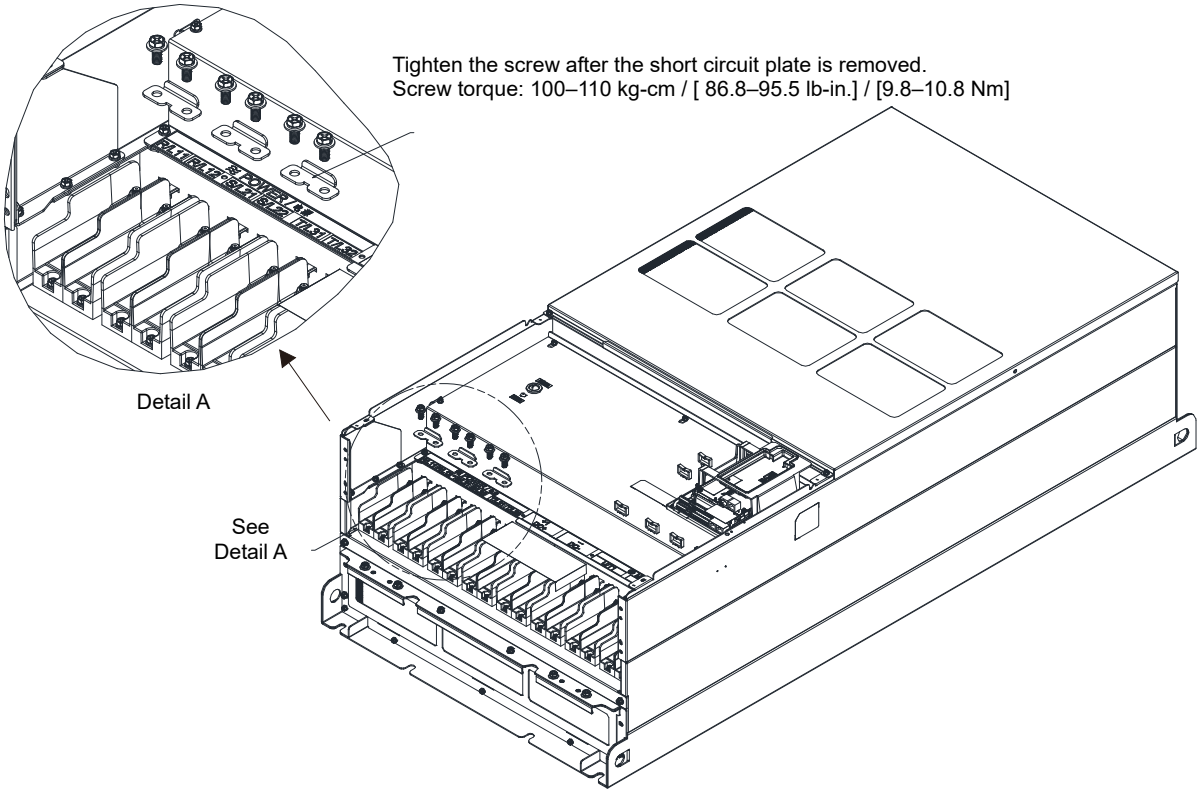

Figure 5-8

Terminals	Descriptions
R/L1, S/L2, T/L3	Mains input terminals (three-phase)
U/T1, V/T2, W/T3	AC motor drive output terminals for connecting three-phase induction motor
+1/DC+, +2/DC+	Applicable to frame A–C Connections for DC reactor to improve the power factor. Remove the jumper before installing a DC reactor.
+1/DC+, -/DC-	Connections for brake module (VFDB series) (for 230V models: ≤ 22 kW, built-in brake module) (for 460V models: ≤ 30 kW, built-in brake module) (for 690V models: ≤ 37 kW, built-in brake module) Common DC bus
B1, B2	Connections for brake resistor (optional). Refer to Section 7-1 for details.
⏚	Ground connection; comply with local regulations.

Table 5-1

5-2 Main Circuit Terminal Specifications

- Use the specified ring lug for main circuit terminal wiring. See figure 5-9 and figure 5-10 for ring lug specifications. For other types of wiring, use the wires that comply with the local regulations.
- After crimping the wire to the ring lug (must be UL approved), UL and CSA approved recognized component (YDPU2), install heat shrink tube rated at a minimum of 600V_{AC} insulation over the live part. Refer to figure 5-10 below.

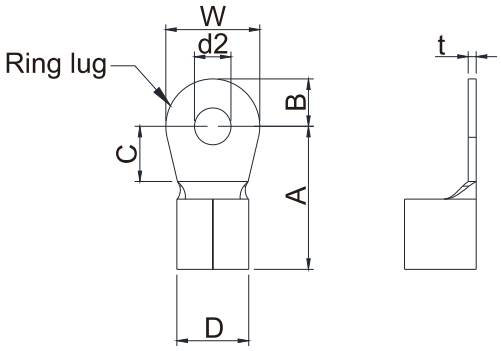

Figure 5-9

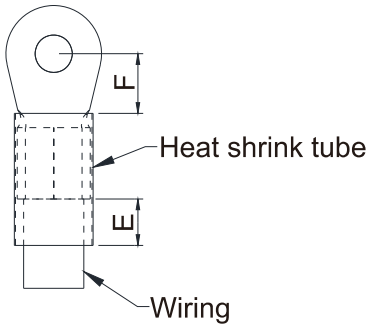

Figure 5-10

Terminal specification

The part number of the ring lugs (produced by K.S. Terminals Inc.) in the table below are for reference only. You can buy the ring lugs of your choice to match with different frame sizes.

Unit: mm

Frame	AWG*1	Kit P/N	A (MAX)	B (MAX)	C (MIN)	D (MAX)	d2 (MIN)	E (MIN)	F (MIN)	W (MAX)	t (MAX)
A	16	RNBL2-4	20.0	5.0	5.5	9.0	4.3	8.0	5.5	10.0	1.5
	14	RNBL2-4									
	12	RNBL5-4									
	10	RNBL5-4									
	8	RNBS8-4									
B	8	RNBM8-5	28.0	7.0	7.5	14.0	5.2	13.0	12.0	14.0	1.5
	6	RNB14-5									
	4	RNBS22-5									
C	6	RNB14-8	40.0	12.0	12.5	22.0	8.3	13.0	12.5	24.0	2.5
	4	RNB22-8									
	2	RNBS38-8									
	1/0	RNB60-8									
D0	4	RNB22-8	44.0	13.0	10.0	15.0	8.3	13.0	17.0	26.0	3.0
	2	RNBS38-8									
	1/0	SQNBS60-8	40.0	11.0	10.0	23.0	8.3	13.0	14.0*2	24.0	4.5
	2/0	SQNBS80-8									
D	4	RNB22-8	50.0	16.0	10.0	27.0	8.3	13.0	14.0	28.0	6.0
	2	RNBS38-8									
	1/0	RNB60-8									
	2/0	RNB70-8									
	3/0	RNB80-8									
	4/0	SQNBS100-8									
	250MCM	SQNBS150-8									
	300MCM	SQNBS150-8									

Frame	AWG*1	Kit P/N	A (MAX)	B (MAX)	C (MIN)	D (MAX)	d2 (MIN)	E (MIN)	F (MIN)	W (MAX)	t (MAX)
E	1/0	RNB60-8	53.0	16.0	17.0	26.5	8.4	13.0	17.0	31.0	5.0
	2/0	RNB70-8									
	3/0	RNB80-8									
	4/0	RNB100-8									
F	3/0	RNB80-8	55.0	15.0	10.0	27.0	8.3	13.0	17.5	31.0	6.0
	4/0	SQNBS100-8									
	300MCM	SQNBS150-8									
G	1/0	SQNBS60-8	54.0	15.5	18.0	26.5	8.2	13.0	18.0	31.0	3.5
	2/0	SQNBS80-8									
	3/0	SQNBS80-8									
	4/0	SQNBS100-8									
	250MCM	SQNBS150-8									
	300MCM	SQNBS180-12	70.0	21.0	27.0	32.7	12.2	13.0	27.0	42.0	4.0
	350MCM	SQNBS180-12									
	400MCM	SQNBS200-12									
	500MCM	SQNBS200-12									
H	3/0	SQNBS80-8	54.0	15.5	18.0	26.5	8.2	13.0	18.0	31.0	3.5
	4/0	SQNBS100-8									
	250MCM	SQNBS150-8									
	300MCM	SQNBS150-8									
	350MCM	SQNBS150-8									
	400MCM	SQNBS200-12	70.0	21.0	27.0	32.7	12.2	13.0	27.0	42.0	4.0
	500MCM	SQNBS200-12									

Table 5-2

*1. AWG: Refer to the following tables for the wire size specification for models in each frame.
*2: F(MAX)=16.5

Frame A

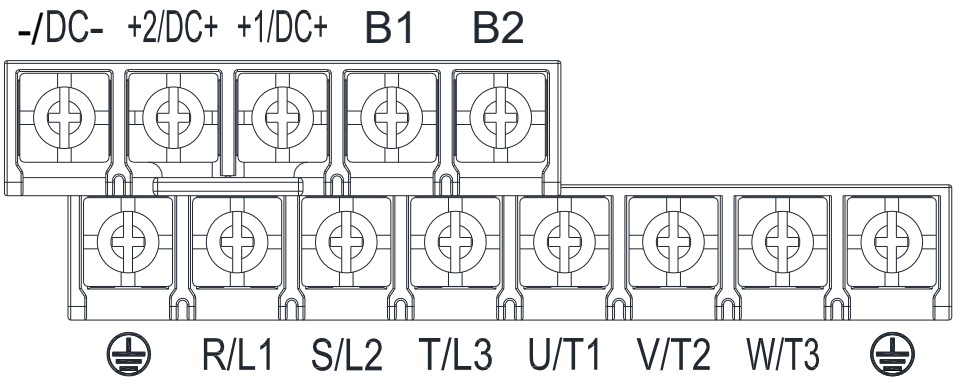

- If you install at Ta 50°C environment, use copper wires that have a voltage rating of 600V and are temperature resistance to 75°C or 90°C.
- If you install at Ta 50°C above environment, use copper wires that have a voltage rating of 600V and are temperature resistance to 90°C or above.
- To be UL installation compliant, you must use copper wires when installing. The wire gauge is based on temperature resistance of 75°C, in accordance with UL requirements and recommendations. Do not reduce the wire gauge when using high-temperature resistant wire.

Model Name	Main Circuit Terminals R/L1、S/L2、T/L3、U/T1、V/T2、W/T3、-/DC-、+1/DC+、+2/DC+、B1、B2			Terminal ⏚		
	Max. Wire Gauge	Min. Wire Gauge	Screw Spec. and Torque (±10%)	Max. Wire Gauge	Min. Wire Gauge	Screw Spec. and Torque (±10%)
VFD007C23A-21	10 mm² [8 AWG]	2.5 mm² [14 AWG]	M4 20 kg-cm [17.4 lb-in.] [1.96 Nm]	2.5 mm² [14 AWG]	2.5 mm² [14 AWG]	M4 20 kg-cm [17.4 lb-in.] [1.96 Nm]
VFD015C23A-21		4.0 mm² [12 AWG]		4.0 mm² [12 AWG]	4.0 mm² [12 AWG]	
VFD022C23A-21		6.0 mm² [10 AWG]		6.0 mm² [10 AWG]	6.0 mm² [10 AWG]	
VFD037C23A-21		10.0 mm² [8 AWG]		10.0 mm² [8 AWG]	10.0 mm² [8 AWG]	
VFD007C43A-21		1.5 mm² [16 AWG]		2.5 mm² [14 AWG]	2.5 mm² [14 AWG]	
VFD015C43A-21		1.5 mm² [16 AWG]		2.5 mm² [14 AWG]	2.5 mm² [14 AWG]	
VFD022C43A-21		2.5 mm² [14 AWG]		2.5 mm² [14 AWG]	2.5 mm² [14 AWG]	
VFD037C43A-21		6.0 mm² [10 AWG]		6.0 mm² [10 AWG]	6.0 mm² [10 AWG]	
VFD040C43A-21		6.0 mm² [10 AWG]		6.0 mm² [10 AWG]	6.0 mm² [10 AWG]	
VFD055C43A-21		6.0 mm² [10 AWG]		6.0 mm² [10 AWG]	6.0 mm² [10 AWG]	
VFD007C4EA-21		1.5 mm² [16 AWG]		2.5 mm² [14 AWG]	2.5 mm² [14 AWG]	
VFD015C4 EA-21		1.5 mm² [16 AWG]		2.5 mm² [14 AWG]	2.5 mm² [14 AWG]	
VFD022C4 EA-21		2.5 mm² [14 AWG]		2.5 mm² [14 AWG]	2.5 mm² [14 AWG]	
VFD037C4 EA-21		6.0 mm² [10 AWG]		6.0 mm² [10 AWG]	6.0 mm² [10 AWG]	
VFD040C4 EA-21		6.0 mm² [10 AWG]		6.0 mm² [10 AWG]	6.0 mm² [10 AWG]	
VFD055C4 EA-21		6.0 mm² [10 AWG]		6.0 mm² [10 AWG]	6.0 mm² [10 AWG]	
VFD015C53A-21		2.5 mm² [14 AWG]		2.5 mm² [14 AWG]	2.5 mm² [14 AWG]	
VFD022C53A-21		2.5 mm² [14 AWG]		2.5 mm² [14 AWG]	2.5 mm² [14 AWG]	
VFD037C53A-21		4.0 mm² [12 AWG]		4.0 mm² [12 AWG]	4.0 mm² [12 AWG]	

Frame B

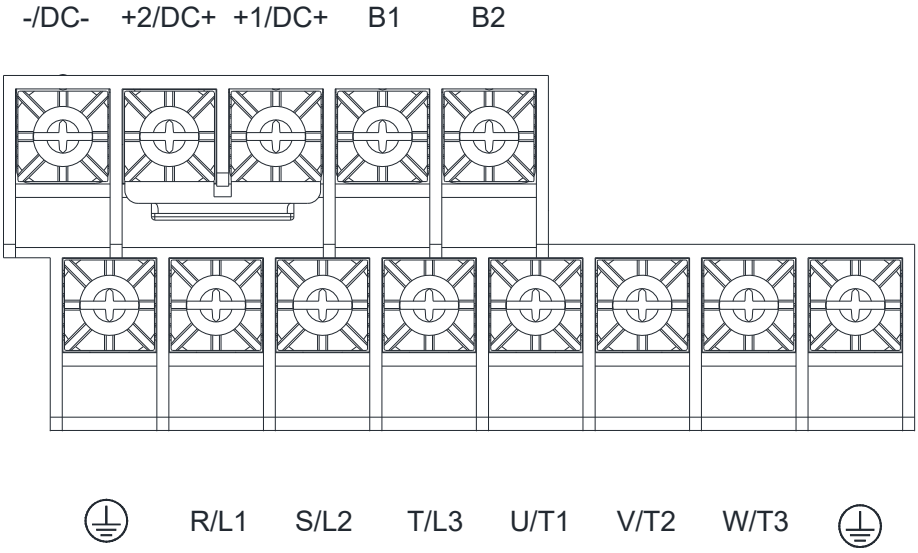

- If you install at Ta 50°C environment, use copper wires that have a voltage rating of 600V and are temperature resistance to 75°C or 90°C.
- If you install at Ta 50°C above environment, use copper wires that have a voltage rating of 600V and are temperature resistance to 90°C or above.
- For VFD110C23A-21 models: if you install at Ta 45°C above environment, use copper wires that have a voltage rating of 600V and are temperature resistance to 90°C or above.
- To be UL installation compliant, you must use copper wires when installing. The wire gauge is based on temperature resistance of 75°C, in accordance with UL requirements and recommendations. Do not reduce the wire gauge when using high-temperature resistant wire.
- +2/DC+ and +1/DC+: with 45 kg-cm / [39.0 lb-in] / [4.42 Nm] (±10%) torque

Model Name	Main Circuit Terminals R/L1、S/L2、T/L3、U/T1、V/T2、W/T3、-/DC-、+1/DC+、+2/DC+、B1、B2			Terminal ⏚		
	Max. Wire Gauge	Min. Wire Gauge	Screw Spec. and Torque (±10%)	Max. Wire Gauge	Min. Wire Gauge	Screw Spec. and Torque (±10%)
VFD055C23A-21	25 mm² [4 AWG]	10 mm² [8 AWG]	M5 35 kg-cm [30.4 lb-in.] [3.43 Nm]	10 mm² [8 AWG]	10 mm² [8 AWG]	M5 35 kg-cm [30.4 lb-in.] [3.43 Nm]
VFD075C23A-21		16 mm² [6 AWG]		16 mm² [6 AWG]	16 mm² [6 AWG]	
VFD110C23A-21		25 mm² [4 AWG]		25 mm² [4 AWG]	16 mm² [6 AWG]	
VFD075C43A-21		10 mm² [8 AWG]		10 mm² [8 AWG]	10 mm² [8 AWG]	
VFD075C4EA-21		10 mm² [8 AWG]		10 mm² [8 AWG]	10 mm² [8 AWG]	
VFD110C43A-21		10 mm² [8 AWG]		10 mm² [8 AWG]	10 mm² [8 AWG]	
VFD110C4EA-21		10 mm² [8 AWG]		10 mm² [8 AWG]	10 mm² [8 AWG]	
VFD150C43A-21		16 mm² [6 AWG]		16 mm² [6 AWG]	16 mm² [6 AWG]	
VFD150C4EA-21		16 mm² [6 AWG]		16 mm² [6 AWG]	16 mm² [6 AWG]	
VFD055C53A-21		6 mm² [10 AWG]		6 mm² [10 AWG]	6 mm² [10 AWG]	
VFD075C53A-21		6 mm² [10 AWG]		6 mm² [10 AWG]	6 mm² [10 AWG]	
VFD110C53A-21		10 mm² [8 AWG]		10 mm² [8 AWG]	10 mm² [8 AWG]	
VFD150C53A-21		10 mm² [8 AWG]		10 mm² [8 AWG]	10 mm² [8 AWG]	

Frame C

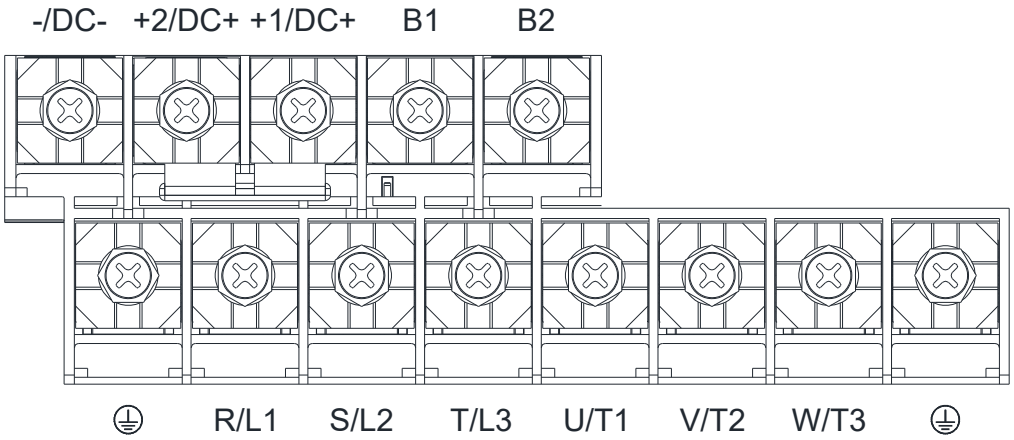

- If you install at Ta 50°C environment, use copper wires that have a voltage rating of 600V and are temperature resistance to 75°C or 90°C.
- If you install at Ta 50°C above environment, use copper wires that have a voltage rating of 600V and are temperature resistance to 90°C or above.
- For VFD220C23A-21 models: if you insall at Ta 40°C above environment, use copper wires have a voltage rating of 600V and are temperature resistance to 90°C or above.
- To be UL installation compliant, you must use copper wires when installing. The wire gauge is based on temperature resistance of 75°C, in accordance with UL requirements and recommendations. Do not reduce the wire gauge when using high-temperature resistant wire.
- +2/DC+ and +1/DC+: with 90 kg-cm / [78.2 lb-in] / [8.83 Nm] (±10%) torque

Model Name	Main Circuit Terminals R/L1、S/L2、T/L3、U/T1、V/T2、W/T3、-/DC-、+1/DC+、+2/DC+、B1、B2			Terminal ⏚		
	Max. Wire Gauge	Min. Wire Gauge	Screw Spec. and Torque (±10%)	Max. Wire Gauge	Min. Wire Gauge	Screw Spec. and Torque (±10%)
VFD150C23A-21	50 mm² [1/0 AWG]	50 mm² [1 AWG]	M8 80 kg-cm [69.4 lb-in.] [7.84 Nm]	50 mm² [1 AWG]	25 mm² [4 AWG]	M8 80 kg-cm [69.4 lb-in.] [7.84 Nm]
VFD185C23A-21		50 mm² [1/0 AWG]		50 mm² [1/0 AWG]	25 mm² [4 AWG]	
VFD220C23A-21		50 mm² [1/0 AWG]		50 mm² [1/0 AWG]	25 mm² [4 AWG]	
VFD185C43A-21		25 mm² [4 AWG]		25 mm² [4 AWG]	16 mm² [6 AWG]	
VFD220C43A-21		25 mm² [4 AWG]		25 mm² [4 AWG]	16 mm² [6 AWG]	
VFD300C43A-21		35 mm² [2 AWG]		35 mm² [2 AWG]	16 mm² [6 AWG]	
VFD185C4EA-21		25 mm² [4 AWG]		25 mm² [4 AWG]	16 mm² [6 AWG]	
VFD220C4EA-21		25 mm² [4 AWG]		25 mm² [4 AWG]	16 mm² [6 AWG]	
VFD300C4EA-21		35 mm² [2 AWG]		35 mm² [2 AWG]	16 mm² [6 AWG]	
VFD185C63B-21		10 mm² [8 AWG]		10 mm² [8 AWG]	10 mm² [8 AWG]	
VFD220C63B-21		16 mm² [6 AWG]		16 mm² [6 AWG]	16 mm² [6 AWG]	
VFD300C63B-21		25 mm² [4 AWG]		25 mm² [4 AWG]	16 mm² [6 AWG]	
VFD370C63B-21		35 mm² [2 AWG]		35 mm² [2 AWG]	16 mm² [6 AWG]	

Frame D0

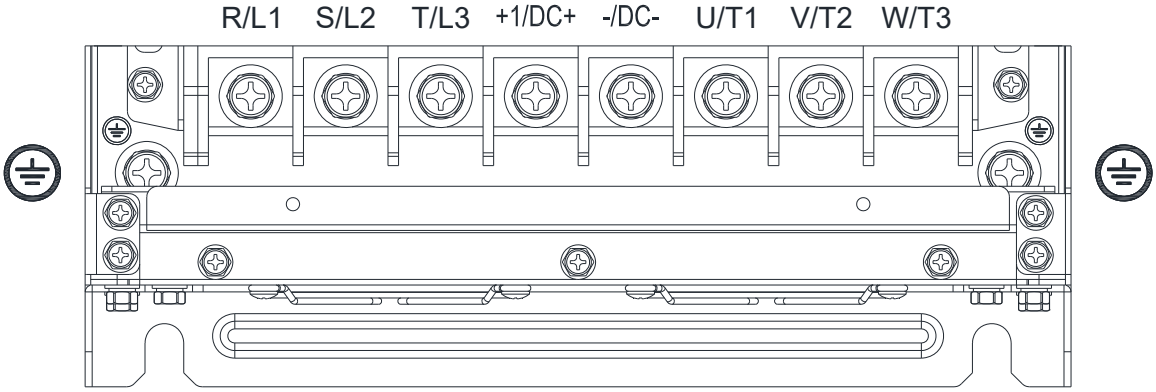

- If you install at Ta 40°C (for model names with last digit -21) / 50°C (for model names with last digit -00) environment, use copper wires have a voltage rating of 600V and are temperature resistance to 75°C or 90°C.
- If you install at Ta 40°C (for model names with last digit -21) / 50°C (for model names with last digit -00) above environment, use copper wires have a voltage rating of 600V and are temperature resistant ntance to 90°C or above.
- To be UL installation compliant, you must use copper wires when installing. The wire gauge is based on temperature resistance of 75°C, in accordance with UL requirements and recommendations. Do not reduce the wire gauge when using high-temperature resistant wire.

Model Name	Main Circuit Terminals R/L1、S/L2、T/L3、U/T1、V/T2、W/T3、-/DC-、+1/DC+			Terminal ⏚		
	Max. Wire Gauge	Min. Wire Gauge	Screw Spec. and Torque (±10%)	Max. Wire Gauge	Min. Wire Gauge	Screw Spec. and Torque (±10%)
VFD370C43S-00	70 mm^2 [2/0 AWG]	50 mm^2 [1/0 AWG]	M8 80 kg-cm [69.4 lb-in.] [7.84 Nm]	35 mm^2 [2 AWG]	25 mm^2 [4 AWG]	M8 80 kg-cm [69.4 lb-in.] [7.84 Nm]
VFD450C43S-00		70mm^2 [2/0 AWG]				
VFD370C43S-21		50 mm^2 [1/0 AWG]				
VFD450C43S-21		70mm^2 [2/0 AWG]				

Frame D

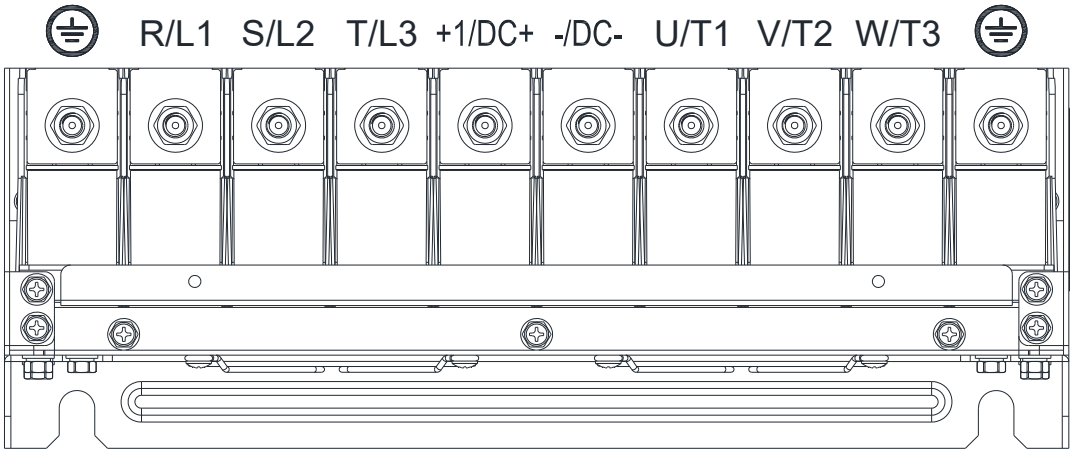

- If you install at Ta 40°C (for 230V / 460V model names with last digit -21; for 690V model names end with 63B-21) / 50°C (for 230V / 460V model names with last digit -00; for 690V model names end with 63B-00) environment, use copper wires have a voltage rating of 600V and are temperature resistance to 75°C or 90°C.
- If you install at Ta 40°C (for 230V / 460V model names with last digit -21; for 690V model names end with 63B-21) / 50°C (for 230V / 460V model names with last digit -00; for 690V model names end with 63B-00) above environmnet, use copper wires that have a voltage rating of 600V and are temperature resistance to 90°C or above.
- To be UL installation compliant, you must use copper wires when installing. The wire gauge is based on temperature resistance of 75°C, in accordance with UL requirements and recommendations. Do not reduce the wire gauge when using high-temperature resistant wire.

Model Name	Main Circuit Terminals R/L1、S/L2、T/L3、U/T1、V/T2、W/T3、-/DC-、+1/DC+			Terminal ⏚		
	Max. Wire Gauge	Min. Wire Gauge	Screw Spec. and Torque (±10%)	Max. Wire Gauge	Min. Wire Gauge	Screw Spec. and Torque (±10%)
VFD300C23A-00	150 mm² [300 MCM]	120 mm² [4/0 AWG]	M8 180 kg-cm [156.2 lb-in.] [17.65 Nm]	120 mm² [4/0 AWG]	70 mm² [2/0 AWG]	M8 180 kg-cm [156.2 lb-in.] [17.65 Nm]
VFD370C23A-00		120 mm² [250MCM]		120 mm² [250MCM]	70 mm² [2/0 AWG]	
VFD550C43A-00		95 mm² [3/0 AWG]		95 mm² [3/0 AWG]	50 mm² [1/0 AWG]	
VFD750C43A-00		150 mm² [300MCM]		150 mm² [300MCM]	95 mm² [3/0 AWG]	
VFD300C23A-21	120 mm² [4/0 AWG]	95 mm² [3/0 AWG]		95 mm² [3/0 AWG]	50 mm² [1/0 AWG]	
VFD370C23A-21		120 mm² [4/0 AWG]		120 mm² [4/0 AWG]	70 mm² [2/0 AWG]	
VFD550C43A-21		70 mm² [2/0 AWG]		70 mm² [2/0 AWG]	35 mm² [2 AWG]	
VFD750C43A-21		120 mm² [4/0 AWG]		120 mm² [4/0 AWG]	70 mm² [2/0 AWG]	
VFD450C63B-00	150 mm² [300 MCM]	35 mm² [2 AWG]		35 mm² [2 AWG]	16 mm² [6 AWG]	
VFD550C63B-00		35 mm² [2 AWG]		35 mm² [2 AWG]	16 mm² [6 AWG]	
VFD450C63B-21		35 mm² [2 AWG]		35 mm² [2 AWG]	16 mm² [6 AWG]	
VFD550C63B-21		35 mm² [2 AWG]		35 mm² [2 AWG]	16 mm² [6 AWG]	

Frame E

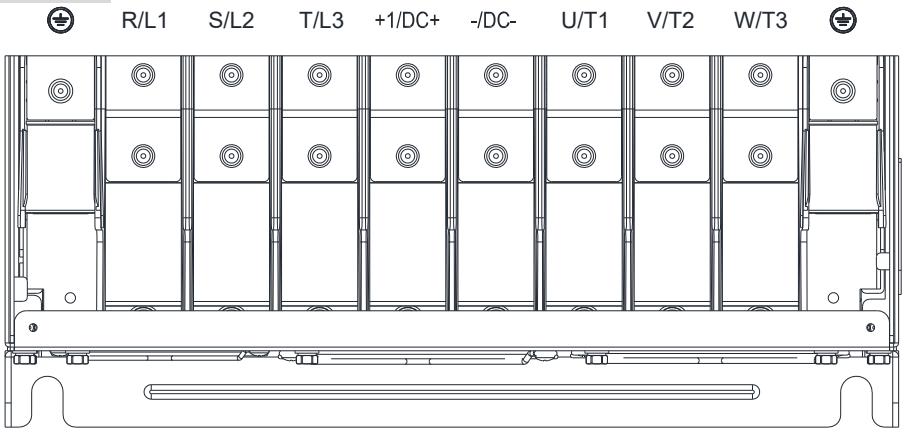

- If you install at Ta 40°C (for 230V / 460V model names with last digit -21; for 690V model names end with 63B-21) / 50°C (for 230V / 460V model names with last digit -00; for 690V model names end with 63B-00) environment, use copper wires have a voltage rating of 600V and are temperature resistance to 75°C or 90°C.
- If you install at Ta 40°C (for 230V / 460V model names with last digit -21; for 690V model names end with 63B-21) / 50°C (for 230V / 460V model names with last digit -00; for 690V model names end with 63B-00) above environment, use copper wires have a voltage rating of 600V and are temperature resistant ntance to 90°C or above.
- To be UL installation compliant, you must use copper wires when installing. The wire gauge is based on temperature resistance of 75°C, in accordance with UL requirements and recommendations. Do not reduce the wire gauge when using high-temperature resistant wire.

Model Name	Main Circuit Terminals R/L1、S/L2、T/L3、U/T1、V/T2、W/T3、-/DC-、+1/DC+			Terminal ⏚		
	Max. Wire Gauge	Min. Wire Gauge	Screw Spec. and Torque (±10%)	Max. Wire Gauge	Min. Wire Gauge	Screw Spec. and Torque (±10%)
VFD450C23A-00	120 mm²*2 [4/0 AWG*2]	50 mm²*2 [1/0 AWG*2]	M8 180 kg-cm [156.2 lb-in.] [17.65 Nm]	50mm²*2 [1/0 AWG*2]	50 mm²*1 [1/0 AWG*1]	M8 180 kg-cm [156.2 lb-in.] [17.65 Nm]
VFD550C23A-00		95 mm²*2 [3/0 AWG*2]		95mm²*2 [3/0 AWG*2]	95 mm²*1 [3/0 AWG*1]	
VFD750C23A-00		120 mm²*2 [4/0 AWG*2]		120mm²*2 [4/0 AWG*2]	120 mm²*1 [4/0 AWG*1]	
VFD900C43A-00		50 mm²*2 [1/0 AWG*2]		50mm²*2 [1/0 AWG*2]	50 mm²*1 [1/0 AWG*1]	
VFD1100C43A-00		95 mm²*2 [3/0 AWG*2]		95mm²*2 [3/0 AWG*2]	95 mm²*1 [3/0 AWG*1]	
VFD450C23A-21		50 mm²*2 [1/0 AWG*2]		50mm²*2 [1/0 AWG*2]	50 mm²*1 [1/0 AWG*1]	
VFD550C23A-21		70 mm²*2 [2/0 AWG*2]		70mm²*2 [2/0 AWG*2]	70 mm²*1 [2/0 AWG*1]	
VFD750C23A-21		95 mm²*2 [3/0 AWG*2]		95mm²*2 [3/0 AWG*2]	95 mm²*1 [3/0 AWG*1]	
VFD900C43A-21		50 mm²*2 [1/0 AWG*2]		50mm²*2 [1/0 AWG*2]	50 mm²*1 [1/0 AWG*1]	
VFD1100C43A-21		70 mm²*2 [2/0 AWG*2]		70mm²*2 [2/0 AWG*2]	70 mm²*1 [2/0 AWG*1]	
VFD750C63B-00		25 mm²*2 [4 AWG*2]		25 mm²*2[4 AWG*2]	25 mm²*1 [4 AWG*1]	
VFD900C63B-00		35 mm²*2 [2 AWG*2]		35 mm²*2 [2 AWG*2]	35 mm²*1 [2 AWG*1]	
VFD1100C63B-00		35 mm²*2 [2 AWG*2]		35 mm²*2 [2 AWG*2]	35 mm²*1 [2 AWG*1]	
VFD1320C63B-00		50 mm²*2 [1/0 AWG*2]		50 mm²*2 [1/0 AWG*2]	50 mm²*1 [1/0 AWG*1]	
VFD750C63B-21		25 mm²*2 [4 AWG*2]		25 mm²*2 [4 AWG*2]	25 mm²*1 [4 AWG*1]	
VFD900C63B-21		35 mm²*2 [2 AWG*2]		35 mm²*2 [2 AWG*2]	35 mm²*1 [2 AWG*1]	
VFD1100C63B-21		35 mm²*2 [2 AWG*2]		35 mm²*2 [2 AWG*2]	35 mm²*1 [2 AWG*1]	
VFD1320C63B-21		50 mm²*2 [1/0 AWG*2]		50 mm²*2 [1/0 AWG*2]	50 mm²*1 [1/0 AWG*1]	

Frame F

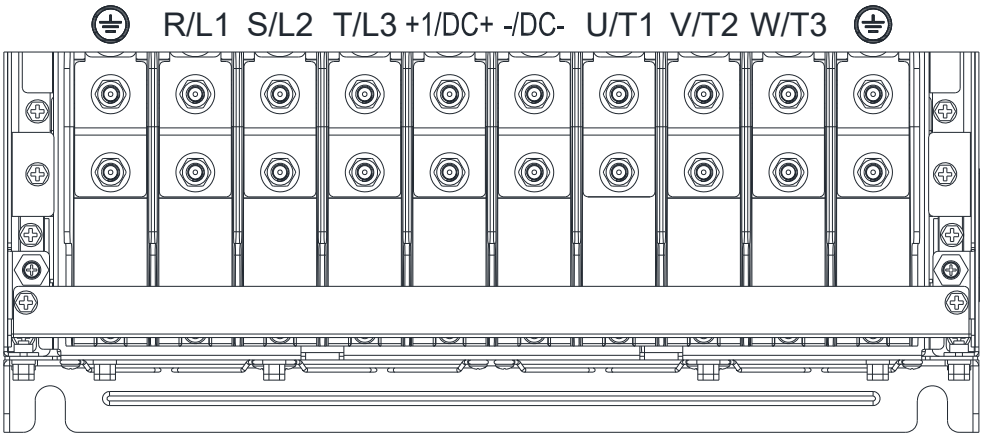

- If you install at Ta 40°C (for 230V / 460V model names with last digit -21; for 690V model names end with 63B-21) / 50°C (for 230V / 460V model names with last digit -00; for 690V model names end with 63B-00) environment, use copper wires have a voltage rating of 600V and are temperature resistance to 75°C or 90°C.
- If you install at Ta 40°C (for 230V / 460V model names with last digit -21; for 690V model names end with 63B-21) / 50°C (for 230V / 460V model names with last digit -00; for 690V model names end with 63B-00) above environment, use copper wires have a voltage rating of 600V and are temperature resistant ntance to 90°C or above.
- For VFD900C23A-00 models: if you install at Ta 45°C above environment, use copper wires that have a voltage rating of 600V and are temperature resistance to 90°C or above.
- For VFD900C23E-21 models: if you install at Ta 30°C above environment, use copper wires that have a voltage rating of 600V and are temperature resistance to 90°C or above.
- To be UL installation compliant, you must use copper wires when installing. The wire gauge is based on temperature resistance of 75°C, in accordance with UL requirements and recommendations. Do not reduce the wire gauge when using high-temperature resistant wire.

Model Name	Main Circuit Terminals R/L1、S/L2、T/L3、U/T1、V/T2、W/T3、-/DC-、+1/DC+			Terminal ⏚		
	Max. Wire Gauge	Min. Wire Gauge	Screw Spec. and Torque (±10%)	Max. Wire Gauge	Min. Wire Gauge	Screw Spec. and Torque (±10%)
VFD900C23A-00	150 mm²*2 [300 MCM*2]	150 mm²*2 [300MCM*2]	M8 180 kg-cm [156.2 lb-in.] [17.65 Nm]	150 mm²*2 [300 MCM*2]	150 mm²*1 [300 MCM*1]	M8 180 kg-cm [156.2 lb-in.] [17.65 Nm]
VFD1320C43A-00		120 mm²*2 [4/0 AWG*2]		120 mm²*2 [4/0 AWG*2]	120 mm²*1 [4/0 AWG*1]	
VFD1600C43A-00		150 mm²*2 [300MCM*2]		150 mm²*2 [300 MCM*2]	150 mm²*1 [300 MCM*1]	
VFD900C23A-21	120 mm²*2 [4/0 AWG*2]	120 mm²*2 [4/0 AWG*2]		120 mm²*2 [4/0 AWG*2]	120 mm²*1 [4/0 AWG*1]	
VFD1320C43A-21		95 mm²*2 [3/0 AWG*2]		95 mm²*2 [3/0 AWG*2]	95 mm²*1 [3/0 AWG*1]	
VFD1600C43A-21		120 mm²*2 [4/0 AWG*2]		120 mm²*2 [4/0AWG*2]	120 mm²*1 [4/0 AWG*1]	
VFD1600C63B-00	150 mm²*2 [300 MCM*2]	70 mm²*2 [2/0 AWG*2]		70 mm²*2 [2/0 AWG*2]	70 mm²*1 [2/0 AWG*1]	
VFD2000C63B-00		95 mm²*2 [3/0 AWG*2]		95 mm²*2 [3/0 AWG*2]	95 mm²*1 [3/0 AWG*1]	
VFD1600C63B-21		70 mm²*2 [2/0 AWG*2]		70 mm²*2 [2/0 AWG*2]	70 mm²*1 [2/0 AWG*1]	
VFD2000C63B-21		95 mm²*2 [3/0 AWG*2]		95 mm²*2 [3/0 AWG*2]	95 mm²*1 [3/0 AWG*1]	

Frame G

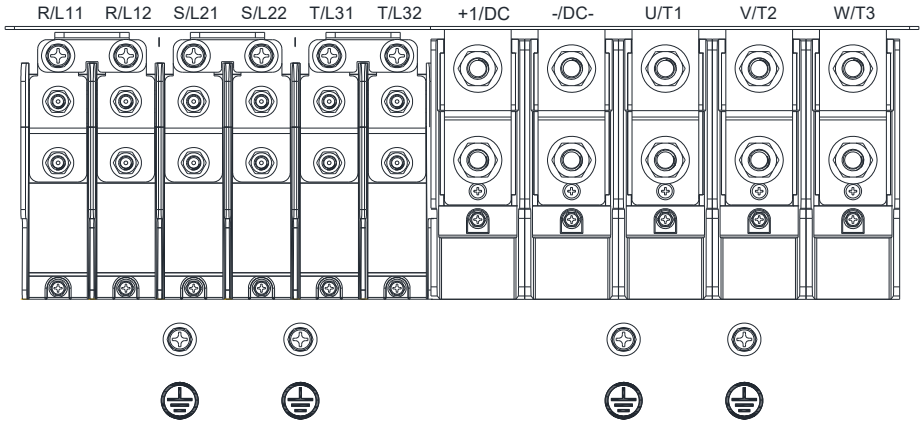

- If you install at Ta 40°C (for 460V model names with last digit -21; for 690V model names end with 63B-21) / 50°C (for 460V model names with last digit -00; for 690V model names end with 63B-00) environment, use copper wires have a voltage rating of 600V and are temperature resistance to 75°C or 90°C.
- If you install at Ta 40°C (for 460V model names with last digit -21; for 690V model names end with 63B-21) / 50°C (for 460V model names with last digit -00; for 690V model names end with 63B-00) above environment, use copper wires have a voltage rating of 600V and are temperature resistant ntance to 90°C or above.
- For VFD2200C43A-00, VFD2500C43A-00 (main circuit terminals U/T1, V/T2, W/T3, －/DC-, ＋/DC+) models: if you install at Ta 45°C above environment, use copper wires that have a voltage rating of 600V and are temperature resistance to 90°C or above.
- To be UL installation compliant, you must use copper wires when installing. The wire gauge is based on temperature resistance of 75°C, in accordance with UL requirements and recommendations. Do not reduce the wire gauge when using high-temperature resistant wire.

Model Name	Main Circuit Terminals R/L11、R/L12、S/L21、S/L22、T/L31、T/L32			Terminal ⏚		
	Max. Wire Gauge	Min. Wire Gauge	Screw Spec. and Torque (±10%)	Max. Wire Gauge	Min. Wire Gauge	Screw Spec. and Torque (±10%)
VFD1850C43A-00	120 mm²*4 [250MCM*4]	70 mm²*4 [2/0 AWG*4]	M8 180 kg-cm [156.2 lb-in.] [17.65 Nm]	70 mm²*4 [2/0AWG*4]	70 mm²*2 [2/0 AWG*2]	M8 180 kg-cm [156.2 lb-in.] [17.65 Nm]
VFD2000C43A-00		70 mm²*4 [2/0 AWG*4]		70 mm²*4 [2/0AWG*4]	70 mm²*2 [2/0 AWG*2]	
VFD2200C43A-00		70 mm²*4 [2/0 AWG*4]		70 mm²*4 [2/0AWG*4]	70 mm²*2 [2/0 AWG*2]	
VFD2500C43A-00		95 mm²*4 [3/0 AWG*4]		95 mm²*4 [3/0AWG*4]	95 mm²*2 [3/0 AWG*2]	
VFD1850C43A-21		50 mm²*4 [1/0 AWG*4]		50 mm²*4 [1/0AWG*4]	50 mm²*2 [1/0 AWG*2]	
VFD2000C43A-21		50 mm²*4 [1/0 AWG*4]		50 mm²*4 [1/0AWG*4]	50 mm²*2 [1/0 AWG*2]	
VFD2200C43A-21		50 mm²*4 [1/0 AWG*4]		50 mm²*4 [1/0AWG*4]	50 mm²*2 [1/0 AWG*2]	
VFD2500C43A-21		70 mm²*4 [2/0 AWG*4]		70 mm²*4 [2/0AWG*4]	70 mm²*2 [2/0 AWG*2]	
VFD2500C63B-00	150mm²*4 [300MCM*4]	50 mm²*4 [1/0 AWG*4]		50 mm²*4 [1/0 AWG*4]	50 mm²*2 [1/0 AWG*2]	
VFD3150C63B-00		50 mm²*4 [1/0 AWG*4]		50 mm²*4 [1/0 AWG*4]	50 mm²*2 [1/0 AWG*2]	
VFD2500C63B-21		50 mm²*4 [1/0 AWG*4]		50 mm²*4 [1/0 AWG*4]	50 mm²*2 [1/0 AWG*2]	
VFD3150C63B-21		50 mm²*4 [1/0 AWG*4]		50 mm²*4 [1/0 AWG*4]	50 mm²*2 [1/0 AWG*2]	

Model Name	Main Circuit Terminals U/T1、V/T2、W/T3、-/DC-、+1/DC+			Terminal ⏚		
	Max. Wire Gauge	Min. Wire Gauge	Screw Spec. and Torque (±10%)	Max. Wire Gauge	Min. Wire Gauge	Screw Spec. and Torque (±10%)
VFD1850C43A-00	240 mm²*2 [500MCM*2]	185 mm²*2 [350MCM*2]	M12 408 kg-cm [354.1 lb-in.] [39.98 Nm]	185 mm²*2 [350MCM*2]	185 mm²*1 [350MCM*1]	M8 180 kg-cm [156.2 lb-in.] [17.65 Nm]
VFD2000C43A-00		240 mm²*2 [400MCM*2]		240 mm²*2 [400MCM*2]	240 mm²*1 [400MCM*1]	
VFD2200C43A-00		240 mm²*2 [500MCM*2]		240 mm²*2 [500MCM*2]	240 mm²*1 [500MCM*1]	
VFD2500C43A-00		240 mm²*2 [500MCM*2]		240 mm²*2 [500MCM*2]	240 mm²*1 [500MCM*1]	
VFD1850C43A-21		150 mm²*2 [300MCM*2]		150 mm²*2 [300MCM*2]	150 mm²*1 [300MCM*1]	
VFD2000C43A-21		150 mm²*2 [300MCM*2]		150 mm²*2 [300MCM*2]	150 mm²*1 [300MCM*1]	
VFD2200C43A-21		240 mm²*2 [400MCM*2]		240 mm²*2 [400MCM*2]	240 mm²*1 [400MCM*1]	
VFD2500C43A-21		240 mm²*2 [500MCM*2]		240 mm²*2 [500MCM*2]	240 mm²*1 [500MCM*1]	
VFD2500C63B-00		120 mm²*2 [250MCM*2]		120 mm²*2 [250MCM*2]	120 mm²*1 [250MCM*1]	
VFD3150C63B-00		150 mm²*2 [350MCM*2]		150 mm²*2 [350MCM*2]	150 mm²*1 [350MCM*1]	
VFD2500C63B-21		120 mm²*2 [250MCM*2]		120 mm²*2 [250MCM*2]	120 mm²*1 [250MCM*1]	
VFD3150C63B-21		150 mm²*2 [350MCM*2]		150 mm²*2 [350MCM*2]	150 mm²*1 [350MCM*1]	

Frame H

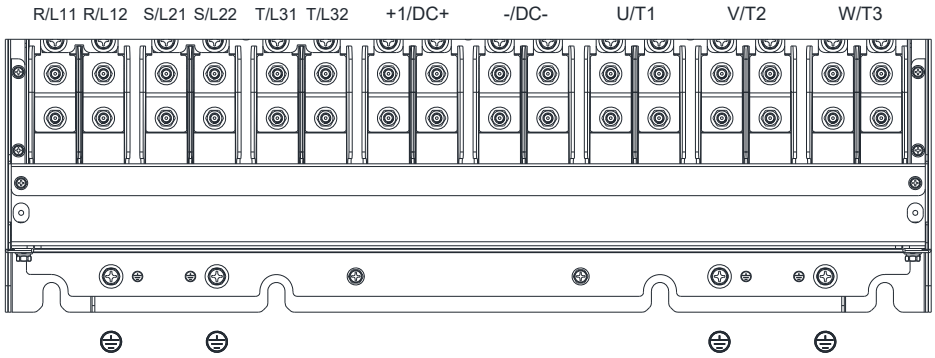

- If you install at Ta 40°C (for 460V model names with last digit -21; for 690V model names end with 63B-21) / 50°C (for 460V model names with last digit -00; for 690V model names end with 63B-00) environment, use copper wires have a voltage rating of 600V and are temperature resistance to 75°C or 90°C.
- If you install at Ta 40°C (for 460V model names with last digit -21; for 690V model names end with 63B-21) / 50°C (for 460V model names with last digit -00; for 690V model names end with 63B-00) above environment, use copper wires have a voltage rating of 600V and are temperature resistant ntance to 90°C or above.
- For VFD4000C43A-00, VFD4500C43A-00 models: if you install at Ta 40°C above environment, use copper wires that have a voltage rating of 600V and are temperature resistance to 90°C or above.
- To be UL installation compliant, you must use copper wires when installing. The wire gauge is based on temperature resistance of 75°C, in accordance with UL requirements and recommendations. Do not reduce the wire gauge when using high-temperature resistant wire.

Model Name	Main Circuit Terminals R/L11、R/L12、S/L21、S/L22、T/L31、T/L32、U/T1、V/T2、W/T3、-/DC-、+1/DC+			Terminal ⏚		
	Max. Wire Gauge	Min. Wire Gauge	Screw Spec. and Torque (±10%)	Max. Wire Gauge	Min. Wire Gauge	Screw Spec. and Torque (±10%)
VFD2800C43A-00	185 mm²*4 [350 MCM*4]	120 mm²*4 [4/0 AWG*4]	M8 180 kg-cm [156.2 lb-in.] [17.65 Nm]	120 mm²*4 [4/0AWG*4]	120 mm²*2 [4/0 AWG*2]	M8 180 kg-cm [156.2 lb-in.] [17.65 Nm]
VFD3150C43A-00		150 mm²*4 [300 MCM*4]		150 mm²*4 [300 MCM*4]	150 mm²*2 [300 MCM*2]	
VFD3550C43A-00		150 mm²*4 [300 MCM*4]		150 mm²*4 [300 MCM*4]	150 mm²*2 [300 MCM*2]	
VFD4000C43A-00		150 mm²*4 [300 MCM*4]		150 mm²*4 [300 MCM*4]	150 mm²*2 [300 MCM*2]	
VFD4500C43A-00		185 mm²*4 [350 MCM*4]		185 mm²*4 [350 MCM*4]	185 mm²*2 [350 MCM*2]	
VFD2800C43C-21		95 mm²*4 [3/0 AWG*4]		95 mm²*4 [3/0 AWG*4]	95 mm²*2 [3/0 AWG*2]	
VFD3150C43C-21		120 mm²*4 [4/0 AWG*4]		120 mm²*4 [4/0 AWG*4]	120 mm²*2 [4/0 AWG*2]	
VFD3550C43C-21		120 mm²*4 [250 MCM*4]		120 mm²*4 [250 MCM*4]	120 mm²*2 [250 MCM*2]	
VFD4000C43A-21		150 mm²*4 [300 MCM*4]		150 mm²*4 [300 MCM*4]	150 mm²*2 [300 MCM*2]	
VFD4500C43C-21		185 mm²*4 [350 MCM*4]		185 mm²*4 [350 MCM*4]	185 mm²*2 [350 MCM*2]	
VFD4000C63B-00		95 mm²*4 [3/0 AWG*4]		95 mm²*4 [3/0AWG*4]	95 mm²*2 [3/0 AWG*2]	
VFD4500C63B-00		95 mm²*4 [3/0 AWG*4]		95 mm²*4 [3/0AWG*4]	95 mm²*2 [3/0 AWG*2]	
VFD5600C63B-00		120 mm²*4 [250 MCM*4]		120 mm²*4 [250 MCM*4]	120 mm²*2 [250 MCM*2]	
VFD6300C63B-00		150 mm²*4 [300 MCM*4]		150 mm²*4 [300 MCM*4]	150 mm²*2 [300 MCM*2]	
VFD4000C63B-21		95 mm²*4 [3/0 AWG*4]		95 mm²*4 [3/0 AWG*4]	95 mm²*2 [3/0 AWG*2]	
VFD4500C63B-21		95 mm²*4 [3/0 AWG*4]		95 mm²*4 [3/0 AWG*4]	95 mm²*2 [3/0 AWG*2]	
VFD5600C63B-21		120 mm²*4 [250 MCM*4]		120 mm²*4 [250 MCM*4]	120 mm²*2 [250 MCM*2]	
VFD6300C63B-21		150 mm²*4 [300 MCM*4]		150 mm²*4 [300 MCM*4]	150 mm²*2 [300 MCM*2]	

Frame H

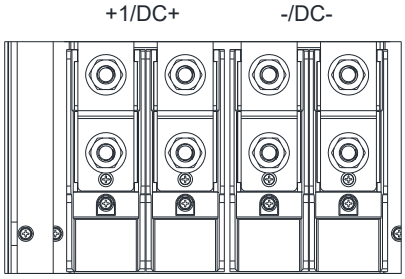

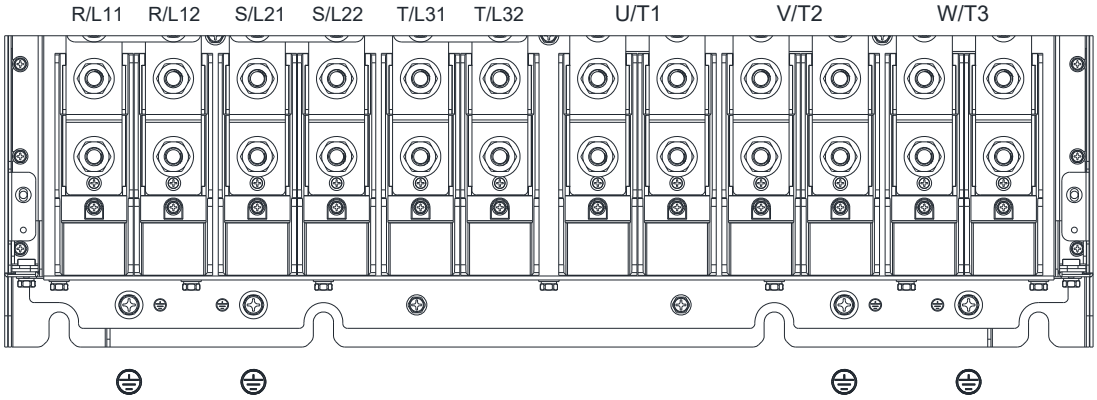

- If you install at Ta 40°C (model names with last digit C-21) / 50°C (model names with last digit A-00) environment, use copper wires have a voltage rating of 600V and are temperature resistance to 75°C or 90°C.
- If you install at Ta 40°C (model names with last digit C-21) / 50°C (model names with last digit A-00) above environment, use copper wires have a voltage rating of 600V and are temperature resistant ntance to 90°C or above.
- For VFD5000C43A-00 models: if you install at Ta 40°C above environment, use copper wires that have a voltage rating of 600V and are temperature resistance to 90°C or above.
- For VFD5600C43A-00, VFD5600C43C-21 models: if you install at Ta 30°C above environment, use copper wires that have a voltage rating of 600V and are temperature resistance to 90°C or above.
- To be UL installation compliant, you must use copper wires when installing. The wire gauge is based on temperature resistance of 75°C, in accordance with UL requirements and recommendations. Do not reduce the wire gauge when using high-temperature resistant wire.

Model Name	Main Circuit Terminals R/L11、R/L12、S/L21、S/L22、T/L31、T/L32、U/T1、V/T2、W/T3、-/DC-、+1/DC+			Terminal ⏚		
	Max. Wire Gauge	Min. Wire Gauge	Screw Spec. and Torque (±10%)	Max. Wire Gauge	Min. Wire Gauge	Screw Spec. and Torque (±10%)
VFD5000C43A-00	240 mm^2*4 [500 MCM*4]	240 mm^2*4 [400 MCM*4]	M12 408 kg-cm [354.1 lb-in.] [39.98 Nm]	240 mm^2*4 [400 MCM*4]	240 mm^2*2 [400 MCM*2]	M8 180 kg-cm [156.2 lb-in.] [17.65 Nm]
VFD5600C43A-00		240 mm^2*4 [500 MCM*4]		240 mm^2*4 [500 MCM*4]	240 mm^2*2 [500 MCM*2]	
VFD5000C43C-21		240 mm^2*4 [400 MCM*4]		240 mm^2*4 [400 MCM*4]	240 mm^2*2 [400 MCM*2]	
VFD5600C43C-21		240 mm^2*4 [500 MCM*4]		240 mm^2*4 [500 MCM*4]	240 mm^2*2 [500 MCM*2]	

[This page intentionally left blank]

Chapter 6 Control Terminals

6-1 Remove the Cover for Wiring

6-2 Control Terminal Specifications

6-3 Remove the Terminal Block

CAUTION

Analog input terminals (AVI, ACI, AUI, ACM)

☑ Analog input signals are easily affected by external noise. Use shielded wiring and keep it as short as possible (< 20m) with proper grounding. If the noise is inductive, connecting the shield to the ACM terminal can reduce interference.

☑ Use twisted-pair wire for weak analog signals.

☑ If the analog input signals are affected by noise from the AC motor drive, connect a capacitor and a ferrite core as shown in Figure 6-1.

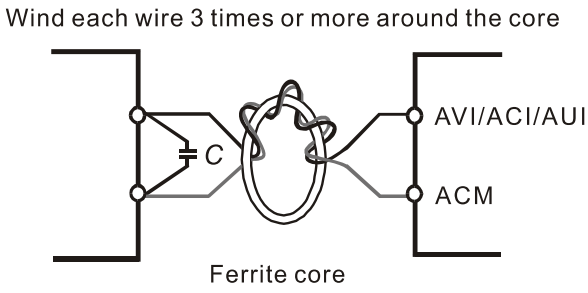

Figure 6-1

Contact input terminals (FWD, REV, MI1–MI8, COM)

☑ The “COM” terminal is the common side of the photo-coupler. Any of wiring method, the “common point” of all photo-coupler must be the “COM”.

① Sink Mode
with internal power (+24V$_{DC}$)

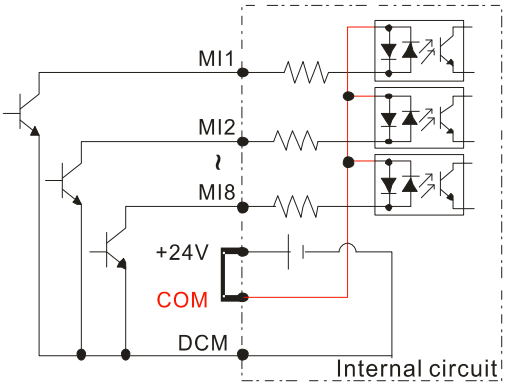

Figure 6-2

② Source Mode
with internal power (+24V$_{DC}$)

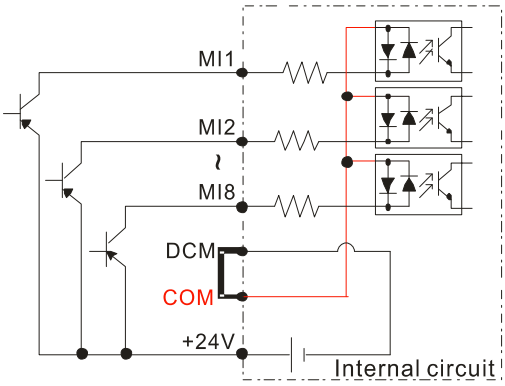

Figure 6-3

③ Sink Mode
with external power

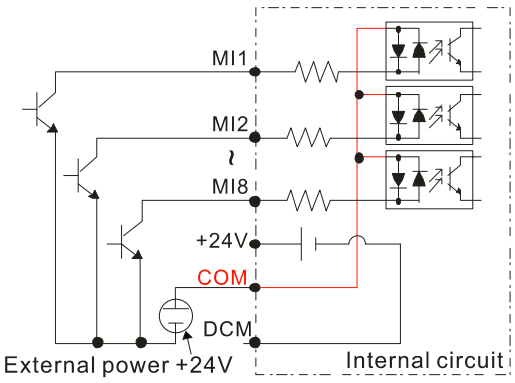

Figure 6-4

④ Source Mode
with external power

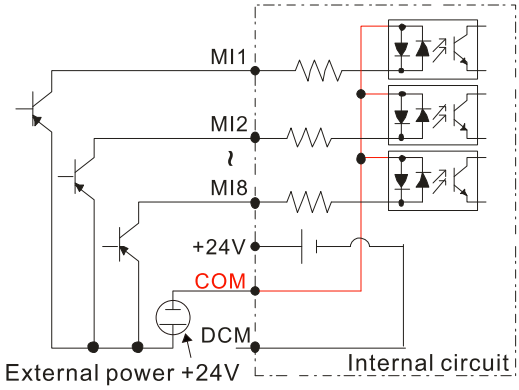

Figure 6-5

	☑ When the photo-coupler uses internal power supply, the switch connection for Sink and Source modes shows as Figure 6-2 and Figure 6-3: MI-DCM: Sink mode, MI-+24V: Source mode. ☑ When the photo-coupler uses external power supply, remove the short circuit cable between the +24V and COM terminals. The connection mode is Sink mode or Source mode according to the below: The “+” of 24V connects to “COM: Sink mode The “-“ of 24V connects to COM: Source mode **Transistor outputs (MO1, MO2, MCM)** ☑ Connect the digital outputs to the correct polarity. ☑ When connecting a relay to the digital outputs, connect a surge absorber across the coil and check the polarity.

6-1 Remove the Cover for Wiring

Remove the top cover before wiring the multi-function input and output terminals.

NOTE The drive appearances shown in the figures are for reference only, a real drive may look different.

Frame A & B

Applicable models: VFD007C23A-21; VFD007C43A-21; VFD007C4EA-21; VFD015C23A-21; VFD015C43A-21; VFD015C4EA-21; VFD015C53A-21; VFD022C23A-21; VFD022C43A-21; VFD022C4EA-21; VFD022C53A-21; VFD037C23A-21; VFD037C43A-21; VFD037C4EA-21; VFD037C53A-21; VFD040C43A-21; VFD040C4EA-21; VFD055C23A-21; VFD055C43A-21; VFD055C4EA-21; VFD055C53A-21; VFD075C23A-21; VFD075C43A-21; VFD075C4EA-21; VFD075C53A-21; VFD110C23A-21; VFD110C43A-21; VFD110C4EA-21; VFD110C53A-21; VFD150C43A-21; VFD150C4EA-21; VFD150C53A-21

Screw torque: 12–15 kg-cm / [10.4–13 lb-in.] / [1.2–1.5 Nm]

Loosen the screws and press the tabs on both sides to remove the cover.

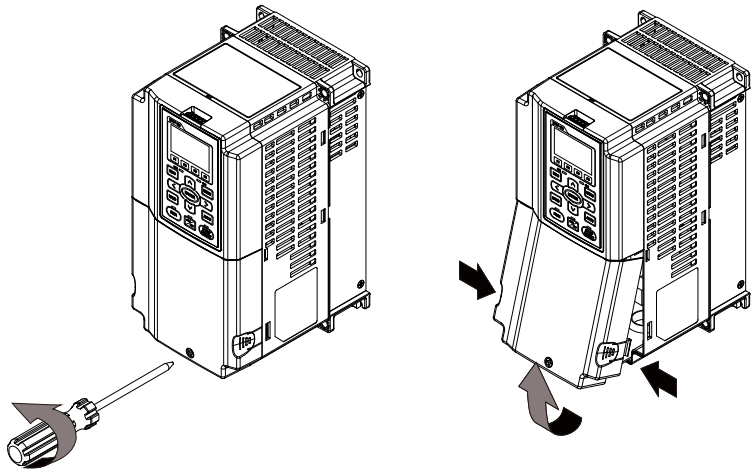

Figure 6-6

Frame C

Applicable models: VFD150C23A-21; VFD185C23A-21; VFD185C43A-21; VFD185C4EA-21; VFD185C63B-21; VFD220C23A-21; VFD220C43A-21; VFD220C4EA-21; VFD220C63B-21; VFD300C43A-21; VFD300C4EA-21; VFD300C63B-21; VFD370C63B-21

Screw torque: 12–15 kg-cm / [10.4–13 lb-in.] / [1.2–1.5 Nm]

Loosen the screws and press the tabs on both sides to remove the cover.

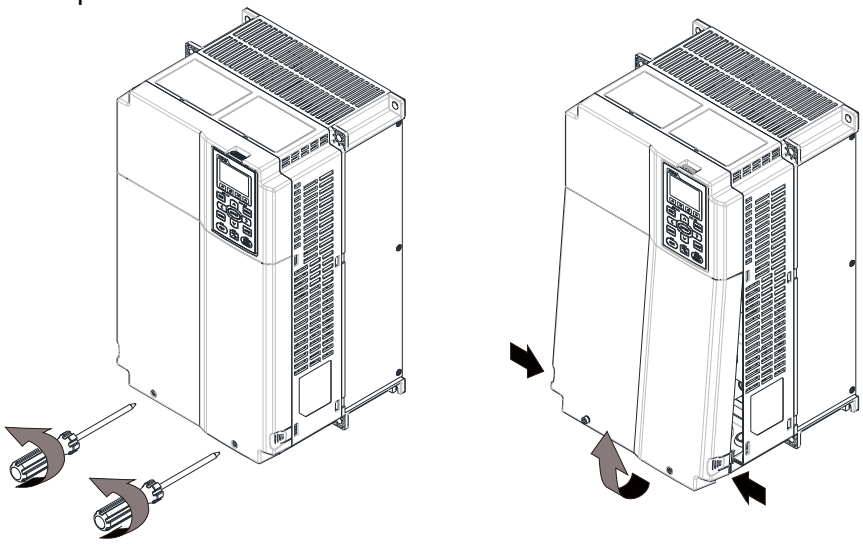

Figure 6-7

Frame D0 & D

Applicable models: VFD300C23A-00; VFD300C23A-21; VFD370C23A-00; VFD370C23A-21; VFD370C43S-00; VFD370C43S-21; VFD450C43S-00; VFD450C43S-21; VFD450C63B-00; VFD450C63B-21; VFD550C43A-00; VFD550C43A-21; VFD750C43A-00; VFD750C43A-21; VFD550C63B-00; VFD550C63B-21

Screw torque: 12–15 kg-cm / [10.4–13 lb-in.] / [1.2–1.5 Nm]

To remove the cover, lift it slightly and pull outward.

Loosen the screws and press the tabs on both sides to remove the cover.

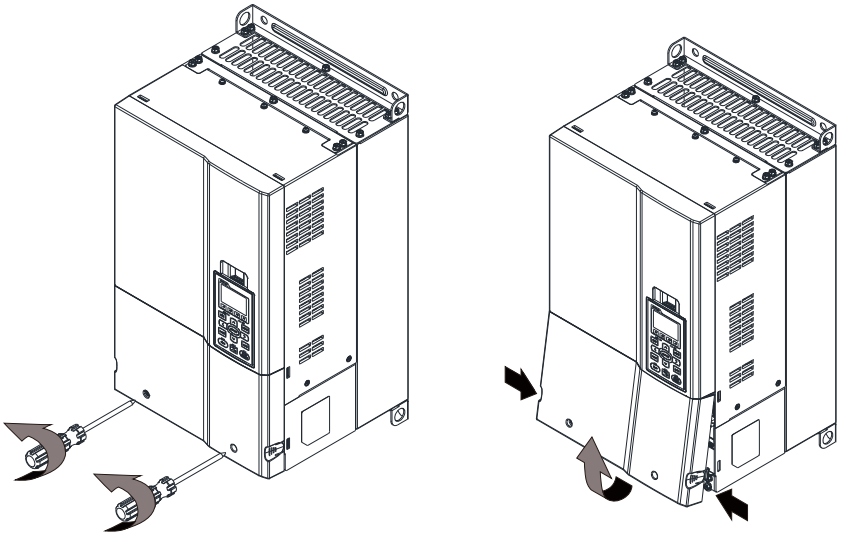

Figure 6-8

Frame E

Applicable models: VFD450C23A-00; VFD450C23A-21; VFD550C23A-00; VFD550C23A-21; VFD750C23A-00; VFD750C23A-21; VFD750C63B-00; VFD750C63B-21; VFD900C43A-00; VFD900C43A-21; VFD900C63B-00; VFD900C63B-21; VFD1100C43A-00; VFD1100C43A-21; VFD1100C63B-00; VFD1100C63B-21; VFD1320C63B-00; VFD1320C63B-21

Screw torque: 12–15 kg-cm / [10.4–13 lb-in.] / [1.2–1.5 Nm]

To remove the cover, lift it slightly and pull outward.

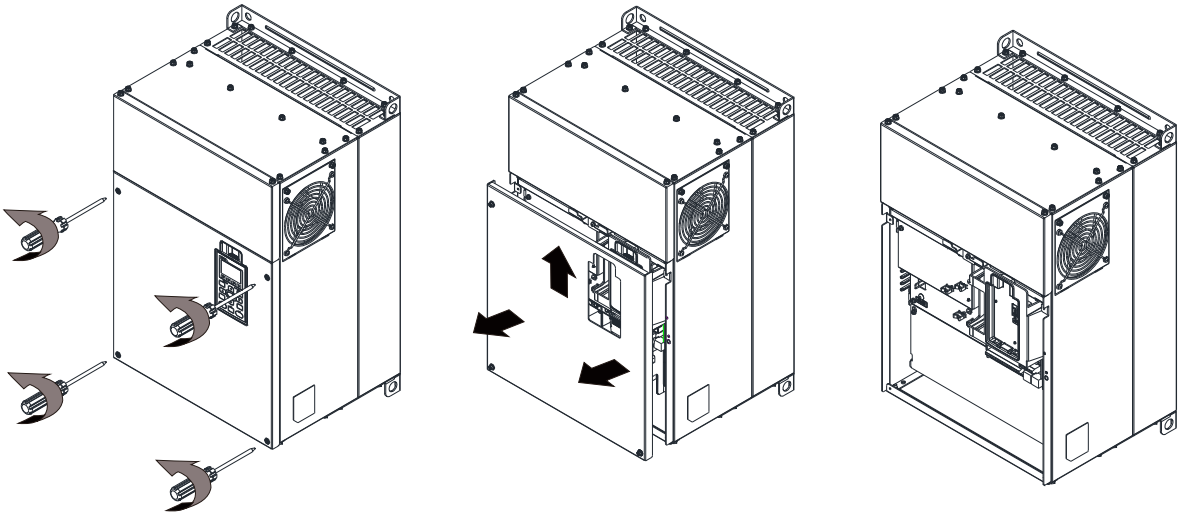

Figure 6-9

Frame F

Applicable models: VFD900C23A-00; VFD900C23A-21; VFD1320C43A-00; VFD1320C43A-21; VFD1600C43A-00; VFD1600C43A-21; VFD1600C63B-00; VFD1600C63B-21; VFD2000C63B-00; VFD2000C63B-21

Screw torque: 12–15 kg-cm / [10.4–13 lb-in.] / [1.2–1.5 Nm]

To remove the cover, lift it slightly and pull outward.

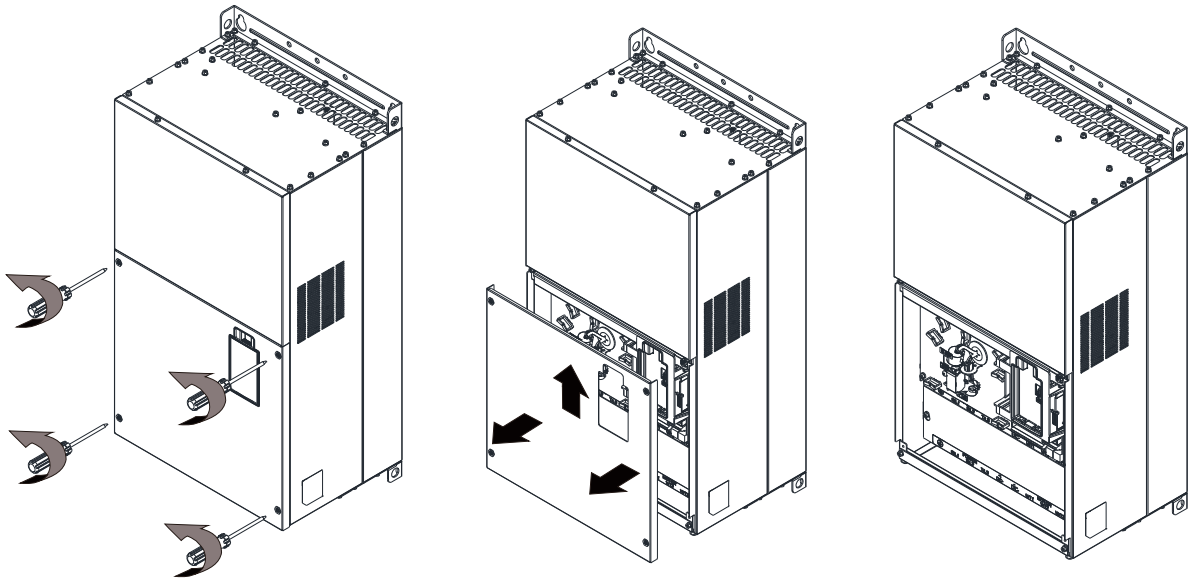

Figure 6-10

Frame G

Applicable models: VFD1850C43A-00; VFD1850C43A-21; VFD2000C43A-00; VFD2000C43A-21; VFD2200C43A-00; VFD2200C43A-21; VFD2500C43A-00; VFD2500C43A-21; VFD2500C63B-00; VFD2500C63B-21; VFD3150C63B-00; VFD3150C63B-21

Screw torque: 12–15 kg-cm / [10.4–13 lb-in.] / [1.2–1.5 Nm]

To remove the cover, lift it slightly and pull outward.

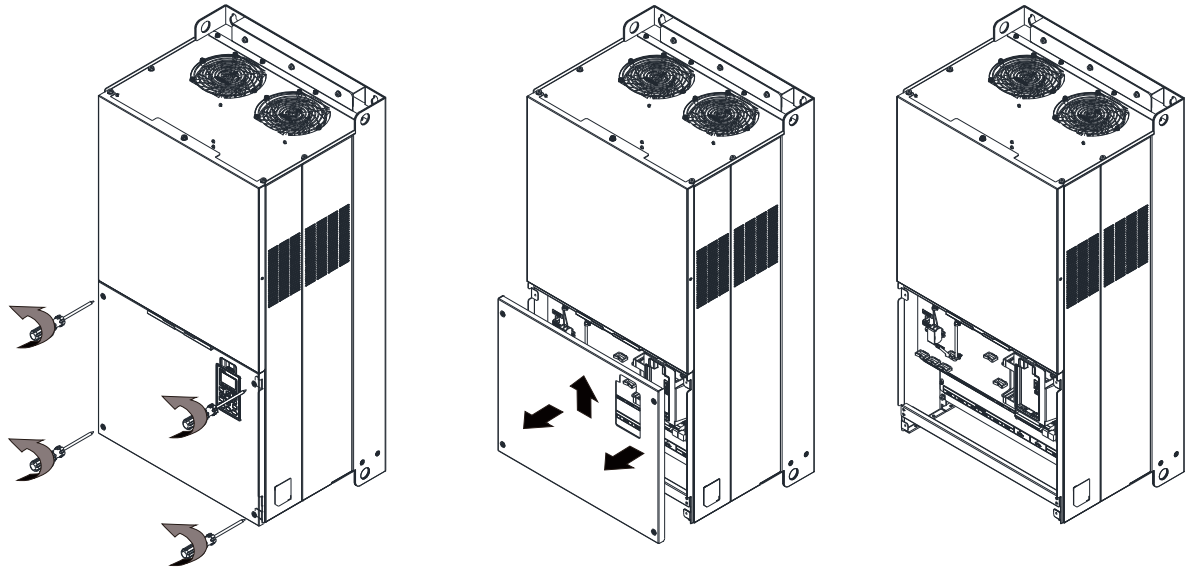

Figure 6-11

Frame H

Applicable models: VFD2800C43A-00; VFD2800C43C-21; VFD3150C43A-00; VFD3150C43C-21; VFD3550C43A-00; VFD3550C43C-21; VFD4000C43A-00; VFD4000C43C-21; VFD4000C63B-00; VFD4500C43A-00; VFD4500C43C-21; VFD4500C63B-00; VFD5000C43A-00; VFD5000C43C-21; VFD5600C43A-00; VFD5600C43C-21; VFD5600C63B-00; VFD6300C63B-00

Screw torque: 14–16 kg-cm / [12.15–13.89 lb-in.] / [1.4–1.6 Nm]

To remove the cover, lift it slightly and pull outward.

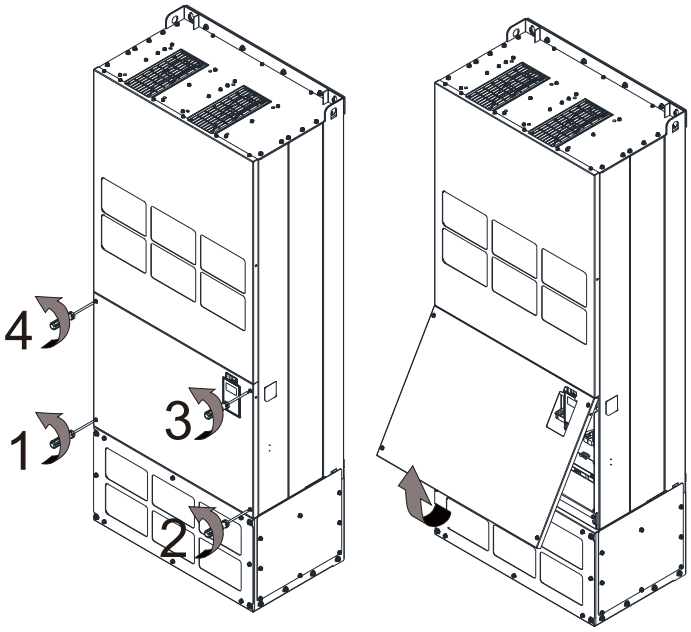

Figure 6-12

690V Frame H3

Applicable models: VFD4000C63B-21; VFD4500C63B-21; VFD5600C63B-21; VFD6300C63B-21

Screw torque: 14–16 kg-cm [12.15–13.89 lb-in.] [1.37–1.57 Nm]

To remove the cover, lift it slightly and pull outward.

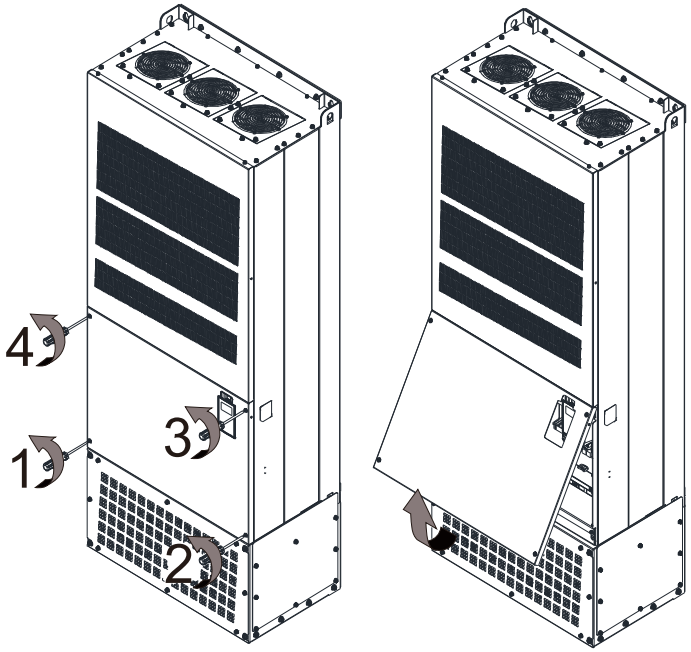

Figure 6-13

6-2 Control Terminal Specifications

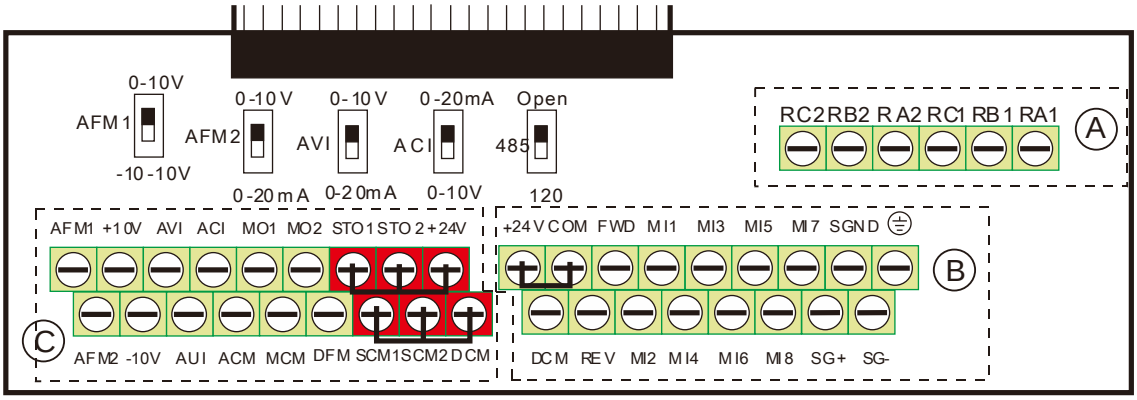

Figure 6-14. Removable Terminal Block

Function name	Area	Conductor	Stripping Length (mm)	Maximum Wire Gauge	Minimum Wire Gauge	Tightening Torque (±10 %)
RELAY Terminals	Ⓐ	Conductor cross section solid wire	4–5	1.5 mm² [16 AWG]	0.2 mm² [26 AWG]	5 kg-cm [4.3 lb-in.] [0.49 Nm]
		Conductor cross section stranded wire				
Control Terminals	Ⓑ	Conductor cross section solid wire	6–7			8 kg-cm [6.9 lb-in.] [0.78 Nm]
		Conductor cross section stranded wire				
Control Terminals	Ⓒ	Conductor cross section solid wire				2 kg-cm [1.7 lb-in.] [0.20 Nm]
		Conductor cross section stranded wire				

Wiring precautions:

- In the figure above, the factory default for STO1, STO2, +24V and SCM1, SCM2, DCM are short-circuited. Use the +24V power supply of the safety function (as shown in section Ⓒ of above figure) for STO only. Do NOT use it for other purposes. The factory setting for +24V-COM is short-circuited and SINK mode (NPN); please refer to Chapter 4 Wiring for detail.
- Tighten the wiring with slotted screwdriver:
  Ⓐ Ⓑ is 3.5 mm (wide) x 0.6 mm (thick); Ⓒ is 2.5 mm (wide) x 0.4 mm (thick)
- When wiring bare wires, ensure that they are perfectly arranged to go through the wiring holes.

Terminals	Terminal Function	Factory Setting (NPN mode)
+24V	Digital control signal common (Source)	+24V ± 5% 200 mA
COM	Digital control signal common (Sink)	Common for multi-function input terminals
FWD	Forward-Stop command	FWD-DCM: ON➔ forward running OFF➔ deceleration to stop
REV	Reverse-Stop command	REV-DCM: ON➔ reverse running OFF➔ deceleration to stop

Terminals	Terminal Function	Factory Setting (NPN mode)
MI1 – MI8	Multi-function input 1–8	Refer to Pr.02-01–02-08 to program the multi-function inputs MI1–MI8. Source mode ON: activation current 3.3 mA ≥ 11 V_{DC} OFF: cut-off voltage ≤ 5 V_{DC} Sink Mode ON: activation current 3.3 mA ≤ 13 V_{DC} OFF: cut-off voltage ≥ 19 V_{DC}
DFM	Digital frequency signal output 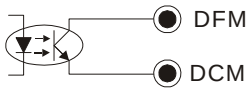 Figure 6-15	DFM uses pulse voltage as an output monitoring signal; Duty-cycle: 50 % Min. load impedance: 1 kΩ / 100 pF Max. current endurance: 30 mA Max. voltage: 30 V_{DC}
DCM	Digital control / Frequency signal common	
MO1	Multi-function output 1 (photocoupler)	The AC motor drive outputs various monitoring signals, such as drive in operation, frequency reached, and overload indication through a transistor (open collector). 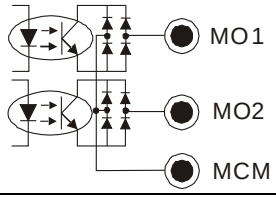 Figure 6-16
MO2	Multi-function output 2 (photocoupler)	
MCM	Multi-function output common	Max 48 V_{DC} 50 mA
RA1	Multi-function relay output 1 (N.O.) a	Resistive Load 3A (N.O.) / 3A (N.C.) 250 V_{AC} 5A (N.O.) / 3A (N.C.) 30 V_{DC} Inductive Load (COS 0.4) 1.2A (N.O.) / 1.2A (N.C.) 250 V_{AC} 2.0A (N.O.) / 1.2A (N.C.) 30 V_{DC} To output different kinds of monitoring signals such as motor drive in operation, frequency reached, and overload indication.
RB1	Multi-function relay output 1 (N.C.) b	
RC1	Multi-function relay common	
RA2	Multi-function relay output 2 (N.O.) a	
RB2	Multi-function relay output 2 (N.C.) b	
RC2	Multi-function relay common	
+10V	Potentiometer power supply	Power supply for analog frequency setting: +10V_{DC} 20 mA
-10V	Potentiometer power supply	Power supply for analog frequency setting: -10V_{DC} 20 mA
AVI	Analog voltage frequency command 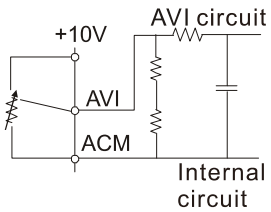 Figure 6-17	Impedance: 20 kΩ Range: 0–20 mA / 4–20 mA / 0–10 V = 0–Max. Operation Frequency (Pr.01-00) AVI switch, factory setting is 0–10 V

Terminals	Terminal Function	Factory Setting (NPN mode)
ACI	Analog current input 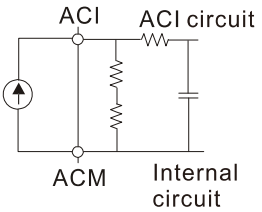 Figure 6-18	Impedance: 250 Ω Range: 0–20mA / 4–20mA / 0–10V = 0–Max. Operation Frequency (Pr.01-00) ACI Switch, factory setting is 4–20 mA
AUI	Auxiliary analog voltage input 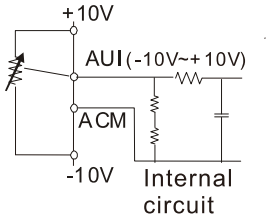 Figure 6-19	Impedance: 20 kΩ Range: -10– +10 V_{DC} = 0–Max. Operation Frequency (Pr. 01-00)
AFM1	Multi-function analog voltage output 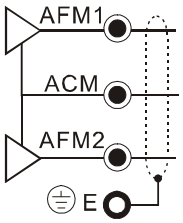 Figure 6-20	0–10V Max. output current 2mA, Max. load 5 kΩ -10–10V maximum output current 2 mA, maximum load 5 kΩ Output current: 2 mA max Resolution: 0–10V corresponds to Max. operation frequency Range: 0–10V → -10– +10V AFM1 Switch, factory setting is 0–10V
AFM2		0–10V Max. output current 2 mA, Max. load 5 kΩ 0–20 mA Max. load 500 Ω Output current: 20 mA max Resolution: 0–10V corresponds to Max. operation frequency Range: 0–10V → 4–20 mA AFM2 Switch, factory setting is 0–10V
ACM	Analog signal common	Analog signal common terminal
STO1	Default setting is shorted Power removal safety function for EN954-1 and IEC/EN61508 When STO1–SCM1; STO2–SCM2 is activated, the activation current is 3.3 mA ≥ 11V_{DC} Note: Refer to Chapter 17 SAFE TORQUE OFF FUNCTION for details.	
SCM1		
STO2		
SCM2		
SG+	Modbus RS-485 Note: Refer to Chapter 12 Descriptions Of Parameter Settings parameter group 09 Communication Parameters for details.	
SG-		
SGND		
RJ45	PIN 1, 2, 7, 8: Reserved PIN 3, 6: SGND PIN 4: SG- PIN 5: SG+	

Table 6-1

* Analog control signal wiring specification: 0.75 mm^2 [18 AWG] with shielded stranded wire

6-3 Remove the Terminal Block

1. Loosen the screws by screwdriver. (As shown in figure below).

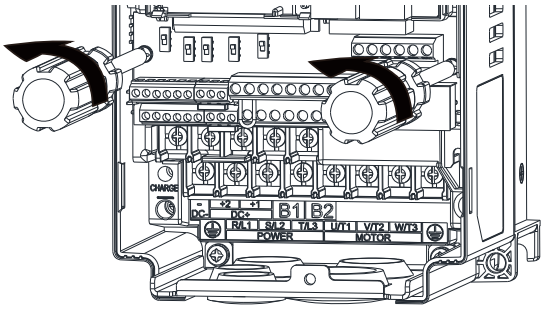

Figure 6-21

2. Remove the control board by pulling it out for a distance 6–8 cm (as 1 in the figure) then lift the control board upward (as 2 in the figure).

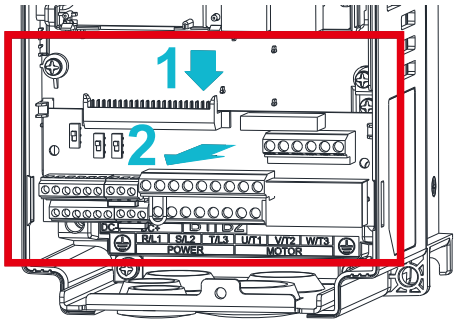

Figure 6-22

[This page intentionally left blank]

Chapter 7 Optional Accessories

7-1 Brake Resistors and Brake Units Used in AC Motor Drives

7-2 Magnetic Contactor / Air Circuit Breaker and Non-fuse Circuit Breaker

7-3 Fuse Specification Chart

7-4 AC / DC Reactor

7-5 Zero Phase Reactors

7-6 EMC Filter

7-7 Panel Mounting (MKC-KPPK)

7-8 Conduit Box Kit

7-9 Fan Kit

7-10 Flange Mounting Kit

7-11 Power Terminal Kit

7-12 USB / RS-485 Communication Interface IFD6530

The optional accessories listed in this chapter are available upon request. Installing additional accessories to your drive can substantially improve the drive's performance. Select accessories according to your needs or contact your local distributor for suggestions.

7-1 Brake Resistors and Brake Units Used in AC Motor Drives

230V

Applicable Motor		125% Braking Torque / 10% ED*1							Max. Braking Torque*2		
HP	kW	Braking Torque [kg-m]	Brake Unit VFDB*4	Brake Resistor for Each Brake Unit*3 P/N	Q'ty	Usage	Resistor Value Spec. for Each AC Motor Drive	Total Braking Current [A]	Min. Resistor Value [Ω]	Max. Total Braking Current [A]	Peak Power [kW]
1	0.7	0.5	-	BR080W200	1	-	80W 200Ω	1.9	63.3	6	2.3
2	1.5	1.0	-	BR200W091	1	-	200W 91Ω	4.2	47.5	8	3.0
3	2.2	1.5	-	BR300W070	1	-	300W 70Ω	5.4	38.0	10	3.8
5	3.7	2.5	-	BR400W040	1	-	400W 40Ω	9.5	19.0	20	7.6
7.5	5.5	3.7	-	BR1K0W020	1	-	1000W 20Ω	19	14.6	26	9.9
10	7.5	5.1	-	BR1K0W020	1	-	1000W 20Ω	19	14.6	26	9.9
15	11	7.5	-	BR1K5W013	1	-	1500W 13Ω	29	12.6	29	10.6
20	15	10.2	-	BR1K0W4P3	2	2 in series	2000W 8.6Ω	44	8.3	46	17.5
25	18	12.2	-	BR1K0W4P3	2	2 in series	2000W 8.6Ω	44	8.3	46	17.5
30	22	14.9	-	BR1K5W3P3	2	2 in series	3000W 6.6Ω	58	5.8	66	25.1
40	30	20.3	2015*2	BR1K0W5P1	2	2 in series	4000W 5.1Ω	75	4.8	80	30.4
50	37	25.1	2022*2	BR1K2W3P9	2	2 in series	4800W 3.9Ω	97	3.2	120	45.6
60	45	30.5	2022*2	BR1K5W3P3	2	2 in series	6000W 3.3Ω	118	3.2	120	45.6
75	55	37.2	2022*3	BR1K2W3P9	2	2 in series	7200W 2.6Ω	145	2.1	180	68.4
100	75	50.8	2022*4	BR1K2W3P9	2	2 in series	9600W 2Ω	190	1.6	240	91.2
125	90	60.9	2022*4	BR1K5W3P3	2	2 in series	12000W 1.65Ω	230	1.6	240	91.2

Table 7-1

460V

Applicable Motor		125% Braking Torque / 10% ED*1							Max. Braking Torque*2		
HP	kW	Braking Torque [kg-m]	Brake Unit VFDB*4	Brake Resistor for Each Brake Unit*3 P/N	Q'ty	Usage	Resistor Value Spec. for Each AC Motor Drive	Total Braking Current [A]	Min. Resistor Value [Ω]	Max. Total Braking Current [A]	Peak Power [kW]
1	0.7	0.5	-	BR080W750	1	-	80W 750Ω	1	190.0	4	3.0
2	1.5	1.0	-	BR200W360	1	-	200W 360Ω	2.1	126.7	6	4.6
3	2.2	1.5	-	BR300W250	1	-	300W 250Ω	3	108.6	7	5.3
5	3.7	2.5	-	BR400W150	1	-	400W 150Ω	5.1	84.4	9	6.8
5.5	4.0	2.7	-	BR1K0W075	1	-	1000W 75Ω	10.2	54.3	14	10.6
7.5	5.5	3.7									
10	7.5	5.1	-	BR1K0W075	1	-	1000W 75Ω	10.2	47.5	16	12.2
15	11	7.5	-	BR1K5W043	1	-	1500W 43Ω	17.6	42.2	18	13.7
20	15	10.2	-	BR1K0W016	2	2 in series	2000W 32Ω	24	26.2	29	22.0
25	18	12.2	-	BR1K0W016	2	2 in series	2000W 32Ω	24	23.0	33	25.1
30	22	14.9	-	BR1K5W013	2	2 in series	3000W 26Ω	29	23.0	33	25.1
40	30	20.3	-	BR1K0W016	4	2 parallel, 2 in series	4000W 16Ω	47.5	14.1	54	41.0
50	37	25.1	4045*1	BR1K2W015	4	2 parallel, 2 in series	4800W 15Ω	50	12.7	60	45.6
60	45	30.5	4045*1	BR1K5W013	4	2 parallel, 2 in series	6000W 13Ω	59	12.7	60	45.6
75	55	37.2	4030*2	BR1K0W5P1	4	4 in series	8000W 10.2Ω	76	9.5	80	60.8
100	75	50.8	4045*2	BR1K2W015	4	2 parallel, 2 in series	9600W 7.5Ω	100	6.3	120	91.2
125	90	60.9	4045*2	BR1K5W013	4	2 parallel, 2 in series	12000W 6.5Ω	117	6.3	120	91.2
150	110	74.5	4110*1	BR1K2W015	10	5 parallel, 2 in series	12000W 6Ω	126	6.0	126	95.8
175	132	89.4	4160*1	BR1K5W012	12	6 parallel, 2 in series	18000W 4Ω	190	4.0	190	144.4
215	160	108.3	4160*1	BR1K5W012	12	6 parallel, 2 series	18000W 4Ω	190	4.0	190	144.4
250	185	125.3	4185*1	BR1K5W012	14	7 parallel, 2 in series	21000W 3.4Ω	225	3.4	225	171.0

Applicable Motor		125% Braking Torque / 10% ED*1							Max. Braking Torque*2		
HP	kW	Braking Torque [kg-m]	Brake Unit VFDB*4	Brake Resistor for Each Brake Unit*3 P/N	Q'ty	Usage	Resistor Value Spec. for Each AC Motor Drive	Total Braking Current [A]	Min. Resistor Value [Ω]	Max. Total Braking Current [A]	Peak Power [kW]
270	200	135.4	4110*2	BR1K2W015	10	5 parallel, 2 in series	24000W 3Ω	252	3	252	191.5
300	220	148.9	4110*2	BR1K2W015	10	5 parallel, 2 in series	24000W 3Ω	252	3.0	252	190.5
340	250	169.3	4160*2	BR1K5W012	12	6 parallel, 2 in series	36000W 2Ω	380	2	380	288.8
375	280	189.6	4160*2	BR1K5W012	12	6 parallel, 2 in series	36000W 2Ω	380	2.0	380	288.8
425	315	213.3	4160*2	BR1K5W012	12	6 parallel, 2 in series	36000W 2Ω	380	2.0	380	288.8
475	355	240.3	4185*2	BR1K5W012	14	7 parallel, 2 in series	42000W 1.7Ω	450	1.7	450	342.0
530	400	270.8	4160*3	BR1K5W012	12	6 parallel, 2 in series	54000W 1.3Ω	540	1.3	540	410.4
600	450	304.7	4185*3	BR1K5W012	12	6 parallel, 2 in series	54000W 1.3Ω	600	1.1	675	513.0
675	500	338.5	4185*3	BR1K5W012	14	7 parallel, 2 in series	63000W 1.1Ω	675	1.1	675	513.0
750	560	379.1	4160*4	BR1K5W012	12	6 parallel, 2 in series	72000W 1.0Ω	760	1.0	760	577.6

Table 7-2

575V

Applicable Motor (kW)			125% Braking Torque / 10%ED*1							Max. Braking Torque*2		
LD	ND	HD	Braking Torque [kg-m]	Brake Unit VFDB*4	Brake Resistor for Each Brake Unit*3 P/N	Q'ty	Usage	Resistor Value Spec. for Each AC Motor Drive	Total Braking Current [A]	Min. Resistor Value [Ω]	Max. Total Braking Current [A]	Peak Power [kW]
1.5	0.75	0.75	0.5	-	BR080W750	1	-	80W 750Ω	1.2	280.0	4	4.5
2.2	1.5	1.5	1	-	BR200W360	1	-	200W 360Ω	2.6	186.7	6	6.7
3.7	2.2	2.2	1.5	-	BR300W400	1	-	300W 400Ω	2.3	160.0	7	7.8
5.5	3.7	3.7	2.5	-	BR500W100	1	-	500W 100Ω	9.2	93.3	12	13.4
7.5	5.5	3.7	3.7	-	BR750W140	1	-	750W 140Ω	6.6	80.0	14	15.7
11	7.5	7.5	5.1	-	BR1K0W075	1	-	1000W 75Ω	12.3	70.0	16	17.9
15	11	7.5	7.4	-	BR1K1W091	1	-	1100W 91Ω	10.1	62.2	18	20.2

Table 7-3

690V

Applicable Motor (kW)			125% Braking Torque / 10%ED*1							Max. Braking Torque*2		
LD	ND	HD	Braking Torque [kg-m]	Brake Unit VFDB*4	Brake Resistor for Each Brake Unit*3 P/N	Q'ty	Usage	Resistor Value Spec. for Each AC Motor Drive	Total Braking Current [A]	Min. Resistor Value [Ω]	Max. Total Braking Current [A]	Peak Power [kW]
18.5	15	11	10.2	-	BR1K0W039	2	2 in series	2000W 78Ω	14.4	58.9	19	21.3
22	18.5	15	12.5	-	BR1K2W033	2	2 in series	2400W 66Ω	17.0	58.9	19	21.3
30	22	18.5	14.9	-	BR1K5W027	2	2 in series	3000W 54Ω	20.7	43.1	26	29.1
37	30	22	20.3	-	BR1K2W015	3	3 in series	3600W 45Ω	24.9	43.1	26	29.1
45	37	30	25	6055*1	BR1K2W033	4	2 in series, 2 parallel	4800W 33Ω	33.9	24.3	46	51.5
55	45	37	30.5	6055*1	BR1K5W027	4	2 in series, 2 parallel	6000W 27Ω	41.5	24.3	46	51.5
75	55	45	37.2	6110*1	BR1K2W033	6	2 in series, 3 parallel	7200W 22Ω	50.9	12.2	92	103.0
90	75	55	50.8	6110*1	BR1K5W027	6	2 in series, 3 parallel	9000W 18Ω	62.2	12.2	92	103.0
110	90	75	60.9	6110*1	BR1K5W027	8	2 in series, 4 parallel	12000W 13.5Ω	83.0	12.2	92	103.0
132	110	90	74.5	6160*1	BR1K2W015	12	3 in series, 4 parallel	14400W 11.3Ω	99.6	8.2	136	152.3

Applicable Motor (kW)			125% Braking Torque / 10%ED*1							Max. Braking Torque*2		
LD	ND	HD	Braking Torque [kg-m]	Brake Unit	Brake Resistor for Each Brake Unit*3			Resistor Value Spec. for Each AC Motor Drive	Total Braking Current [A]	Min. Resistor Value [Ω]	Max. Total Braking Current [A]	Peak Power [kW]
				VFDB*4	P/N	Q'ty	Usage					
160	132	110	89.4	6160*1	BR1K5W027	10	2 in series, 5 parallel	15000W 10.8Ω	103.7	8.2	136	152.3
200	160	132	108.3	6200*1	BR1K5W027	12	2 in series, 6 parallel	18000W 9.0Ω	124.4	6.9	162	181.4
250	200	160	135.4	6110*2	BR1K5W027	8	2 in series, 4 parallel	24000W 6.8Ω	165.9	6.1	184	206.1
315	250	200	169.3	6160*2	BR1K5W027	10	2 in series, 5 parallel	30000W 5.4Ω	207.4	4.1	272	304.6
400	315	250	213.3	6200*2	BR1K5W027	12	2 in series, 6 parallel	36000W 4.5Ω	248.9	3.5	324	362.9
450	355	315	240.3	6200*2	BR1K5W027	14	2 in series, 7 parallel	42000W 3.9Ω	290.4	3.5	324	362.9
560	450	355	304.7	6200*3	BR1K5W027	12	2 in series, 6 parallel	54000W 3.0Ω	373.3	2.3	486	544.3
630	630	630	426.5	6200*4	BR1K5W027	12	2 in series, 6 parallel	72000W 2.3Ω	497.8	1.7	648	725.8

Table 7-4

*1. Calculation of 125% brake toque: (kW) * 125% * 0.8; where 0.8 is the motor efficiency.
Since there is a resistor power consumption limit, the longest operation time for 10% ED is 10 seconds (ON: 10 seconds / OFF: 90 seconds).

*2. Refer to Chapter 7 "Brake Module and Brake Resistors" in the application manual for "Operation Duration & ED" vs. "Braking Current".

*3. To dissipate heat, mount a resistors of 400 W or lower to a frame to keep the surface temperature below 250°C. Fix a resistor of 1000 W or higher to a surface to keep the surface temperature below 350°C. (If the surface temperature is higher than the temperature limit, install extra cooling or increase the size of the resistor.)

*4. The calculation of the brake resistor is based on a four-pole motor (1800 rpm). Refer to VFDB series Braking Module Instruction for more details on brake resistor.

NOTE

1. Specification and Appearance of Brake Resistors

1-1 Wire wound resistors: For 1000 W and above, refer to the following appearance of wire wound resistor (Figure7-1) and its model and specification comparison table (Table 7-5) for details.

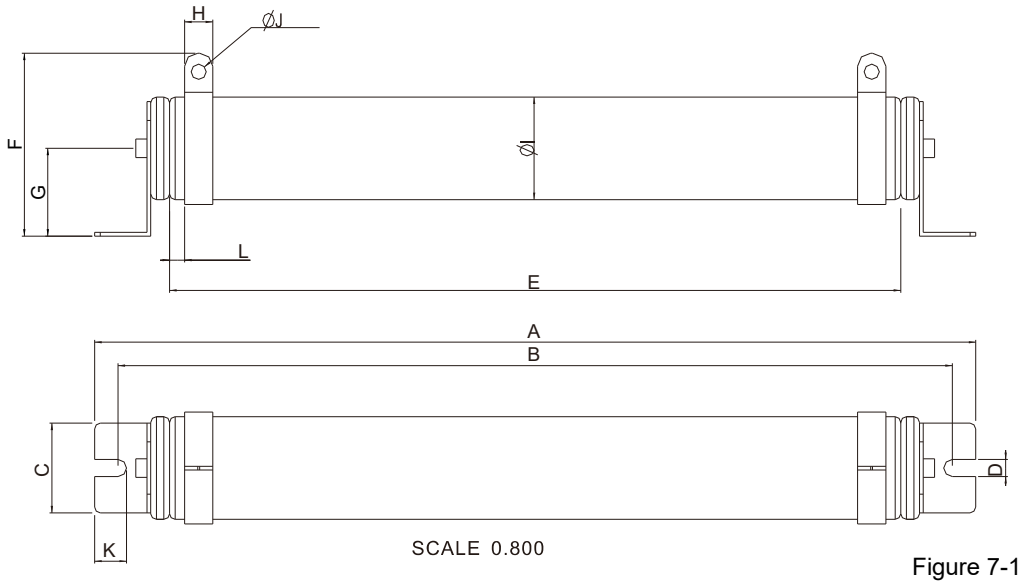

Figure 7-1

Unit: mm

Models and Specifications Comparison Table of Wire Wound Resistors:

UNIT: MM

MODEL	A	B	C	D	E	F	G	H	ØI	ØJ	K	L
BR1K0W4P3	470±10	445±5	48±0.2	9.1±0.1	390±3	98±5	47±5	15±1	55±5	8.1±0.1	21±0.2	8±1
BR1K0W5P1												
BR1K0W016												
BR1K0W020												
BR1K0W075												
BR1K2W3P9												
BR1K2W015												
BR1K5W3P3												
BR1K5W012												
BR1K5W013												
BR1K5W043												

Table 7-5

1-2 Aluminum housed resistors: For below 1000 W, refer to the following appearance of aluminum-housed resistor (Figure 7-2) and its model and specification comparison table (Table 7-6) for details.

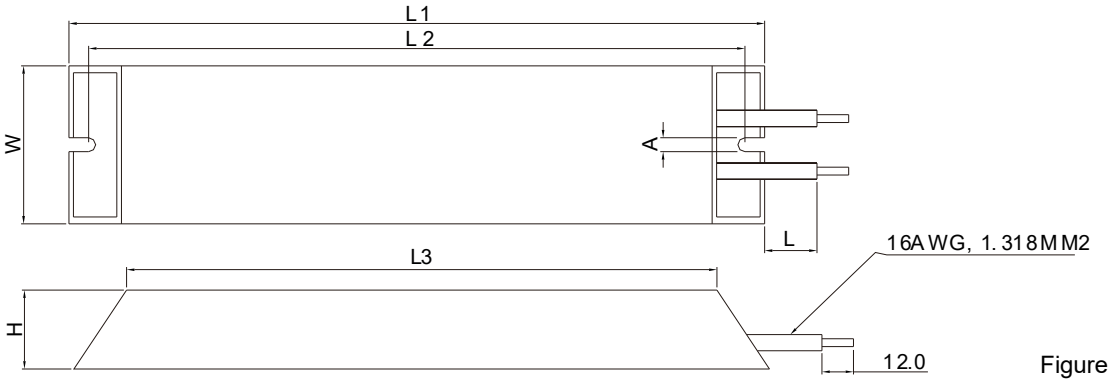

Figure 7-2

Unit: mm

MODEL	L1	L2	L3	W	H	A	L
BR080W200	140±2	125±2	100±1	40±0.5	20±0.5	5.3±0.5	200±20
BR080W750							
BR200W091	165±2	150±2	125±1	60±0.5	30±0.5		
BR200W360							
BR300W070	215±2	200±2	175±1				
BR300W250							
BR400W040	265±2	250±2	225±1				
BR400W150							

Table 7-6

2. Select the resistance value, power and brake usage (ED %) according to Delta rules.

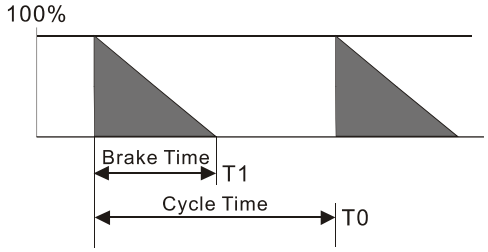

ED% = T1 / T0 x 100(%)

Explanation:
Brake usage ED (%) is the amount of time needed for the brake unit and brake resistor to dissipate heat generated by braking. When the brake resistor heats up, the resistance increases with temperature, and braking torque decreases accordingly.

Figure 7-3

For safety, install a thermal overload relay between the brake unit and the brake resistor in conjunction with the magnetic contactor (MC) at the drive mains input for additional protection. The thermal overload relay protects the brake resistor from overheat damage due to frequent or continuous braking. Under such circumstances, turn off the power to prevent damage to the brake resistor, brake unit and the drive. NOTE: Never use it to disconnect the brake resistor.

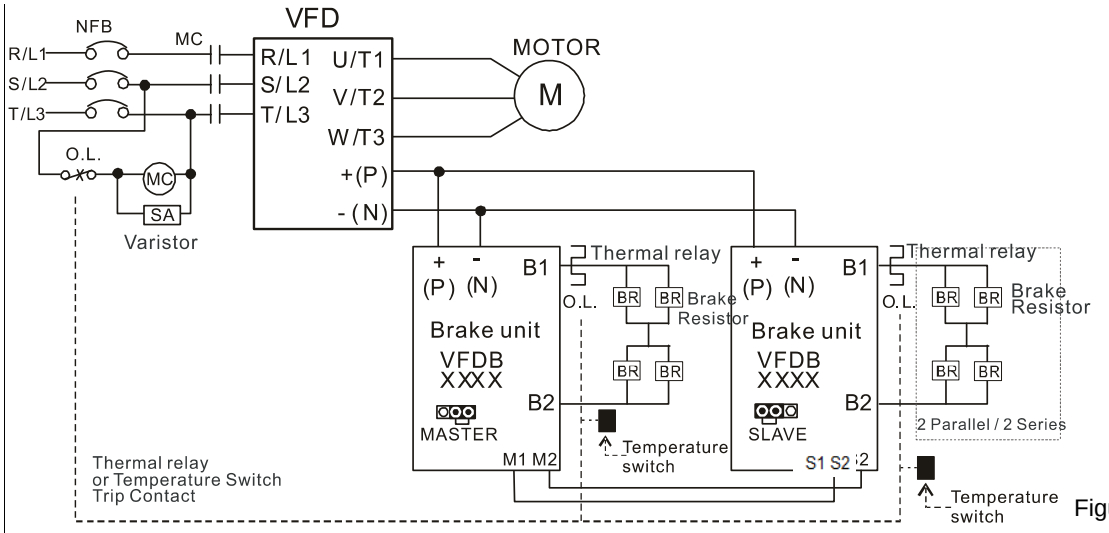

Figure 7-4

- When AC Drive is equipped with a DC reactor, please read user manual for the correct wiring for the brake unit input circuit +(P).
- DO NOT connect input circuit -(N) to the neutral point of the power system.

3. Any damage to the drive or other equipment caused by using brake resistors and brake units that are not provided by Delta voids the warranty.
4. Consider environmental safety factors when installing the brake resistors. If you use the minimum resistance value, consult your local dealers for the power calculation.
5. When using more than two brake units, the equivalent resistor value of the parallel brake unit cannot be less than the value in the column “Min. Resistor Value [Ω]”. Read the wiring information in the brake unit user manual thoroughly prior to operation. Visit the following links to get the instruction sheets for the wiring in the brake unit:
   - VFDB2015 / 2022 / 4030 / 4045 / 5055 Braking Modules Instruction Sheet

     http://www.deltaww.com/filecenter/Products/download/06/060101/Option/DELTA_IA-MDS_VFDB_I_EN_20070719.pdf
   - VFDB4110 / 4160 / 4185 Braking Modules Instruction Sheet

     http://www.deltaww.com/filecenter/Products/download/06/060101/Option/DELTA_IA-MDS_VFDB4110-4160-4185_I_EN_20101011.pdf
   - VFDB6055 / 6110 / 6160 / 6200 Braking Modules Instruction Sheet

     http://www.deltaww.com/filecenter/Products/download/06/060101/Option/DELTA_IA-MDS_VFDB6055-6110-6160-6200_I_TSE_20121030.pdf
6. The selection tables are for normal use. If the AC motor drive requires frequent braking, increase the Watts by two to three times.
7. Thermal Overload Relay (TOR), for 230V / 460V / 690V models:

   Thermal overload relay selection is based on its overload capacity. A standard braking capacity of the C2000 Plus is 10% ED (Tripping time=10 s). As shown in the graph below, a 460V, 110 kW C2000 Plus requires the thermal relay to take 260% overload capacity for 10 seconds (hot starting) and the braking current is 126 A. In this case, select a thermal overload relay rated at 50 A. The specification of each thermal relay may vary among different manufacturers. Carefully read the specification before using it.

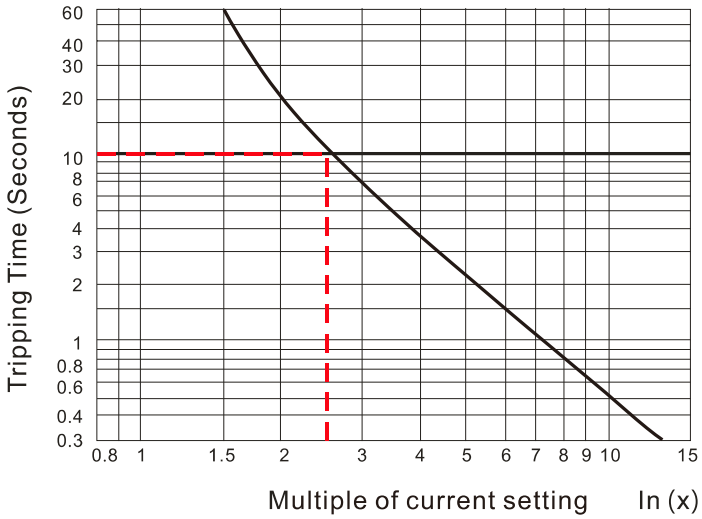
Tripping Time (Seconds)
60
40
30
20
10
8
6
4
3
2
1
0.8
0.6
0.4
0.3
0.8
1
1.5
2
3
4
5
6
7
8
9
10
15
Multiple of current setting
In (x)

Figure 7-5

7-2 Magnetic Contactor / Air Circuit Breaker and Non-fuse Circuit Breaker

Magnetic Contactor (MC) and Air Circuit Breaker (ACB)

It is recommended the surrounding temperature for MC should be ≥ 60°C and that for ACB should be ≥ 50°C. In the meanwhile, consider temperature derating for components with ON/OFF switch in accordance with the ambient temperature of the on-site distribution panel.

230V Model

Frame	Model	Heavy Duty Output Current [A]	Heavy Duty Input Current [A]	MC/ACB Selection [A]
A	VFD007C23A-21	5	6.4	11
	VFD015C23A-21	8	12	22
	VFD022C23A-21	11	16	32
	VFD037C23A-21	17	20	32
B	VFD055C23A-21	25	28	55
	VFD075C23A-21	33	36	65
	VFD110C23A-21	49	52	85
C	VFD150C23A-21	65	72	130
	VFD185C23A-21	75	83	150
	VFD220C23A-21	90	99	150
D	VFD300C23A-00 VFD300C23A-21	120	124	185
	VFD370C23A-00 VFD370C23A-21	146	143	225
E	VFD450C23A-00 VFD450C23A-21	180	171	265
	VFD550C23A-00 VFD550C23A-21	215	206	330
	VFD750C23A-00 VFD750C23A-21	255	245	400
F	VFD900C23A-00 VFD900C23A-21	346	331	500

Table 7-7

460V Model

Frame	Model	Heavy Duty Output Current [A]	Heavy Duty Input Current [A]	MC/ACB Selection [A]
A	VFD007C43A-21	3	4.3	7
	VFD015C43A-21	4	5.9	9
	VFD022C43A-21	6	8.7	18
	VFD037C43A-21	9	14	22
	VFD040C43A-21	10.5	15.5	32
	VFD055C43A-21	12	17	32
B	VFD075C43A-21	18	20	32
	VFD110C43A-21	24	26	40
	VFD150C43A-21	32	35	55

Frame	Model	Heavy Duty Output Current [A]	Heavy Duty Input Current [A]	MC/ACB Selection [A]
C	VFD185C43A-21	38	40	65
	VFD220C43A-21	45	47	75
	VFD300C43A-21	60	63	105
D0	VFD370C43S-00 VFD370C43S-21	73	74	130
	VFD450C43S-00 VFD450C43S-21	91	101	185
D	VFD550C43A-00 VFD550C43A-21	110	114	185
	VFD750C43A-00 VFD750C43A-21	150	157	265
E	VFD900C43A-00 VFD900C43A-21	180	167	265
	VFD1100C43A-00 VFD1100C43A-21	220	207	330
F	VFD1320C43A-00 VFD1320C43A-21	260	240	400
	VFD1600C43A-00 VFD1600C43A-21	310	300	500
G	VFD1850C43A-00 VFD1850C43A-21	370	380	630
	VFD2000C43A-00 VFD2000C43A-21	395	395	630
	VFD2200C43A-00 VFD2200C43A-21	460	400	630
	VFD2500C43A-00 VFD2500C43A-21	481	447	800
H	VFD2800C43A-00 VFD2800C43C-21	550	494	800
	VFD3150C43A-00 VFD3150C43C-21	616	555	800
	VFD3550C43A-00 VFD3550C43C-21	683	625	1000
	VFD4000C43A-00 VFD4000C43C-21	770	770	1250
	VFD4500C43A-00 VFD4500C43C-21	866	866	1600
	VFD5000C43A-00 VFD5000C43C-21	930	930	1600
	VFD5600C43A-00 VFD5600C43C-21	1094	1094	2000

Table 7-8

575V Model

Frame	Model	Light Duty Output Current [A]	Light Duty Input Current [A]	MC/ACB Selection [A]
A	VFD015C53A-21	3	3.8	9
	VFD022C53A-21	4.3	5.4	12
	VFD037C53A-21	6.7	10.4	18
B	VFD055C53A-21	9.9	14.9	32
	VFD075C53A-21	12.1	16.9	32
	VFD110C53A-21	18.7	21.3	40
	VFD150C53A-21	24.2	26.3	50

Table 7-9

690V Model

Frame	Model	Light Duty Output Current [A]	Light Duty Input Current [A]	MC/ACB Selection [A]
C	VFD185C63B-21	24	29	50
	VFD220C63B-21	30	36	65
	VFD300C63B-21	36	43	75
	VFD370C63B-21	45	54	100
D	VFD450C63B-00 VFD450C63B-21	54	65	130
	VFD550C63B-00 VFD550C63B-21	67	81	150
E	VFD750C63B-00 VFD750C63B-21	86	84	150
	VFD900C63B-00 VFD900C63B-21	104	102	185
	VFD1100C63B-00 VFD1100C63B-21	125	122	225
	VFD1320C63B-00 VFD1320C63B-21	150	147	265
F	VFD1600C63B-00 VFD1600C63B-21	180	178	330
	VFD2000C63B-00 VFD2000C63B-21	220	217	400
G	VFD2500C63B-00 VFD2500C63B-21	290	292	630
	VFD3150C63B-00 VFD3150C63B-21	350	353	630
H	VFD4000C63B-00 VFD4000C63B-21	430	454	800
	VFD4500C63B-00 VFD4500C63B-21	465	469	800
	VFD5600C63B-00 VFD5600C63B-21	590	595	1000
	VFD6300C63B-00 VFD6300C63B-21	675	681	1250

Table 7-10

Non-fuse Circuit Breaker

Comply with the UL standard: Per UL 508, paragraph 45.8.4, part a.

The rated current of the non-fuse circuit breaker should be 1.6–2.6 times (575V / 690V models: 2–4 times) the drive's rated input current.

230V / Three-phase	
Model	Breaker Rated Input Recommended Current [A]
VFD007C23A-21	15
VFD015C23A-21	20
VFD022C23A-21	30
VFD037C23A-21	40
VFD055C23A-21	50
VFD075C23A-21	70
VFD110C23A-21	110
VFD150C23A-21	125
VFD185C23A-21	150
VFD220C23A-21	200
VFD300C23A-00 / VFD300C23A-21	250
VFD370C23A-00 / VFD370C23A-21	300
VFD450C23A-00 / VFD450C23A-21	350
VFD550C23A-00 / VFD550C23A-21	400
VFD750C23A-00 / VFD750C23A-21	500
VFD900C23A-00 / VFD900C23A-21	600

Table 7-11

460V / Three-phase	
Model	Breaker Rated Input Recommended Current [A]
VFD007C43A-21 / VFD007C4EA-21	10
VFD015C43A-21 / VFD015C4EA-21	10
VFD022C43A-21 / VFD022C4EA-21	15
VFD037C43A-21 / VFD037C4EA-21	20
VFD040C43A-21 / VFD040C4EA-21	20
VFD055C43A-21 / VFD055C4EA-21	40
VFD075C43A-21 / VFD075C4EA-21	40
VFD110C43A-21 / VFD110C4EA-21	50
VFD150C43A-21 / VFD150C4EA-21	70
VFD185C43A-21 / VFD185C4EA-21	80
VFD220C43A-21 / VFD220C4EA-21	100
VFD300C43A-21 / VFD300C4EA-21	125
VFD370C43S-00 / VFD370C43S-21	150
VFD450C43S-00 / VFD450C43S-21	175
VFD550C43A-00 / VFD550C43A-21	250
VFD750C43A-00 / VFD750C43A-21	300
VFD900C43A-00 / VFD900C43A-21	350
VFD1100C43A-00 / VFD1100C43A-21	400
VFD1320C43A-00 / VFD1320C43A-21	500
VFD1600C43A-00 / VFD1600C43A-21	600
VFD1850C43A-00 / VFD1850C43A-21	600
VFD2000C43A-00 / VFD2000C43A-21	800
VFD2200C43A-00 / VFD2200C43A-21	800
VFD2500C43A-00 / VFD2500C43A-21	1000
VFD2800C43A-00 / VFD2800C43C-21	1000
VFD3150C43A-00 / VFD3150C43C-21	1200
VFD3550C43A-00 / VFD3550C43C-21	1350
VFD4000C43A-00 / VFD4000C43C-21	1500
VFD4500C43A-00 / VFD4500C43C-21	1600
VFD5000C43A-00 / VFD5000C43C-21	2000
VFD5600C43A-00 / VFD5600C43C-21	2000

Table 7-12

575V / Three-phase	
Model	Breaker Rated Input Recommended Current [A]
VFD015C53A-21	5
VFD022C53A-21	10
VFD037C53A-21	15
VFD055C53A-21	20
VFD075C53A-21	25
VFD110C53A-21	40
VFD150C53A-21	50

Table 7-13

690V / Three-phase	
Model	Breaker Rated Input Recommended Current [A]
VFD185C63B-21	50
VFD220C63B-21	60
VFD300C63B-21	60
VFD370C63B-21	80
VFD450C63B-00 / VFD450C63B-21	100
VFD550C63B-00 / VFD550C63B-21	125
VFD750C63B-00 / VFD750C63B-21	150
VFD900C63B-00 / VFD900C63B-21	200
VFD1100C63B-00 / FD1100C63B-21	225
VFD1320C63B-00 / FD1320C63B-21	300
VFD1600C63B-00 / FD1600C63B-21	350
VFD2000C63B-00 / FD2000C63B-21	400
VFD2500C63B-00 / FD2500C63B-21	500
VFD3150C63B-00 / FD3150C63B-21	650
VFD4000C63B-00 / FD4000C63B-21	800
VFD4500C63B-00 / FD4500C63B-21	850
VFD5600C63B-00 / FD5600C63B-21	1200
VFD6300C63B-00 / FD6300C63B-21	1400

Table 7-14

7-3 Fuse Specification Chart

☑ Fuse specifications lower than the table below are allowed.

☑ For installation in the United States, branch circuit protection must be provided in accordance with the National Electrical Code (NEC) and any applicable local codes. Use UL classified fuses to fulfill this requirement.

☑ For installation in Canada, branch circuit protection must be provided in accordance with Canadian Electrical Code and any applicable provincial codes. Use UL classified fuses to fulfill this requirement.

230V Model	Input Current I [A]		Line Fuse	
	Super Heavy Duty	Heavy Duty	I [A]	Bussmann P/N
VFD007C23A-21	3.9	6.4	15	JJN-15 / JJS-15
VFD015C23A-21	6.4	12	25	JJN-25 / JJS-25
VFD022C23A-21	12	16	35	JJN-35 / JJS-35
VFD037C23A-21	16	20	45	JJN-45 / JJS-45
VFD055C23A-21	20	28	60	JJN-60 / JJS-60
VFD075C23A-21	28	36	80	JJN-80 / JJS-80
VFD110C23A-21	36	52	110	JJN-110 / JJS-110
VFD150C23A-21	52	72	150	JJN-150 / JJS-150
VFD185C23A-21	72	83	175	JJN-175 / JJS-175
VFD220C23A-21	83	99	225	JJN-225 / JJS-225
VFD300C23A-00 VFD300C23A-21	99	124	250	JJN-250 / JJS-250
VFD370C23A-00 VFD370C23A-21	124	143	300	JJN-300 / JJS-300
VFD450C23A-00 VFD450C23A-21	143	171	400	JJN-400 / JJS-400
VFD550C23A-00 VFD550C23A-21	171	206	450	JJN-450 / JJS-450
VFD750C23A-00 VFD750C23A-21	206	245	500	JJN-500 / JJS-500
VFD900C23A-00 VFD900C23A-21	245	331	700	JJN-700 / JJS-700

Table 7-15

460V Model	Input Current I [A]		Line Fuse	
	Super Heavy Duty	Heavy Duty	I [A]	Bussmann P/N
VFD007C43A-21 VFD007C4EA-21	3.5	4.3	10	JJS-10
VFD015C43A-21 VFD015C4EA -21	4.3	5.9	15	JJS-15
VFD022C43A-21 VFD022C4EA-21	5.9	8.7	20	JJS-20
VFD037C43A-21 VFD037C4EA-21	8.7	14	30	JJS-30
VFD040C43A-21 VFD040C4EA-21	14	15.5	35	JJS-35
VFD055C43A-21 VFD055C4EA-21	15.5	17	40	JJS-40
VFD075C43A-21 VFD075C4EA-21	17	20	45	JJS-45

460V Model	Input Current I [A]		Line Fuse	
	Super Heavy Duty	Heavy Duty	I [A]	Bussmann P/N
VFD110C43A-21 VFD110C4EA-21	20	26	60	JJS-60
VFD150C43A-21 VFD150C4EA-21	26	35	80	JJS-80
VFD185C43A-21 VFD185C4EA-21	35	40	90	JJS-90
VFD220C43A-21 VFD220C4EA-21	40	47	110	JJS-110
VFD300C43A-21 VFD300C4EA-21	47	63	150	JJS-150
VFD370C43S-00 VFD370C43S-21	63	74	175	JJS-175
VFD450C43S-00 VFD450C43S-21	74	101	225	JJS-225
VFD550C43A-00 VFD550C43A-21	101	114	250	JJS-250
VFD750C43A-00 VFD750C43A-21	114	157	350	JJS-350
VFD900C43A-00 VFD900C43A-21	157	167	350	JJN-350
VFD1100C43A-00 VFD1100C43A-21	167	207	450	JJS-450
VFD1320C43A-00 VFD1320C43A-21	207	240	500	JJS-500
VFD1600C43A-00 VFD1600C43A-21	240	300	700	KTU-700
VFD1850C43A-00 VFD1850C43A-21	300	380	800	KTU-800
VFD2000C43A-00 VFD2000C43A-21	300	395	800	KTU-800
VFD2200C43A-00 VFD2200C43A-21	380	400	800	KTU-800
VFD2500C43A-00 VFD2500C43A-21	390	447	1000	KTU-1000
VFD2800C43A-00 VFD2800C43C-21	400	494	1000	KTU-1000
VFD3150C43A-00 VFD3150C43C-21	494	555	1200	KTU-1200
VFD3550C43A-00 VFD3550C43C-21	555	625	1400	KTU-1400
VFD4000C43A-00 VFD4000C43C-21	590	770	1400	KTU-1400
VFD4500C43A-00 VFD4500C43C-21	625	866	1600	170M6019
VFD5000C43A-00 VFD5000C43C-21	866	930	1800	170M6020
VFD5600C43A-00 VFD5600C43C-21	930	1094	2000	170M6021

Table 7-16

575V Model	Input Current I [A]			Line Fuse		
	Light Duty	Normal Duty	Heavy Duty	I [A]	Model No.	Supplier
VFD015C53A-21	3.8	3.1	2.6	7	KLKD007.T	Littelfuse
VFD022C53A-21	5.4	4.5	3.8	10	KLKD010.T	Littelfuse
VFD037C53A-21	10.4	7.2	5.8	15	KLKD015.T	Littelfuse
VFD055C53A-21	14.9	12.3	10.7	25	25ET	Bussmann
VFD075C53A-21	16.9	15	12.5	32	32ET	Bussmann
VFD110C53A-21	21.3	18	16.9	50	50FE	Bussmann
VFD150C53A-21	26.3	22.8	19.7	63	63FE	Bussmann

Table 7-17

690V Model	Input Current I [A]			Line Fuse	
	Light Duty	Normal Duty	Heavy Duty	I [A]	Bussmann P/N
VFD185C63B-21	29	24	20	60	JJS-60
VFD220C63B-21	36	29	24	70	JJS-70
VFD300C63B-21	43	36	29	80	JJS-80
VFD370C63B-21	54	43	36	100	JJS-100
VFD450C63B-00 VFD450C63B-21	54	45	36	100	JJS-100
VFD550C63B-00 VFD550C63B-21	67	54	45	125	JJS-125
VFD750C63B-00 VFD750C63B-21	84	66	53	175	JJS-175
VFD900C63B-00 VFD900C63B-21	102	84	66	200	JJS-200
VFD1100C63B-00 VFD1100C63B-21	122	102	84	250	JJS-250
VFD1320C63B-00 VFD1320C63B-21	147	122	102	300	JJS-300
VFD1600C63B-00 VFD1600C63B-21	178	148	123	350	JJS-350
VFD2000C63B-00 VFD2000C63B-21	217	178	148	400	JJS-400
VFD2500C63B-00 VFD2500C63B-21	292	222	181	450	170M4063
VFD3150C63B-00 VFD3150C63B-21	353	292	222	500	170M6058
VFD4000C63B-00 VFD4000C63B-21	454	353	292	700	170M6061
VFD4500C63B-00 VFD4500C63B-21	469	388	313	800	170M6062
VFD5600C63B-00 VFD5600C63B-21	595	504	423	1250	170M6066
VFD6300C63B-00 VFD6300C63B-21	681	681	681	1400	170M6067

Table 7-18

7-4 AC / DC Reactor

AC Input Reactor

Installing an AC reactor on the input side of an AC motor drive can increase line impedance, improve the power factor, reduce input current, increase system capacity, and reduce interference generated from the motor drive. It also reduces momentary voltage surges or abnormal current spikes from the mains power, further protecting the drive. For example, when the main power capacity is higher than 500 kVA, or when using a phase-compensation capacitor, momentary voltage and current spikes may damage the AC motor drive's internal circuit. An AC reactor on the input side of the AC motor drive protects it by suppressing surges.

Installation

Install an AC input reactor in series between the main power and the three input phases R S T, as shown in the figure below:

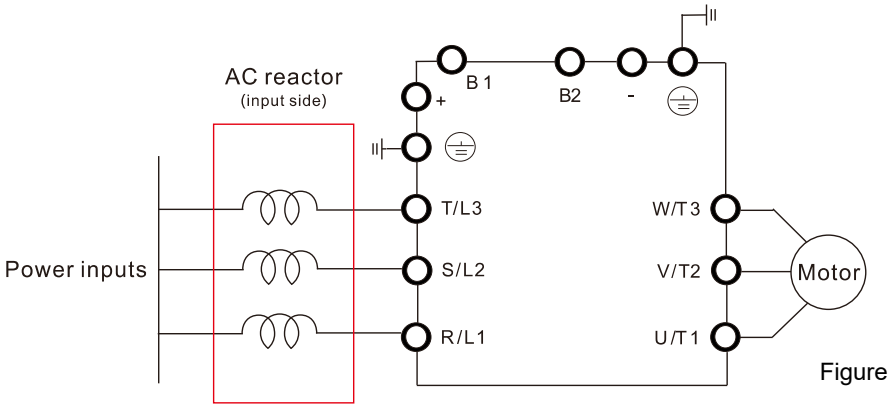

Figure 7-6

Wiring of AC input reactor

Applicable Reactors

200V–230V, 50/60 Hz / Heavy Duty

Model	HP	Rated Current [Arms]	Saturation current [Arms]	3% impedance [mH]	5% impedance [mH]	Built-in DC reactor	Input AC reactor Delta part #	Heat Dissipation (W)
VFD007C23A-21	1	5	9	2.536	4.227	No	DR005A0254	21
VFD015C23A-21	2	8	14.4	1.585	2.642	No	DR008A0159	37
VFD022C23A-21	3	11	19.8	1.152	1.922	No	DR011A0115	38
VFD037C23A-21	5	17	30.6	0.746	1.243	No	DR017AP746	40
VFD055C23A-21	7.5	25	45	0.507	0.845	No	DR025AP507	61
VFD075C23A-21	10	33	59.4	0.32	0.534	No	DR033AP320	60
VFD110C23A-21	15	49	88.2	0.216	0.359	No	DR049AP215	70
VFD150C23A-21	20	65	117	0.163	0.271	No	DR065AP162	83
VFD185C23A-21	25	75	135	0.169	0.282	No	DR075AP170	150
VFD220C23A-21	30	90	162	0.141	0.235	No	DR090AP141	120
VFD300C23A-00 VFD300C23A-21	40	120	216	0.106	0.176	Yes	DR146AP087	110
VFD370C23A-00 VFD370C23A-21	50	146	262.8	0.087	0.145	Yes	DR146AP087	110
VFD450C23A-00 VFD450C23A-21	60	180	324	0.070	0.117	Yes	DR180AP070	120
VFD550C23A-00 VFD550C23A-21	75	215	387	0.059	0.098	Yes	DR215AP059	150

Model	HP	Rated Current [Arms]	Saturation current [Arms]	3% impedance [mH]	5% impedance [mH]	Built-in DC reactor	Input AC reactor Delta part #	Heat Dissipation (W)
VFD750C23A-00 VFD750C23A-21	100	255	459	0.049	0.083	Yes	DR276AP049	200
VFD900C23A-00 VFD900C23A-21	125	346	622.8	0.037	0.061	Yes	DR346AP037	240

Table 7-19

200V–230V, 50/60 Hz / Super Heavy Duty

Model	HP	Rated Current [Arms]	Saturation current [Arms]	3% impedance [mH]	5% impedance [mH]	Built-in DC reactor	Input AC reactor Delta part #	Heat Dissipation (W)
VFD007C23A-21	1	3	6	4.227	7.045	No	N/A	N/A
VFD015C23A-21	2	5	10	2.536	4.227	No	DR005A0254	21
VFD022C23A-21	3	8	16	1.585	2.642	No	DR008A0159	37
VFD037C23A-21	5	11	22	1.152	1.922	No	DR011A0115	38
VFD055C23A-21	7.5	17	34	0.746	1.243	No	DR017AP746	40
VFD075C23A-21	10	25	50	0.507	0.845	No	DR025AP507	61
VFD110C23A-21	15	33	66	0.32	0.534	No	DR033AP320	60
VFD150C23A-21	20	49	98	0.216	0.359	No	DR049AP215	70
VFD185C23A-21	25	65	130	0.163	0.271	No	DR065AP162	83
VFD220C23A-21	30	75	150	0.169	0.282	No	DR075AP170	150
VFD300C23A-00 VFD300C23A-21	40	90	180	0.141	0.235	Yes	DR090AP141	120
VFD370C23A-00 VFD370C23A-21	50	120	240	0.106	0.176	Yes	DR146AP087	110
VFD450C23A-00 VFD450C23A-21	60	146	292	0.087	0.145	Yes	DR146AP087	110
VFD550C23A-00 VFD550C23A-21	75	180	360	0.07	0.117	Yes	DR180AP070	120
VFD750C23A-00 VFD750C23A-21	100	215	430	0.059	0.098	Yes	DR215AP059	150
VFD900C23A-00 VFD900C23A-21	125	255	510	0.049	0.083	Yes	DR276AP049	200

Table 7-20

380V–460V, 50/60 Hz / Heavy Duty

Model	HP	Rated Current [Arms]	Saturation current [Arms]	3% impedance [mH]	5% impedance [mH]	Built-in DC reactor	Input AC reactor Delta part #	Heat Dissipation (W)
VFD007C43A-21	1	3	5.4	8.102	13.502	No	DR003A0810	20
VFD015C43A-21	2	4	7.2	6.077	10.127	No	DR004A0607	21
VFD022C43A-21	3	6	10.8	4.050	6.752	No	DR006A0405	31
VFD037C43A-21	5	9	16.2	2.700	4.501	No	DR009A0270	40
VFD040C43A-21	5	10.5	18.9	2.315	3.858	No	DR010A0231	50
VFD055C43A-21	7.5	12	21.6	2.025	3.375	No	DR012A0202	50
VFD075C43A-21	10	18	32.4	1.174	1.957	No	DR018A0117	54
VFD110C43A-21	15	24	43.2	0.881	1.468	No	DR024AP881	60
VFD150C43A-21	20	32	57.6	0.66	1.101	No	DR032AP660	80
VFD185C43A-21	25	38	68.4	0.639	1.066	No	DR038AP639	85
VFD220C43A-21	30	45	81	0.541	0.900	No	DR045AP541	95
VFD300C43A-21	40	60	108	0.405	0.675	No	DR060AP405	100
VFD370C43S-00 VFD370C43S-21	50	73	131.4	0.334	0.555	Yes	DR073AP334	115

Model	HP	Rated Current [Arms]	Saturation current [Arms]	3% impedance [mH]	5% impedance [mH]	Built-in DC reactor	Input AC reactor Delta part #	Heat Dissipation (W)
VFD450C43S-00 VFD450C43S-21	60	91	163.8	0.267	0.445	Yes	DR091AP267	130
VFD550C43A-00 VFD550C43A-21	75	110	198	0.221	0.368	Yes	DR110AP221	150
VFD750C43A-00 VFD750C43A-21	100	150	270	0.162	0.270	Yes	DR150AP162	170
VFD900C43A-00 VFD900C43A-21	125	180	324	0.135	0.225	Yes	DR180AP135	190
VFD1100C43A-00 VFD1100C43A-21	150	220	396	0.110	0.184	Yes	DR220AP110	230
VFD1320C43A-00 VFD1320C43A-21	175	260	468	0.098	0.162	Yes	DR260AP098	280
VFD1600C43A-00 VFD1600C43A-21	215	310	558	0.078	0.131	Yes	DR310AP078	300
VFD1850C43A-00 VFD1850C43A-21	250	370	666	0.066	0.109	Yes	DR370AP066	340
VFD2000C43A-00 VFD2000C43A-21	270	395	474	0.061	0.1	Yes	DR460AP054 *1	400
VFD2200C43A-00 VFD2200C43A-21	300	460	828	0.054	0.090	Yes	DR460AP054	400
VFD2500C43A-00 VFD2500C43A-21	340	481	578	0.052	0.086	Yes	DR550AP044 *1	430
VFD2800C43A-00 VFD2800C43C-21	375	550	990	0.044	0.074	Yes	DR550AP044	430
VFD3150C43A-00 VFD3150C43C-21	420	616	1108.8	0.039	0.066	Yes	DR616AP039	450
VFD3550C43A-00 VFD3550C43C-21	475	683	1229.4	0.036	0.060	Yes	DR683AP036	480
VFD4000C43A-00 VFD4000C43A-21	530	770	924	0.028	0.047	Yes	DR866AP028	610
VFD4500C43A-00 VFD4500C43C-21	600	866	1558.8	0.028	0.047	Yes	DR866AP028	610
VFD5000C43A-00 VFD5000C43C-21	650	930	1674	0.026	0.044	Yes	N/A	N/A
VFD5600C43A-00 VFD5600C43C-21	750	1094	1969.2	0.022	0.037	Yes	N/A	N/A
*1: The inductance value for the above applications of Delta's reactors will be close to, but less than 3%.								

Table 7-21

380V–460V, 50/60 Hz / Super Heavy Duty

Model	HP	Rated Current [Arms]	Saturation current [Arms]	3% impedance [mH]	5% impedance [mH]	Built-in DC reactor	Input AC reactor Delta part #	Heat Dissipation (W)
VFD007C43A-21	1	1.7	3.4	14.298	23.827	No	N/A	N/A
VFD015C43A-21	2	3	6	8.102	13.502	No	DR003A0810	20
VFD022C43A-21	3	4	8	6.077	10.127	No	DR004A0607	21
VFD037C43A-21	5	6	12	4.05	6.752	No	DR006A0405	31
VFD040C43A-21	5	9	18	2.7	4.501	No	DR009A0270	40
VFD055C43A-21	7.5	10.5	21	2.315	3.858	No	DR010A0231	50
VFD075C43A-21	10	12	24	2.025	3.375	No	DR012A0202	50
VFD110C43A-21	15	18	36	1.174	1.957	No	DR018A0117	54
VFD150C43A-21	20	24	48	0.881	1.468	No	DR024AP881	60
VFD185C43A-21	25	32	64	0.66	1.101	No	DR032AP660	80
VFD220C43A-21	30	38	76	0.639	1.066	No	DR038AP639	85
VFD300C43A-21	40	45	90	0.541	0.9	No	DR045AP541	95
VFD370C43S-00 VFD370C43S-21	50	60	120	0.405	0.675	Yes	DR060AP405	100
VFD450C43S-00 VFD450C43S-21	60	73	146	0.334	0.555	Yes	DR073AP334	115
VFD550C43A-00 VFD550C43A-21	75	91	182	0.267	0.445	Yes	DR091AP267	130

Model	HP	Rated Current [Arms]	Saturation current [Arms]	3% impedance [mH]	5% impedance [mH]	Built-in DC reactor	Input AC reactor Delta part #	Heat Dissipation (W)
VFD750C43A-00 VFD750C43A-21	100	110	220	0.221	0.368	Yes	DR110AP221	150
VFD900C43A-00 VFD900C43A-21	125	150	300	0.162	0.27	Yes	DR150AP162	170
VFD1100C43A-00 VFD1100C43A-21	150	180	360	0.135	0.225	Yes	DR180AP135	190
VFD1320C43A-00 VFD1320C43A-21	175	220	440	0.11	0.184	Yes	DR220AP110	230
VFD1600C43A-00 VFD1600C43A-21	215	260	520	0.098	0.162	Yes	DR260AP098	280
VFD1850C43A-00 VFD1850C43A-21	250	310	620	0.078	0.131	Yes	DR310AP078	300
VFD2000C43A-00 VFD2000C43A-21	270	335	536	0.072	0.12	Yes	DR370AP066 *1	340
VFD2200C43A-00 VFD2200C43A-21	300	370	740	0.066	0.109	Yes	DR370AP066	340
VFD2500C43A-00 VFD2500C43A-21	340	415	664	0.058	0.10	Yes	DR460AP054 *1	400
VFD2800C43A-00 VFD2800C43C-21	375	460	920	0.054	0.09	Yes	DR460AP054	400
VFD3150C43A-00 VFD3150C43C-21	420	550	1100	0.044	0.074	Yes	DR550AP044	430
VFD3550C43A-00 VFD3550C43C-21	475	616	1232	0.039	0.066	Yes	DR616AP039	450
VFD4000C43A-00 VFD4000C43A-21	530	683	1092.8	0.036	0.06	Yes	DR683AP036	480
VFD4500C43A-00 VFD4500C43C-21	600	683	1366	0.036	0.06	Yes	DR683AP036	480
VFD5000C43A-00 VFD5000C43C-21	650	866	1732	0.028	0.047	Yes	DR866AP028	610
VFD5600C43A-00 VFD5600C43C-21	750	930	1860	0.026	0.044	Yes	N/A	N/A
*1: The inductance value for the above applications of Delta's reactors will be close to, but less than 3%.								

Table 7-22

575V, 50/60 Hz, Three-phase

kW	HP	Rated current [Arms]			Saturation Current [Arms]	3% impedance [mH]			5% impedance [mH]		
		Light Duty	Normal Duty	Heavy Duty		Light Duty	Normal Duty	Heavy Duty	Light Duty	Normal Duty	Heavy Duty
VFD015C53A-21	2	3	2.5	2.1	4.2	8.806	10.567	12.580	14.677	17.612	20.967
VFD022C53A-21	3	4.3	3.6	3	5.9	6.144	7.338	8.806	10.239	12.230	14.677
VFD037C53A-21	5	6.7	5.5	4.6	9.1	3.943	4.803	5.743	6.572	8.005	9.572
VFD055C53A-21	7.5	9.9	8.2	6.9	13.7	2.668	3.222	3.829	4.447	5.369	6.381
VFD075C53A-21	10	12.1	10	8.3	16.5	2.183	2.642	3.183	3.639	4.403	5.305
VFD110C53A-21	15	18.7	15.5	13	25.7	1.413	1.704	2.032	2.355	2.841	3.387
VFD150C53A-21	20	24.2	20	16.8	33.3	1.092	1.321	1.572	1.819	2.201	2.621

Table 7-23

690V, 50/60 Hz, Three-phase

kW	HP	Rated current			Saturation Current			3% Impedance			5% Impedance		
		[Arms]			[Arms]			[mH]			[mH]		
		Light Duty	Normal Duty	Heavy Duty	Light Duty	Normal Duty	Heavy Duty	Light Duty	Normal Duty	Heavy Duty	Light Duty	Normal Duty	Heavy Duty
VFD185C63B-21	25	24	20	14	28.8	30.0	25.2	1.585	1.902	2.717	2.642	3.170	4.529
VFD220C63B-21	30	30	24	20	36.0	36.0	36.0	1.268	1.585	1.902	2.113	2.642	3.170
VFD300C63B-21	40	36	30	24	43.2	45.0	43.2	1.057	1.268	1.585	1.761	2.113	2.642
VFD370C63B-21	50	45	36	30	54.0	54.0	54.0	0.845	1.057	1.268	1.409	1.761	2.113

kW	HP	Rated current [Arms]			Saturation Current [Arms]			3% Impedance [mH]			5% Impedance [mH]		
		Light Duty	Normal Duty	Heavy Duty	Light Duty	Normal Duty	Heavy Duty	Light Duty	Normal Duty	Heavy Duty	Light Duty	Normal Duty	Heavy Duty
VFD450C63B-00 VFD450C63B-21	60	54	45	36	64.8	67.5	64.8	0.704	0.845	1.057	1.174	1.409	1.761
VFD550C63B-00 VFD550C63B-21	75	67	54	45	80.4	81.0	81.0	0.568	0.704	0.845	0.946	1.174	1.409
VFD750C63B-00 VFD750C63B-21	100	86	67	54	103.2	100.5	97.2	0.442	0.568	0.704	0.737	0.946	1.174
VFD900C63B-00 VFD900C63B-21	125	104	86	67	124.8	129.0	120.6	0.366	0.442	0.568	0.610	0.737	0.946
VFD1100C63B-00 VFD1100C63B-21	150	125	104	86	150.0	156.0	154.8	0.304	0.366	0.442	0.507	0.610	0.737
VFD1320C63B-00 VFD1320C63B-21	175	150	125	104	180.0	187.5	187.2	0.254	0.304	0.366	0.423	0.507	0.610
VFD1600C63B-00 VFD1600C63B-21	215	180	150	125	216.0	225.0	225.0	0.211	0.254	0.304	0.352	0.423	0.507
VFD2000C63B-00 VFD2000C63B-21	270	220	180	150	264.0	270.0	270.0	0.173	0.211	0.254	0.288	0.352	0.423
VFD2500C63B-00 VFD2500C63B-21	335	290	220	180	348.0	330.0	324.0	0.131	0.173	0.211	0.219	0.288	0.352
VFD3150C63B-00 VFD3150C63B-21	425	350	290	220	420.0	435.0	396.0	0.109	0.131	0.173	0.181	0.219	0.288
VFD4000C63B-00 VFD4000C63B-21	530	430	350	290	516.0	525.0	522.0	0.088	0.109	0.131	0.147	0.181	0.219
VFD4500C63B-00 VFD4500C63B-21	600	465	385	310	558.0	577.5	558.0	0.082	0.099	0.123	0.136	0.165	0.205
VFD5600C63B-00 VFD5600C63B-21	745	590	465	420	708.0	697.5	756.0	0.064	0.082	0.091	0.107	0.136	0.151
VFD6300C63B-00 VFD6300C63B-21	850	675	675	675	810.0	1012.5	1215.0	0.056	0.056	0.056	0.094	0.094	0.094

Table 7-24

AC input reactor dimension and specifications:

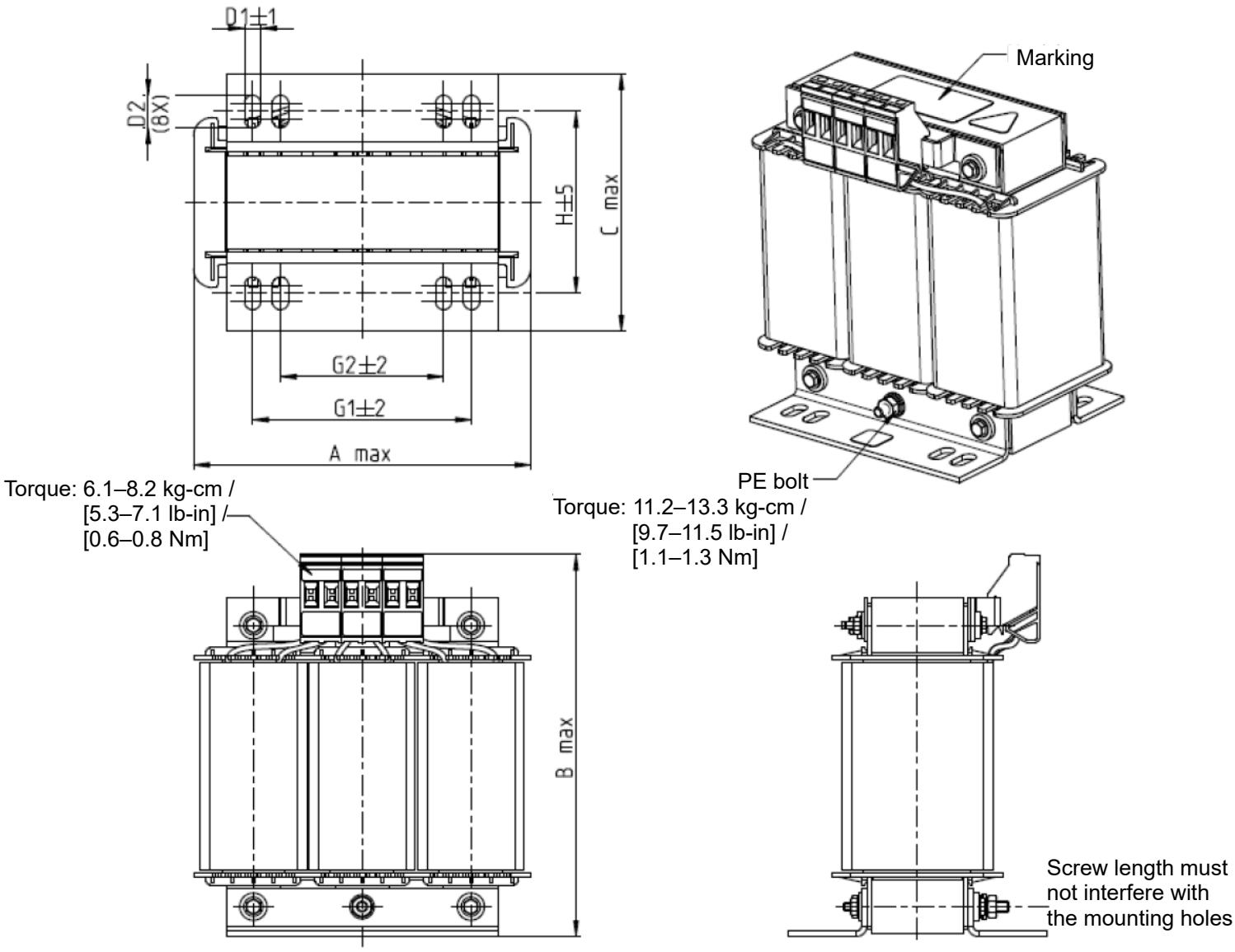

Unit: mm

AC Input Reactors Delta part #	A	B	C	D1*D2	H	G1	G2	PE D
DR005A0254	100	115	65	6*9	45	60	40	M4
DR008A0159	100	115	65	6*9	45	60	40	M4
DR011A0115	130	135	95	6*12	60	80.5	60	M4
DR017AP746	130	135	100	6*12	65	80.5	60	M4

Table 7-25

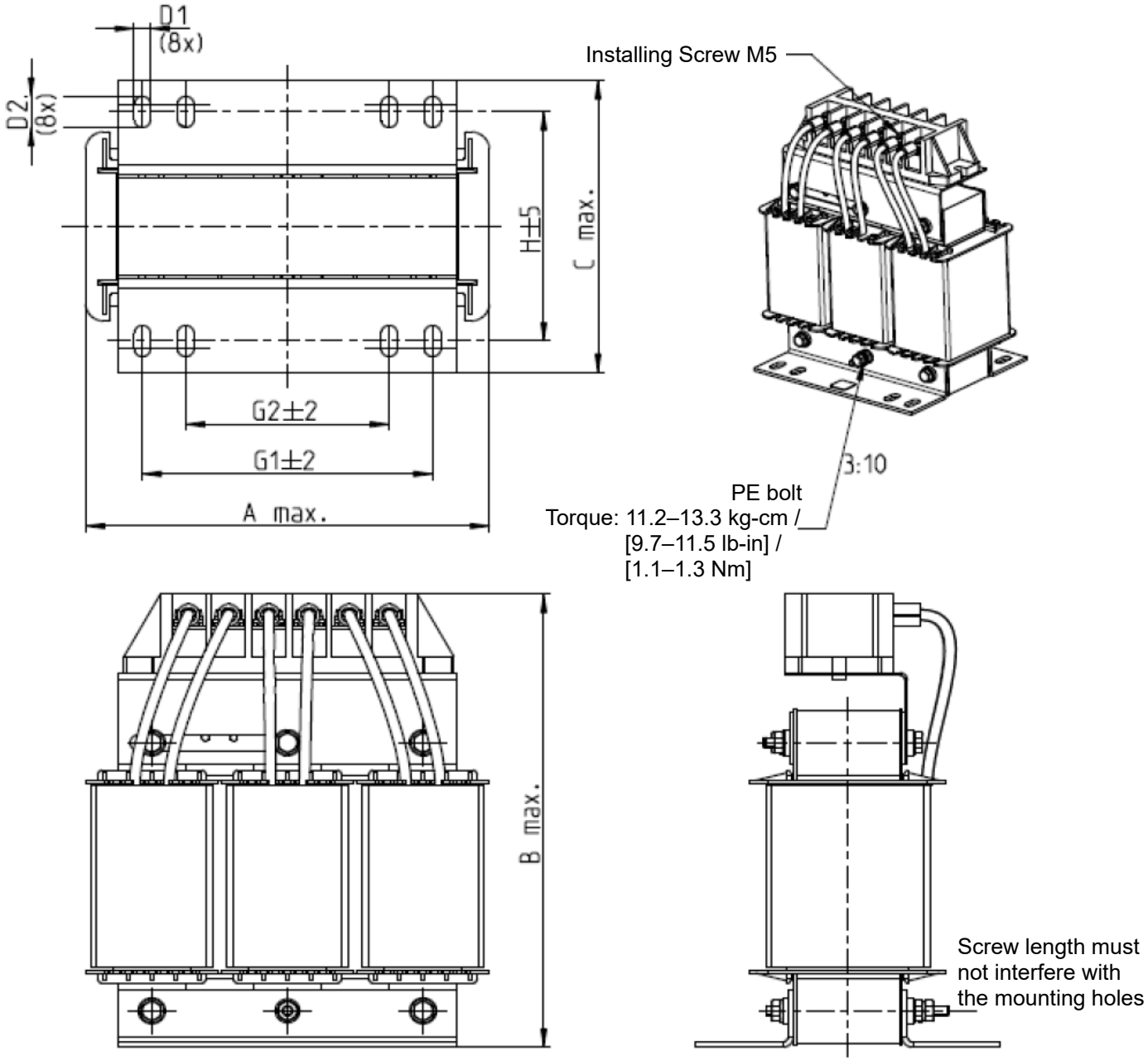

Unit: mm

AC Input Reactors Delta part #	A	B	C	D1*D2	H	G1	G2	PE D
DR025AP507	130	195	100	6*12	65	80.5	60	M4
DR033AP320	130	195	100	6*12	65	80.5	60	M4
DR049AP215	160	200	125	6*12	90	107	75	M4

Table 7-26

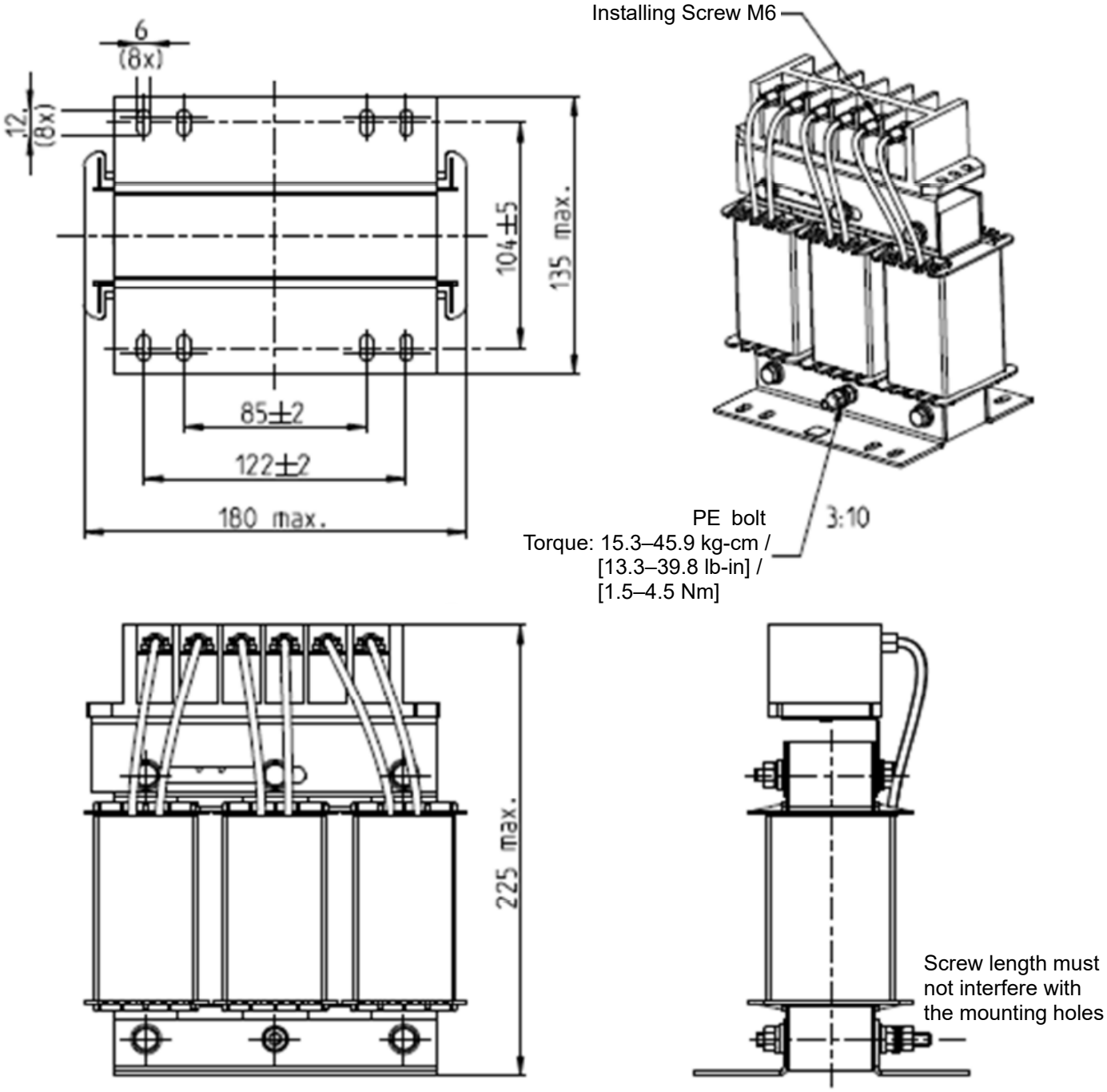

Unit: mm

AC Input Reactors Delta part #	A	B	C	D1*D2	H	G1	G2	PE D
DR065AP162	180	225	135	6*12	104	122	85	M6

Table 7-27

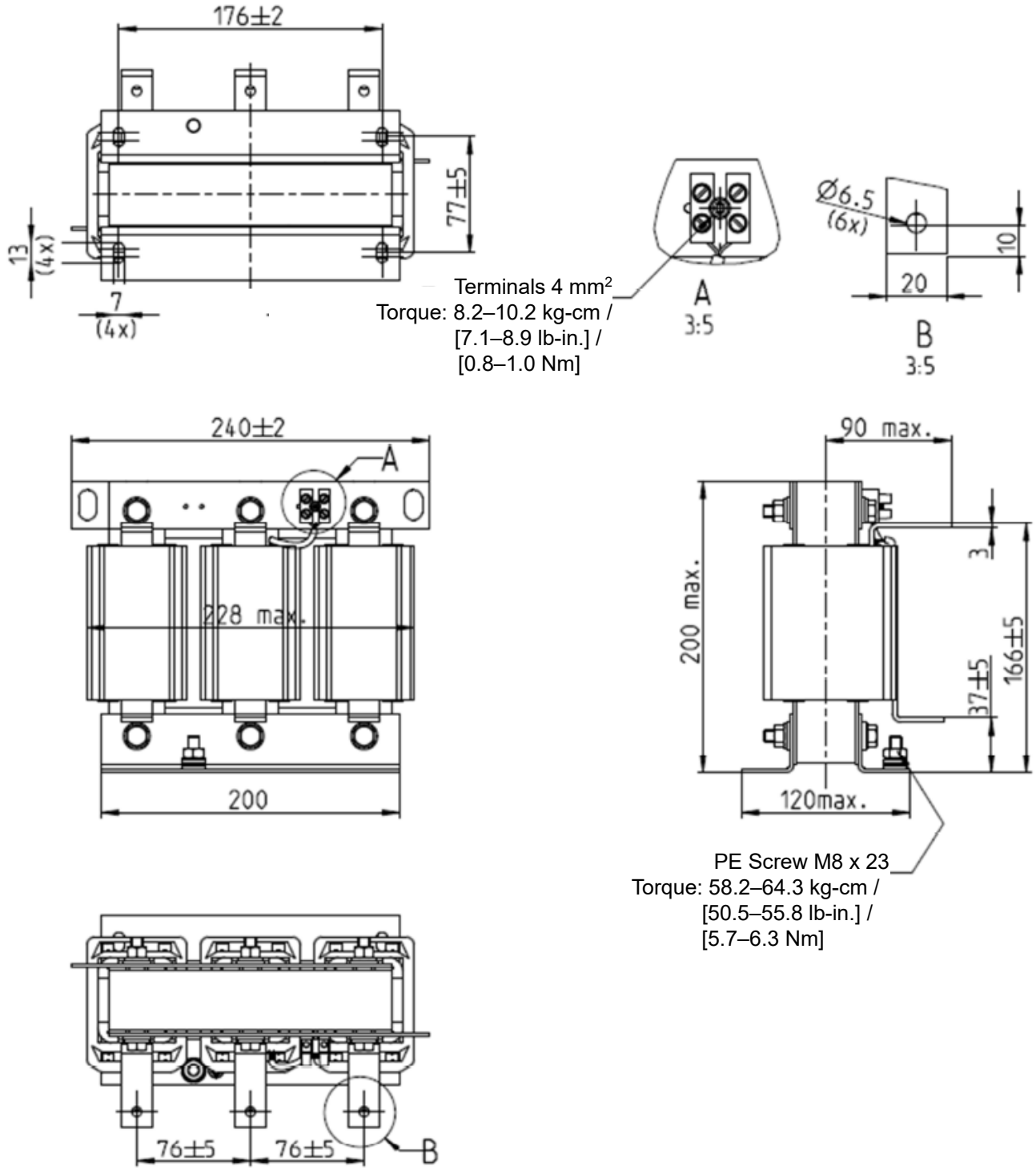

Unit: mm

AC Input Reactors Delta part #	Dimensions
DR075AP170	Dimensions are as shown in the figures above.

Table7-28

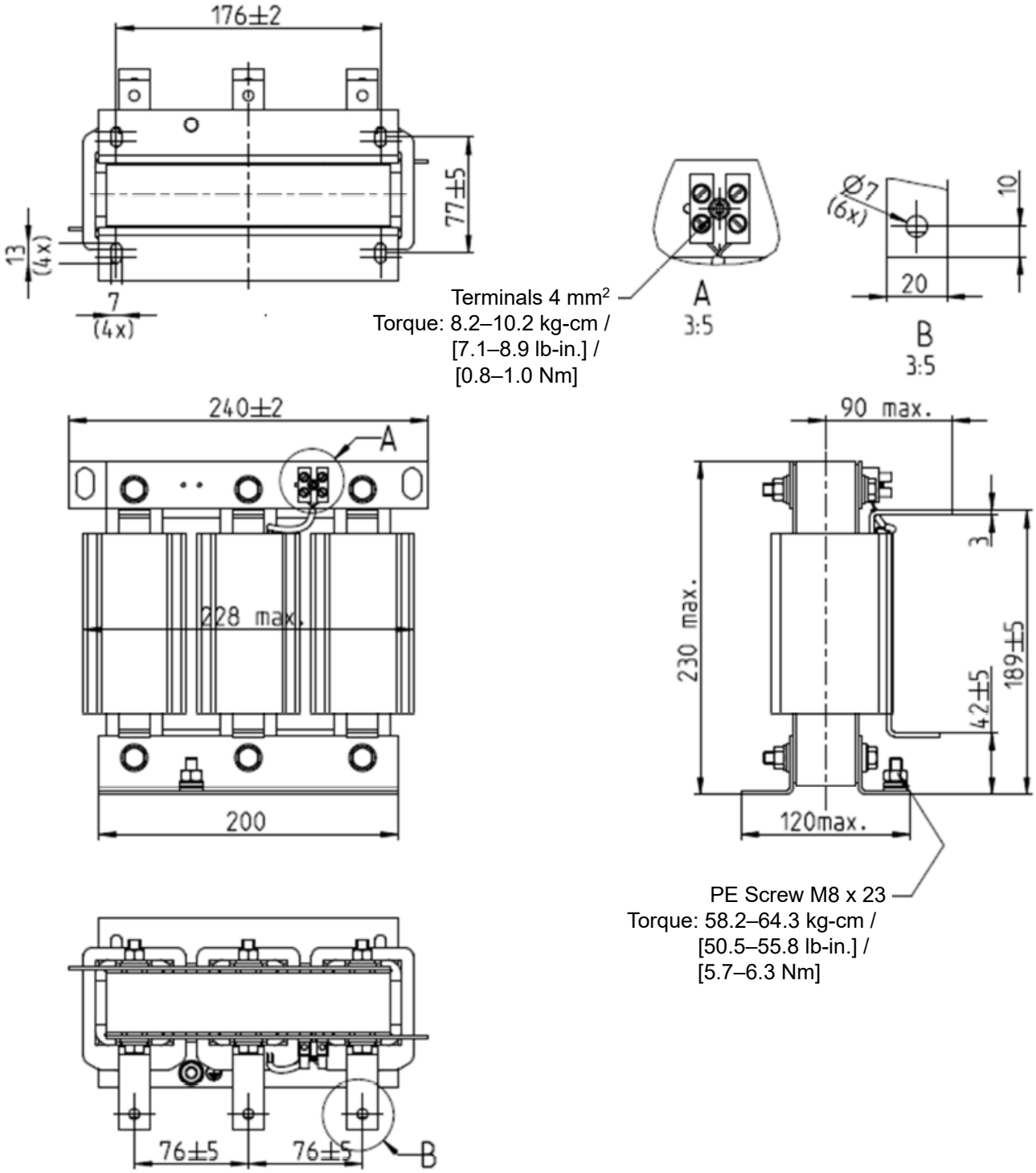

Unit: mm

AC Input Reactors Delta part #	Dimensions
DR090AP141	Dimensions are as shown in the figures above.

Table 7-29

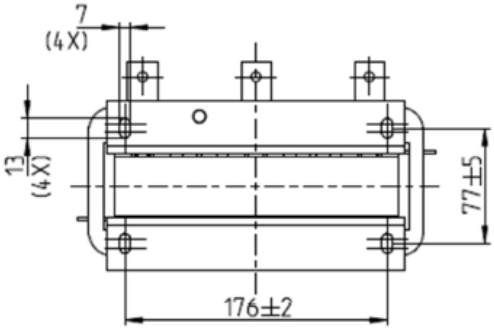

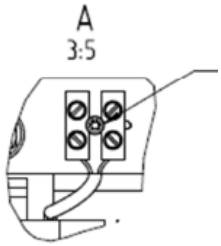

Terminals 4 mm^2
Torque: 6.1–8.2 kg-cm /
[5.3–7.1 lb-in.] /
[0.6–0.8 Nm]

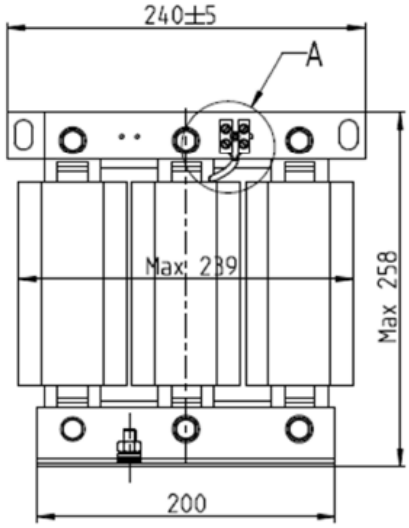

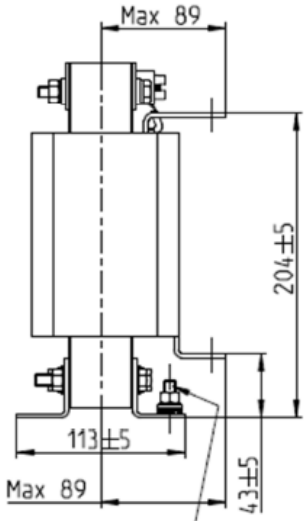

PE Screw M8 x 23
Torque: 58.2–64.3 kg-cm /
[50.5–55.8 lb-in.] /
[5.7–6.3 Nm]

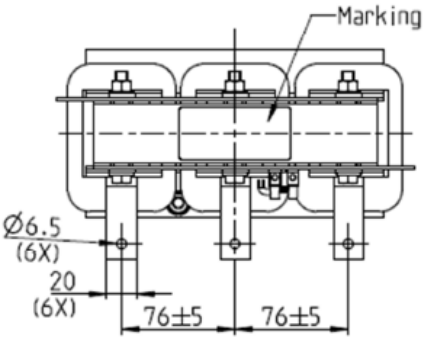

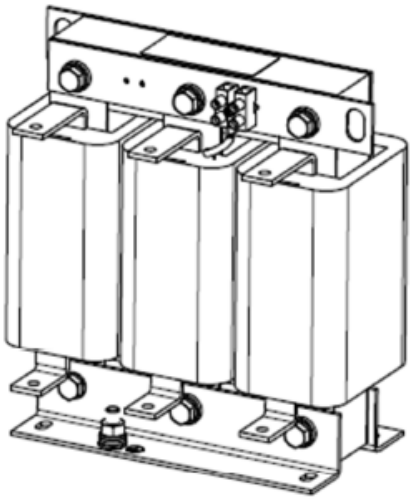

Unit: mm

AC Input Reactors Delta part #	Dimensions
DR146AP087	Dimensions are as shown in the figures above.

Table 7-30

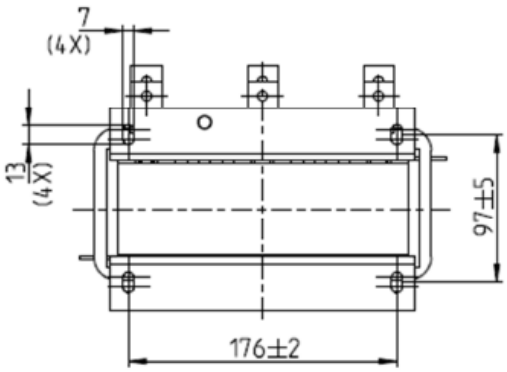

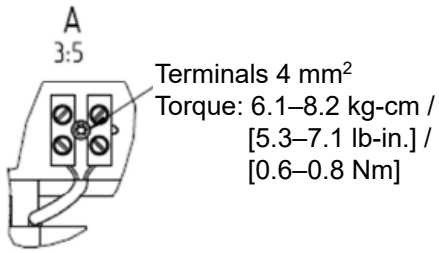

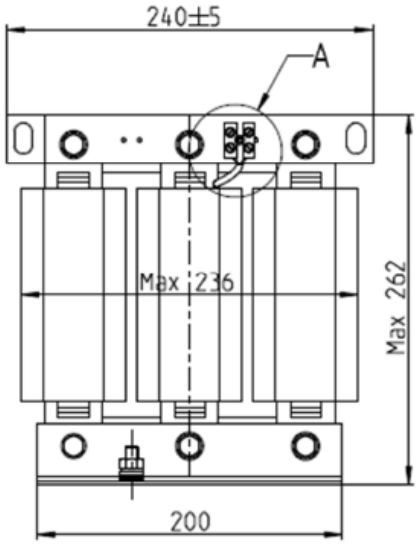

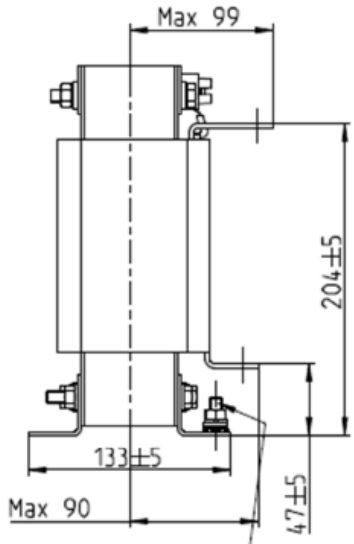

PE Screw M8 x 23
Torque: 58.2–64.3 kg-cm /
[50.5–55.8 lb-in.] /
[5.7–6.3 Nm]

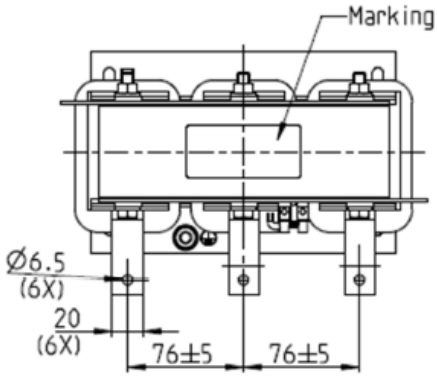

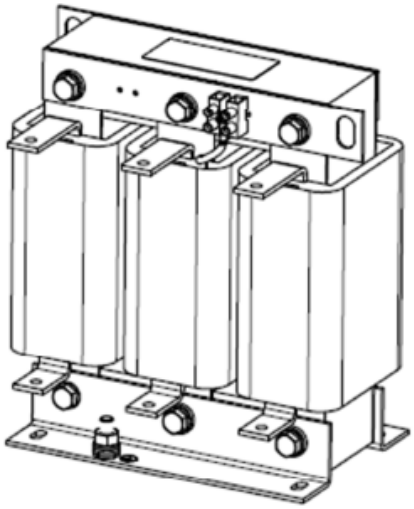

Unit: mm

AC Input Reactors Delta part #	Dimensions
DR180AP070	Dimensions are as shown in the figures above.

Table 7-31

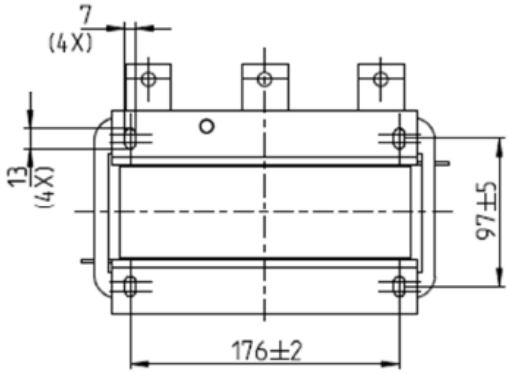

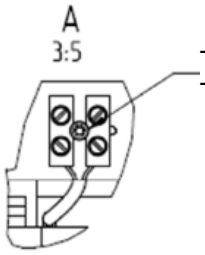

Terminals 4 mm^2
Torque: 6.1–8.2 kg-cm /
[5.3–7.1 lb-in.] /
[0.6–0.8 Nm]

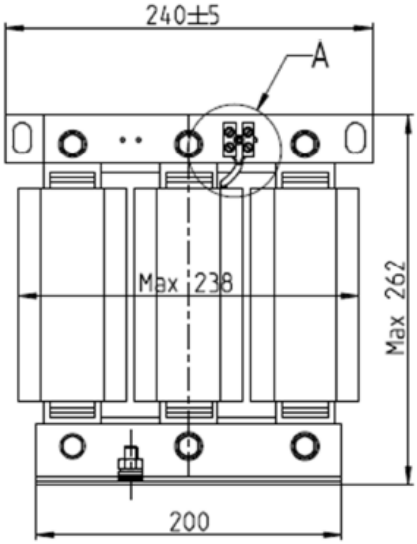

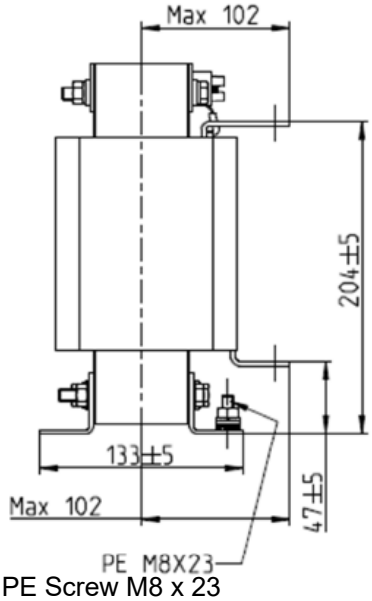

PE Screw M8 x 23
Torque: 58.2–64.3 kg-cm /
[50.5–55.8 lb-in.] /
[5.7–6.3 Nm]

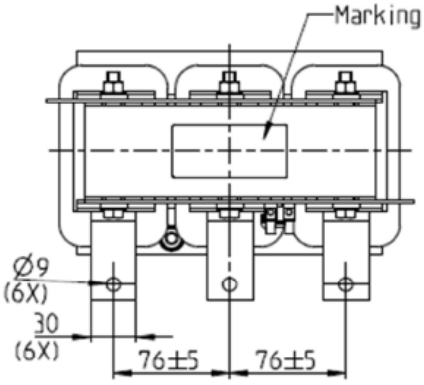

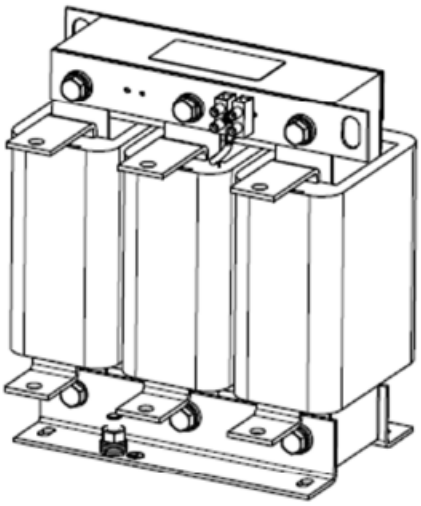

Unit: mm

AC Input Reactors Delta part #	Dimensions
DR215AP059	Dimensions are as shown in the figures above.

Table 7-32

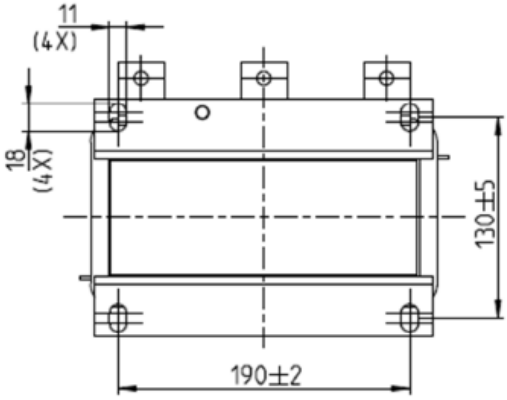

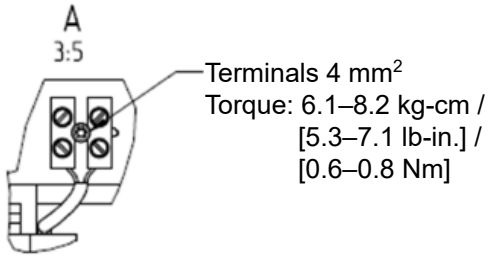

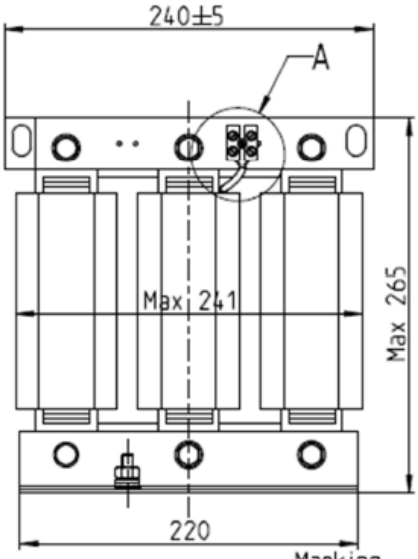

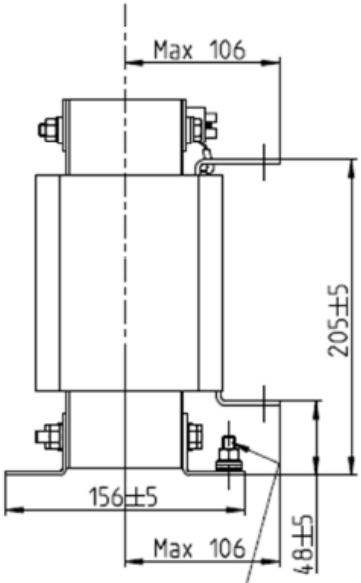

PE Screw M8 x 23
Torque: 58.2–64.3 kg-cm /
[50.5–55.8 lb-in.] /
[5.7–6.3 Nm]

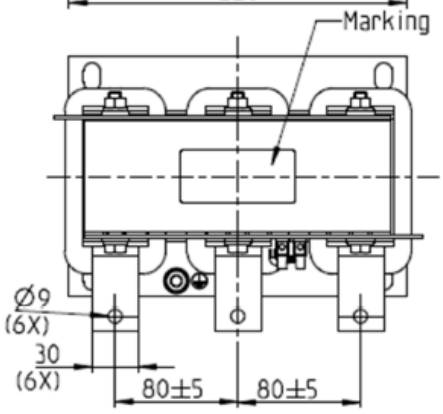

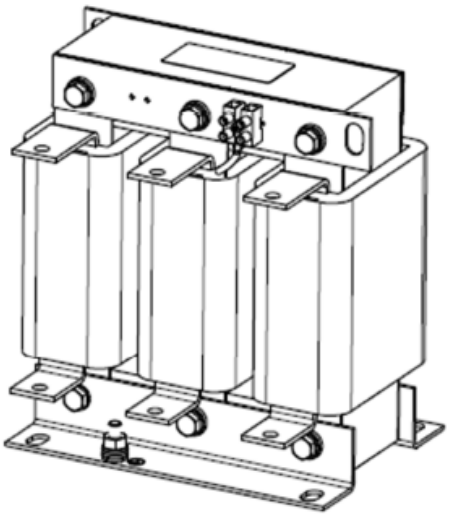

Unit: mm

AC Input Reactors Delta part #	Dimensions
DR276AP049	Dimensions are as shown in the figures above.

Table 7-33

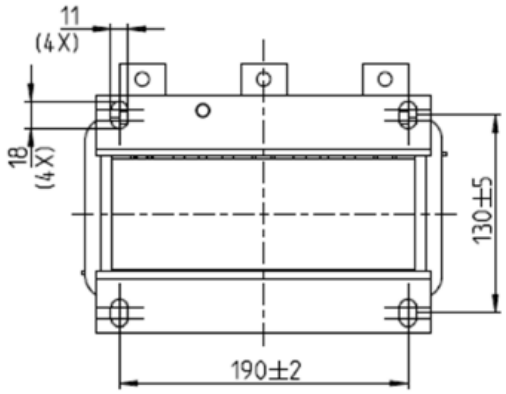

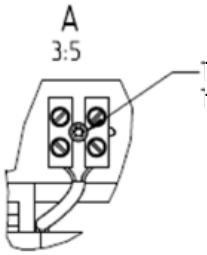

Terminals 4 mm²
Torque: 6.1–8.2 kg-cm /
[5.3–7.1 lb-in.] /
[0.6–0.8 Nm]

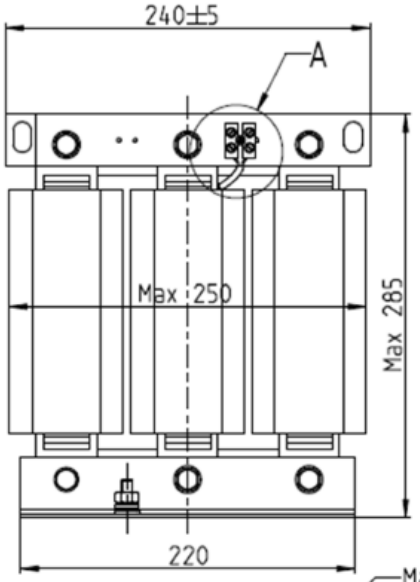

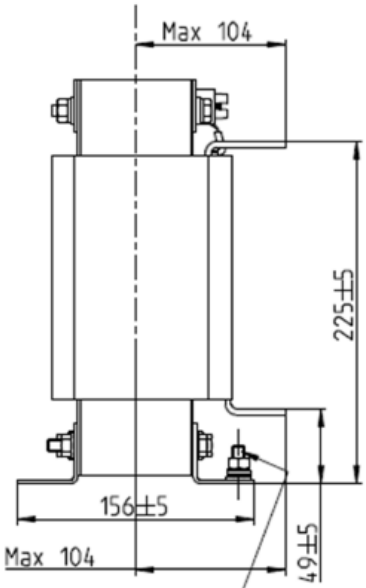

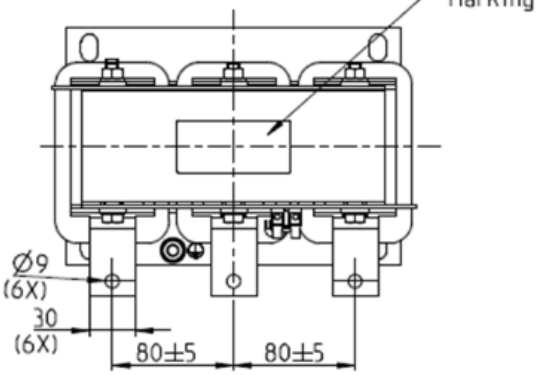

PE Screw M8 x 23
Torque: 58.2–64.3 kg-cm /
[50.5–55.8 lb-in.] /
[5.7–6.3 Nm]

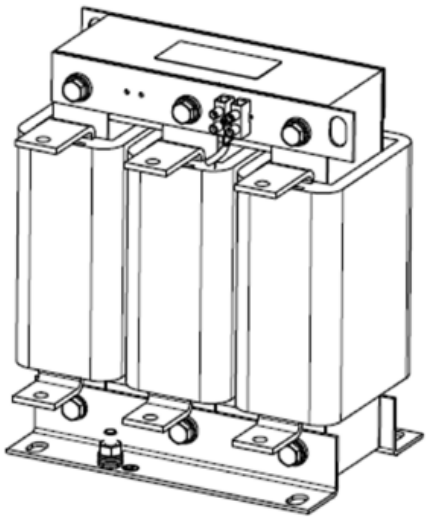

Unit: mm

AC Input Reactors Delta part #	Dimensions
DR346AP037	Dimensions are as shown in the figures above.

Table 7-34

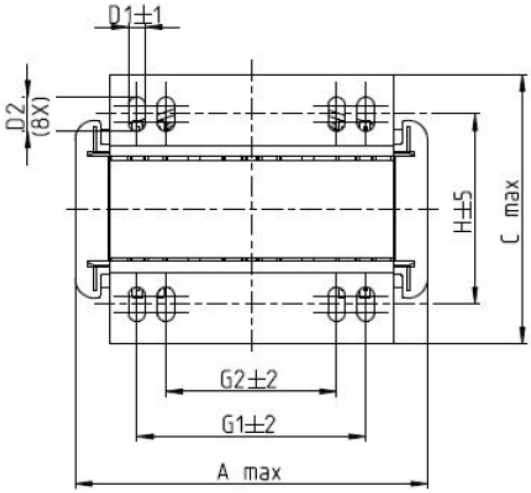

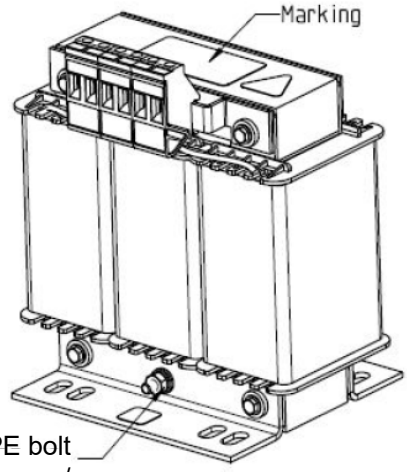

Torque: 6.1–8.2 kg-cm / [5.3–7.1 lb-in.] / [0.6–0.8 Nm]

Torque: 11.2–13.3 kg-cm / [9.7–11.5 lb-in.] / [1.1–1.3 Nm]

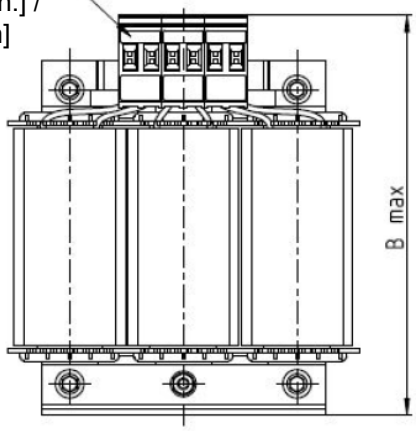

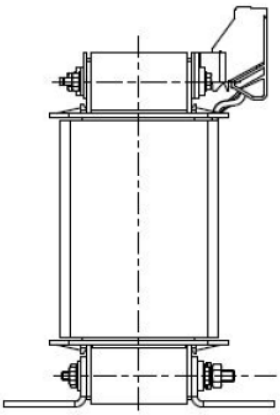

Screw length must not interfere with the mounting holes

Unit: mm

AC Input Reactors Delta part #	A	B	C	D1*D2	H	G1	G2	PE D
DR003A0810	100	125	65	6*9	43	60	40	M4
DR004A0607	100	125	65	6*9	43	60	40	M4
DR006A0405	130	135	95	6*12	60	80.5	60	M4
DR009A0270	160	160	105	6*12	75	107	75	M4
DR010A0231	160	160	115	6*12	90	107	75	M4
DR012A0202	160	160	115	6*12	90	107	75	M4
DR018A0117	160	160	115	6*12	90	107	75	M4

Table 7-35

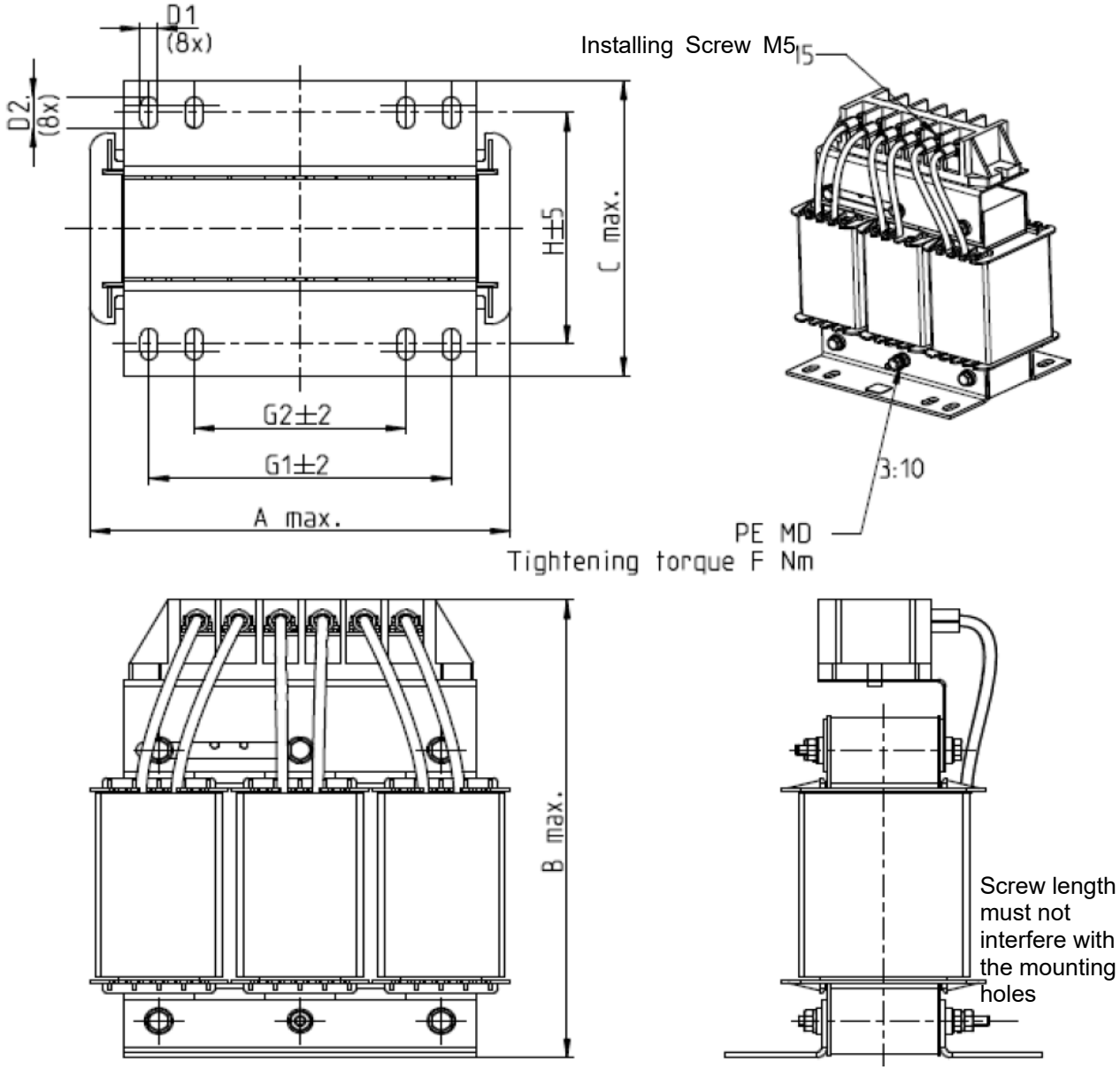

Unit: mm

AC Input Reactors Delta part #	A	B	C	D1*D2	H	G1	G2	PE D	F
DR024AP881	160	175	115	6*12	90	107	75	M4	11.2–13.3 kg-cm / [9.7–11.5 lb-in.] / [1.1–1.3 Nm]
DR032AP660	195	200	145	6*12	115	122	85	M6	29.1–32.1 kg-cm / [25.3–27.9 lb-in.] / [2.85–3.15 Nm]
DR038AP639	190	200	145	6*12	115	122	85	M6	
DR045AP541	190	200	145	6*12	115	122	85	M6	

Table 7-36

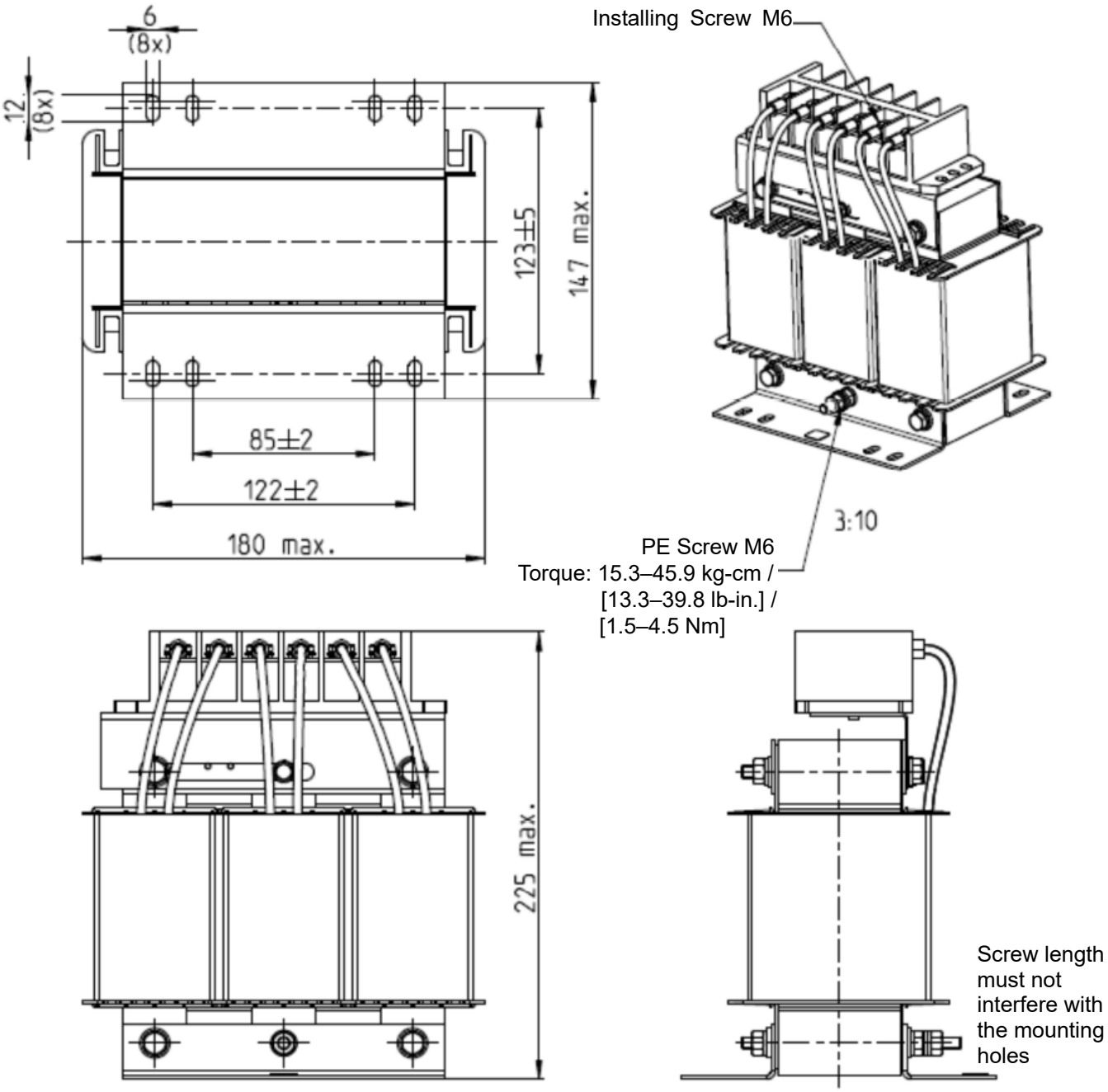

Unit: mm

AC Input Reactors Delta part #	Dimensions
DR060AP405	Dimensions are as shown in the figures above.

Table 7-37

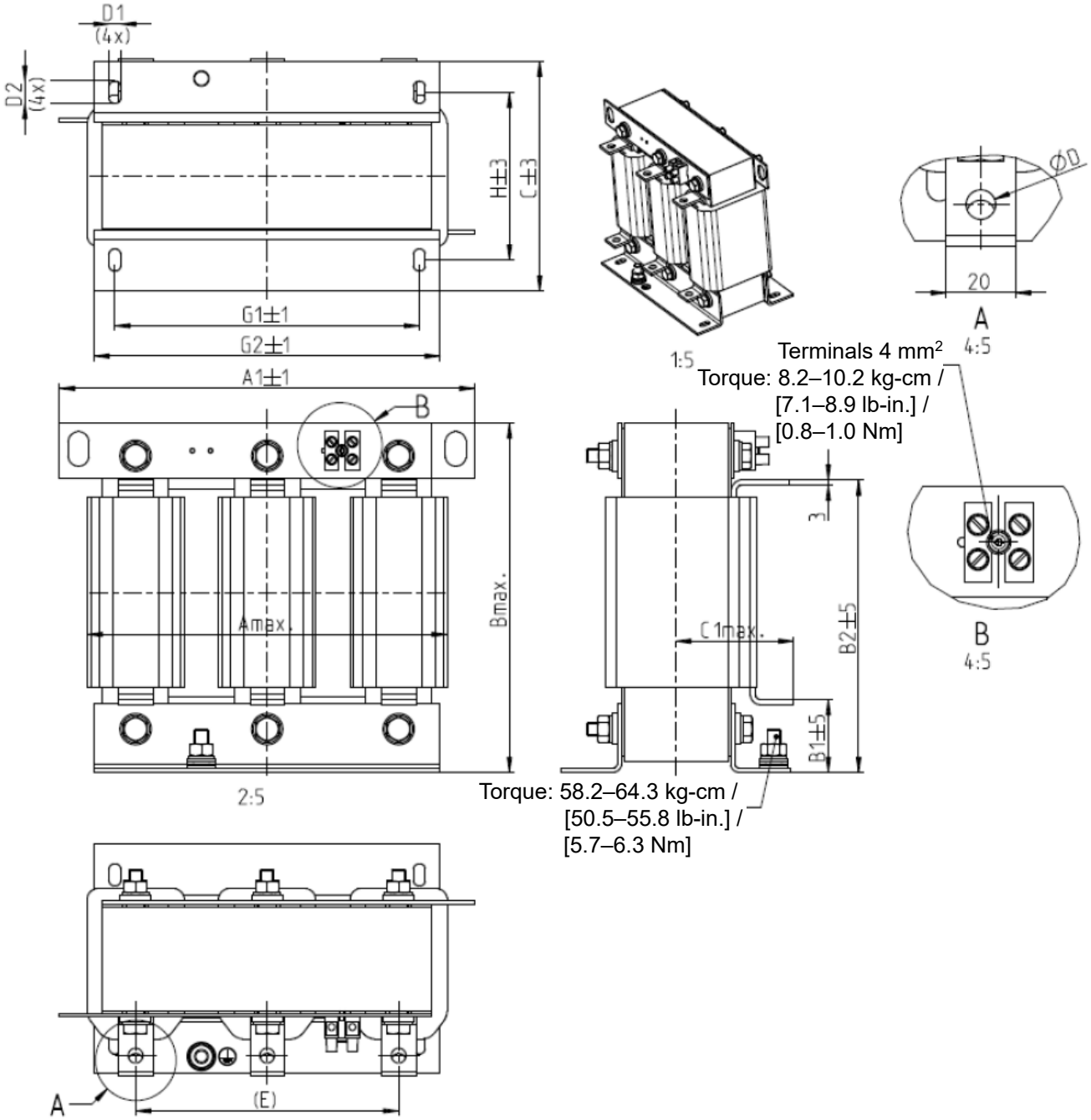

Unit: mm

AC Input Reactors Delta part #	A	A1	B	B1	B2	C	C1	D	D1*D2	E	G1	G2	H
DR073AP334	228	240	215	40	170	133	75	8.5	7*13	152	176	200	97
DR091AP267	228	240	245	40	195	133	90	8.8	7*13	152	176	200	97
DR110AP221	228	240	245	40	195	138	95	8.5	7*13	152	176	200	102

Table 7-38

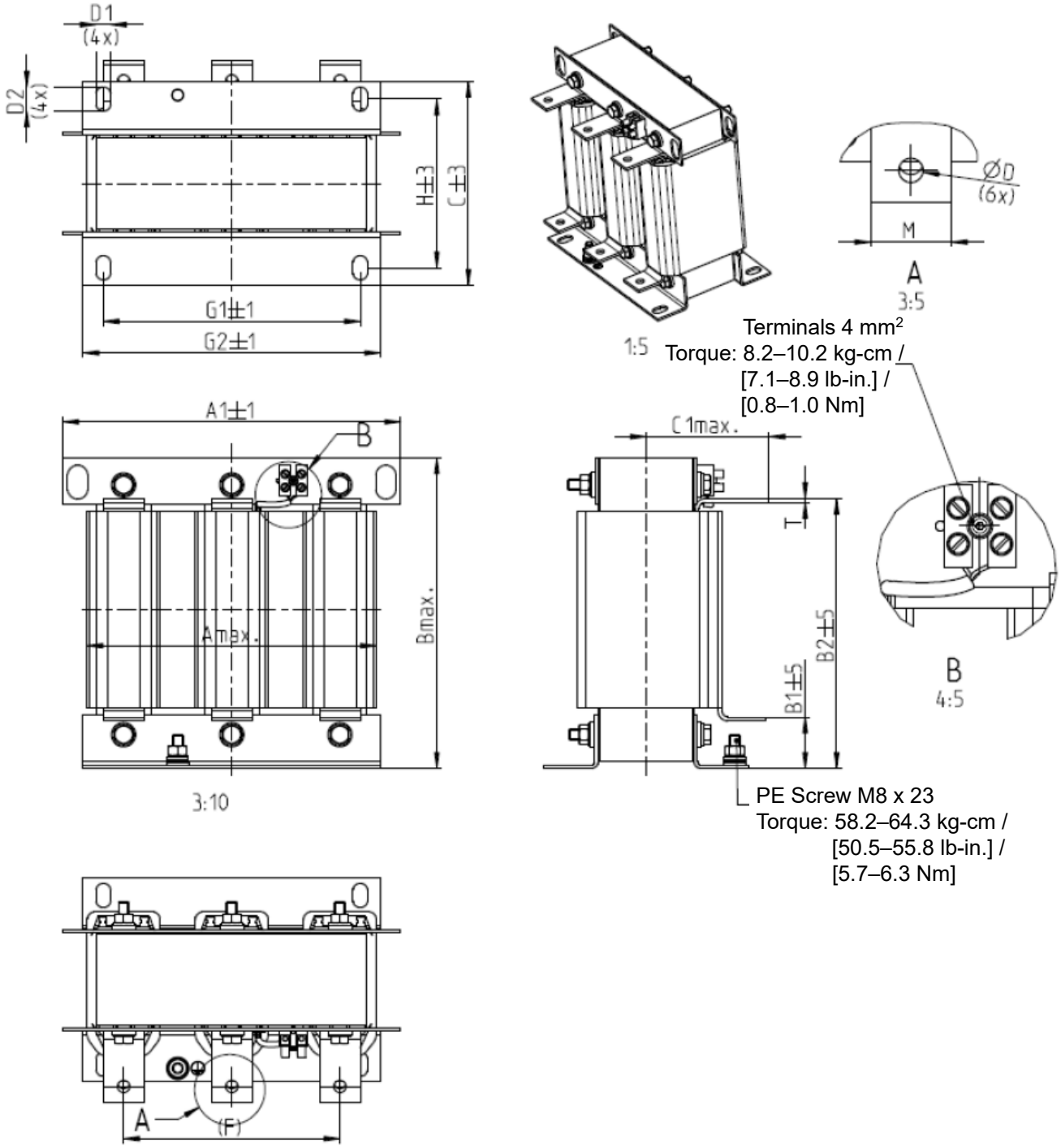

Unit: mm

AC Input Reactors Delta part #	A	A1	B	B1	B2	C	C1	D	D1*D2	F	G1	G2	H	M*T
DR150AP162	240	250	245	40	200	151	105	9	11*18	160	190	220	125	20*3
DR180AP135	240	250	245	40	200	151	105	9	11*18	160	190	220	125	20*3
DR220AP110	264	270	275	50	230	151	105	9	10*18	176	200	230	106	30*3
DR260AP098	264	270	285	50	240	151	105	9	10*18	176	200	230	106	30*3
DR310AP078	300	300	345	55	295	153	105	9	10*18	200	224	260	113	30*3
DR370AP066	300	300	345	55	295	158	120	9	10*18	200	224	260	118	50*4

Table 7-39

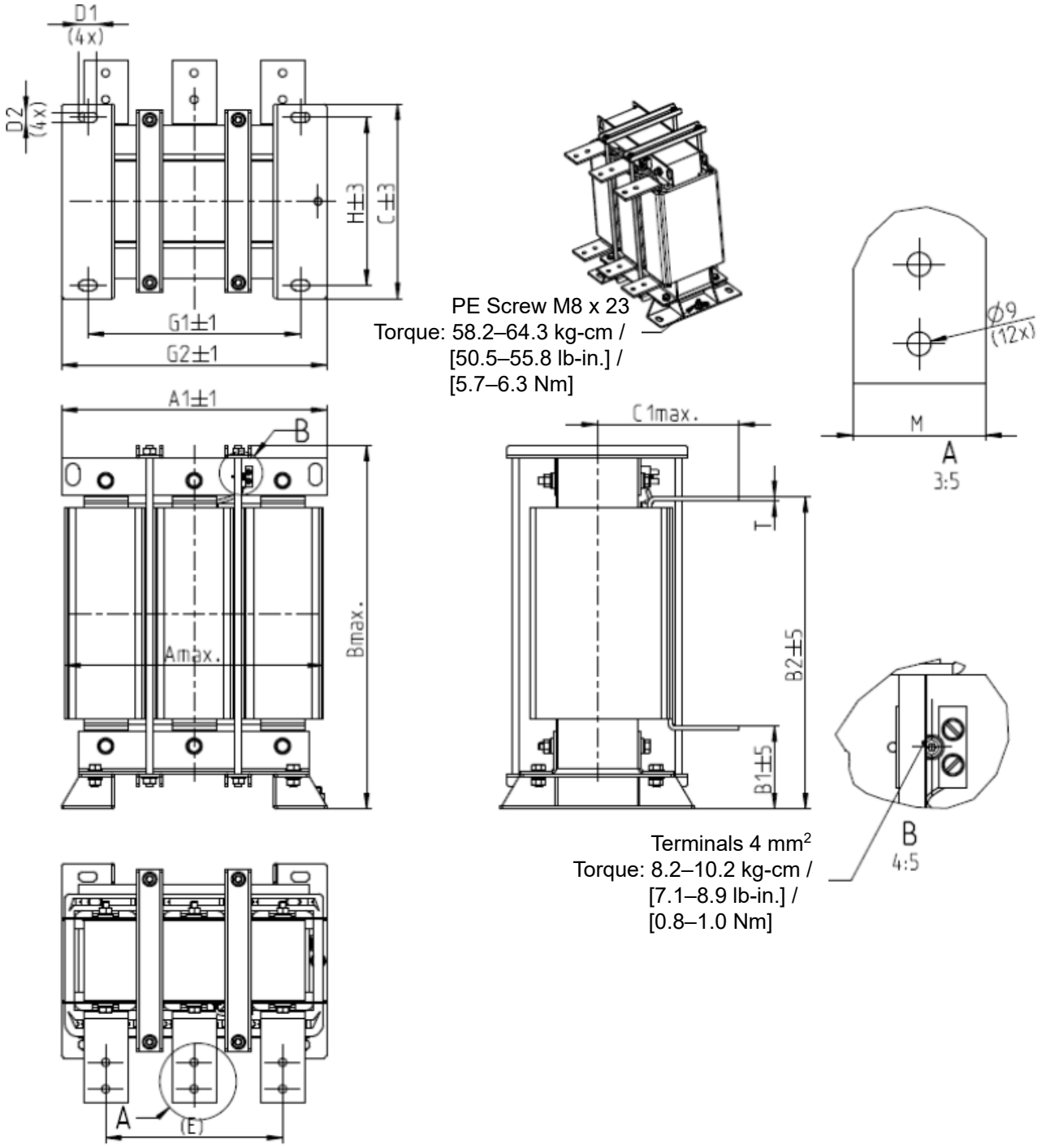

Unit: mm

AC Input Reactors Delta part #	A	A1	B	B1	B2	C	C1	D1*D2	E	G1	G2	H	M*T
DR460AP054	300	300	425	95	355	220	170	11*21	200	240	300	190	50*4
DR550AP044	300	300	445	95	375	220	170	11*21	200	240	300	190	50*4
DR616AP039	360	360	465	105	385	252	190	11*21	240	246	316	220	50*5
DR683AP036	360	360	465	105	385	252	195	11*21	240	246	316	220	50*5
DR866AP028	360	360	520	105	435	272	200	11*21	240	246	316	240	60*6

Table 7-40

DC Reactor

A DC reactor can also increase line impedance, improve the power factor, reduce input current, increase system power, and reduce interference generated from the motor drive. A DC reactor stabilizes the DC bus voltage. Compared with an AC input reactor, a DC reactor is in smaller size, lower price, and lower voltage drop (lower power dissipation).

Installation

Install a DC reactor between terminals +2/DC+ and +1/DC+. Remove the jumper, as shown in the figure below, before installing a DC reactor.

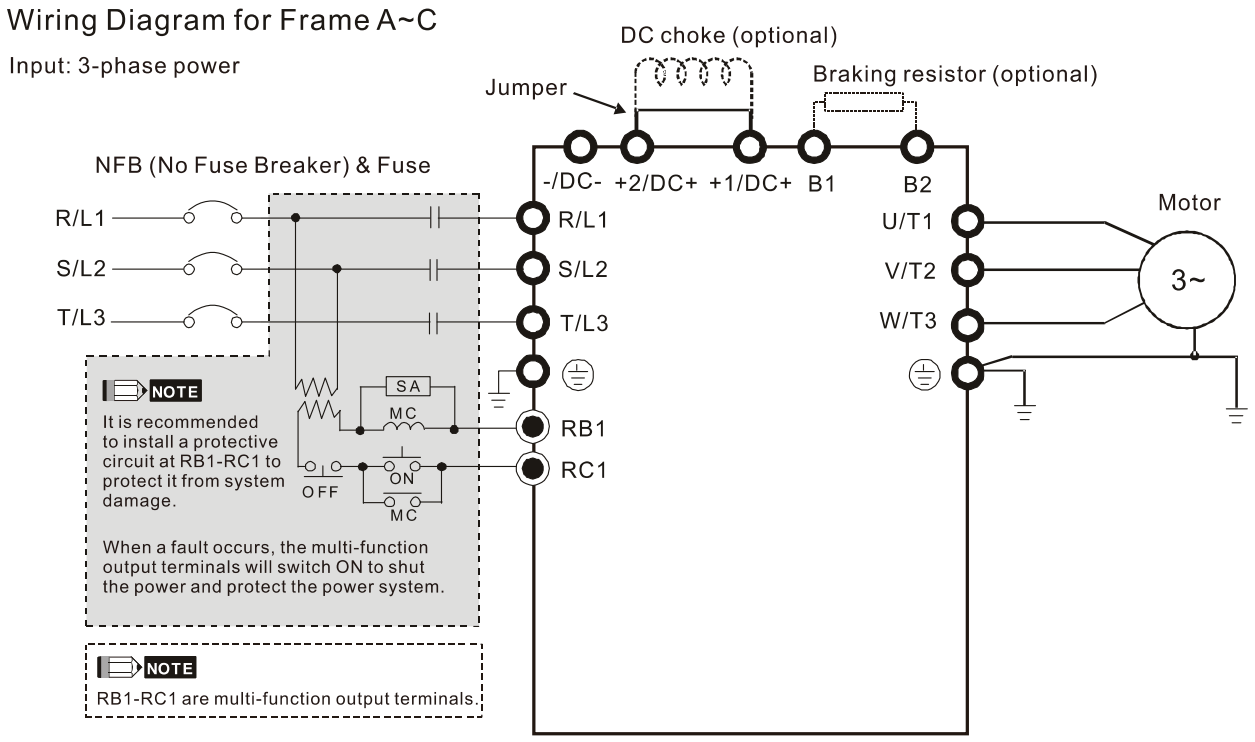

Wiring of DC reactor

Figure 7-7

Applicable Reactors

200V–230V, 50/60 Hz

Model	HP	Heavy Duty				Super Heavy Duty			
		Rated current [Arms]	Saturation current [Arms]	DC reactor [mH]	DC reactor Delta Part #	Rated current [Arms]	Saturation current [Arms]	DC reactor [mH]	DC reactor Delta Part #
VFD007C23A-21	1	5	9	8.64	DR005D0585	3	6	9.762	N/A
VFD015C23A-21	2	8	14.4	12.78	DR008D0366	5	10	5.857	DR005D0585
VFD022C23A-21	3	11	19.8	18	DR011D0266	8	16	3.66	DR008D0366
VFD037C23A-21	5	17	30.6	28.8	DR017D0172	11	22	2.662	DR011D0266
VFD055C23A-21	7.5	25	45	43.2	DR025D0117	17	34	1.722	DR017D0172
VFD075C23A-21	10	33	59.4	55.8	DR033DP851	25	50	1.172	DR025D0117
VFD110C23A-21	15	49	88.2	84.6	DR049DP574	33	66	0.851	DR033DP851
VFD150C23A-21	20	65	117	111.6	DR065DP432	49	98	0.574	DR049DP574
VFD185C23A-21	25	75	135	127.8	DR075DP391	65	130	0.432	DR065DP432
VFD220C23A-21	30	90	162	154.8	DR090DP325	75	150	0.391	DR075DP391

Table7-41

380V–460V, 50/60 Hz

Model	HP	Heavy Duty				Super Heavy Duty			
		Rated current [Arms]	Saturation current [Arms]	DC reactor [mH]	DC reactor Delta Part #	Rated current [Arms]	Saturation current [Arms]	DC reactor [mH]	DC reactor Delta Part #
VFD007C43A-21	1	3	5.4	18.709	DR003D1870	1.7	3.4	33.016	N/A
VFD015C43A-21	2	4	7.2	14.031	DR004D1403	3	6	18.709	DR003D1870
VFD022C43A-21	3	6	10.8	9.355	DR006D0935	4	8	14.031	DR004D1403
VFD037C43A-21	5	9	16.2	6.236	DR009D0623	6	12	9.355	DR006D0935
VFD040C43A-21	5	10.5	18.9	5.345	DR010D0534	9	18	6.236	DR009D0623
VFD055C43A-21	7.5	12	21.6	4.677	DR012D0467	10.5	21	5.345	DR010D0534
VFD075C43A-21	10	18	32.4	3.119	DR018D0311	12	24	4.677	DR012D0467
VFD110C43A-21	15	24	43.2	2.338	DR024D0233	18	36	3.119	DR018D0311
VFD150C43A-21	20	32	57.6	1.754	DR032D0175	24	48	2.338	DR024D0233
VFD185C43A-21	25	38	68.4	1.477	DR038D0147	32	64	1.754	DR032D0175
VFD220C43A-21	30	45	81	1.247	DR045D0124	38	76	1.477	DR038D0147
VFD300C43A-21	40	60	108	0.935	DR060DP935	45	90	1.247	DR045D0124

Table 7-42

575V

Model	HP	Rated current [Arms]			Saturation current [Arms]	4% DC reactor [mH]		
		Light duty	Normal duty	Heavy duty		Light duty	Normal duty	Heavy duty
VFD015C53A-21	2	3	2.5	2.1	4.2	20.336	24.404	29.052
VFD022C531-21	3	4.3	3.6	3	5.9	14.188	16.947	20.336
VFD037C53A-21	5	6.7	5.5	4.6	9.1	9.106	11.093	13.263
VFD055C53A-21	7.5	9.9	8.2	6.9	13.7	6.163	7.440	8.842
VFD075C53A-21	10	12.1	10	8.3	16.5	5.042	6.101	7.351
VFD110C53A-21	15	18.7	15.5	13	25.7	3.263	3.936	4.693
VFD150C53A-21	20	24.2	20	16.8	33.3	2.521	3.050	3.632

Table 7-43

690V

Model	HP	Rated current [Arms]			Saturation current [Arms]			4% DC reactor [mH]		
		Light duty	Normal duty	Heavy duty	Light duty	Normal duty	Heavy duty	Light duty	Normal duty	Heavy duty
VFD185C63B-21	25	24	20	14	28.8	30.0	25.2	3.661	4.393	6.275
VFD220C63B-21	30	30	24	20	36.0	36.0	36.0	2.928	3.661	4.393
VFD300C63B-21	40	36	30	24	43.2	45.0	43.2	2.440	2.928	3.661
VFD370C63B-21	50	45	36	30	54.0	54.0	54.0	1.952	2.440	2.928

Table 7-44

The table below shows the models with built-in DC reactors:

Frame D	VFD450C63B-00; VFD550C63B-00; VFD450C63B-21; VFD550C63B-21
Frame E	VFD750C63B-00; VFD900C63B-00; VFD1100C63B-00; VFD1320C63B-00 VFD750C63B-21; VFD900C63B-21; VFD1100C63B-21; VFD1320C63B-21
Frame F	VFD1600C63B-00; VFD2000C63B-00; VFD1600C63B-21; VFD2000C63B-21
Frame G	VFD2500C63B-00; VFD3150C63B-00; VFD2500C63B-21; VFD3150C63B-21
Frame H	VFD4000C63B-00; VFD4500C63B-00; VFD5600C63B-00; VFD6300C63B-00 VFD4000C63B-21; VFD4500C63B-21; VFD5600C63B-21; VFD6300C63B-21

Table 7-45

DC reactor dimension and specifications:

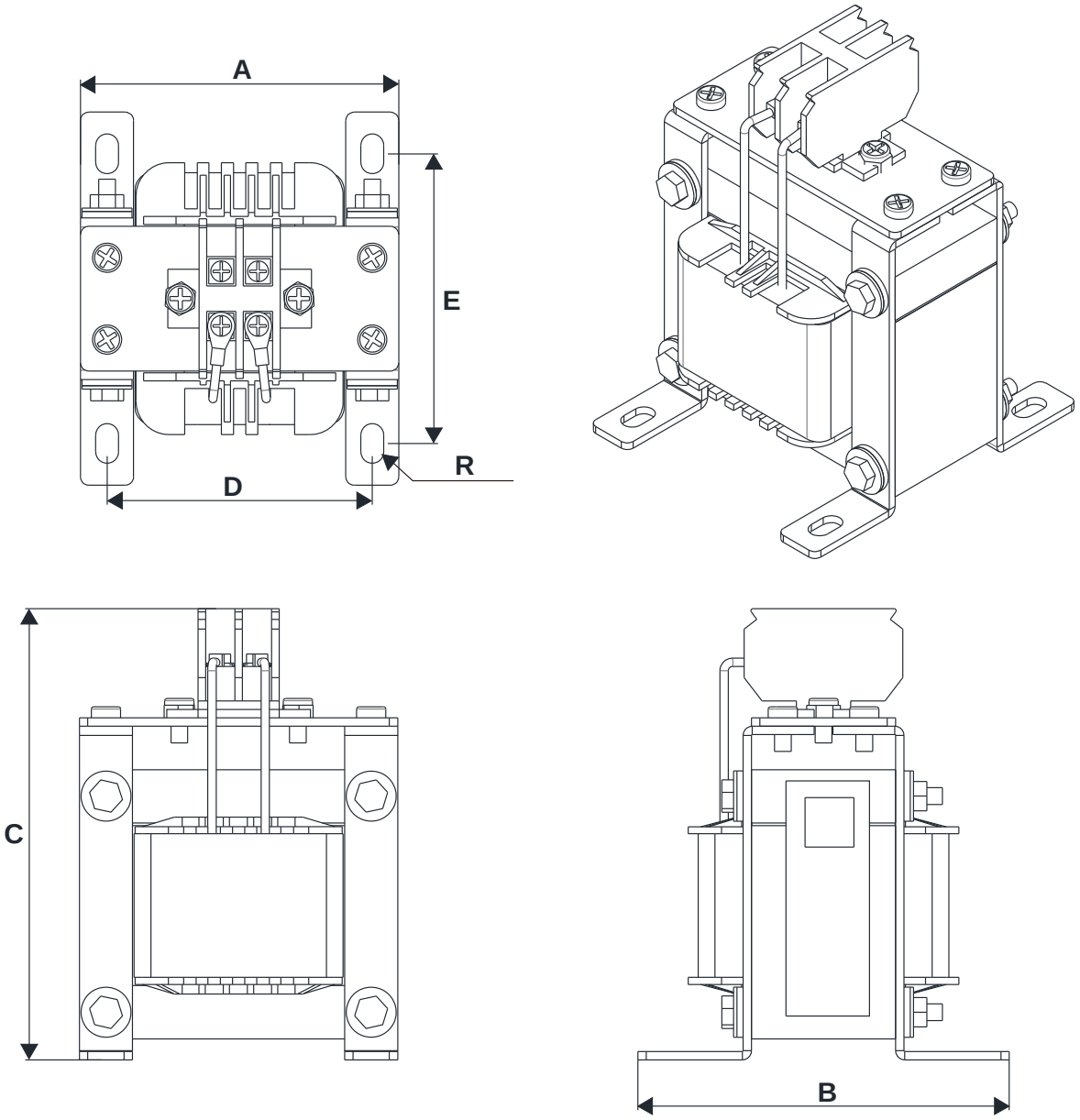

200V–230V / 50–60 Hz

DC reactor Delta Part #	A [mm]	B [mm]	C [mm]	D [mm]	E [mm]	R [mm]
DR005D0585	79	78	112	64±2	56±2	9.5*5.5
DR008D0366	79	78	112	64±2	56±2	9.5*5.5
DR011D0266	79	92	112	64±2	69.5±2	9.5*5.5
DR017D0172	79	112	112	64±2	89.5±2	9.5*5.5
DR025D0117	99	105	128	79±2	82.5±2	9.5*5.5
DR033DP851	117	110	156	95±2	87±2	10*6.5
DR049DP574	117	120	157	95±2	97±2	10*6.5
DR065DP432	117	140	157	95±2	116.5±2	10*6.5
DR075DP391	136	135	178	111±2	112±2	10*6.5
DR090DP325	136	135	179	111±2	112±2	10*6.5
DR003D1870	79	78	112	64±2	56±2	9.5*5.5

DC reactor Delta Part #	A [mm]	B [mm]	C [mm]	D [mm]	E [mm]	R [mm]
DR004D1403	79	92	112	64±2	69.5±2	9.5*5.5
DR006D0935	79	92	112	64±2	69.5±2	9.5*5.5
DR009D0623	79	112	112	64±2	89.5±2	9.5*5.5
DR010D0534	99	93	128	79±2	70±2	9.5*5.5
DR012D0467	99	105	128	79±2	82.5±2	9.5*5.5
DR018D0311	117	110	144	95±2	87±2	10*6.5
DR024D0233	117	120	144	95±2	97±2	10*6.5
DR032D0175	117	140	157	95±2	116.5±2	10*6.5
DR038D0147	136	135	172	111±2	112±2	10*6.5
DR045D0124	136	135	173	111±2	112±2	10*6.5
DR060DP935	136	150	173	111±2	127±2	10*6.5

Table 7-46

The table below shows the THDi specification when using Delta's drives to work with AC/DC reactors:

Current Harmonics	Models without built-in DC reactor				Models with built-in DC reactor		
	No AC/DC reactor	3% input AC reactor	5% input AC reactor	4% DC reactor	No AC/DC reactor	3% input AC reactor	5% input AC reactor
5th	73.3%	38.5%	30.8%	25.5%	31.16%	27.01%	25.5%
7th	52.74%	15.3%	9.4%	18.6%	23.18%	9.54%	8.75%
11th	7.28%	7.1%	6.13%	7.14%	8.6%	4.5%	4.2%
13th	0.4%	3.75%	3.15%	0.48%	7.9%	0.22%	0.17%
THDi	91%	43.6%	34.33%	38.2%	42.28%	30.5%	28.4%
Note:	The THDi specification listed here may be slightly different from the actual THDi, depending on the installation and environmental conditions (wires, motors).						

Table 7-47

AC Output reactor

When using drives in long wiring output application, ground fault (GFF), over-current (OC) and motor over-voltage (OV) often occur. GFF and OC cause errors due to the drive's self-protective mechanism; over-voltage damages motor insulation.

The excessive length of the output wires makes the grounded stray capacitance too large, increase the three-phase output common mode current, and the reflected wave of the long wires makes the motor dv / dt and the motor terminal voltage too high. Thus, installing a reactor on the drive's output side can increase the high-frequency impedance to reduce the dv / dt and terminal voltage to protect the motor.

Installation

Installing an AC output reactor in series between the three output phases U V W and the motor, as shown in the figure below:

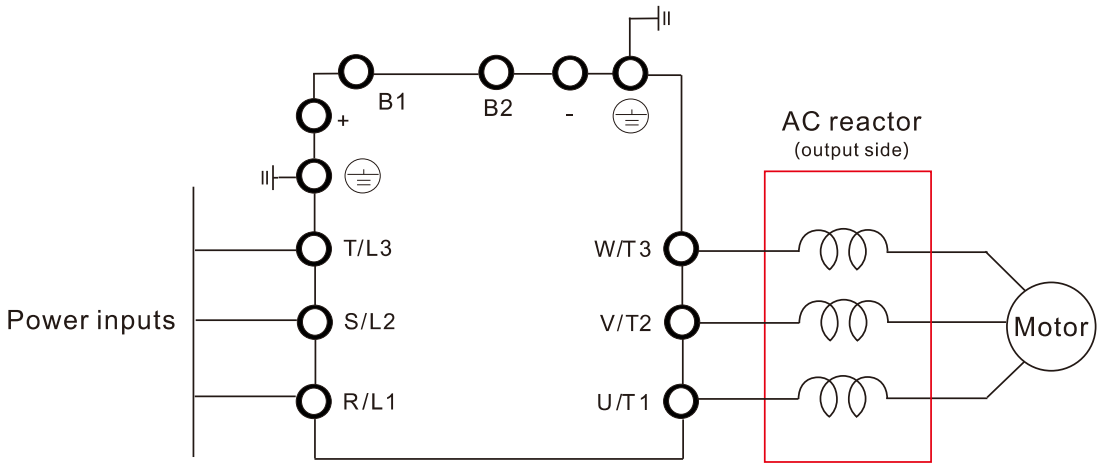

Wiring of AC output reactor

Figure 7-8

Applicable Reactors:

200V–230V, 50/60 Hz / Heavy Duty

Model	HP	Rated current [Arms]	Saturation current [Arms]	3% impedance [mH]	5% impedance [mH]	Built-in DC reactor	Output AC reactor Delta part #	Heat Dissipation (W)
VFD007C23A-21	1	5	9	2.536	4.227	No	DR005L0254	15
VFD015C23A-21	2	8	14.4	1.585	2.642	No	DR008L0159	30
VFD022C23A-21	3	11	19.8	1.152	1.922	No	DR011L0115	33
VFD037C23A-21	5	17	30.6	0.746	1.243	No	DR017LP746	34
VFD055C23A-21	7.5	25	45	0.507	0.845	No	DR025LP507	50
VFD075C23A-21	10	33	59.4	0.32	0.534	No	DR033LP320	50
VFD110C23A-21	15	49	88.2	0.216	0.359	No	DR049LP215	62
VFD150C23A-21	20	65	117	0.163	0.271	No	DR065LP162	70
VFD185C23A-21	25	75	135	0.169	0.282	No	DR075LP170	80
VFD220C23A-21	30	90	162	0.141	0.235	No	DR090LP141	80
VFD300C23A-00 VFD300C23A-21	40	120	216	0.106	0.176	Yes	DR146LP087	110

Model	HP	Rated current [Arms]	Saturation current [Arms]	3% impedance [mH]	5% impedance [mH]	Built-in DC reactor	Output AC reactor Delta part #	Heat Dissipation (W)
VFD370C23A-00 VFD370C23A-21	50	146	262.8	0.087	0.145	Yes	DR146LP087	110
VFD450C23A-00 VFD450C23A-21	60	180	324	0.070	0.117	Yes	DR180LP070	125
VFD550C23A-00 VFD550C23A-21	75	215	387	0.059	0.098	Yes	DR215LP059	150
VFD750C23A-00 VFD750C23A-21	100	255	459	0.049	0.083	Yes	DR276LP049	210
VFD900C23A-00 VFD900C23A-21	125	346	622.8	0.037	0.061	Yes	DR346LP037	220

Table 7-48

200V–230V, 50/60 Hz / Super Heavy Duty

Model	HP	Rated current [Arms]	Saturation current [Arms]	3% impedance [mH]	5% impedance [mH]	Built-in DC reactor	Output AC reactor Delta part #	Heat Dissipation (W)
VFD007C23A-21	1	3	6	4.227	7.045	No	N/A	N/A
VFD015C23A-21	2	5	10	2.536	4.227	No	DR005L0254	15
VFD022C23A-21	3	8	16	1.585	2.642	No	DR008L0159	30
VFD037C23A-21	5	11	22	1.152	1.922	No	DR011L0115	33
VFD055C23A-21	7.5	17	34	0.746	1.243	No	DR017LP746	34
VFD075C23A-21	10	25	50	0.507	0.845	No	DR025LP507	50
VFD110C23A-21	15	33	66	0.32	0.534	No	DR033LP320	50
VFD150C23A-21	20	49	98	0.216	0.359	No	DR049LP215	62
VFD185C23A-21	25	65	130	0.163	0.271	No	DR065LP162	70
VFD220C23A-21	30	75	150	0.169	0.282	No	DR075LP170	80
VFD300C23A-00 VFD300C23A-21	40	90	180	0.141	0.235	Yes	DR090LP141	80
VFD370C23A-00 VFD370C23A-21	50	120	240	0.106	0.176	Yes	DR146LP087	110
VFD450C23A-00 VFD450C23A-21	60	146	292	0.087	0.145	Yes	DR146LP087	110
VFD550C23A-00 VFD550C23A-21	75	180	360	0.07	0.117	Yes	DR180LP070	125
VFD750C23A-00 VFD750C23A-21	100	215	430	0.059	0.098	Yes	DR215LP059	150
VFD900C23A-00 VFD900C23A-21	125	255	510	0.049	0.083	Yes	DR276LP049	210

Table 7-49

380V–460V, 50/60 Hz / Heavy Duty

Model	HP	Rated current [Arms]	Saturation current [Arms]	3% impedance [mH]	5% impedance [mH]	Built-in DC reactor	Output AC reactor Delta part #	Heat Dissipation (W)
VFD007C43A-21	1	3	5.4	8.102	13.502	No	DR003L0810	13
VFD015C43A-21	2	4	7.2	6.077	10.127	No	DR004L0607	18
VFD022C43A-21	3	6	10.8	4.050	6.752	No	DR006L0405	22
VFD037C43A-21	5	9	16.2	2.700	4.501	No	DR009L0270	35
VFD040C43A-21	5	10.5	18.9	2.315	3.858	No	DR010L0231	40

Model	HP	Rated current [Arms]	Saturation current [Arms]	3% impedance [mH]	5% impedance [mH]	Built-in DC reactor	Output AC reactor Delta part #	Heat Dissipation (W)
VFD055C43A-21	7.5	12	21.6	2.025	3.375	No	DR012L0202	45
VFD075C43A-21	10	18	32.4	1.174	1.957	No	DR018L0117	48
VFD110C43A-21	15	24	43.2	0.881	1.468	No	DR024LP881	52
VFD150C43A-21	20	32	57.6	0.66	1.101	No	DR032LP660	66
VFD185C43A-21	25	38	68.4	0.639	1.066	No	DR038LP639	70
VFD220C43A-21	30	45	81	0.541	0.900	No	DR045LP541	85
VFD300C43A-21	40	60	108	0.405	0.675	No	DR060LP405	85
VFD370C43S-00 VFD370C43S-21	50	73	131.4	0.334	0.555	Yes	DR073LP334	110
VFD450C43S-00 VFD450C43S-21	60	91	163.8	0.267	0.445	Yes	DR091LP267	130
VFD550C43A-00 VFD550C43A-21	75	110	198	0.221	0.368	Yes	DR110LP221	150
VFD750C43A-00 VFD750C43A-21	100	150	270	0.162	0.270	Yes	DR150LP162	175
VFD900C43A-00 VFD900C43A-21	125	180	324	0.135	0.225	Yes	DR180LP135	195
VFD1100C43A-00 VFD1100C43A-21	150	220	396	0.110	0.184	Yes	DR220LP110	235
VFD1320C43A-00 VFD1320C43A-21	175	260	468	0.098	0.162	Yes	DR260LP098	285
VFD1600C43A-00 VFD1600C43A-21	215	310	558	0.078	0.131	Yes	DR310LP078	300
VFD1850C43A-00 VFD1850C43A-21	250	370	666	0.066	0.109	Yes	DR370LP066	345
VFD2000C43A-00 VFD2000C43A-21	270	395	474	0.061	0.1	Yes	DR370LP066*1	410
VFD2200C43A-00 VFD2200C43A-21	300	460	828	0.054	0.090	Yes	DR460LP054	410
VFD2500C43A-00 VFD2500C43A-21	340	481	578	0.052	0.086	Yes	DR460LP054*1	440
VFD2800C43A-00 VFD2800C43C-21	375	550	990	0.044	0.074	Yes	DR550LP044	440
VFD3150C43A-00 VFD3150C43C-21	420	616	1108.8	0.039	0.066	Yes	DR616LP039	465
VFD3550C43A-00 VFD3550C43C-21	475	683	1229.4	0.036	0.060	Yes	DR683LP036	495
VFD4000C43A-00 VFD4000C43A-21	536	770	924	0.028	0.047	Yes	DR866LP028	600
VFD4500C43A-00 VFD4500C43C-21	600	866	1558.8	0.028	0.047	Yes	DR866LP028	600
VFD5000C43A-00 VFD5000C43C-21	650	930	1674	0.026	0.044	Yes	N/A	N/A
VFD5600C43A-00 VFD5600C43C-21	750	1094	1969.2	0.022	0.037	Yes	N/A	N/A
*1: The inductance value for the above applications of Delta's reactors will be close to, but less than 3%.								

Table 7-50

380V–460V, 50/60 Hz / Super Heavy Duty

Model	HP	Rated current [Arms]	Saturation current [Arms]	3% impedance [mH]	5% impedance [mH]	Built-in DC reactor	Output AC reactor Delta part #	Heat Dissipation (W)
VFD007C43A-21	1	1.7	3.4	14.298	23.827	No	N/A	N/A
VFD015C43A-21	2	3	6	8.102	13.502	No	DR003L0810	13
VFD022C43A-21	3	4	8	6.077	10.127	No	DR004L0607	18
VFD037C43A-21	5	6	12	4.05	6.752	No	DR006L0405	22
VFD040C43A-21	5	9	18	2.7	4.501	No	DR009L0270	35
VFD055C43A-21	7.5	10.5	21	2.315	3.858	No	DR010L0231	40
VFD075C43A-21	10	12	24	2.025	3.375	No	DR012L0202	45
VFD110C43A-21	15	18	36	1.174	1.957	No	DR018L0117	48
VFD150C43A-21	20	24	48	0.881	1.468	No	DR024LP881	52
VFD185C43A-21	25	32	64	0.66	1.101	No	DR032LP660	66
VFD220C43A-21	30	38	76	0.639	1.066	No	DR038LP639	70
VFD300C43A-21	40	45	90	0.541	0.9	No	DR045LP541	85
VFD370C43S-00 VFD370C43S-21	50	60	120	0.405	0.675	Yes	DR060LP405	85
VFD450C43S-00 VFD450C43S-21	60	73	146	0.334	0.555	Yes	DR073LP334	110
VFD550C43A-00 VFD550C43A-21	75	91	182	0.267	0.445	Yes	DR091LP267	130
VFD750C43A-00 VFD750C43A-21	100	110	220	0.221	0.368	Yes	DR110LP221	150
VFD900C43A-00 VFD900C43A-21	125	150	300	0.162	0.27	Yes	DR150LP162	175
VFD1100C43A-00 VFD1100C43A-21	150	180	360	0.135	0.225	Yes	DR180LP135	195
VFD1320C43A-00 VFD1320C43A-21	175	220	440	0.11	0.184	Yes	DR220LP110	235
VFD1600C43A-00 VFD1600C43A-21	215	260	520	0.098	0.162	Yes	DR260LP098	285
VFD1850C43A-00 VFD1850C43A-21	250	310	620	0.078	0.131	Yes	DR310LP078	300
VFD2000C43A-00 VFD2000C43A-21	270	335	536	0.072	0.12	Yes	DR370LP066*1	345
VFD2200C43A-00 VFD2200C43A-21	300	370	740	0.066	0.109	Yes	DR370LP066	345
VFD2500C43A-00 VFD2500C43A-21	340	415	664	0.058	0.10	Yes	DR460LP054*1	410
VFD2800C43A-00 VFD2800C43C-21	375	460	920	0.054	0.09	Yes	DR460LP054	410
VFD3150C43A-00 VFD3150C43C-21	420	550	1100	0.044	0.074	Yes	DR550LP044	440
VFD3550C43A-00 VFD3550C43C-21	475	616	1232	0.039	0.066	Yes	DR616LP039	465
VFD4000C43A-00 VFD4000C43A-21	530	683	1092.8	0.036	0.06	Yes	DR683LP036	495

Model	HP	Rated current [Arms]	Saturation current [Arms]	3% impedance [mH]	5% impedance [mH]	Built-in DC reactor	Output AC reactor Delta part #	Heat Dissipation (W)
VFD4500C43A-00 VFD4500C43C-21	600	683	1366	0.036	0.06	Yes	DR683LP036	495
VFD5000C43A-00 VFD5000C43C-21	650	866	1732	0.028	0.047	Yes	DR866LP028	600
VFD5600C43A-00 VFD5600C43C-21	750	930	1860	0.026	0.044	Yes	N/A	N/A
*1: The inductance value for the above applications of Delta's reactors will be close to, but less than 3%.								

Table 7-51

575V, 50/60 Hz, Three-phase

Model	HP	Rated current [Arms]			Saturation current [Arms]	3% impedance [mH]			5% impedance [mH]		
		Light load	Normal load	Heavy load		Light load	Normal load	Heavy load	Light load	Normal load	Heavy load
VFD015C53A-21	2	3	2.5	2.1	4.2	8.806	10.567	12.580	14.677	17.612	20.967
VFD022C531-21	3	4.3	3.6	3	5.9	6.144	7.338	8.806	10.239	12.230	14.677
VFD037C53A-21	5	6.7	5.5	4.6	9.1	3.943	4.803	5.743	6.572	8.005	9.572
VFD055C53A-21	7.5	9.9	8.2	6.9	13.7	2.668	3.222	3.829	4.447	5.369	6.381
VFD075C53A-21	10	12.1	10	8.3	16.5	2.183	2.642	3.183	3.639	4.403	5.305
VFD110C53A-21	15	18.7	15.5	13	25.7	1.413	1.704	2.032	2.355	2.841	3.387
VFD150C53A-21	20	24.2	20	16.8	33.3	1.092	1.321	1.572	1.819	2.201	2.621

Table 7-52

690V, 50/60 Hz, Three-phase

Model	HP	Rated current [Arms]			Saturation current [Arms]			3% impedance [mH]			5% impedance [mH]		
		Light load	Normal load	Heavy load	Light load	Normal load	Heavy load	Light load	Normal load	Heavy load	Light load	Normal load	Heavy load
VFD185C63B-21	25	24	20	14	28.8	30.0	25.2	1.585	1.902	2.717	2.642	3.170	4.529
VFD220C63B-21	30	30	24	20	36.0	36.0	36.0	1.268	1.585	1.902	2.113	2.642	3.170
VFD300C63B-21	40	36	30	24	43.2	45.0	43.2	1.057	1.268	1.585	1.761	2.113	2.642
VFD370C63B-21	50	45	36	30	54.0	54.0	54.0	0.845	1.057	1.268	1.409	1.761	2.113
VFD450C63B-00 VFD450C63B-21	60	54	45	36	64.8	67.5	64.8	0.704	0.845	1.057	1.174	1.409	1.761
VFD550C63B-00 VFD550C63B-21	75	67	54	45	80.4	81.0	81.0	0.568	0.704	0.845	0.946	1.174	1.409
VFD750C63B-00 VFD750C63B-21	100	86	67	54	103.2	100.5	97.2	0.442	0.568	0.704	0.737	0.946	1.174
VFD900C63B-00 VFD900C63B-21	125	104	86	67	124.8	129.0	120.6	0.366	0.442	0.568	0.610	0.737	0.946
VFD1100C63B-00 VFD1100C63B-21	150	125	104	86	150.0	156.0	154.8	0.304	0.366	0.442	0.507	0.610	0.737
VFD1320C63B-00 VFD1320C63B-21	175	150	125	104	180.0	187.5	187.2	0.254	0.304	0.366	0.423	0.507	0.610
VFD1600C63B-00 VFD1600C63B-21	215	180	150	125	216.0	225.0	225.0	0.211	0.254	0.304	0.352	0.423	0.507
VFD2000C63B-00 VFD2000C63B-21	270	220	180	150	264.0	270.0	270.0	0.173	0.211	0.254	0.288	0.352	0.423
VFD2500C63B-00 VFD2500C63B-21	335	290	220	180	348.0	330.0	324.0	0.131	0.173	0.211	0.219	0.288	0.352

Model	HP	Rated current [Arms]			Saturation current [Arms]			3% impedance [mH]			5% impedance [mH]		
		Light load	Normal load	Heavy load	Light load	Normal load	Heavy load	Light load	Normal load	Heavy load	Light load	Normal load	Heavy load
VFD3150C63B-00 VFD3150C63B-21	425	350	290	220	420.0	435.0	396.0	0.109	0.131	0.173	0.181	0.219	0.288
VFD4000C63B-00 VFD4000C63B-21	530	430	350	290	516.0	525.0	522.0	0.088	0.109	0.131	0.147	0.181	0.219
VFD4500C63B-00 VFD4500C63B-21	600	465	385	310	558.0	577.5	558.0	0.082	0.099	0.123	0.136	0.165	0.205
VFD5600C63B-00 VFD5600C63B-21	745	590	465	420	708.0	697.5	756.0	0.064	0.082	0.091	0.107	0.136	0.151
VFD6300C63B-00 VFD6300C63B-21	850	675	675	675	810.0	1012.5	1215.0	0.056	0.056	0.056	0.094	0.094	0.094

Table 7-53

AC output reactor dimensions and specification:

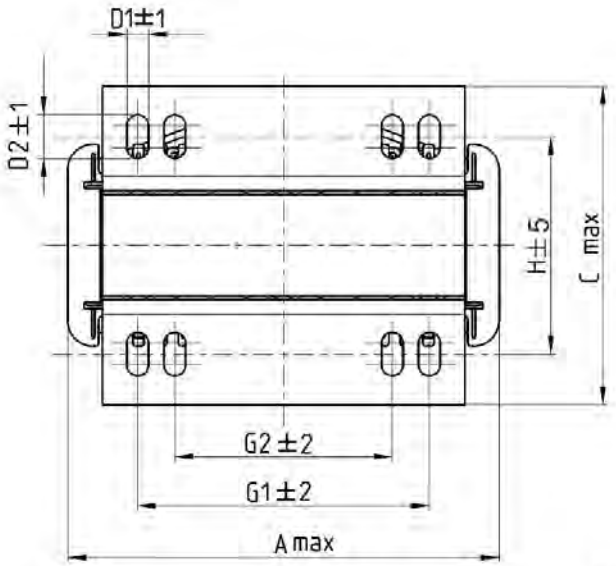

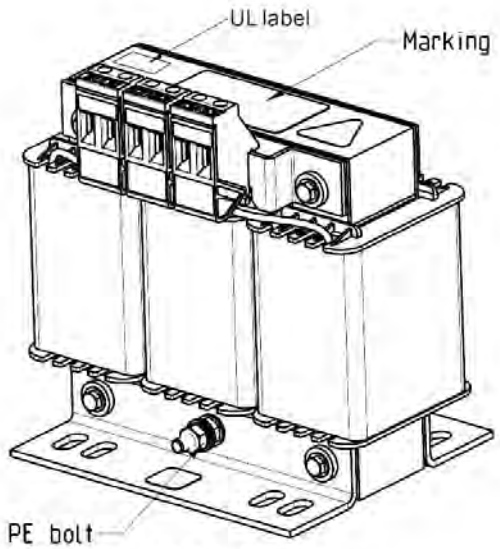

Torque: 10.2–12.2 kg-cm / [8.9–10.6 lb-in] / [1.0–1.2 Nm]

Torque: 6.1–8.2 kg-cm / [5.3–7.1 lb-in] / [0.6–0.8 Nm]

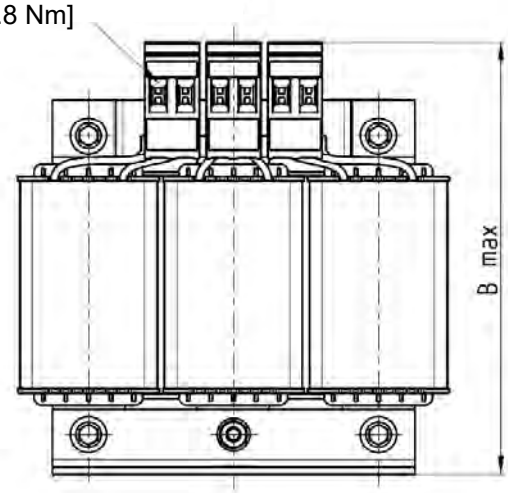

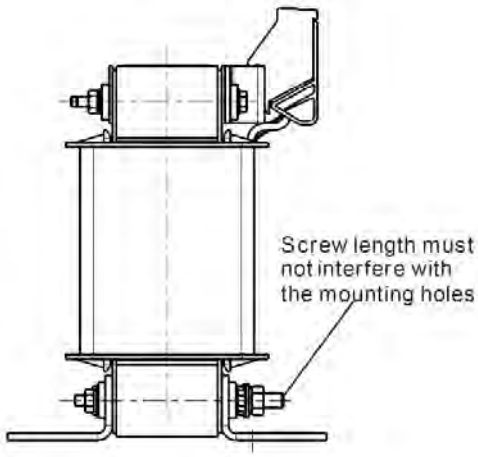

Unit: mm

Output AC reactor Delta part #	A	B	C	D1*D2	H	H1	H2	PE
DR005L0254	96	110	70	6*9	42	60	40	M4
DR008L0159	120	135	96	6*12	60	80.5	60	M4
DR011L0115	120	135	96	6*12	60	80.5	60	M4
DR017LP746	120	135	105	6*12	65	80.5	60	M4
DR025LP507	150	160	120	6*12	88	107	75	M4
DR033LP320	150	160	120	6*12	88	107	75	M4

Table 7-54

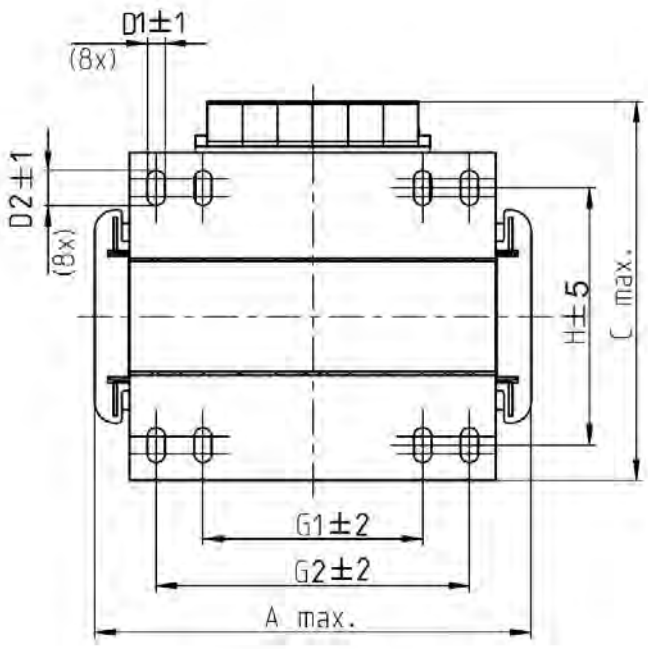

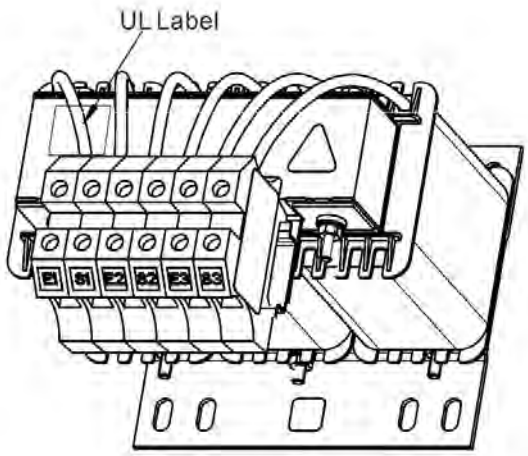

Terminal 16 mm^2
Torque: 12.2–14.3 kg-cm / [10.6–12.4 lb-in] / [1.2–1.4 Nm]

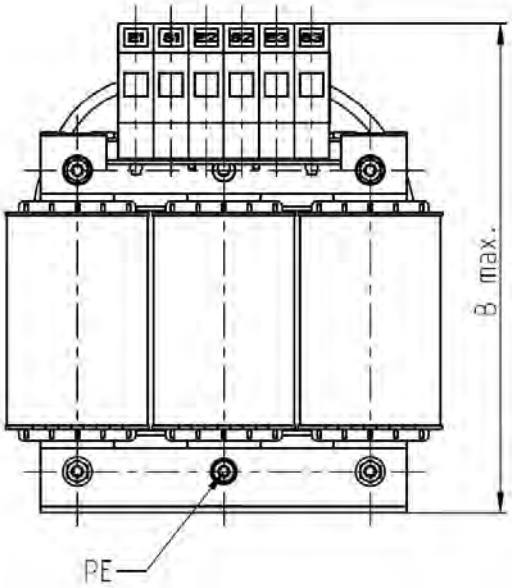

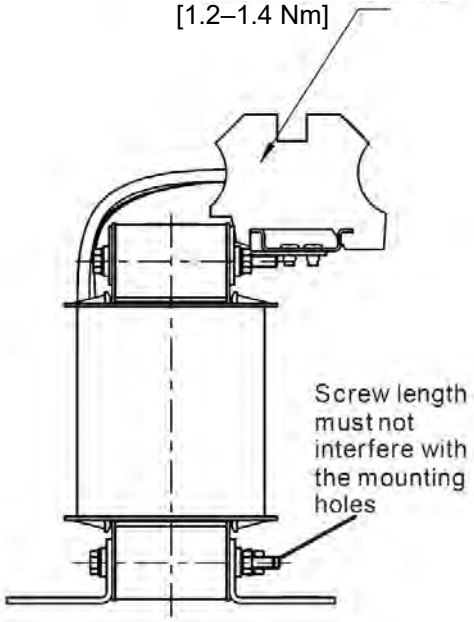

Unit: mm

Output AC reactor Delta part #	A	B	C	D1*D2	H	G	G1	Q	M	PE
DR049LP215	180	205	175	6*12	115	85	122	16	1.2–1.4	M4
DR065LP162	180	215	185	6*12	115	85	122	35	2.5–3.0	M4

Table 7-55

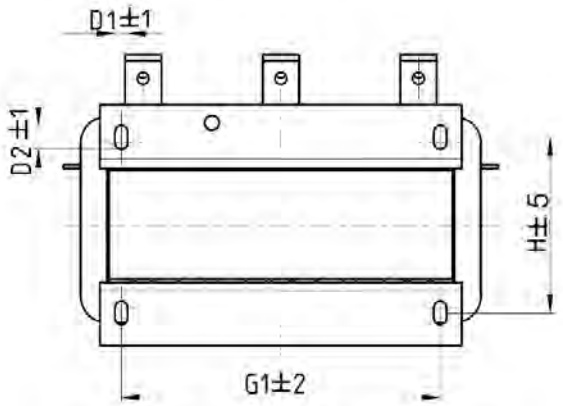

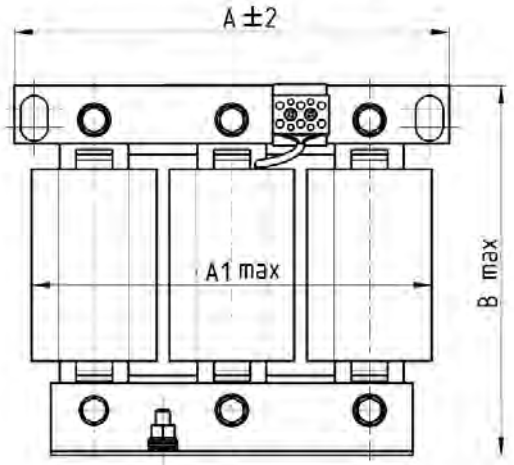

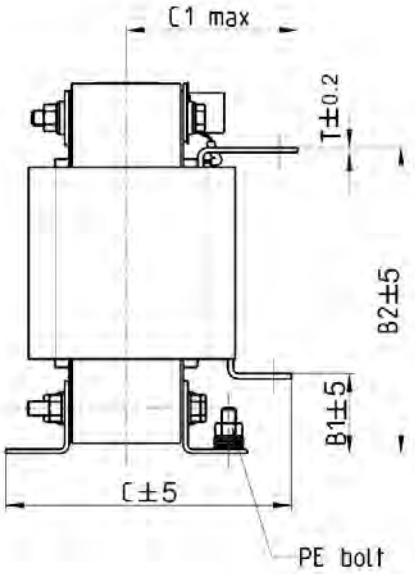

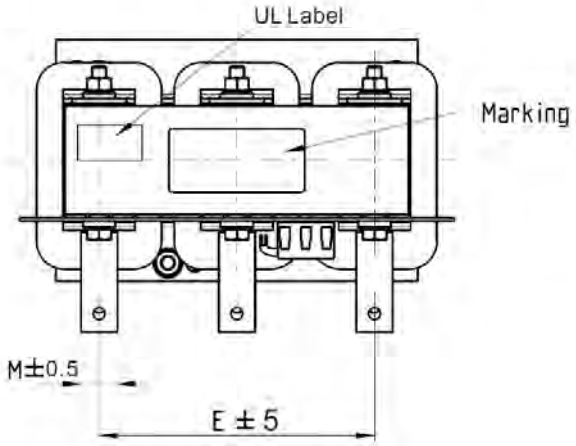

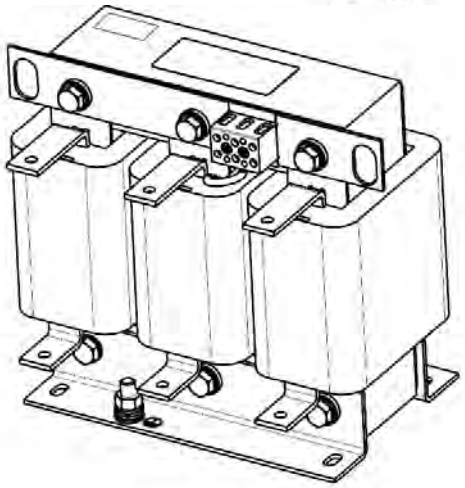

Unit: mm

Output AC reactor Delta part #	A	A1	B	B1	B2	C	C1	D1*D2	E	G1	H	M*T
DR075LP170	240	228	215	44	170	151	100	7*13	152	176	85	20*3
DR090LP141	240	228	215	44	170	151	100	7*13	152	176	85	20*3
DR146LP087	240	228	240	45	202	165	110	7*13	152	176	97	30*3
DR180LP070	250	240	250	46	205	175	110	11*18	160	190	124	30*5
DR215LP059	250	240	275	51	226	180	120	11*18	160	190	124	30*5

Table 7-56

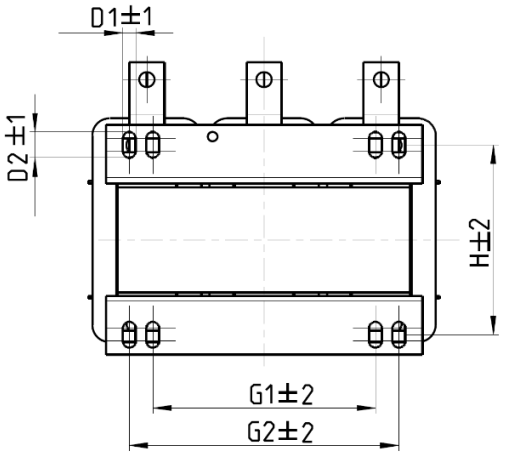

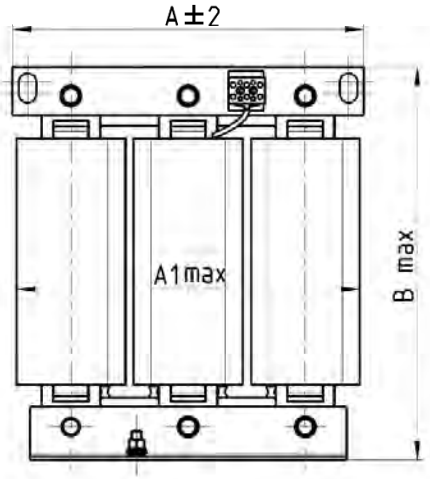

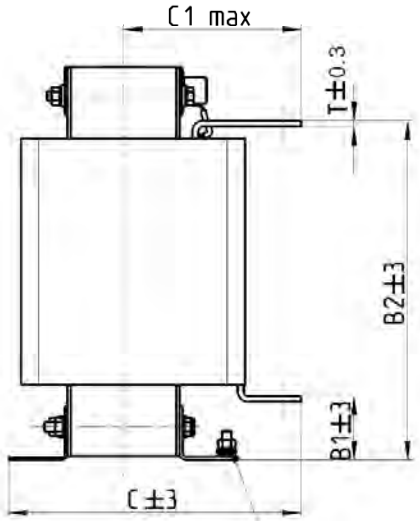

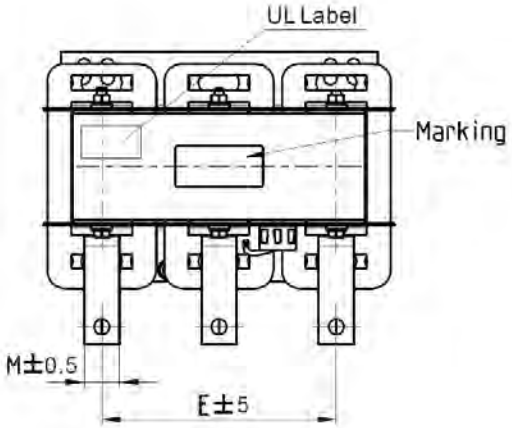

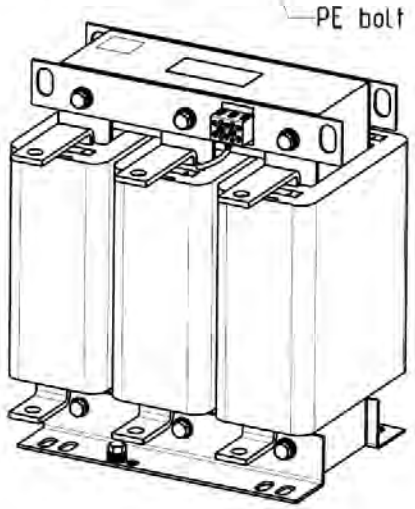

Unit: mm

Output AC reactor Delta part #	A	A1	B	B1	B2	C	C1	D1*D2	E	H	M*T
DR276AP049	270	260	320	50	265	200	140	10*18	176	106	30*5
DR346LP037	270	265	340	50	285	200	140	10*18	176	106	30*5

Table 7-57

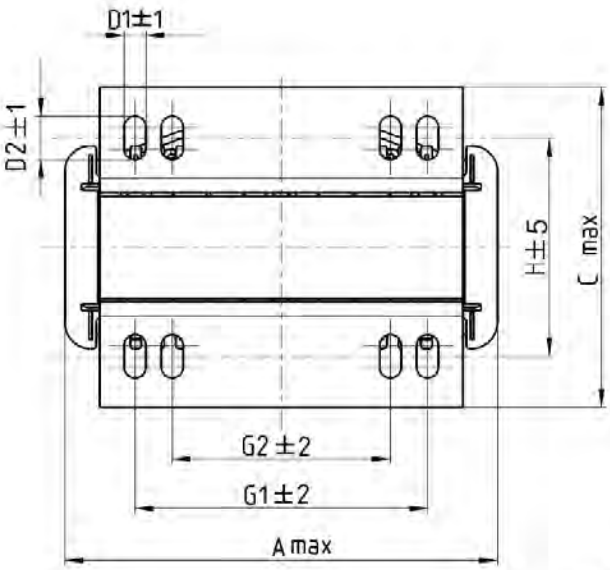

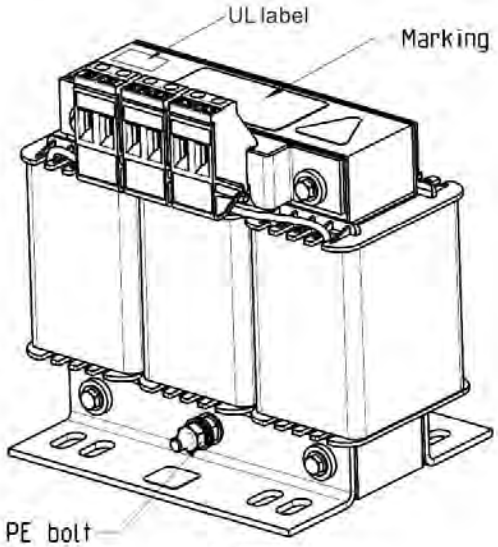

Torque: 10.2–12.2 kg-cm / [8.9–10.6 lb-in] / [1.0–1.2 Nm]

Torque: 6.1–8.2 kg-cm / [5.3–7.1 lb-in] / [0.6–0.8 Nm]

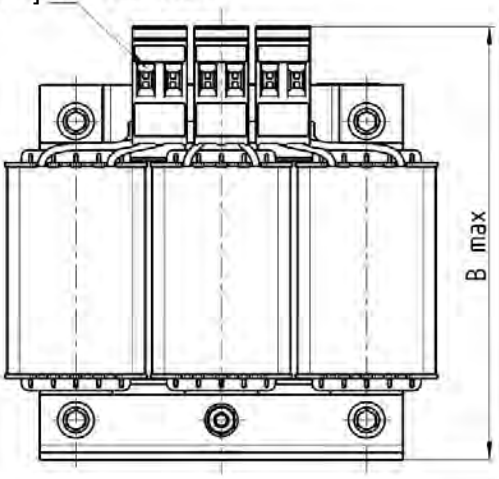

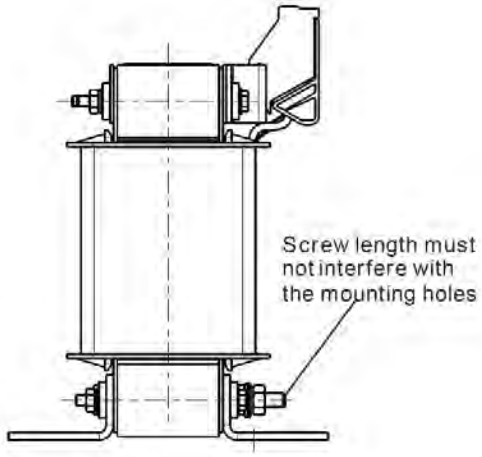

Unit: mm

Output AC reactor Delta part #	A	B	C	D1*D2	H	G1	G2	PE
DR003L0810	96	115	65	6*9	42	60	40	M4
DR004L0607	120	135	95	6*12	60	80.5	60	M4
DR006L0405	120	135	95	6*12	60	80.5	60	M4
DR009L0270	150	160	100	6*12	74	107	75	M4
DR010L0231	150	160	115	6*12	88	107	75	M4
DR012L0202	150	160	115	6*12	88	107	75	M4
DR018L0117	150	160	115	6*12	88	107	75	M4
DR024LP881	150	160	115	6*12	88	107	75	M4
DR032LP660	180	190	145	6*12	114	122	85	M6

Table 7-58

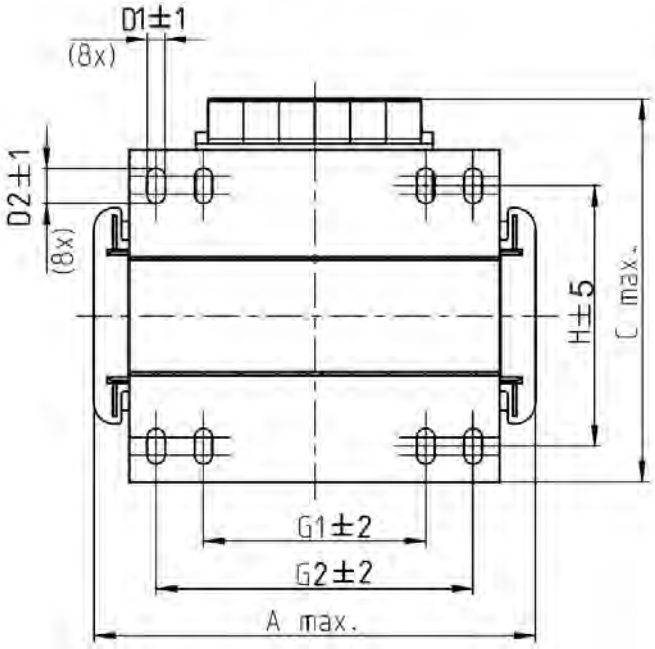

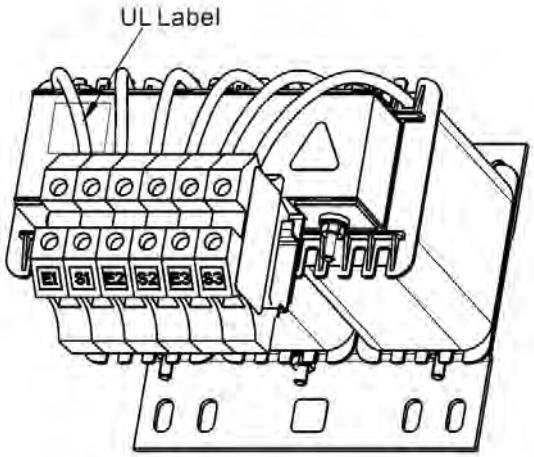

Terminals 16 mm^2
Torque: 12.2–14.3 kg-cm / [10.6–12.4 lb-in] / [1.2–1.4 Nm]

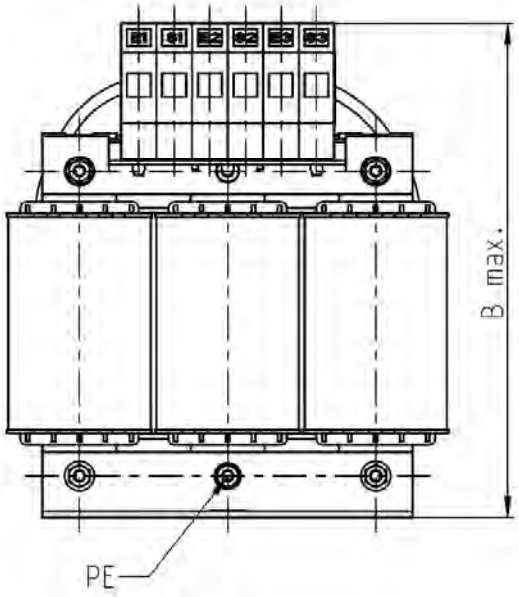

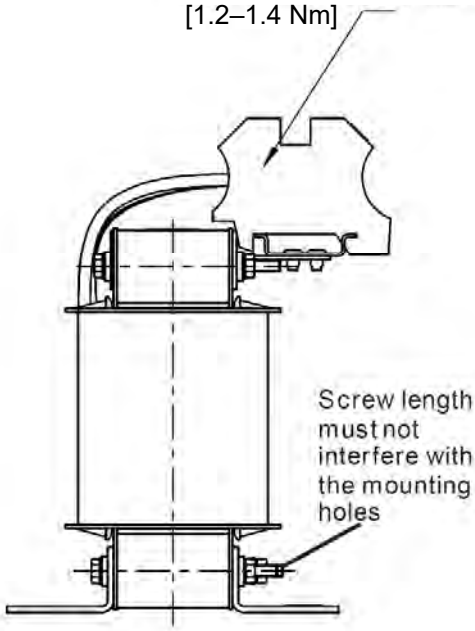

Unit: mm

Output AC reactor Delta part #	A	B	C	D1*D2	H	G1	G2	PE
DR038LP639	180	205	170	6*12	115	85	122	M4
DR045LP541	235	245	150	7*13	85	/	176	M6

Table 7-59

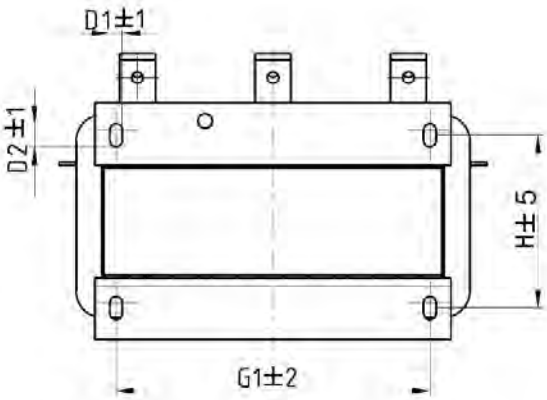

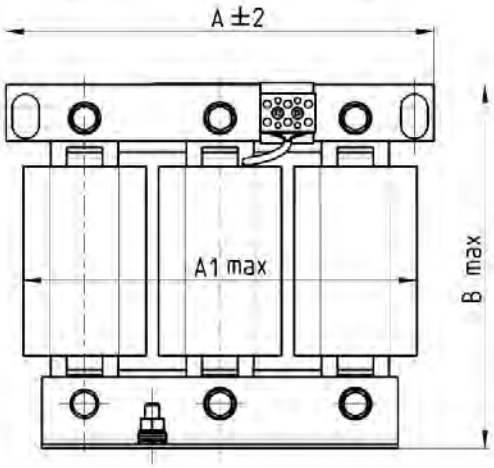

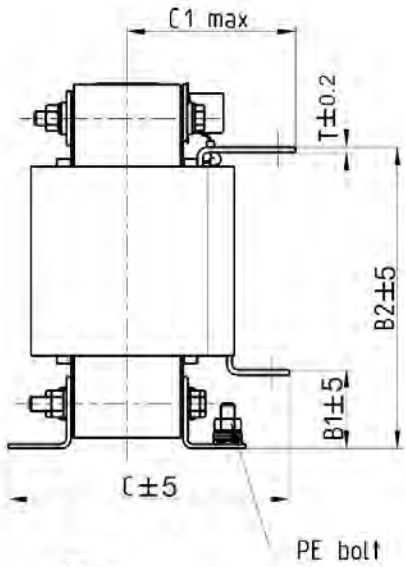

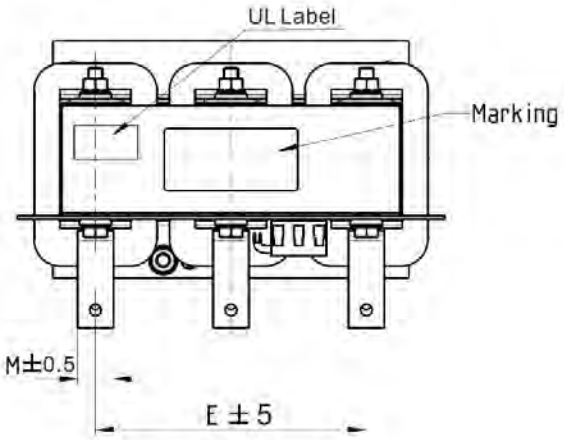

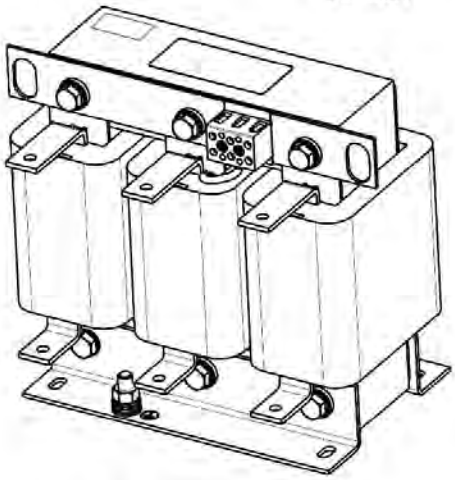

Unit: mm

Output AC reactor Delta part #	A	A1	B	B1	B2	C	C1	D1*D2	E	G1	H	M*T
DR060LP405	240	228	215	44	170	163	110	7*13	152	176	97	20*3
DR073LP334	250	235	235	44	186	174	115	11*18	160	190	124	20*3
DR091LP267	250	240	235	44	186	174	115	11*18	160	190	124	20*3
DR110LP221	270	260	245	50	192	175	115	10*18	176	200	106	20*3

Table 7-60

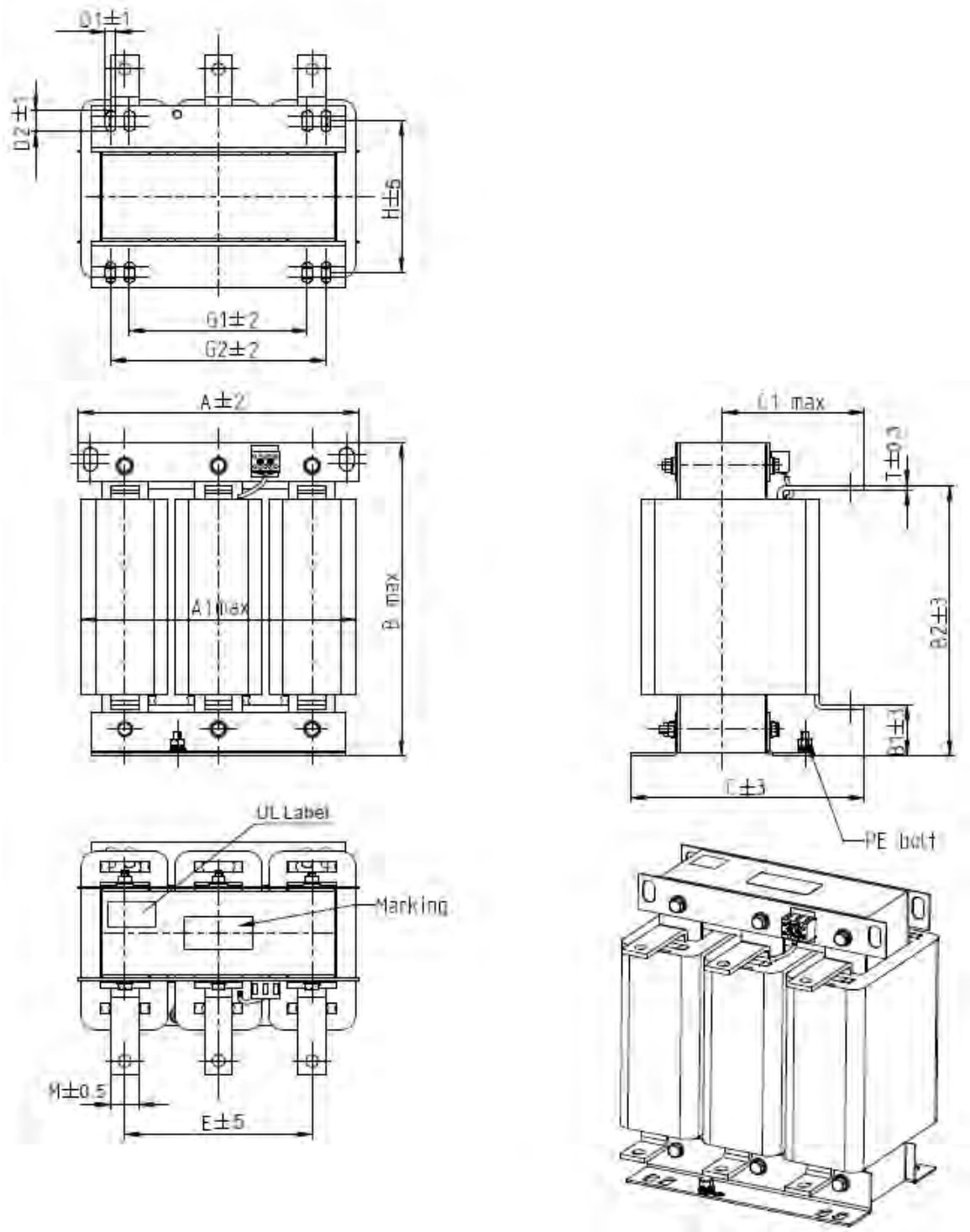

Unit: mm

Output AC reactor Delta part #	A	A1	B	B1	B2	C	C1	D1*D2	E	G1	G2	H	M*T
DR150LP162	270	264	265	51	208	192	125	10*18	176	200	/	118	30*3
DR180LP135	300	295	310	55	246	195	125	11*22	200	230	190	142	30*3
DR220LP110	300	298	310	57	248	210	140	11*22	200	230	190	142	30*5
DR260LP098	300	295	330	56	270	227	140	11*22	200	230	190	160	30*5
DR310LP078	300	298	350	54	288	233	145	11*22	200	230	190	160	30*5
DR370LP066	300	298	350	54	289	268	170	11*22	200	230	190	185	40*5

Table 7-61

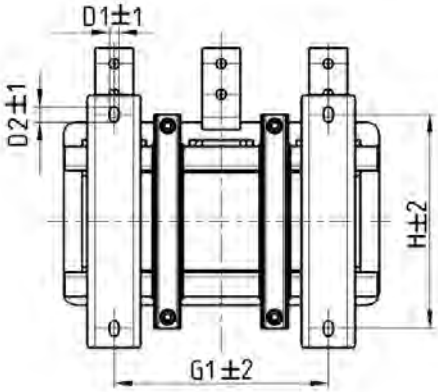

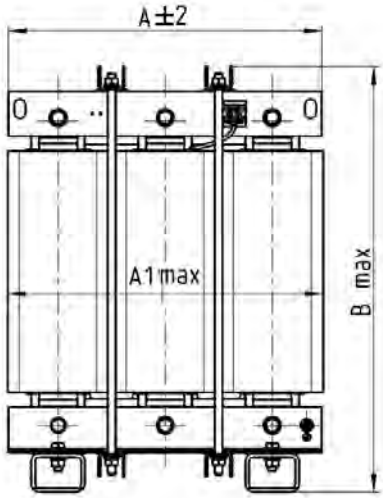

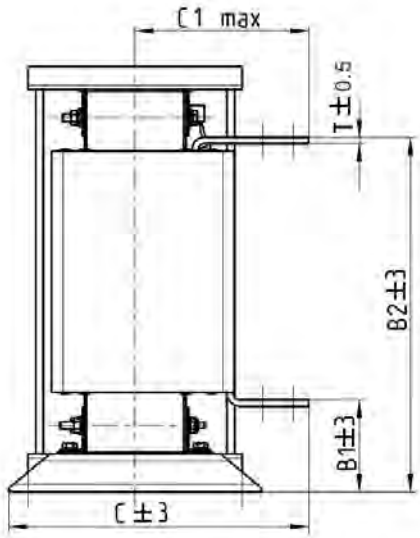

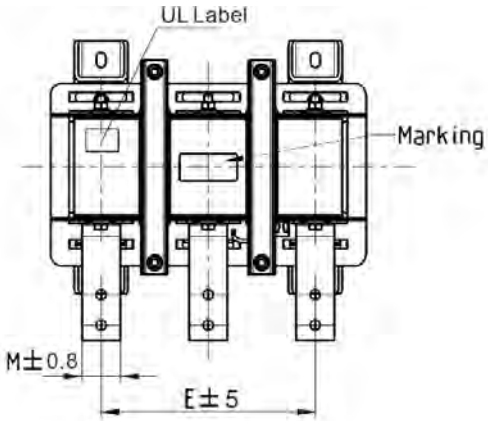

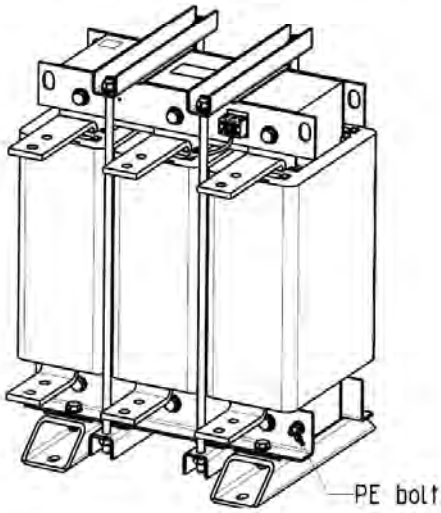

Unit: mm

Output AC reactor Delta part #	A	A1	B	B1	B2	C	C1	D1*D2	E	G1	H	M*T
DR460LP054	360	355	510	106	401	346	215	12*20	240	240	240	50*5
DR550LP044	360	355	510	106	401	358	220	12*20	240	240	250	50*5
DR616LP039	360	355	510	110	401	376	230	12*20	240	240	270	50*8
DR683LP036	360	355	510	110	401	396	240	12*20	240	240	290	50*8
DR866LP028	410	418	570	120	464	402	245	12*20	280	280	290	50*8

Table 7-62

Motor Cable Length

1. Consequence of leakage current on the motor

If the cable length is too long, the stray capacitance between cables increase and may cause leakage current. In this case, It activates the over-current protection, increases leakage current, or may affect the current display. The worst case is that it may damage the AC motor drive. If more than one motor is connected to one AC motor drive, the total wiring length should be the sum of the wiring length from AC motor drive to each motor.

For the 460V series AC motor drive, when you install an overload thermal relay between the drive and the motor to protect the motor from overheating, the connecting cable must be shorter than 50 m; however, an overload thermal relay malfunction may still occur. To prevent the malfunction, install an output reactor (optional) to the drive or lower the carrier frequency setting (see Pr.00-17 Carrier Frequency).

2. Consequence of the surge voltage on the motor

When a motor is driven by a PWM-type AC motor drive, the motor terminals experience surge voltages (dv/dt) due to power transistor conversion of AC motor drive. When the motor cable is very long (especially for the 460V series), surge voltages (dv/dt) may damage the motor insulation and bearing. To prevent this, follow these rules:

a. Use a motor with enhanced insulation.
b. Reduce the cable length between the AC motor drive and motor to suggested values.
c. Connect an output reactor (optional) to the output terminals of the AC motor drive

Refer to the following tables for the suggested motor shielded cable length. Use a motor with a rated voltage ≤ 500 V_{AC} and insulation level ≥ 1.35 kV in accordance with IEC 60034-17.

230V Models	Rated current [HD, Arms]	Without an AC output reactor		With an AC output reactor	
		Shielded Cable [meter]	Non-shielded cable [meter]	Shielded Cable [meter]	Non-shielded cable [meter]
VFD007C23A-21	5	50	75	75	115
VFD015C23A-21	8	50	75	75	115
VFD022C23A-21	11	50	75	75	115
VFD037C23A-21	17	50	75	75	115
VFD055C23A-21	25	50	75	75	115
VFD075C23A-21	33	100	150	150	225
VFD110C23A-21	49	100	150	150	225
VFD150C23A-21	65	100	150	150	225
VFD185C23A-21	75	100	150	150	225
VFD220C23A-21	90	100	150	150	225
VFD300C23A-00 VFD300C23A-21	120	100	150	150	225
VFD370C23A-00 VFD370C23A-21	146	100	150	150	225
VFD450C23A-00 VFD450C23A-21	180	150	225	225	325
VFD550C23A-00 VFD550C23A-21	215	150	225	225	325
VFD750C23A-00 VFD750C23A-21	255	150	225	225	325
VFD900C23A-00 VFD900C23A-21	346	150	225	225	325

Table 7-63

460V Models	Rated current [HD, Arms]	Without an AC output reactor		With an AC output reactor	
		Shielded Cable [meter]	Non-shielded cable [meter]	Shielded Cable [meter]	Non-shielded cable [meter]
VFD007C43A-21	3	50	75	75	115
VFD015C43A-21	4	50	75	75	115
VFD022C43A-21	6	50	75	75	115
VFD037C43A-21	9	50	75	75	115
VFD040C43A-21	10.5	50	75	75	115
VFD055C43A-21	12	50	75	75	115
VFD075C43A-21	18	100	150	150	225
VFD110C43A-21	24	100	150	150	225
VFD150C43A-21	32	100	150	150	225
VFD185C43A-21	38	100	150	150	225
VFD220C43A-21	45	100	150	150	225
VFD300C43A-21	60	100	150	150	225
VFD370C43S-00 VFD370C43S-21	73	100	150	150	225
VFD450C43S-00 VFD450C43S-21	91	150	225	225	325
VFD550C43A-00 VFD550C43A-21	110	150	225	225	325
VFD750C43A-00 VFD750C43A-21	150	150	225	225	325
VFD900C43A-00 VFD900C43A-21	180	150	225	225	325
VFD1100C43A-00 VFD1100C43A-21	220	150	225	225	325
VFD1320C43A-00 VFD1320C43A-21	260	150	225	225	325
VFD1600C43A-00 VFD1600C43A-21	310	150	225	225	325
VFD1850C43A-00 VFD1850C43A-21	370	150	225	225	325
VFD2000C43A-00 VFD2000C43A-21	395	150	225	225	325
VFD2200C43A-00 VFD2200C43A-21	460	150	225	225	325
VFD2500C43A-00 VFD2500C43A-21	481	150	225	225	325
VFD2800C43A-00 VFD2700C43C-21	550	150	225	225	325
VFD3150C43A-00 VFD3150C43C-21	616	150	225	225	325
VFD3550C43A-00 VFD3550C43C-21	683	150	225	225	325
VFD4000C43A-00 VFD4000C43A-21	770	150	225	225	325
VFD4500C43A-00 VFD4500C43C-21	866	150	225	225	325
VFD5000C43A-00 VFD5000C43C-21	930	150	225	225	325
VFD5600C43A-00 VFD5600C43C-21	1094	150	225	225	325

Table 7-64

460V	Rated current [HD, Arms]	Without an AC output reactor		With an AC output reactor	
Built-in EMC Filter drive model		Shielded Cable [meter]	Non-shielded cable [meter]	Shielded Cable [meter]	Non-shielded cable [meter]
VFD007C4EA-21	3	30	75	30	115
VFD015C4EA-21	4	30	75	30	115
VFD022C4EA-21	6	30	75	30	115
VFD037C4EA-21	9	30	75	30	115
VFD040C4EA-21	10.5	30	75	30	115
VFD055C4EA-21	12	30	75	30	115
VFD075C4EA-21	18	50	150	50	225
VFD110C4EA-21	24	50	150	50	225
VFD150C4EA-21	32	50	150	50	225
VFD185C4EA-21	38	50	150	50	225
VFD220C4EA-21	45	50	150	50	225
VFD300C4EA-21	60	50	150	50	225

Table 7-65

575V	kW	HP	Rated Current	Without an AC output reactor		With an AC output reactor	
Model			Normal Duty [Arms]	Shielded Cable [meter]	Non-shielded Cable [meter]	Shielded Cable [meter]	Non-shielded Cable [meter]
VFD015C53A-21	1.5	2	2.5	30	35	20	45
VFD022C53A-21	2.2	3	3.6	30	35	20	45
VFD037C53A-21	3.7	5	5.5	30	35	20	45
VFD055C53A-21	5.5	7.5	8.2	30	35	20	45
VFD075C53A-21	7.5	10	10	30	35	20	45
VFD110C53A-21	11	15	15.5	30	35	20	45
VFD150C53A-21	15	20	20	30	35	20	45

Table 7-66

690V	kW	HP	Rated Current	Without AC reactor		With AC reactor	
Model			Normal Duty [Arms]	Shielded Cable [meter]	Non-shielded Cable [meter]	Shielded Cable [meter]	Non-shielded Cable [meter]
VFD185C63B-21	18.5	25	20	20	35	30	45
VFD220C63B-21	22	30	24	20	35	30	45
VFD300C63B-21	30	40	30	20	35	45	60
VFD370C63B-21	37	50	36	20	45	60	75
VFD450C63B-00/21	45	60	45	20	45	60	75
VFD550C63B-00/21	55	75	54	20	45	60	100
VFD750C63B-00/21	75	100	67	20	45	60	100
VFD900C63B-00/21	90	125	86	20	45	75	100
VFD1100C63B-00/21	110	150	104	20	45	75	100
VFD1320C63B-00/21	132	175	125	20	45	75	100
VFD1600C63B-00/21	160	215	150	20	45	90	100
VFD2000C63B-00/21	200	270	180	20	45	90	100
VFD2500C63B-00/21	250	335	220	20	45	90	100
VFD3150C63B-00/21	315	425	290	20	45	90	100
VFD4000C63B-00/21	400	530	350	20	45	90	100

690V	kW	HP	Rated Current	Without AC reactor		With AC reactor	
Model			Normal Duty [Arms]	Shielded Cable [meter]	Non-shielded Cable [meter]	Shielded Cable [meter]	Non-shielded Cable [meter]
VFD4500C63B-00/21	450	600	385	20	45	90	100
VFD5600C63B-00/21	560	745	465	20	45	75	90
VFD6300C63B-00/21	630	850	675	20	45	75	90

Table 7-67

* The table above is the suggested cable length of EMC built-in models operating under surge voltage influencing. To pass the noise emission and Electromagnetic interference certification, the cable length should follow chapter 7-7 instruction.

* 690V output motor cable length needs to comply with IEC 60034-25

Requirements on insulation level of Curve B motor

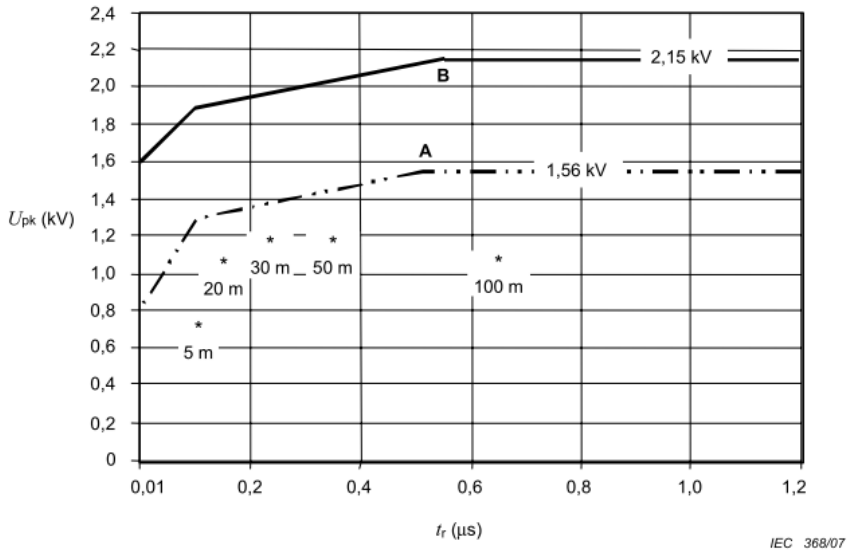

Figure 7-9

Key

A Without filters for motors up to 500 V a.c.

B Without filters for motors up to 690 V a.c.

* Examples of measured results at 415 V supply, for different lengths of steel armoured cable

Figure 14 – Limiting curves of impulse voltage U_{pk}, measured between two motor phase terminals, as a function of the *peak rise time* t_r

The t_r is defined as:

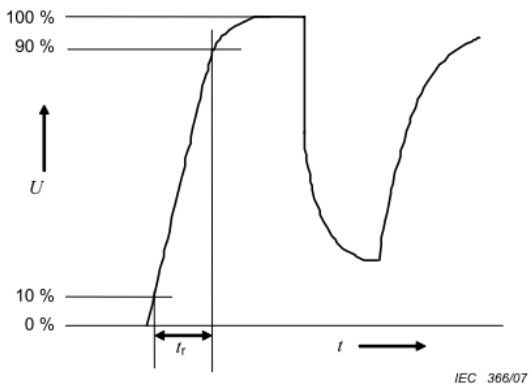

Figure 7-10

Sine-wave filter

When there is longer cable length connected between the motor drive and the motor, the damping leads to high frequency resonator, and makes impedance matching poor to enlarge the voltage reflection. This phenomenon will generate twice-input voltage in the motor side, which will easily make motor voltage overshoot to damage insulation.

To prevent this, installing sine-wave filter can transform PWM output voltage to smooth and low-ripple sine-wave, and motor cable length can be longer than 1000 meters.

Installation

Install a Sine-wave filter in series between the three output phases U V W and the motor, as shown in the figure below:

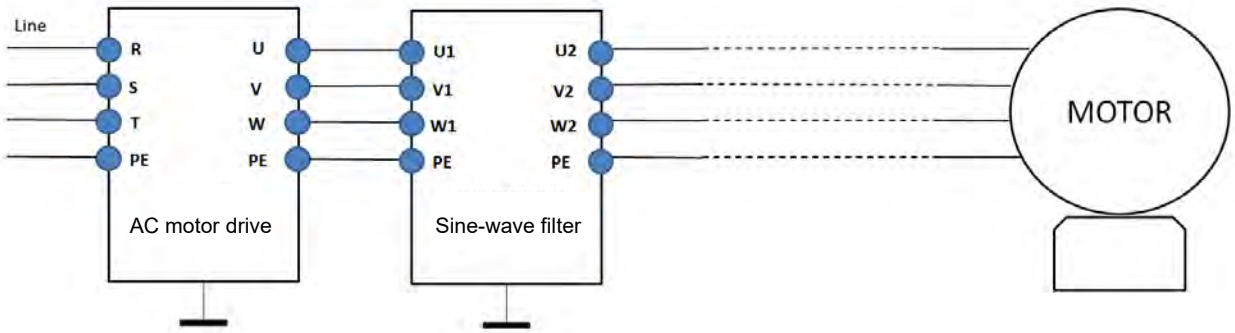

Wiring of non-shielded cable

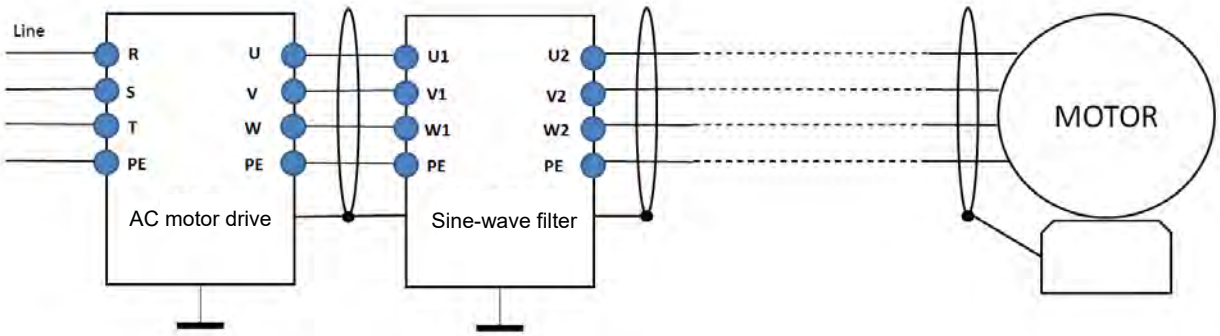

Wiring of shielded cable

Applicable Sine-wave Filters:

200V–230V, 50/60 Hz

kW	HP	Rated current [Arms]	Suggested sine-wave filter part #	Output cable length [m] (Shielded or non-shielded)
0.75	1	5	B84143V0006R227	1000
1.5	2	8	B84143V0011R227	
2.2	3	11		
3.7	5	17	B84143V0025R227	
5.5	7.5	25		
7.5	10	33	B84143V0033R227	
11	15	49	B84143V0050R227	
15	20	65	B84143V0066R227	
18.5	25	75	B84143V0075R227	
22	30	90	B84143V0095R227	
30	40	120	B84143V0132R227	
37	50	146	B84143V0180R227	
45	60	180		
55	75	215	B84143V0250R227	
75	100	255	B84143V0320R227	
90	125	346	Contact supplier EPCOS	

Table 7-68

380V–460V, 50/60 Hz

kW	HP	Rated current [Arms]	Suggested sine-wave filter part #	Output cable length [m] (Shielded or non-shielded)
0.75	1	3	B84143V0004R227	1000
1.5	2	4		
2.2	3	6	B84143V0006R227	
3.7	5	9	B84143V0011R227	
4	5	10.5		
5.5	7.5	12	B84143V0016R227	
7.5	10	18	B84143V0025R227	
11	15	24		
15	20	32	B84143V0033R227	
18.5	25	38	B84143V0050R227	
22	30	45		
30	40	60	B84143V0066R227	
37	50	73	B84143V0075R227	
45	60	91	B84143V0095R227	
55	75	110	B84143V0132R227	
75	100	150	B84143V0180R227	
90	125	180		
110	150	220	B84143V0250R227	

kW	HP	Rated current [Arms]	Suggested sine-wave filter part #	Output cable length [m] (Shielded or non-shielded)
132	175	260	B84143V0320R227	1000
160	215	310		
185	250	370	Contact supplier EPCOS	
200	270	395		
220	300	460		
250	340	481		
280	375	550		
315	420	616		
355	475	683		
400	536	770		
450	600	866		
500	650	930		
560	750	1094		

Table 7-69

Sine wave filter part #	Please refer to website: http://en.tdk.eu/inf/30/db/emc_2014/B84143V_R227.pdf
B84143V0004R227	I_R:4A, Sine-wave output filters for 3-phase systems
B84143V0006R227	I_R:6A, Sine-wave output filters for 3-phase systems
B84143V0011R227	I_R:11A, Sine-wave output filters for 3-phase systems
B84143V0016R227	I_R:16A, Sine-wave output filters for 3-phase systems
B84143V0025R227	I_R:25A, Sine-wave output filters for 3-phase systems
B84143V0033R227	I_R:33A, Sine-wave output filters for 3-phase systems
B84143V0050R227	I_R:50A, Sine-wave output filters for 3-phase systems
B84143V0066R227	I_R:66A, Sine-wave output filters for 3-phase systems
B84143V0075R227	I_R:75A, Sine-wave output filters for 3-phase systems
B84143V0095R227	I_R:95A, Sine-wave output filters for 3-phase systems
B84143V0132R227	I_R:132A, Sine-wave output filters for 3-phase systems
B84143V0180R227	I_R:180A, Sine-wave output filters for 3-phase systems
B84143V0250R227	I_R:250A, Sine-wave output filters for 3-phase systems
B84143V0320R227	I_R:320A, Sine-wave output filters for 3-phase systems

Table 7-70

7-5 Zero Phase Reactors

Reactor model (Note)	Recommended Wire Size		Wiring Method	Qty
RF008X00A	≤ 8 AWG	≤ 8.37 mm^2	Diagram A	1C*3 or 4C*1
T60006L2040W453	≤ 8 AWG	≤ 8.37 mm^2	Diagram B	
RF004X00A	≤ 1 AWG	≤ 42.41 mm^2	Diagram A	1C*3 or 4C*1
T60006L2050W565	≤ 1 AWG	≤ 42.41mm^2	Diagram B	
RF002X00A	≤ 600 MCM	≤ 304 mm^2	Diagram A	1C*3 or 4C*1
T60006L2160V066	≤ 600 MCM	≤ 304 mm^2	Diagram B	
RF300X00A	≤ 300 MCM	≤ 152 mm^2	Diagram A	1C*12 or 4C*3

Note 1: *600V insulated cable wire
Note 2: Above table only considers the motor wire size
Note 3: For max. wiring quantity, refer to Chapter 5 Main Circuit Terminal.

Table 7-71

Diagram A

Put all wires through at least one core without winding.

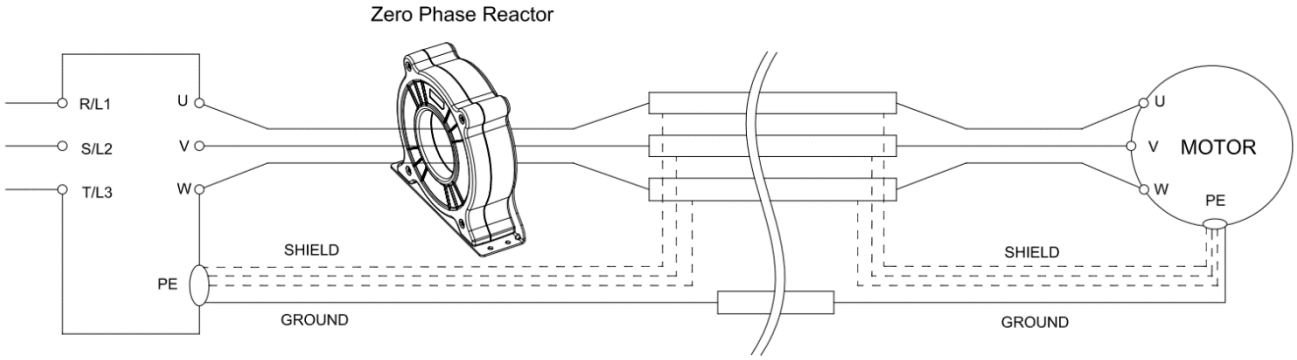

Diagram B

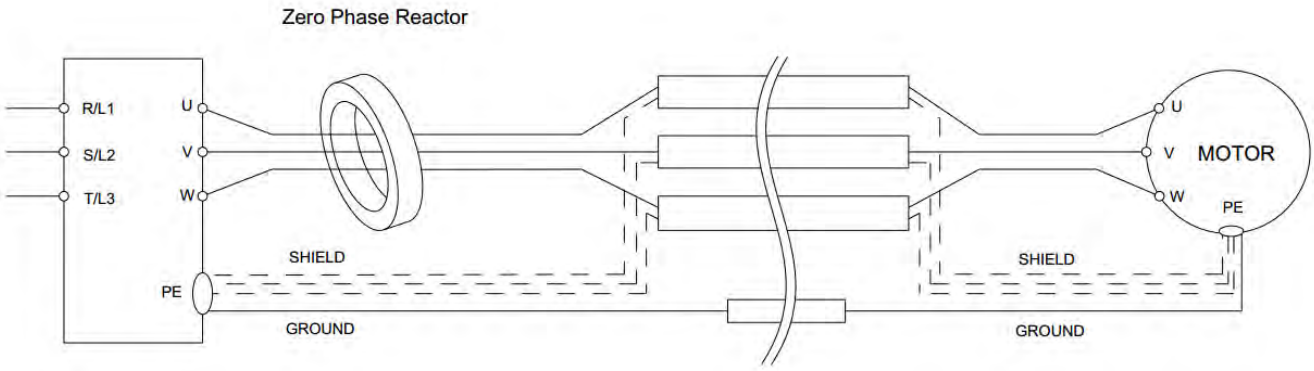

Diagram C

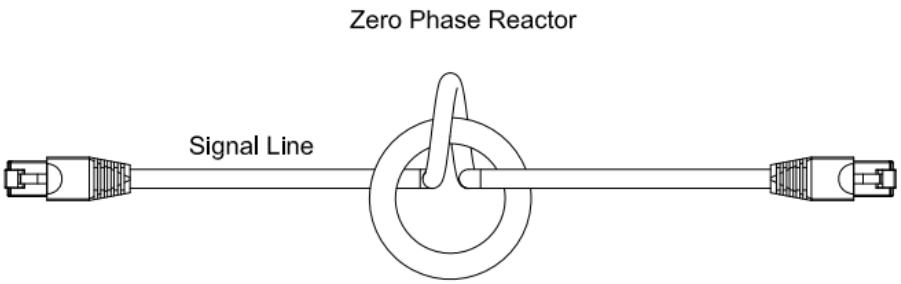

Diagram D

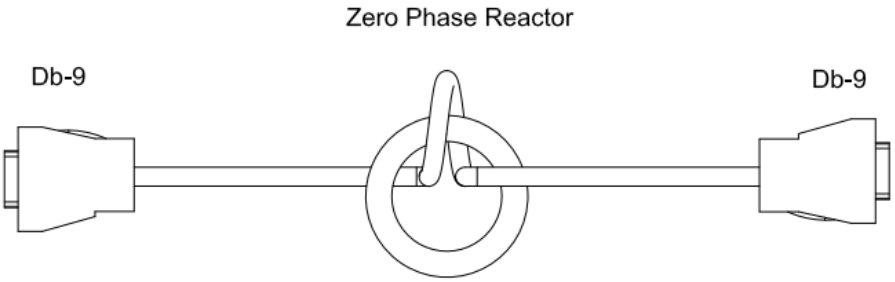

Diagram E

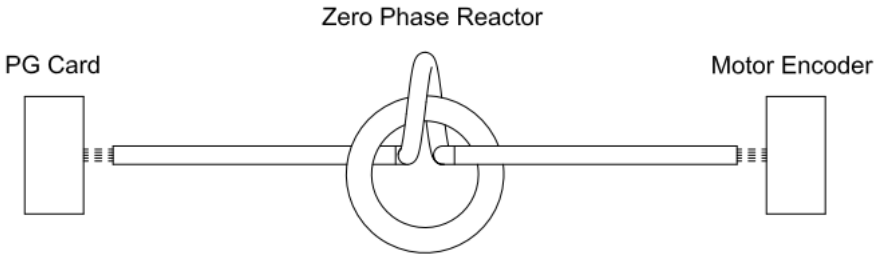

Note 1: The table above gives approximate wire size for the zero phase reactors but the selection is ultimately governed by the type and diameter of cable fitted, i.e. the cable must fit through the center hole of zero phase reactors.

Note 2: Only the phase conductors should pass through, not the earth core or screen.

Note 3: For the zero phase reactor used for signal cables, it is recommended to install near to the driver and well fixed, as to prevent vibration and pulling of the cable.

Model*	Recommended wire size	Wiring method	Q'ty	Applicable cables
T60006L2050W565	≦1 AWG	Diagram D	1	D-sub
T60006L2040W453	≦8 AWG	Diagram C	1	Category 5e shielding、Shielded twisted pair cable、CAN standard cable (TAP-CB05, TAP-CB10)
T60004L2025W622	≦10AWG	Diagram E	1	PG card signal cable
T60004L2016W620	≦12AWG	Diagram E	1	PG card signal cable

Table 7-72

Note 1: *The table above is for reference only, please choose the zero phase reactor based on the actual wire size that you are using.

Note 2: Some of the cables are recommended to choose bigger zero phase reactor due to its corresponded mechanical size.

Recommended max. motor wire size of zero phase reactor (included LUG width and temp. tolerance of motor cable)

Zero phase reactor	Available max. wire size/ LUG width	Available max. AGW (1C*3)		Available max. AWG (4C*1)	
		75C	90C	75C	90C
RF008X00A	13 mm	3 AWG	1 AWG	3 AWG	1 AWG
RF004X00A	16 mm	1 AWG	2/0 AWG	1 AWG	1/0 AWG
RF002X00A	36 mm	600 MCM	600 MCM	1 AWG	1/0 AWG
RF300X00A	73 mm	650 MCM	650 MCM	300 MCM	300 MCM
T60006L2040W453	11 mm	9 AWG	4 AWG	6 AWG	6 AWG
T60006L2050W565	16 mm	1 AWG	2/0 AWG	1 AWG	1/0 AWG
T60006L2160V066	57 mm	600 MCM	600 MCM	300 MCM	300 MCM

Table 7-73

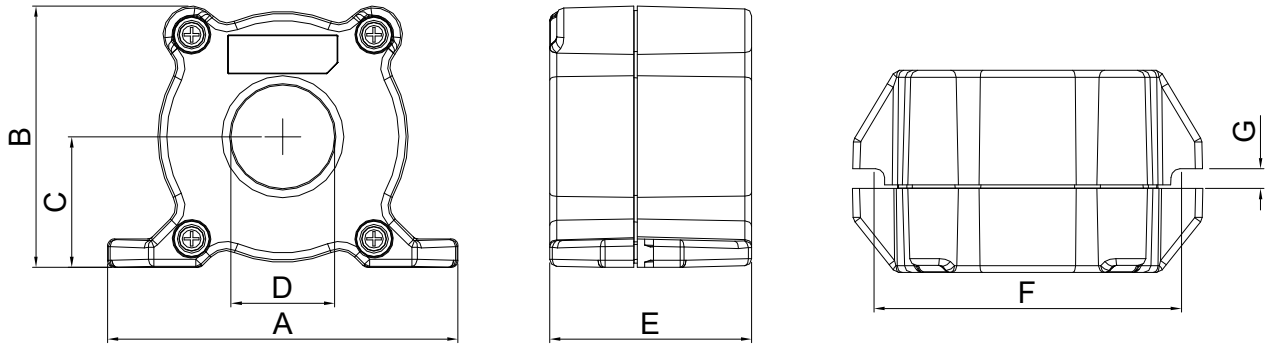

Unit: mm [inch]

Model	A	B	C	D	E	F	G(Ø)	Torque
RF008X00A	98 [3.858]	73 [2.874]	36.5 [1.437]	29 [1.142]	56.5 [2.224]	86 [3.386]	5.5 [0.217]	< 10 kgf/cm^2
RF004X00A	110 [4.331]	87.5 [3.445]	43.5 [1.713]	36 [1.417]	53 [2.087]	96 [3.780]	5.5 [0.217]	< 10 kgf/cm^2

Table 7-74

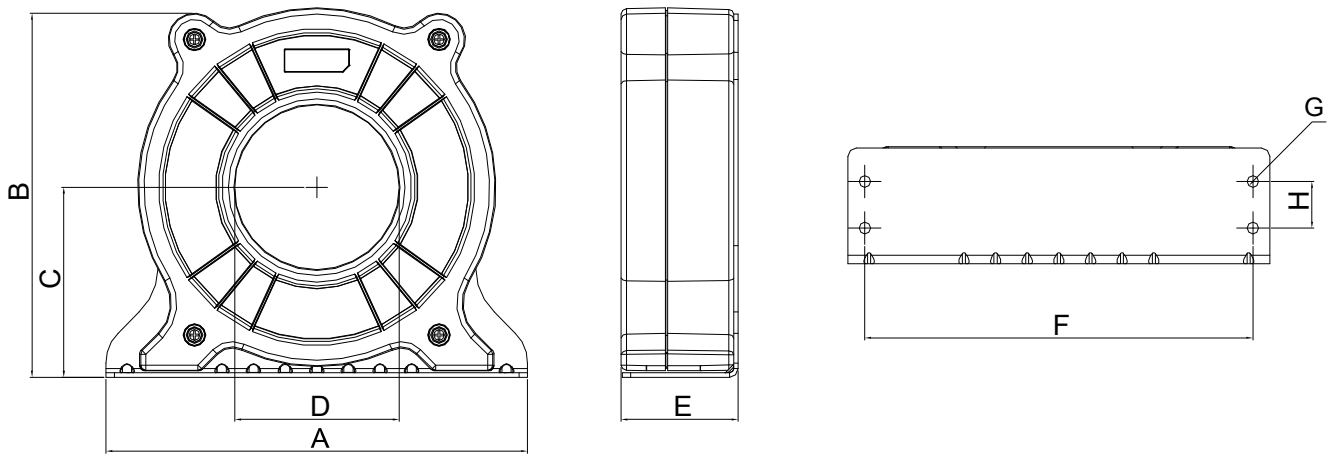

Unit: mm [inch]

Model	A	B	C	D	E	F	G(Ø)	H	Torque
RF002X00A	200 [7.874]	172.5 [6.791]	90 [3.543]	78 [3.071]	55.5 [2.185]	184 [7.244]	5.5 [0.217]	22 [0.866]	<45 kgf/cm^2

Table 7-75

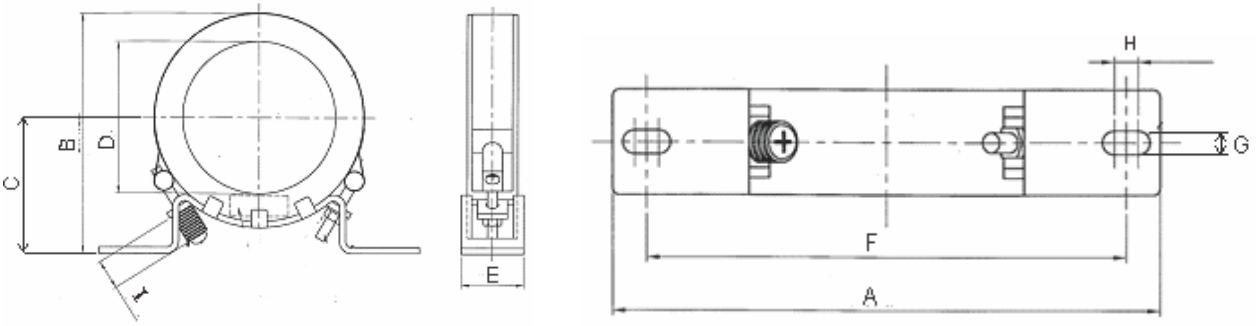

Unit: mm [inch]

Model	A	B	C	D	E	F	G(Ø)	H	I
RF300X00A	241 [9.488]	217 [8.543]	114 [4.488]	155 [6.102]	42 [1.654]	220 [8.661]	6.5 [0.256]	7.0 [0.276]	20 [0.787]

Table 7-76

Magnetic Ring

Model number: T60006-L2040-W453

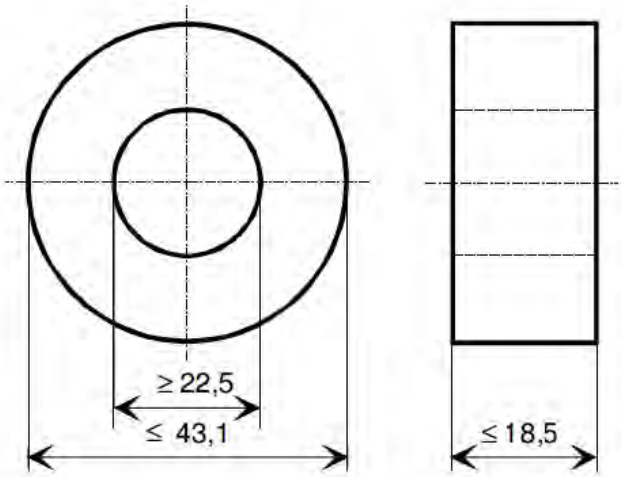

Unit: mm

Model number: T60006-L2050-W565

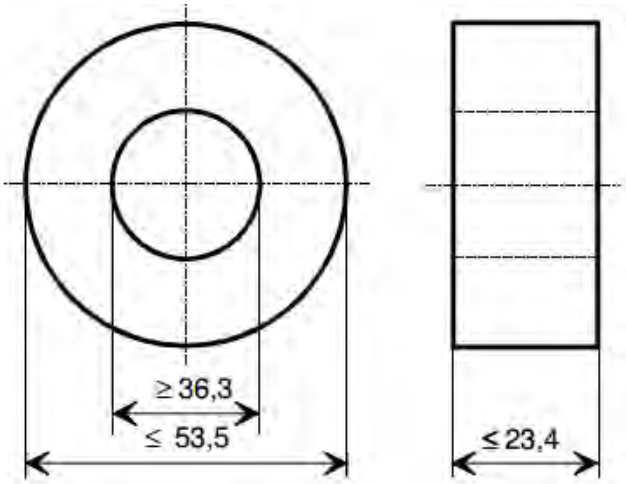

Unit: mm

Model number: T60006-L2160-V066

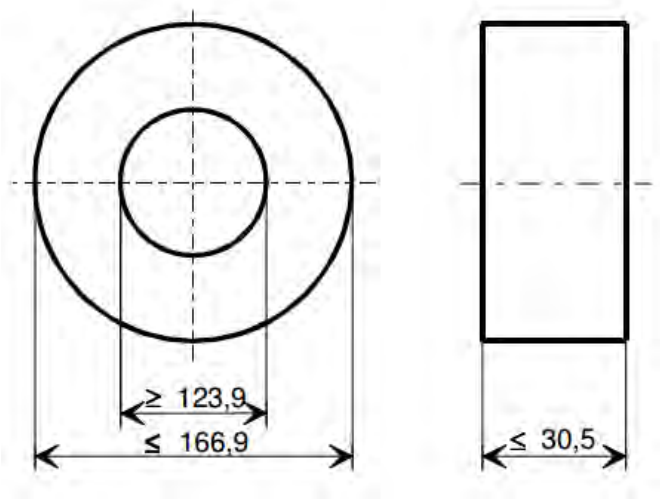

Unit: mm

Model number: T60004-L2016-W620

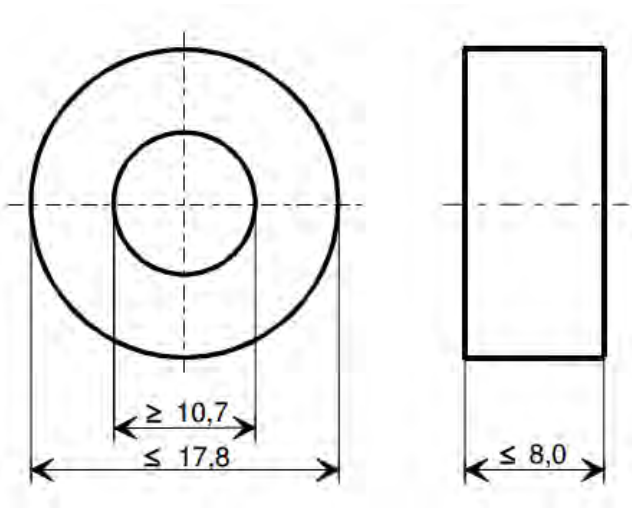

Unit: mm

Model number: T60004-L2025-W622

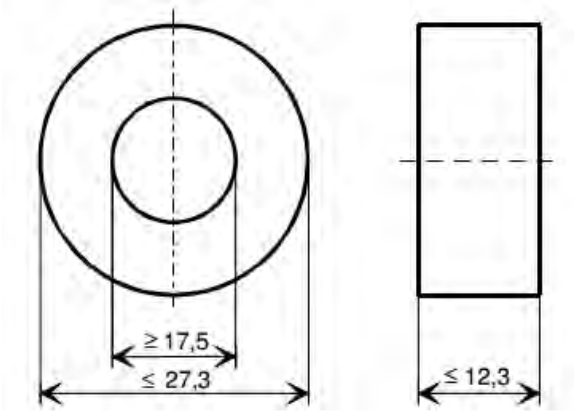

Unit: mm

7-6 EMC Filter

Following table is the external EMC filter of C2000 Plus series, user can choose corresponding zero phase reactor and suitable shielded cable length in accord to required noise emission and electromagnetic interference level to have the best configuration to suppress the electromagnetic interference. When the application does not consider RE and only needs CE to comply with C2 or C1, there is no need to install zero phase reactor in input side.

230V models

C2000 Plus			Filter model name	Zero phase reactor		Fc	Conducted Emission		Radiation Emission
Frame	Model	Rated input current [A]		Input side (R/S/T)	Output side (U/V/W)		Output shielded cable length		EN61800-3
							C2	C1	
A	VFD007C23A-21	6.4	EMF021A23A	RF008X00A or T60006L2040W453	RF008X00A or T60006L2040W453	≤ 8kHz	100m	50m	C2
	VFD015C23A-21	12							
	VFD022C23A-21	16							
	VFD037C23A-21	20							
B	VFD055C23A-21	28	EMF056A23A	RF004X00A or T60006L2050W565	RF004X00A or T60006L2050W565				
	VFD075C23A-21	36							
	VFD110C23A-21	52							
C	VFD150C23A-21	72	KMF3100A	RF002X00A or T60006L2160V066	RF002X00A or T60006L2160V066	≤ 6kHz			
	VFD185C23A-21	83							
	VFD220C23A-21	99							
D	VFD300C23A-00 VFD300C23A-21	124	B84143D0150R127	N/A					
	VFD370C23A-00 VFD370C23A-21	143							
E	VFD450C23A-00 VFD450C23A-21	171	B84143B0250S020	N/A	RF300X00A or T60006L2160V066	≤ 4kHz			
	VFD550C23A-00 VFD550C23A-21	206							
	VFD750C23A-00 VFD750C23A-21	245							
F	VFD900C23A-00 VFD900C23A-21	331	B84143B0400S020						

Table 7-77

460V models

C2000 Plus			Filter model name (U/V/W)	Zero phase reactor		Fc	Conducted Emission		Radiation Emission
Frame	Model	Rated input current [A]		Input side (R/S/T)	Output side (U/V/W)		Output shielded cable length		EN61800-3
							C2	C1	
A	VFD007C43A-21	4.3	EMF014A43A	RF008X00A or T60006L2040W453	RF008X00A or T60006L2040W453	≤ 8kHz	100m	50m	C2
	VFD015C43A-21	5.9							
	VFD022C43A-21	8.7							
	VFD037C43A-21	14	EMF018A43A						
	VFD040C43A-21	15.5							
	VFD055C43A-21	17							
B	VFD075C43A-21	20	EMF039A43A	RF004X00A or T60006L2050W565	RF004X00A or T60006L2050W565				
	VFD110C43A-21	26							
	VFD150C43A-21	35							
C	VFD185C43A-21	40	KMF370A	RF002X00A or T60006L2160V066	RF002X00A or T60006L2160V066	≤ 6kHz			
	VFD220C43A-21	47							
	VFD300C43A-21	63							
D0	VFD370C43S-00 VFD370C43S-21	74	B84143D0150R127	N/A					
	VFD450C43S-00 VFD450C43S-21	101							
D	VFD550C43A-00 VFD550C43A-21	114							
	VFD750C43A-00 VFD750C43A-21	157				≤ 4kHz			
E	VFD900C43A-00 VFD900C43A-21	167	B84143D0200R127	N/A	RF300X00A or T60006L2160V066				
	VFD1100C43A-00 VFD1100C43A-21	207							
F	VFD1320C43A-00 VFD1320C43A-21	240	MIF3400B						
	VFD1600C43A-00 VFD1600C43A-21	300							
G	VFD1850C43A-00 VFD1850C43A-21	380							
	VFD2000C43A-00 VFD2000C43A-21	395							
	VFD2200C43A-00 VFD2200C43A-21	400							
	VFD2500C43A-00 VFD2500C43A-21	447	MIF3800						
H	VFD2800C43A-00 VFD2800C43C-21	494							
	VFD3150C43A-00 VFD3150C43C-21	555							
	VFD3550C43A-00 VFD3550C43C-21	625							
	VFD4500C43A-00 VFD4500C43C-21	866	B84143B1000S020				75m		
	VFD5000C43A-00 VFD5000C43C-21	930	Contact Delta						
	VFD5600C43A-00 VFD5600C43C-21	1094							

Table 7-78

C2000 Plus			Filter model name (U/V/W)	Zero phase reactor		Carrier Frequency	Conducted Emission	Radiation Emission
Frame	Model	Rated Input Current [A]		Input side (R/S/T)	Output side (U/V/W)		Output shielded cable length EN618000-3 C2	EN61800-3
D0	VFD370C43S-00 VFD370C43S-21	74	B84143B0120R110	N/A	N/A	≤6kHz	25m	*C2
	VFD450C43S-00 VFD450C43S-21	101						
D	VFD550C43A-00 VFD550C43A-21	114	B84143B0180S020		RF300X00A or T60006L2160V066	≤4kHz	13m	*C3
	VFD750C43A-00 VFD750C43A-21	157						
E	VFD900C43A-00 VFD900C43A-21	167	B84143B0250S020					C2
	VFD1100C43A-00 VFD1100C43A-21	207						
F	VFD1320C43A-00 VFD1320C43A-21	240	B84143B0400S020					
	VFD1600C43A-00 VFD1600C43A-21	300						
G	VFD1850C43A-00 VFD1850C43A-21	380	B84143B0600S020			≤2kHz		
	VFD2000C43A-00 VFD2000C43A-21	395						
	VFD2200C43A-00 VFD2200C43A-21	400						
	VFD2500C43A-00 VFD2500C43A-21	447						
H	VFD2800C43A-00 VFD2800C43C-21	494	B84143B1000S020					*C3
	VFD3150C43A-00 VFD3150C43C-21	555						
	VFD3550C43A-00 VFD3550C43C-21	625						
	VFD4500C43A-00 VFD4500C43C-21	866						
	VFD5000C43A-00 VFD5000C43C-21	930	B84143B1600S020	T60006L2160V066	T60006L2160V066	≤4 kHz	75 m	C2
	VFD5600C43A-00 VFD5600C43C-21	1094						

Table 7-79

*For Radiated Emission, the drive needs to be placed inside a cabinet.

C2000 Plus			Filter model name (U/V/W)	Zero phase reactor		Carrier Frequency	Conducted Emission	Radiation Emission
Frame	Model	Rated Input Current [A]		Input side (R/S/T)	Output side (U/V/W)		Output shielded cable length EN618000-3 C3	EN61800-3
D0	VFD370C43S-00 VFD370C43S-21	74	B84143A0120R105	N/A	N/A	≤6kHz	150m	C3
	VFD450C43S-00 VFD450C43S-21	101						
D	VFD550C43A-00 VFD550C43A-21	114	B84143B0180S080					*C3
	VFD750C43A-00 VFD750C43A-21	157						
E	VFD900C43A-00 VFD900C43A-21	167	B84143B0250S080			≤4kHz		C3
	VFD1100C43A-00 VFD1100C43A-21	207						
F	VFD1320C43A-00 VFD1320C43A-21	240	B84143B0400S080					
	VFD1600C43A-00 VFD1600C43A-21	300						
G	VFD1850C43A-00 VFD1850C43A-21	380	B84143B0600S080					
	VFD2000C43A-00 VFD2000C43A-21	395						
	VFD2200C43A-00 VFD2200C43A-21	400						
	VFD2500C43A-00 VFD2500C43A-21	447						
H	VFD2800C43A-00 VFD2800C43C-21	494	B84143B1000S080				100m	
	VFD3150C43A-00 VFD3150C43C-21	555						
	VFD3550C43A-00 VFD3550C43C-21	625						
	VFD4000C43A-00 VFD4000C43C-21	770						
	VFD4500C43A-00 VFD4500C43C-21	866						
	VFD5000C43A-00 VFD5000C43C-21	930	B84143B1600S080	Contact Delta				
	VFD5600C43A-00 VFD5600C43C-21	1094						

*For Radiated Emission, the drive needs to be placed inside a cabinet.

Table 7-80

690V models

Frame	Model	Filter model name	Zero phase reactor	conducted and radiated emission					
				C2-motor cable length-50m			C3-motor cable length-100m		
				Location of zero phase reactor (See figure below)					
				1*	2*	3*	1*	2*	3*
A	VFD015C53A-21	EMF014A63A	T60006L2040W453			1			1
	VFD022C53A-21					1			1
	VFD037C53A-21					1			1
B	VFD055C53A-21	EMF027A63A			1	1		1	1
	VFD075C53A-21				1	1		1	1
	VFD110C53A-21				1	1		1	1
	VFD150C53A-21				1	1		1	1
C	VFD185C63B-21	B84143A0050R021	T60006L2050W565						
	VFD220C63B-21								
	VFD300C63B-21								
	VFD370C63B-21								
D	VFD450C63B-00	B84143A0080R021						1	2
	VFD550C63B-00							1	2
	VFD450C63B-21							1	2
	VFD550C63B-21							1	2
E	VFD750C63B-00	B84143B0150S021	T60006L2160V066						
	VFD900C63B-00								
	VFD1100C63B-00								
	VFD1320C63B-00								
	VFD750C63B-21								
	VFD900C63B-21								
	VFD1100C63B-21								
	VFD1320C63B-21								
F	VFD1600C63B-00	B84143B0250S021							
	VFD2000C63B-00								
	VFD1600C63B-21								
	VFD2000C63B-21								
G	VFD2500C63B-00	B84143B0400S021							
	VFD3150C63B-00								
	VFD2500C63B-21								
	VFD3150C63B-21								
H	VFD4000C63B-00	B84143B1000S021						1	1
	VFD4500C63B-00							1	1
	VFD5600C63B-00							1	1
	VFD6300C63B-00							1	1
	VFD4000C63B-21							1	1
	VFD4500C63B-21							1	1
	VFD5600C63B-21							1	1
	VFD6300C63B-21							1	1

※ The number represents quantity of zero phase reactor, all the motor cable are shielded cables.

Table 7-81

Zero phase reactor installation position diagram:

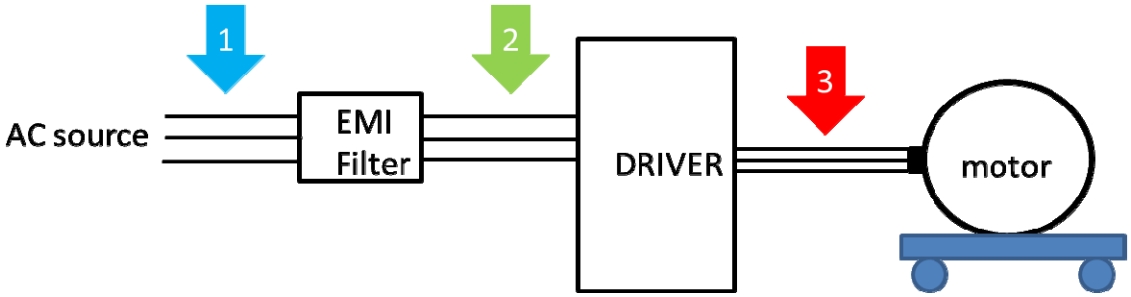

*1 Install at the cable between the power supply and the EMC filter

*2 Install at the cable between the EMC filter and the drive

*3 Install at the cable between the drive and the motor

EMC Filter Dimension

Model name: EMF021A23A, EMF014A43A

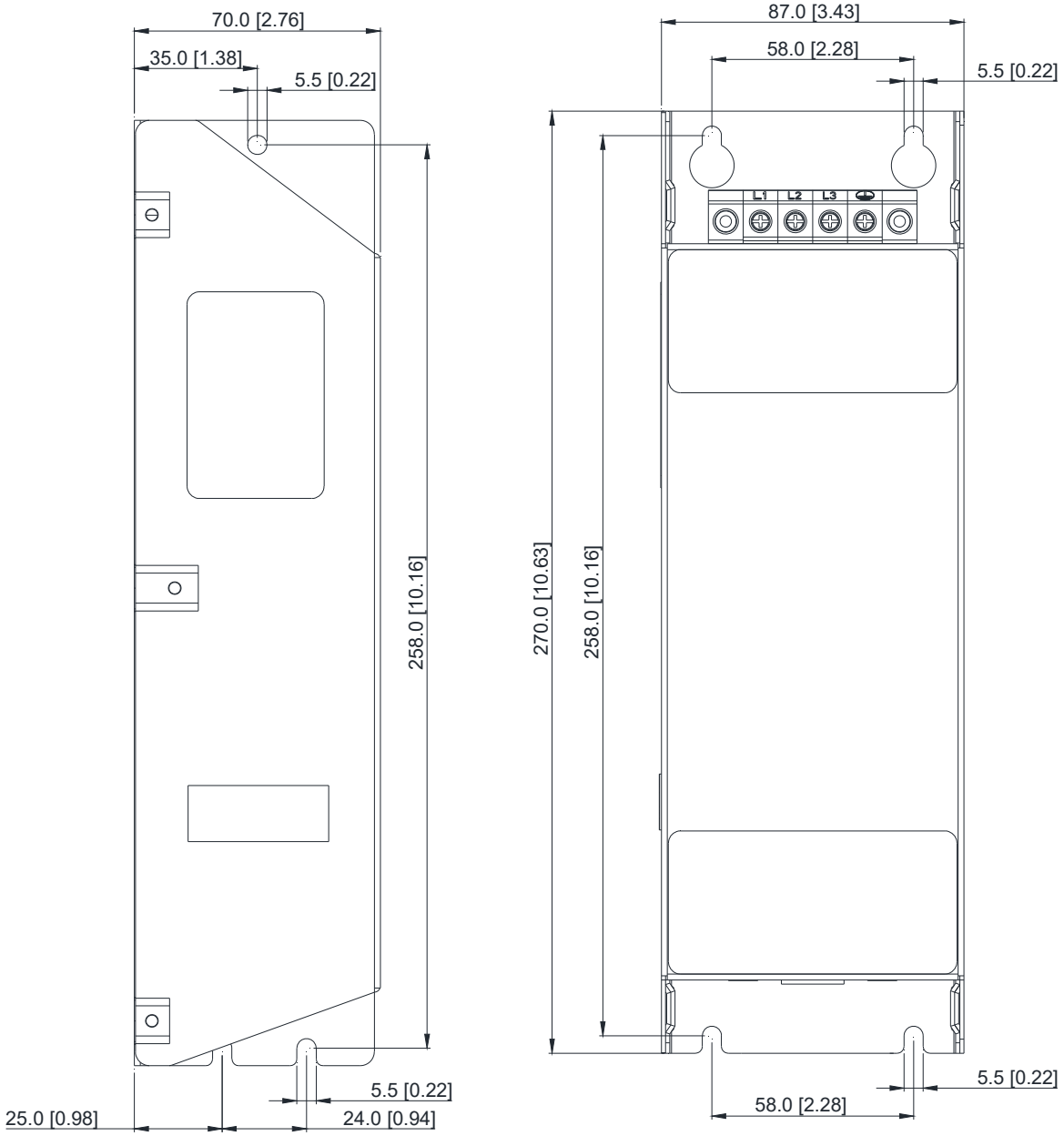

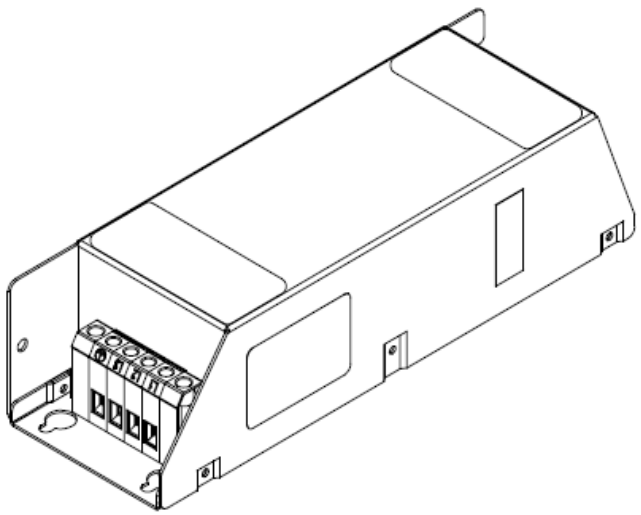

Model name: EMF018A43A, EMF014A63A, EMF027A63A

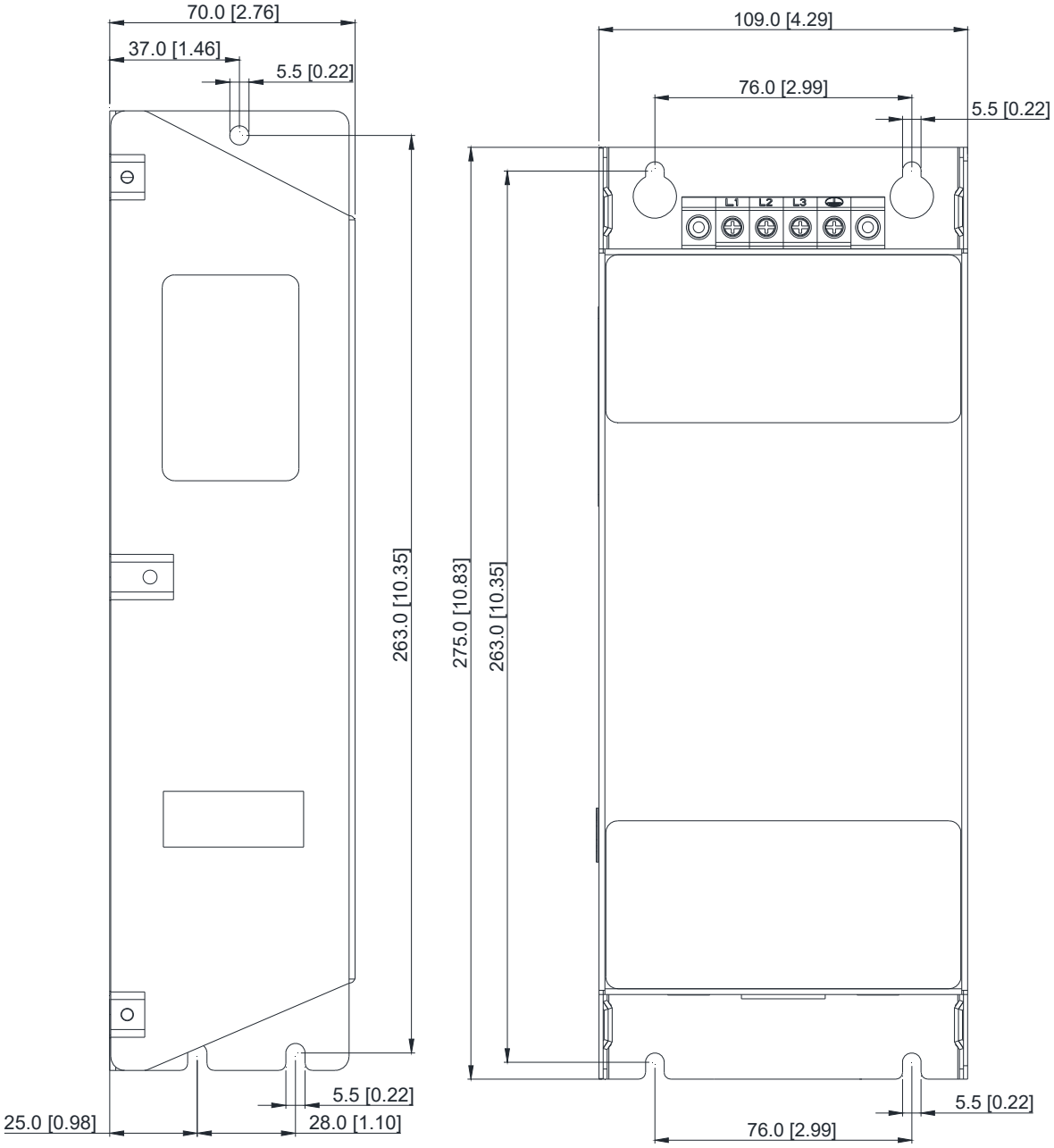

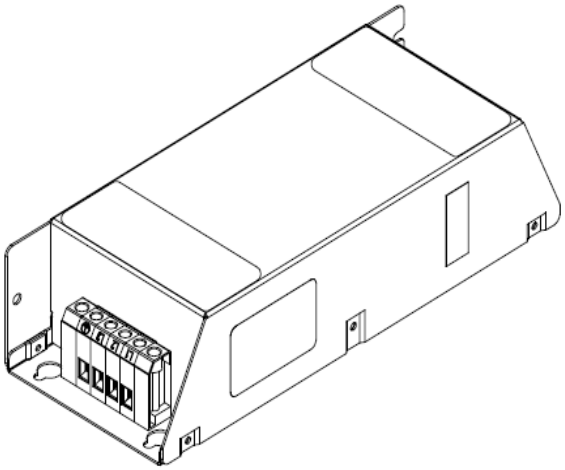

Model name: EMF056A23A, EMF039A43A

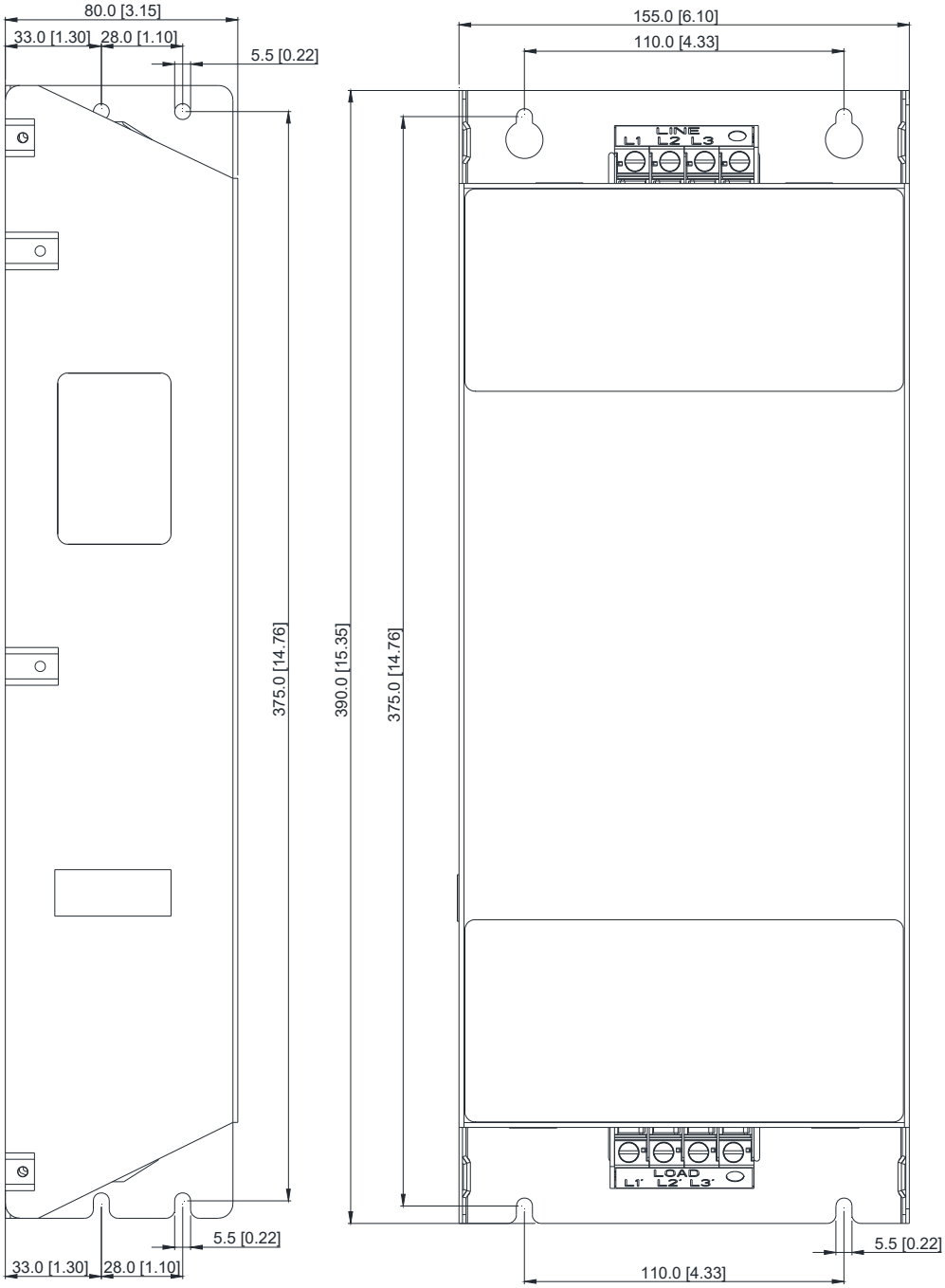

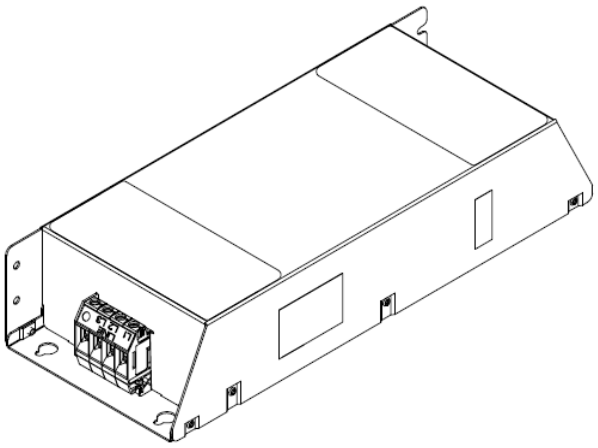

Model name: B84143A0050R021

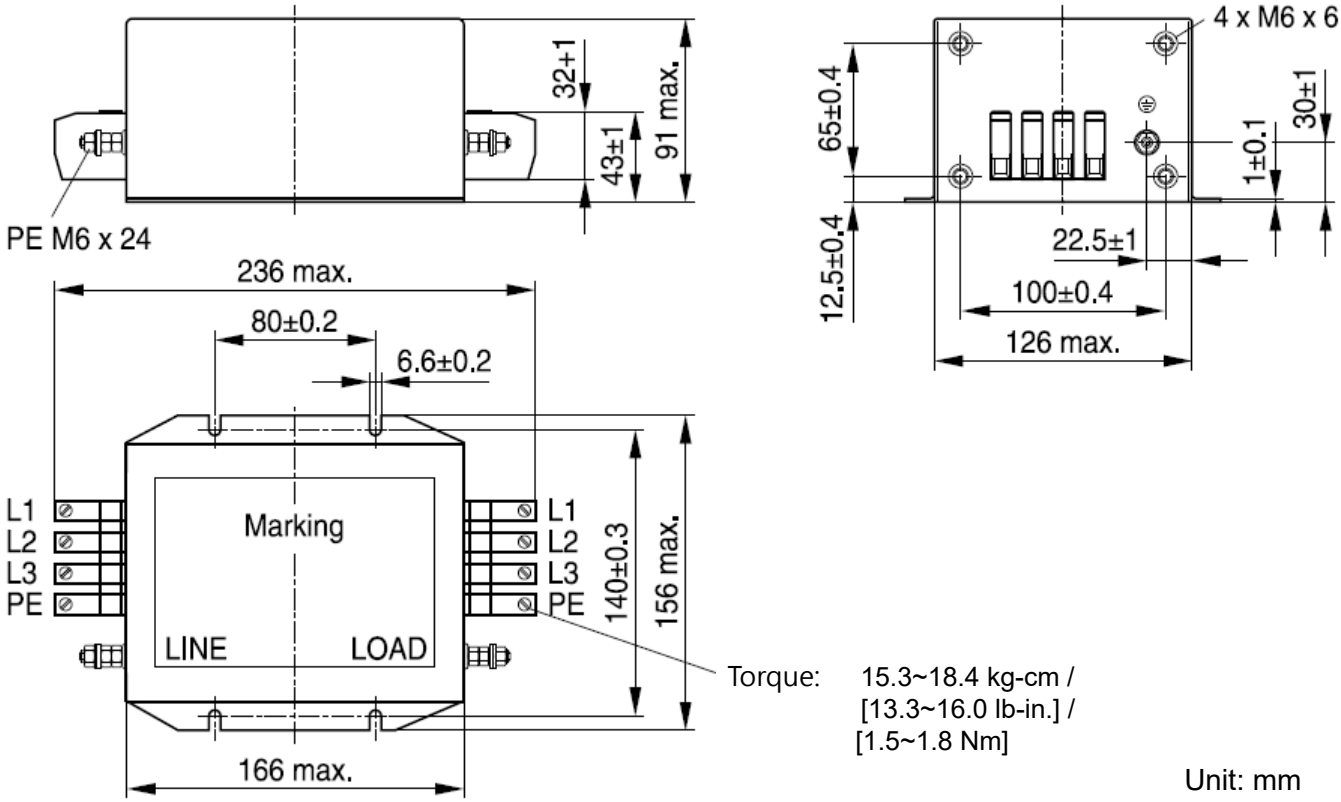

Model name: B84143A0080R021

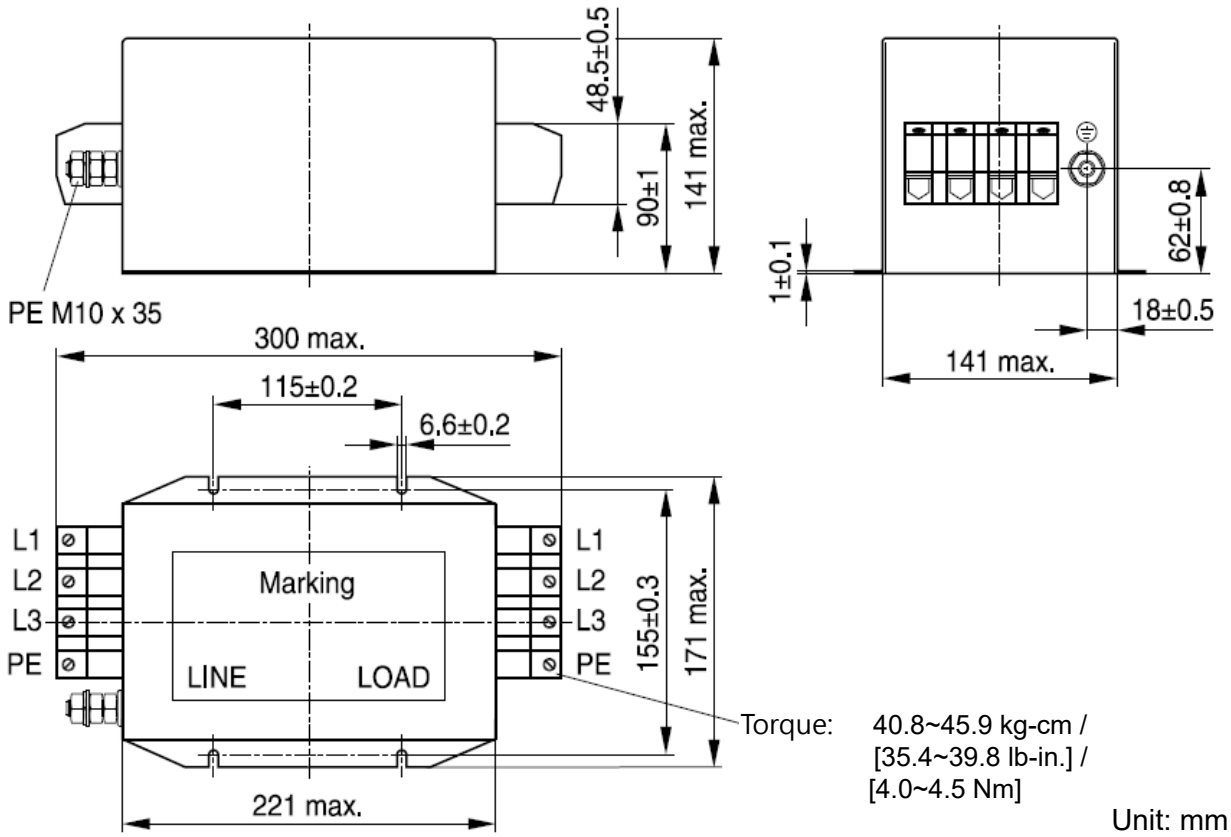

Model name: B84143A0120R105

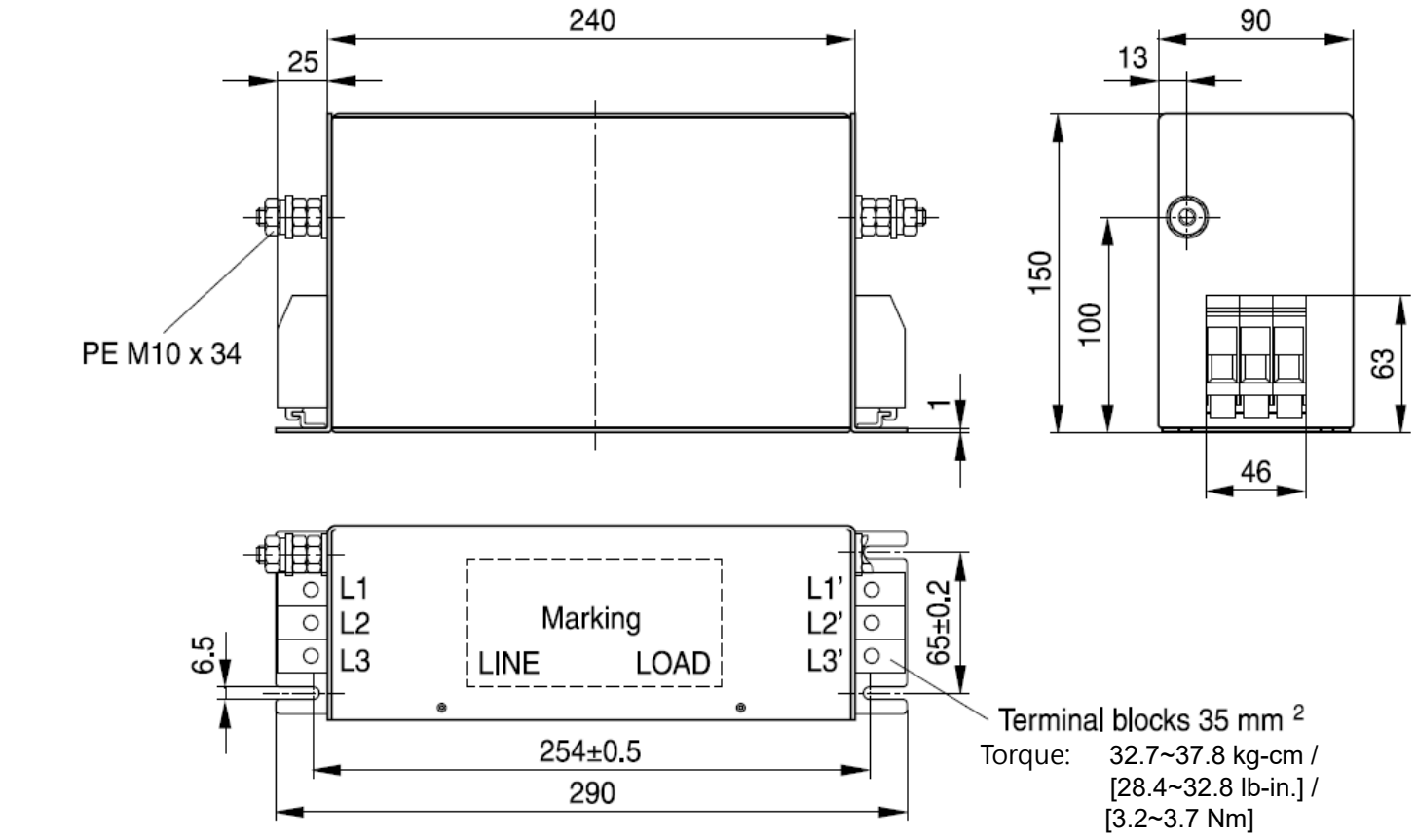

Unit: mm

Model name: B84143B0120R110

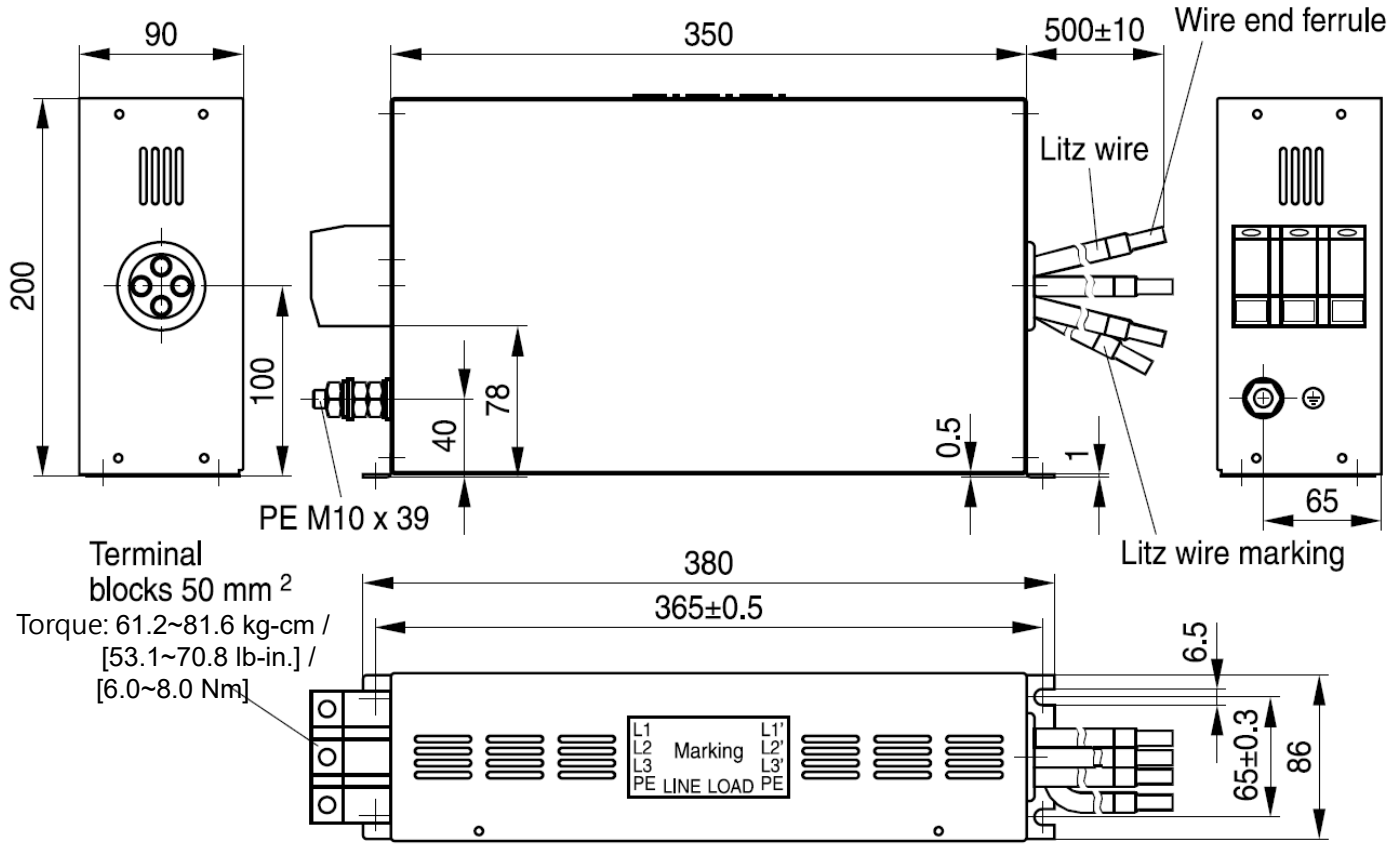

Unit: mm

Model name: B84143B0150S021, B8414B0180S020

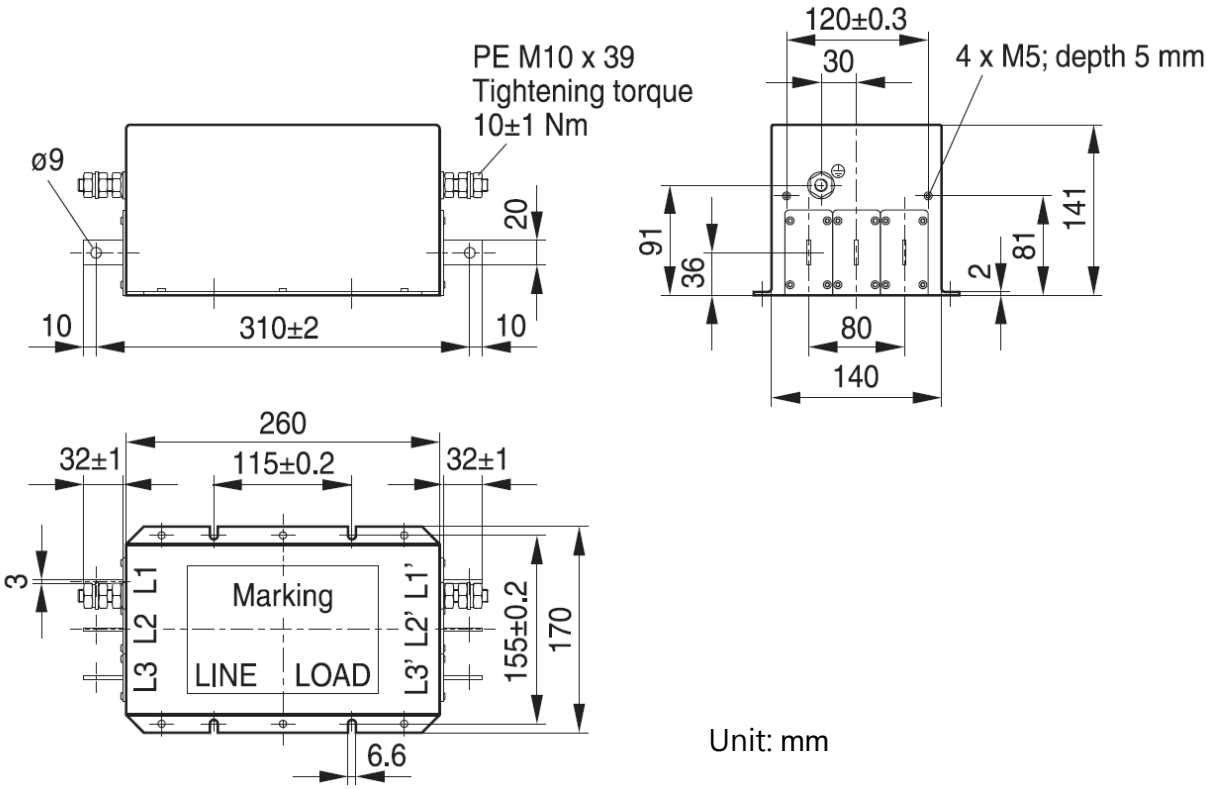

Model name: B84143B0180S080, B84143B0250S080

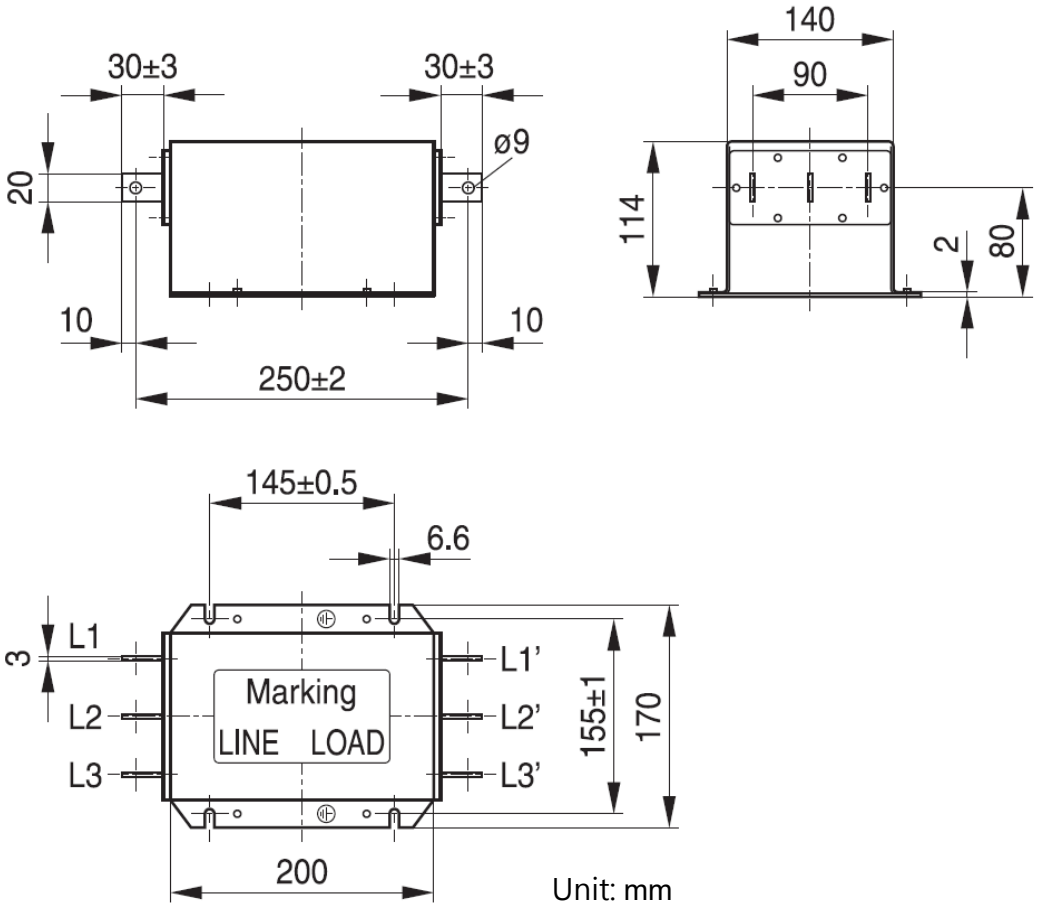

Model name: B84143B0250S020, B84143B0250S021

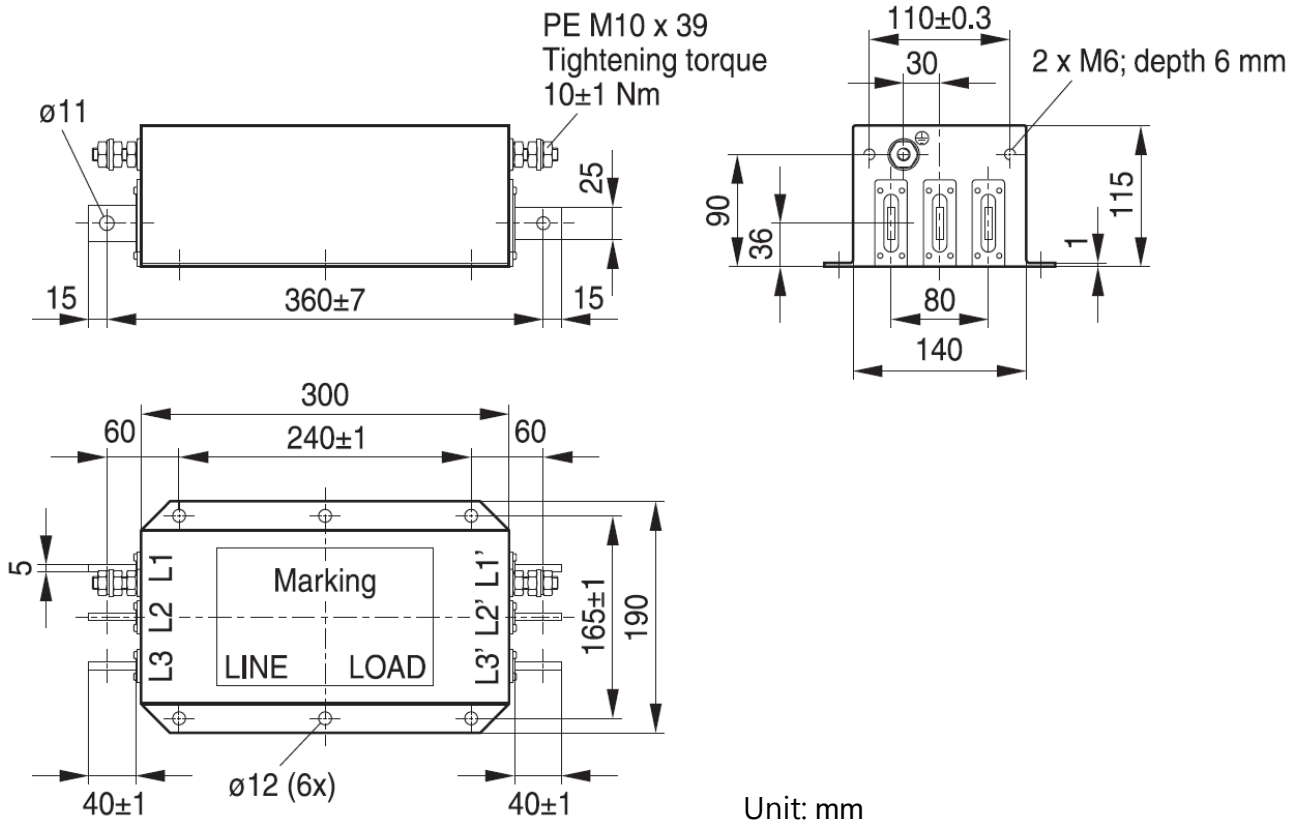

Model name: B84143B0400S020、B84143B0400S021

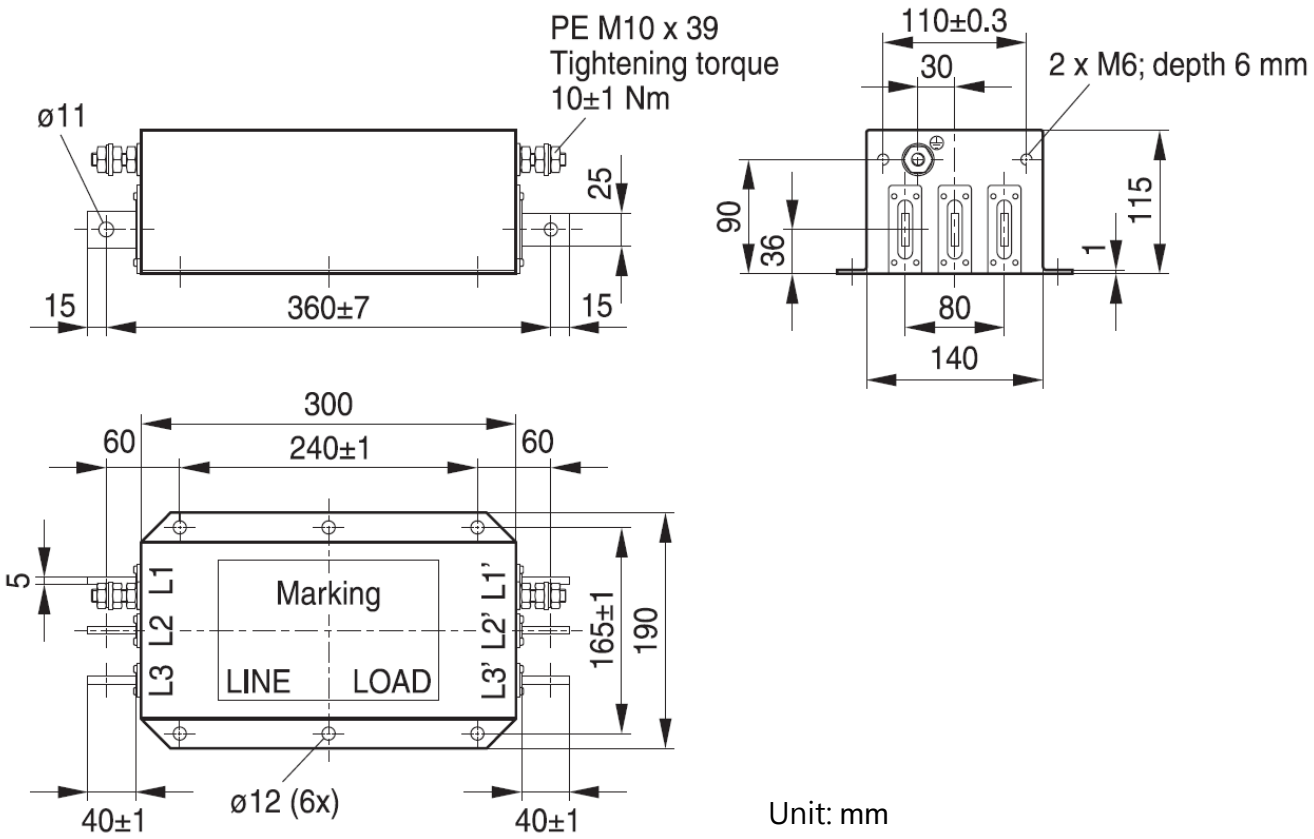

Model name: B84143B0400S080

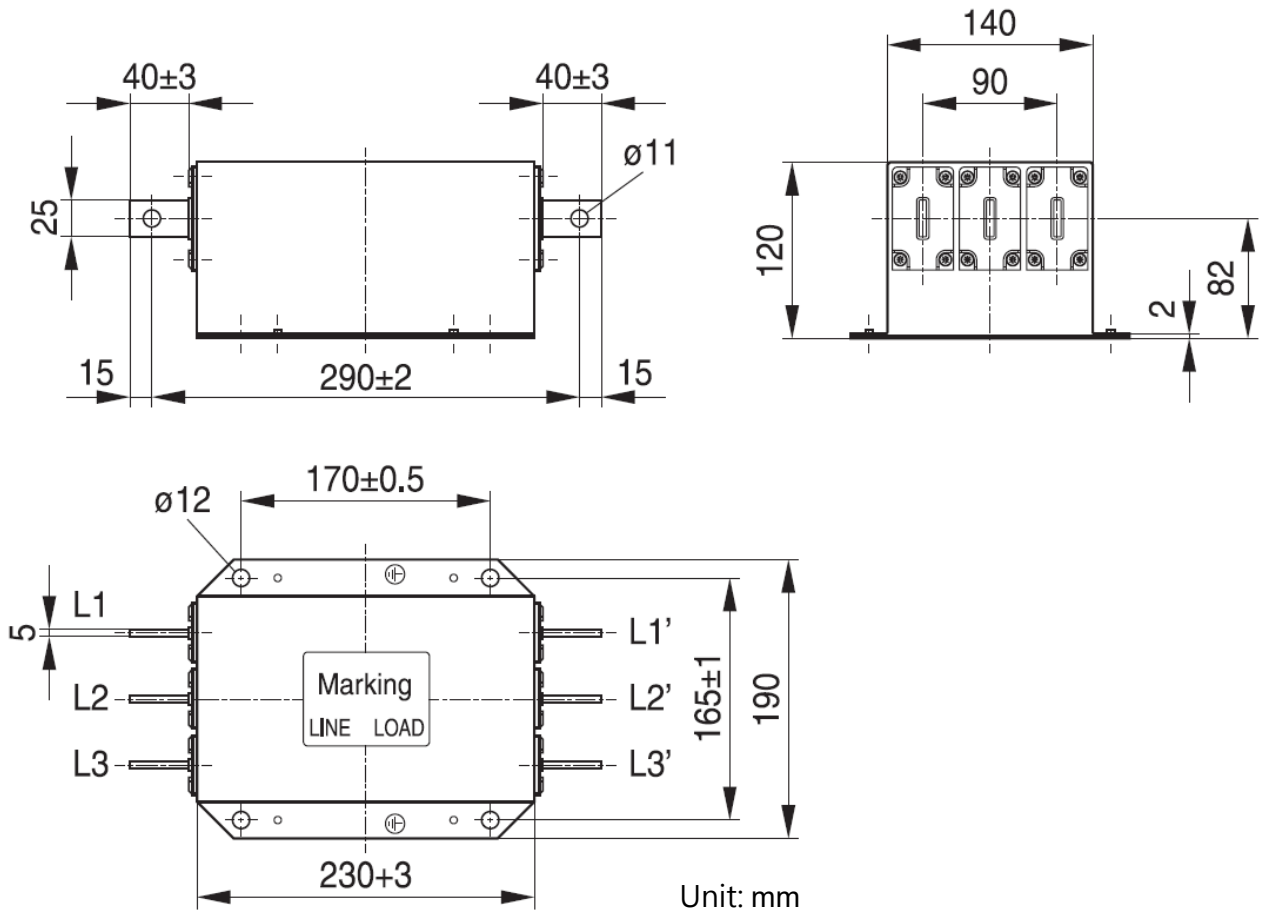

Model name: B84143B0600S020

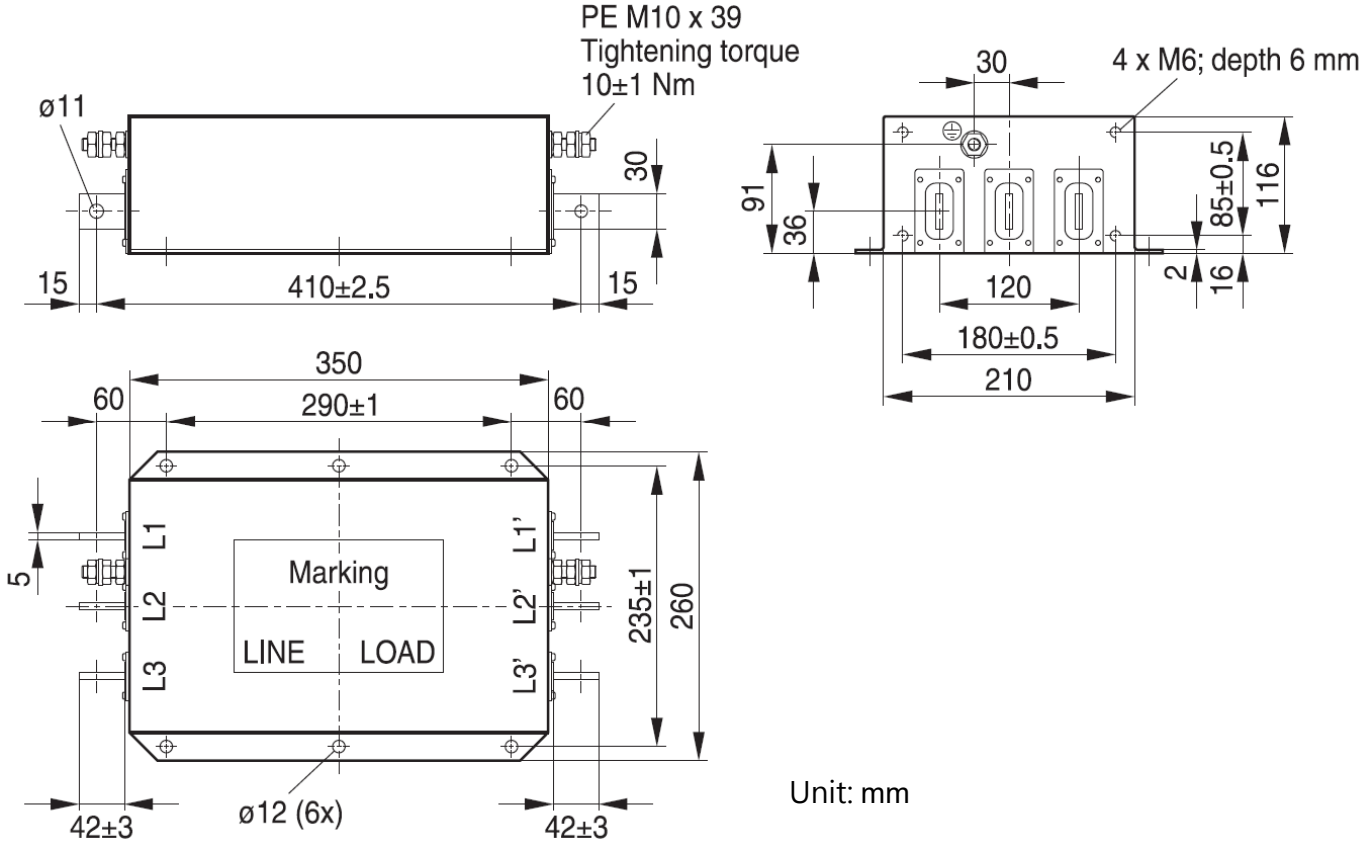

Model name: B84143B0600S080

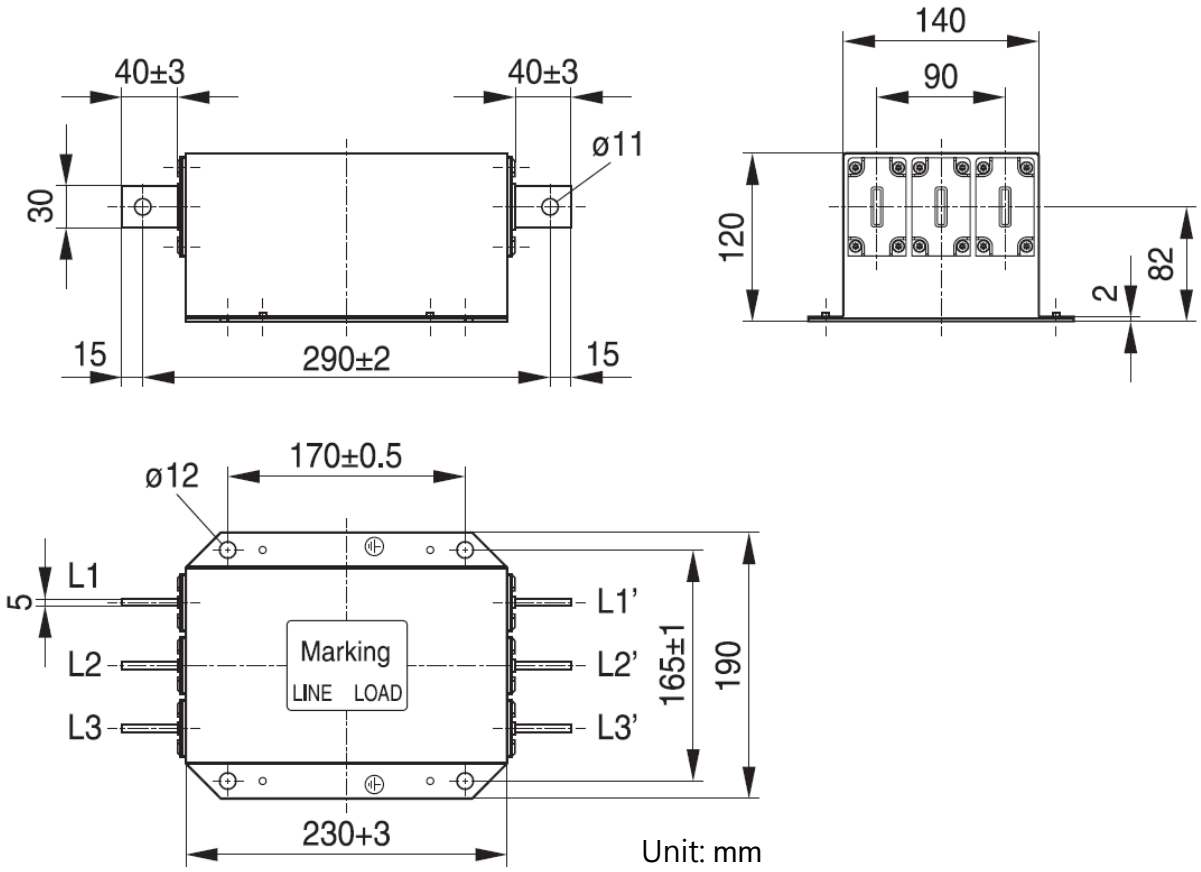

Model name:B84143B1000S020, B84143B1000S021

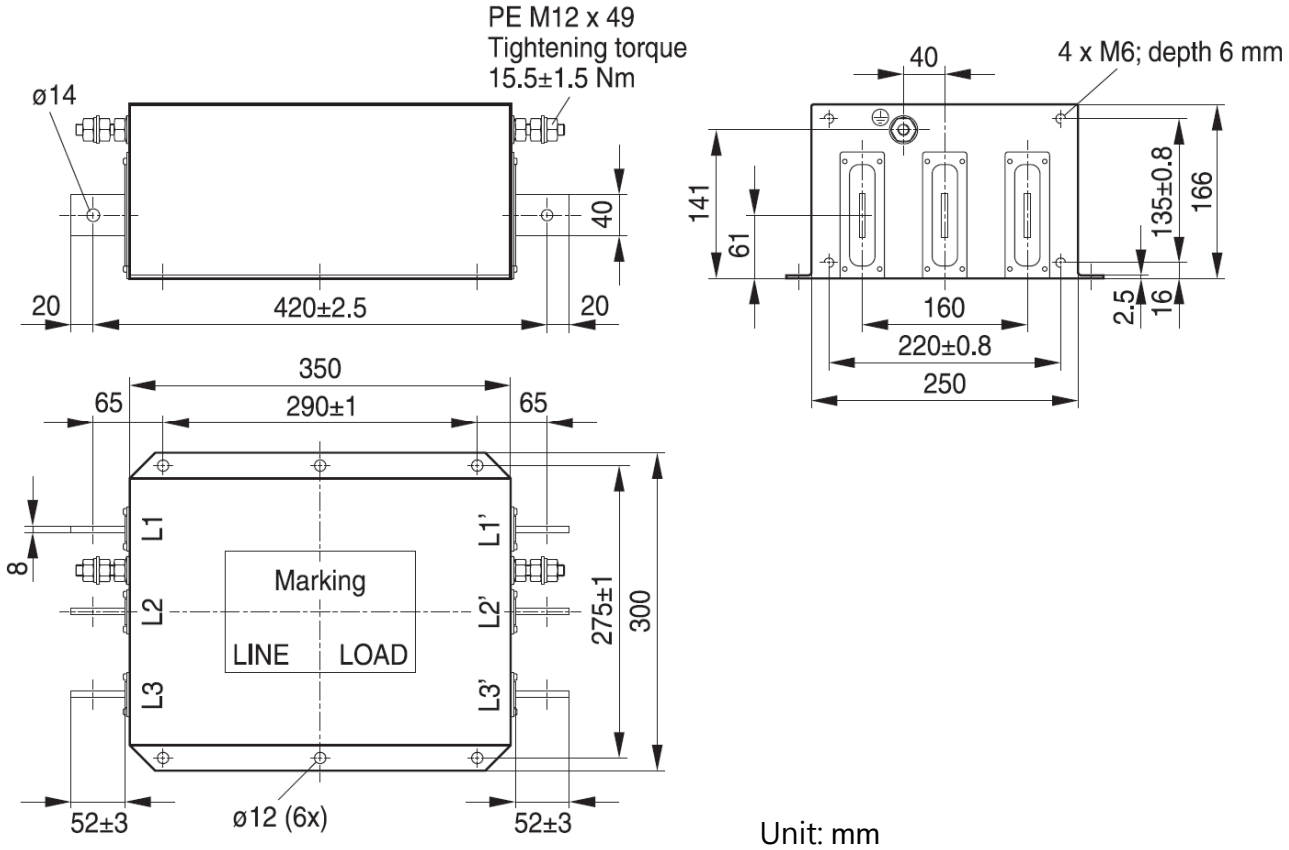

Model name: B84143B1000S080

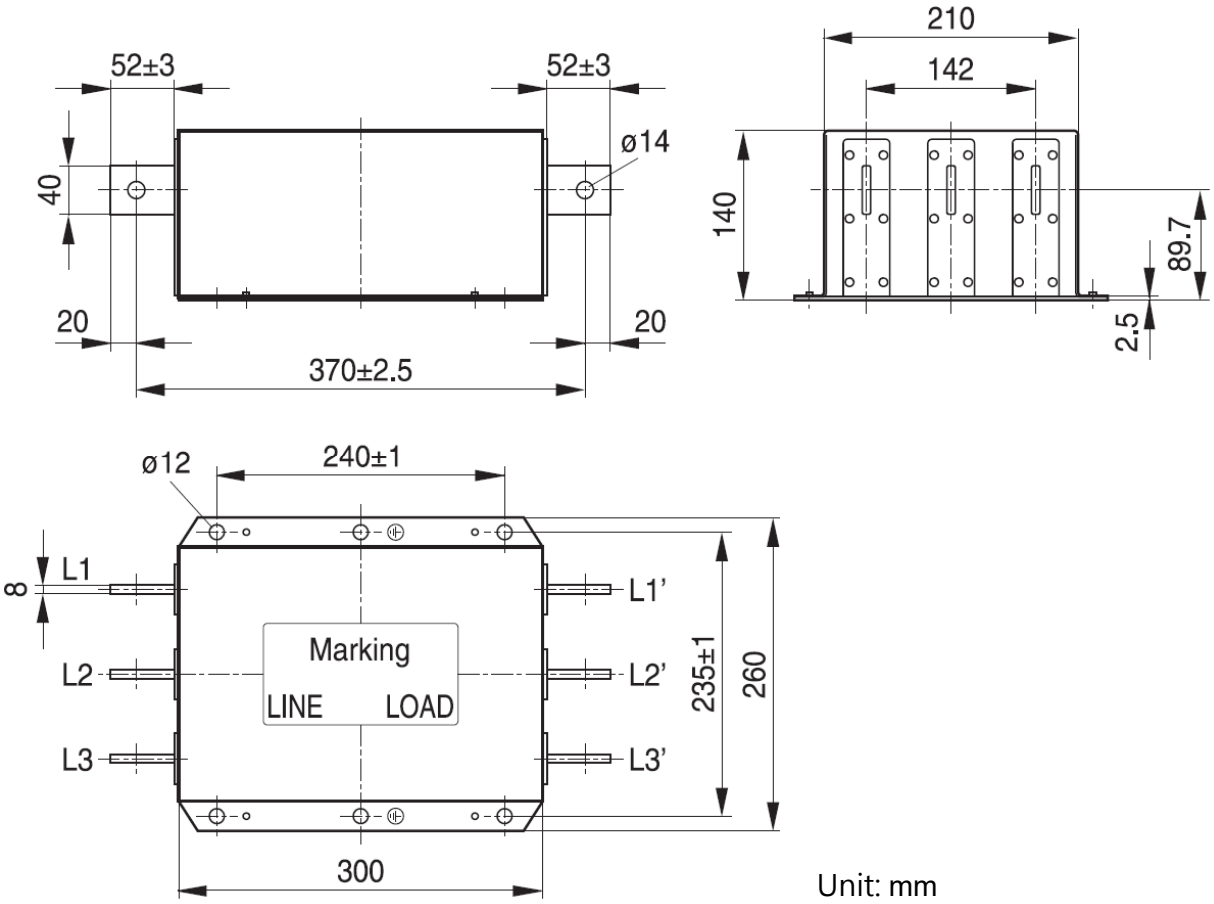

Unit: mm

Model name: B84143B1600S020

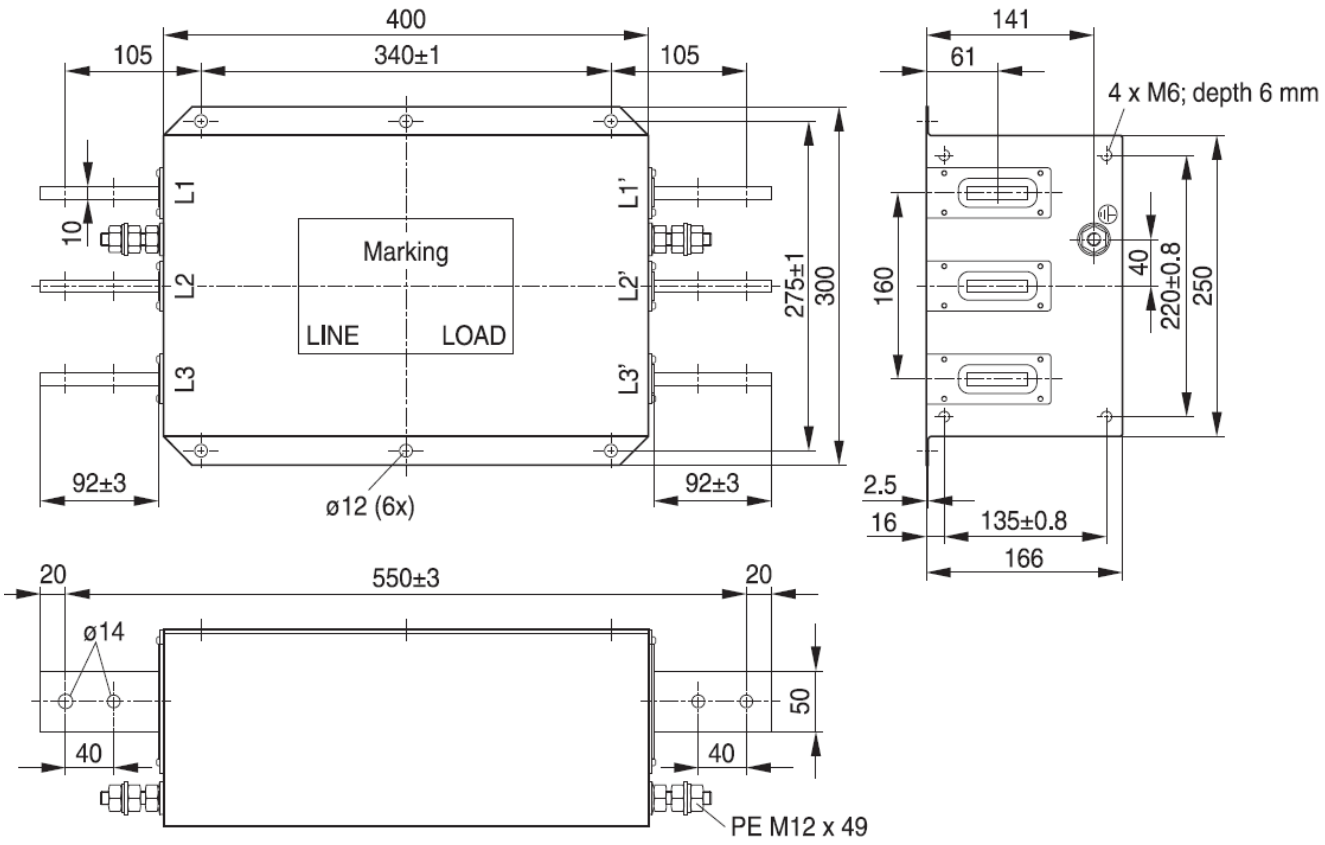

Torque: 142.9~173.5 kg-cm / [132.9~150.6 lb-in.] / [14.0~17.0 Nm]

Unit: mm

Model name: B84143B1600S080

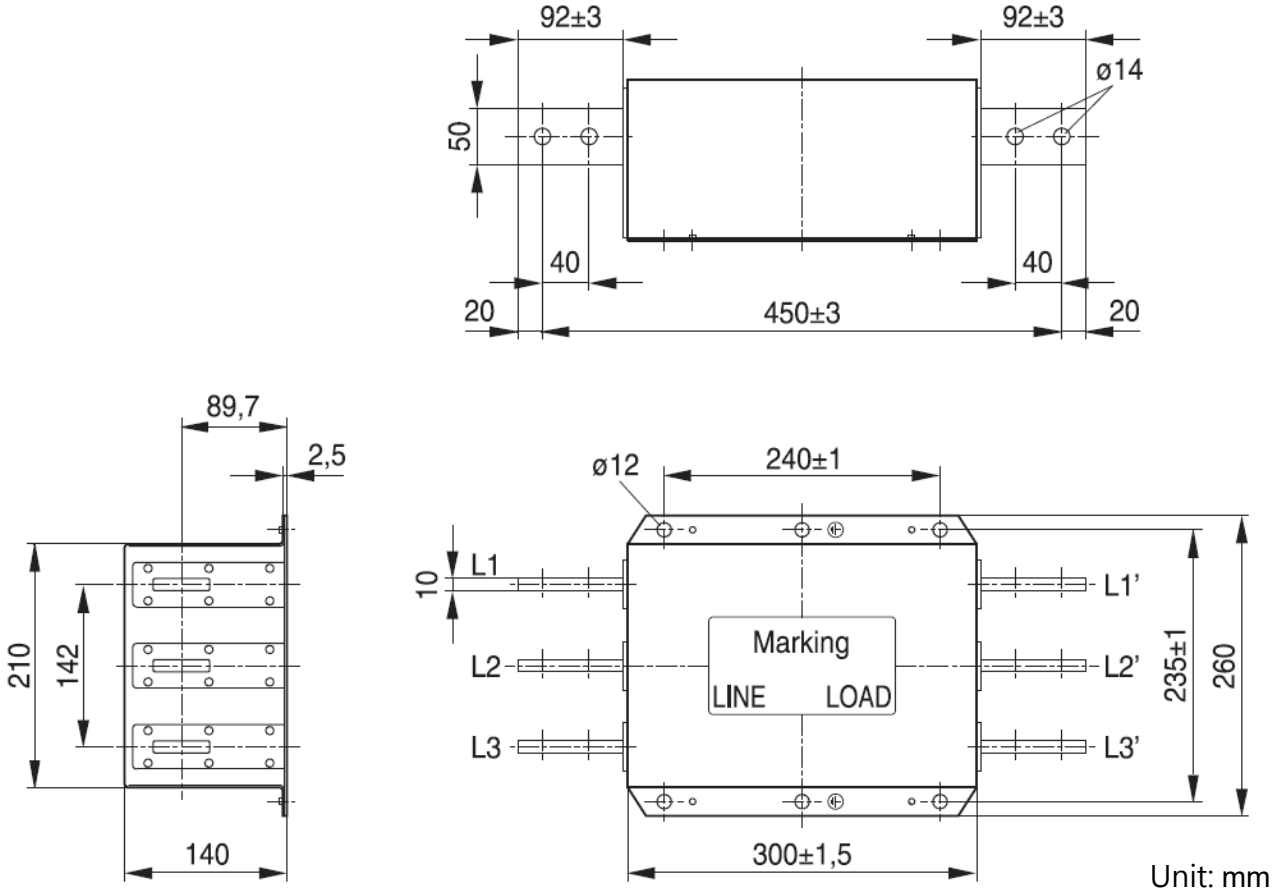

Model name: B84143D0150R127

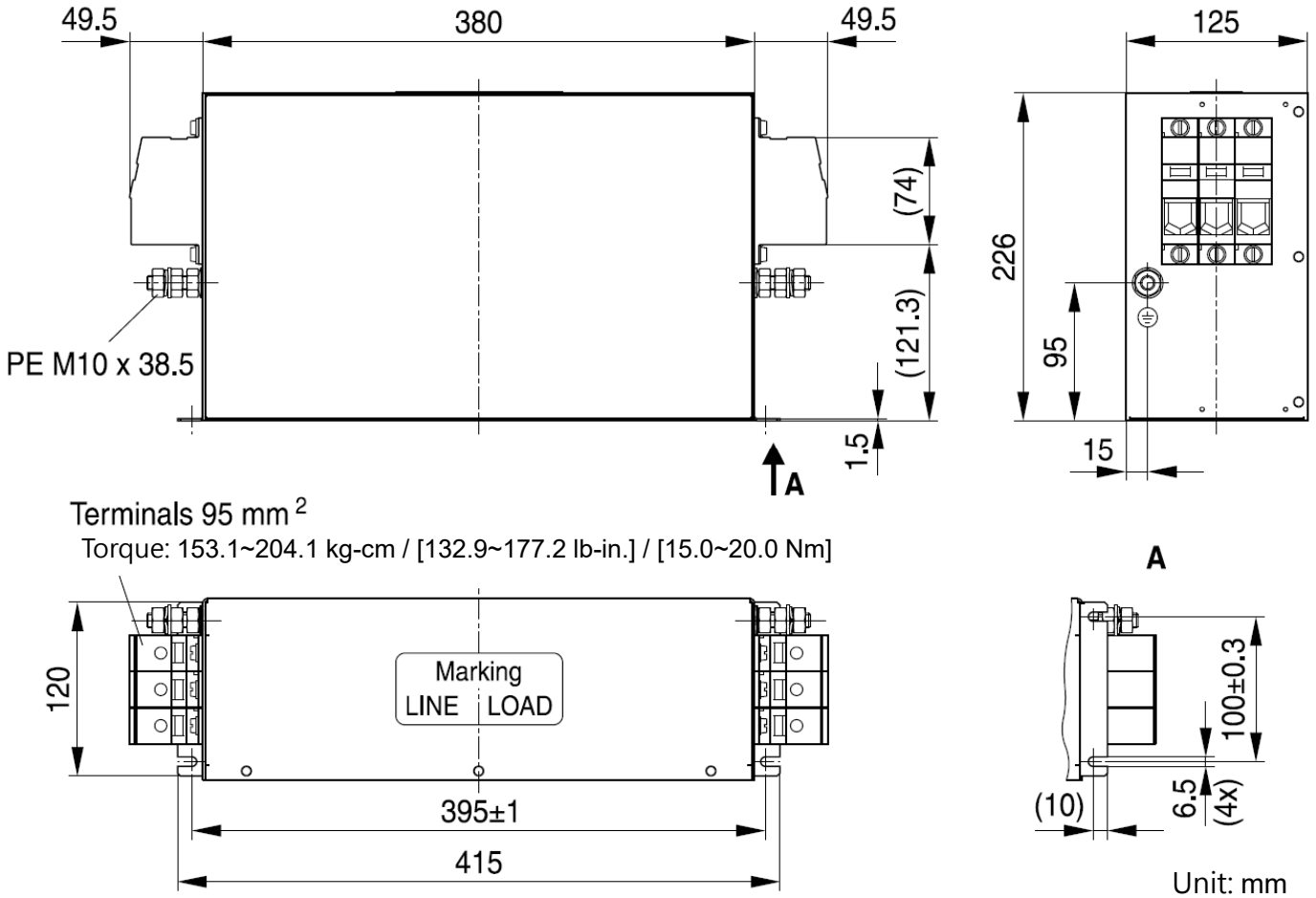

Model name: B84143D0200R127

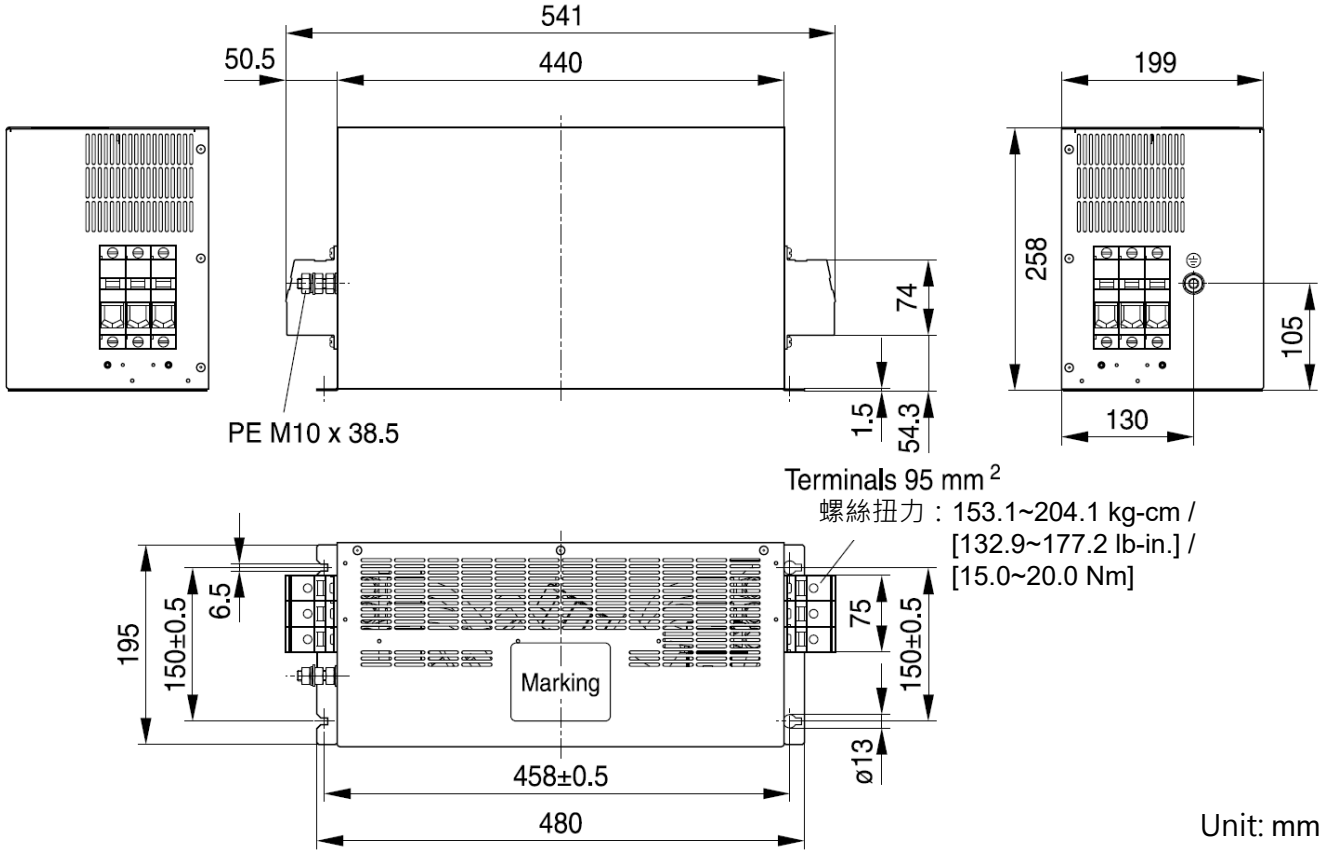

Model name: B84143B1600S021

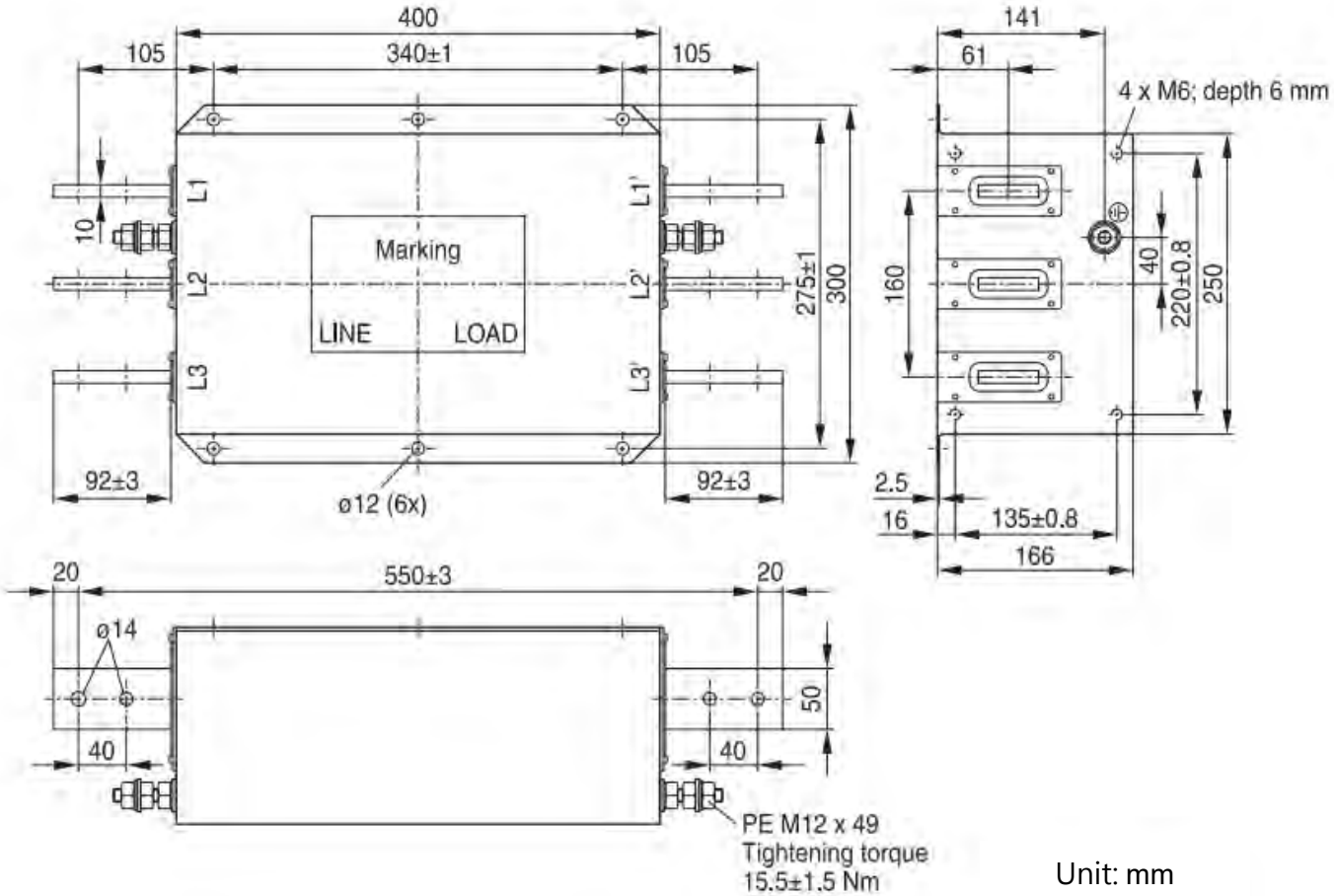

Model name: KMF370A

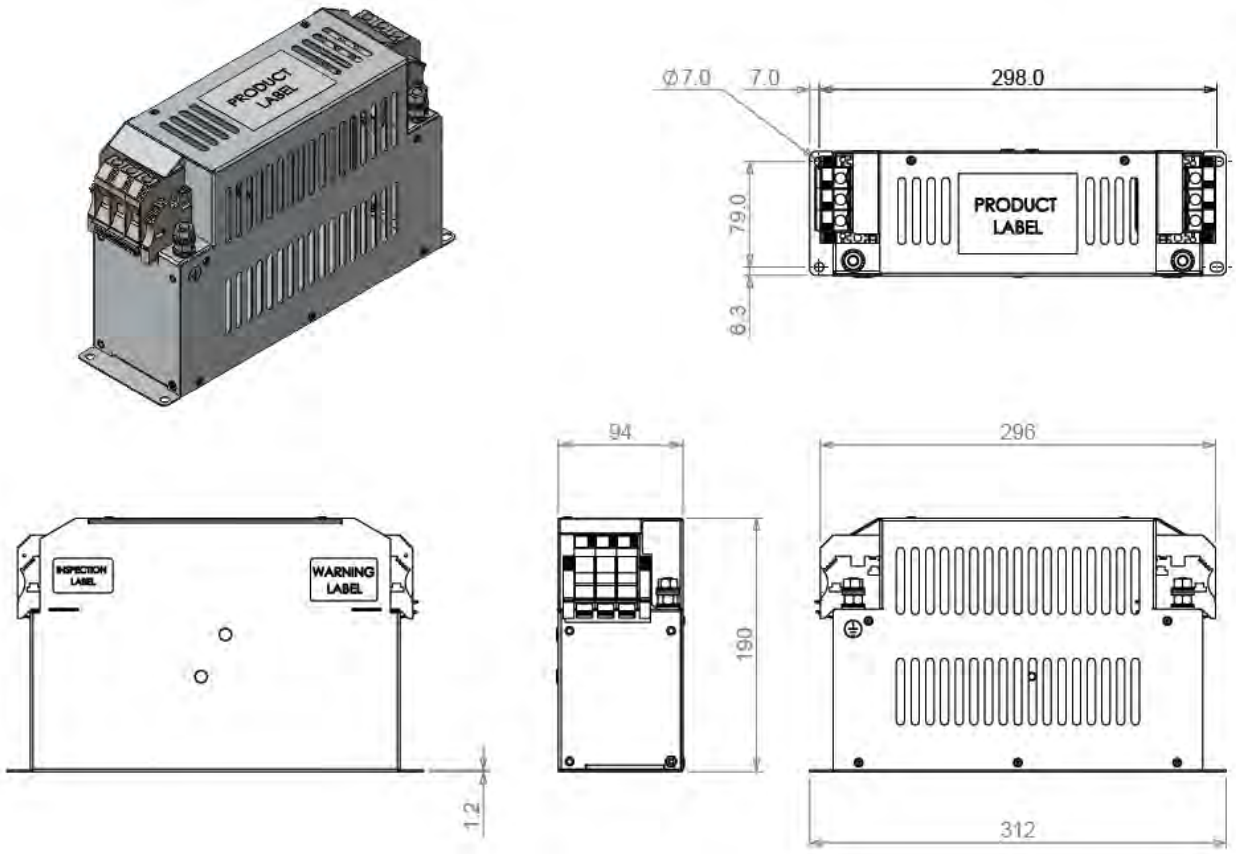

Unit: mm

Model name: KMF3100A

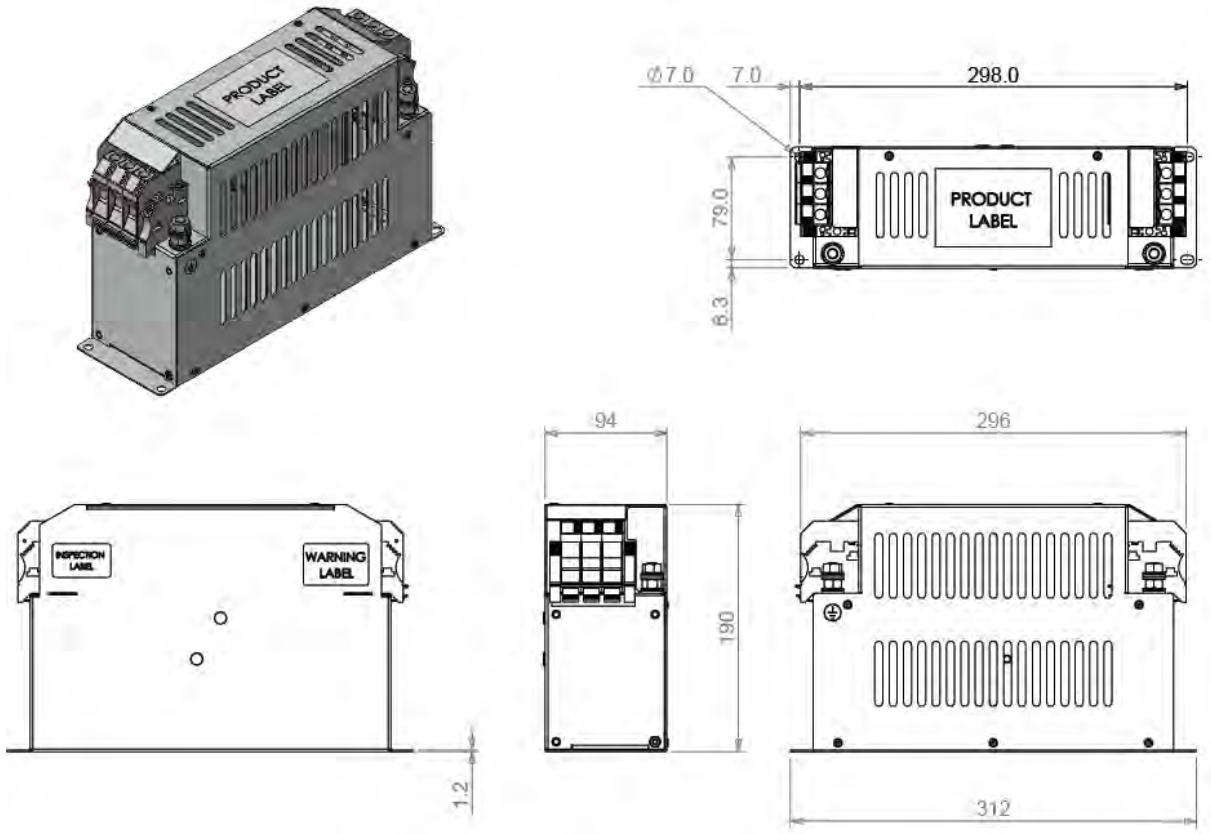

Unit: mm

The table below is the maximum shielded cable length for drive models with built-in EMC filters. You can choose the corresponding shielded cable length according to the required noise emission and electromagnetic interference class.

<table>
<tr><th colspan="2">EMC built-in model</th><th rowspan="2">Rated current (HD)</th><th colspan="2">Comply with EMC (IEC 61800-3) Class C3</th><th colspan="2">Comply with EMC (IEC 61800-3) Class C2</th></tr>
<tr><th>Frame</th><th>Model</th><th>Shielded cable length</th><th>Fc</th><th>Shielded cable length</th><th>Fc</th></tr>
<tr><td rowspan="6">A</td><td>VFD007C43EA-21</td><td>4.3</td><td rowspan="9">30m</td><td rowspan="9">≤ 8kHz</td><td rowspan="9">10m</td><td rowspan="9">≤ 8kHz</td></tr>
<tr><td>VFD015C43EA-21</td><td>5.9</td></tr>
<tr><td>VFD022C43EA-21</td><td>8.7</td></tr>
<tr><td>VFD037C43EA-21</td><td>14</td></tr>
<tr><td>VFD040C43EA-21</td><td>15.5</td></tr>
<tr><td>VFD055C43EA-21</td><td>17</td></tr>
<tr><td rowspan="3">B</td><td>VFD075C43EA-21</td><td>20</td></tr>
<tr><td>VFD110C43EA-21</td><td>26</td></tr>
<tr><td>VFD150C43EA-21</td><td>35</td></tr>
<tr><td rowspan="3">C</td><td>VFD185C43EA-21</td><td>40</td><td rowspan="3">≤ 6kHz</td><td rowspan="3">≤ 6kHz</td></tr>
<tr><td>VFD220C43EA-21</td><td>47</td></tr>
<tr><td>VFD300C43EA-21</td><td>63</td></tr>
</table>

Table 7-82

* Shielded cable length of Frame A should be no longer than 30m and Frame B, C no longer than 50m to prevent cable length from being too long, which may cause built-in EMC filter malfunction due to overheat resulting from leakage current and larger wires parasitic capacitance.

EMC Filter Installation

All electrical equipment, including AC motor drives, will generate high frequency/ low frequency noise and will interfere with peripheral equipment by radiation or conduction when in operation. By using an EMC filter with correct installation, much interference can be eliminated. It is recommended to use DELTA EMC filter to have the best interference elimination performance.

We assure that it can comply with following rules when AC motor drive and EMC filter are installed and wired according to user manual:

1. EN61000-6-4
2. EN61800-3: 1996
3. EN55011 (1991) Class A Group 1

General precaution

To ensure EMC filter can maximize the effect of suppressing the interference of AC motor drive, the installation and wiring of AC motor drive should follow the user manual. In addition, be sure to observe the following precautions:

1. EMC filter and AC motor drive should be installed on the same metal plate.
2. Please install AC motor drive on footprint EMC filter or install EMC filter as close as possible to the AC motor drive.
3. Please wire as short as possible.
4. Metal plate should be grounded.
5. The cover of EMC filter and AC motor drive or grounding should be fixed on the metal plate and the contact area should be as large as possible.

Choose suitable motor cable and precautions

Improper installation and choice of motor cable will affect the performance of EMC filter. Be sure to observe the following precautions when selecting motor cable.

6. Use the cable with shielding (double shielding is the best).
7. The shielding on both ends of the motor cable should be grounded with the minimum length and maximum contact area.
8. Remove any paint on metal saddle for good ground contact with the plate and shielding.

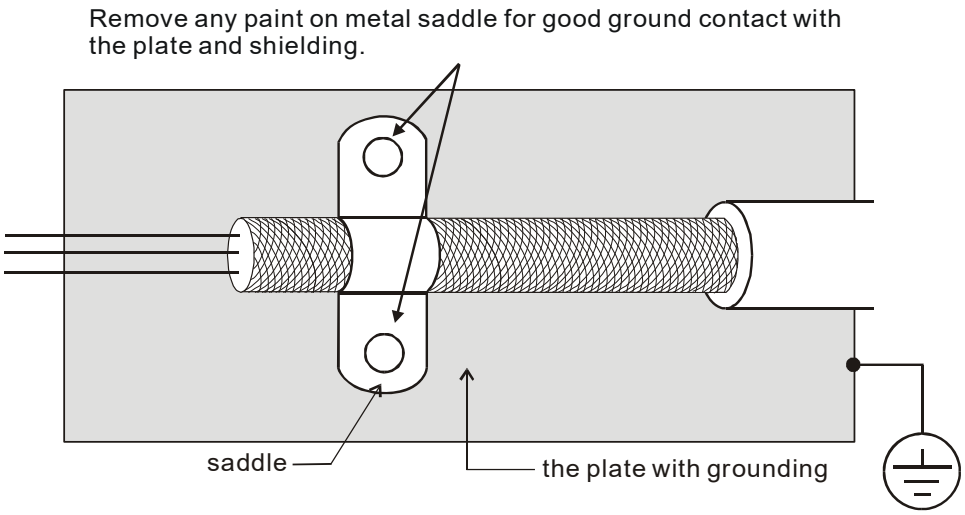

Figure 1

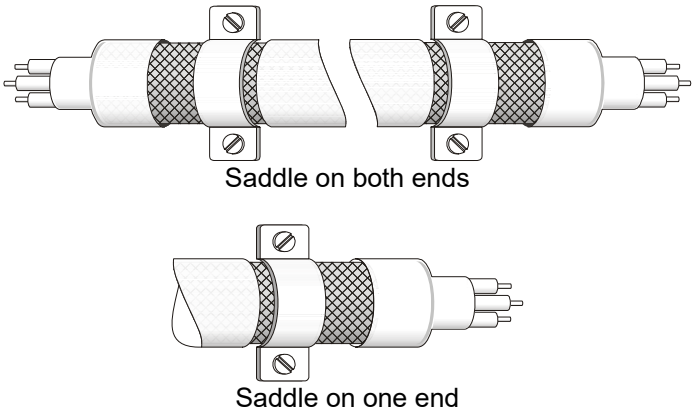

Figure 2

Capacitor Filter (Applicable to 230V/ 460V models)

Capacitor Filter is a simple filter accessory, installed to provide simple filtering and eliminating interference.

Installation

Installed on the input side, connect each cable on terminal R, S, T and PE. As shown in the figure below. (Please do NOT install the capacitor filter on the output side.)

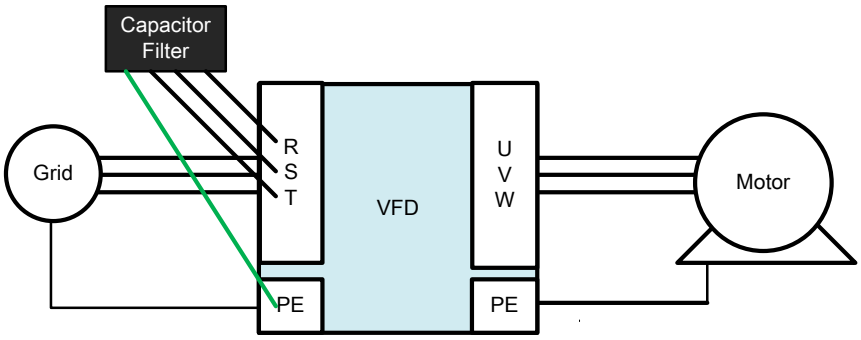

Model / Specification

Model	Capacitance of the capacitor	Temperature
CXY101-43A	Cx：1uF±20% Cy：1uF±20%	-40~+85°C

Unit: mm [inch]

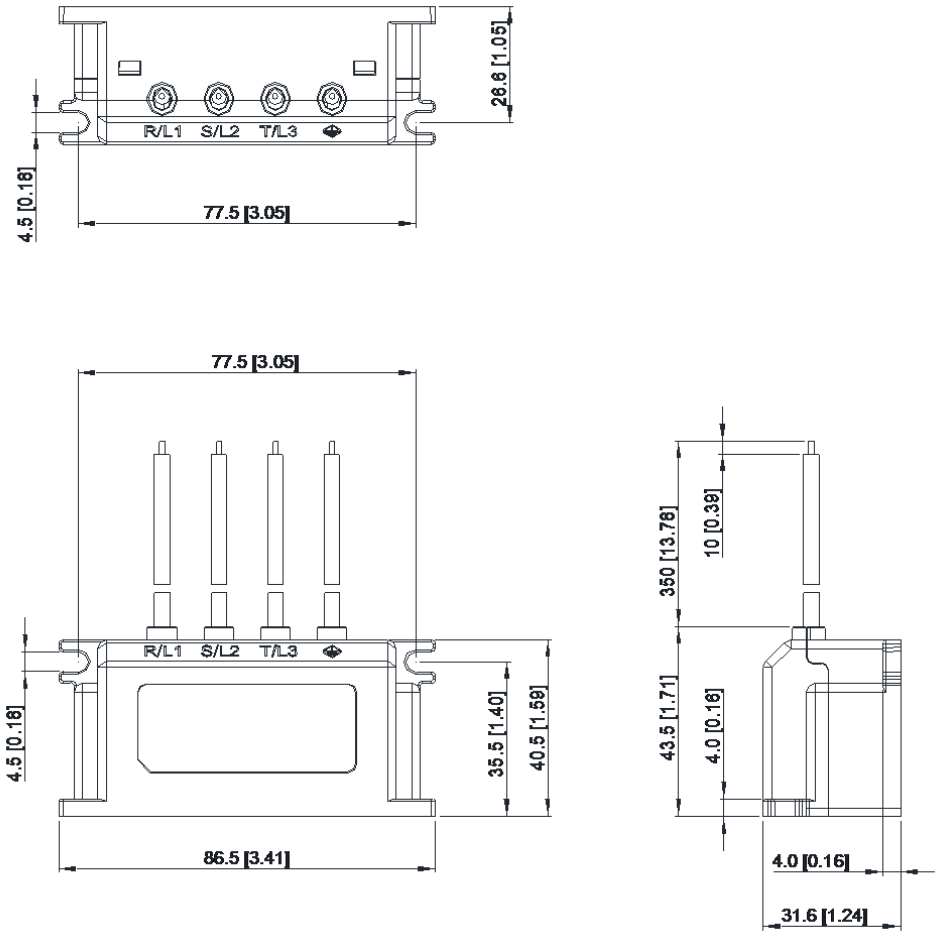

7-7 Panel Mounting (MKC-KPPK)

For MKC-KPPK model, user can choose wall mounting or embedded mounting, protection level is IP66.

Applicable to the digital keypads (KPC-CC01 & KPC-CE01)

Wall Mounting

accessories*1

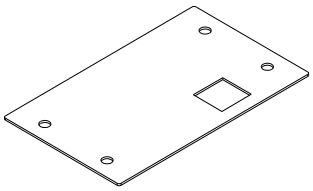

Screw *4 ~M4*p 0.7 *L8mm
Torque: 10~12 kg-cm / [8.7~10.4 lb-in.] / [1.0~1.2 Nm]

Panel cutout dimension Unit: mm [inch]

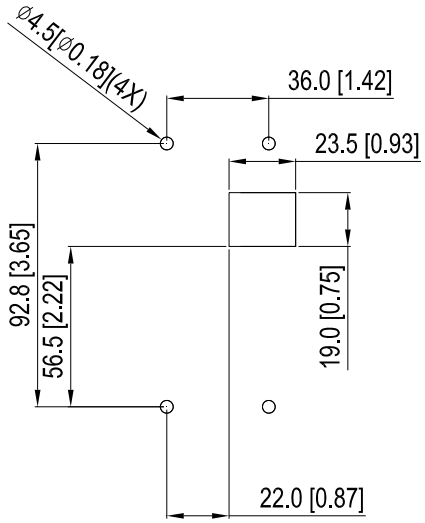

Embedded Mounting

accessories*2

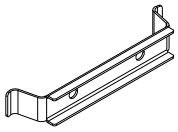

Screw *4 ~M4*p 0.7 *L8mm
Torque: 10~12 kg-cm / [8.7~10.4 lb-in.] / [1.0~1.2 Nm]

Panel cutout dimension Unit: mm [inch]

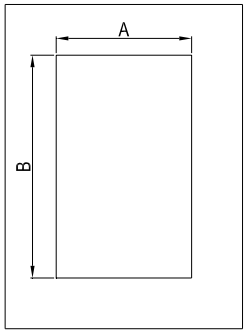

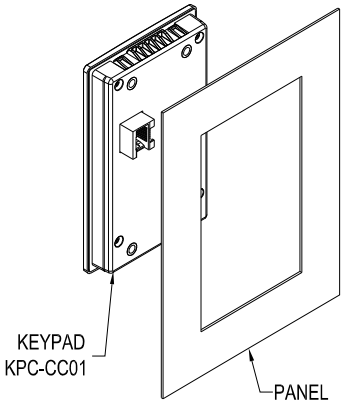

Normal cutout dimension

Panel thickness	1.2mm	1.6mm	2.0mm
A	66.4 [2.614]		
B	110.2 [4.339]	111.3 [4.382]	112.5 [4.429]

*Deviation: ±0.15mm /±0.0059inch

Table 7-65

Cutout dimension (Waterproof level: IP66)

Panel thickness	1.2mm	1.6mm	2.0mm
A	66.4 [2.614]		
B	110.8 [4.362]		

*Deviation: ±0.15mm / ±0.0059inch

Table 7-66

Wall Mounting	Embedded Mounting
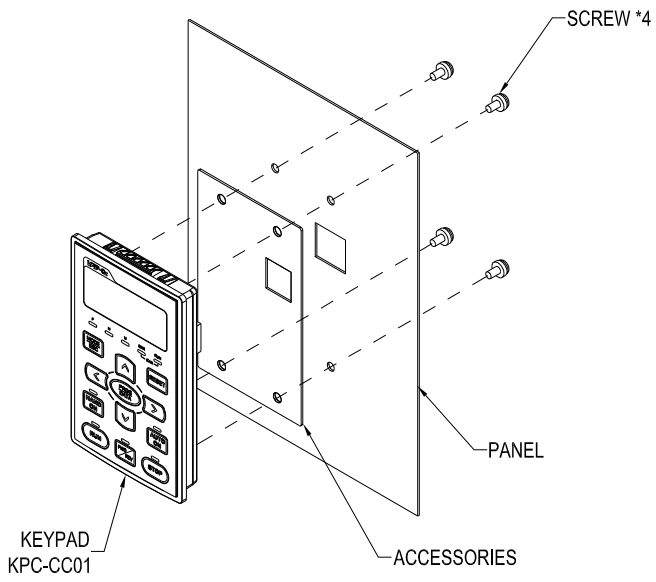	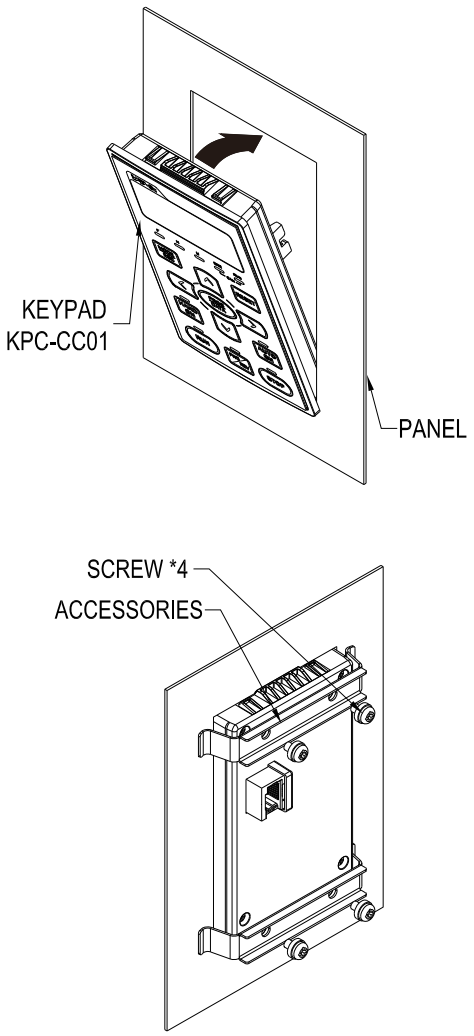

7-8 Conduit Box Kit

■ Appearance

Conduit box kit is optional for VFDXXXCXXA-00 (Frame D and above) and VFDXXXC43S-00, the protection will be IP20/ NEMA1/ UL TYPE1 after installation.

Frame D0

Applicable models

VFD370C43S-00; VFD450SC43S-00

Model number『MKC-D0N1CB』

ITEM	Description	Qty.
1	Screw M5*0.8*10L	4
2	Bushing Rubber 28	2
3	Bushing Rubber 44	2
4	Bushing Rubber 73	2
5	Conduit box cover	1
6	Conduit box base	1

Table 7-67

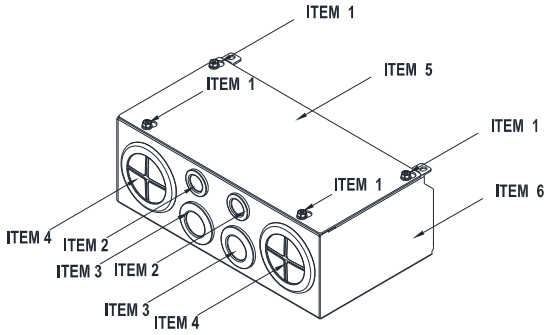

Frame D

Applicable models

VFD300C23A-00; VFD370C23A-00; VFD550C43A-00; VFD750C43A-00; VFD450C63B-00; VFD550C63B-00

Model number『MKC-DN1CB』

ITEM	Description	Qty.
1	Screw M5*0.8*10L	4
2	Bushing Rubber 28	2
3	Bushing Rubber 44	2
4	Bushing Rubber 88	2
5	Conduit box cover	1
6	Conduit box base	1

Table 7-68

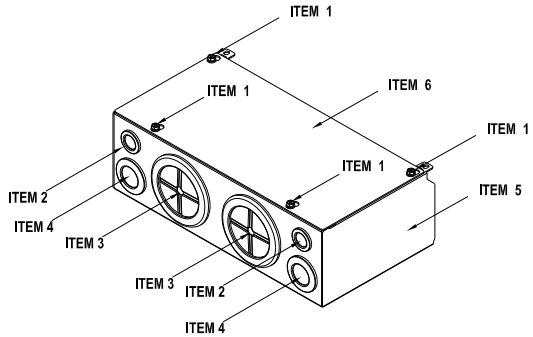

Frame E

Applicable models

VFD450C23A-00; VFD550C23A-00; VFD750C23A-00; VFD900C43A-00; VFD1100C43A-00; VFD750C63B-00; VFD900C63B-00; VFD1100C63B-00; VFD1320C63B-00

Model number『MKC-EN1CB』

ITEM	Description	Qty.
1	Screw M5*0.8*10L	6
2	Bushing Rubber 28	2
3	Bushing Rubber 44	4
4	Bushing Rubber 100	2
5	Conduit box cover	1
6	Conduit box base	1

Table 7-69

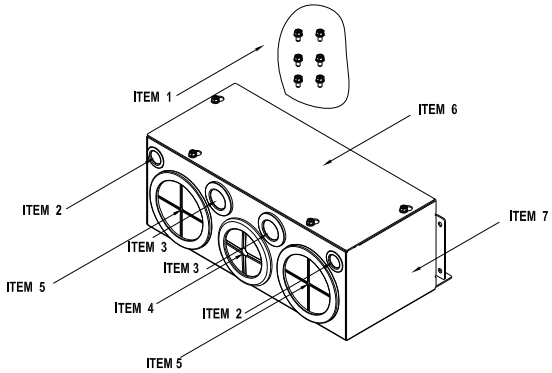

Frame F

Applicable models

VFD900C23A-00; VFD1320C43A-00; VFD1600C43A-00; VFD1600C63B-00; VFD2000C63B-00

Model number『MKC-FN1CB』

ITEM	Description	Qty.
1	Screw M5*0.8*10L	8
2	Bushing Rubber28	2
3	Bushing Rubber 44	4
4	Bushing Rubber 100	2
5	Conduit box cover	1
6	Conduit box base	1

Table 7-70

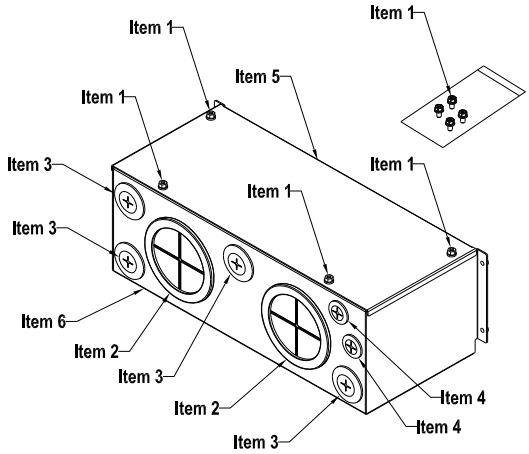

Frame G

Applicable models

VFD1850C43A-00; VFD2000C43A-00; VFD2200C43A-00; VFD2500C43A-00; VFD2500C63B-00; VFD3150C63B-00

Model number『MKC-GN1CB』

ITEM	Description	Qty.
1	Screw M5*0.8*10L	12
2	Bushing Rubber 28	2
3	Bushing Rubber 44	2
4	Bushing Rubber 130	3
5	Conduit box cover	1
6	Conduit box base	1

Table 7-71

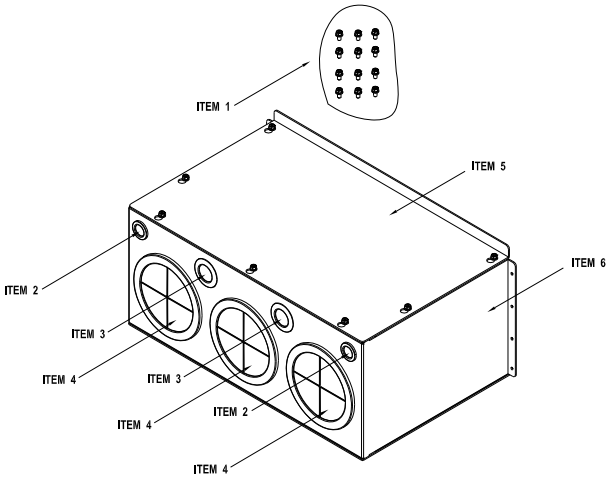

Frame H

Applicable models

VFD2800C43A-00; VFD3150C43A-00; VFD3550C43A-00; VFD4000C43A-00; VFD4500C43A-00; VFD5000C43A-00; VFD5600C43A-00

Model number『MKC-HN1CB』

ITEM	Description	Qty.
1	Screw M6*1.0*25L	8
2	Screw M8*1.25*30L	3
3	NUT M8	4
4	NUT M10	4
5	Bushing Rubber 28	4
6	Bushing Rubber 44	2
7	Bushing Rubber 130	4
8	Conduit box cover 1	1
9	Conduit box cover 2	2
10	Conduit box cover 3	2
11	Conduit box cover 4	2
12	Conduit box base	1
13	Accessories 1	2
14	Accessories 2	1

Table 7-72

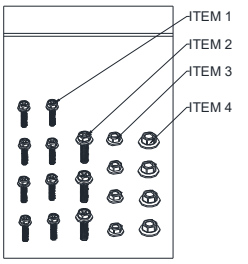

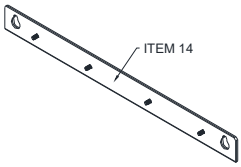

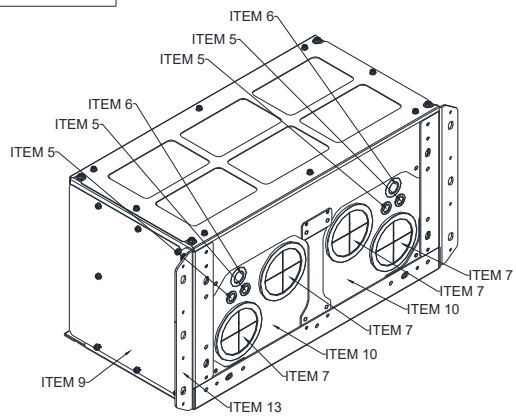

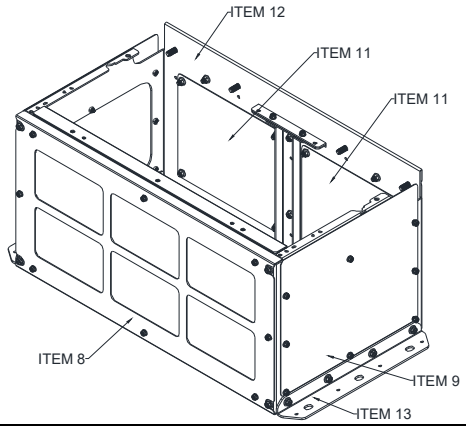

■ Conduit Box Installation

Frame D0

1. Loosen the cover screws and press the tabs on each side of the cover to remove the cover, as shown in the following figure.
   Screw torque: 12~15 kg-cm / [10.4~13 lb-in.] / [1.2~1.5 Nm]

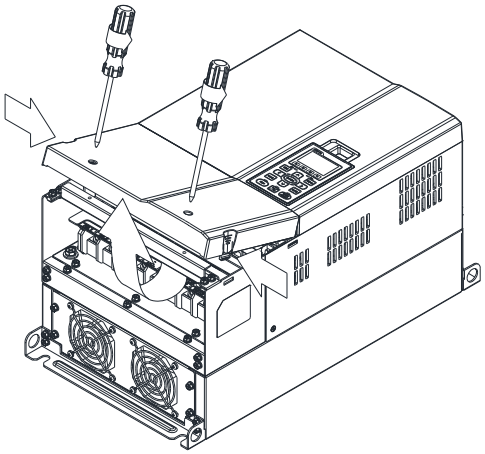

2. Remove the 5 screws shown in the following figure.
   Screw torque: 24~26 kg-cm / [20.8~22.6 lb-in.] / [2.4~2.5 Nm]

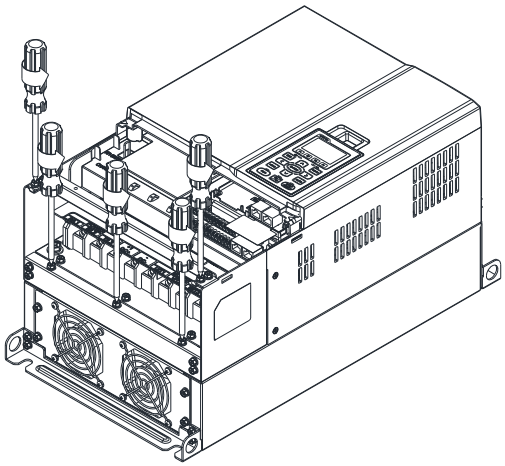

3. Install the conduit box by fasten the 5 screws shown in the following figure.
   Screw torque: 24~26 kg-cm / [20.8~22.6 lb-in.] / [2.4~2.5 Nm]

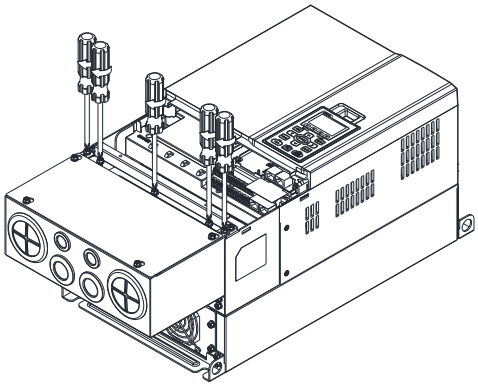

4. Fasten the 2 screws shown in the following figure.
   Screw torque: 12~15 kg-cm / [10.4~13 lb-in.] / [1.2~1.5 Nm]

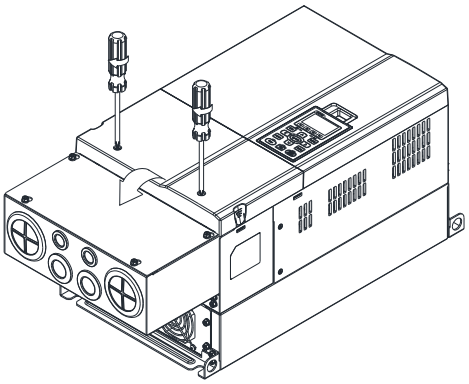

Frame D

1. Loosen the cover screws and press the tabs on each side of the cover to remove the cover, as shown in the following figure.
   Screw torque: 12~15 kg-cm / [10.4~13 lb-in.] / [1.2~1.5 Nm]

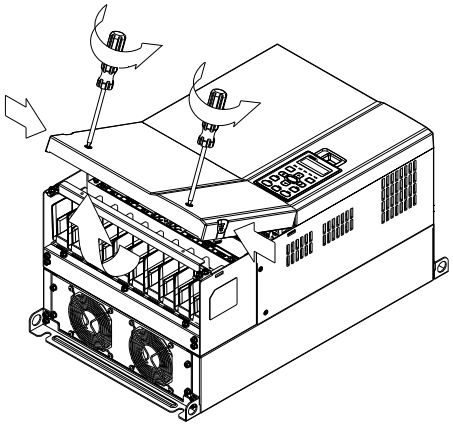

2. Remove the 5 screws shown in the following figure.
   Screw torque: 24~26 kg-cm / [20.8~22.6 lb-in.] / [2.4~2.5 Nm]

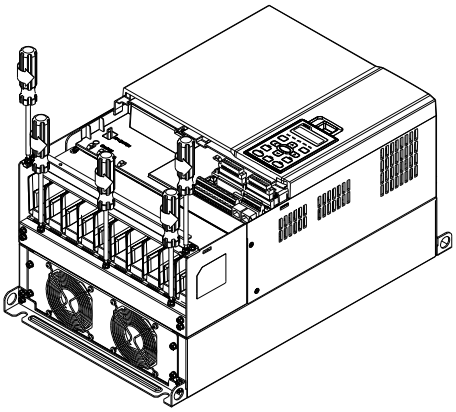

3. Install the conduit box by fasten the 5 screws shown in the following figure.
   Screw torque: 24~26 kg-cm / [20.8~22.6 lb-in.] / [2.4~2.5 Nm]

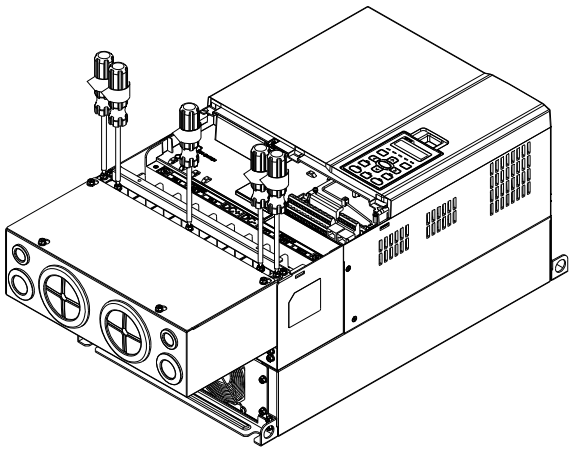

4. Fasten the 2 screws shown in the following figure. Screw torque: 12~15 kg-cm / [10.4~13 lb-in.] / [1.2~1.5 Nm]

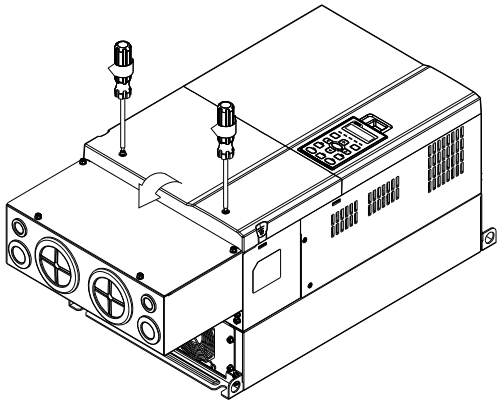

Frame E

1. Loosen the 4 cover screws and lift the cover;
   Screw torque: 12~15 kg-cm / [10.4~13 lb-in.] / [1.2~1.5 Nm]

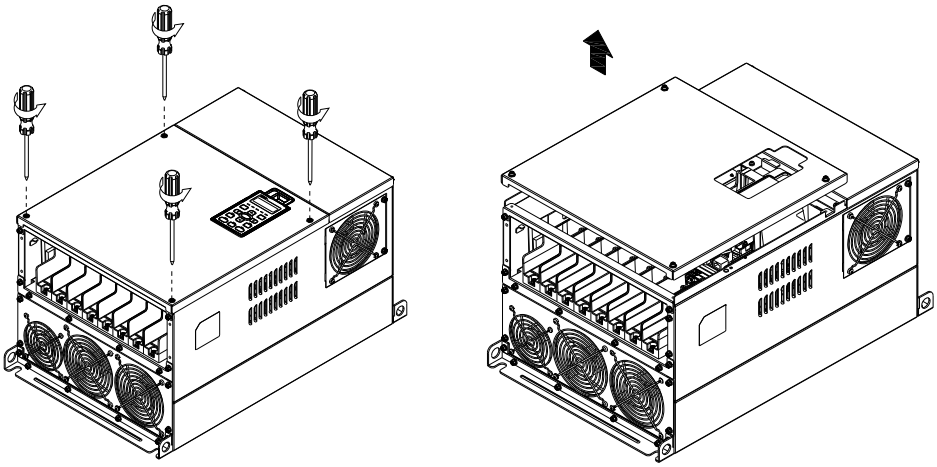

2. Fasten the 6 screws shown in the following figure and place the cover back to the original position.
   Screw torque: 24~26 kg-cm / [20.8~22.6 lb-in.] / [2.4~2.5 Nm]

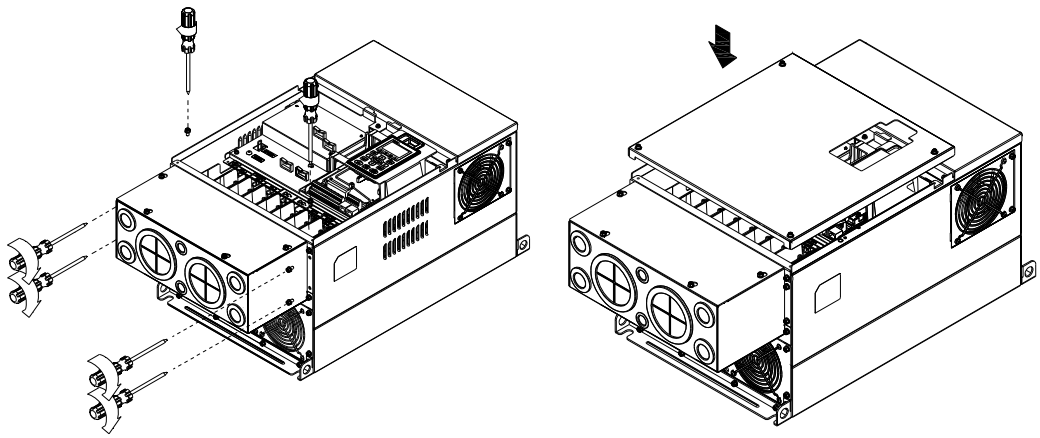

3. Fasten the 4 screws shown in the following figure.
   Screw torque: 12~15 kg-cm / [10.4~13 lb-in.] / [1.2~1.5 Nm]

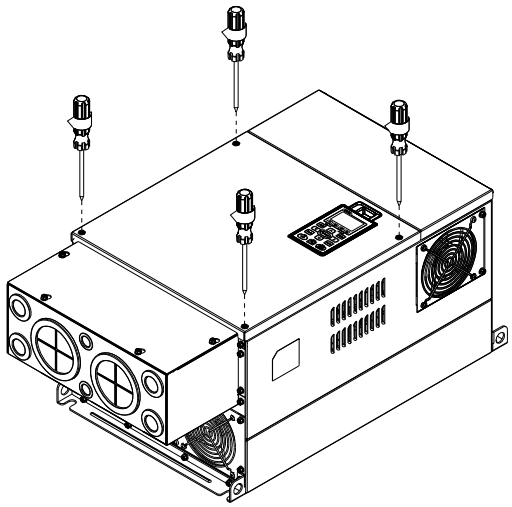

Frame F

1. Loosen the cover screws and press the tabs on each side of the cover to remove the cover, as shown in the following figure.
   Screw torque: 12~15 kg-cm / [10.4~13 lb-in.] / [1.2~1.5 Nm]

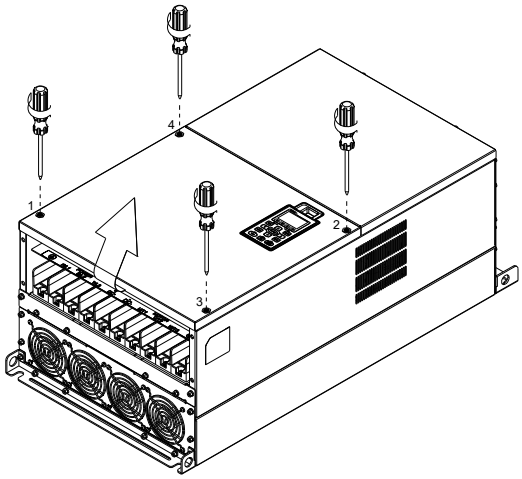

2. Install the conduit box by fastens the 4 screws, as shown in the following figure.
   Screw torque: 24~26 kg-cm / [20.8~22.6 lb-in.] / [2.4~2.5 Nm]

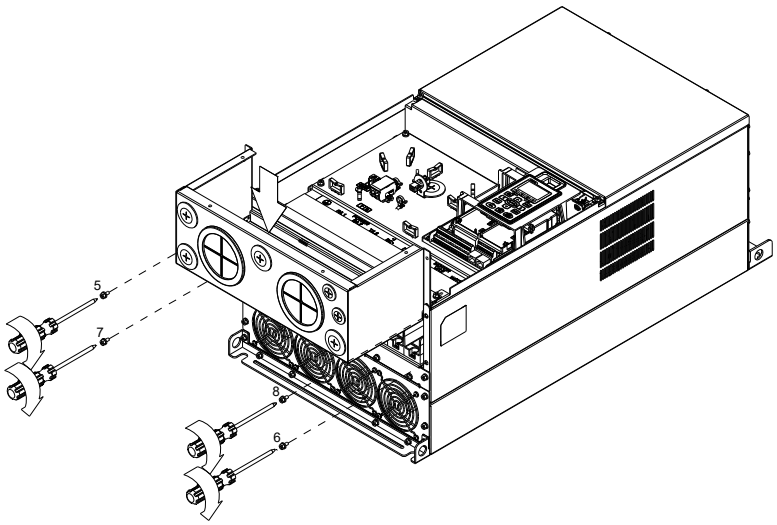

3. Install the conduit box by fasten all the screws shown in the following figure
   Screw 9~12 torque: 12~15 kg-cm / [10.4~13 lb-in.] / [1.2~1.5 Nm]
   Screw 13~16 torque: 24~26 kg-cm / [20.8~22.6 lb-in.] / [2.4~2.5 Nm]

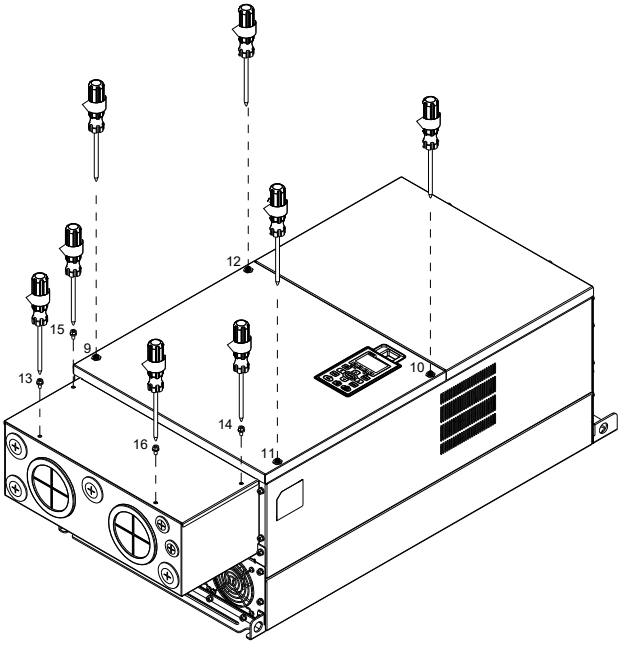

Frame G

1. On the conduit box, loosen 7 of the cover screws and remove the cover
   Screw torque: 24~26 kg-cm / [20.8~22.6 lb-in.] / [2.4~2.5 Nm]
2. On the drive, loosen 4 of the cover screws and press the tabs on each side of the cover to remove the cover, as shown in the following figure.
   Screw torque: 12~15 kg-cm / [10.4~13 lb-in.] / [1.2~1.5 Nm]

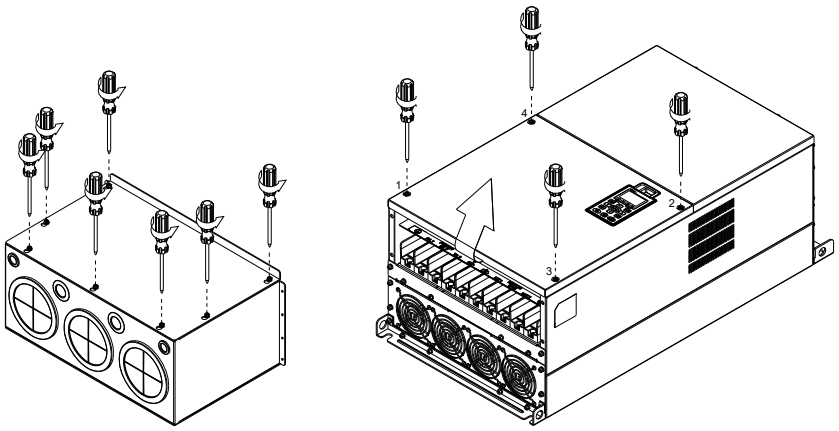

3. Remove the top cover and loosen the screws.
   M5 Screw torque: 24~26 kg-cm / [20.8~22.6 lb-in.] / [2.4~2.5 Nm]
   M8 Screw torque: 100~120 kg-cm / [86.7~104.1 lb-in.] / [9.8~11.8 Nm]

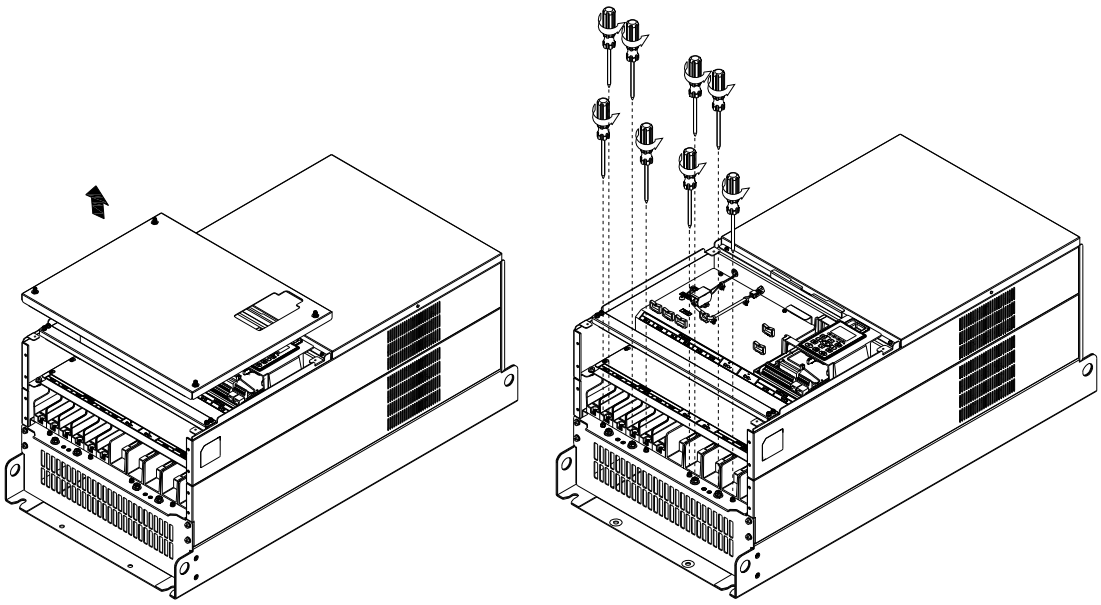

4. Install the conduit box by fastening all the screws shown in the following figure.
   M5 Screw torque: 24~26 kg-cm / [20.8~22.6 lb-in.] / [2.4~2.5 Nm]
   M8 Screw torque: 100~120 kg-cm / [86.7~104.1 lb-in.] / [9.8~11.8 Nm]

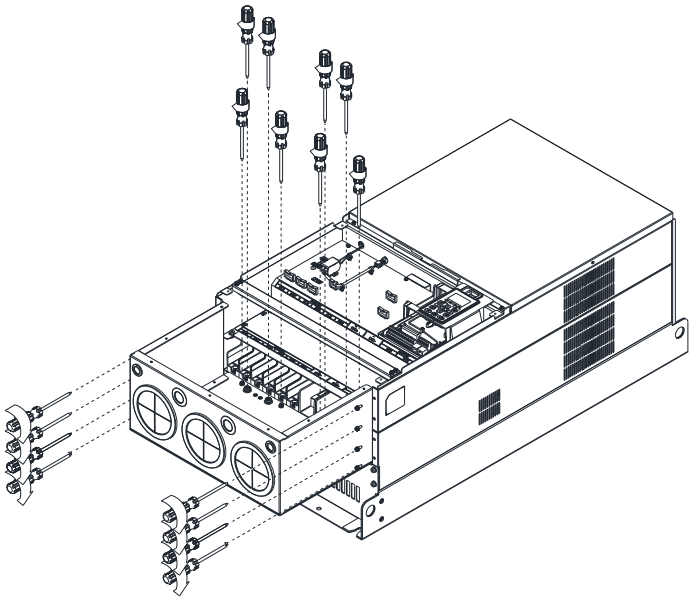

5. Fasten all the screws.
   Screw torque: 24~26 kg-cm / [20.8~22.6 lb-in.] / [2.4~2.5 Nm]

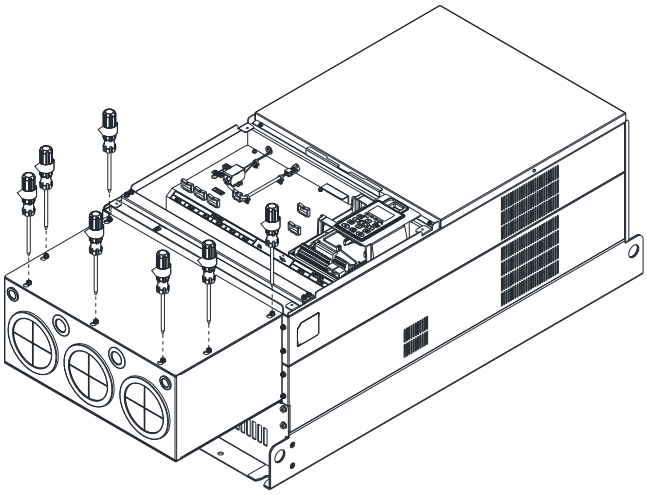

6. Place the cover back to the top and fasten the screws (as shown in the figure).
   Screw torque: 12~15 kg-cm / [10.4~13 lb-in.] / [1.2~1.5 Nm]

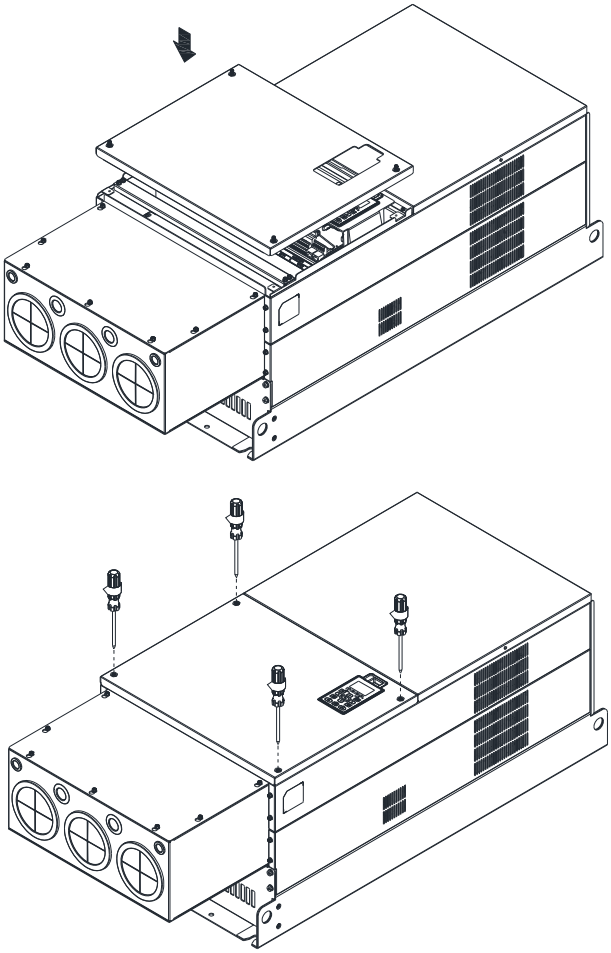

Frame H

Assembly for Frame H3 (Conduit Box)

1. Loosen the 3 screws and remove the cover of conduit box H3 as preparation.

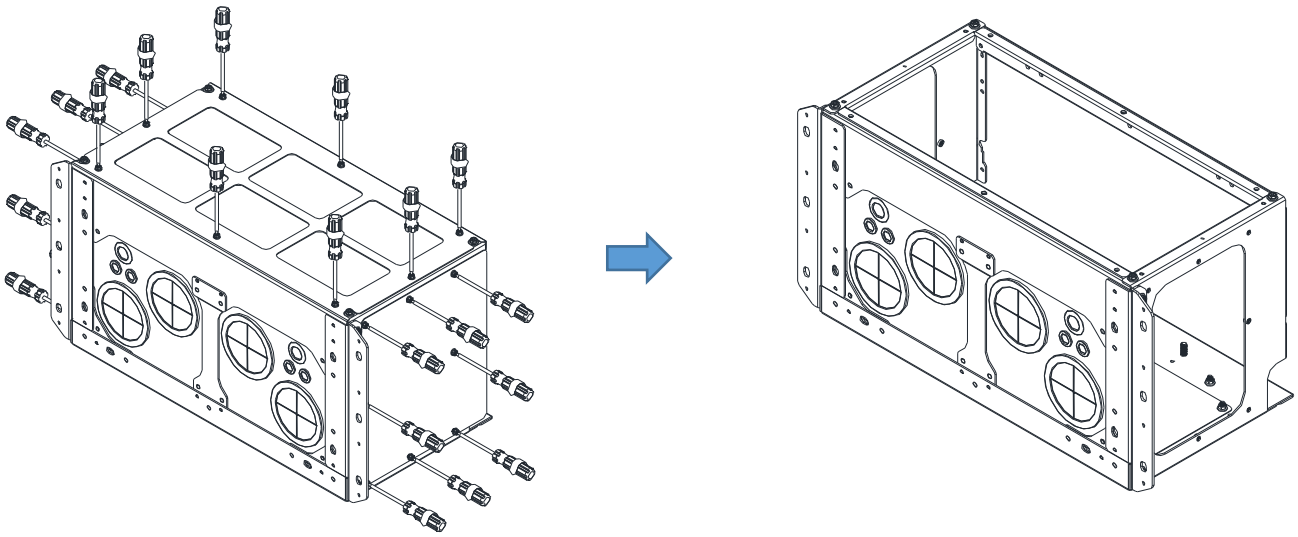

2. Loosen the screws as below figure shown.

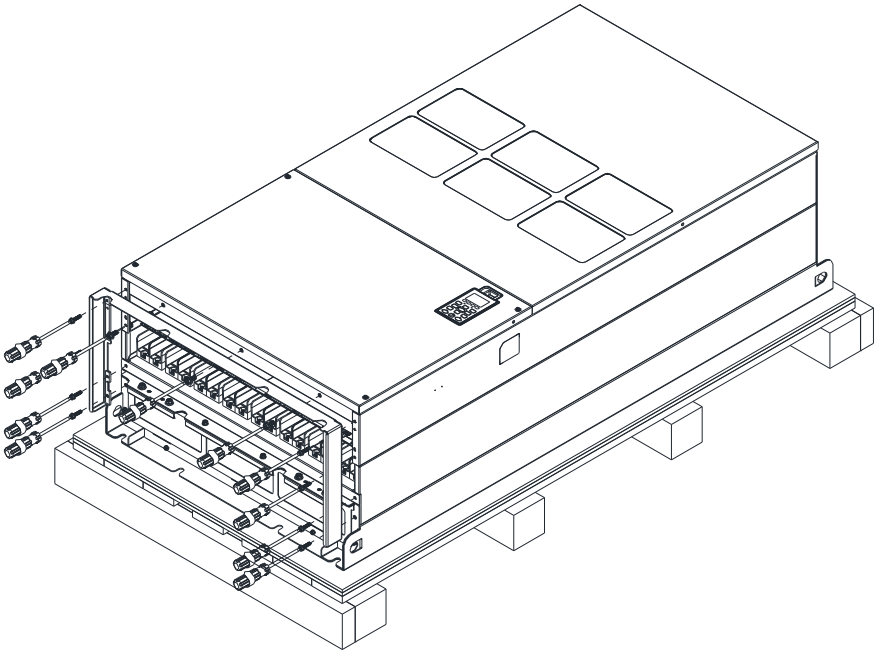

3. Fasten the M6 screws to locations shown in the following figure.
   Screw Torque: 35~45 kg-cm / [30.3~39 lb-in.] / [3.4~4.4 Nm]

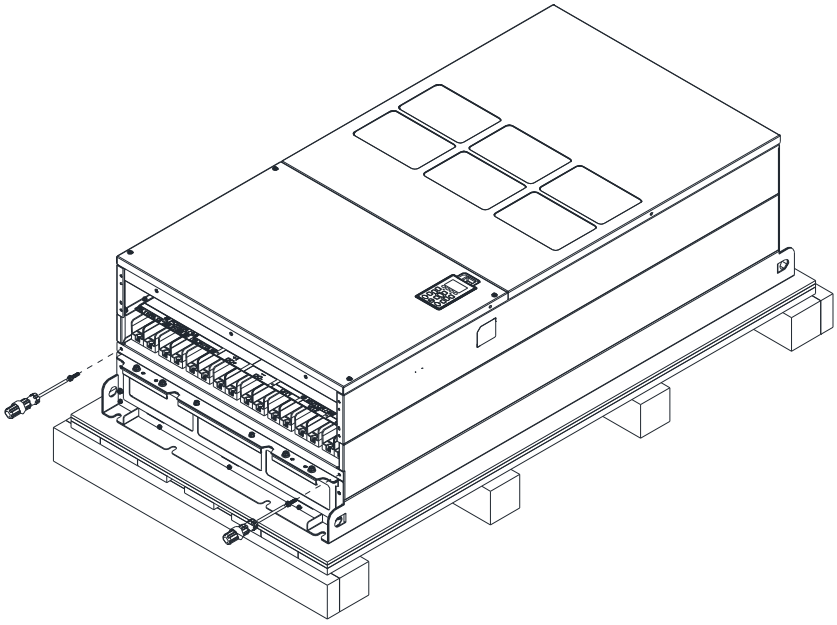

4. Install the conduit box by fasten all the screws shown in the following figure.
   Screw 1~6: M6 screw torque: 55~65 kg-cm / [47.7~56.4 lb-in] / [5.4~6.4 Nm]
   Screw 7~9: M8 screw torque: 100~110 kg-cm / [86.7~95.4 lb-in] / [9.8~10.8 Nm]
   Screw 10~13: M10 screw torque: 250~300 kg-cm / [216.9~260.3 lb-in] / [24.5~29.4 Nm]
   Screw 14~17: M8 screw torque: 100~110 kg-cm / [86.7~95.4 lb-in] / [9.8~10.8 Nm]

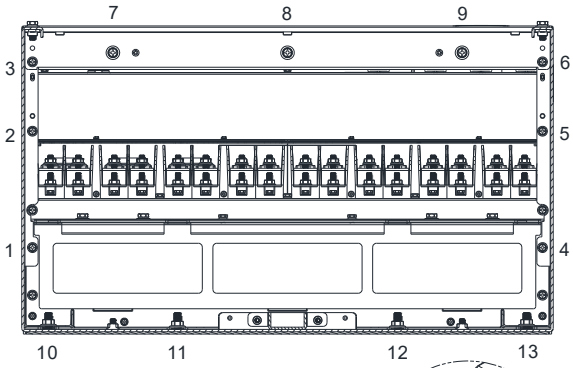

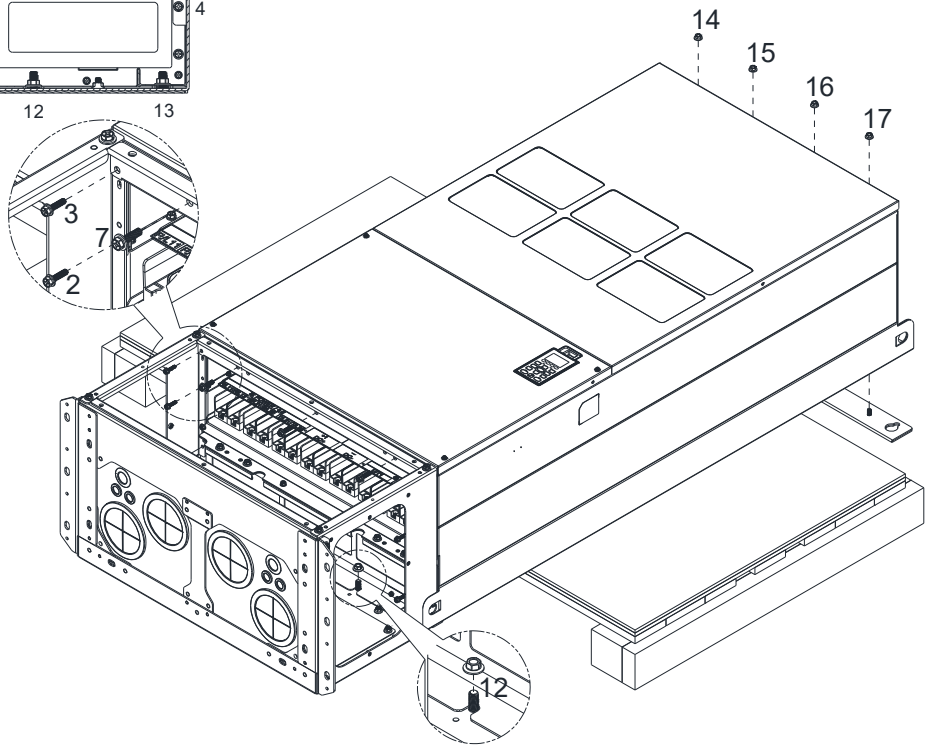

5. Fasten the 3 covers and screws, which were loosen from step 1, to the original location.
   Screw Torque: 35~45 kg-cm / [30.3~39 lb-in.] / [3.4~4.4 Nm]

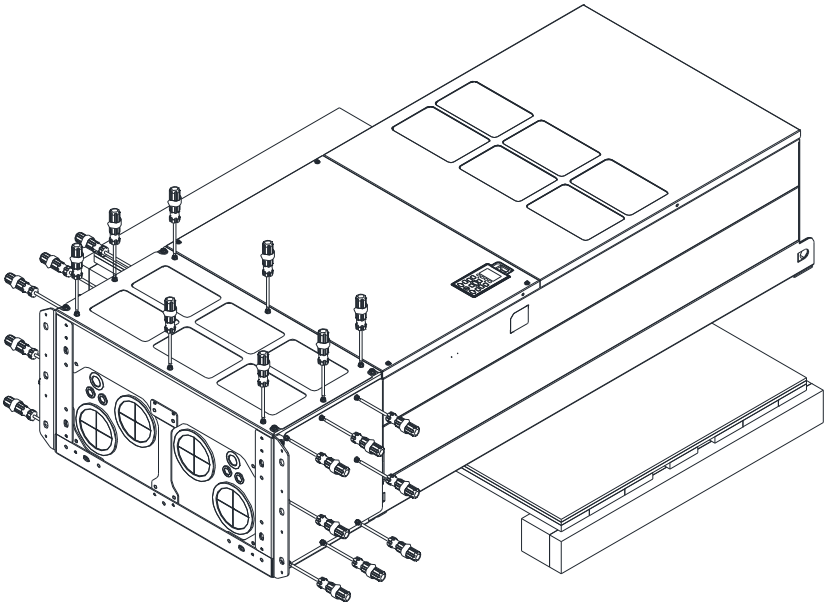

6. Installation complete.

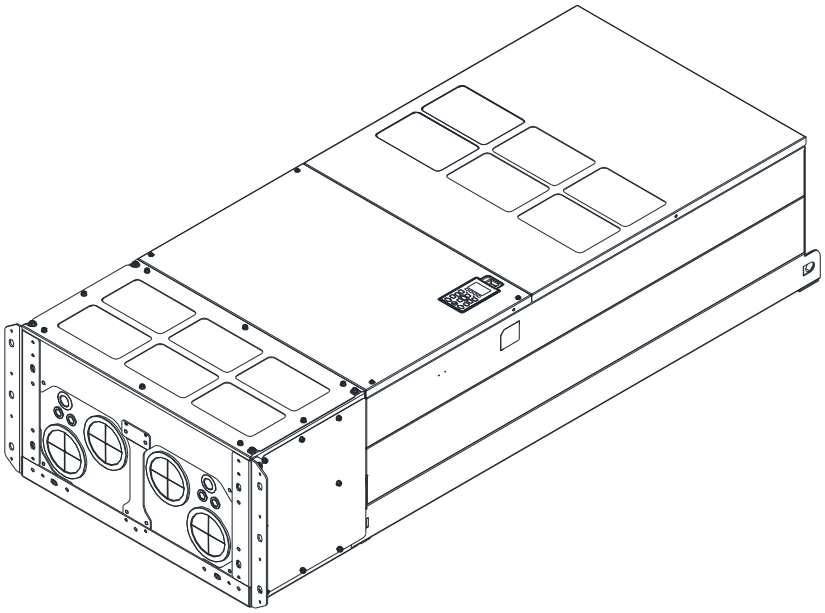

Assembly for Frame H2 (Straight Stand)

1. Loosen the 3 screws and remove the cover of conduit box.

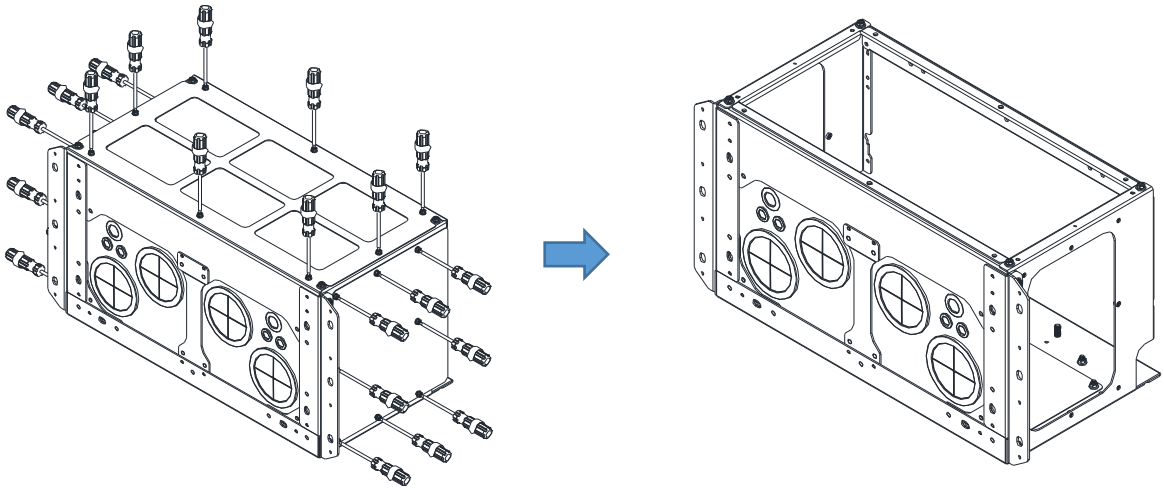

2. Remove the 4 covers of conduit box, and fasten the loosen screws back to the original location.

   Screw Torque: 100~110 kg-cm / [86.7~95.4 lb-in] / [9.8~10.8 Nm]

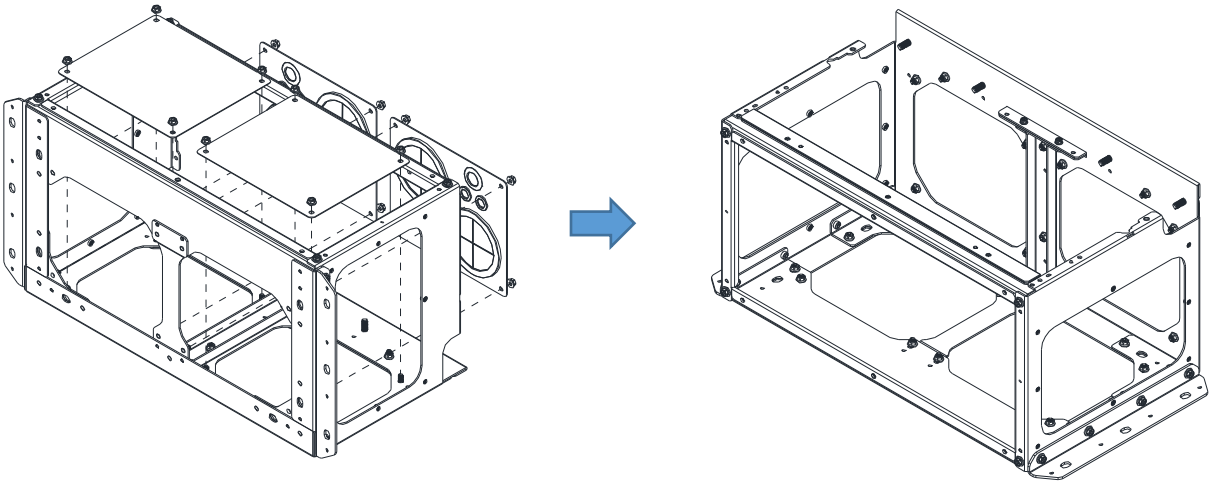

3. Remove the parts and screws as below figure shown.

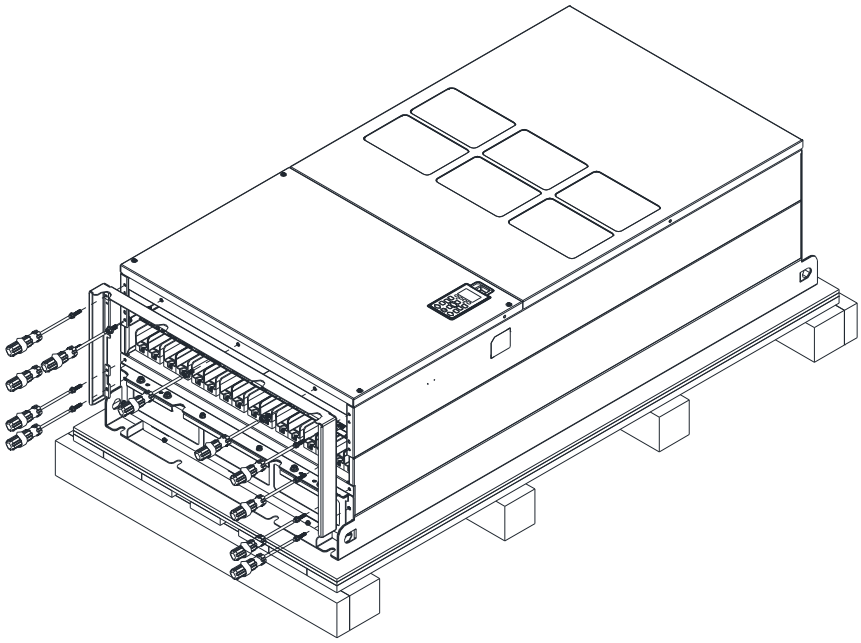

4. Fasten the M6 screws to locations shown in below figure.

Screw Torque: 35~45 kg-cm / [30.3~39 lb-in.] / [3.4~4.4 Nm]

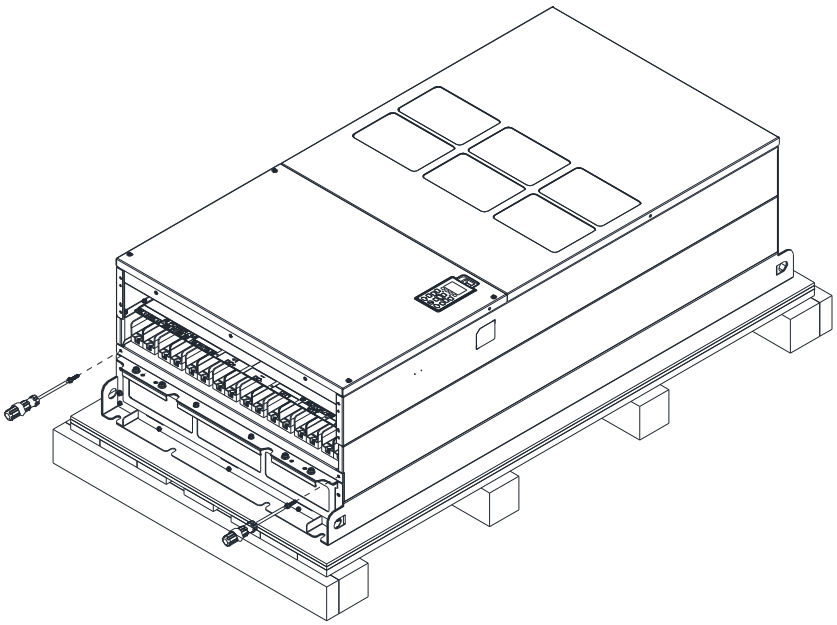

5. Install conduit box and accessories by fasten all the screws shown in the following figure.

Screw 1~6: M6 screw torque: 55~65 kg-cm / [47.7~56.4 lb-in] / [5.4~6.4 Nm]
Screw 7~9: M8 screw torque: 100~110 kg-cm / [86.7~95.4 lb-in] / [9.8~10.8 Nm]
Screw 10~13: M10 screw torque: 250~300 kg-cm / [216.9~260.3 lb-in] / [24.5~29.4 Nm]
Screw 14~17: M8 screw torque: 100~110 kg-cm / [86.7~95.4 lb-in] / [9.8~10.8 Nm]

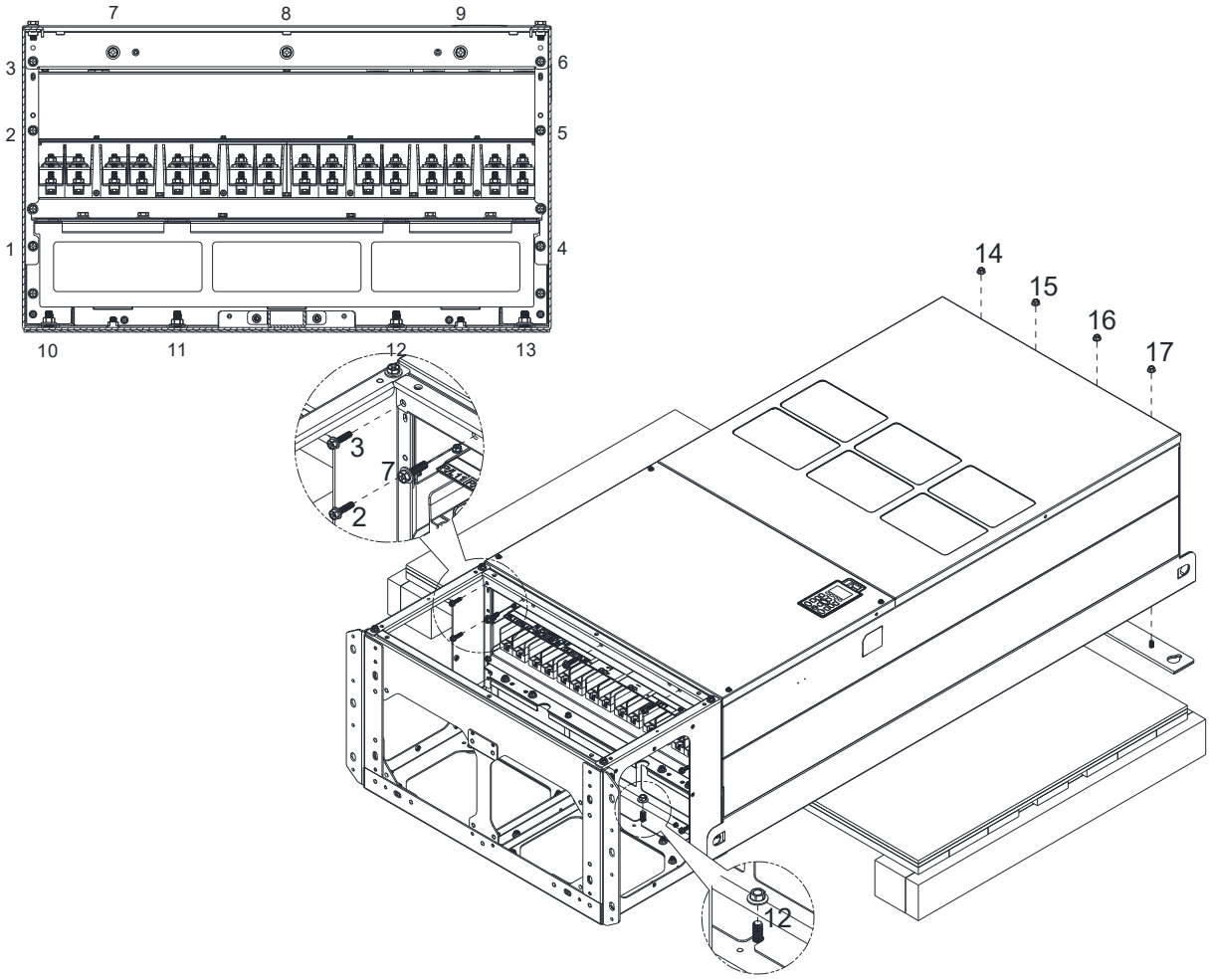

6. Installation complete.

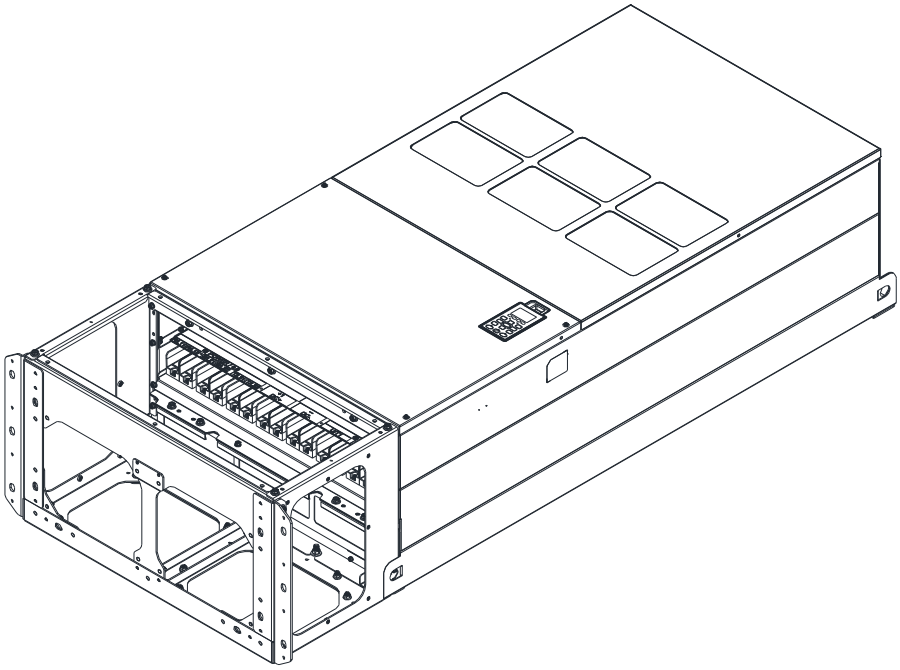

7-9 Fan Kit

■ Appearance

NOTE: The fan does not support hot swap function. For replacement, turn the power off before replacing the fan.

Frame A Applicable Model VFD015C23A-21; VFD022C23A-21; VFD037C23A-21; VFD022C43A-21; VFD037C43A-21; VFD040C43A-21; VFD055C43A-21; VFD022C4EA-21; VFD037C4EA-21; VFD040C4EA-21; VFD055C4EA-21; VFD015C53A-21; VFD022C53A-21; VFD037C53A-21	Heat sink Fan Model ”MKC-AFKM” 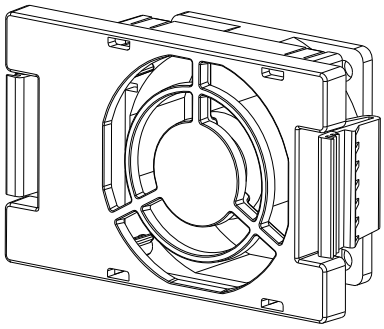
Frame B Applicable Model VFD055C23A-21; VFD075C43A-21; VFD075C4EA-21; VFD055C53A-21; VFD075C53A-21; VFD110C53A-21; VFD150C53A-21	Heat sink Fan Model ”MKC-BFKM1” 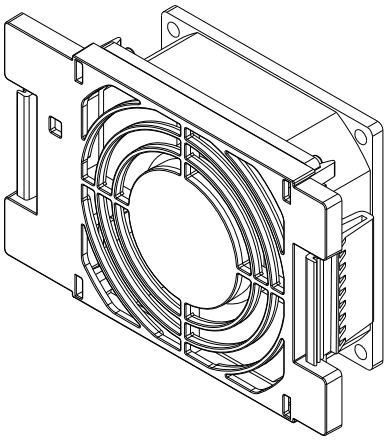
Frame B Applicable Model VFD075C23A-21; VFD110C23A-21; VFD110C43A-21; VFD150C43A-21; VFD110C4EA-21; VFD150C4EA-21	Heat sink Fan Model ”MKC-BFKM2” 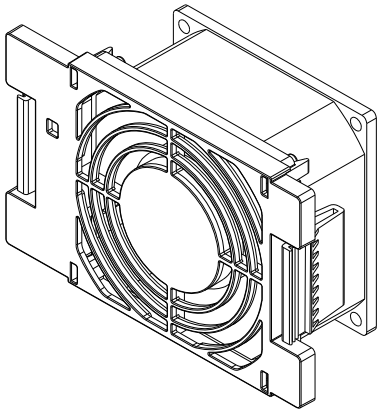
Frame B Applicable Model VFD055C23A-21; VFD075C23A-21; VFD110C23A-21; VFD075C43A-21; VFD110C43A-21; VFD150C43A-21; VFD075C4EA-21; VFD110C4EA-21; VFD150C4EA-21; VFD055C53A-21; VFD075C53A-21; VFD110C53A-21; VFD150C53A-21	Capacitor Fan Model ”MKC-BFKB” 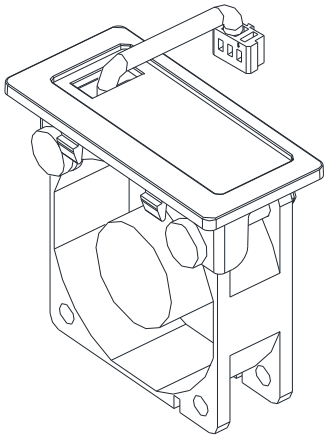

Frame C

Applicable Model

VFD150C23A-21; VFD185C23A-21; VFD220C23A-21

Capacitor Fan Model “MKC-CFKB1”

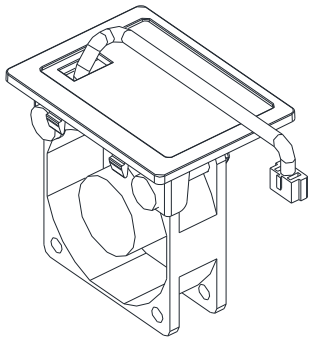

Frame C

Applicable Model

VFD185C43A-21; VFD220C43A-21; VFD300C43A-21;
VFD185C4EA-21; VFD220C4EA-21; VFD300C4EA-21

Capacitor Fan Model “MKC-CFKB2”

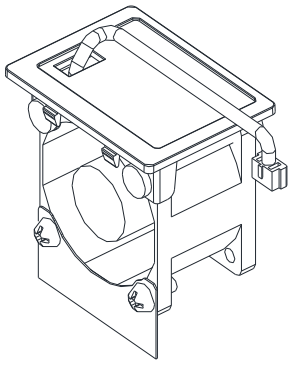

Frame C

- Following Model use one set of MKC-CFKM:

VFD185C43A-21; VFD220C43A-21; VFD300C43A-21;

VFD185C4EA-21; VFD220C4EA-21

- Following Model use two sets of MKC-CFKM:

VFD150C23A-21; VFD185C23A-21; VFD220C23A-21;

VFD300C4EA-21

Heat sink Fan “MKC-CFKM”

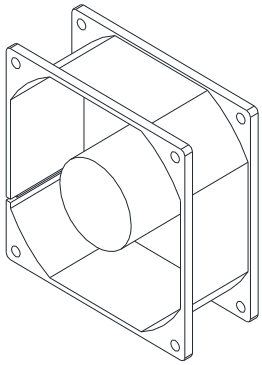

Frame C

Applicable Model

VFD185C63B-21; VFD220C63B-21; VFD300C63B-21;

VFD370C63B-21

Heat sink Fan
“MKC-CFKM1”

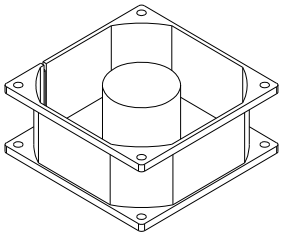

Capacitor Fan
“MKC-CFKB3”

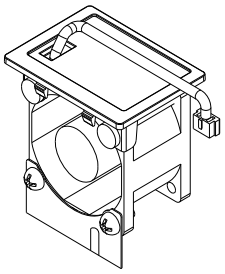

Frame D0

Applicable Model

VFD370C43S-00; VFD450C43S-00; VFD370C43S-21;

VFD450C43S-21

Heat sink Fan Model
“MKC-D0FKM”

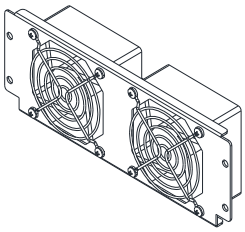

Capacitor Fan Model
”MKC-DFKB”

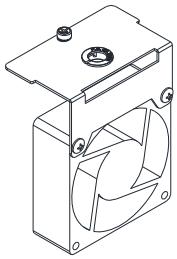

Frame D

Applicable Model

VFD300C23A-00; VFD370C23A-00; VFD300C23A-21; VFD370C23A-21; VFD550C43A-00; VFD750C43A-00; VFD550C43A-21; VFD750C43A-21; VFD450C63B-00; VFD550C63B-00; VFD450C63B-21; VFD550C63B-21

Heat sink Fan Model "MKC-DFKM"

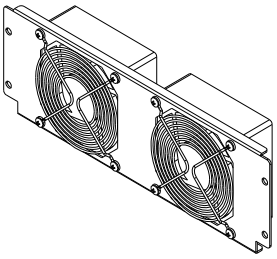

Capacitor Fan Model "MKC-DFKB"

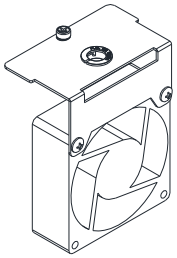

Frame E

Applicable Model

VFD450C23A-00; VFD550C23A-00; VFD450C23A-21; VFD550C23A-21

Heat sink Fan Model "MKC-EFKM1"

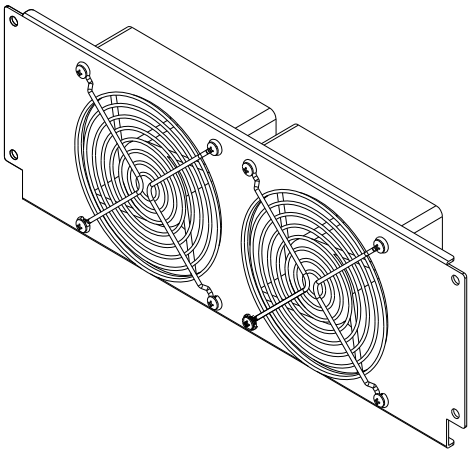

Frame E

Applicable Model

VFD750C23A-00; VFD750C23A-21; VFD900C43A-00; VFD1100C43A-00; VFD900C43A-21; VFD1100C43A-21

Heat sink Fan Model "MKC-EFKM2"

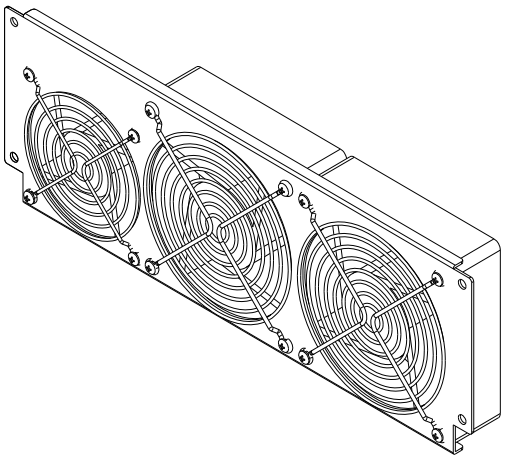

Frame E

Applicable Model

VFD750C63B-00; VFD900C63B-00; VFD1100C63B-00; VFD1320C63B-00; VFD750C63B-21; VFD900C63B-21; VFD1100C63B-21; VFD1320C63B-21

Heat Sink Fan Model "MKC-EFKM3"

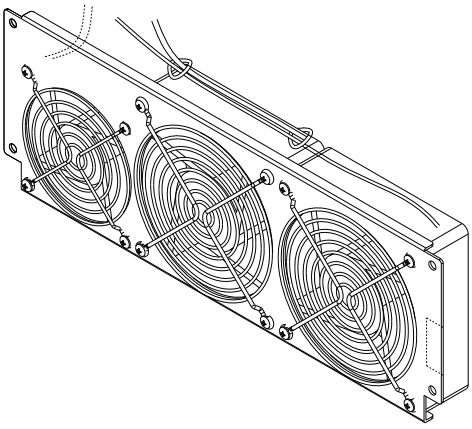

Frame E

Capacitor Fan Model “MKC-EFKB”

Applicable Model

VFD450C23A-00; VFD550C23A-00; VFD750C23A-00; VFD450C23A-21; VFD550C23A-21; VFD750C23A-21; VFD900C43A-00; VFD1100C43A-00; VFD900C43A-21; VFD1100C43A-21; VFD750C63B-00; VFD900C63B-00; VFD1100C63B-00; VFD1320C63B-00; VFD750C63B-21; VFD900C63B-21; VFD1100C63B-21; VFD1320C63B-21

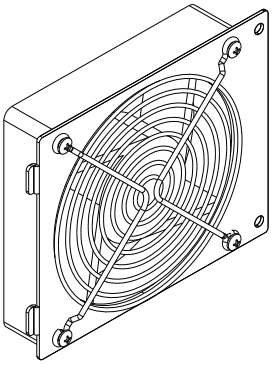

Frame F

Heat sink Fan Model “MKC-FFKM”

Applicable Model

VFD900C23A-00; VFD900C23A-21; VFD1320C43A-00; VFD1600C43A-00; VFD1320C43A-21; VFD1600C43A-21; VFD1600C63B-00; VFD2000C63B-00; VFD1600C63B-21; VFD2000C63B-21

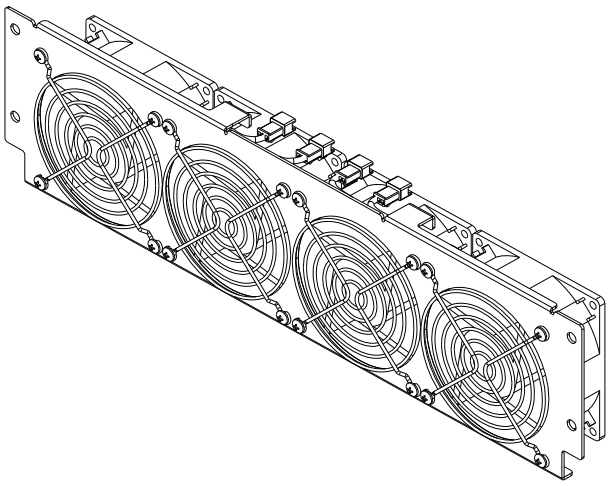

Frame F

Capacitor Fan Model “MKC-FFKB”

Applicable Model

VFD900C23A-00; VFD900C23A-21; VFD1320C43A-00; VFD1600C43A-00; VFD1320C43A-21; VFD1600C43A-21; VFD1600C63B-00; VFD2000C63B-00; VFD1600C63B-21; VFD2000C63B-21

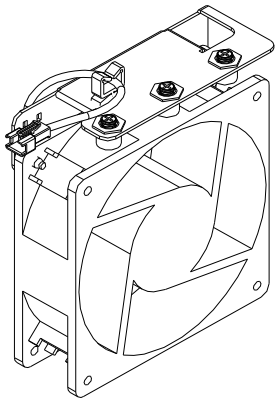

Frame G

Heat sink Fan Model “MKC-GFKM”

Applicable Model

VFD1850C43A-00; VFD2000C43A-00; VFD2200C43A-00; VFD2500C43A-00; VFD1850C43A-21; VFD2000C43A-21; VFD2200C43A-21; VFD2500C43A-21; VFD2500C63B-00; VFD3150C63B-00; VFD2500C63B-21; VFD3150C63B-21

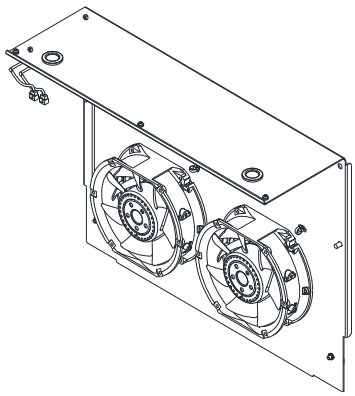

Frame H Applicable Model Following models use 2 sets of MKC-HFKM fan kit. VFD2800C43A-00; VFD3150C43A-00; VFD3550C43A-00; VFD4000C43A-00; VFD2800C43C-21; VFD3150C43C-21; VFD3550C43C-21; VFD4000C43A-21	Heat sink Fan Model “MKC-HFKM” 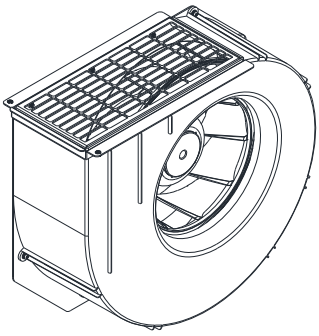
Frame H Applicable Model Following models use 3 sets of MKCHS-HFKM fan kit. VFD4500C43A-00; VFD5000C43A-00; VFD5600C43A-00; VFD4500C43C-21; VFD5000C43C-21; VFD5600C43C-21	Heat sink Fan Model “MKCHS-HFKM” 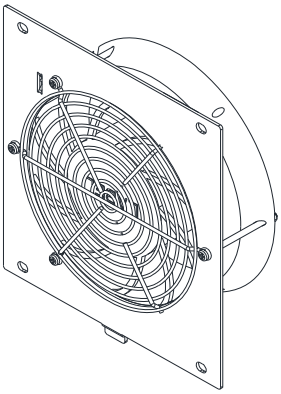
Frame H Applicable Model Following models use two sets of MKC-HFKM1: VFD4000C63B-00; VFD4000C63B-21 Following models use three sets of MKC-HFKM1: VFD4500C63B-00; VFD5600C63B-00; VFD6300C63B-00; VFD4500C63B-21; VFD5600C63B-21; VFD6300C63B-21	Heat sink Fan Model “MKC-HFKM1” 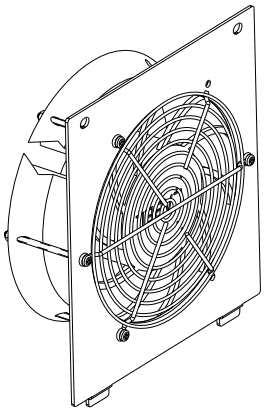

■ Fan Removal

Frame A

Model “MKC-AFKM” : Heat Sink Fan

Applicable model

VFD015C23A-21; VFD022C23A-21; VFD037C23A-21; VFD022C43A-21; VFD037C43A-21; VFD040C43A-21; VFD055C43A-21; VFD022C4EA-21; VFD037C4EA-21; VFD040C4EA-21; VFD055C4EA-21; VFD015C53A-21; VFD037C53A-21

1. Refer to Figure 1, press the tabs on both side of the fan to successfully remove the fan.
2. Disconnect the power terminal before removing the fan. (As shown below.)

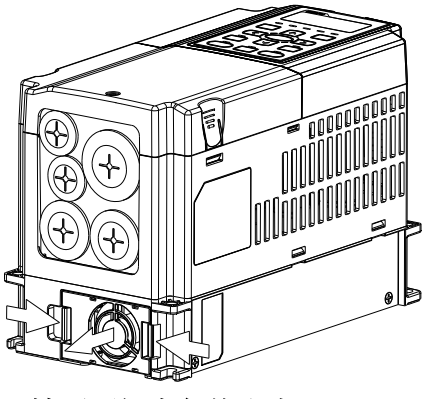

Figure 1

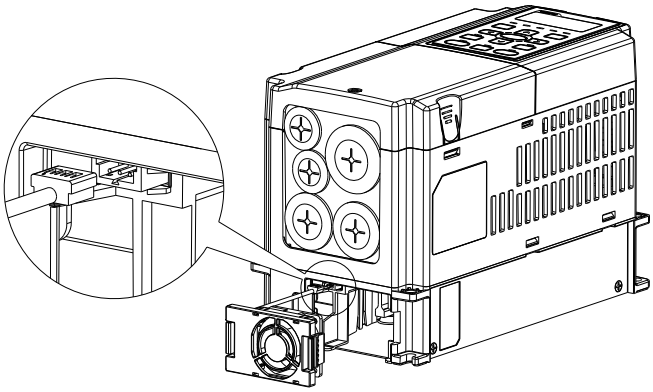

Figure 2

Frame B

Model ”MKC-BFKM1” Heat Sink Fan

Applicable model

VFD055C23A-21; VFD075C43A-21; VFD075C4EA-21; VFD055C53A-21; VFD075C53A-21; VFD110C53A-21; VFD150C53A-21

1. Refer to Figure 1, press the tab on both side of the fan to successfully remove the fan.
2. Disconnect the power terminal before removing the fan. (As shown below.)

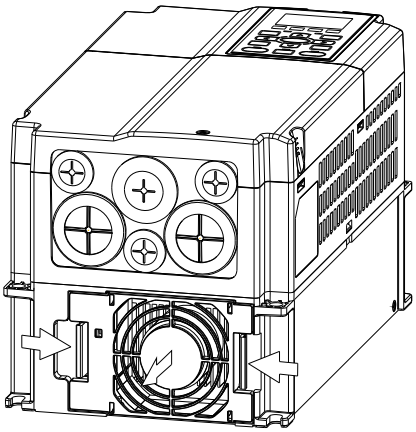

Figure 1

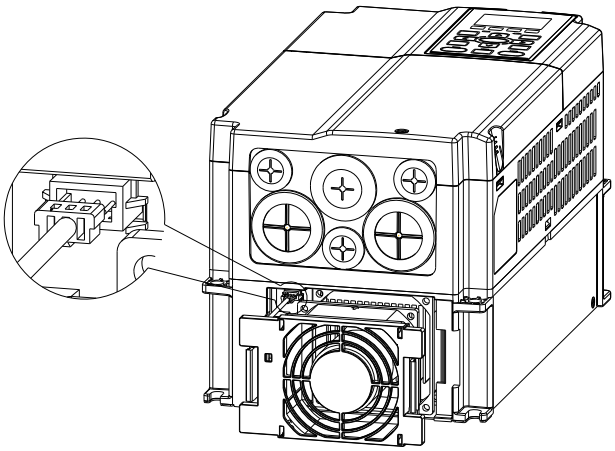

Figure 2

Frame B

Model “MKC-BFKM2” Heat Sink Fan

Applicable model

VFD075C23A-21; VFD110C23A-21; VFD110C43A-21; VFD150C43A-21; VFD110C4EA-21; VFD150C4EA-21

1. Refer to Figure 1, press the tab on both side of the fan to successfully remove the fan.
2. Disconnect the power terminal before removing the fan. (As shown below.)

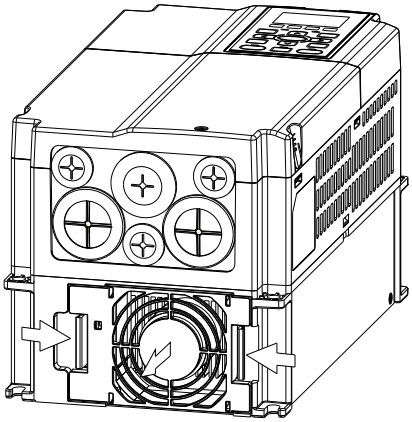

Figure 1

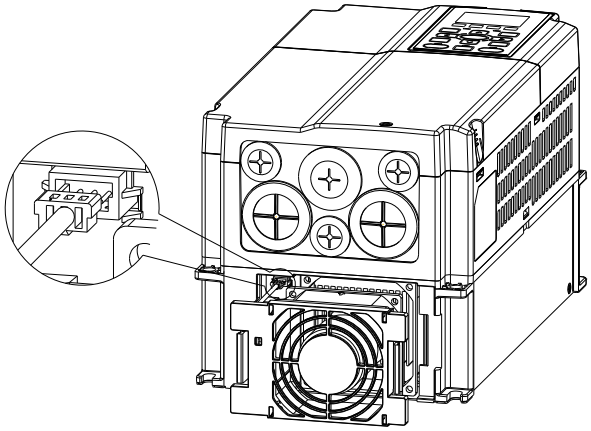

Figure 2

Frame B

Model ”MKC-BFKB” Capacitor Fan

Applicable model

VFD055C23A-21; VFD075C23A-21; VFD110C23A-21; VFD075C43A-21; VFD110C43A-21; VFD150C43A-21; VFD075C4EA-21; VFD110C4EA-21; VFD150C4EA-21; VFD055C53A-21; VFD075C53A-21; VFD110C53A-21; VFD150C53A-21

Disconnect fan power and pull out the fan by using a flat-head screwdriver. (As shown in the larger picture)

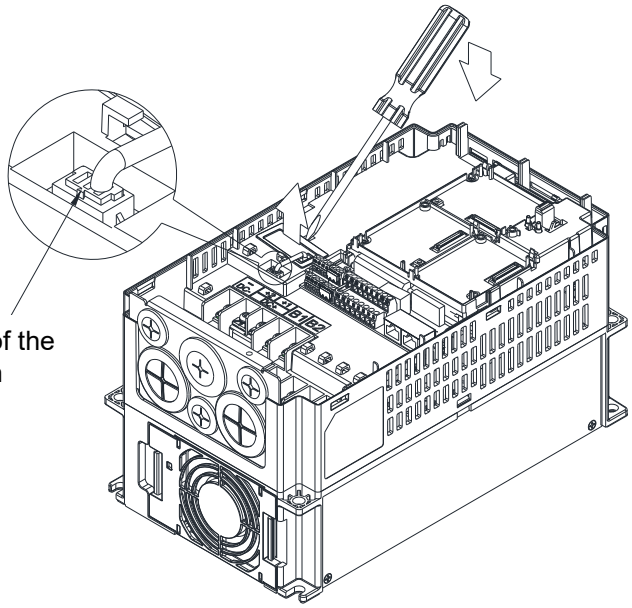

Frame C

Model ”MKC-CFKM / MKC-CFKM1” Heat Sink Fan

Applicable model

- Single fan kit applicable models (only fan kit 1 is required to be installed):

VFD185C43A-21; VFD220C43A-21; VFD300C43A-21; VFD185C4EA-21; VFD220C4EA-21; VFD185C63B-21; VFD220C63B-21; VFD300C63B-21; VFD370C63B-21

- Duo fan kit applicable models (both fan kit 1 and 2 are required to be installed):

VFD150C23A-21; VFD185C23A-21; VFD220C23A-21; VFD300C4EA-21

1. (As shown Figure 1) Before removing the fan, remove the cover by using a slotted screwdriver.

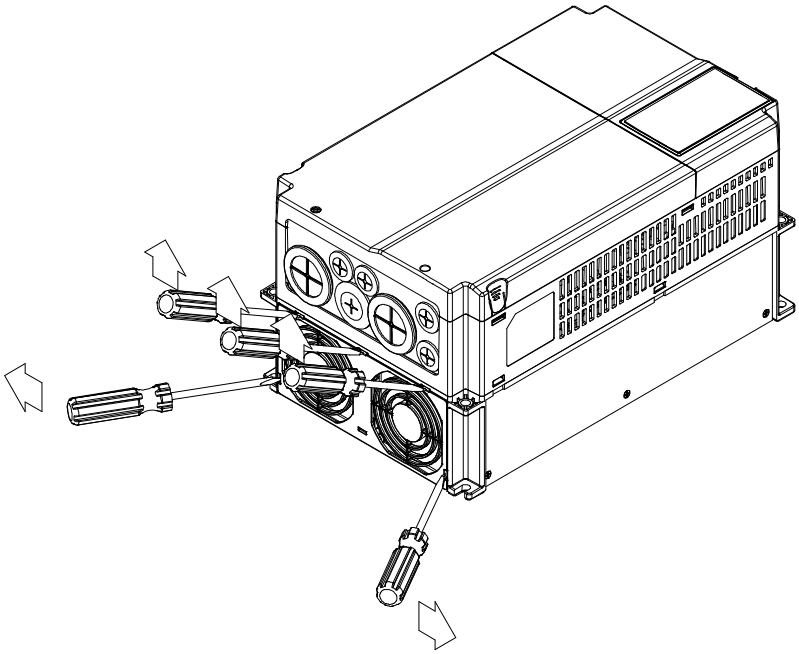

Figure 1

2. (As shown in Figure 2), remove the power connector, loosen the screw and remove the fan kit.
   When installing the fan kit, have the label on the fan kit facing inside of the motor drive.
   Screw’s torque force: 10–12 kg-cm / [8.7–10.4 lb-in.] / [1.0–1.2 Nm]

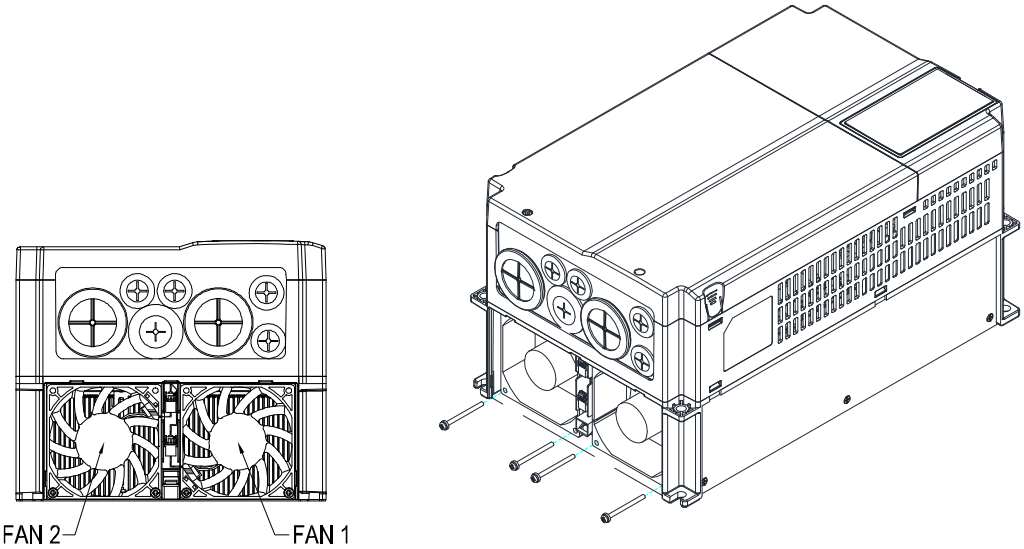

Figure 2

Frame C

Model “MKC-CFKB1” Capacitor Fan

Applicable model

VFD150C23A-21; VFD185C23A-21; VFD220C23A-21

Model “MKC-CFKB2” Capacitor Fan

Applicable model

VFD185C43A-21; VFD220C43A-21; VFD300C43A-21; VFD185C4EA-21; VFD220C4EA-21; VFD300C4EA-21

Model “MKC-CFKB3” Capacitor Fan

Applicable model

VFD185C63B-21; VFD220C63B-21; VFD300C63B-21; VFD370C63B-21

Disconnect fan power and pull out the fan by using a flat-head screwdriver. (As shown in the larger picture)

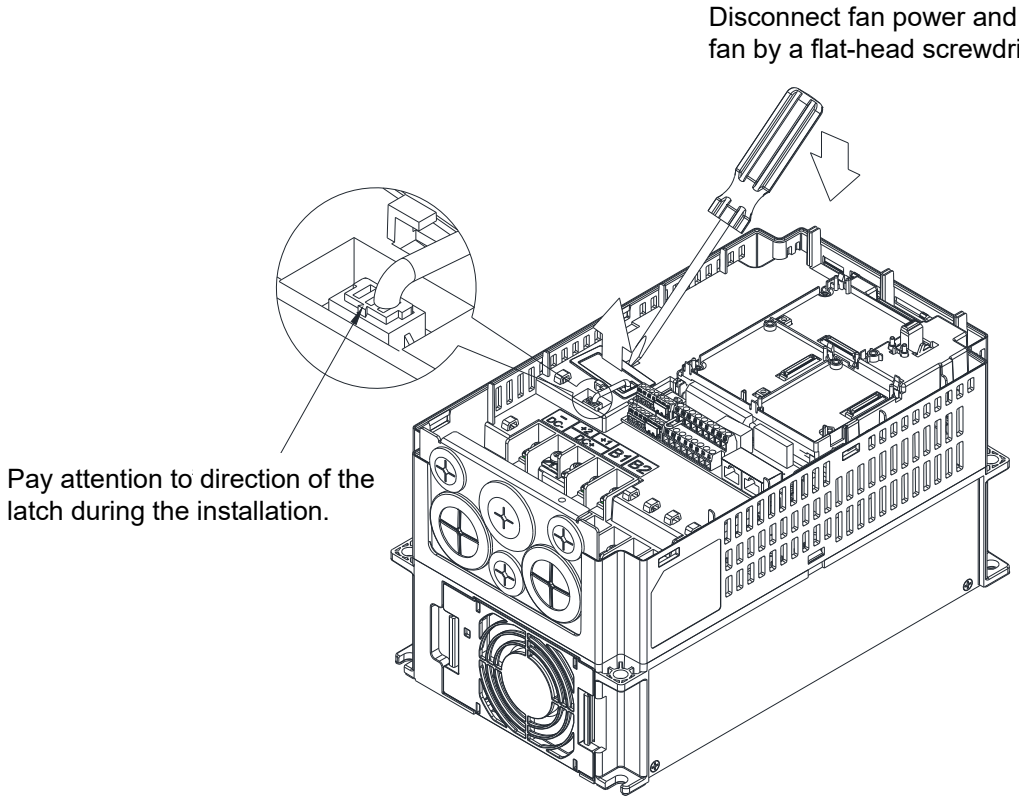

Figure 1

Frame D0

Model “MKC-DFKB” Capacitor Fan

Applicable model

VFD370C43S-00; VFD450C43S-00; VFD370C43S-21; VFD450C43S-21

1. Loosen screw 1 and screw 2, press the tab on the right and left to remove the cover, follow the direction the arrows indicate. Press on top of digital keypad to properly remove it. Screw 1, 2 Torque: 12–15 kg-cm / [10.4–13 lb-in.] / [1.2–1.5 Nm]

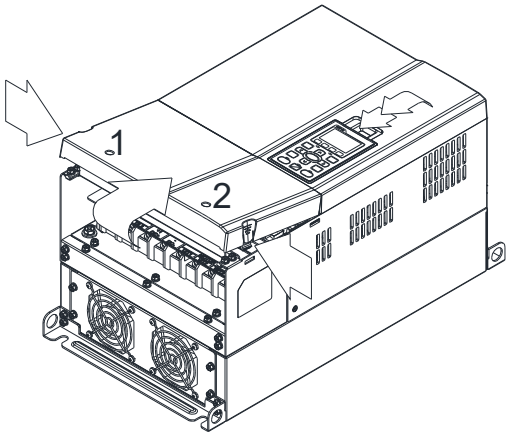

Figure 1

2. (Figure 2) Loosen screw 3, press the tab on the right and the left to remove the cover. Screw 3 Torque: 6–8 kg-cm / [5.2–6.9 lb-in.] / [0.6–0.8 Nm]

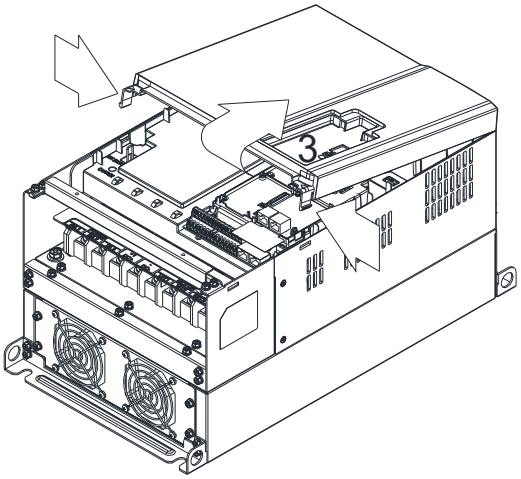

Figure 2

3. Loosen screw 4 (figure 3) and disconnect fan power and pull out the fan. (As shown in the enlarged picture 3) Screw 4 Torque: 10–12 kg-cm / [8.7–10.4 lb-in.] / [1.0–1.2 Nm]

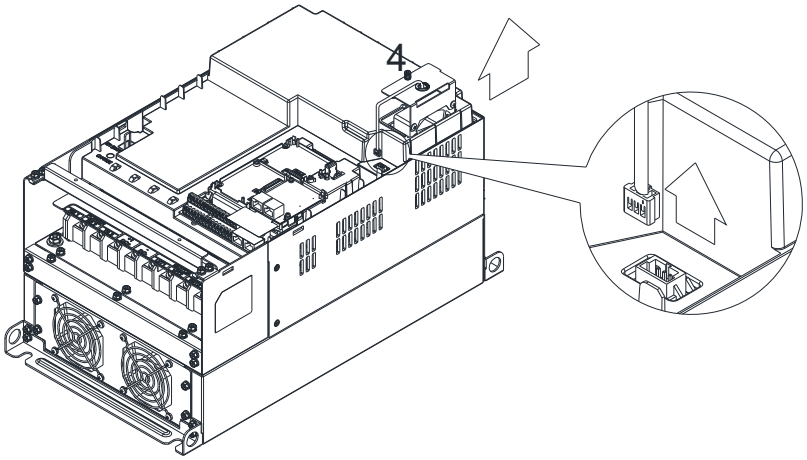

Figure 3

Frame D0

Model “MKC-D0FKM” Heat Sink Fan

Applicable model

VFD370C43S-00; VFD450C43S-00; VFD370C43S-21; VFD450C43S-21

1. Loosen the screw and remove the fan kit. Screw torque: 24–26 kg-cm / [20.8–22.6 lb-in. / [2.4–2.5 Nm]
2. (As shown Figure 1) Before pulling out the fan, make sure the fan power is disconnected.

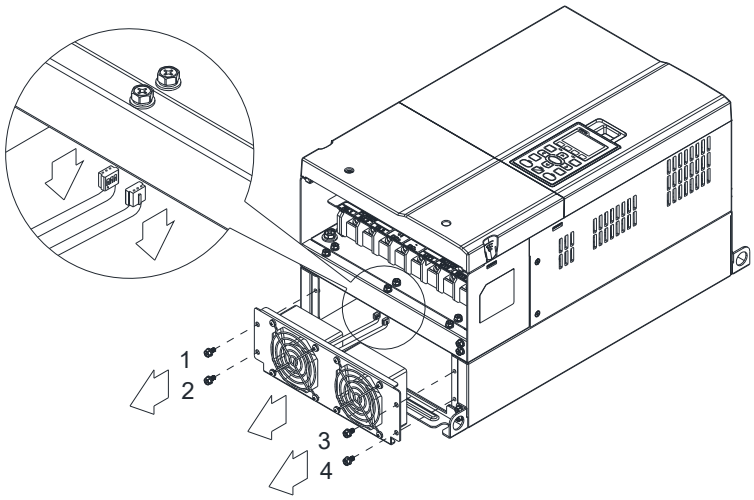

Figure 1

Frame D

Model “MKC-DFKB” Capacitor Fan

Applicable model

VFD300C23A-00; VFD370C23A-00; VFD300C23A-21; VFD370C23A-21; VFD550C43A-00; VFD750C43A-00; VFD550C43A-21; VFD750C43A-21; VFD450C63B-00; VFD550C63B-00; VFD450C63B-21; VFD550C63B-21

1. (Figure 1) Loosen screw 1 and screw 2, press the tab on the right and the left to remove the cover, follow the direction the arrows indicate in the following figure. Press on the top of digital keypad to properly remove it.
   Screw 1, 2 Torque: 12–15 kg-cm / [10.4–13 lb-in.] / [1.2–1.5 Nm]
2. (Figure 2) Loosen screw 3 & 4, press the tab on the right and the left to remove the cover.
   Screw 3, 4 Torque: 6–8 kg-cm / [5.2–6.9 lb-in.] / [0.6–0.8 Nm]

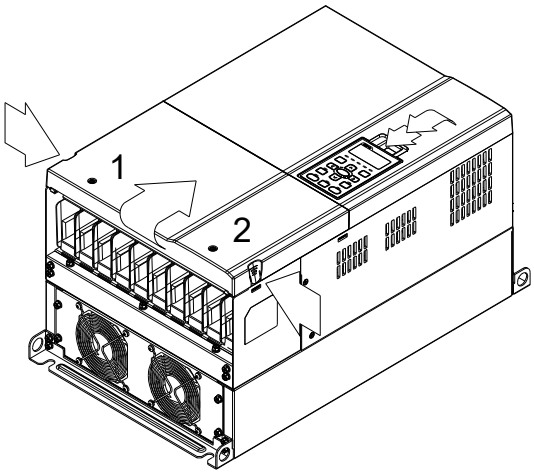

Figure 1

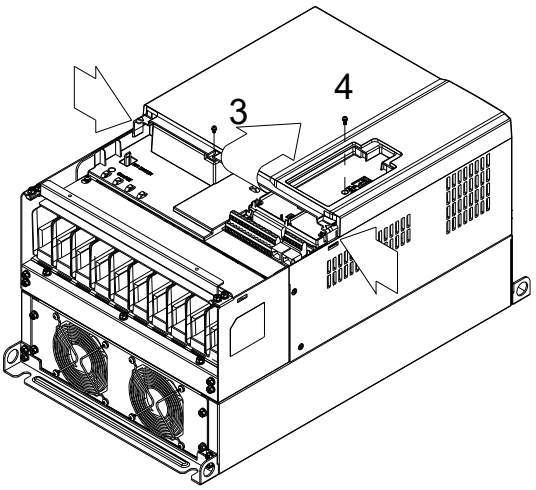

Figure 2

3. Loosen screw 5 (figure 3) and disconnect fan power and pull out the fan. (As shown in the enlarged picture 3)
   Screw 5 Torque: 10–12 kg-cm / [8.6–10.4 lb-in.] / [1.0–1.2 Nm]

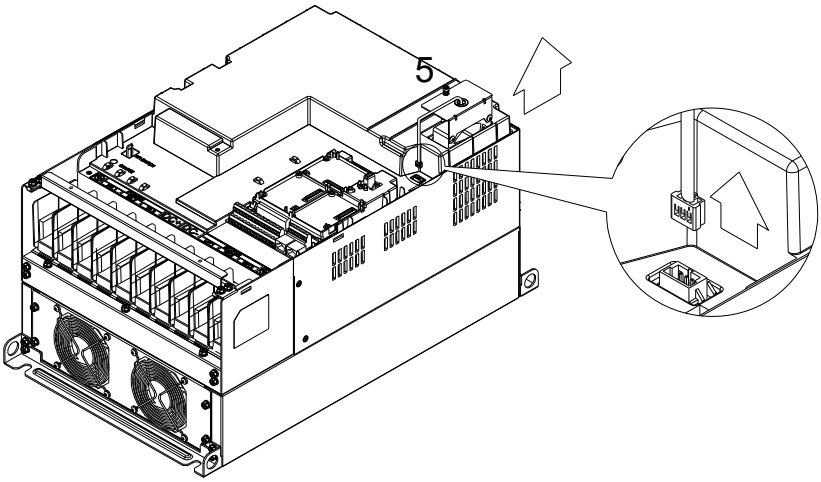

Figure 3

Frame D

Model “MKC-DFKM” Heat Sink Fan

Applicable model

VFD300C23A-00; VFD370C23A-00; VFD300C23A-21; VFD370C23A-21; VFD550C43A-00; VFD750C43A-00; VFD550C43A-21; VFD750C43A-21; VFD450C63B-00; VFD550C63B-00; VFD450C63B-21; VFD550C63B-21

1. Loosen the screw and remove the fan kit. Screw torque: 24–26 kg-cm / [20.8–22.6 lb-in.] / [2.4–2.5 Nm]
2. (As shown Figure 1) Before removing the fan, remove the cover by using a slotted screwdriver.

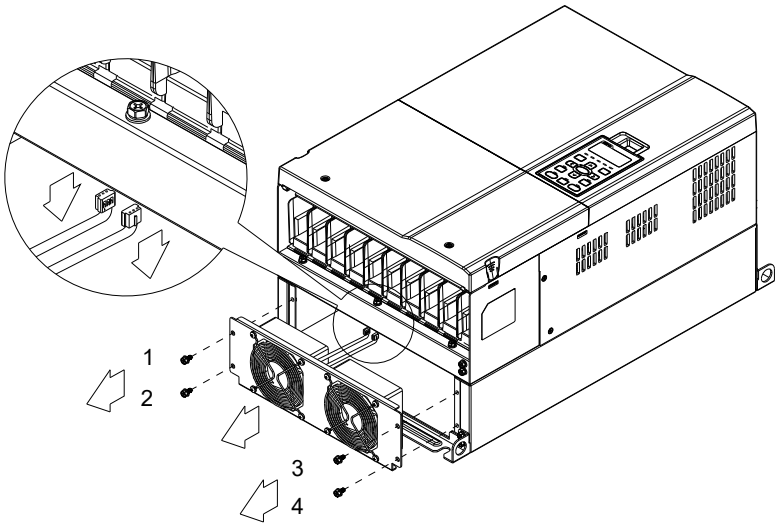

Figure 1

Frame E

Applicable model

Applicable for MKC-EFKM1: VFD450C23A-00; VFD550C23A-00; VFD450C23A-21; VFD550C23A-21

Applicable for MKC-EFKM2: VFD750C23A-00; VFD750C23A-21; VFD900C43A-00; VFD1100C43A-00; VFD900C43A-21; VFD1100C43A-21

Applicable for MKC-EFKM3: VFD750C63B-00; VFD900C63B-00; VFD1100C63B-00; VFD1320C63B-00; VFD750C63B-21; VFD900C63B-21; VFD1100C63B-21; VFD1320C63B-21

Applicable for MKC-EFKB: VFD450C23A-00; VFD550C23A-00; VFD750C23A-00; VFD450C23A-21; VFD550C23A-21; VFD750C23A-21; VFD900C43A-00; VFD1100C43A-00; VFD900C43A-21; VFD1100C43A-21; VFD750C63B-00; VFD900C63B-00; VFD1100C63B-00; VFD1320C63B-00; VFD750C63B-21; VFD900C63B-21; VFD1100C63B-21; VFD1320C63B-21

Model “MKC-EFKM1” Heat Sink Fan

1. Loosen screw 1–4 (figure 1) and disconnect fan power and pull out the fan. (As shown in the enlarged picture 3) Screw 1–4 Torque: 24–26 kg-cm / [20.8–22.6 lb-in.] / [2.4–2.5 Nm]

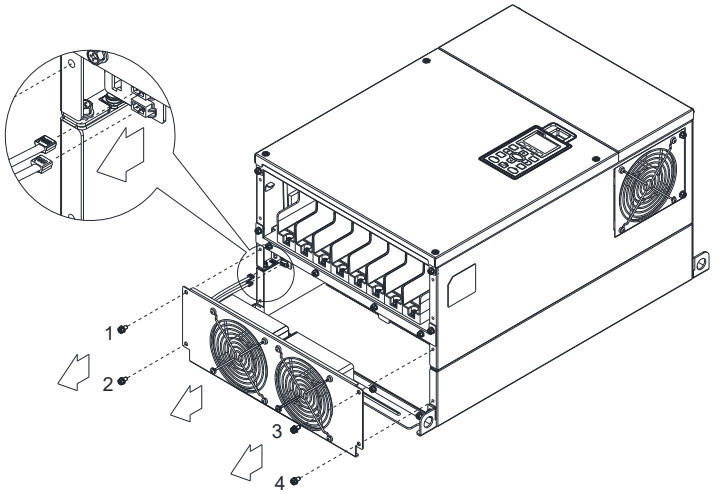

Figure 1

Model “MKC-EFKM2” / “MKC-EFKM3” Heat Sink Fan

1. Loosen screw 1–4 (figure 2) and disconnect fan power and pull out the fan. (As shown in the enlarged picture 3) Screw 1–4 Torque: 24–26 kg-cm / [20.8–22.6 lb-in.] / [2.4–2.5 Nm]

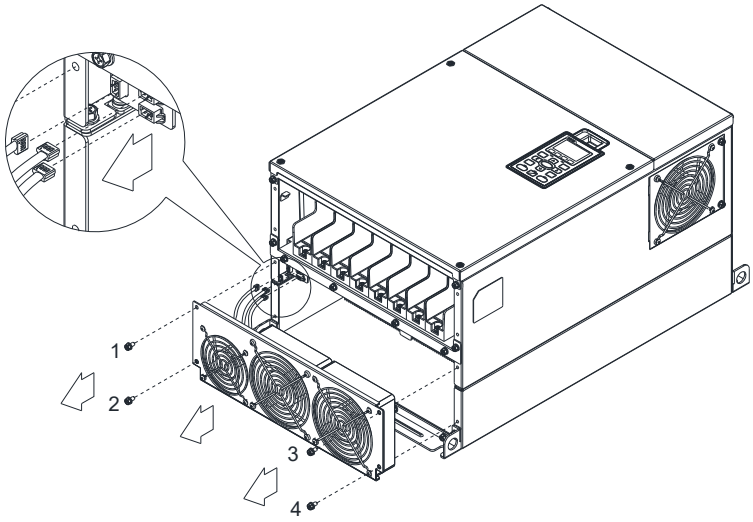

Figure 2

Model “MKC-EFKB” Capacitor Fan

1. Loosen screw 1–2 (figure 3) and disconnect fan power and pull out the fan. (As shown in the enlarged picture 3) Screw 1–2 Torque: 24–26 kg-cm / [20.8–22.6 lb-in.] / [2.4–2.5 Nm]

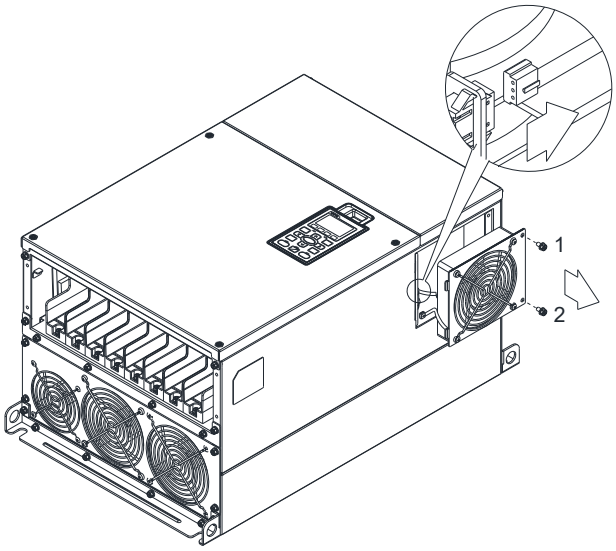

Figure 3

Frame F

Applicable model

VFD900C23A-00; VFD900C23A-21; VFD1320C43A-00; VFD1600C43A-00; VFD1320C43A-21; VFD1600C43A-21; VFD1600C63B-00; VFD2000C63B-00; VFD1600C63B-21; VFD2000C63B-21

Fan model “MKC-FFKM” Heat Sink Fan

Loosen the screws and plug out the power of fan before removing (figure 1).
Screw torque: 24–26 kg-cm / [20.8–22.6 lb-in.] / [2.4–2.5 Nm]

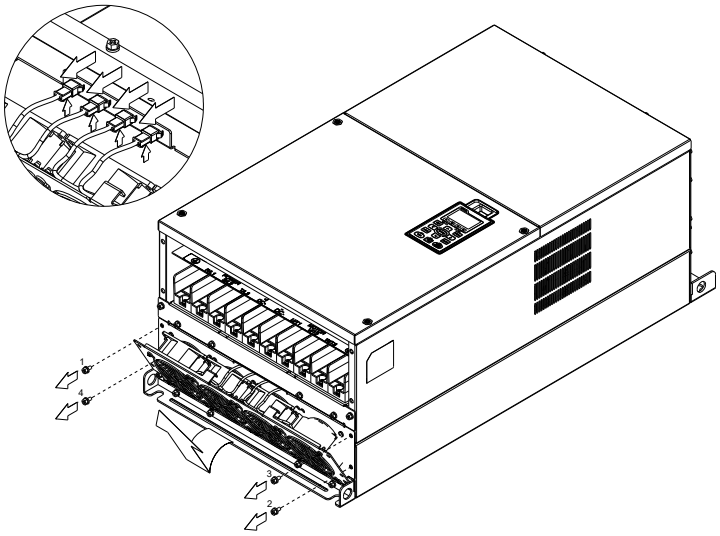

Figure 1

Fan model “MKC-FFKB” Capacitor Fan

1. Loosen the screw (figure 1) and remove the cover.
   Screw torque: 12–15 kg-cm / [10.4–13 lb-in.] / [1.2–1.5 Nm]

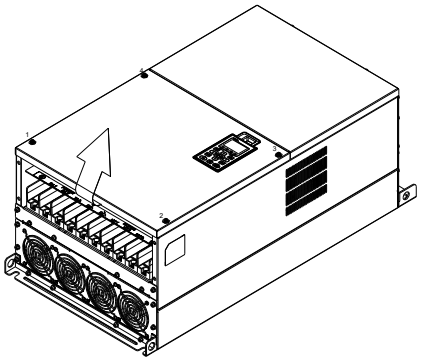

Figure 1

2. Loosen the screw (figure 2) and remove the cover.
   Screw torque: 24–26 kg-cm / [20.8–22.6 lb-in.] / [2.4–2.5 Nm]

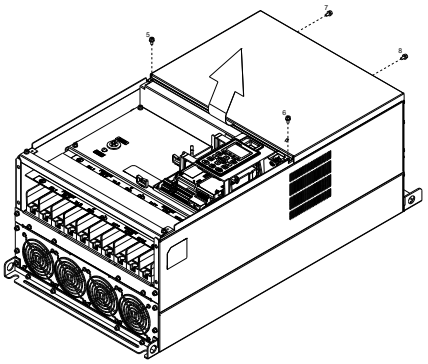

Figure 2

3. Loosen the screws and remove the fan. (figure 3 and figure 4)
   Screw torque: 12–15 kg-cm / [10.4–13.0 lb-in.] / [1.2–1.5 Nm]

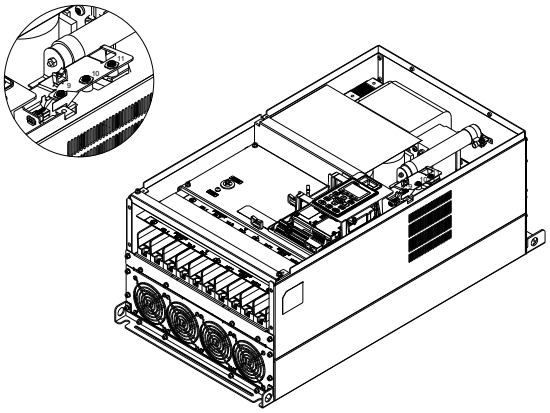

Figure 3

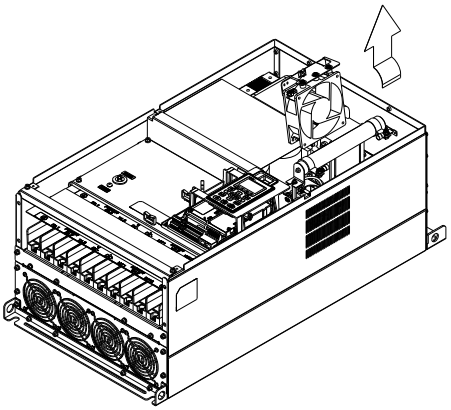

Figure 4

Frame G

Applicable model

VFD1850C43A-00; VFD2000C43A-00; VFD2200C43A-00; VFD2500C43A-00; VFD1850C43A-21; VFD2000C43A-21; VFD2200C43A-21; VFD2500C43A-21; VFD2500C63B-00; VFD3150C63B-00; VFD2500C63B-21; VFD3150C63B-21

Fan model “MKC-GFKM” Heat Sink Fan

1. Loosen the screw (figure 1) and remove the cover.
   Screw torque: 12–15 kg-cm / [10.4–13.1 lb-in.] / [1.2–1.5 Nm]

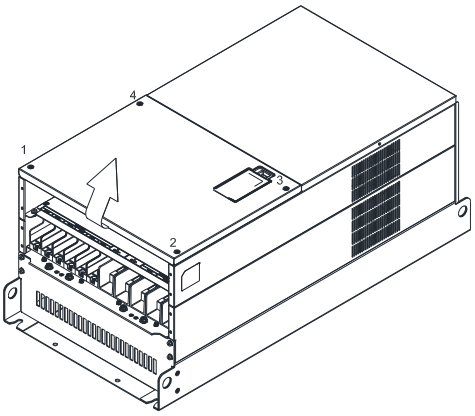

Figure 1

2. For 1–8 shown in the figure 2: Loosen the screws
   Screw M6 torque: 35–40 kg-cm / [30.4–34.7 lb-in.] / [3.4–3.9 Nm]
3. For 9–11 shown in the figure 2: Loosen the screws and remove the cover. Screw M4 torque: 14–16 kg-cm / [12.2–13.9 lb-in.] / [1.4–1.6 Nm]

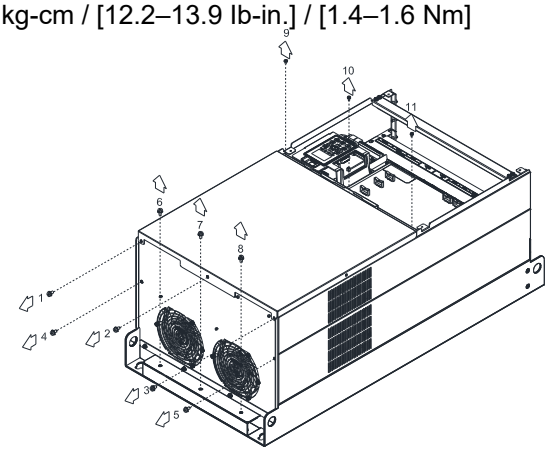

Figure 2

4. Loosen screw 1–3 and remove the protective ring (as shown in figure 3) Screw torque: 14–16 kg-cm / [12.2–13.9 lb-in.] / [1.4–1.6 Nm]

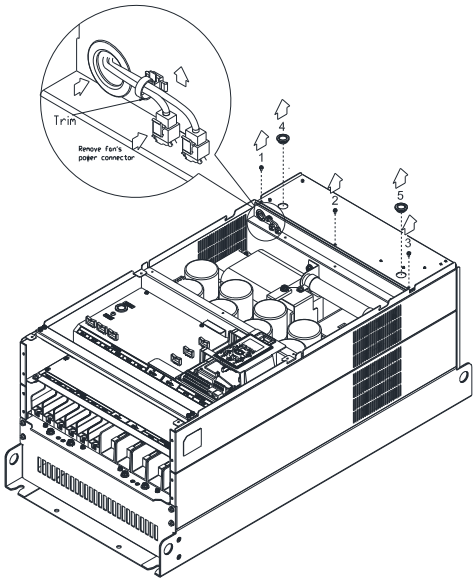

Figure 3

5. Lift the fan by putting your finger through the protective holes, as indicates in 1 and 2 on the figure 4.

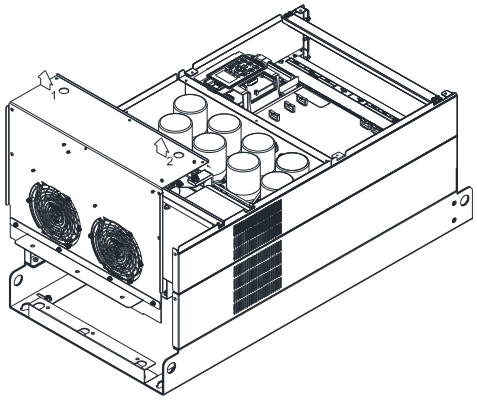

Figure 4

6. For old drives switching new fans, follow below steps:
   Loosen screws 1–5, remove the cover (as below figure shown) Screw M4 torque: 14–16 kg-cm / [12.2–13.9 lb-in] / [1.4–1.6 Nm]

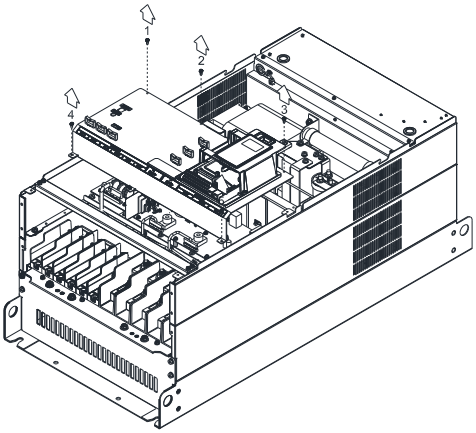

Figure 5

7. Add cable model 3864483201 to connect the power board and fan connector. (The cable 3864483201 goes with the fan as accessory)

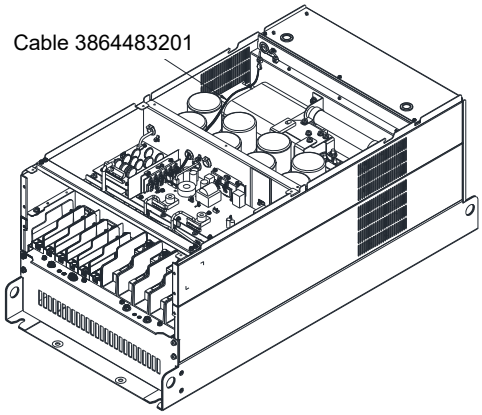

Figure 6

Frame H

Applicable model

VFD2800C43A-00; VFD3150C43A-00; VFD3550C43A-00; VFD2800C43C-21; VFD3150C43C-21; VFD3550C43C-21

Fan model “MKC-HFKM” Heat Sink Fan

1. Loosen the screw 1–4 and remove the top cover (figure 1)
   Screw torque: 14–16 kg-cm / [12.2–13.9 lb-in.] / [1.4–1.6 Nm]

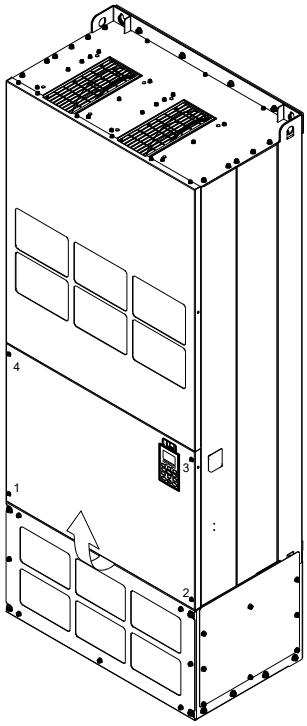

Figure 1

2. Loosen the screw 5–12 and remove the top cover (figure 2).
   Screw torque: 24–26 kg-cm / [20.8–22.6 lb-in.] / [2.4–2.5 Nm]

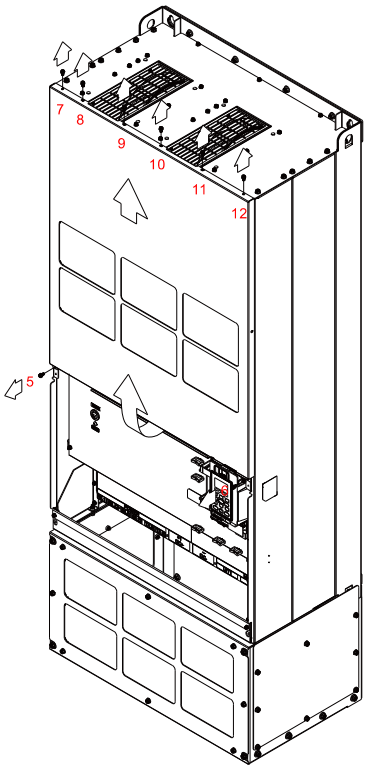

Figure 2

3. Press the latch to disconnect fan power (figure 3).

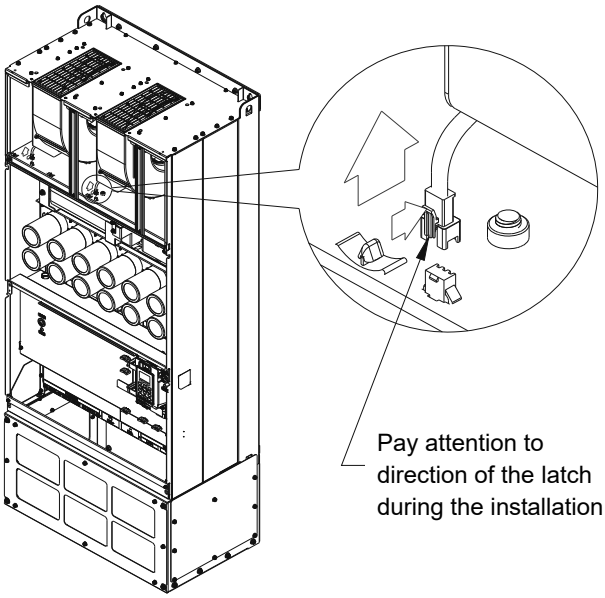

Figure 3

4. Loosen the screw 13–18 and remove the fan.
   Screw torque: 24–26 kg-cm / [20.8–22.6 lb-in.] / [2.4–2.5 Nm] (figure 4)

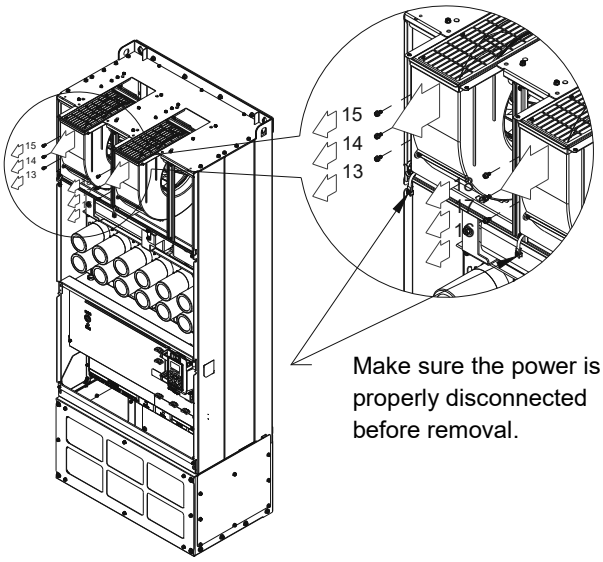

Figure 4

Frame H

Applicable model

VFD4500C43A-00; VFD5000C43A-00; VFD5600C43A-00; VFD4500C43C-21; VFD5000C43C-21; VFD5600C43C-21

Fan model “MKCHS-HFKM” Heat Sink Fan

1. Loosen the screw 1–4 and remove the top cover 2. (figure 1). Screw torque: 14–16 kg-cm / [12.2–13.9 Ib-in.] / [1.4–1.6 Nm]

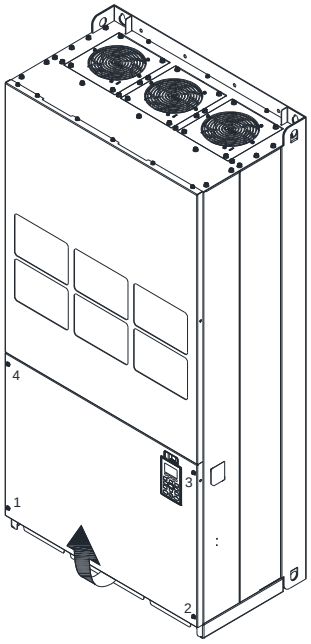

Figure 1

Loosen the screw 5–12 and remove the top cover (figure 2). Screw torque: 24–26kg-cm / [20.8–22.6 Ib-in.] / [2.4–2.5 Nm]

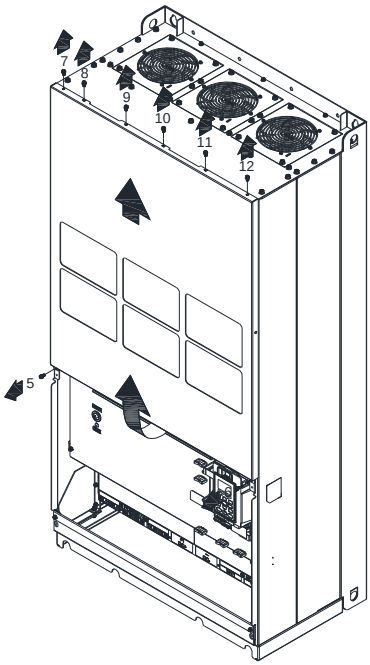

Figure 2

3. Press the latch to disconnect fan power, and cut the cable tie.

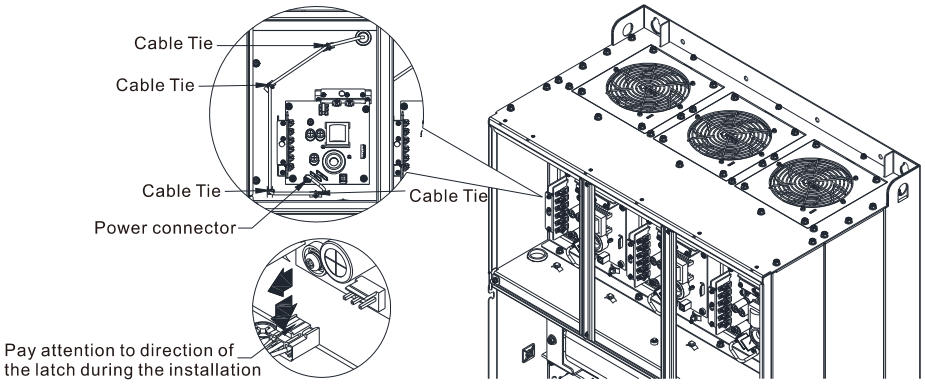

Figure 3

4. Two sets of fans: Loosen the screw 13–16 / 21–24 and remove the fan A and C.
   Three sets of fans: Loosen the screw 13–24 and remove the fan A, B, and C.
   Screw torque: 35–45 kg-cm / [30.4–39.1 Ib-in.] / [3.4–4.4 Nm]

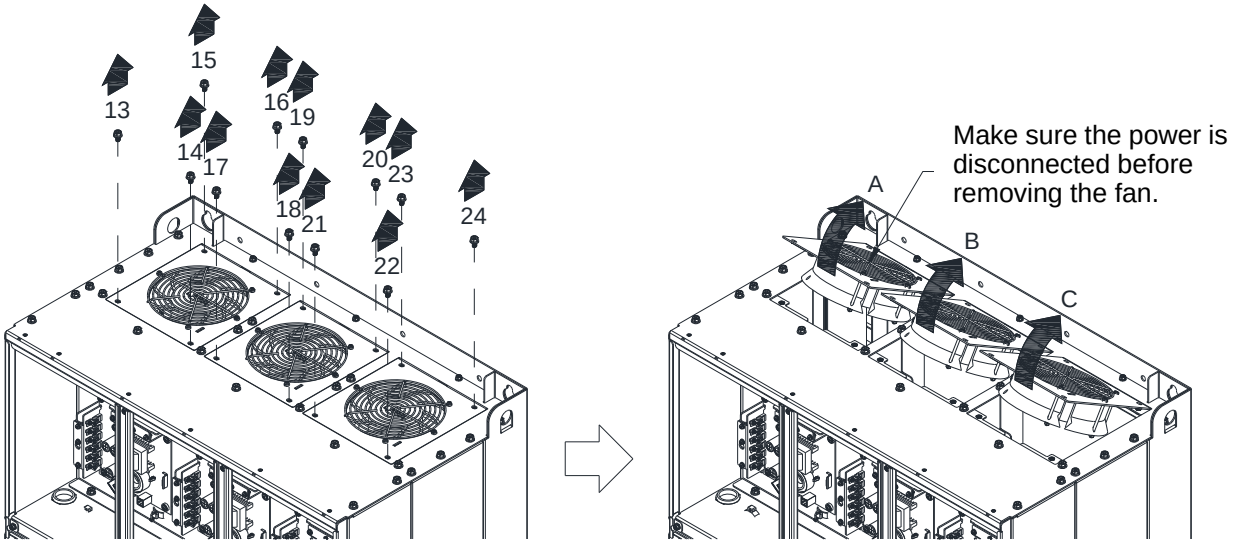

Figure 4

Frame H

Applicable model

VFD4000C63B-00; VFD4000C63B-21

Fan model “MKC-HFKM1” Heat Sink Fan, Two sets

1. Loosen the screw 1–4 and remove the top cover (figure 1)
   Screw torque: 14–16 kg-cm / [12.2–13.9 Ib-in.] / [1.4–1.6 Nm]

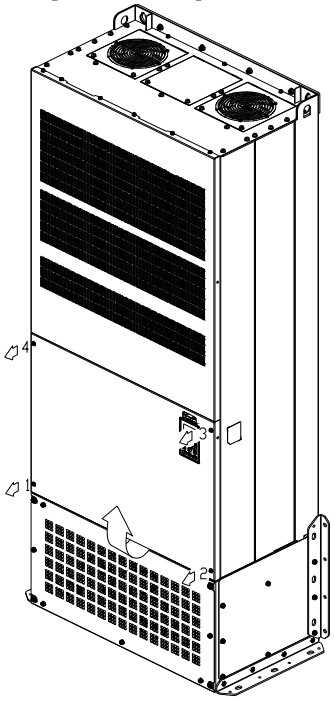

Figure 1

2. Loosen the screw 1–8 and remove the top cover (figure 2).
   Screw torque: 24–26kg-cm / [20.8–22.6 Ib-in.] / [2.4–2.5 Nm]

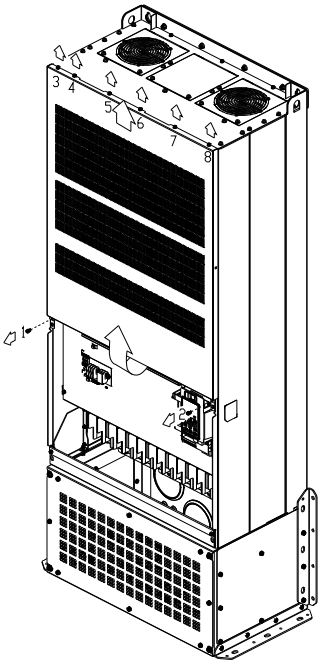

Figure 2

3. Disconnect the fan connector (figure 3).

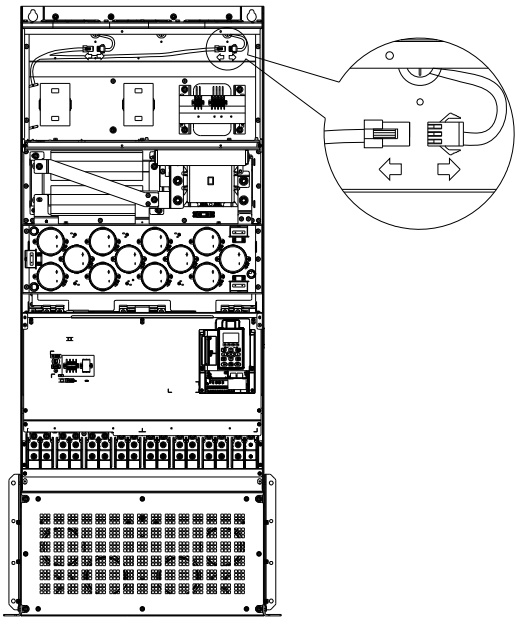

Figure 3

4. Loosen screws 1–4 (as shown below) and remove the fan. Make sure the fan is disconnected when removing. Screw torque: 24–26 kg-cm / [20.8–22.6 Ib-in.] / [2.4–2.5 Nm] (figure 4)

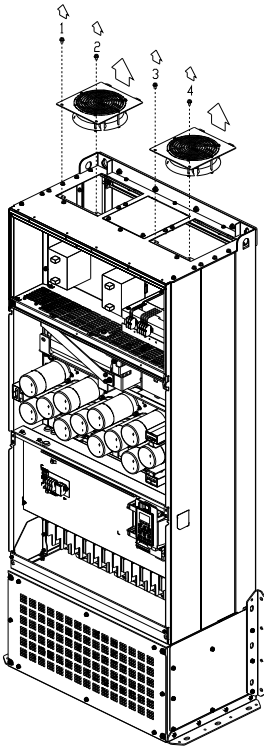

Figure 4

Frame H

Applicable model

VFD4500C63B-00; VFD5600C63B-00; VFD6300C63B-00; VFD4500C63B-21; VFD5600C63B-21; VFD6300C63B-21

Fan model “MKC-HFKM1” Heat Sink Fan, Three sets

1. Loosen the screw 1–4 and remove the top cover (figure 1)
   Screw torque: 14–16 kg-cm / [12.2–13.9 Ib-in.] / [1.4–1.6 Nm]

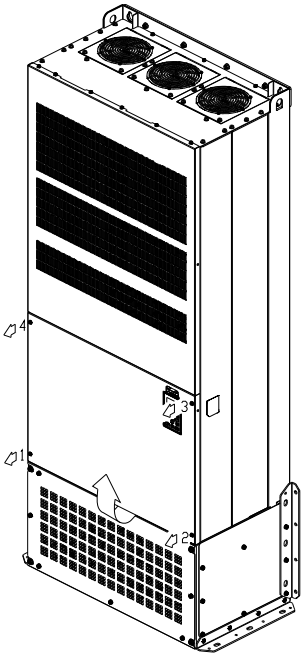

Figure 1

2. Loosen the screw 1–8 and remove the top cover (figure 2).
   Screw torque: 24–26kg-cm / [20.8–22.6 Ib-in.] / [2.4–2.5 Nm]

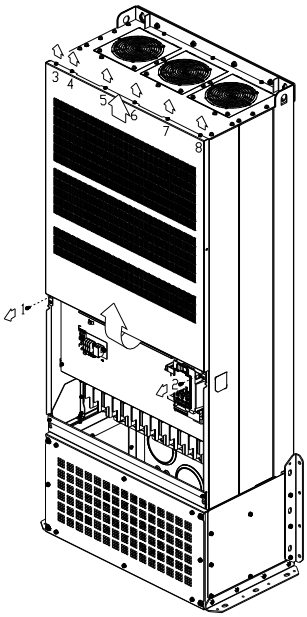

Figure 2

3. Disconnect the fan connector (figure 3).

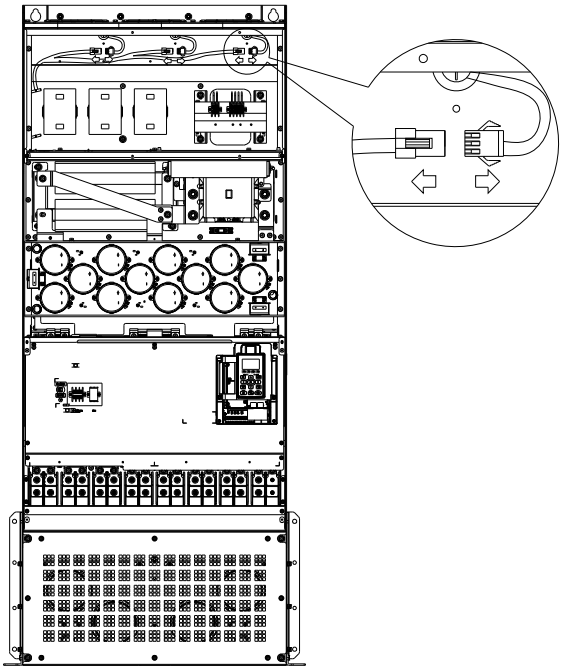

Figure 3

4. Loosen screws 1–6 (as shown below) and remove the fan. Make sure the fan is disconnected when removing. Screw torque: 24–26 kg-cm / [20.8–22.6 lb-in.] / [2.4–2.5 Nm] (figure 4)

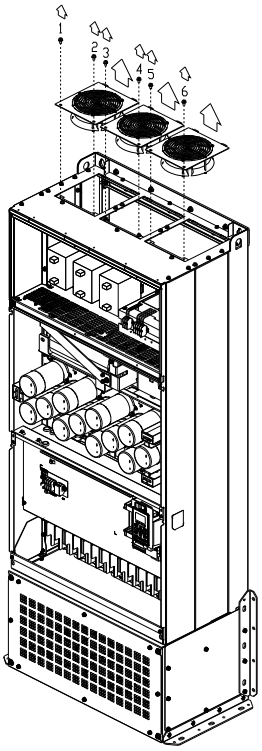

Figure 4

7-10 Flange Mounting Kit

Applicable Models, Frame A~F
Frame A

『MKC-AFM1』

Applicable model

VFD015C23A-21; VFD015C53A-21; VFD022C23A-21; VFD022C43A-21; VFD022C4EA-21; VFD022C53A-21; VFD037C53A-21

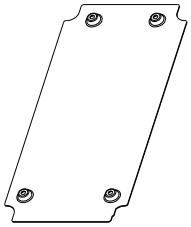

Accessory 1*1

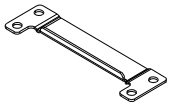

Accessory 2*2

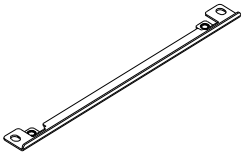

Accessory 3*2

Screw 1*4
M3*P 0.5
L= 6 mm

Screw 2*8
M6*P 1.0
L=16 mm

『MKC-AFM』

Applicable model

VFD007C23A-21; VFD007C43A-21; VFD007C4EA-21; VFD015C43A-21; VFD015C4EA-21; VFD037C23A-21; VFD037C43A-21; VFD037C4EA-21; VFD040C43A-21; VFD040C4EA-21; VFD055C43A-21; VFD055C4EA-21

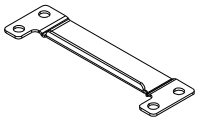

Accessory 2*2

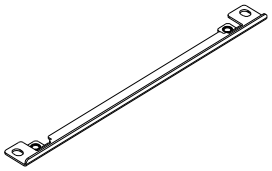

Accessory 3*2

Screw 1*8
M6*P 1.0
L= 16 mm

Cutout dimension

Unit: mm [inch]

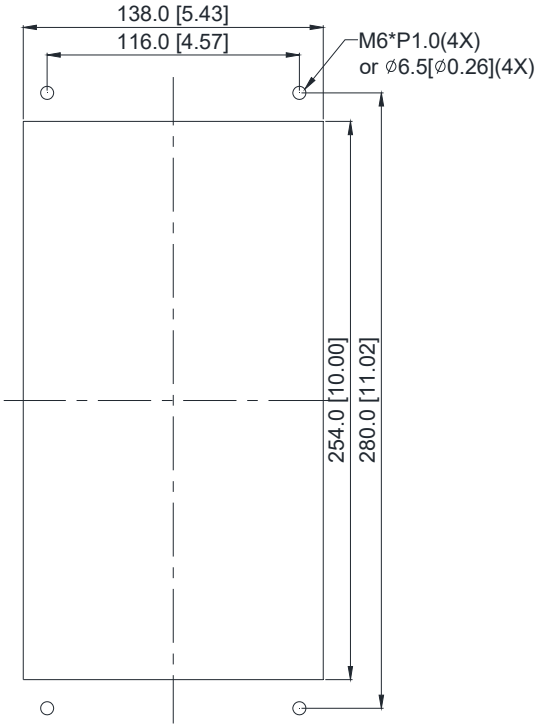

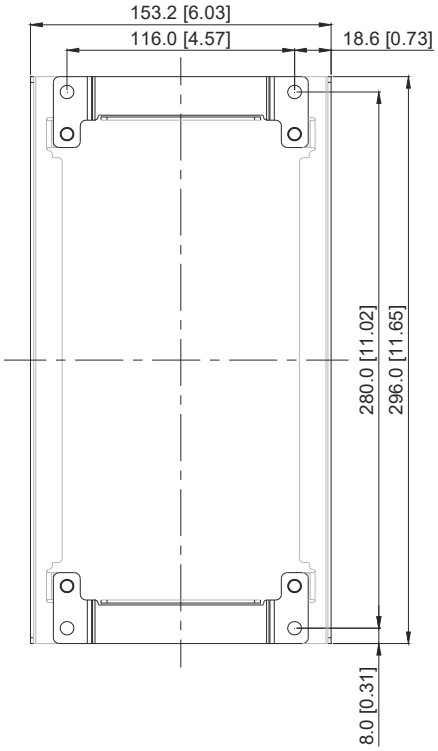

『MKC-AFM1』Installation

1. Install accessory 1 by fastening 4 of the screw 1 (M3) (figure 1). Screw torque: 6~8 kg-cm / [5.21~6.94 lb-in.] / [0.6~0.8 Nm]

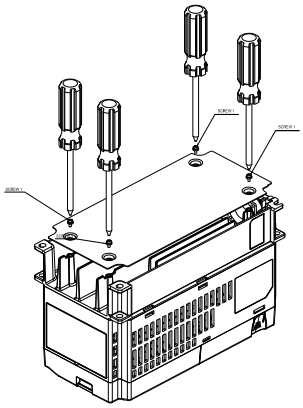

Figure 1

2. Install accessory 2&3 by fastening 2 of the screw 2 (M6) (figure 2). Screw torque: 25~30 kg-cm / [21.7~26 lb-in.] / [2.5~2.9 Nm]

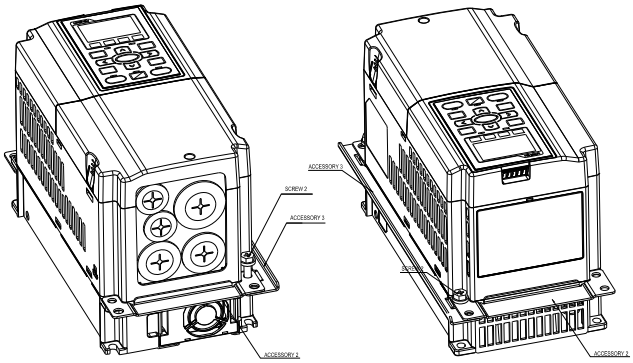

Figure 2

3. Install accessory 2 & 3 by fastening 2 of the screw 2 (M6) (figure 3). Screw torque: 25~30 kg-cm / [21.7~26 lb-in.] / [2.5~2.9 Nm]

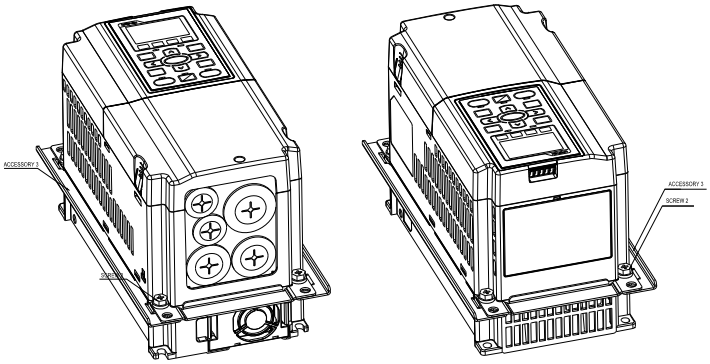

Figure 3

4. Plate installation, place 4 of the screw 2 (M6) (figure 4) through accessory 2 & 3 and the plate then fasten the screws. Screw torque: 25~30 kg-cm / [21.7~26 lb-in.] / [2.5~2.9 Nm]

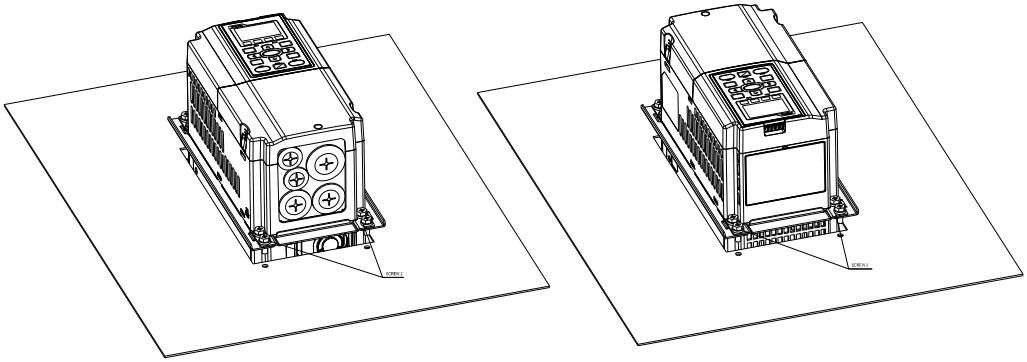

Figure 4

『MKC-AFM』 Installation

1. Fasten screw*2 (M6) and accessory 2 & 3. Screw torque: 25~30 kg-cm / [21.7~26 lb-in.] / [2.5~2.9 Nm] (figure 1)

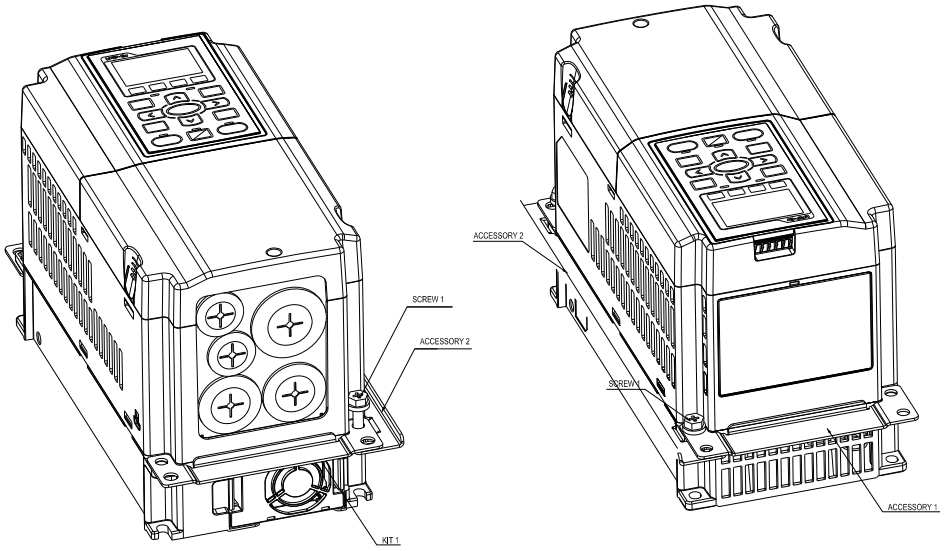

Figure 1

2. Fasten screw*2 (M6) and accessory 2 & 3. Screw torque: 25~30 kg-cm / [21.7~26 lb-in.] / [2.5~2.9 Nm] (figure 2)

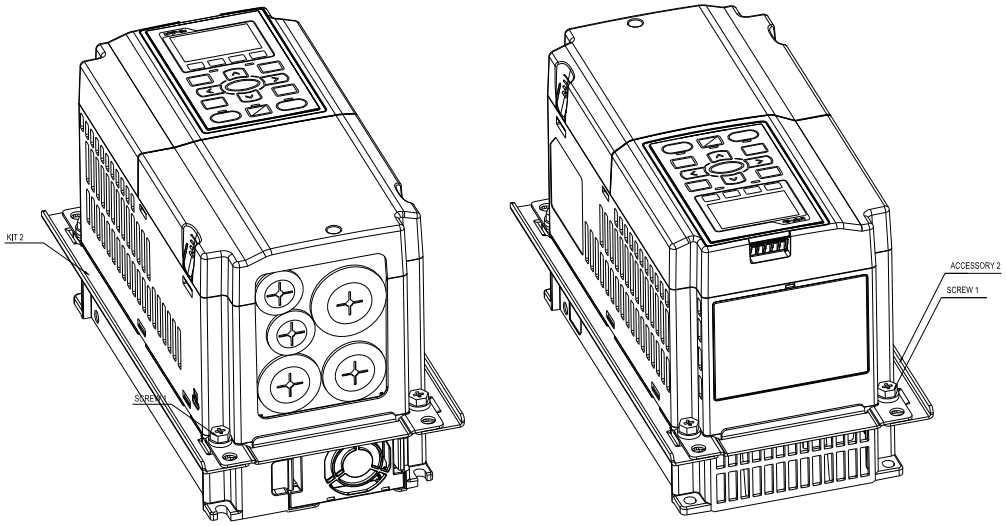

Figure 2

3. Plate installation, place 4 of the screw *4 (M6) through accessory 2 & 3 and the plate then fasten the screws. Screw torque: 25~30 kg-cm / [21.7~26 lb-in.] / [2.5~2.9 Nm] (figure 3)

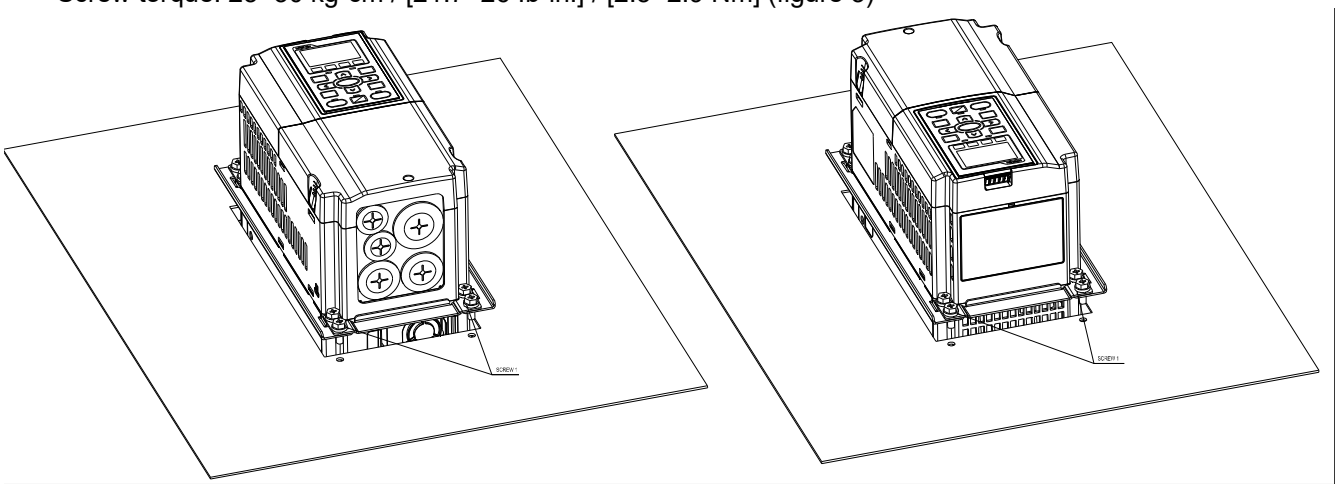

Figure 3

Frame B

『MKC-BFM』

Applicable model

VFD055C23A-21; VFD055C53A-21; VFD075C23A-21; VFD075C43A-21; VFD075C4EA-21; VFD075C53A-21; VFD110C23A-21; VFD110C43A-21; VFD110C4EA-21; VFD110C53A-21; VFD150C43A-21; VFD150C4EA-21; VFD150C53A-21

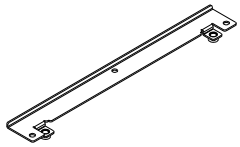

Accessory 1*2

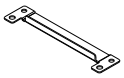

Accessory 2*2

螺絲 1*4
M8*P 1.25

螺絲 2*6
M6*P 1.0

Cutout dimension

Unit: mm [inch]

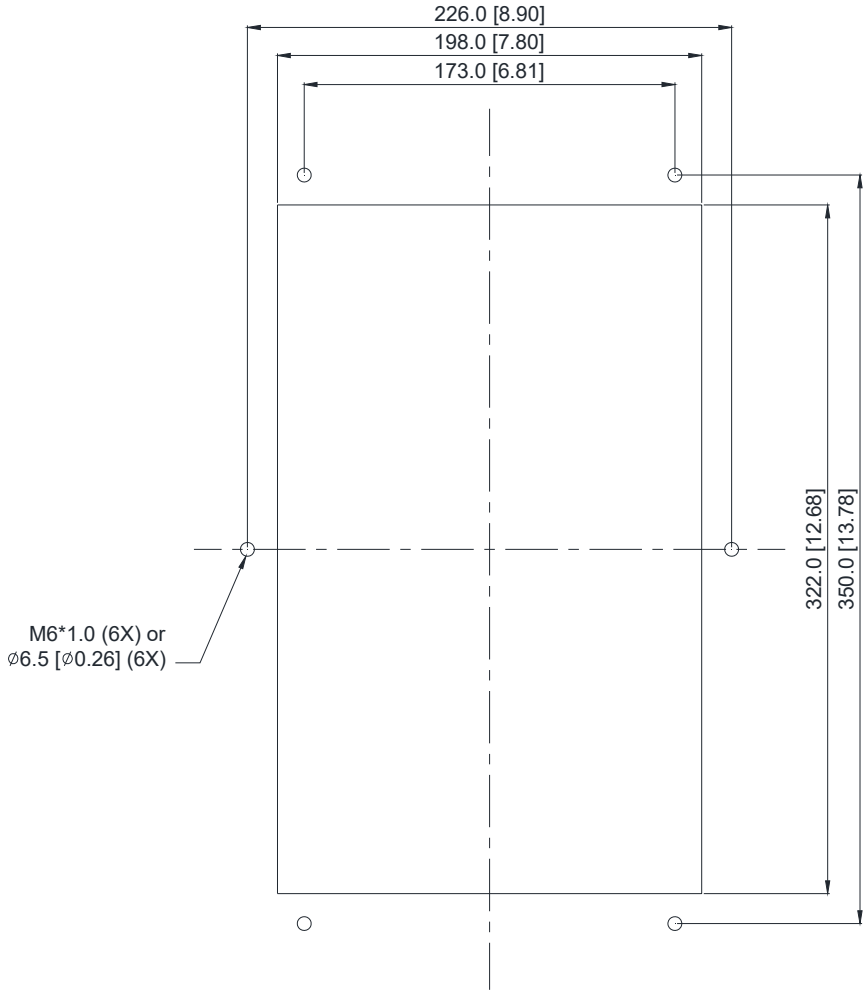

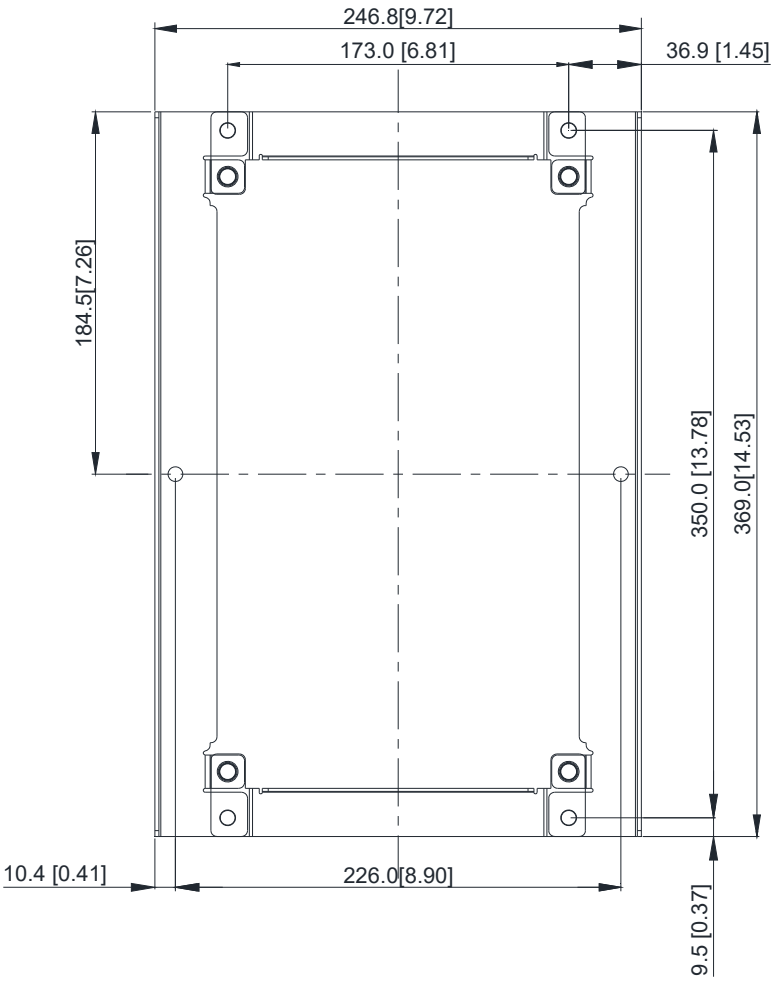
246.8[9.72]
173.0 [6.81]
36.9 [1.45]
184.5[7.26]
350.0 [13.78]
369.0[14.53]
10.4 [0.41]
226.0[8.90]
9.5 [0.37]

『MKC-BFM』Installation

1. Install accessory 1& 2 by fastening 4 of the screw 1 (M8). Screw torque: 40~45 kg-cm / [34.7~39.0 lb-in.] / [3.9~4.4 Nm] (As shown in the following figure)

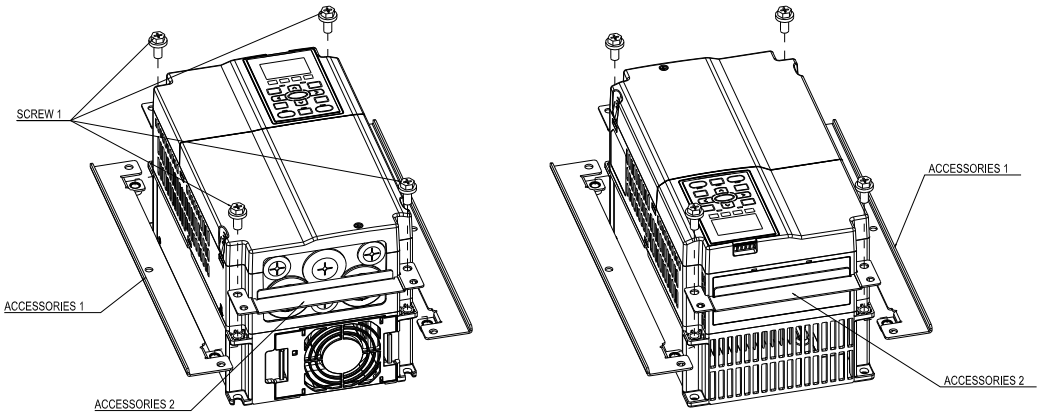

2. Plate installation, place 6 of the screw 2 (M6) through accessory 1 & 2 and the plate then fasten the screws. Screw torque: 25~30 kg-cm / [21.7~26 lb-in.] / [2.5~2.9 Nm] (As shown in the following figure)

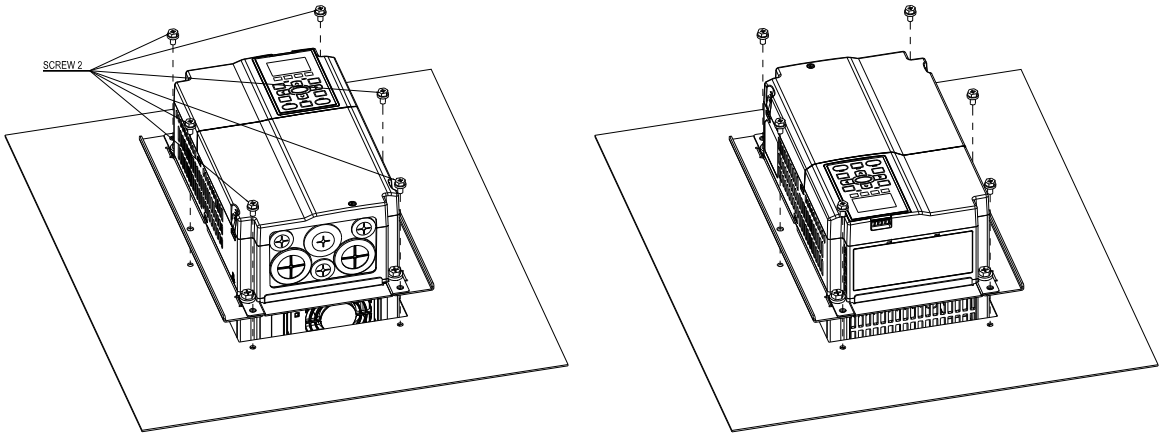

Frame C

『MKC-CFM』

Applicable model

VFD150C23A-21; VFD185C23A-21; VFD185C43A-21; VFD185C4EA-21; VFD185C63B-21; VFD220C23A-21; VFD220C43A-21; VFD220C4EA-21; VFD220C63B-21; VFD300C43A-21; VFD300C4EA-21; VFD300C63B-21; VFD370C63B-21

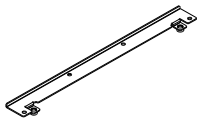

Accessory 1*2

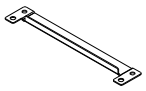

Accessory 2*2

Screw 1*4
M8*P 1.25

Screw 2*8
M6*P 1.0

Cutout dimension

Unit: mm [inch]

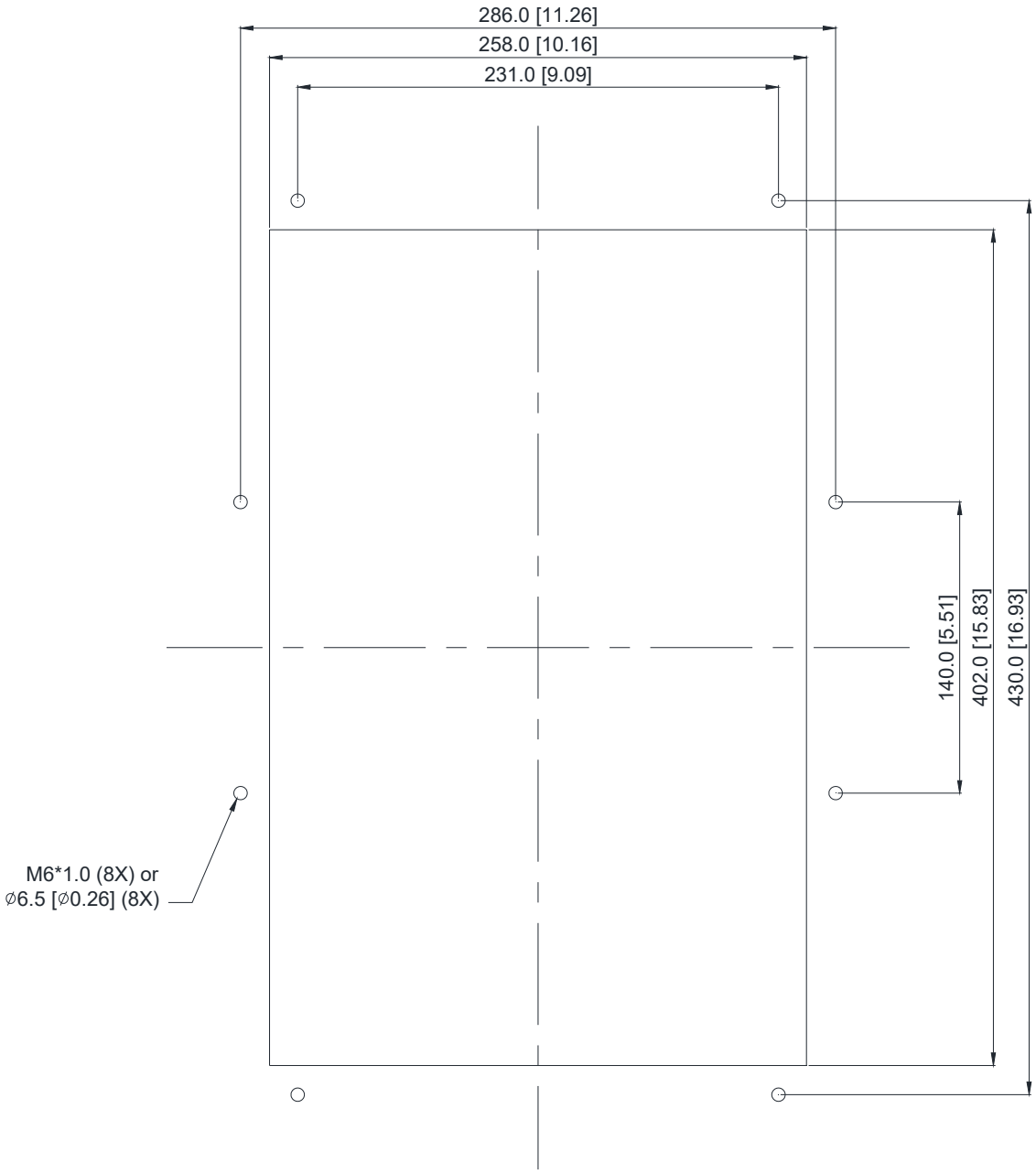

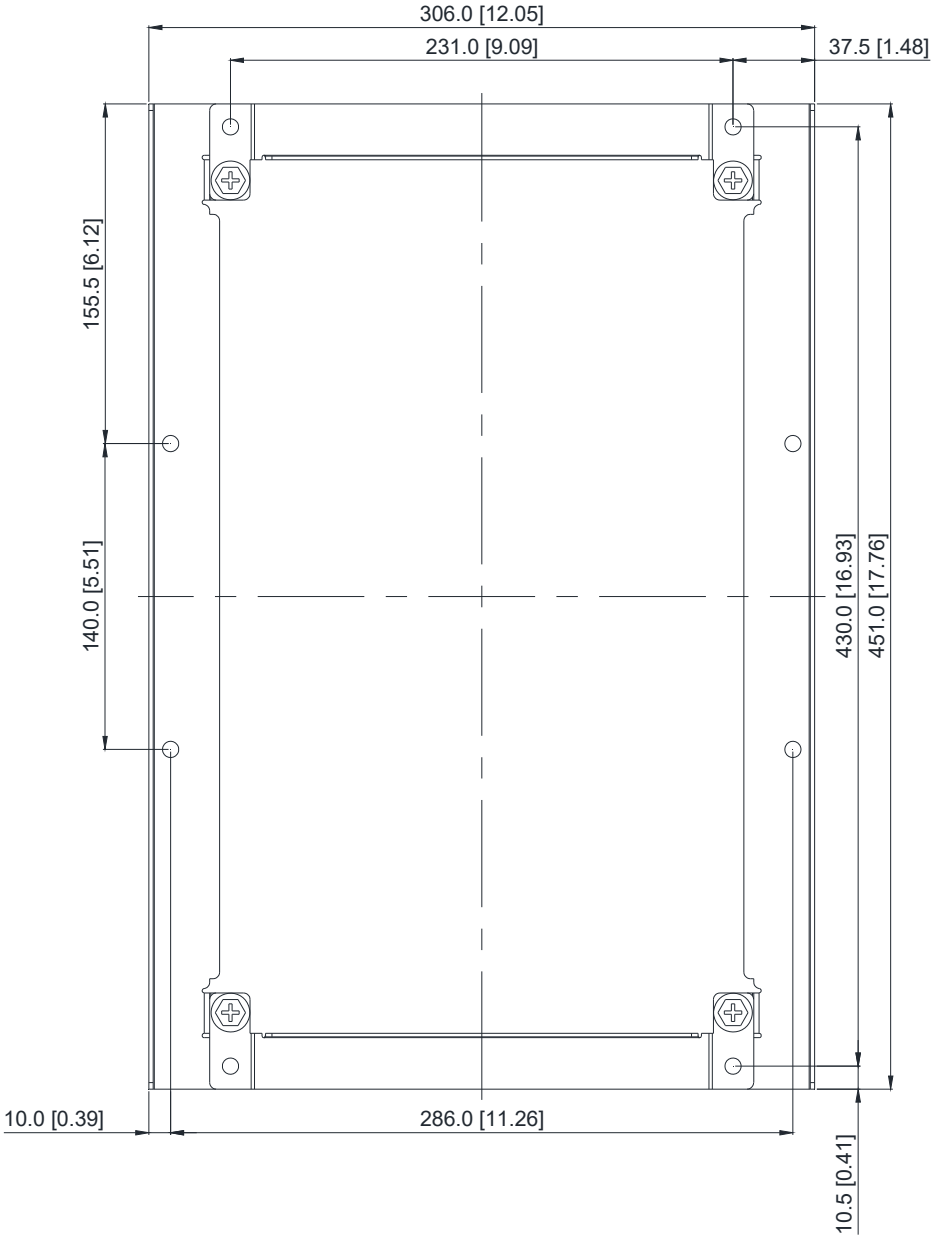
306.0 [12.05]
231.0 [9.09]
37.5 [1.48]
155.5 [6.12]
140.0 [5.51]
430.0 [16.93]
451.0 [17.76]
10.0 [0.39]
286.0 [11.26]
10.5 [0.41]

『MKC-CFM』Installation

1. Install accessory 1& 2 by fastening 4 of the screw 1(M8). Screw torque: 50~55 kg-cm / [43.4~47.7 lb-in.] / [4.9~5.4 Nm] (As shown in the following figure)

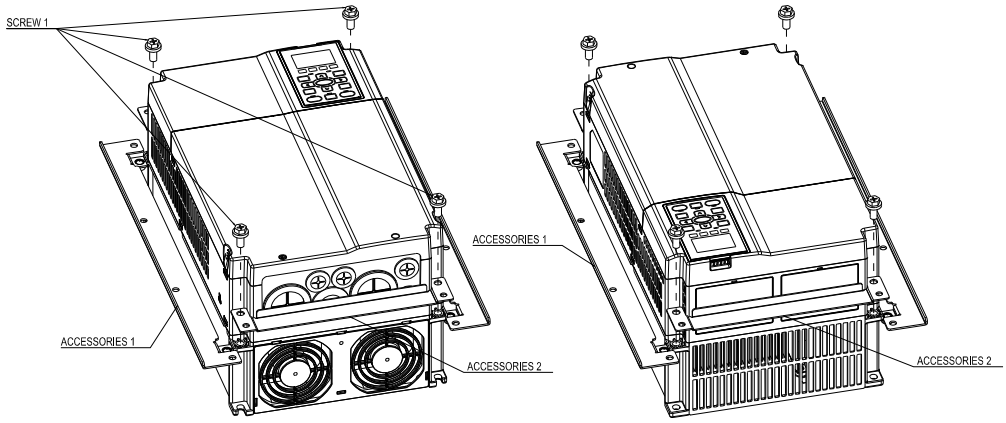

2. Plate installation, place 8 of the screw 2 (M6) through Accessory 1 & 2 and the plate then fasten the screws. Screw torque: 25~30 kg-cm / [21.7~26 lb-in.] / [2.5~2.9 Nm] (As shown in the following figure)

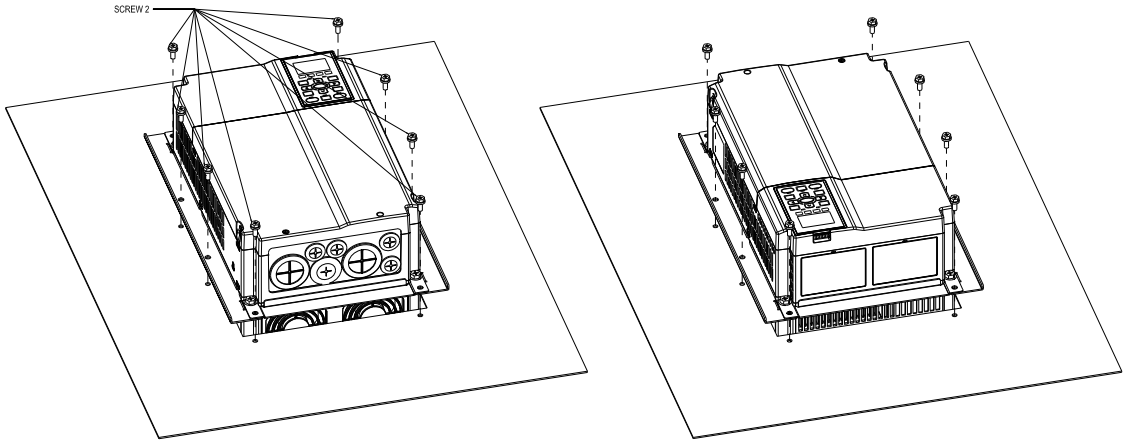

Frame D0

Applicable model

VFD370C43S-00; VFD370C43S-21; VFD450C43S-00; VFD450C43S-21

Cutout dimension

Unit: mm [inch]

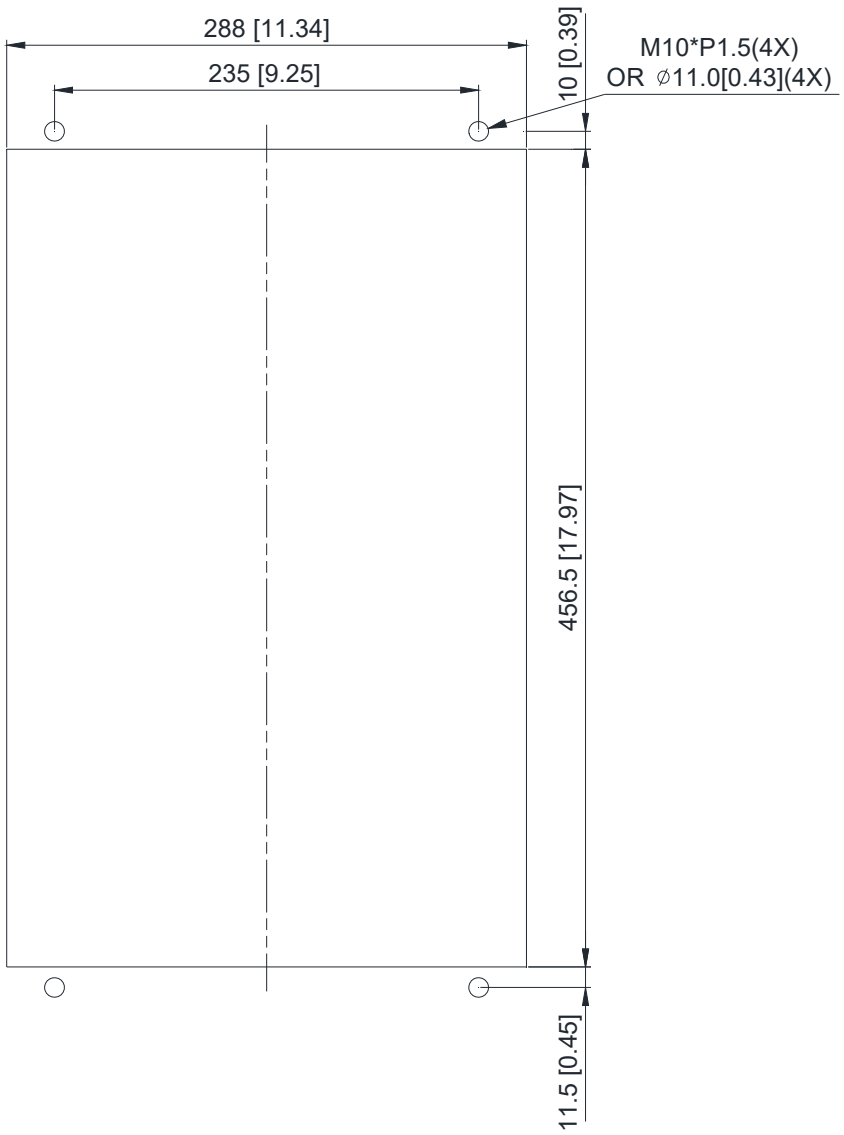

Frame D

Applicable model

VFD300C23A-00; VFD300C23A-21; VFD370C23A-00; VFD370C23A-21; VFD450C63B-00; VFD450C63B-21; VFD550C43A-00; VFD550C43A-21; VFD550C63B-00; VFD550C63B-21; VFD750C43A-00; VFD750C43A-21

Cutout dimension

Unit: mm [inch]

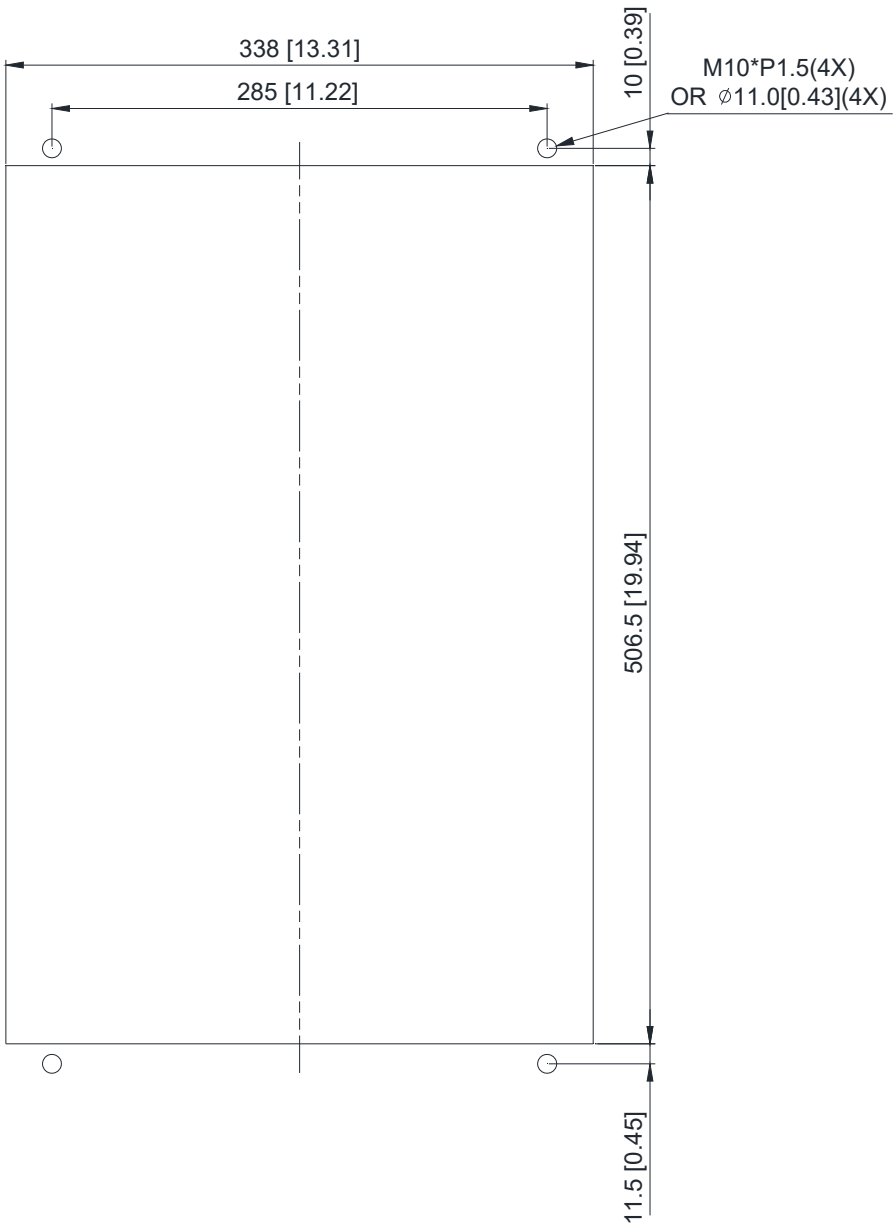

Frame E

Applicable model

VFD450C23A-00; VFD450C23A-21; VFD550C23A-00; VFD550C23A-21; VFD750C23A-00; VFD750C23A-21; VFD750C63B-00; VFD750C63B-21; VFD900C43A-00; VFD900C43A-21; VFD900C63B-00; VFD900C63B-21; VFD1100C43A-00; VFD1100C43A-21; VFD1100C63B-00; VFD1100C63B-21; VFD1320C63B-00; VFD1320C63B-21

Cutout dimension

Unit: mm [inch]

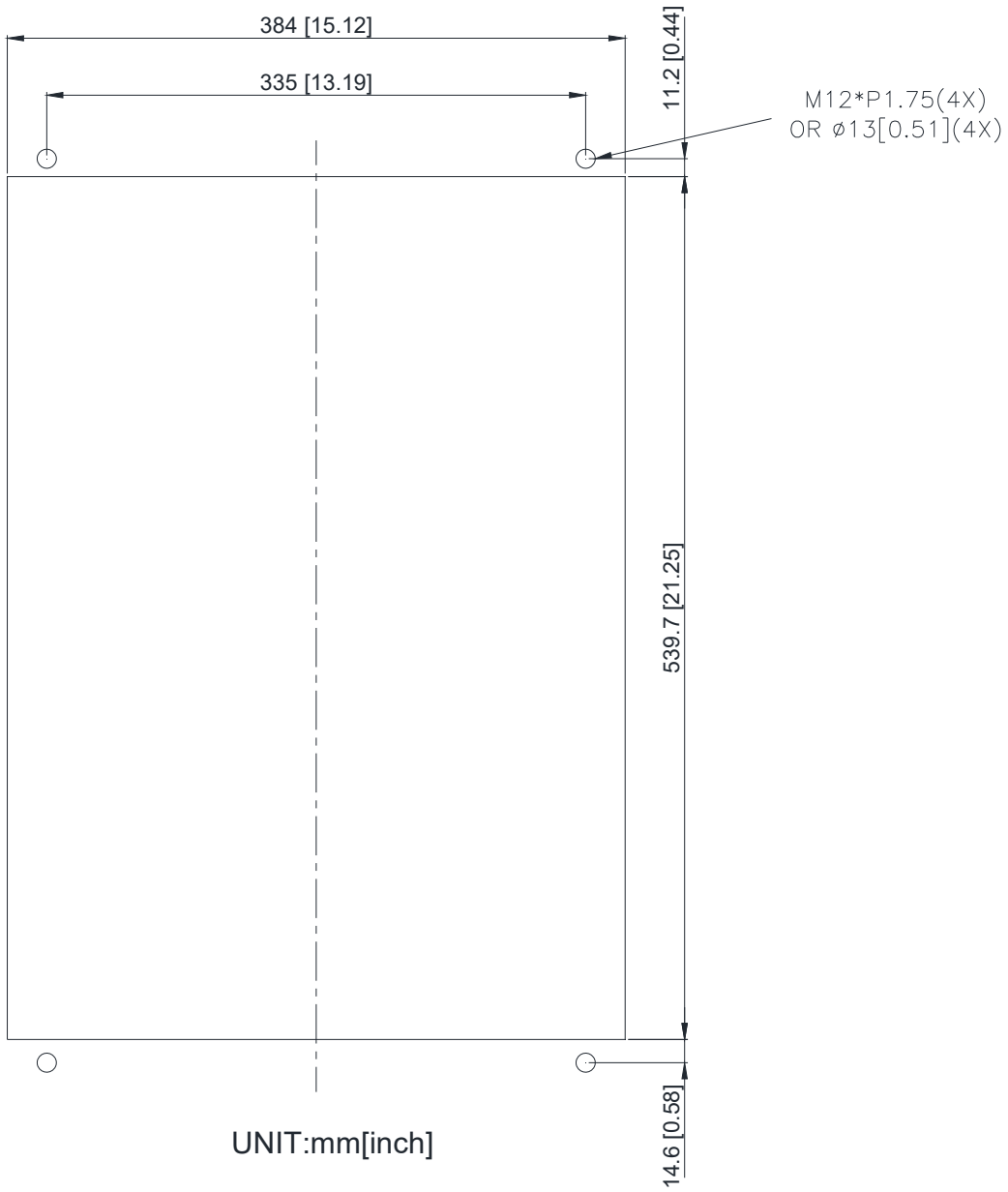

Frame D0 & D & E

1. Loosen 8 screws and remove Fixture 2 (as shown in the following figure).

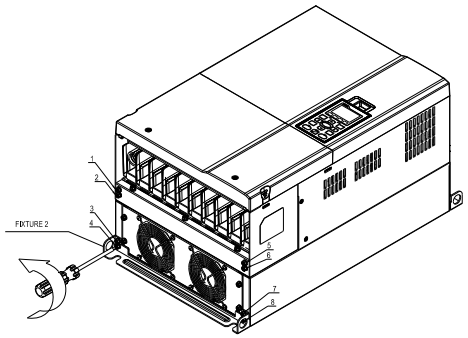

2. Loosen 10 screws and remove Fixture 1 (as shown in the following figure).

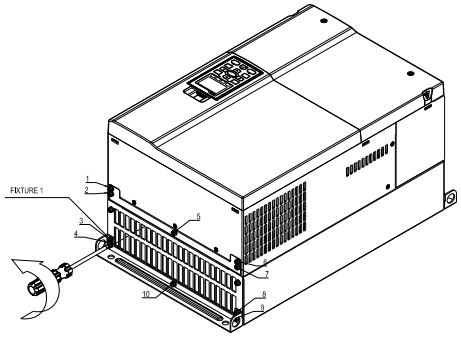

3. Fasten 4 screws (as shown in the following figure). Screw torque: 30~32 kg-cm / [26.0~27.8 lb-in.] / [2.9~3.1 Nm].

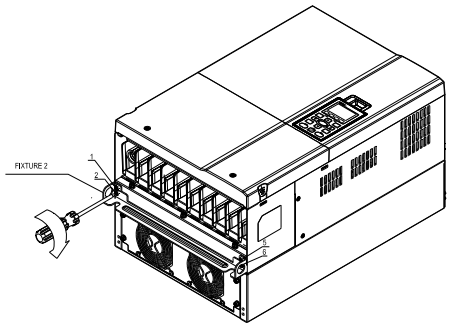

4. Fasten 5 screws (as shown in the following figure). Screw torque: 30~32 kg-cm / [26.0~27.8 lb-in.] / [2.9~3.1 Nm]

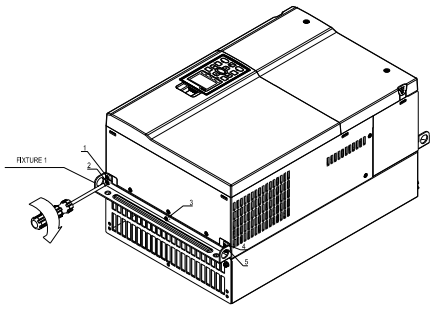

5. Fasten 4 screws (as shown in the following figure). Screw torque: 24~26 kg-cm / [20.8~22.6 lb-in.] / [2.4~2.5 Nm]

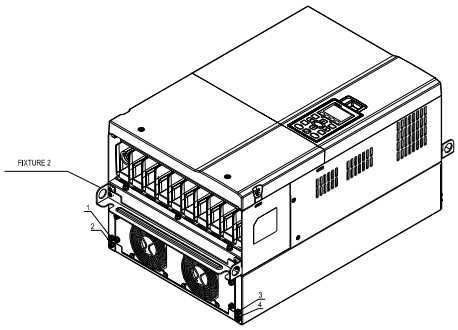

6. Fasten 5 screws (as shown in the following figure). Screw torque: 24~26 kg-cm / [20.8~22.6 lb-in.] / [2.4~2.5 Nm]

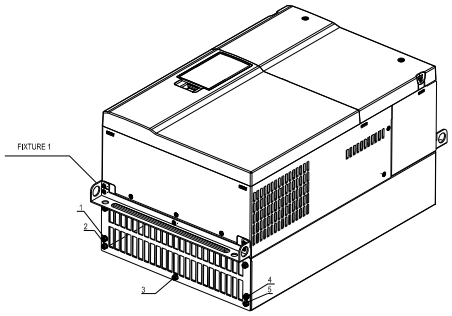

7. Place 4 screws (M10) through Fixture 1 & 2 and the plate then fasten the screws. (as shown in the following figure)
   Frame D0/D M10*4
   Screw torque: 200~240 kg-cm / [173.6~208.3 lb-in.] / [19.6~235 Nm]
   Frame E M12*4
   Screw torque: 300~400 kg-cm / [260~347 lb-in.] / [29.4~39.2 Nm]

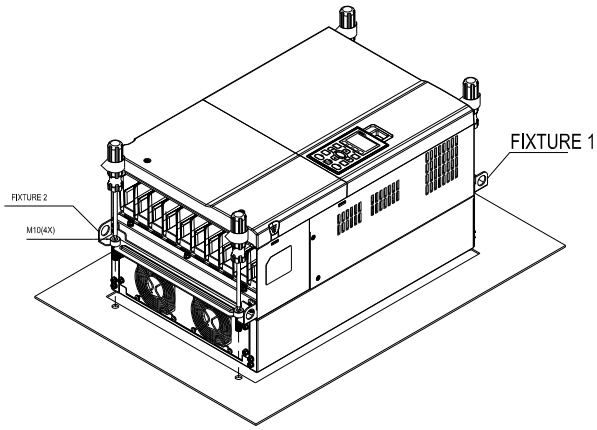

Frame F

Applicable model

VFD900C23A-00; VFD900C23A-21; VFD1320C43A-00; VFD1320C43A-21; VFD1600C43A-00; VFD1600C43A-21; VFD1600C63B-00; VFD1600C63B-21; VFD2000C63B-00; VFD2000C63B-21

Cutout dimension Unit: mm [inch]

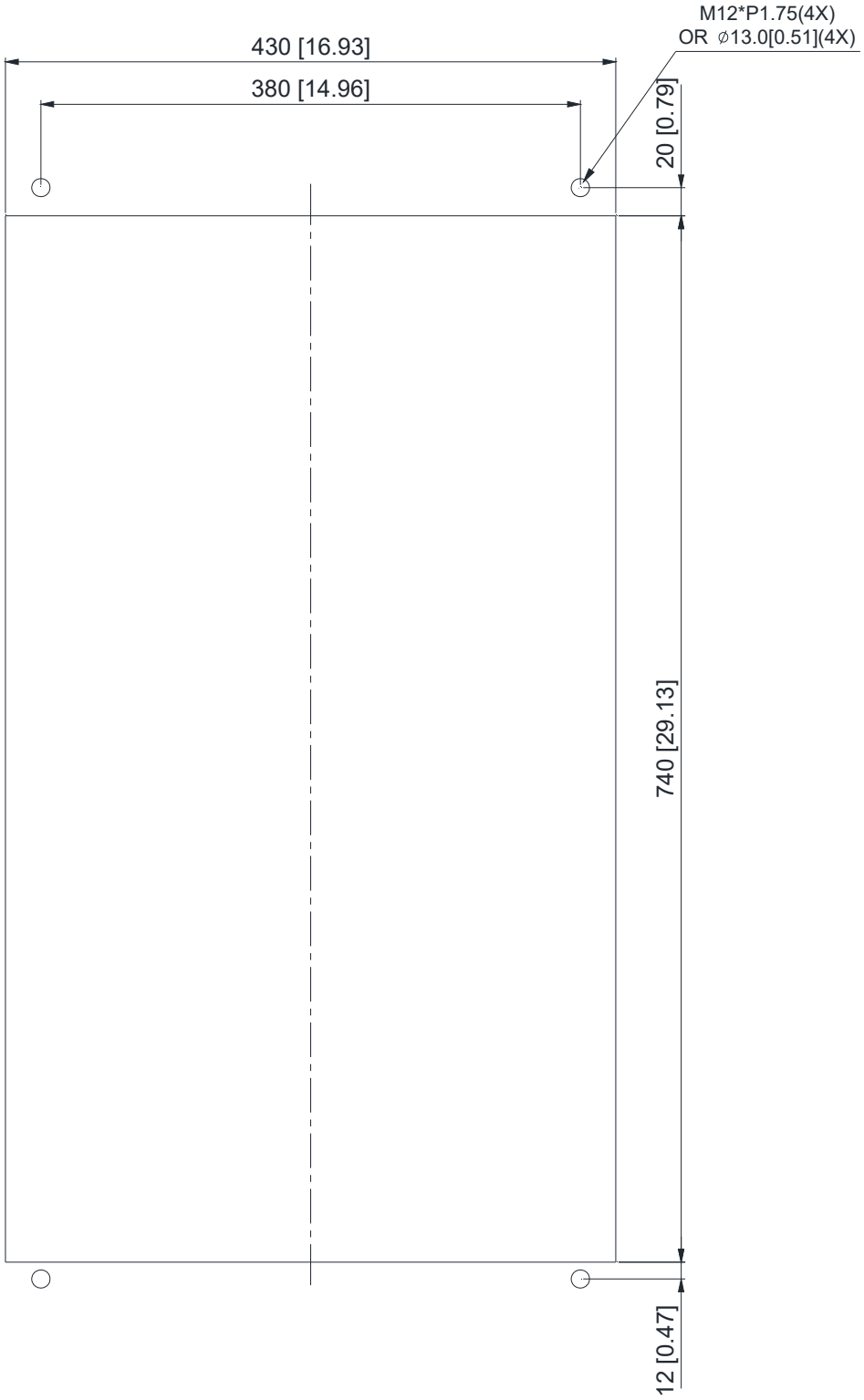

Frame F

1. Loosen 12 screws and remove Fixture 2.

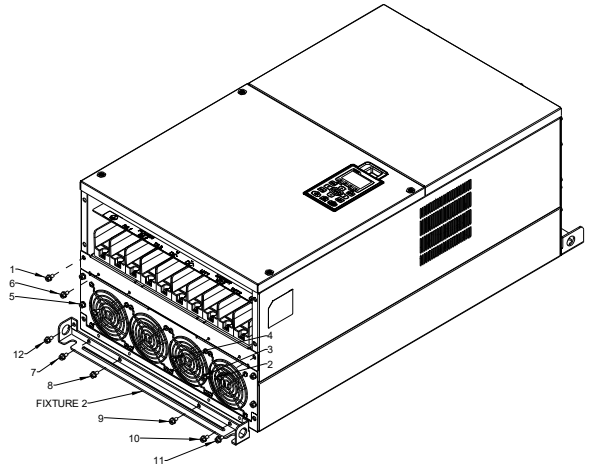

2. Loosen 12 screws and remove Fixture 2.
Screw torque: 24~26 kg-cm / [20.8~22.6 lb-in.] / [2.4~2.5 Nm]

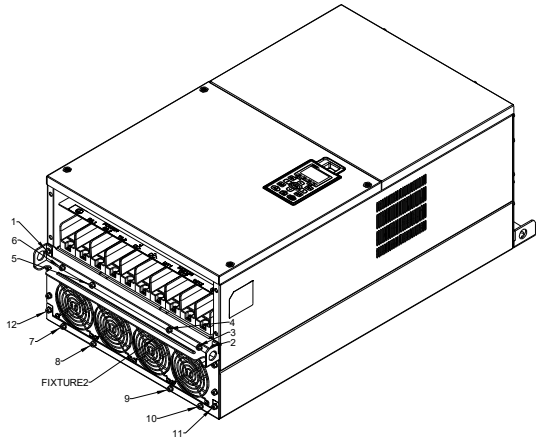

3. Loosen screw 13 ~26 and remove Fixture 1.

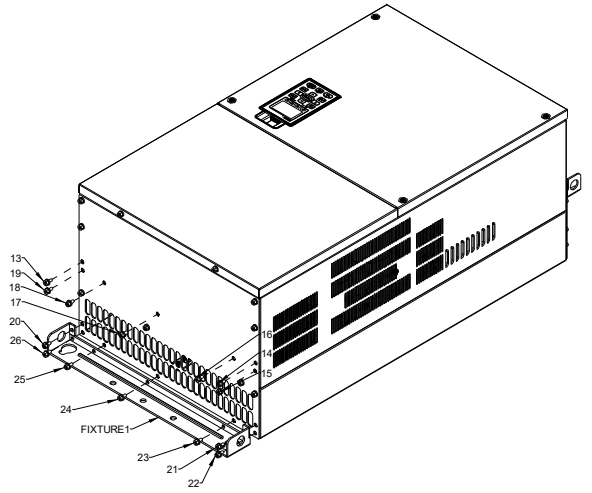

4. Install Fixture 1 by fasten screw 13 ~26
Screw torque: 24~26 kg-cm / [20.8~22.6 lb-in.] / [2.4~2.5 Nm]

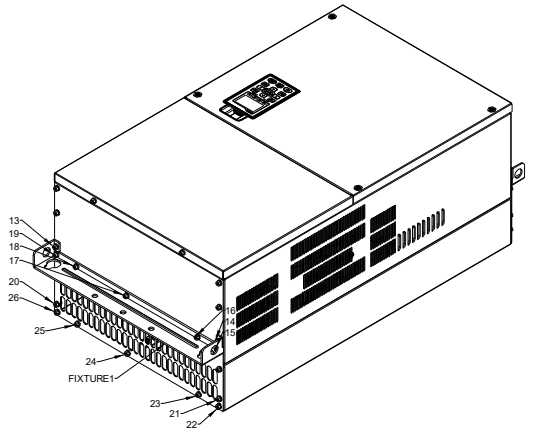

5. Place 4 of the M12 screws through Fixture 1&2 and plate then fasten the screws.
Screw torque: 300~400 kg-cm / [260~347 lb-in.] / [29.4~39.2 Nm]

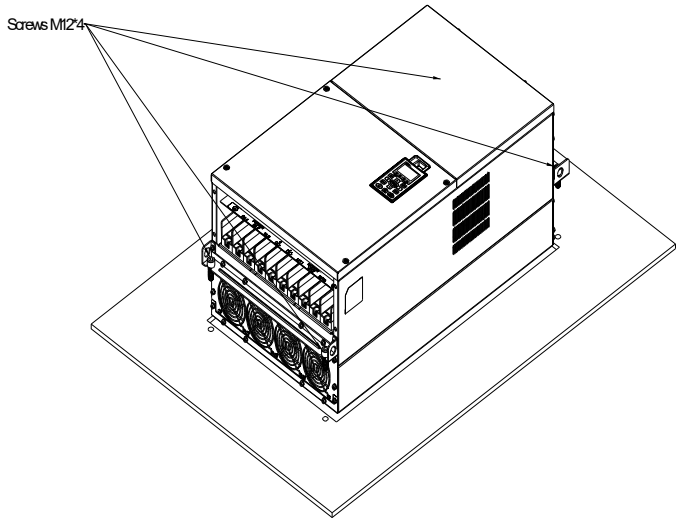

7-11 Power Terminal Kit

『MKC-PTCG』

Applicable models: VFD1850C43A-00; VFD2200C43A-00
(MKC-PTCG is optional for the models above. 12 pulse becomes 6 pulse when the installation is done.)

Accessories

Item	Description	Q'ty
1	Copper Assy.	3
1.1	Copper	3
1.2	Screw M12*25L	6
1.3	Spring	6
1.4	Washer	6
1.5	Nuts	6

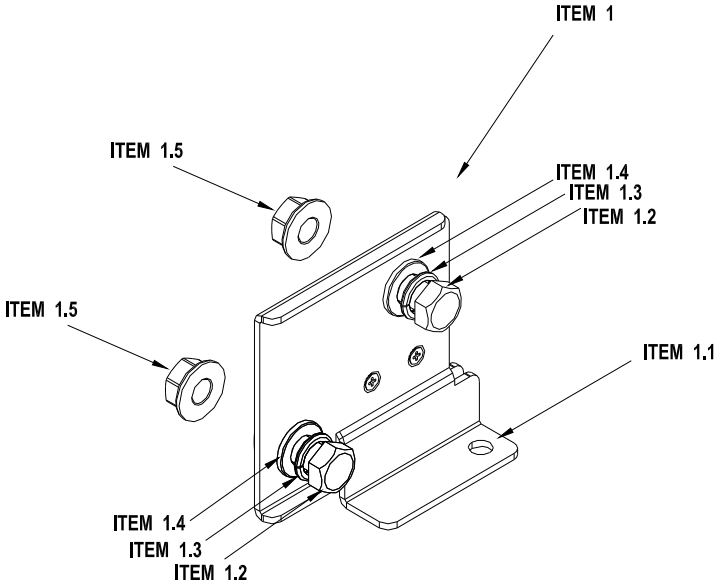

Diagram of power terminal connection
M12 torque: 408 kg-cm / [354.1 lb-in] / [39.98 Nm]

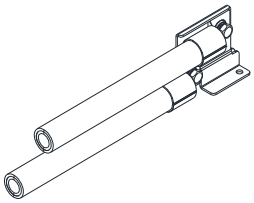

『MKC-PTCG』Installation

1. Loosen the 4 screws on the cover, as shown in the following figure. Screw Torque: 12~15 kg-cm / [10.4~13 lb-in] / [1.2~1.5 Nm]

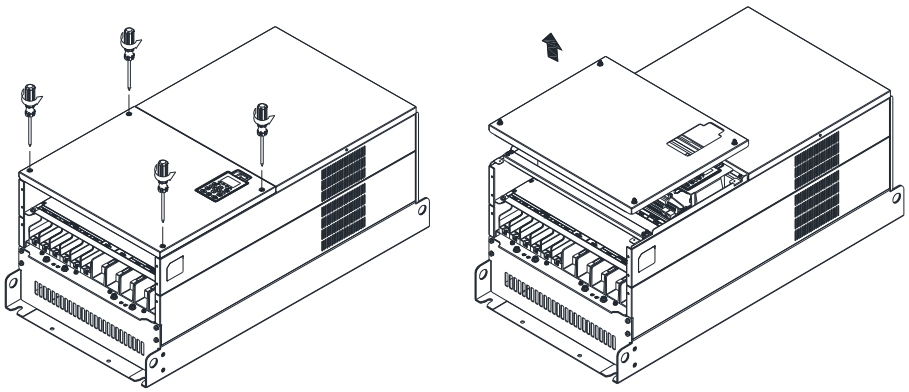

2. Remove the 5 screws from the FR4 board, as shown in the following figure. (The FR4 board is not needed after the installation of the power terminal kit). Screw Torque: 12~15 kg-cm / [10.4~13 lb-in] / [1.2~1.5 Nm]

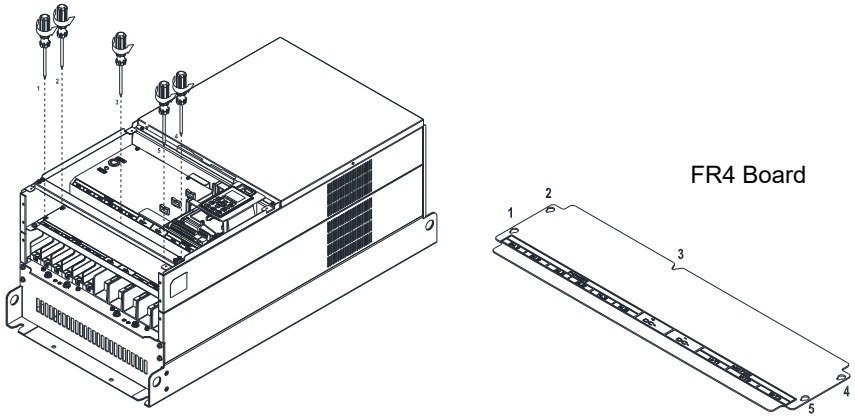

3. Loosen the upper M8 nuts (1~6) with a sleeve wrench (12mm of the sleeve). M8 Torque: 90kg / [78.1 lb-in] / [8.8 Nm]

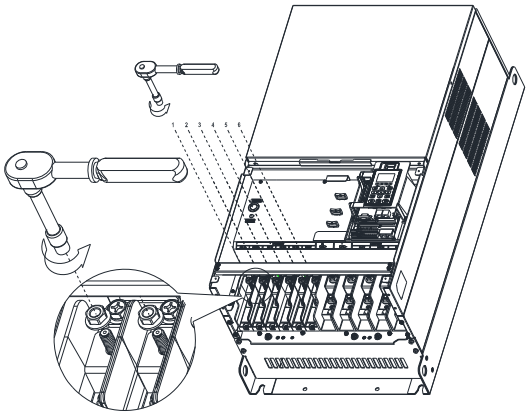

4. Install the 3pcs copper assy., as shown in the following figure 1. Fasten the upper M8 nuts (1~6) with a sleeve wrench (12mm of the sleeve), as shown in the figure 2 below.
M8 Torque: 180 kg-cm / [156.2 lb-in] / [17.65 Nm]

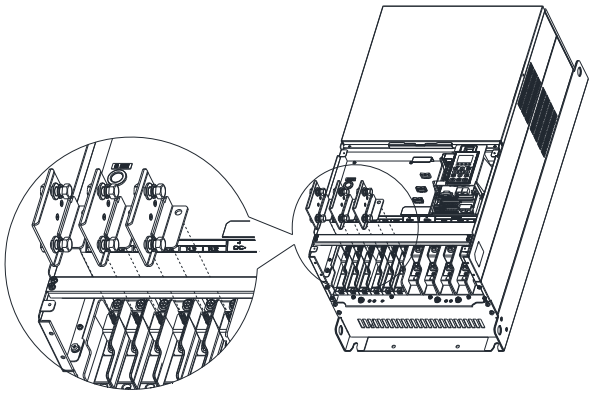

Figure 1

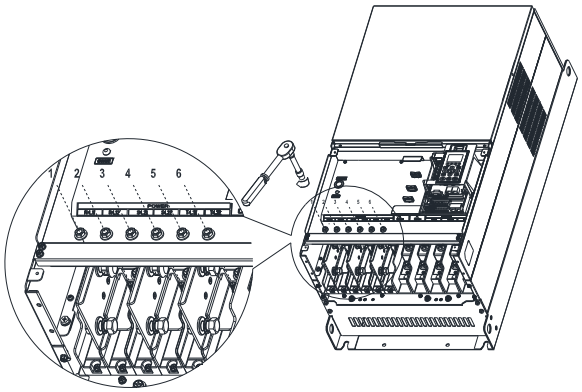

Figure 2

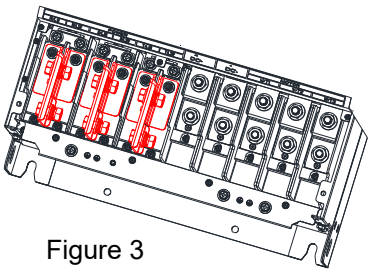

Copper Assy. Installation complete

Figure 3

5. Put the cover back and fasten the screws as shown in the figure below. Screw Torque: 12~15 kg-cm / [10.4~13 lb-in] / [1.2~1.5 Nm]

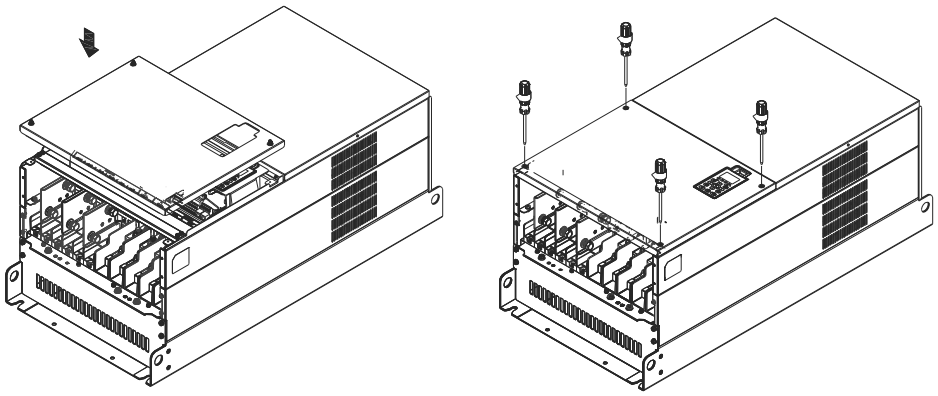

7-12 USB/RS-485 Communication Interface IFD6530

Warning

✓ *Please thoroughly read this instruction sheet before installation and putting it into use.*

✓ *The content of this instruction sheet and the driver file may be revised without prior notice.*

Please consult our distributors or download the most updated instruction/ driver version at http://www.delta.com.tw/product/em/control/cm/control_cm_main.asp

1. Introduction

IFD6530 is a convenient RS485-to-USB converter, which does not require external power-supply and complex setting process. It supports baud rate from 75 to 115.2Kbps and auto switching direction of data transmission. In addition, it adopts RJ-45 in RS485 connector for users to wire conveniently. And its tiny dimension, handy use of plug-and-play and hot-swap provide more conveniences for connecting all DELTA IABG products to your PC.

Applicable Models: All DELTA IABG products.

(Application & Dimension)

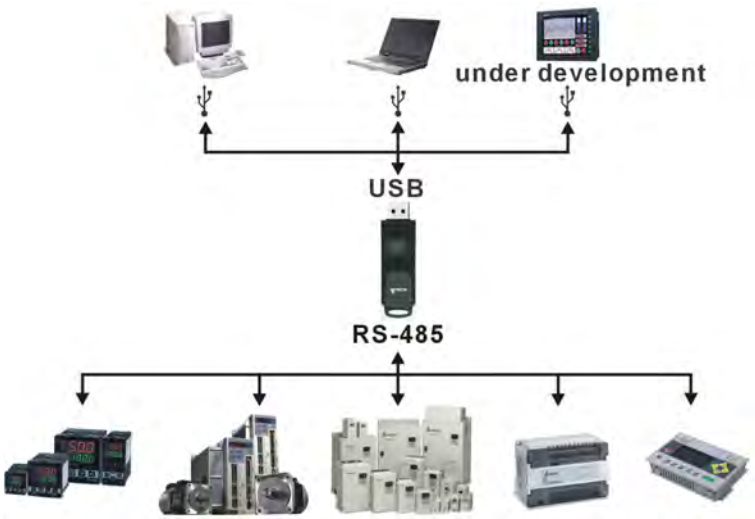

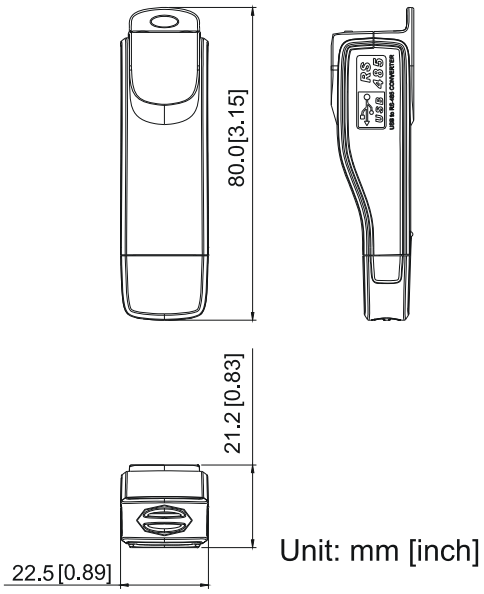

2. Specifications

Power supply	No external power is needed
Power consumption	1.5W
Isolated voltage	2,500V_{DC}
Baud rate	75Kbps, 150Kbps, 300Kbps, 600Kbps, 1,200Kbps, 2,400Kbps, 4,800Kbps, 9,600Kbps, 19,200Kbps, 38,400Kbps, 57,600Kbps, 115,200Kbps
RS-485 connector	RJ-45
USB connector	A type (plug)
Compatibility	Full compliance with USB V2.0 specification
Max. cable length	RS-485 Communication Port: 100 m
Support RS-485 half-duplex transmission	

Table 7-73

■ **RJ-45**

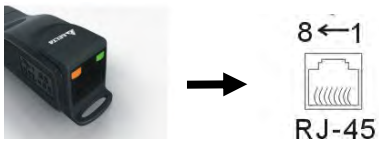

PIN	Description
1	Reserved
2	Reserved
3	GND
4	SG-

PIN	Description
5	SG+
6	GND
7	Reserved
8	+9V

3. Preparations before Driver Installation

Please extract the driver file (IFD6530_Drivers.exe) by following steps.

You could find driver file (IFD6530_Drivers.exe) in the CD supplied with IFD6530.

Note: DO NOT connect IFD6530 to PC before extracting the driver file.

STEP 1

STEP 2

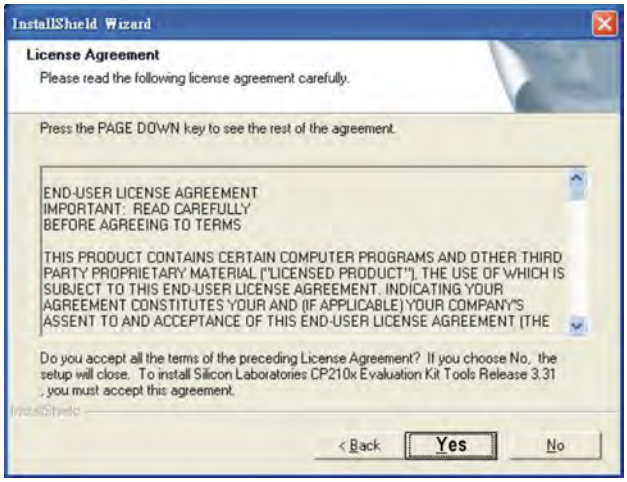

STEP 3

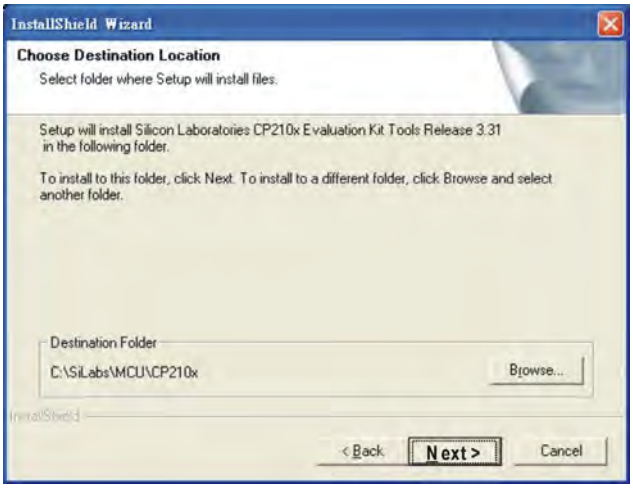

STEP 4

STEP 5

You should have a folder marked SiLabs under drive C. c:\ SiLabs

4. Driver Installation

After connecting IFD6530 to PC, please install driver by following steps.

STEP 1

STEP 2

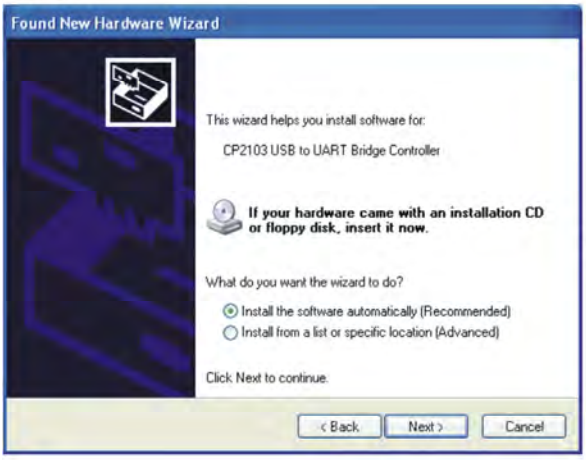

OR

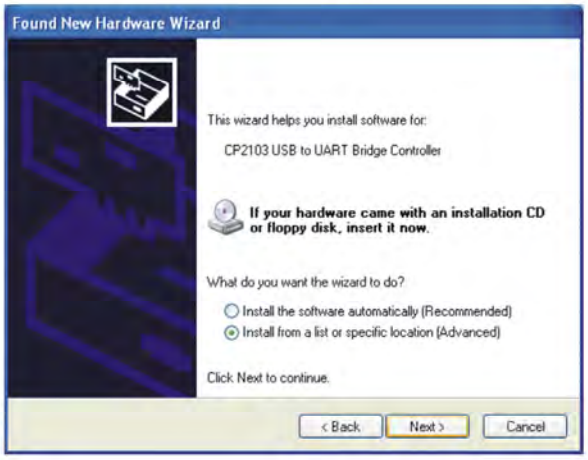

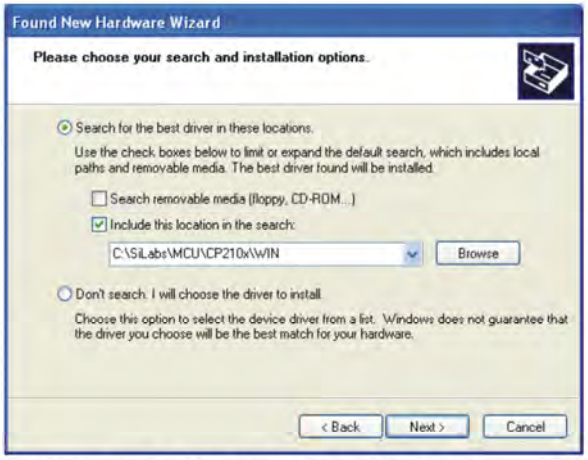

Browse and select directory, or enter C:\SiLabs\MCU\CP210x\WIN

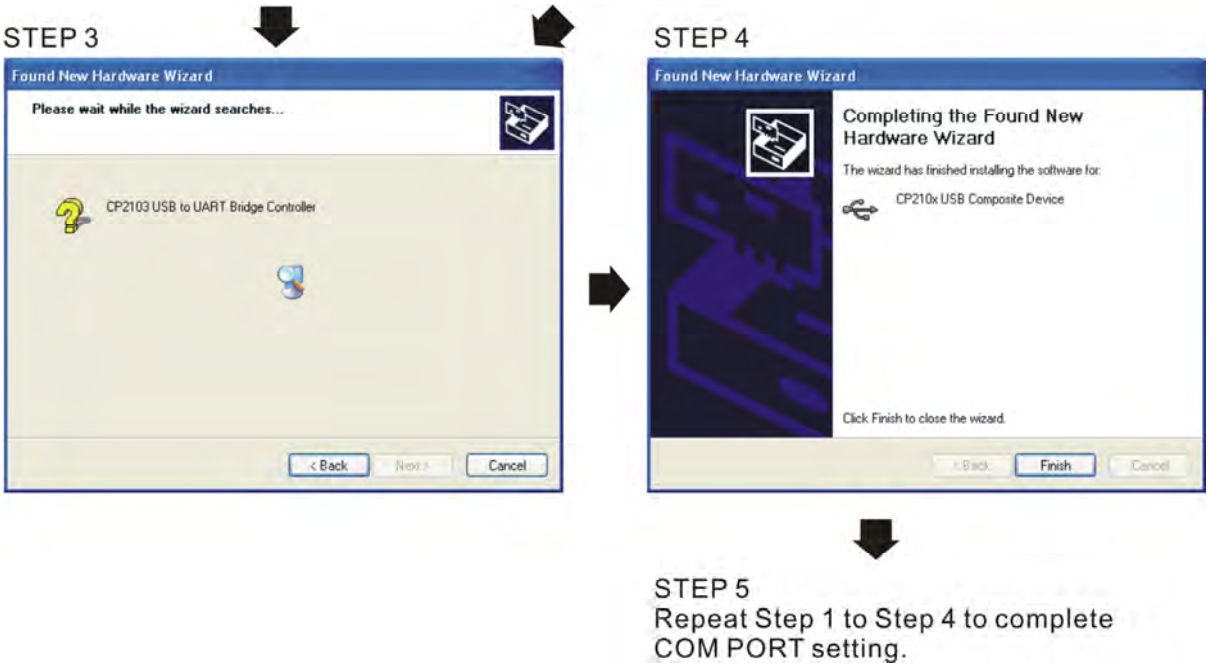

5. LED Display

1. Steady Green LED ON: power is ON.
2. Blinking orange LED: data is transmitting.

[This page intentionally left blank]

Chapter 8 Option Cards

8-1 Option Card Installation

8-2 EMC-D42A -- Extension card for 4-point digital input/ 2-point digital input

8-3 EMC-D611A -- Extension card for 6-point digital input (110V_{AC} input voltage)

8-4 EMC-R6AA -- Relay output extension card (6-point N.O. output contact)

8-5 EMC-BPS01 -- +24V power card

8-6 EMC-A22A -- Extension card for 2-point analog input/ 2-point analog output

8-7 EMC-PG01L / EMC-PG02L -- PG card (Line driver)

8-8 EMC-PG01O / EMC-PG02O -- PG card (Open collector)

8-9 EMC-PG01U / EMC-PG02U -- PG card (ABZ Incremental encoder signal/ UVW Hall position signal input)

8-10 EMC-PG01R -- PG card (Resolver)

8-11 EMC-PG01H -- PG card (Resolver)

8-12 CMC-PD01 -- Communication card, PROFIBUS DP

8-13 CMC-DN01 -- Communication card, DeviceNet

8-14 CMC-EIP01 -- Communication card, EtherNet/IP

8-15 CMC-EC01 -- Communication card, EtherCAT

8-16 CMC-PN01 -- Communication card, PROFINET

8-17 EMC-COP01 -- Communication card, CANopen

8-18 Delta Standard Fieldbus Cables

- The option cards in this chapter are optional accessories. Select the applicable option cards for your motor drive, or contact your local distributor for suggestions. The option cards can significantly improve the efficiency of the motor drive.
- To prevent damage to the motor drive during installation, remove the digital keypad and the cover before wiring.
- The option cards do not support hot swapping. Power off the motor drive before you install or remove the option cards.

8-1 Option Card Installation

8-1-1 Remove the top cover

Frame A–C
Screw Torque: 8–10 kg-cm / [6.9–8.7 lb-in.] / [0.8–1.0 Nm]

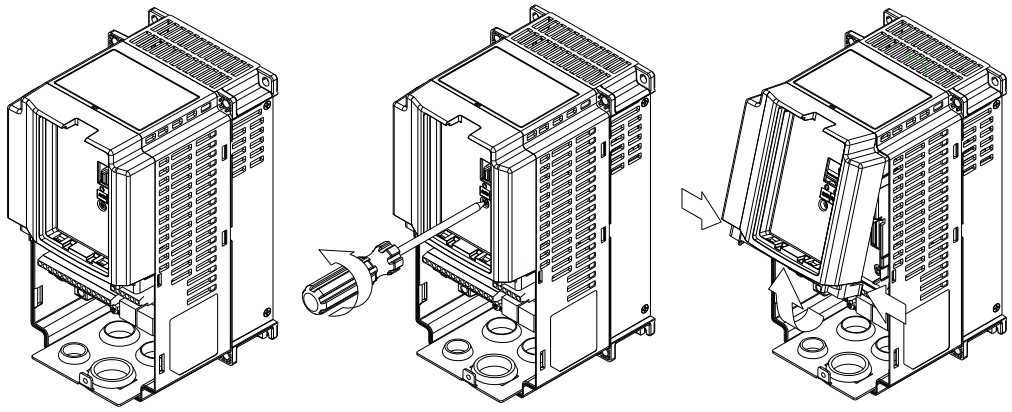

Frame D0
Screw Torque: 8–10 kg-cm / [6.9–8.7 lb-in.] / [0.8–1.0 Nm]

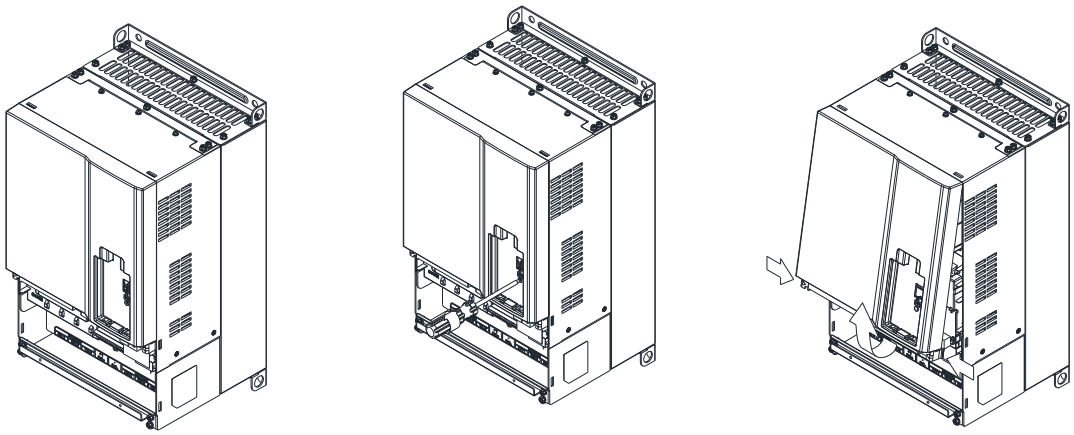

Frame D
Screw Torque: 8–10 kg-cm / [6.9–8.7 lb-in.] / [0.8–1.0 Nm]

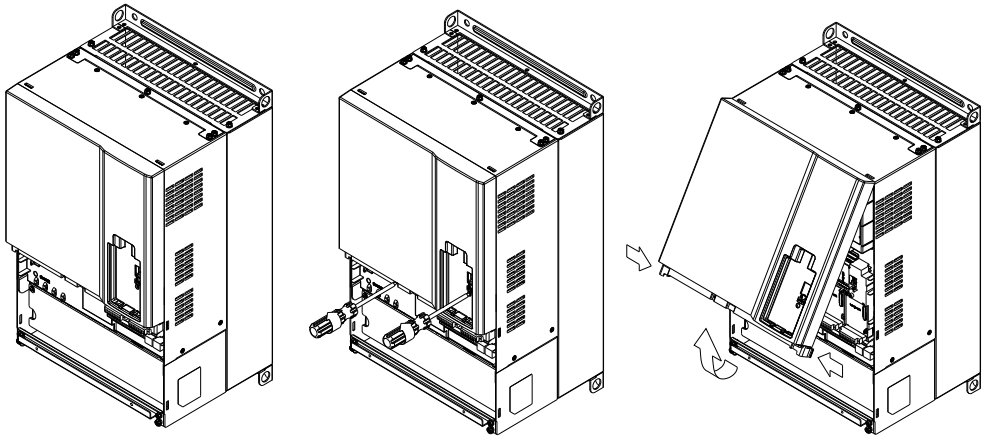

Frame E
Screw Torque: 12–15 kg-cm / [10.4–13 lb-in.] / [1.2–1.5 Nm]

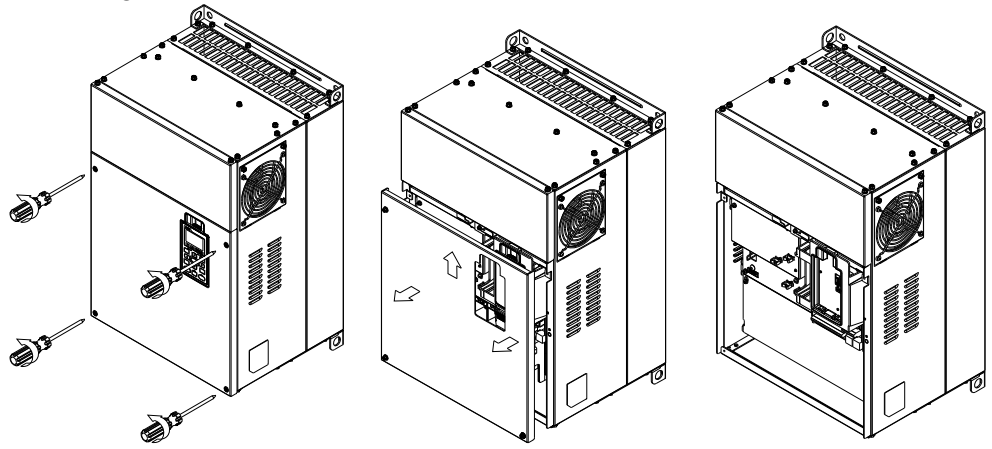

Frame F
Screw Torque: 12–15 kg-cm / [10.4–13 lb-in.] / [1.2–1.5 Nm]

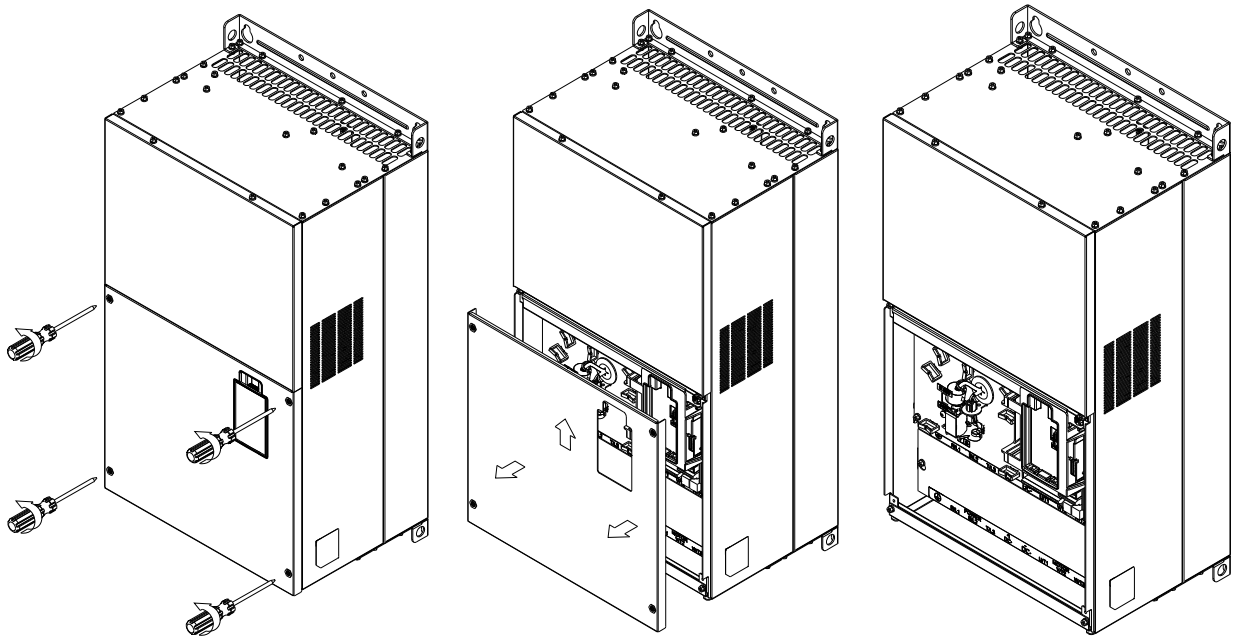

Frame G
Screw Torque: 12–15 kg-cm / [10.4–13 lb-in.] / [1.2–1.5 Nm]

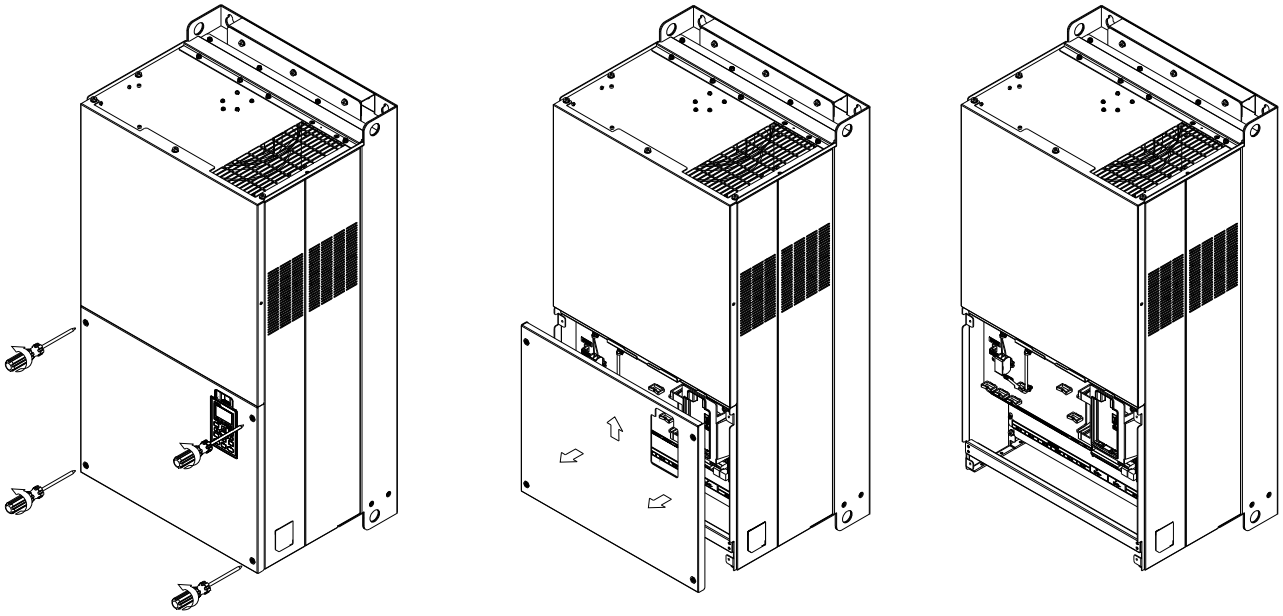

Frame H
Screw Torque: 14–16 kg-cm / [12.15–13.89 lb-in.] / [1.4–1.6 Nm]

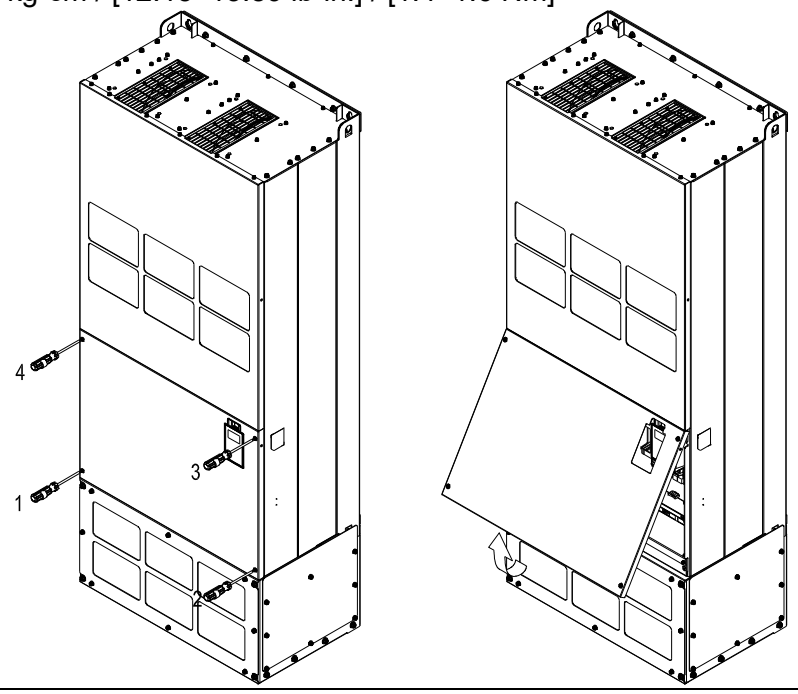

8-1-2 Option Card Installation Location

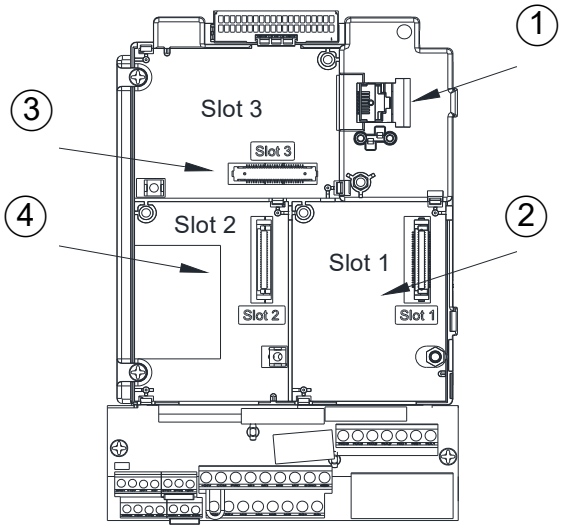

1	RJ45 (Socket) for digital keypad KPC-CC01 ☑ Refer to CH10 Digital Keypad for more details on KPC-CC01. ☑ Refer to CH10 Digital Keypad for more details on optional accessory RJ45 extension cable.
2	Communication extension card (Slot 1) CMC-PD01; CMC-DN01; CMC-EIP01; EMC-COP01; CMC-EC01; CMC-PN01
3	I/O & Relay extension card (Slot 3) EMC-D42A; EMC-D611A; EMC-R6AA; EMC-BPS01; EMC-A22A
4	PG Card (Slot 2) EMC-PG01L; EMC-PG02L; EMC-PG01O; EMC-PG02O; EMC-PG01U; EMC-PG02U; EMC-PG01R; EMC-PG01H

Screws Specification for option card terminals:

EMC-D42A; EMC-D611A; EMC-BPS01	Wire gauge	0.2–0.5 mm^2 [26–20 AWG]
	Torque	5 kg-cm / [4.4 lb-in] / [0.5 Nm]
EMC-R6AA	Wire gauge	0.2–0.5 mm^2 [26–20 AWG]
	Torque	8 kg-cm / [7 lb-in] / [0.8 Nm]
EMC-A22A	Wire gauge	0.2–4 mm^2 [24–12 AWG]
	Torque	5 kg-cm / [4.4 lb-in] / [0.5 Nm]
EMC-PG01L；EMC-PG02L；EMC-PG01O；EMC-PG02O；EMC-PG01U；EMC-PG02U；EMC-PG01R；EMC-PG01H	Wire gauge	0.2–0.5 mm^2 [26–20 AWG]
	Torque	2 kg-cm / [1.73 lb-in] / [0.2 Nm]

I/O & Relay extension card (Slot 3)

EMC-D42A

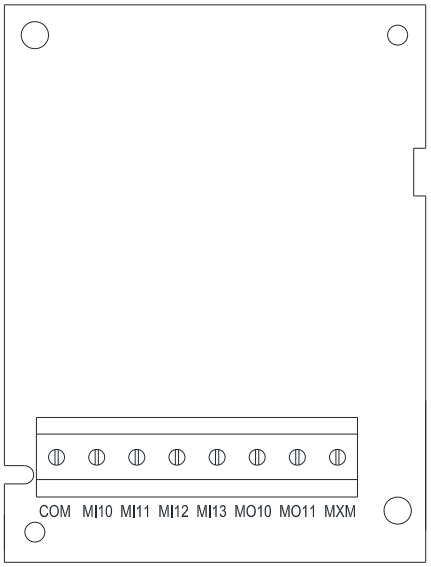

EMC-R6AA

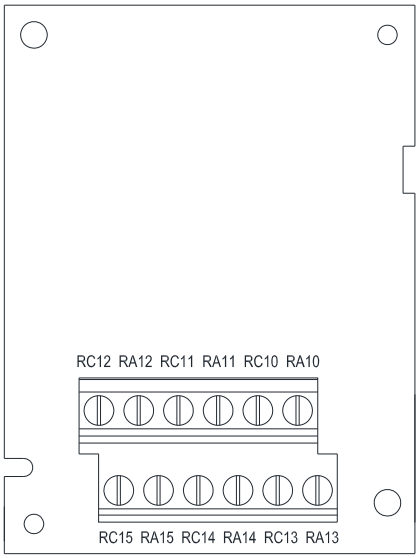

EMC-BPS01

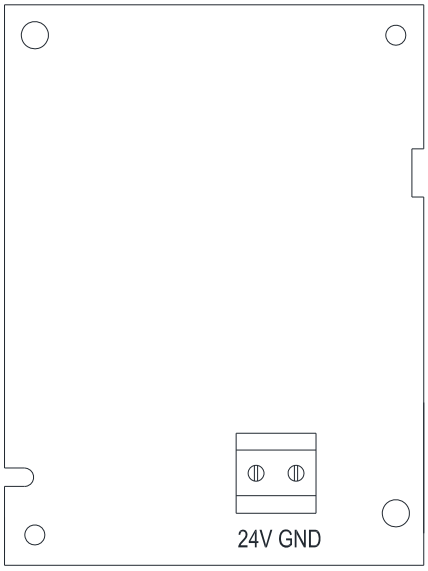

EMC-D611A

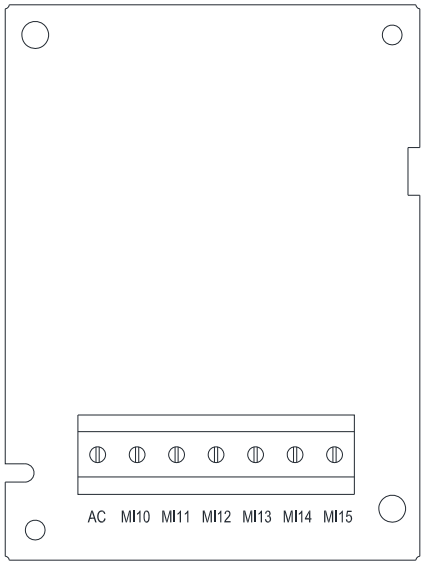

EMC-A22A

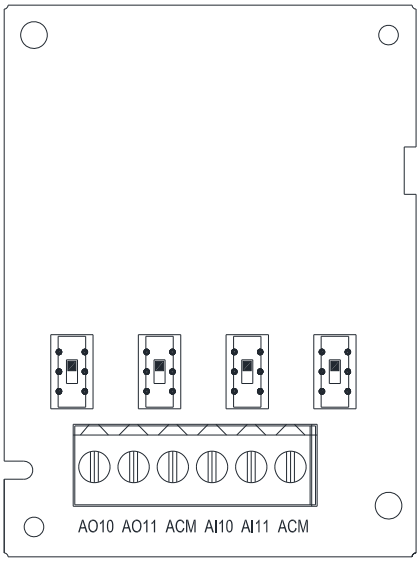

PG card (Slot 2)

EMC-PG01O / EMC-PG02O

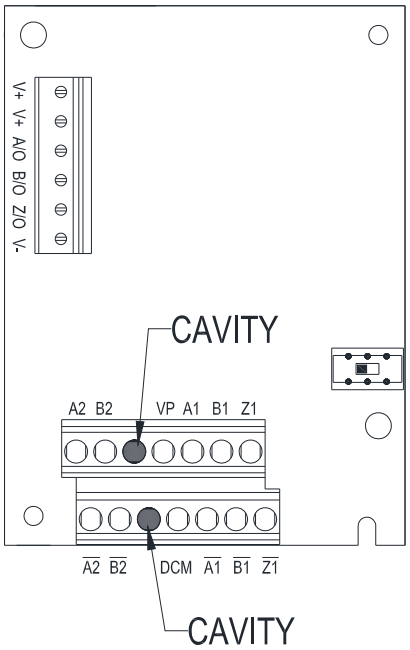

EMC-PG01L / EMC-PG02L

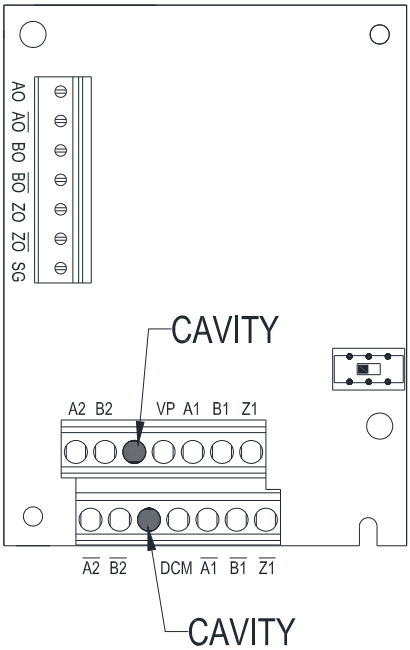

EMC-PG01U / EMC-PG02U

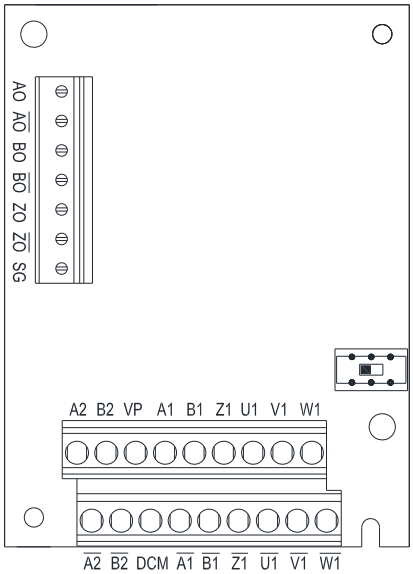

EMC-PG01R

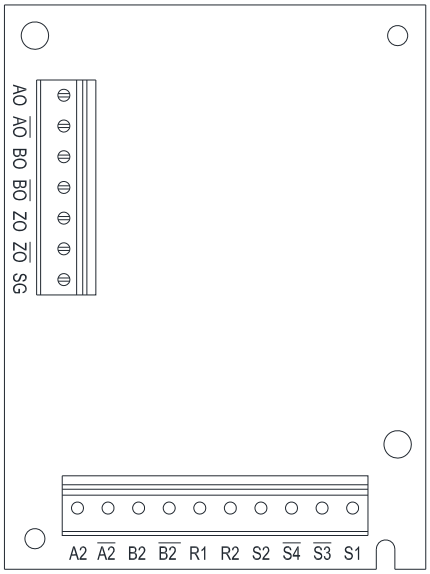

EMC-PG01H

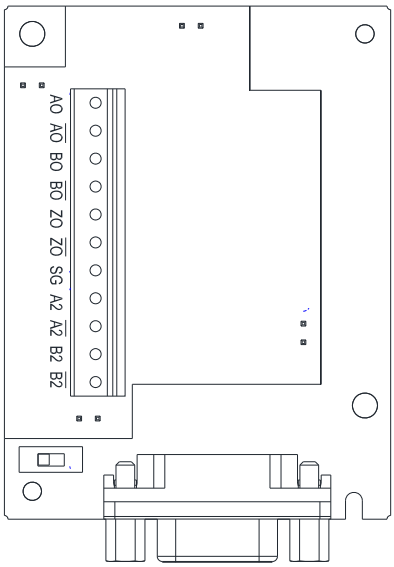

Communication extension card (Slot 1)

CMC-PD01 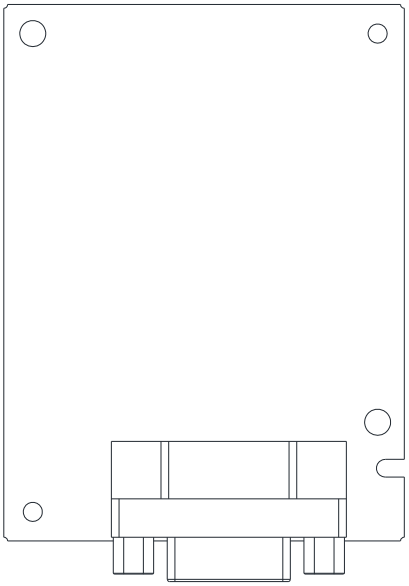	CMC-DN01 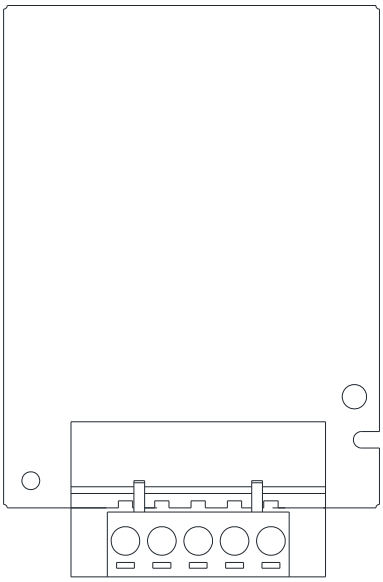
CMC-EIP01 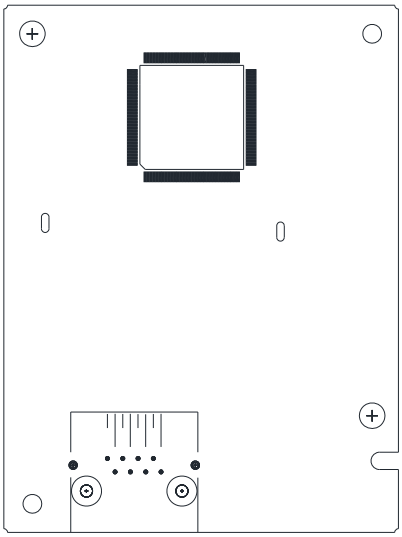	EMC-COP01 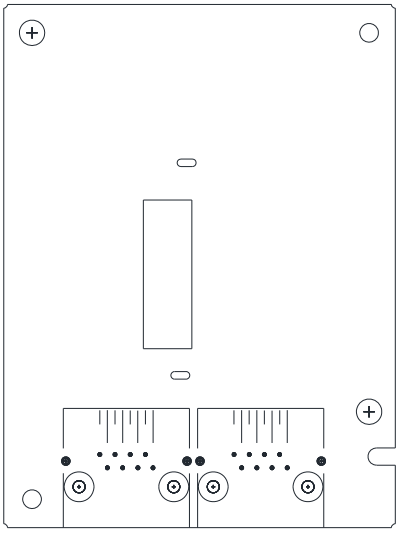
CMC-EC01 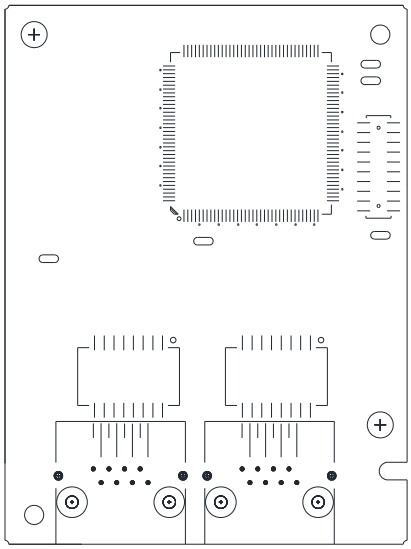	CMC-PN01 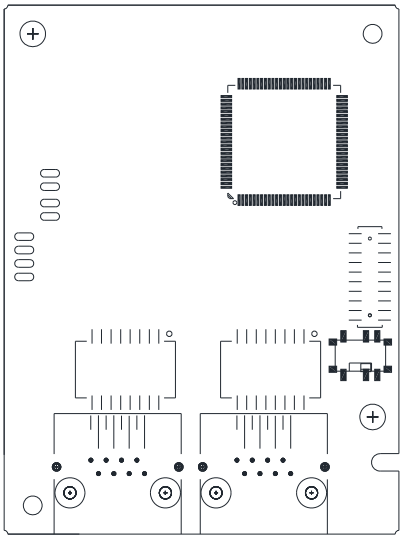

8-1-3 Installation and Disconnection of Extension Card

8-1-3-1 Installation

Communication card: EMC-COP01, CMC-EIP01, CMC-DN01, CMC-PD01, CMC-EC01, CMC-PN01

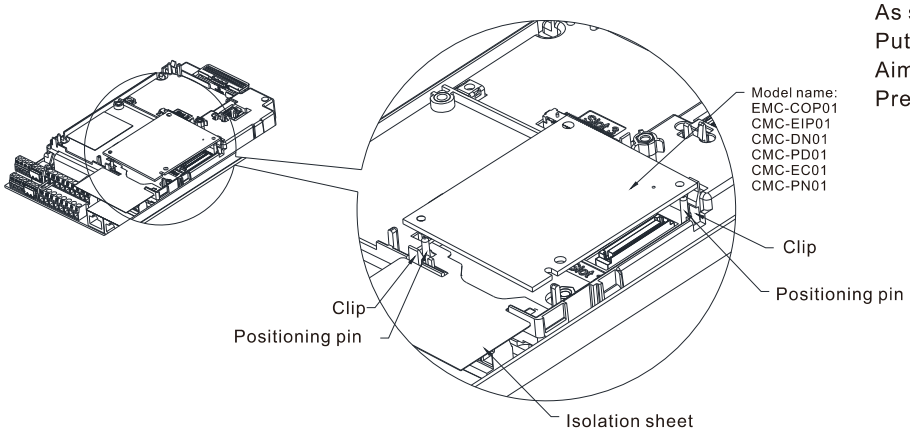

As shown in the figure on the left.
Put the isolation sheet into the positioning pin.
Aim the two holes at the positioning pin.
Press the pin to clip the holes with the PCB.

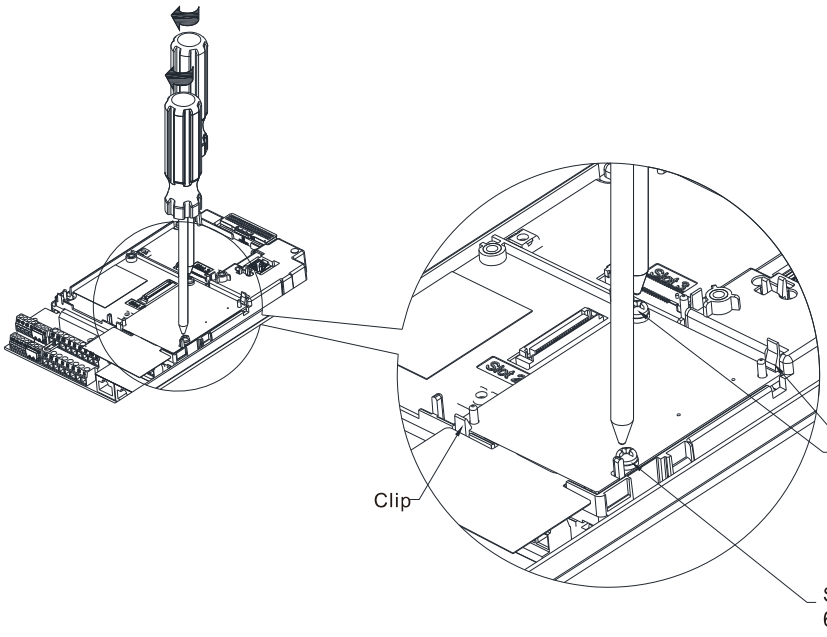

As shown in the figure on the left.
Fasten the screws after the PCB is clipped with the holes.

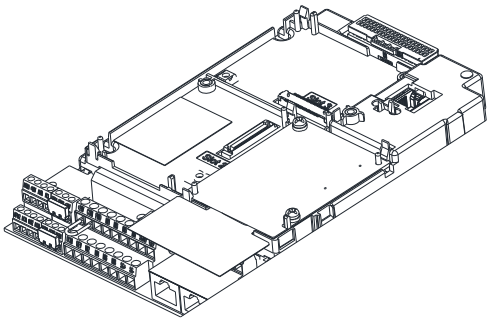

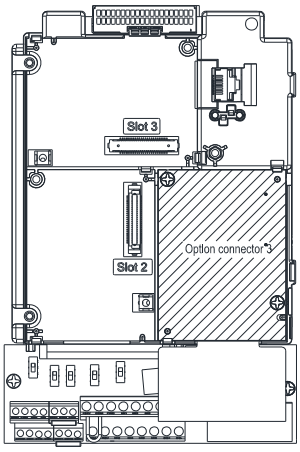

As shown in the figure on the left, installation is completed.

I/O & Relay Card: EMC-D42A, EMC-D611A, EMC-R6AA, EMC-BPS01, EMC-A22A

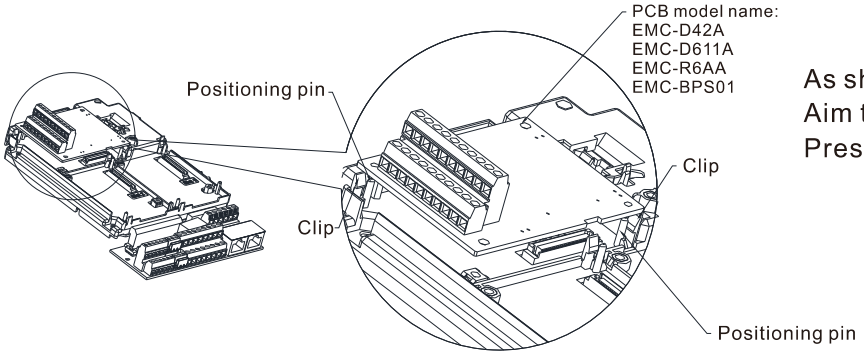

As shown in the figure on the left.
Aim the two holes at the positioning pin.
Press the pin to clip the holes with the PCB.

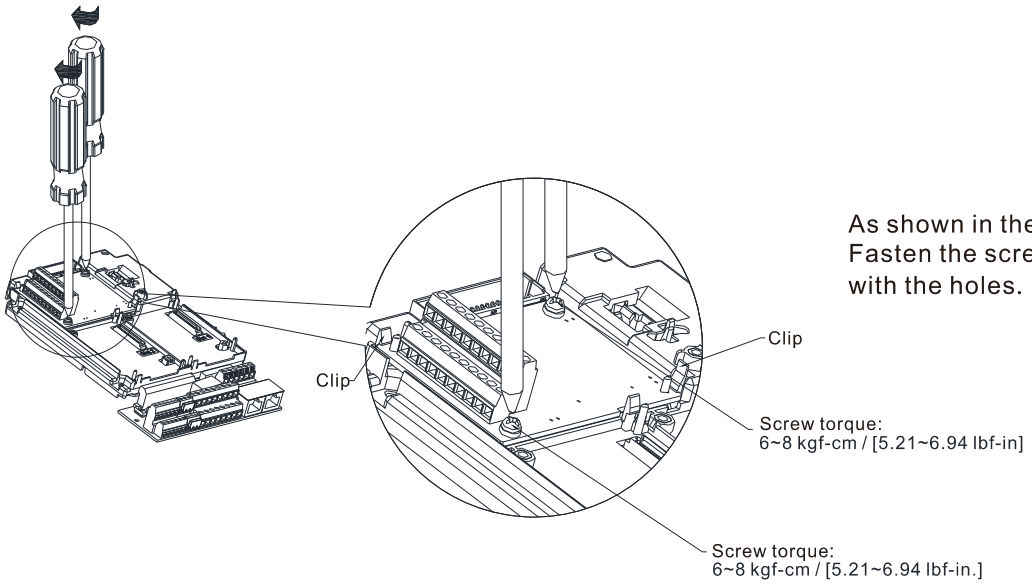

As shown in the figure on the left.
Fasten the screws after the PCB is clipped with the holes.

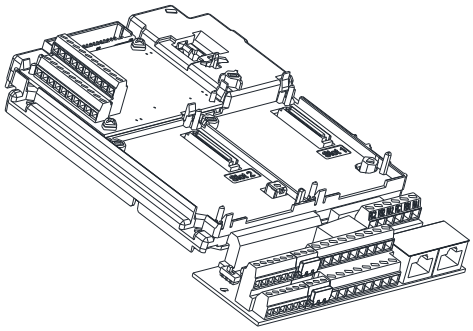

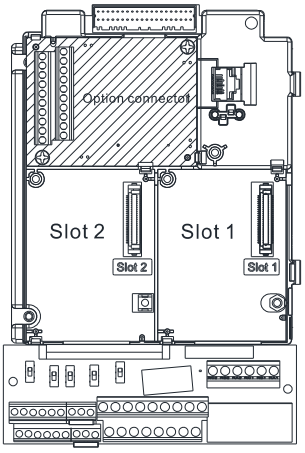

As shown in the figure on the left, installation is completed.

PG Card: EMC-PG01O / EMC-PG02O, EMC-PG01L / EMC-PG02L, EMC-PG01U / EMC-PG02U, EMC-PG01R, EMC-PG01H

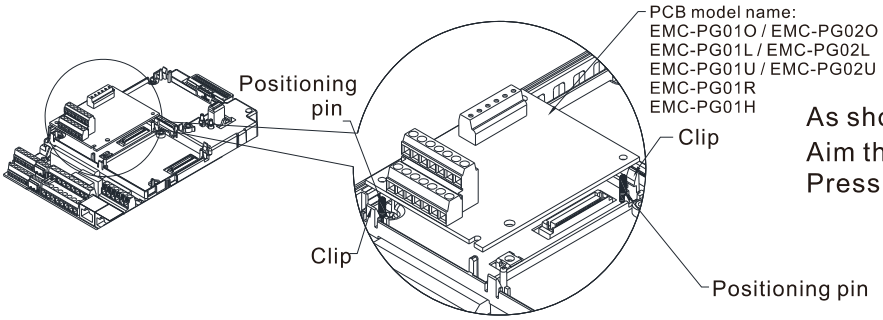

As shown in the figure on the left.
Aim the two holes at the positioning pin.
Press the pin to clip the holes with the PCB.

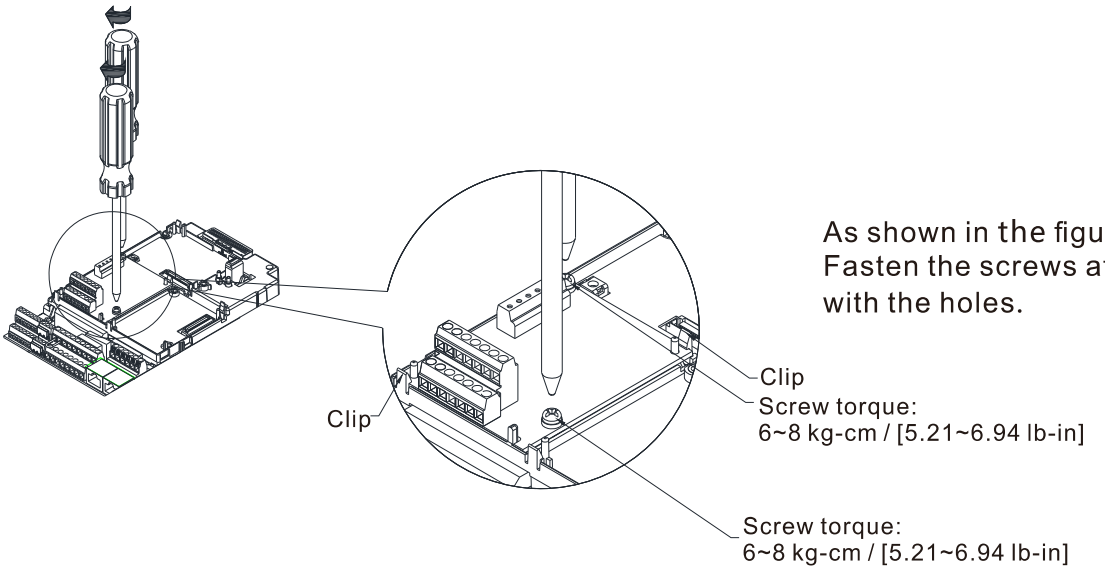

As shown in the figure on the left.
Fasten the screws after PCB is clipped with the holes.

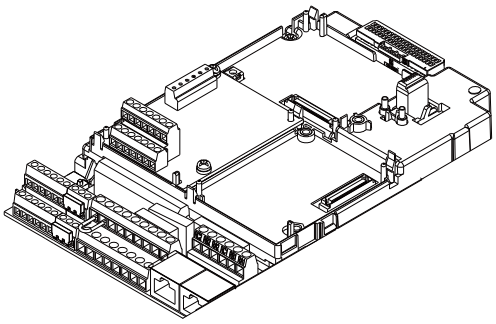

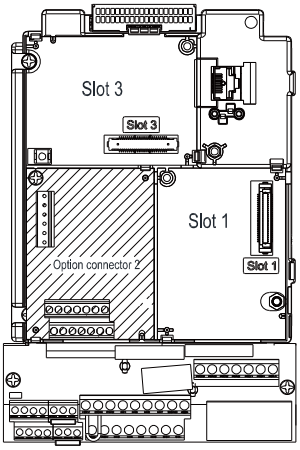

As shown in the figure on the left, installation is completed.

8-1-3-2 Disconnecting the extension card

Communication card: EMC-COP01, CMC-EIP01, CMC-DN01, CMC-PD01, CMC-EC01, CMC-PN01

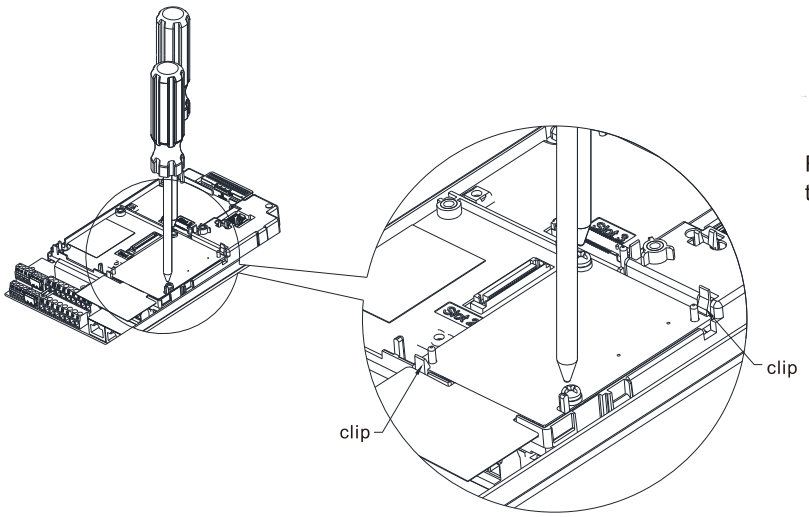

Remove the two screws as shown in the figure on the left.

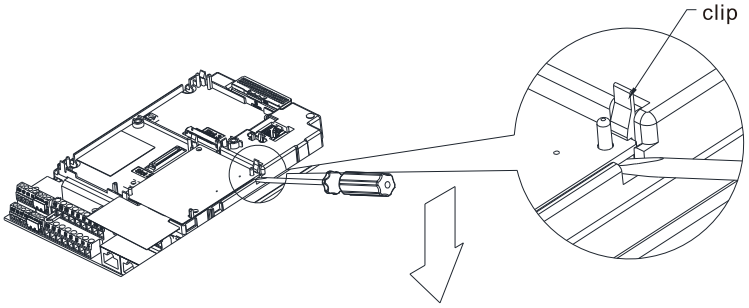

As shown in the figure on the left.
Twist to open the clip.
Insert a slot type screwdriver into the hollow to prize the PCB off the clip.

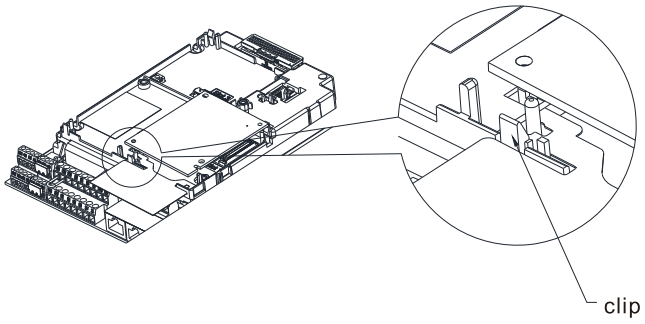

As shown in the figure on the left.
Twist to open the other clip to remove the PCB.

I/O & Relay card: EMC-D42A, EMC-D611A, EMC-R6AA, EMC-BPS01, EMC-A22A

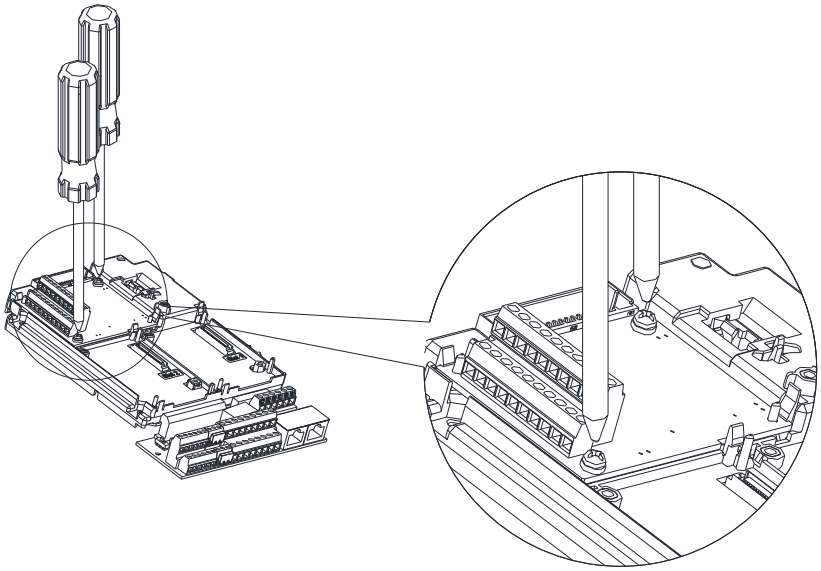

Remove the two screws as shown in the figure on the left.

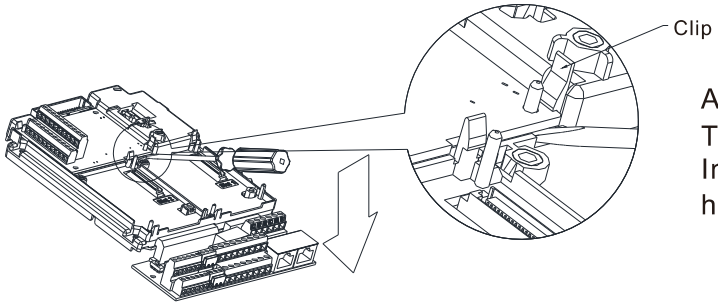

As shown in the figure on the left.
Twist to open the clip.
Insert a slot type screwdriver into the hollow to prize the PCB off the clip.

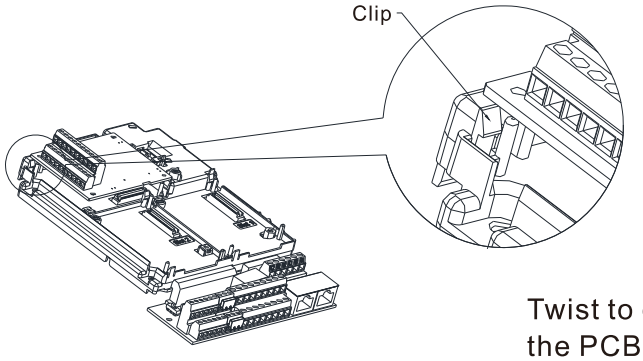

Twist to open the other clip to remove the PCB, as shown in the figure on the left.

PG card: EMC-PG01O / EMC-PG02O, EMC-PG01L / EMC-PG02L, EMC-PG01U / EMC-PG02U, EMC-PG01R, EMC-PG01H

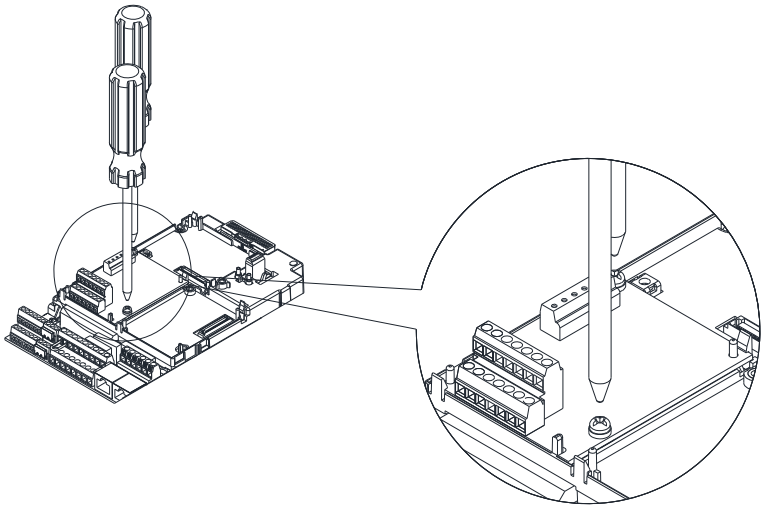

Remove the two screws as shown in the figure on the left.

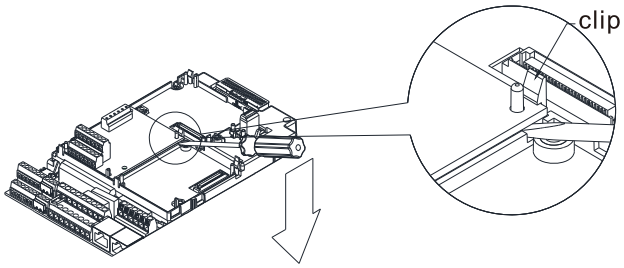

As shown in the figure on the left.
Twist to open the clip.
Insert a slot type screwdriver into the hollow to prize the PCB off the clip.

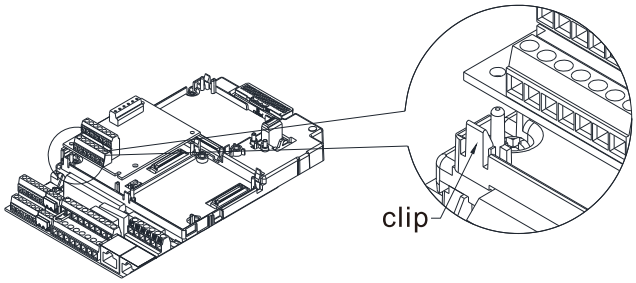

As shown in the figure on the left.
Twist to open the other clip to remove the PCB.

8-2 EMC-D42A -- Extension card for 4-point digital input/ 2-point digital input

	Terminals	Descriptions
I/O Extension Card	COM	Common for Multi-function input terminals Select SINK (NPN) / SOURCE (PNP) in J1 jumper / external power supply
	MI10–MI13	Refer to Pr.02-26–02-29 to program the multi-function inputs MI10–MI13. Internal power is applied from terminal E24: +24 V_{DC} ± 5% 200 mA, 5W External power +24 V_{DC}: max. voltage 30 V_{DC}, min. voltage 19 V_{DC}, 30W ON: the activation current is 6.5 mA OFF: leakage current tolerance is 10 μA
	MO10–MO11	Multi-function output terminals (photocoupler) The AC motor drive releases various monitor signals, such as drive in operation, frequency attained and overload indication, via transistor (open collector). 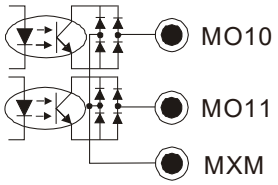
	MXM	Common for multi-function output terminals MO10, MO11 (photocoupler) Max 48 V_{DC} 50 mA

8-3 EMC-D611A -- Extension card for 6-point digital input (110V_{AC} input voltage)

	Terminals	Descriptions
I/O Extension Card	AC	AC power Common for multi-function input terminal (Neutral)
	MI10–MI15	Refer to Pr.02-26–Pr. 02-31 for multi-function input selection Input voltage: 100–130 V_{AC} Input frequency: 47–63 Hz Input impedance: 27 KΩ Terminal response time: ON: 10 ms OFF: 20 ms

8-4 EMC-R6AA -- Relay output extension card (6-point N.O. output contact)

	Terminals	Descriptions
Relay Extension Card	RA10–RA15 RC10–RC15	Refer to Pr.02-36– Pr.02-41 for multi-function output selection Resistive load: 3A (N.O.) / 250 V_{AC} 5A (N.O.) / 30 V_{DC} Inductive load (COS 0.4) 1.2A (N.O.) / 250 V_{AC} 2.0A (N.O.) / 30 V_{DC} It is used to output each monitor signal, such as drive is in operation, frequency attained or overload indication.

8-5 EMC-BPS01 -- +24V power card

	Terminals	Descriptions
External Power Supply	24V GND	Input power: 24 V± 5% Maximum input current: 0.5 A Note: Do not connect drive control terminal GND directly to the EMC-BPS01 input terminal GND.
		Function: When the drive is only powered by EMC-BPS01, the communication can be assured and support all communication cards and following functions: Parameters read and write Keypad can be displayed Keypad button can be operated (except RUN) Analog input is effective Multi-input (FWD, REV, MI1–MI8) needs external power supply to operate Following functions are not supported： Relay output (including extension card), PG card, PLC function

8-6 EMC-A22A -- Extension card for 2-point analog input/ 2-point analog output

8-6-1 Product File

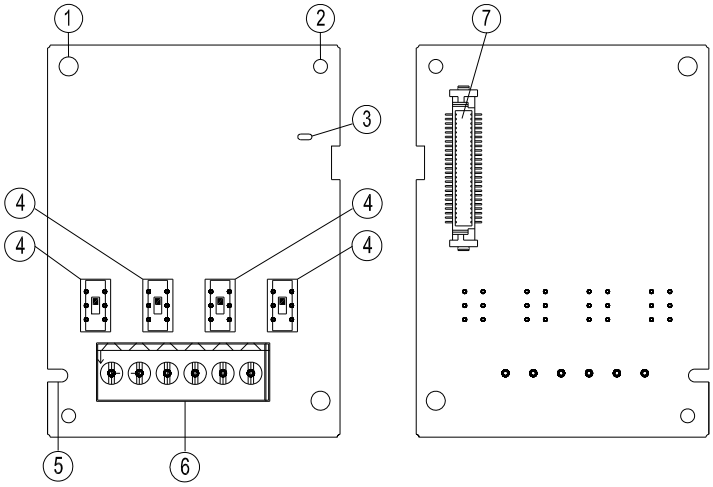

1. Screw fixing hole
2. Positioning hole
3. POWER indicator
4. Switch
5. Fool-proof groove
6. Terminal block
7. AC motor drive connection port

8-6-2 Terminal Specification

	Terminals	Descriptions	
Analog I/O Extension Card	AI10, AI11	Refer to Pr.14-00–Pr.14-01 for function selection (input), and Pr.14-18–Pr.14-19 for mode selection. There are two sets of AI port, SSW3 (AI10) and SSW4 (AI11), which can be switched to Voltage or Current mode. Voltage mode: Input 0–10 V Current mode: Input 0–20 mA / 4–20 mA	
		Analog voltage frequency command 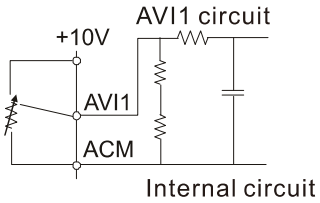 	Impedance: 20 kΩ Range: 0–10 V = 0–Max. Output Frequency (Pr.01-00) Switch: AI10 / AI11 Switch, default 0–10 V
		Analog current frequency command 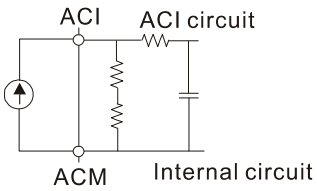 	Impedance: 250 Ω Range: 0–20 mA / 4–20 mA = 0–Max. Output Frequency (Pr.01-00) Switch: AI10 / AI11 Switch, default 0–10 V

	AO10, AO11	Refer to Pr.14-12–Pr.14-13 for function selection (output), and Pr.14-36–Pr.14-37 for mode selection. There are two sets of AO port, SSW1 (AO10) and SSW2 (AO11), which can be switched to Voltage or Current mode. Voltage mode: Output 0–10 V Current mode: Output 0–20 mA / 4–20 mA	
		Multi-function analog output 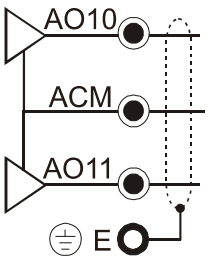 	AVO: 0–10 V Max. output current 2 mA, Max. load 5 kΩ Output current: 2 mA max Resolution: 0–10 V corresponds to Max. operation frequency Switch: AO10 / AO11 Switch, default 0–10 V
			ACO: 0–20 mA Max. Load 500 Ω Output current: 20 mA max Resolution: 0–20 mA / 4–20 mA corresponds to Max. operation frequency Switch: AO10 / AO11 Switch, default 0–10 V
	ACM	Analog Signal Common	Common for analog terminals

8-7 EMC-PG01L / EMC-PG02L -- PG card (Line driver)

8-7-1 Terminal description

Set by Pr.10-00–10-02, Pr.10-16–10-18

Terminals		Descriptions
PG1	VP	Output voltage for power: +5 V / +12 V ± 5% (use FSW3 to switch +5V / +12 V) Max. output current: 200 mA
	DCM	Common for power and signal
	A1, /A1, B1, /B1, Z1, /Z1	Encoder input signal (Line Driver or Open Collector) Open Collector input voltage: +5 – +24V (Note 1) It can be single-phase or two-phase input. EMC-PG01L: Max. input frequency: 300 kHz EMC-PG02L: Max. input frequency: 30 kHz (Note 2)
PG2	A2, /A2, B2, /B2	Pulse Input signal (Line Driver or Open Collector) Open Collector input voltage: +5 – +24V (Note1) It can be single-phase or two-phase input. EMC-PG01L: Max. input frequency: 300 kHz EMC-PG02L: Max. input frequency: 30 kHz (Note 2)
PG OUT	AO, /AO, BO, /BO, ZO, /ZO, SG	PG Card Output signals. It has division frequency function: 1–255 times Max. output voltage for Line driver: 5 V_{DC} Max. output current: 15 mA EMC-PG01L Max. output frequency: 300 kHz EMC-PG02L Max. output frequency: 30 kHz SG is the GND of PG card. It is also the GND of position machine or PLC to make the output signal to be the common pivot point.

Note 1: Open Collector application, input current 5–15 mA to each set then each set needs one pull-up resistor. If input voltage of open collector is 24 V, the power of encoder needs to be connected externally. Please refer to diagram 2 of PG1.

5V	Recommended pull-up resistor: above 100–220 Ω, 1/2W
12V	Recommended pull-up resistor: above 510Ω–1.35 kΩ, 1/2W
24V	Recommended pull-up resistor: above 1.8k–3.3 kΩ, 1/2W

Note 2: If the required bandwidth is not over 30 kHz at the application, it is recommended to use EMC-PG02O/L (bandwidth 30 kHz) to avoid interference.

PG1 card wiring diagram (the image 1 and 2 below are wiring diagrams of Open Collector encoder)

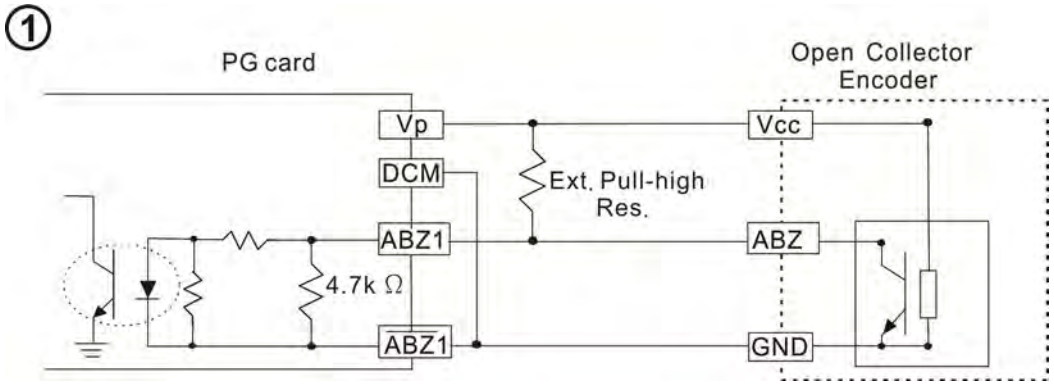

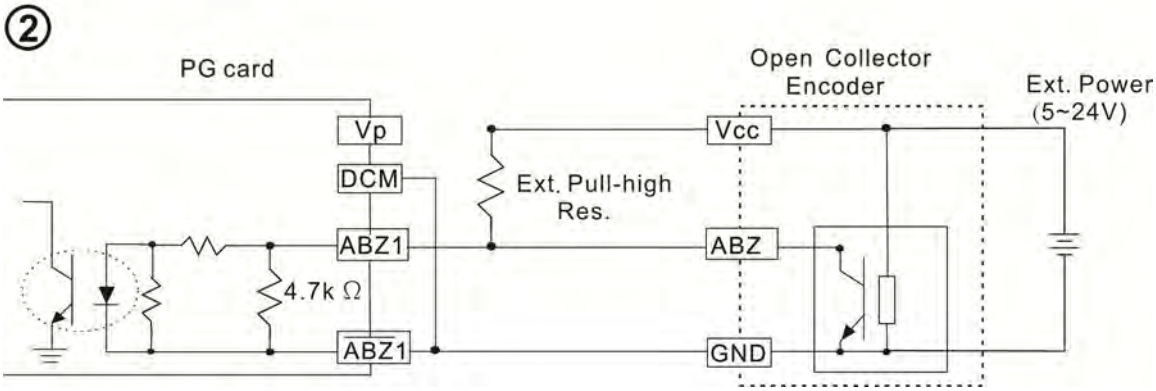

PG2 Wiring Diagram

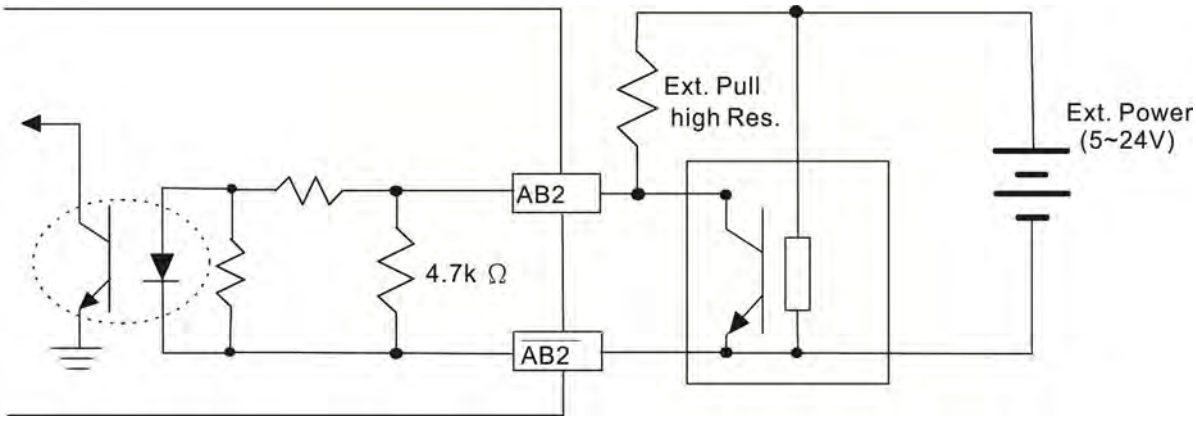

8-7-2 EMC-PG01L / EMC-PG02L Wiring Diagram

- ☑ Use a shielded cable to prevent interference. Do not run control wires parallel to any high voltage AC power line (200 V_{AC} and above).
- ☑ Recommended wire size: 0.2–0.75 mm^2 [24–18 AWG].
- ☑ Cable length: Single-phase input, less than 30m / two-phase input, less than 100 m

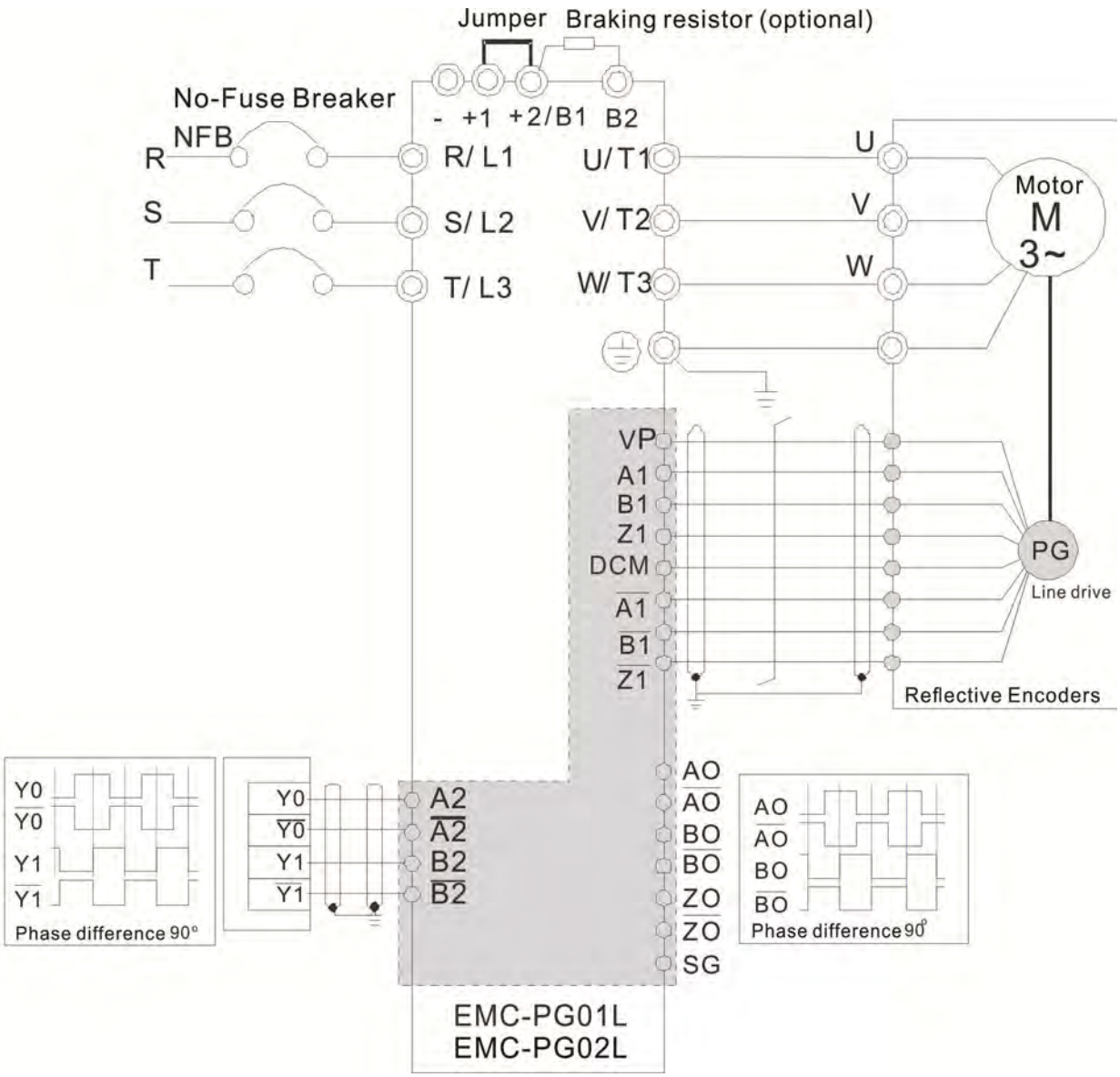

8-8 EMC-PG01O / EMC-PG02O -- PG card (Open collector)

8-8-1 Terminal descriptions

Set by Pr.10-00–10-02, Pr.10-16–10-18

Terminals		Descriptions
PG1	VP	Output voltage for power: +5V/+12V±5% (use FSW3 to switch +5V/+12V) Max. output current: 200 mA
	DCM	Common for power and signal
	A1, /A1, B1, /B1, Z1, /Z1	Encoder Input signal (Line Driver or Open Collector) Open Collector Input Voltage: +5V – +24V (Note 1) It can be single-phase or two-phase input. EMC-PG01O Max. input frequency: 300 kHz EMC-PG02O Max. input frequency: 30 kHz (Note 2)
PG2	A2, /A2, B2, /B2	Pulse Input Signal (Line Driver or Open Collector) Open Collector Input Voltage: +5 – +24V (Note 1) It can be single-phase or two-phase input. EMC-PG01O Max. input frequency: 300 kHz EMC-PG02O Max. input frequency: 30 kHz (Note 2)
PG OUT	V+, V+	Needs external power source for PG OUT circuit. Input voltage of power: +7V – +24V
	V-	Input voltage for the negative side
	A/O, B/O, Z/O	PG Card Output signals has division frequency function: 1–255 times. On the open collector's output signal, add a high-pull resistor on the external power V+ – V- (e.g. power of PLC) to prevent the interference of the receiving signal. Max. [Three pull-up resistor are included in the package (1.8 kΩ / 1W)] (Note 1) EMC-PG01O Max. input frequency: 300 kHz EMC-PG02O Max. input frequency: 30 kHz (Note 2)

Note 1: Open Collector application, input current 5–15mA to each set then each set needs one pull-up resistor. If input voltage of open collector is 24V, the power of encoder needs to be connected externally. Please refer to diagram 2 of PG1.

5V	Recommended pull-up resistor: above 100–220 Ω, 1/2W
12V	Recommended pull-up resistor: above 510Ω–1.35 kΩ, 1/2W
24V	Recommended pull-up resistor: above 1.8k–3.3 kΩ, 1/2W

Note 2: If the required bandwidth is not over 30 kHz at the application, it is recommended to use EMC-PG02O/L (bandwidth 30 kHz) to avoid interference.

PG1 card wiring diagram (the image 1 and 2 below are wiring diagrams of Open Collector encoder)

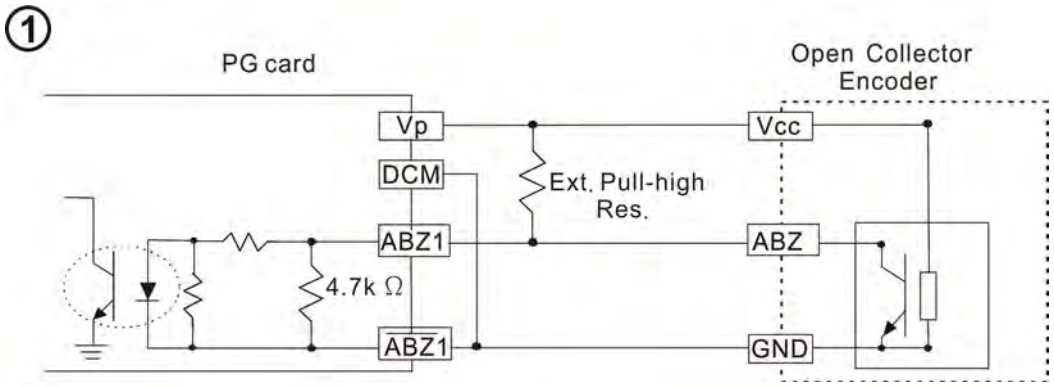

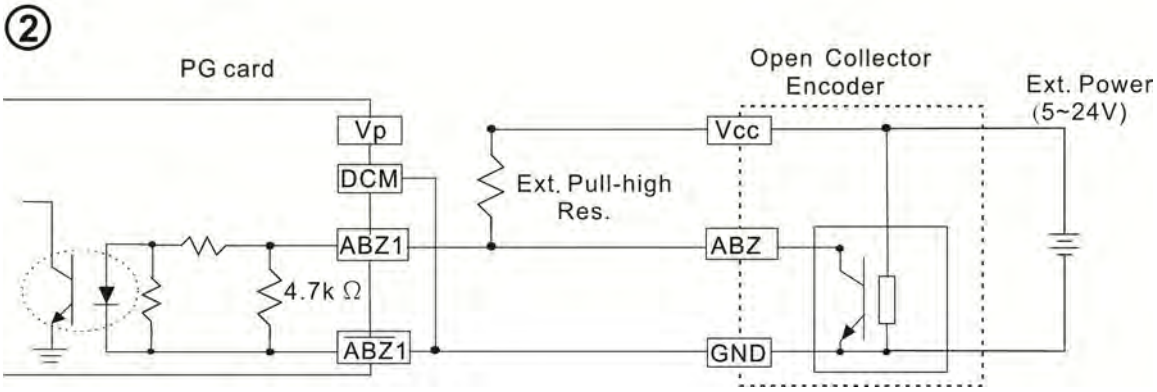

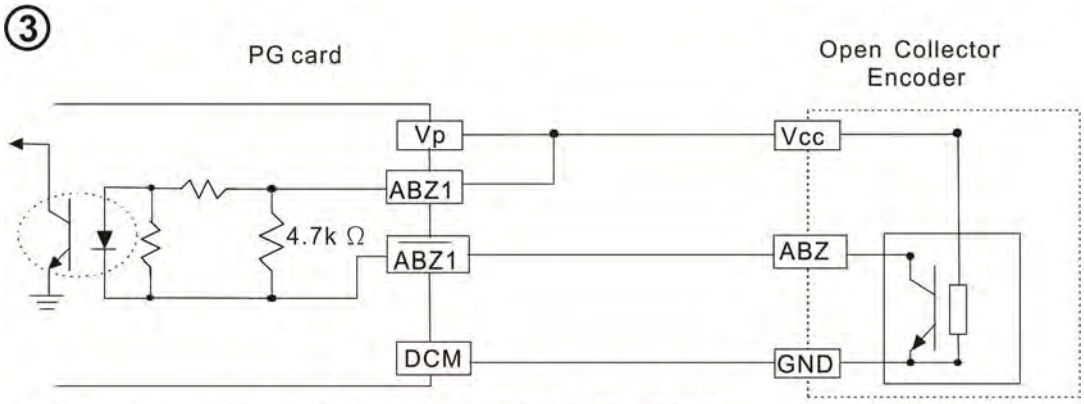

When wiring in this way, if there is a signal on EMC-PG01O's A1, B1 and Z1, LED lights is OFF.

If A1, B1 and Z1 have no signals, LED lights is ON.

PG2 Wiring Diagram

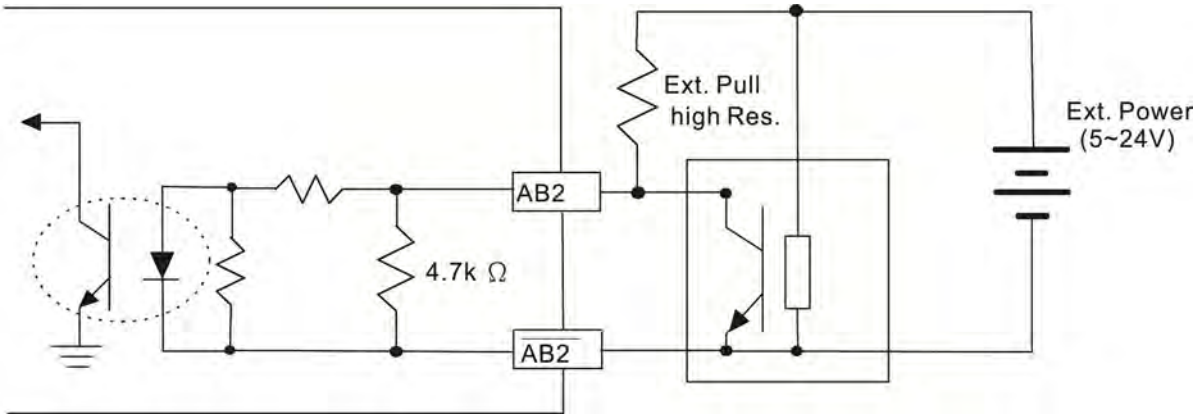

8-8-2 EMC-PG01O / EMC-PG02O Wiring Diagram

- ☑ Use a shielded cable to prevent interference. Do not run control wires parallel to any high voltage AC power line (200 V_{AC} and above).
- ☑ Recommended wire size 0.2–0.75 mm^2 [24–18 AWG].
- ☑ Cable length: Single-phase input, less than 30m / two-phase input, less than 100 m

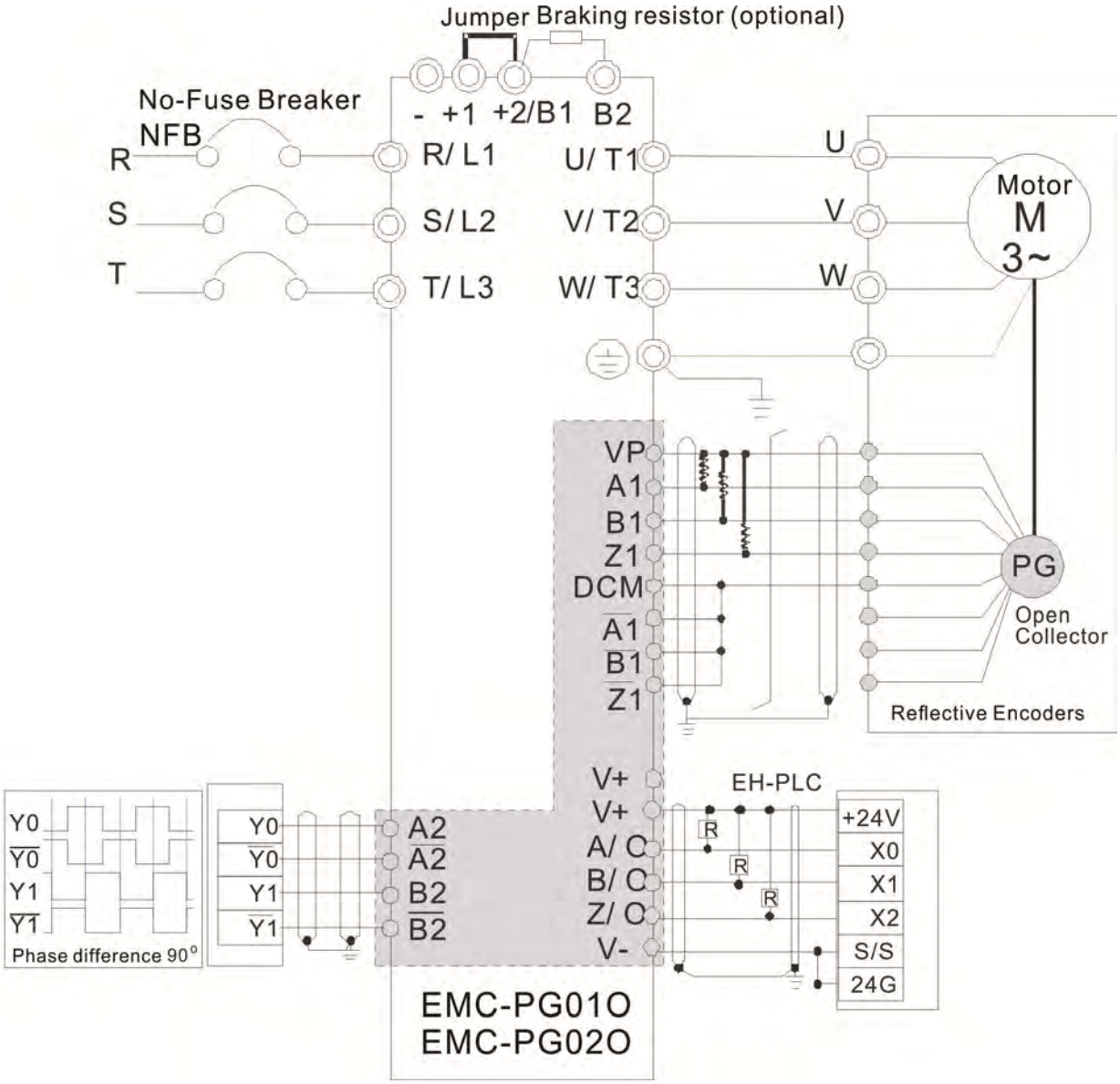

8-9 EMC-PG01U / EMC-PG02U

-- PG card (ABZ Incremental encoder signal/ UVW Hall position signal input)

1. FSW1 S: Standard UVW Output Encoder; D: Delta Encoder
2. When using the Delta Encoder, wait for at least 250 ms after powering up to receive signals from UVW. If a running command is received before UVW signals finish, a PGF5 error message will be given. So wait for 250 ms before sending a running command.
3. EMC-PG02U has encoder disconnection detection function.

8-9-1 Terminal descriptions

Set by Pr.10-00–10-02, Pr.10-16–10-18

Terminals		Descriptions
PG1	VP	Output voltage for power: +5V / +12V ± 5% (use FSW3 to switch +5V / +12V) Max. output current: 200 mA
	DCM	Common for power and signal
	A1, /A1, B1, /B1, Z1, /Z1	Encoder input signal (Line Driver) It can be single-phase or two-phase input. Max. output frequency: 300 kHz
	U1, /U1, V1, /V1, W1, /W1	Encoder input signal
PG2	A2, /A2, B2, /B2	Pulse Input signal (Line Driver or Open Collector) Open Collector Input Voltage: +5 – +24V (Note1) It can be single-phase or two-phase input. Max. output frequency: 300 kHz.
PG OUT	AO, /AO, BO, /BO, ZO, /ZO, SG	PG Card Output signals. It has division frequency function: 1–255 times Max. output voltage for Line driver: 5 V_{DC} Max. output current: 15 mA Max. output frequency: 300 kHz SG is the GND of PG card. It is also the GND of position machine or PLC to make the output signal to be the common pivot point.

Note 1: Open Collector application, input current 5–15 mA to each set then each set needs one pull-up resistor.

5V	Recommended pull-up resistor: above100–220 Ω, 1/2W
12V	Recommended pull-up resistor: above 510Ω–1.35 kΩ, 1/2W
24V	Recommended pull-up resistor: above1.8k–3.3 kΩ, 1/2W

PG2 Wiring Diagram

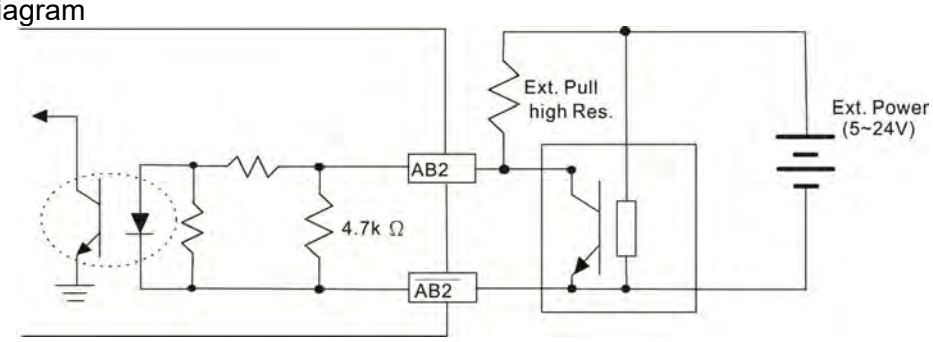

8-9-2 EMC-PG01U / EMC-PG02U Wiring Diagram

- ☑ Use a shielded cable to prevent interference. Do not run control wires parallel to any high voltage AC power line (200 V_{AC} and above).
- ☑ Recommended wire size 0.2–0.75 mm^2 [24–18 AWG].
- ☑ Cable length: Single-phase input, less than 30 m / two-phase input, less than 100 m

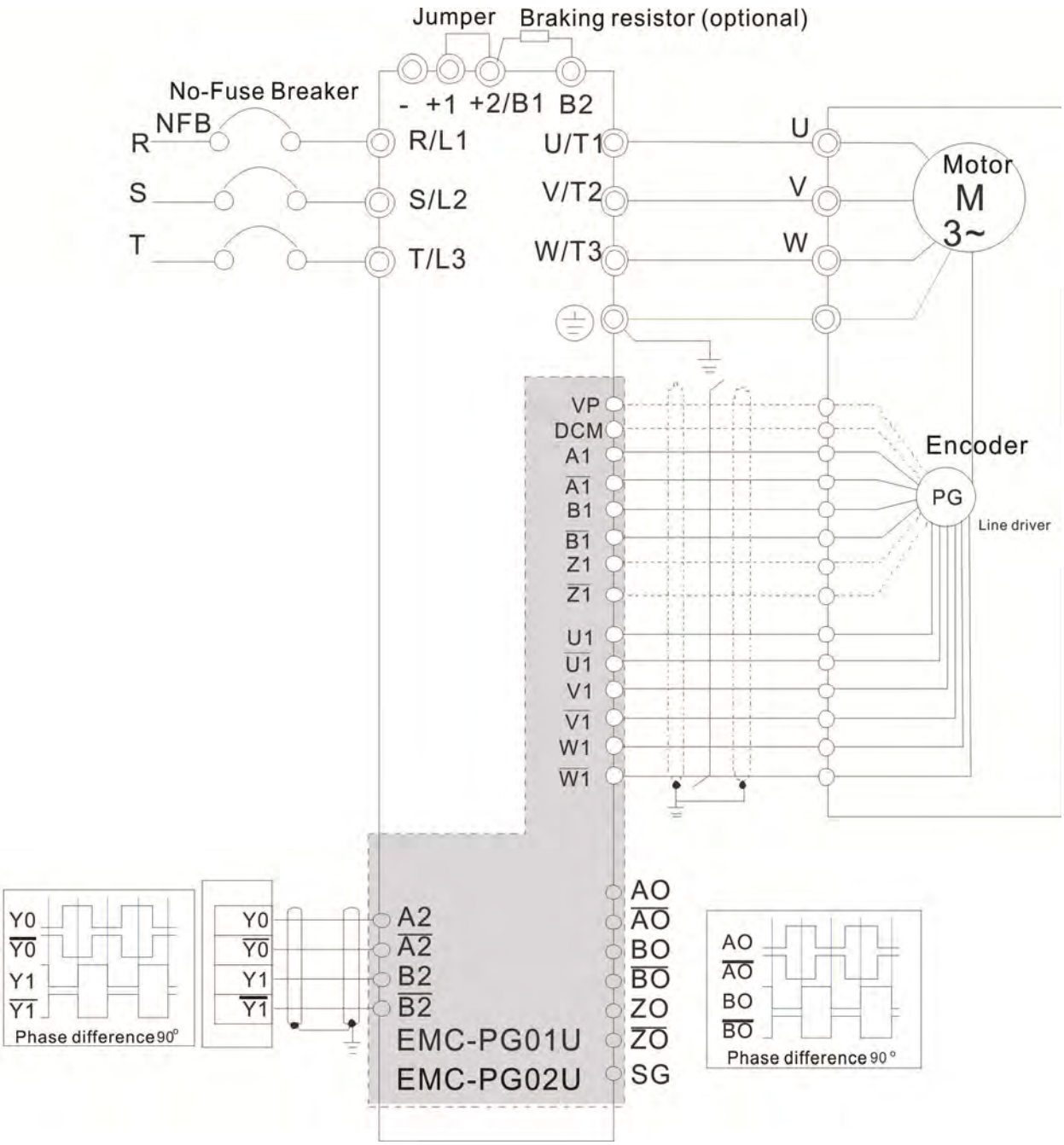

8-10 EMC-PG01R -- PG card (Resolver)

8-10-1 Terminal Descriptions

Set by Pr.10-00–10-02 and Pr.10-30 Resolver. (Pr.10-00=3, Pr.10-01=1024)

Terminals		Descriptions
PG1	R1- R2	Resolver Output Power 7 Vrms, 10 kHz
	S1, /S3, S2, /S4,	Resolver Input Signal (S2, /S4=Sin; S1, /S3=Cos) 3.5±0.175 Vrms, 10 kHz
PG2	A2, /A2, B2, /B2	Pulse Input signal (Line Driver or Open Collector) Open Collector Input Voltage: +5 – +24V (Note1) It can be single-phase or two-phase input. Max. output frequency: 300 kHz
PG OUT	AO, /AO, BO, /BO, ZO, /ZO, SG,	PG Card Output signals. It has division frequency function: 1–255 times Max. output voltage for Line driver: 5 V_{DC} Max. output current: 15 mA Max. output frequency: 300 kHz SG is the GND of PG card. It is also the GND of position machine or PLC to make the output signal to be the common pivot point.

Note 1: Open Collector application, input current 5–15 mA to each set then each set needs one pull-up resistor.

5V	Recommended pull-up resistor: above 100–220 Ω, 1/2W
12V	Recommended pull-up resistor: above 510Ω–1.35 kΩ, 1/2W
24V	Recommended pull-up resistor: above 1.8k–3.3 kΩ, 1/2W

PG2 Wiring Diagram

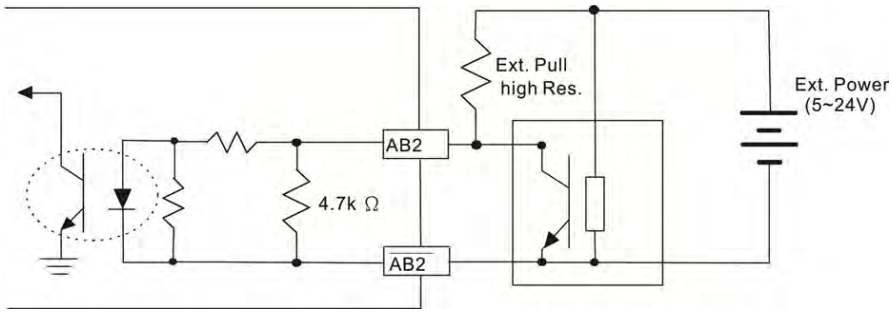

- DOS (Degradation of Signal) : If the amplitude of the sine wave input of the S1-/S3/ S2-/S4 is lower than or higher than the encoder IC's specification, a red light will be on. The possible reasons which cause this problem are the following.
  1. The turns ratio of the resolver encoder is not 1:0.5 which makes the sine wave input of the S1-/S3/S2-/S4 not equal to 3.5±0.175 Vrms.
  2. While motor is running, motor creates common mode noise which makes accumulated voltage to be more than 3.5±0.175 Vrms
- LOT (Loss of Tracking): Compare the angle of S1-/S3/S2-/S4 sine wave input to the R1-R2 cosine wave. If their difference is more than 5 degree, a red light will be on. Here are the possible reasons why that happens:
  1. The output frequency of the PG card is incorrect.
  2. The specification of Resolver's encoder is not 10 kHz
  3. The motor creates common mode noise while it is running. That causes a big difference, while the motor is rotating, between main winding's cosine wave angle and the sine wave angle of second and third windings.

8-10-2 EMC-PG01R Wiring Diagram

- ☑ Use a shielded cable to prevent interference. Do not run control wires parallel to any high voltage AC power line (200 V_{AC} and above).
- ☑ Recommended wire size 0.2–0.75 mm^2 [24–18 AWG].
- ☑ Cable length: PG1 input, less than 30m; PG2 single-phase input, less than 30 m / two-phase input, less than 100 m

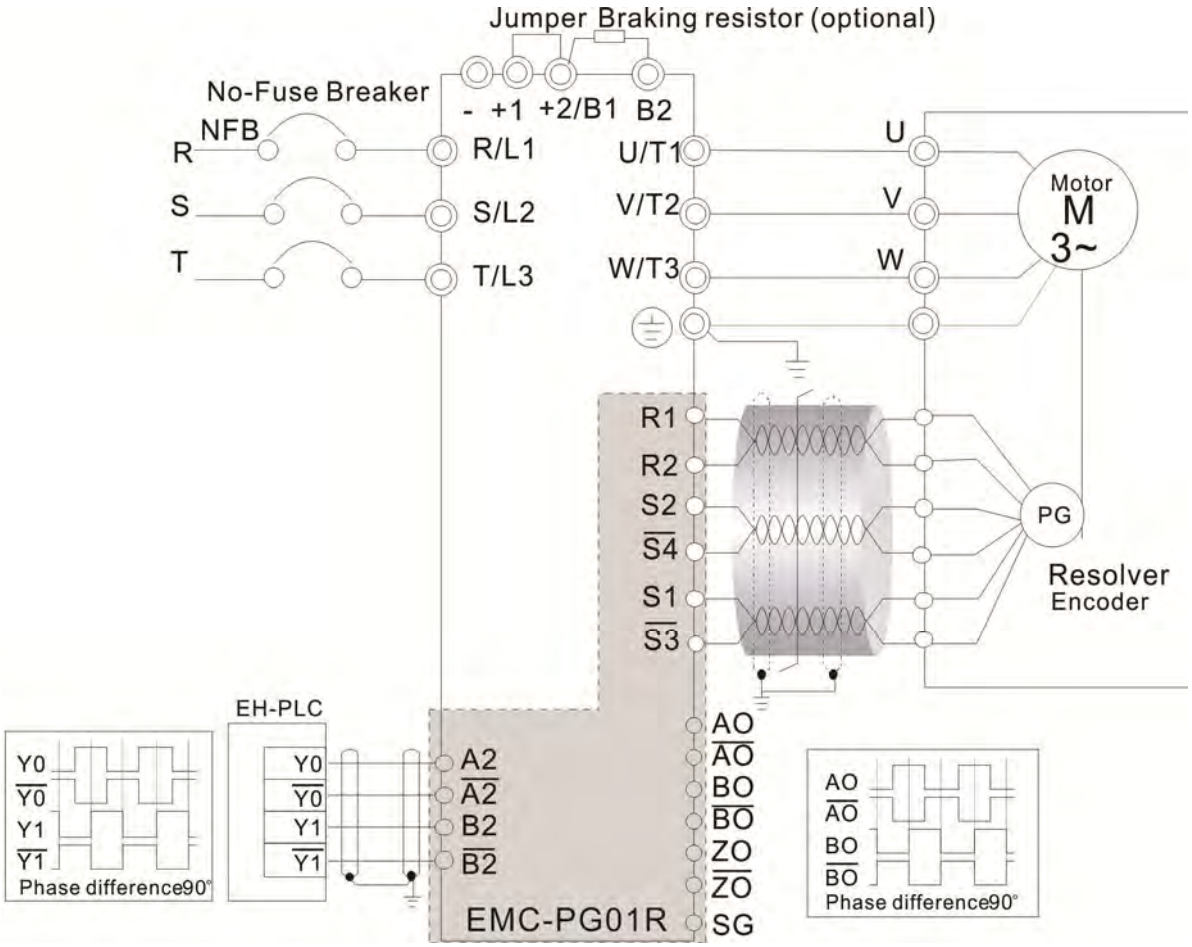

8-11 EMC-PG01H – PG card (Resolver)

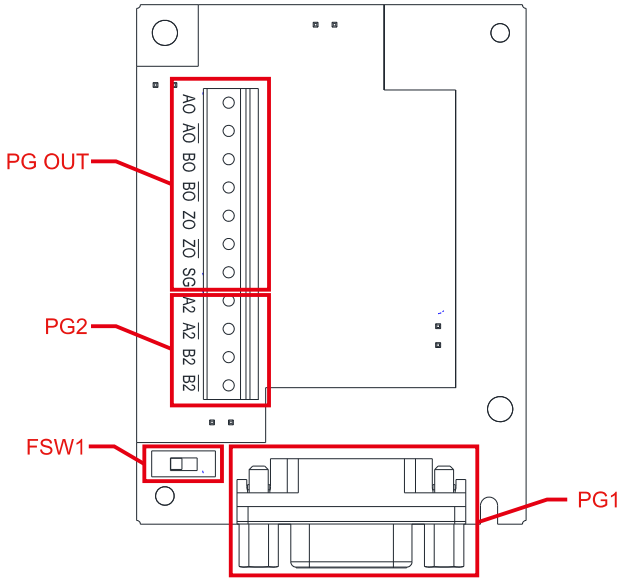

1. The PG1 at input side is SinCos signal of 1 Vpp, and the bandwidth is 600 kHz.
2. The principle of operation for a SinCos encoder is similar to a square-wave encoder, but use SinCos signal instead.
3. The pulse unit of SinCos encoder is ppr, 1024 ppr means 1024 SinCos signals per revolution with single phase.

8-11-1 Terminal Descriptions

Set by Pr.10-00–10-03 and Pr.10-16–10-18.

Terminals		Descriptions	
PG1	VP	Power output voltage: +5V / +8V ± 5% (+5V / +8V decided by FSW1) Max. output current: 200 mA	
	DCM	Digital control / Frequency signal common	
	A+, A-, B+, B-, R+, R-	Encoder wave difference signal input (Incremental signal) Max. output frequency: 600 kHz	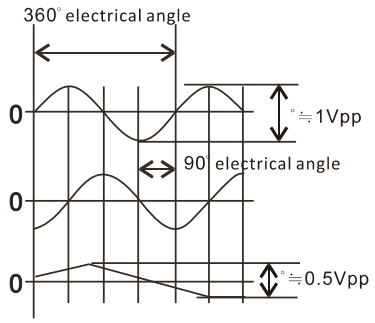
	C+, C-, D+, D-	Encoder wave difference signal input (Absolute signal)	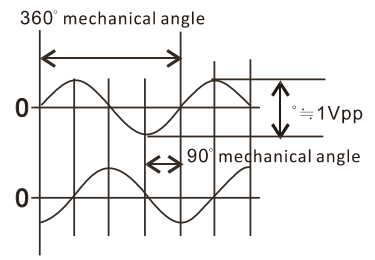
PG2	A2, /A2, B2, /B2	Pulse Input signal (Line Driver or Open Collector) Open Collector Input Voltage: +5 – +24V (Note1) It can be single-phase or two-phase input. Max. output frequency: 300 kHz	

PG OUT	AO, /AO, BO, /BO, ZO, /ZO, SG	PG Card Output signals. It has division frequency function: 1–255 times Max. output voltage for Line driver: 5 V_{DC} Max. output current: 15 mA Max. output frequency: 600 kHz ± 5% SG is the GND of PG card. It is also the GND of position machine or PLC to make the output signal to be the common pivot point.
FSW1		Use FSW1 to switch the power of VP: +5V / +8V +8V +5V

Note 1: Open Collector application, input current 5–15 mA to each set then each set needs one pull-up resistor. If input voltage of open collector is 24V, the power of encoder needs to be connected externally. Please refer to diagram 2 of PG2.

5V	Recommended pull-up resistor: above 100–220 Ω, 1/2W
12V	Recommended pull-up resistor: above 510Ω–1.35 kΩ, 1/2W
24V	Recommended pull-up resistor: above 1.8k–3.3 kΩ, 1/2W

PG1 Terminal descriptions (15pin D-SUB female connector)

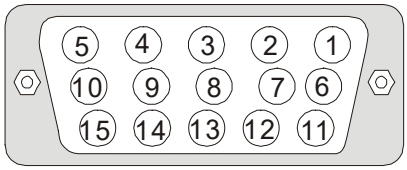

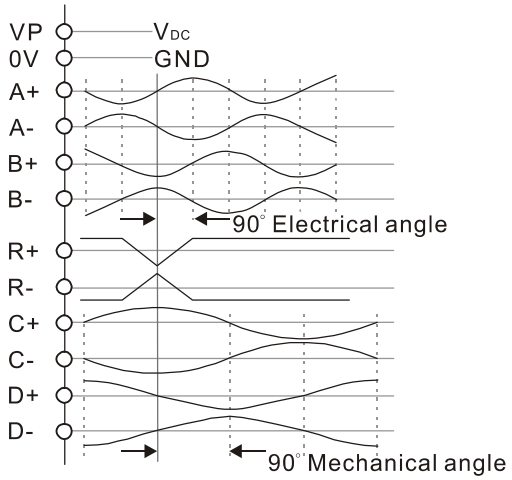

No.	Terminals	No.	Terminals
1	B-	9	VP
2	NC	10	C+
3	R+	11	C-
4	R-	12	D+
5	A+	13	D-
6	A-	14	NC
7	DCM	15	NC
8	B+		

PG2 wiring diagram

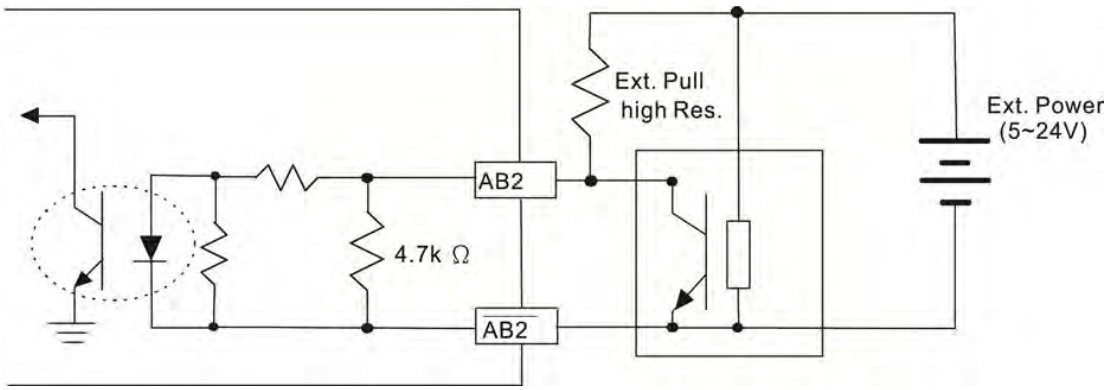

8-11-2 EMC-PG01H Wiring Diagram

- ☑ Use a shielded cable to prevent interference. Do not run control wires parallel to any high voltage AC power line (200 V_{AC} and above).
- ☑ Recommended wire size 0.2–0.75 mm^2 [24–18 AWG].
- ☑ Cable length: PG1 input, less than 10 m; PG2 single-phase input, less than 30 m / two-phase input, less than 100 m

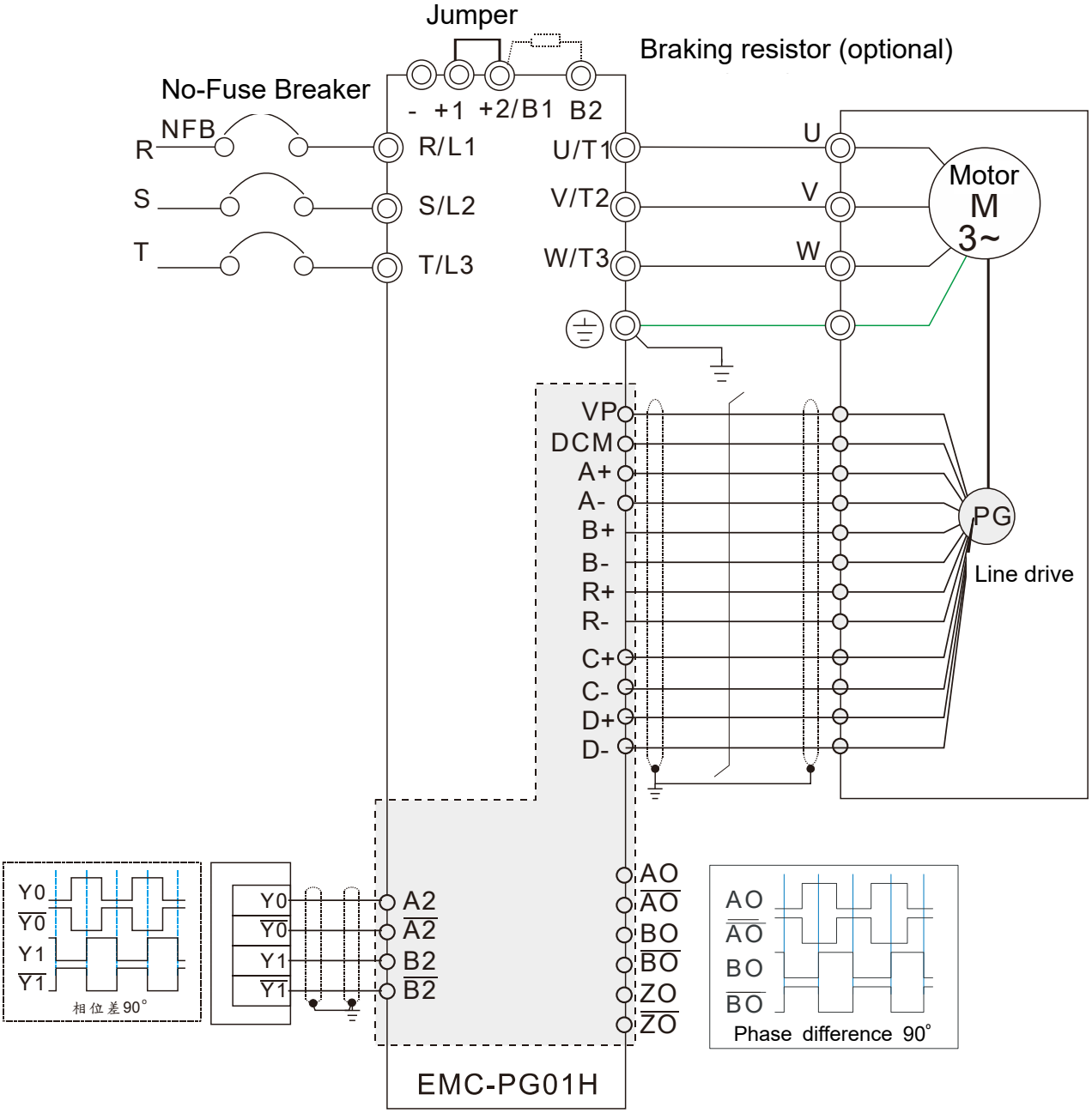

8-12 CMC-PD01 -- Communication card, PROFIBUS DP

8-12-1 Features

1. Supports PZD control data exchange.
2. Supports PKW access AC motor drive parameters.
3. Supports user diagnosis function.
4. Auto-detects baud rates; supports a Max. 12 Mbps.

8-12-2 Product Profile

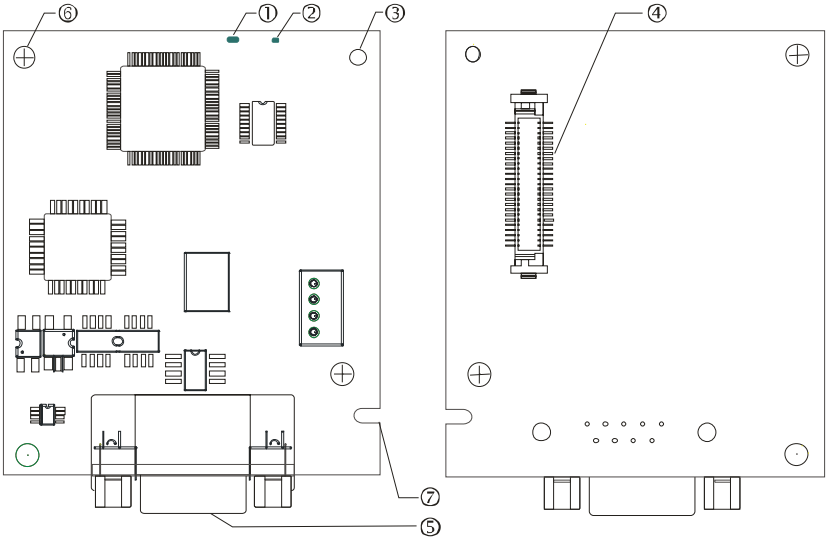

1. NET indicator
2. POWER indicator
3. Positioning hole
4. AC motor drive connection port
5. PROFIBUS DP connection port
6. Screw fixing hole
7. Fool-proof groove

8-12-3 Specifications

PROFIBUS DP Connector

Interface	DB9 connector
Transmission method	High-speed RS-485
Transmission cable	Shielded twisted pair cable
Electrical isolation	500 V_{DC}

Communication

Message type	Cyclic data exchange
Module name	CMC-PD01
GSD document	DELA08DB.GSD
Company ID	08DB (HEX)
Serial transmission speed supported (auto-detection)	9.6 Kbps; 19.2 Kbps; 93.75 Kbps; 187.5 Kbps; 500 Kbps; 1.5 Mbps; 3 Mbps; 6 Mbps; 12 Mbps (bit per second)

Electrical Specification

Power supply voltage	5 V_{DC} (supplied by the AC motor drive)
Insulation voltage	500 V_{DC}
Power consumption	1 W
Weight	28 g

Environment

Noise immunity	ESD (IEC 61800-5-1, IEC 61000-4-2) EFT (IEC 61800-5-1, IEC 61000-4-4) Surge Teat (IEC 61800-5-1, IEC 61000-4-5) Conducted Susceptibility Test (IEC 61800-5-1, IEC 61000-4-6)
Operation /storage	Operation: -10ºC – 50ºC (temperature), 90% (humidity) Storage: -25ºC – 70ºC (temperature), 95% (humidity)
Shock / vibration resistance	International standards: IEC61131-2, IEC60068-2-6 (TEST Fc) / IEC61131-2 & IEC 60068-2-27 (TEST Ea)

8-12-4 Installation

PROFIBUS DP Connector

PIN	Signal	Definition
1	-	Not defined
2	-	Not defined
3	Rxd/Txd-P	Sending / receiving data P(B)
4	-	Not defined
5	DGND	Data reference ground
6	VP	Power voltage – positive
7	-	Not defined
8	Rxd/Txd-N	Sending/receiving data N(A)
9	-	Not defined

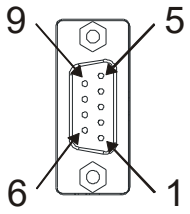

8-12-5 LED Indicator & Troubleshooting

There are 2 LED indicators on CMC-PD01: POWER LED and NET LED. POWER LED displays the status of the working power. NET LED displays the connection status of the communication.

POWER LED

LED status	Indication	Corrective Action
Green light on	Power supply in normal status.	--
Off	No power	Check if the connection between CMC-PD01 and AC motor drive is normal.

NET LED

LED status	Indication	Corrective Action
Green light on	Normal status	--
Red light on	CMC-PD01 is not connected to PROFIBUS DP bus.	Connect CMC-PD01 to PROFIBUS DP bus.
Red light flashes	Invalid PROFIBUS communication address	Set the PROFIBUS address of CMC-PD01 between 1 – 125 (decimal)
Orange light flashes	CMC-PD01 fails to communication with the AC motor drive.	Switch off the power and check whether CMC-PD01 is correctly and normally connected to AC motor drive.

8-13 CMC-DN01 -- Communication card, DeviceNet

8-13-1 Functions

1. Based on the high-speed communication interface of Delta HSSP protocol, able to conduct immediate control to AC motor drive.
2. Supports Group 2 only connection and polling I/O data exchange.
3. For I/O mapping, supports Max. 32 words of input and 32 words of output.
4. Supports EDS file configuration in DeviceNet configuration software.
5. Supports all baud rates on DeviceNet bus: 125 Kbps, 250 Kbps, 500 Kbps and extendable serial transmission speed mode.
6. Node address and serial transmission speed can be set up on AC motor drive.
7. Power supplied from AC motor drive.

8-13-2 Product Profile

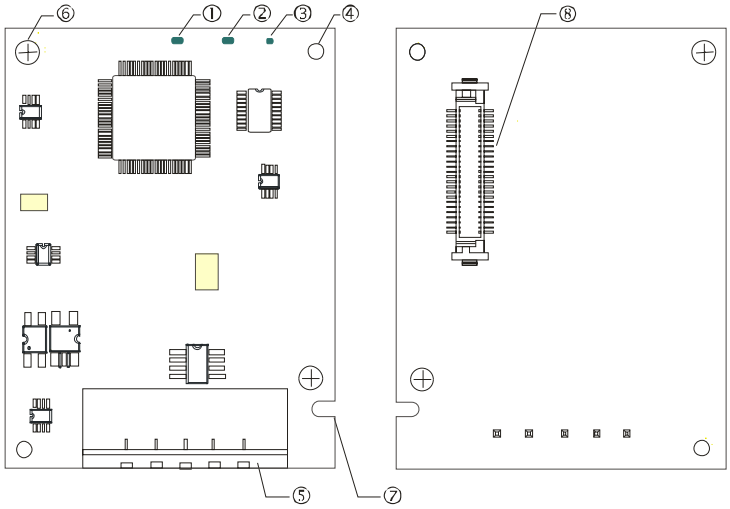

1. NS indicator
2. MS indicator
3. POWER indicator
4. Positioning hole
5. DeviceNet connection port
6. Screw fixing hole
7. Fool-proof groove
8. AC motor drive connection port

8-13-3 Specifications

DeviceNet Connector

Interface	5-PIN open removable connector of 5.08 mm PIN interval
Transmission method	CAN
Transmission cable	Shielded twisted pair cable (with 2 power cables)
Transmission speed	125 Kbps, 250 Kbps, 500 Kbps and extendable serial transmission speed mode
Network protocol	DeviceNet protocol

AC Motor Drive Connection Port

Interface	50 PIN communication terminal
Transmission method	SPI communication
Terminal function	1. Communicating with the AC motor drive 2. Transmitting power supply from the AC motor drive
Communication	Delta HSSP protocol

Electrical Specification

Power supply voltage	5 V_{DC} (supplied by the AC motor drive)
Insulation voltage	500 V_{DC}
Communication wire power consumption	0.85 W
Power consumption	1 W
Weight	23 g

Environment

Noise immunity	ESD (IEC 61800-5-1, IEC 61000-4-2) EFT (IEC 61800-5-1, IEC 61000-4-4) Surge Teat(IEC 61800-5-1, IEC 61000-4-5) Conducted Susceptibility Test (IEC 61800-5-1, IEC 61000-4-6)
Operation /storage	Operation: -10ºC – 50ºC (temperature), 90% (humidity) Storage: -25ºC – 70ºC (temperature), 95% (humidity)
Shock / vibration resistance	International standards: IEC61800-5-1, IEC60068-2-6 (TEST Fc) / IEC61800-5-1 & IEC60068-2-27 (TEST Ea)

8-13-4 Installation

DeviceNet Connector

PIN	Signal	Color	Definition
1	V+	Red	DC 24V
2	H	White	Signal+
3	S	-	Earth
4	L	Blue	Signal-
5	V-	Black	0V

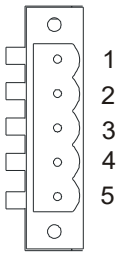

8-13-5 LED Indicator & Troubleshooting

There are three LED indicators on the CMC-DN01. POWER LED displays the status of power supply. MS LED and NS LED are dual-color LED, displaying the connection status of the communication and error messages.

POWER LED

LED status	Indication	Corrective Action
Off	Power supply in abnormal status.	Check the power supply of CMC-DN01.
Green light On	Power supply in normal status	--

NS LED

LED status	Indication	Corrective Action
Off	No power supply or CMC-DN01 does not pass the MAC ID test.	1. Check the power of CMC-DN01 and see if the connection is normal. 2. Make sure at least one or more nodes are on the bus. 3. Check if the serial transmission speed of CMC-DN01 is the same as that of other nodes.
Green light flashes	CMC-DN01 is on-line but does not connect to the master.	1. Configure CMC-DN01 to the scan list of the master. 2. Re-download the configured data to the master.
Green light on	CMC-DN01 is on-line and normally connects to the master	--
Red light flashes	CMC-DN01 is on-line, but I/O connection is timed-out.	1. Check if the network connection is normal. 2. Check if the master operates normally.
Red light on	1. The communication is down. 2. MAC ID test failure. 3. No network power supply. 4. CMC-DN01 is off-line.	1. Make sure all the MAC IDs on the network are not repeated. 2. Check if the network installation is normal. 3. Check if the baud rate of CMC-DN01 the same as that of other nodes. 4. Check if the node address of CMC-DN01 is illegal. 5. Check if the network power supply is normal.

MS LED

LED status	Indication	Corrective Action
Off	No power supply or being off-line	Check the power supply of CMC-DN01 and see if the connection is normal.
Green light flashes	Waiting for I/O data	Switch the master PLC to RUN status
Green light on	I/O data is normal	--
Red light flashes	Mapping error	1. Reset CMC-DN01 2. Re-power the AC motor drive
Red light on	Hardware error	1. See the fault codes displayed on the AC motor drive. 2. Send back to the factory for repair if necessary.
Orange light flashes	CMC-DN01 is establishing connection with the AC motor drive.	If the flashing lasts for a long time, turn off the power and check if CMC-DN01 and the AC motor drive are correctly installed and normally connected to each other.

8-14 CMC-EIP01 -- Communication card, EtherNet/IP

8-14-1 Features

1. Supports Modbus TCP and Ethernet/IP protocol
2. User-defined corresponding parameters (use with EIP V.1.06)
3. IP filter simple firewall function
4. MDI/MDI-X auto-detect
5. Baud rate: 10/100Mbps auto-detect

8-14-2 Product Profile

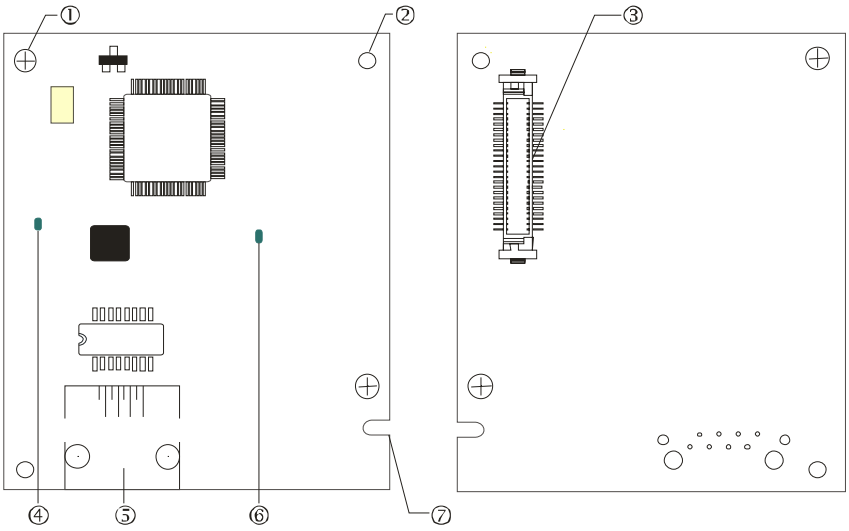

[Figure1]

1. Screw fixing hole
2. Positioning hole
3. AC motor drive connection port
4. LINK indicator
5. RJ45 connection port
6. POWER indicator
7. Alignment groove

8-14-3 Specifications

Network Interface

Interface	RJ45 with Auto MDI/MDIX
Number of ports	1 Port
Transmission method	IEEE 802.3, IEEE 802.3u
Transmission cable	Category 5e shielding 100M
Transmission speed	10/100 Mbps Auto-Detect
Network protocol	ICMP, IP, TCP, UDP, DHCP, HTTP, SMTP, Modbus over TCP/IP, EtherNet/IP, Delta Configuration

Electrical Specification

Weight	25g
Insulation voltage	500V_{DC}
Power consumption	0.8W
Power supply voltage	5V_{DC} (provided by VFD-C2000 Plus)

Environment

Noise immunity	ESD (IEC 61800-5-1, IEC 61000-4-2) EFT (IEC 61800-5-1, IEC 61000-4-4) Surge Test (IEC 61800-5-1, IEC 61000-4-5) Conducted Susceptibility Test (IEC 61800-5-1, IEC 61000-4-6)
Operation/storage	Operation: -10°C–50°C (temperature), 90% (humidity) Storage: -25°C–70°C (temperature), 95% (humidity)
Vibration/shock immunity	International standards: IEC 61800-5-1, IEC 60068-2-6/IEC 61800-5-1, IEC 60068-2-27

8-14-4 Installation

Connecting CMC-EIP01 to Network

1. Turn off the power of the drive.
2. Open the cover of the AC motor drive.
3. Connect a CAT-5e network cable to the RJ45 port on the CMC-EIP01 (See Figure 2).

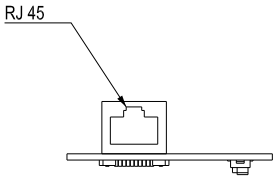

[Figure 2]

RJ45 PIN Definition

PIN	Signal	Definition	PIN	Signal	Definition
1	Tx+	Positive pole for data transmission	5	--	N/C
2	Tx-	Negative pole for data transmission	6	Rx-	Negative pole for data reception
3	Rx+	Positive pole for data reception	7	--	N/C
4	--	N/C	8	--	N/C

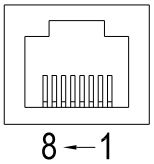

8-14-5 C2000 Plus Communication Parameter Settings for Connecting to Ethernet

When the C2000 Plus is connected to an Ethernet network, please set up the communication parameters for it according to the table below. The Ethernet master is only able to reads and writes the frequency words and control word of C2000 Plus after the communication parameters are set.

Parameters	Function	Current Setting Value	Description
00-20	Master frequency command setting	8	The frequency command is controlled by communication card.
00-21	Source of operation command setting	5	The operation command is controlled by communication card.
09-30	Communication decoding method	0	The decoding method for Delta AC motor drive
09-75	IP configuration	0	0: Static IP 1: Dynamic IP (DHCP)
09-76	IP address -1	192	IP address 192.168.1.5
09-77	IP address -2	168	IP address 192.168.1.5
09-78	IP address -3	1	IP address 192.168.1.5

Parameters	Function	Current Setting Value	Description
09-79	IP address -4	5	IP address 192.168.1.5
09-80	Netmask -1	255	Netmask 255.255.255.0
09-81	Netmask -2	255	Netmask 255.255.255.0
09-82	Netmask -3	255	Netmask 255.255.255.0
09-83	Netmask -4	0	Netmask 255.255.255.0
09-84	Default gateway -1	192	Default gateway 192.168.1.1
09-85	Default gateway -2	168	Default gateway 192.168.1.1
09-86	Default gateway -3	1	Default gateway 192.168.1.1
09-87	Default gateway -4	1	Default gateway 192.168.1.1

8-14-6 LED Indicator & Troubleshooting

There are two LED indicators on the CMC-EIP01. The POWER LED displays the status of power supply, and the LINK LED displays the connection status of the communication.

LED Indicators

LED	Status		Indication	Corrective Action
POWER	Green	On	Power supply in normal status	--
		Off	No power supply	Check the power supply.
LINK	Green	On	Network connection in normal status	--
		Flashin	Network in operation	--
		Off	Network not connected	Check if the network cable is connected.

Troubleshooting

Abnormality	Cause	Corrective Action
POWER LED off	The AC motor drive not powered	Check the power of the AC motor drive, and see if the power supply is normal.
	The CMC-EIP01 not connected to the AC motor drive	Ensure that CMC-EIP01 is connected to the AC motor drive.
LINK LED off	The CMC-EIP01 not connected to network	Ensure that the network cable is correctly connected to network.
	Poor contact to RJ45 connector	Ensure that RJ45 connector is connected to Ethernet port.
Cannot find communication card	The CMC-EIP01 not connected to network	Ensure that CMC-EIP01 is connected to network.
	The PC and CMC-EIP01 in different networks and blocked by network firewall.	Search by IP or set up relevant settings by the AC motor drive keypad.
Cannot open CMC-EIP01 setup page	The CMC-EIP01 not connected to network	Ensure that CMC-EIP01 is connected to the network.
	Incorrect communication setting in DCISoft	Ensure that the communication setting in DCISoft is set to Ethernet.
	The PC and CMC-EIP01 in different networks and blocked by network firewall.	Set up with the AC motor drive keypad.

Abnormality	Cause	Corrective Action
The CMC-EIP01 setup page opens successfully but webpage monitoring is unavailable	Incorrect network setting in CMC-EIP01	Check if the network setting for CMC-EIP01 is correct. For the Intranet setting in your company, please consult your IT staff. For the Internet setting in your home, please refer to the network setting instruction provided by your ISP.
Cannot send e-mails	Incorrect network setting in CMC-EIP01	Check if the network setting for CMC-EIP01 is correct.
	Incorrect mail server setting	Please confirm the IP address for SMTP-Server.

8-15 CMC-EC01 -- Communication card, EtherCAT

8-15-1 Features

The EtherCAT of C2000 Plus currently provides standard control mode of CiA402 Velocity (Index 6060=2), but it is non-synchronous control mode. There is no need to turn on the DC (Distribute Clock) function when operating. However, if the DC function is required for using with synchronous products (e.g. ASDA-A2), the CMC-EC01 can still be used normally under this circumstances. The C2000 Plus supports the EtherCAT function with firmware version 3.05 and above. Please be attention to the firmware you use.

8-15-2 Product Profile

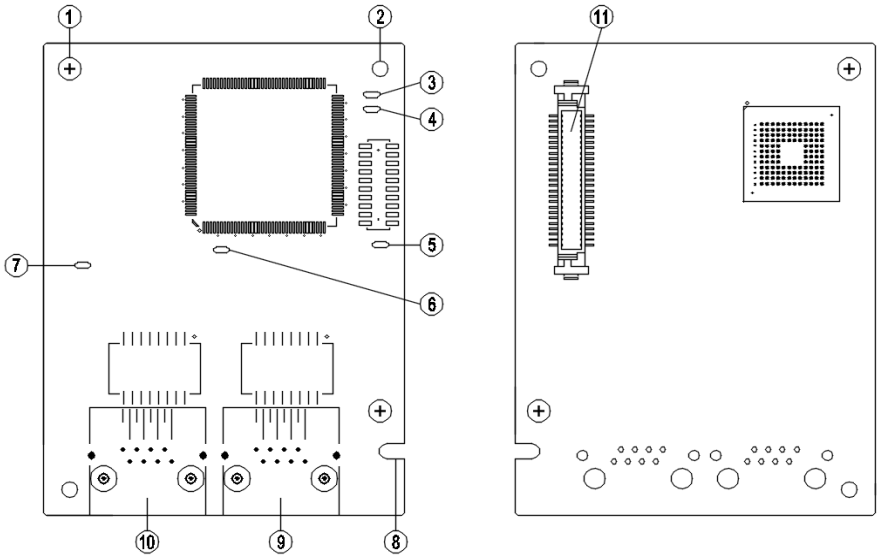

[Figure 1]

1. Screw fixing hole
2. Positioning hole
3. RUN indicator
4. ERR indicator
5. POWER indicator
6. OUT LINK indicator
7. IN LINK indicator
8. Fool-proof groove
9. RJ45 connection port
10. RJ45 connection port
11. Control board connection port

8-15-3 **Specifications**

Network Interface

Interface	RJ45
Number of ports	2 ports
Transmission method	IEEE802.3, IEEE802.3u
Transmission cable	Category 5e shielding 100 M
Transmission speed	10 / 100 Mbps Auto-Defect
Network protocol	EtherCAT

Electrical Specification

Power supply voltage	5 V_{DC}
Power consumption	0.8 W
Insulation voltage	500 V_{DC}
Weight (g)	27

Environment

Noise immunity	ESD (IEC 61800-5-1, IEC 61000-4-2) EFT (IEC 61800-5-1, IEC 61000-4-4) Surge Test (IEC 61800-5-1, IEC 61000-4-5) Conducted Susceptibility Test (IEC 61800-5-1, IEC 61000-4-6)
Operation	-10°C – 15°C (temperature), 90% (humidity)
Storage	-25°C – 70°C (temperature), 95% (humidity)
Vibration / shock immunity	International standard: IEC 61800-5-1, IEC 60068-2-6 / IEC 61800-5-1, IEC 60068-2-27

8-15-4 RJ45 PIN Definition

RJ45	PIN No.	Signal	Definition
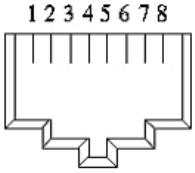	1	Tx+	Positive pole for data transmission
	2	Tx-	Negative pole for data transmission
	3	Rx+	Positive pole for data receiving
	4	--	N / C
	5	--	N / C
	6	Rx-	Negative pole for data receiving
	7	--	N / C
	8	--	N / C

8-15-5 Communication Parameters for C2000 Plus Connected to EtherCAT

When operating C2000 Plus via CMC-EC01, please set the control and operation command as controlled by communication card. When C2000 Plus is connected to EtherCAT network, please set up the communication parameters according to the table below.

Parameters	Set value (Dec)	Explanation
00-20	8	The frequency command is controlled by communication card.
00-21	5	The operation command is controlled by communication card.
09-60	6	Identification: when CMC-EC01 is connected, Pr.09-60 will show value 6 (EtherCAT Slave)
09-61	--	Version of communication card

8-15-6 LED Indicator

LED	Status		Indication
POWER	Green	On	Power supply in normal status
		Off	No power supply
LINK	Green	On	Operate in normal status
		Flashes	Pre-operation (On / Off 200 ms)
			Operate in safe mode (On 200 ms / Off 1000 ms)
		Off	Initial state
ERROR	Red	Flashes	Basic configuration error (On / Off 200 ms)
			Status switching error (On 200 ms / Off 1000 ms)
			Times out (On 200 ms twice / Off 1000 ms)
		Off	No error

LED	Status		Indication
IN LINK	Green	On	Network connection in normal status
		Flashes	Network in operation
		Off	Network not connected
OUT LINK	Green	On	Network connection in normal status
		Flashes	Network in operation
		Off	Network not connected

8-15-7 Network Connection

Because the packet delivery of EtherCAT has directional characteristics, the connection must be correct. The designed delivery direction of CMC-EC01 is left for IN / right for ON, the correct wiring is as below shown:

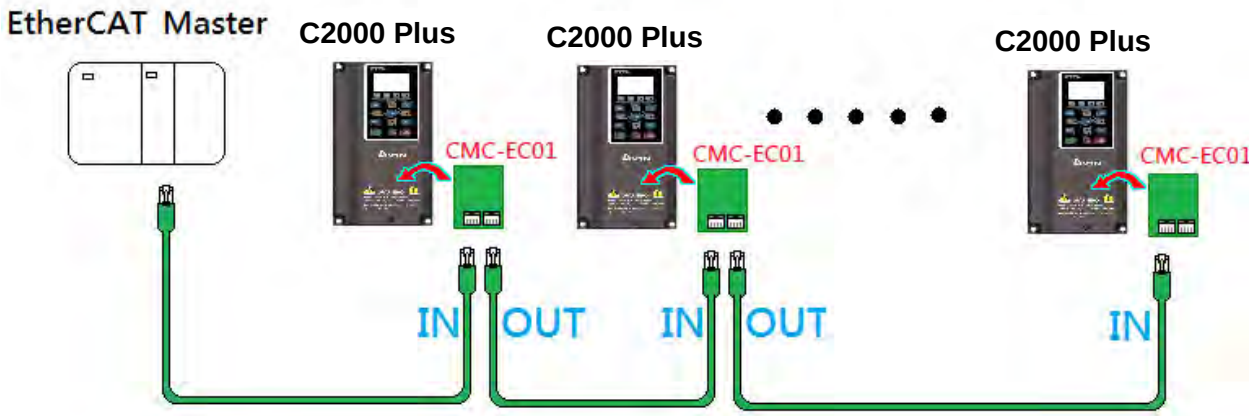

When the hardware is installed and power on, check for the display. The current set value of Pr.09-60 will be 6, and shows “EtherCAT” on the display. If the above information does not show on the display, check the version of C2000 Plus (V3.05 and above) and the connection of the card.

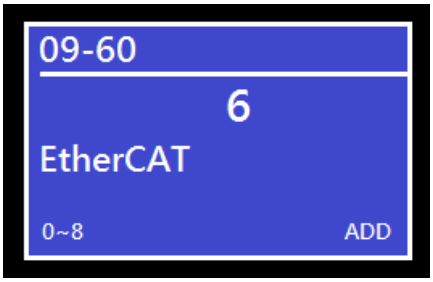

8-16 CMC-PN01 -- Communication card, PROFINET

8-16-1 Features

CMC-PN01 connects C2000 Plus drive to PROFINET to exchange data with the host controller easily. This simple network solution saves cost and time for connection and installation of factory automation. Moreover, its components are compatible with suppliers'.

By installing CMC-PN01 in C2000 Plus through the main PROFINET device, you can:

1. Control the drive through PROFINET
2. Modify the drive's parameters through PROFINET
3. Monitor the drive's status through PROFINET.

8-16-2 Product profile

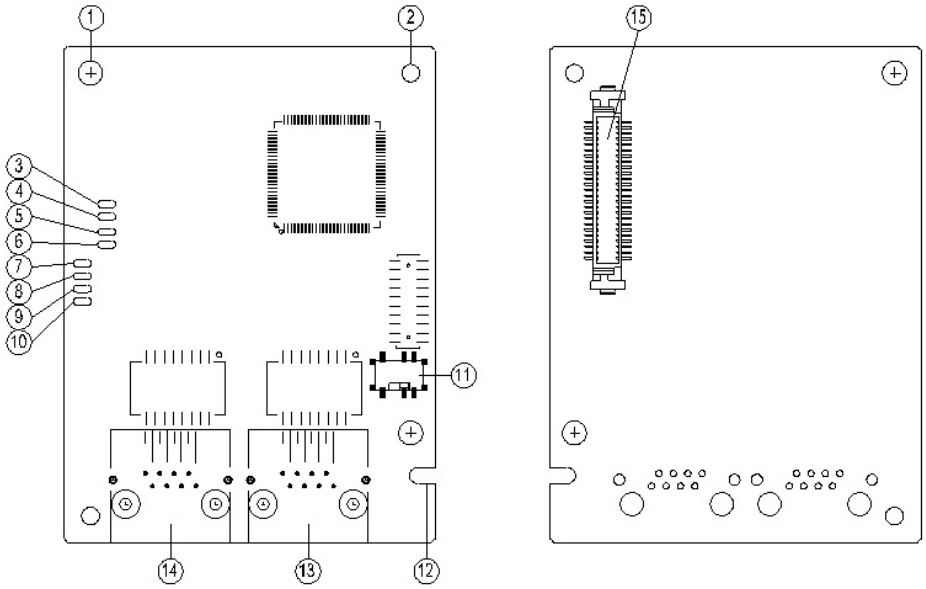

1. Screw fixing hole
2. Communication card fixing hole
3. Indicator light: Ready out
4. Indicator light: MT out
5. Indicator light: SD
6. Indicator light: BF out
7. Indicator light: ACT PHY2
8. Indicator light: Link PHY2
9. Indicator light: ACT PHY1
10. ndicator light: Link PHY2
11. ON / OFF switch
12. Fool-proofing slot to the communication card
13. RJ45 port (Port2)
14. RJ45 port (Port1)
15. A port to connect with control board

Label with MAC address

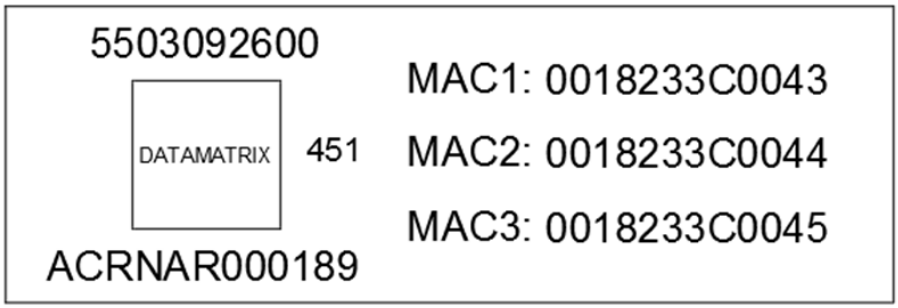

Definition	Description
MAC1	Port 1 MAC Address
MAC2	Port 2 MAC Address
MAC3	Interface MAC Address

8-16-3 Specifications

Network interface

Item	Specifications
Interface	RJ45
Number of ports	2 ports
Transmission cable	IEEE 802.3
Transmission rate	Category 5e shielding 100 M
Communication protocol	10/100 Mbps auto-negotiate
Interface	PROFINET

Electrical specification

Item	Specifications
Power supply voltage	5 V_{DC}
Power consumption	0.8 W
Insulation voltage	500 V_{DC}
Weight (g)	27 (g)

Environmental conditions

Item	Specifications
Noise immunity	ESD (IEC 61800-5-1, IEC 6100-4-2) EFT (IEC 61800-5-1, IEC 6100-4-4) Surge Teat (IEC 61800-5-1, IEC 6100-4-5) Conducted Susceptibility Test (IEC 61800-5-1, IEC 6100-4-6)
Operation and storage	-10–50°C (temperature), 90% (humidity)
Vibration & shock resistance	International Standard: IEC 61800-5-1, IEC 60068-2-6 / IEC 61800-5-1, IEC 60068-2-27

8-16-4 Definition of PINs in RJ45 port

RJ45	PIN	Signal	Definition
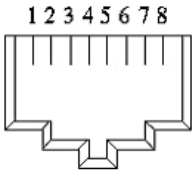	1	Tx+	Positive pole for data transmission
	2	Tx-	Negative pole for data transmission
	3	Rx+	Positive pole for receiving data
	4	--	N/C
	5	--	N/C
	6	Rx-	Negative pole for receiving data
	7	--	N/C
	8	--	N/C

8-16-5 To set the communication parameters when C2000 Plus connects with PROFINET

When you operate C2000 Plus through CMC-PN01, set up the communication card as the source of C2000 Plus controls and settings. You need to use the keypad to configure the following parameter addresses to the corresponding values:

Parameters	Setting value	Description
00-20	8	The frequency command is controlled by communication card
00-21	5	The frequency command is controlled by communication card
09-30	1	Use decoding method (60xx or 20xx)
09-60	12	Communication card identification: When CMC-PN01 communication card is connected, the value of this parameter displays “12”.

8-16-6 LED indicator introduction

Name	Indicator status		Indication
Ready out indicator	Yellow LED	Always on	PN Stack starts normally
		Flashing	PN Stack starts normally, and waiting for syncing with MCU
		Off	PN Stack failed to start
MT out indicator	Green LED	-	-
SD indicator	Red LED	-	-
BF out indicator	Red LED	Always on	Connection with PROFINET Controller is interrupted
		Flashing	Connection is in normal state, but the communication with PROFINET Controller is abnormally
		Off	Connection with PROFINET Controller is in normal state
ACT PHY1 indicator	Orange LED	Always on	It’s online, and exchanging the data with Master normally
		Flashing	It’s offline, but hand shaking the data with Master
		Off	Initial state
LINK PHY1 indicator	Green LED	Always on	Internet connection is in normal state
		Off	Doesn’t connect to network
ACT PHY2 indicator	Orange LED	Always on	It’s online, and exchanging the data with Master normally
		Flashing	It’s offline, but hand shaking the data with Master
		Off	Initial state
LINK PHY2 indicator	Green LED	Always on	Internet connection is in normal state
		Off	Doesn’t connect to network

8-16-7 Network connection

The wiring of CMC-PN01 shows as follows:

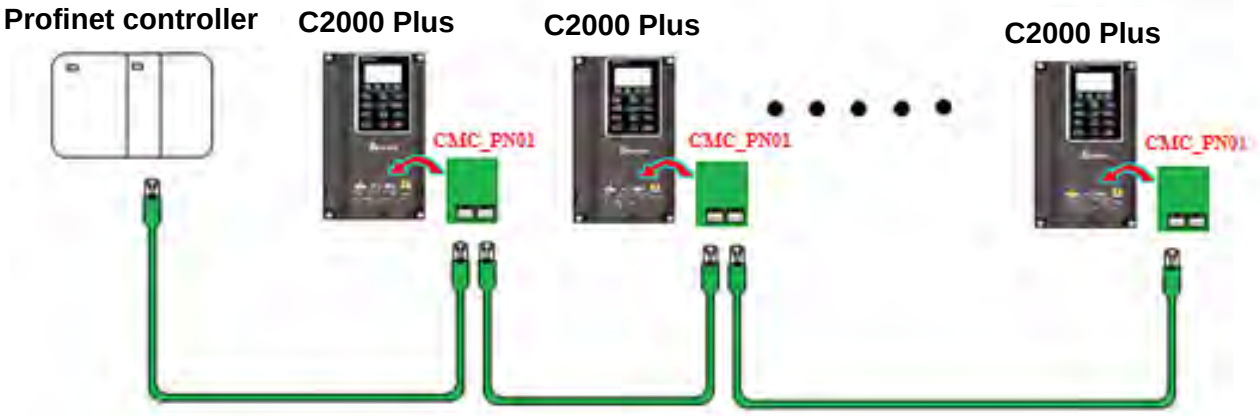

When the installation is finished, supply electricity to the drive. The Pr.09-60 of the drive should be able to display “PROFINET” with a current value of 12. If not, make sure your version of the drive is correct (C2000 Plus needs V3.05 or later versions) and the communication card is correctly connected.

8-17 EMC-COP01 -- Communication card, CANopen

8-17-1 Terminating Resistor Position

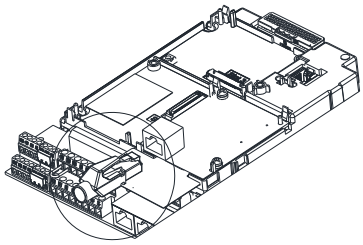

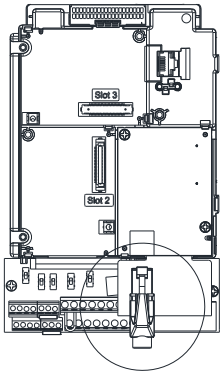

8-17-2 RJ45 Pin Definition

RS485 socket

Pin	Pin name	Definition
1	CAN_H	CAN_H bus line (dominant high)
2	CAN_L	CAN_L bus line (dominant low)
3	CAN_GND	Ground / 0V / V-
7	CAN_GND	Ground / 0V / V-

8-17-3 Specifications

Interface	RJ45
Number of ports	1 Port
Transmission method	CAN
Transmission cable	CAN standard cable
Transmission speed	1 Mbps, 500 Kbps, 250 Kbps, 125 Kbps, 100 Kbps, 50 Kbps
Communication protocol	CANopen

8-18 Delta Standard Fieldbus Cables

Delta Cables	Part Number	Description	Length
CANopen Cable / RJ45 extension cable for keypad	UC-CMC003-01A	CANopen cable, RJ45 connector	0.3 m
	UC-CMC005-01A	CANopen cable, RJ45 connector	0.5 m
	UC-CMC010-01A	CANopen cable, RJ45 connector	1 m
	UC-CMC015-01A	CANopen cable, RJ45 connector	1.5 m
	UC-CMC020-01A	CANopen cable, RJ45 connector	2 m
	UC-CMC030-01A	CANopen cable, RJ45 connector	3 m
	UC-CMC050-01A	CANopen cable, RJ45 connector	5 m
	UC-CMC100-01A	CANopen cable, RJ45 connector	10 m
	UC-CMC200-01A	CANopen cable, RJ45 connector	20 m
DeviceNet Cable	UC-DN01Z-01A	DeviceNet cable	305 m
	UC-DN01Z-02A	DeviceNet cable	305 m
EtherNet / EtherCAT Cable	UC-EMC003-02A	Ethernet / EtherCAT cable, Shielding	0.3 m
	UC-EMC005-02A	Ethernet / EtherCAT cable, Shielding	0.5 m
	UC-EMC010-02A	Ethernet / EtherCAT cable, Shielding	1 m
	UC-EMC020-02A	Ethernet / EtherCAT cable, Shielding	2 m
	UC-EMC050-02A	Ethernet / EtherCAT cable, Shielding	5 m
	UC-EMC100-02A	Ethernet / EtherCAT cable, Shielding	10 m
	UC-EMC200-02A	Ethernet / EtherCAT cable, Shielding	20 m
CANopen / DeviceNet TAP	TAP-CN01	1 in 2 out, built-in 121 Ω terminal resistor	1 in 2 out
	TAP-CN02	1 in 4 out, built-in 121 Ω terminal resistor	1 in 4 out
	TAP-CN03	1 in 4 out, RJ45 connector, built-in 121 Ω terminal resistor	1 in 4 out, RJ45
PROFIBUS Cable	UC-PF01Z-01A	PROFIBUS DP cable	305 m

[This page intentionally left blank]

Chapter 9 Specification

9-1 230V Models

9-2 460V Models

9-3 575V Models

9-4 690V Models

9-5 Environment for Operation, Storage and Transportation

9-6 Specification for Operation Temperature and Protection Level

9-7 Derating Curve

9-8 Efficiency Curve

9-1 230V Models

Frame Size				A				B			C			D		E			F
VFD _ _ _C23A-00 / -21				007	015	022	037	055	075	110	150	185	220	300	370	450	550	750	900
Output Rating*	Heavy duty	Rated Output Capacity [kVA]		2.0	3.2	4.4	6.8	10	13	20	26	30	36	48	58	72	86	102	138
		Rated Output Current [A]		5	8	11	17	25	33	49	65	75	90	120	146	180	215	255	346
		Applicable Motor Output [kW]		0.75	1.5	2.2	3.7	5.5	7.5	11	15	18.5	22	30	37	45	55	75	90
		Applicable Motor Output [HP]		1	2	3	5	7.5	10	15	20	25	30	40	50	60	75	100	125
		Overload Capacity		150% of rated output current: 1 minute for every 5 minutes; 180% of rated output current: 3 seconds for every 30 seconds															
		Max. Output Frequency [Hz]		0.00–599.00															
		Carrier Frequency [kHz]		2–15 (Default: 8)							2–10 (Default: 6)					2–9 (Default: 4)			
	Super Heavy Duty	Rated Output Capacity [kVA]		1.2	2	3.2	4.4	6.8	10	13	20	26	30	36	48	58	72	86	102
		Rated Output Current [A]		3	5	8	11	17	25	33	49	65	75	90	120	146	180	215	255
		Applicable Motor Output [kW]		0.4	0.75	1.5	2.2	3.7	5.5	7.5	11	15	19	22	30	37	45	55	75
		Applicable Motor Output [HP]		0.5	1	2	3	5	7.5	10	15	20	25	30	40	50	60	75	100
		Overload Capacity		150% of rated output current: 1 minute for every 5 minutes; 200% of rated output current: 3 seconds for every 30 seconds															
		Max. Output Frequency [Hz]		0.00–599.00															
		Carrier Frequency [kHz]		2–15 (Default: 4)							2–10 (Default: 4)					2–9 (Default: 4)			
Input Rating	Input Current [A]	Heavy Duty		6.4	12	16	20	28	36	52	72	83	99	124	143	171	206	245	331
		Super Heavy Duty		3.9	6.4	12	16	20	28	36	52	72	83	99	124	143	171	206	245
	Rated Voltage / Frequency			3-phase AC 200–240V (-15 % – +10 %), 50 / 60 Hz															
	Operating Voltage Range			170–264 V_{AC}															
	Frequency Tolerance			47–63 Hz															
Efficiency [%]				97.8												98.2			
Power Factor				>0.98															
Drive Weight [Kg]				2.6 ± 0.3				5.4 ± 1			9.8 ± 1.5			38.5 ± 1.5		64.8 ± 1.5			86.5 ± 1.5
Cooling Method				Natural cooling	Fan cooling														
Braking Chopper				Frame A–C: Built-in										Frame D–F: Optional					
DC choke				Frame A–C: Optional										Frame D–F: Built-in					
EMC Filter				Frame A~F: Optional															
EMC-COP01				Frame A~F: Optional															

Table 9-1

NOTE

1. * : The default is heavy duty mode.
2. The carrier frequency is default. Increasing the carrier frequency requires a reduction in current. Refer to Section 9-7 Derating Curve for details.
3. The AC motor drive should operate in derating current when its control method is set to FOC Sensorless, TQC+PG, TQC sensorless. PM+PG, PM sensorless Refer to Pr.06-55 for more information.
4. The rated input current will be affected by not only power transformer and the connection of the reactors on input side, but also fluctuates with the impedance of power side.

9-2 460V Models

Frame Size			A						B			C		
VFD _ _ _ C_ _ -00 / -21			007	015	022	037	040	055	075	110	150	185	220	300
Output Rating*	Heavy duty	Rated Output Capacity [kVA]	2.4	3.2	4.8	7.2	8.4	10	14	19	25	30	36	48
		Rated Output Current [A]	3.0	4.0	6.0	9.0	10.5	12	18	24	32	38	45	60
		Applicable Motor Output [kW]	0.75	1.5	2.2	3.7	4.0	5.5	7.5	11	15	18.5	22	30
		Applicable Motor Output [HP]	1	2	3	5	5	7.5	10	15	20	25	30	40
		Overload Capacity	150% of rated output current: 1 minute for every 5 minutes; 180% of rated output current: 3 seconds for every 30 seconds											
		Max. Output Frequency [Hz]	0.00–599.00											
		Carrier Frequency [kHz]	2–15 (Default: 8)									2–10 (Default: 6)		
	Super Heavy Duty	Rated Output Capacity [kVA]	1.4	2.4	3.2	4.8	7.2	8.4	9.6	14	19	25	30	36
		Rated Output Current [A]	1.7	3	4	6	9	10.5	12	18	24	32	38	45
		Applicable Motor Output [kW]	0.4	0.75	1.5	2.2	3.7	4.0	5.5	7.5	11	15	18.5	22
		Applicable Motor Output [HP]	0.5	1	2	3	5	5	7.5	10	15	20	25	30
		Overload Capacity	150% of rated output current: 1 minute for every 5 minutes; 200% of rated output current: 3 seconds for every 30 seconds											
		Max. Output Frequency [Hz]	0.00–599.00											
		Carrier Frequency [kHz]	2–15 (Default: 4)									2–10 (Default: 4)		
Input Rating	Input Current [A]	Heavy Duty	4.3	5.9	8.7	14	15.5	17	20	26	35	40	47	63
		Super Heavy Duty	3.5	4.3	5.9	8.7	14	15.5	17	20	26	35	40	47
	Rated Voltage / Frequency		3-phase AC 380–480V (-15 % – +10 %), 50 / 60 Hz											
	Operating Voltage Range		323–528 V_{AC}											
	Frequency Tolerance		47–63 Hz											
Efficiency [%]			97.8											
Power Factor			>0.98											
Drive Weight [Kg]			2.6± 0.3						5.4± 1			9.8± 1.5		
Cooling Method			Natural cooling	Fan cooling										
Braking Chopper			Frame A–C: Built-in											
DC choke			Frame A–C: Optional											
EMC Filter			Frame A–C (VFDxxxC43A-21): Optional Frame A–C (VFDxxxC4EA-21): Built-in											
EMC-COP01			Frame A–C (VFDxxxC43A-21): Optional Frame A–C (VFDxxxC4EA-21): Built-in											

Table 9-2

NOTE

1. * : The factory setting is heavy duty mode.
2. The carrier frequency is default. Increasing the carrier frequency requires a reduction in current. Refer to Section 9-7 Derating Curve for details.
3. The AC motor drive should operate in derating current when its control method is set to FOC Sensorless, TQC+PG, TQC sensorless. PM+PG, PM sensorless. Refer to Pr. 06-55 for more information.
4. The rated input current will be affected by not only power transformer and the connection of the reactors on input side, but also fluctuates with the impedance of power side.

Frame Size			D0		D		E		F	
VFD-_ _ _ C_ _ _-21 / -00			370	450	550	750	900	1100	1320	1600
Output Rating*	Heavy duty	Rated Output Capacity [kVA]	58	73	88	120	143	175	207	247
		Rated Output Current [A]	73	91	110	150	180	220	260	310
		Applicable Motor Output [kW]	37	45	55	75	90	110	132	160
		Applicable Motor Output [HP]	50	60	75	100	125	150	175	215
		Overload Capacity	150% of rated output current: 1 minute for every 5 minutes; 180% of rated output current: 3 seconds for every 30 seconds							
		Max. Output Frequency [Hz]	0.00–599.00							
		Carrier Frequency [kHz]	2–10 (Default: 6)			2–9 (Default: 4)				
	Super Heavy Duty	Rated Output Capacity [kVA]	48	58	73	88	120	143	175	207
		Rated Output Current [A]	60	73	91	110	150	180	220	260
		Applicable Motor Output [kW]	30	37	45	55	75	90	110	132
		Applicable Motor Output [HP]	40	50	60	75	100	125	150	175
		Overload Capacity	150% of rated output current: 1 minute for every 5 minutes; 200% of rated output current: 3 seconds for every 30 seconds							
		Max. Output Frequency [Hz]	0.00–599.00							
		Carrier Frequency [kHz]	2–10 (Default: 4)			2–9 (Default: 4)				
Input Rating	Input Current [A]	Heavy Duty	74	101	114	157	167	207	240	300
		Super Heavy Duty	63	74	101	114	157	167	207	240
	Rated Voltage / Frequency		3-phase AC 380–480V (-15 % – +10 %), 50 / 60 Hz							
	Operating Voltage Range		323–528 V_{AC}							
	Frequency Tolerance		47–63 Hz							
Efficiency [%]			97.8				98.2			
Power Factor			>0.98							
Drive Weight [Kg]			27 ± 1.5		38.5 ± 1.5		64.8 ± 1.5		86.5 ± 1.5	
Cooling Method			Fan cooling							
Braking Chopper			Frame D0–F: Optional							
DC choke			Frame D0–F: Built-in							
EMC Filter			Frame D0–F: Optional							
EMC-COP01			Frame D0–F (VFDxxxC43A-00): Optional Frame D0–F (VFDxxxC43A-21): Built-in							

Table 9-3

NOTE

1. * : The factory setting is heavy duty mode.
2. The carrier frequency is default. Increasing the carrier frequency requires a reduction in current. Refer to Section 9-7 Derating Curve for details.
3. The AC motor drive should operate in derating current when its control method is set to FOC Sensorless, TQC+PG, TQC sensorless. PM+PG, PM sensorless Please refer to Pr. 06-55 for more information.
4. The rated input current will be affected by not only power transformer and the connection of the reactors on input side, but also fluctuates with the impedance of power side.

Frame Size			G				H						
VFD-_ _ _ C_ _ _-21 / -00			1850	2000	2200	2500	2800	3150	3550	4000	4500	5000	5600
Output Rating*	Heavy duty	Rated Output Capacity [kVA]	295	315	367	383	438	491	544	613	690	741	872
		Rated Output Current [A]	370	395	460	481	550	616	683	770	866	930	1094
		Applicable Motor Output [kW]	185	200	220	250	280	315	355	400	450	500	560
		Applicable Motor Output [HP]	250	270	300	340	375	420	475	530	600	675	750
		Overload Capacity	150% of rated output current: 1 minute for every 5 minutes; 180% of rated output current: 3 seconds for every 30 seconds										
		Max. Output Frequency [Hz]	0.00–599.00										
		Carrier Frequency [kHz]	2–9 (Default: 4)										
	Super Heavy Duty	Rated Output Capacity [kVA]	247	247	295	315	366	438	491	544	544	690	741
		Rated Output Current [A]	310	310	370	395	460	550	616	683	683	866	930
		Applicable Motor Output [kW]	160	160	185	200	220	280	315	355	355	450	500
		Applicable Motor Output [HP]	215	215	250	270	300	375	425	475	475	600	675
		Overload Capacity	150% of rated output current: 1 minute for every 5 minutes; 200% of rated output current: 3 seconds for every 30 seconds										
		Max. Output Frequency [Hz]	0.00–599.00										
		Carrier Frequency [kHz]	2–9 (Default: 4)				2–9 (Default: 3)						
Input Rating	Input Current [A]	Heavy Duty	380	395	400	447	494	555	625	770	866	930	1094
		Super Heavy Duty	300	300	380	390	400	494	555	590	625	866	930
	Rated Voltage / Frequency		3-phase AC 380–480V (-15 % – +10 %), 50 / 60 Hz										
	Operating Voltage Range		323–528 V_{AC}										
	Frequency Tolerance		47–63 Hz										
Efficiency [%]			98.2										
Power Factor			>0.98										
Drive Weight [Kg]			134 ± 4				228						
Cooling Method			Fan cooling										
Braking Chopper			Frame G–H: Optional										
DC choke			Frame G–H: Built-in										
EMC Filter			Frame G–H: Optional										
EMC-COP01			Frame G–H (VFDxxxC43A-00): Optional Frame G–H (VFDxxxC43A-21): Built-in										

Table 9-4

NOTE

1. * : The factory setting is heavy duty mode.
2. The carrier frequency is default. Increasing the carrier frequency requires a reduction in current. Refer to Section 9-7 Derating Curve for details.
3. The AC motor drive should operate in derating current when its control method is set to FOC Sensorless, TQC+PG, TQC sensorless. PM+PG, PM sensorless Please refer to Pr. 06-55 for more information.
4. The rated input current will be affected by not only power transformer and the connection of the reactors on input side, but also fluctuates with the impedance of power side.
5. Model VFD4500C43x-xx, VFD5000C43x-xx, VFD5600C43x-xx do not have UL certification.

9-3 575V Models

Frame Size			A			B			
VFD-_ _ _ C53A-21			015	022	037	055	075	110	150
*Output Rating	Light Duty	Rated Output Capacity [kVA]	3	4.3	6.7	9.9	12.1	18.6	24.1
		Rated Output Current [A]	3	4.3	6.7	9.9	12.1	18.7	24.2
		Applicable Motor Output [kW]	1.5	2.2	3.7	5.5	7.5	11	15
		Applicable Motor Output [HP]	2	3	5	7.5	10	15	20
	Normal Duty	Rated Output Capacity [kVA]	2.5	3.6	5.5	8.2	10	15.4	19.9
		Rated Output Current [A]	2.5	3.6	5.5	8.2	10	15.5	20
		Applicable Motor Output [kW]	0.75	1.5	2.2	3.7	5.5	7.5	11
		Applicable Motor Output [HP]	1	2	3	5	7.5	10	15
	Heavy Duty	Rated Output Capacity [kVA]	2.1	3	4.6	6.9	8.3	12.9	16.7
		Rated Output Current [A]	2.1	3	4.6	6.9	8.3	13	16.8
		Applicable Motor Output [kW]	0.75	1.5	2.2	3.7	3.7	7.5	7.5
		Applicable Motor Output [HP]	1	2	3	5	5	10	10
	Max. Output Frequency [Hz]		0.00–599.00						
	Carrier Frequency [kHz]		2–15 (Default: 4)						
Input Rating	Input Current [A]	Light Duty	3.8	5.4	10.4	14.9	16.9	21.3	26.3
		Normal Duty	3.1	4.5	7.2	12.3	15	18	22.8
		Heavy Duty	2.6	3.8	5.8	10.7	12.5	16.9	19.7
	Rated Voltage / Frequency		3-phase AC 525–600 V (-15% – +10%), 50 / 60 Hz						
	Operating Voltage Range		446–660 V_{AC}						
	Frequency Tolerance		47–63Hz						
Efficiency [%]			97			98			
Power Factor			>0.98						
Drive Weight [Kg]			3 ± 0.3			4.8 ± 1			
Cooling Method			Natural cooling		Fan cooling				
Braking Chopper			Frame A~B: Built-in						
DC choke			Frame A~B: Optional						
EMC Filter			Frame A~B: Optional						

Table 9-5

NOTE

* Pr.00-16; available duty modes: Light Duty (LD), Normal Duty (ND) and Heavy Duty (HD); default setting is LD mode

9-4 690V Models

Frame Size			C				D		E			
VFD-_ _ _ C63B-00 / -21			185	220	300	370	450	550	750	900	1100	1320
*Output Rating	Light Duty	Rated Output Capacity [kVA]	29	36	43	54	65	80	103	124	149	179
		Applicable Motor Output [690V, kW]	18.5	22	30	37	45	55	75	90	110	132
		Applicable Motor Output [690V, HP]	25	30	40	50	60	75	100	125	150	175
		Applicable Motor Output [575V, HP]	20	25	30	40	50	60	75	100	125	150
		Rated Output Current [A]	24	30	36	45	54	67	86	104	125	150
	Normal Duty	Rated Output Capacity [kVA]	24	29	36	43	54	65	80	103	124	149
		Applicable Motor Output [690V, kW]	15	18.5	22	30	37	45	55	75	90	110
		Applicable Motor Output [690V, HP]	20	25	30	40	50	60	75	100	125	150
		Applicable Motor Output [575V, HP]	15	20	25	30	40	50	60	75	100	125
		Rated Output Current [A]	20	24	30	36	45	54	67	86	104	125
	Heavy Duty	Rated Output Capacity [kVA]	17	24	29	36	43	54	65	80	103	124
		Applicable Motor Output [690V, kW]	11	15	18.5	22	30	37	45	55	75	90
		Applicable Motor Output [690V, HP]	15	20	25	30	40	50	60	75	100	125
		Applicable Motor Output [575V, HP]	10	15	20	25	30	40	50	60	75	100
		Rated Output Current [A]	14	20	24	30	36	45	54	67	86	104
	Max. Output Frequency [Hz]		0.00–599.00									
	Carrier Frequency [kHz]		2–9 (Default: 4)									
Input Rating	Input Current [A]	Light Duty	29	36	43	54	65	81	84	102	122	147
		Normal Duty	24	29	36	43	54	65	66	84	102	122
		Heavy Duty	20	24	29	36	43	54	53	66	84	102
	Rated Voltage / Frequency		3-phase AC 525–690 V (-15% – +10%), 50 / 60 Hz									
	Operating Voltage Range		446–759 V_{AC}									
	Frequency Tolerance		47–63Hz									
Efficiency [%]			97									
Power Factor			>0.98									
Drive Weight [Kg]			10 ± 1.5				39 ± 1.5		61 ± 1.5			
Cooling Method			Fan cooling									
Braking Chopper			Frame C: Built-in				Frame D–E: Optional					
DC choke			Frame C: Optional				Frame D–E: Built-in					
EMC Filter			Frame C–E: Optional									

Table 9-6

NOTE

* Pr.00-16; available duty modes: Light Duty (LD), Normal Duty (ND) and Heavy Duty (HD); default setting is LD mode

Frame Size			F		G		H			
VFD-_ _ _ C63B-00/21			1600	2000	2500	3150	4000	4500	5600	6300
*Output Rating	Light Duty	Rated Output Capacity [kVA]	215	263	347	418	494.5	534.7	678.5	776
		Applicable Motor Output [690V, kW]	160	200	250	315	400	450	560	630
		Applicable Motor Output [690V, HP]	215	270	335	425	530	600	745	850
		Applicable Motor Output [575V, HP]	175	200	250	350	400	450	500	745
		Rated Output Current [A]	180	220	290	350	430	465	590	675
	Normal Duty	Rated Output Capacity [kVA]	179	215	239	347	402.5	442.7	534.7	776
		Applicable Motor Output [690V, kW]	132	160	200	250	315	355	450	630
		Applicable Motor Output [690V, HP]	175	215	270	335	425	475	600	850
		Applicable Motor Output [575V, HP]	150	175	200	250	350	400	450	745
		Rated Output Current [A]	150	180	220	290	350	385	465	675
	Heavy Duty	Rated Output Capacity [kVA]	149	179	215	263	333.5	356.5	483	776
		Applicable Motor Output [690V, kW]	110	132	160	200	250	280	400	630
		Applicable Motor Output [690V, HP]	150	175	215	270	335	375	530	850
		Applicable Motor Output [575V, HP]	125	150	175	200	250	335	450	745
		Rated Output Current [A]	125	150	180	220	290	310	420	675
	Max. Output Frequency [Hz]		0.00–599.00							
	Carrier Frequency [kHz]		2–9 (Default: 4)							2–9 (Default: 3)
Input Rating	Input Current [A]	Light Duty	178	217	292	353	454	469	595	681
		Normal Duty	148	178	222	292	353	388	504	681
		Heavy Duty	123	148	181	222	292	313	423	681
	Rated Voltage / Frequency		3-phase AC 525–690 V (-15% – +10%), 50 / 60 Hz							
	Operating Voltage Range		446–759 V_{AC}							
	Frequency Tolerance		47–63 Hz							
Efficiency [%]			97		98					
Power Factor			>0.98							
Drive Weight [Kg]			88 ± 1.5		135 ± 4		243 ± 5			
Cooling Method			Fan cooling							
Braking Chopper			Frame F~H: Optional							
DC choke			Frame F~H: Built-in							
EMC Filter			Frame F~H: Optional							

Table 9-7

NOTE

* Pr.00-16; available duty modes: Light Duty (LD), Normal Duty (ND) and Heavy Duty (HD); default setting is LD mode

General Specifications

Item		Specifications
Control Characteristics	Control Mode*1	230V_{AC} / 460V_{AC} models Select a control mode listed below via parameter, ● IMVF (Induction Motor, V/F control) ● IMVF + PG (Induction Motor, V/F control, with encoder) ● IM / PM SVC (Induction Motor / Permanent-Magnet Synchronous Motor, Space Vector Control) ● IMFOC + PG (Induction Motor, Field-Oriented Control, with encoder) ● PMFOC + PG (Permanent-Magnet Synchronous Motor, Field-Oriented Control, with encoder) ● IMFOC Sensorless (Induction Motor, sensorless Field-Oriented Control) ● PM Sensorless (Permanent-Magnet Synchronous Motor, sensorless Field-Oriented Control) ● IPM Sensorless (Interior Permanent-Magnet Synchronous Motor, sensorless Field-Oriented Control) ● SynRM Sensorless (Synchronous Reluctance Motor, sensorless Field-Oriented Control) ● IM TQCPG (Induction Motor, Torque Control, with encoder) ● PM TQCPG (Permanent-Magnet Synchronous Motor, Torque Control, with encoder) ● IM TQC Sensorless (Induction Motor, sensorless Torque Control) ● SynRM TQC Sensorless (Synchronous Reluctance Motor, sensorless Torque Control)
		575V_{AC} / 690V_{AC} models Select a control mode listed below via parameter, ● IMVF (Induction Motor, V/F control) ● IMVF + PG (Induction Motor, V/F control, with encoder) ● IM / PM SVC (Induction Motor / Permanent-Magnet Synchronous Motor, Space Vector Control)
	Max. Output Frequency*2	0–599 Hz
	Frequency Output Accuracy	Digital command: ±0.01%, -10°C– +40°C; Analog command: ±0.1%, 25±10°C
	Output Frequency Resolution	Digital command: 0.01 Hz ; Analog command: 0.05% x max. output frequency (Pr.01-00), 11 bit plus sign
	Speed Control Range (Ratio of Speed control)*3	● IMVF, IMVF + PG, IMSVC 1:50 ● IMFOC Sensorless 1:100 ● IMFOC + PG 1:1000 ● PMSVC 1:20 ● PM Sensorless 1:50 ● IPM Sensorless 1:100 ● PMFOC + PG 1:1000
	Starting Torque	● IMVF, IMVF + PG, IMSVC 150% / 3 Hz ● IMFOC Sensorless 200% / 0.5 Hz ● IMFOC + PG 200% / 0 Hz ● PMSVC 100% / (motor rated frequency / 20) ● PM Sensorless 100% / (motor rated frequency / 50)

		● IPM Sensorless 100% / 0 Hz ● PMFOC + PG 200% / 0 Hz
	Torque Accuracy*4	TQC + PG: ±5%; TQC Sensorless: ±15%
	Torque Limit	230V AC / 460V AC models Heavy duty 180%, super heavy duty 220% of torque current ➢ Under field-oriented control (FOC), you can set up separately in quadrant via parameters. 575V AC / 690V AC models Maximum 200% of torque current
Protection Characteristics	Output Over-current	230V AC / 460V AC models Over-current protection for 240% of rated current (Heavy duty) 575V AC / 690V AC models Over-current protection for 240% rated current (Normal duty) ➢ Drive stops and display related fault code when over current tripped.
	Output Current Clamp	230V AC / 460V AC models Current clamp by hardware, heavy duty and super heavy duty: 190–195% rated current 575V AC / 690V AC models ● Current clamp by hardware, Light duty: 125–145% rated current; normal duty: 170–175% rated current; heavy duty: 200–250% rated current ● VFD6300C63B-00/21: Current clamp by hardware, light duty / normal duty / heavy duty: 170–175% rated current ➢ Drive will be auto-recovered after output backs to rated current.
	Over-voltage (DC)	C2000 Plus shuts down under below condition: 230VAC: DC bus over 410 V; 460VAC: DC bus over 820 V; 575 VAC / 690 VAC: DC bus over 1189 V
	Grounding Leakage Current Protection*5	The output is grounding, the leakage current is higher than 60% of the rated current.
	Output Low / Under Current Fault*5	The output is broken, no current outputs.
	Short-circuit Current Rating (SCCR)	Per UL 508C, the drive is suitable for using on a circuit capable of delivering not more than 100kA symmetrical amperes (rms) when protected by fuses given in the fuse table.
	Motor Overheat Protection*5	Support electronic thermal relay, PTC, KTY84-13-, PT100 for overheat protection.
	Drive Overheat Protection	Built-in temperature sensor (driven element oH1, capacitance module oH2) for overheat protection.
	Fan Control	230V AC models For the models VFD150C2XX-XX and above use PWM control; for the models VFD110C2XX-XX and below use switch button (ON / OFF) 460V AC models For the models VFD185C4XX-XX and above use PWM control; for the models VFD150C4XX-XX and below use switch button (ON / OFF) 575V AC / 690V AC model PWM control

Product Compliance	**CE** Low Voltage Directive(LVD) 2014/35/EU, EN61800-5-1 EMC Directive 2014/35/EU, EN61800-3 **UL**508C, **cUL** CAN/CSA C22.2 No.14-13, No.274*6 , **Plenum rated** **RCM**, **KC***7, **EAC***7, (**C**م mark)*8 , **SEMI F47**-0706, **GB**12668.3 **WEEE** 2012/19/EU**, RoHS** 2011/95/EU*9 Quality assurance system **ISO 9001** and Environmental system **ISO 14001**
Safety Standard	Safe Torque Off（EN / IEC61800-5-2）TUV Rheinland Certified IEC62061/IEC61508, SIL CL2 EN ISO13849-1, Cat.3/PL d

Table 9-8

NOTE

*1: 230V AC / 460V AC models: support synchronous reluctance control mode after the firmware V3.06; 575V AC / 690V AC models: support field-oriented control (FOC) mode after the firmware V2.06.

*2: The setting range of the maximum output frequency varies from carrier and control modes. Refer to Pr.01-00 and Pr.06-55 for more information.

*3: Based on heavy duty, and the speed control range varies from environment, application conditions, types of motor and encoder.

*4: Defined under torque control (TQC) mode.

*5: The protection level can adjust via parameters.

*6: VFD4500C43x-xx, VFD5000C43x-xx, VFD5600C43x-xx do not have UL certification.

*7: Only for 230V AC / 460V AC models.

*8: Mandatory conformity mark in Morocco.

*9: In the process of applying for RoHS 2015/863/EU.

9-5 Environment for Operation, Storage and Transportation

DO NOT expose the AC motor drive in the bad environment, such as dust, direct sunlight, corrosive / inflammable gasses, humidity, liquid and vibration environment. The salt in the air must be less than 0.01mg / cm^2 every year.			
Environment	Installation location	IEC60364-1 / IEC60664-1 Pollution degree 2, Indoor use only	
	Surrounding Temperature (°C)	Storage / Transportation	-25 – +70
		Non-condensation, non-frozen	
	Rated Humidity (%)	Operation	Max. 95
		Storage / Transportation	Max. 95
		No condense water	
	Air Pressure (kPa)	Operation / Storage	86–106
		Transportation	70–106
	Pollution Level	IEC 60721-3-3	
		Operation	Class 3C3; Class 3S2
		Storage	Class 1C2; Class 1S2
		Transportation	Class 2C2; Class 2S2
		If the AC motor drive is to be used under harsh environment with high level of contamination (e.g. dew, water, dust), make sure it is installed in an environment qualified for IP54 such as in a cabinet.	
	Altitude	Operation	If the AC motor drive is installed at an altitude of 0–1000 m, follow normal operation restrictions. For altitudes of 1000–2000 m, decrease the drive's rated current by 1% or lower the temperature by 0.5°C for every 100 m increase in altitude. The maximum altitude for corner grounding is 2000 m.
Package Drop	Storage	ISTA procedure 1A (according to weight) IEC60068-2-31	
	Transportation		
Vibration	1.0 mm, peak to peak value range from 2 Hz to 13.2 Hz; 0.7–1.0G range from 13.2 Hz to 55 Hz; 1.0G range from 55 Hz to 512 Hz. Comply with IEC 60068-2-6		
Impact	IEC / EN 60068-2-27		
Operation Position	Max. allowed offset angle ±10° (under normal installation position)	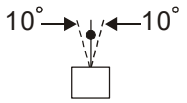	

Table 9-9

9-6 Specification for Operation Temperature and Protection Level

Model	Frame	Top cover	Conduit Box	Protection Level	Operation Temperature
VFDxxxCxxx-21	Frame A–C 230V: 0.75–22 kW 460V: 0.75–30 kW 575V: 1.5~15 kW 690V: 18.5–37 kW	Top cover removed	Standard conduit plate	IP20 / UL Open Type	-10–50°C
		Standard with top cover		IP20 / UL Type1 / NEMA1	-10–40°C
VFDxxxCxxx-21	Frame D0–H 230V: ≥ 22 kW 460V: ≥ 37 kW 690V: ≥ 45 kW	N/A	Standard conduit box	IP20 / UL Type1 / NEMA1	-10–40°C
VFDxxxCxxx-00	Frame D0–H 230V: ≥ 22 kW 460V: ≥ 37 kW 690V: ≥ 45 kW	N/A	No conduit box	IP00 IP20 / UL Open Type 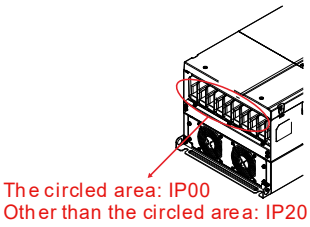 Figure 9-1	-10–50°C

Table 9-10

9-7 Derating Curve

☑ For more information on calculation for derating curve, refer to Pr.06-55.

☑ When choosing the correct model, consider factors such as ambient temperature, altitude, carrier frequency, control mode, and so on. That is,
Actual rated current for application (A) = Rated output current (A) x Ambient temp. rated derating (%) x Altitude rated derating (%) x [Normal / Advanced control] carrier frequency rated derating (%)

Protection Level	Operating Environment
UL Type I / IP20	230V / 460V: If the AC motor drive operates at the rated current, the ambient temperature needs to be between -10–40°C. If the temperature is above 40°C, decrease 2% of the rated current for every 1°C increase in temperature. The maximum allowable temperature is 60°C. 575V / 690V: If the AC motor drive operates at the rated current, the ambient temperature needs to be between -10–40°C. If the temperature is above 40°C, decrease 2.5% of the rated current for every 1°C increase in temperature. The maximum allowable temperature is 60°C.
UL Open Type / IP20	230V / 460V: If the AC motor drive operates at the rated current, the ambient temperature needs to be between -10–50°C. If the temperature is above 50°C, decrease 2% of the rated current for every 1°C increase in temperature. The maximum allowable temperature is 60°C. 575V / 690V: If the AC motor drive operates at the rated current, the ambient temperature needs to be between -10–50°C. If the temperature is above 50°C, decrease 2.5% of the rated current for every 1°C increase in temperature. The maximum allowable temperature is 60°C.

Table 9-11

Ambient Temperature Derating Curve

230V / 460V

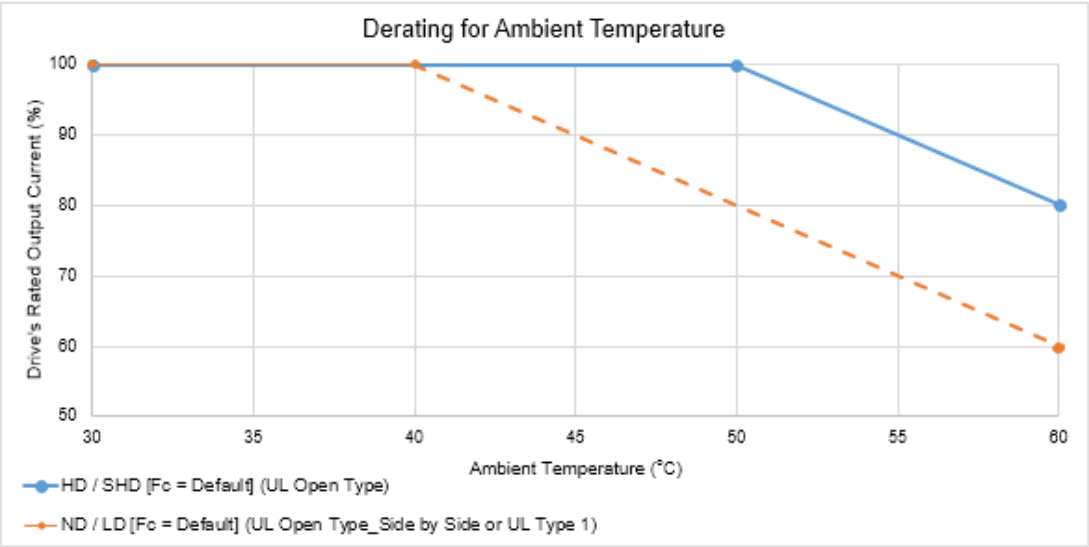

Figure 9-2

UL Open Type:

The rated output current derating (%) in normal duty / light duty / heavy duty when carrier frequency is the default value:

Ambient Temp. / 100% Load Fc (kHz)	30°C	50°C	60°C
Default Value	100	100	80

Table 9-12

UL Open Type_Side by Side or UL Type 1:

The rated output current derating (%) in normal duty / light duty when carrier frequency is the default value:

Ambient Temp. / 100% Load Fc (kHz)	30°C	40°C	60°C
Default Value	100	100	60

Table 9-13

575V / 690V

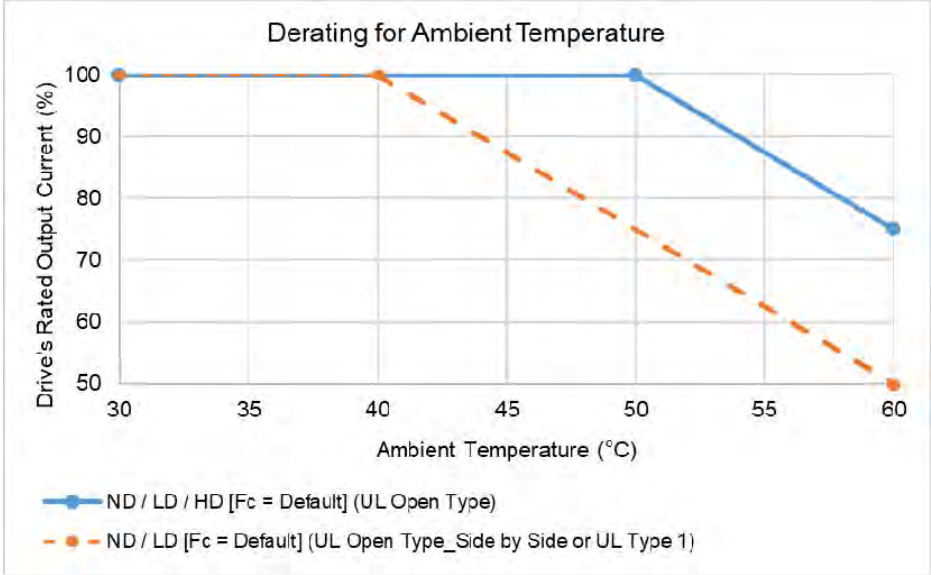

Figure 9-3

UL Open Type:

The rated output current derating (%) in normal duty / light duty / heavy duty when carrier frequency is the default value:

Ambient Temp. / 100% Load Fc (kHz)	30°C	50°C	60°C
Default Value	100	100	75

Table 9-14

UL Open Type_Side by Side or UL Type 1:

The rated output current derating (%) in normal duty / light duty when carrier frequency is the default value:

Ambient Temp. / 100% Load Fc (kHz)	30°C	40°C	60°C
Default Value	100	100	50

Table 9-15

Altitude Derating Curve

Condition	Operating Environment
High Altitude	If the AC motor drive is installed at an altitude of 0–1000 m, follow normal operation restrictions. For altitudes of 1000–2000 m, decrease the drive's rated current by 1% or lower the temperature by 0.5°C for every 100 m increase in altitude. The maximum altitude for corner grounding is 2000 m. If installing at an altitude higher than 2000 m is required, contact Delta for more information.

Table 9-16

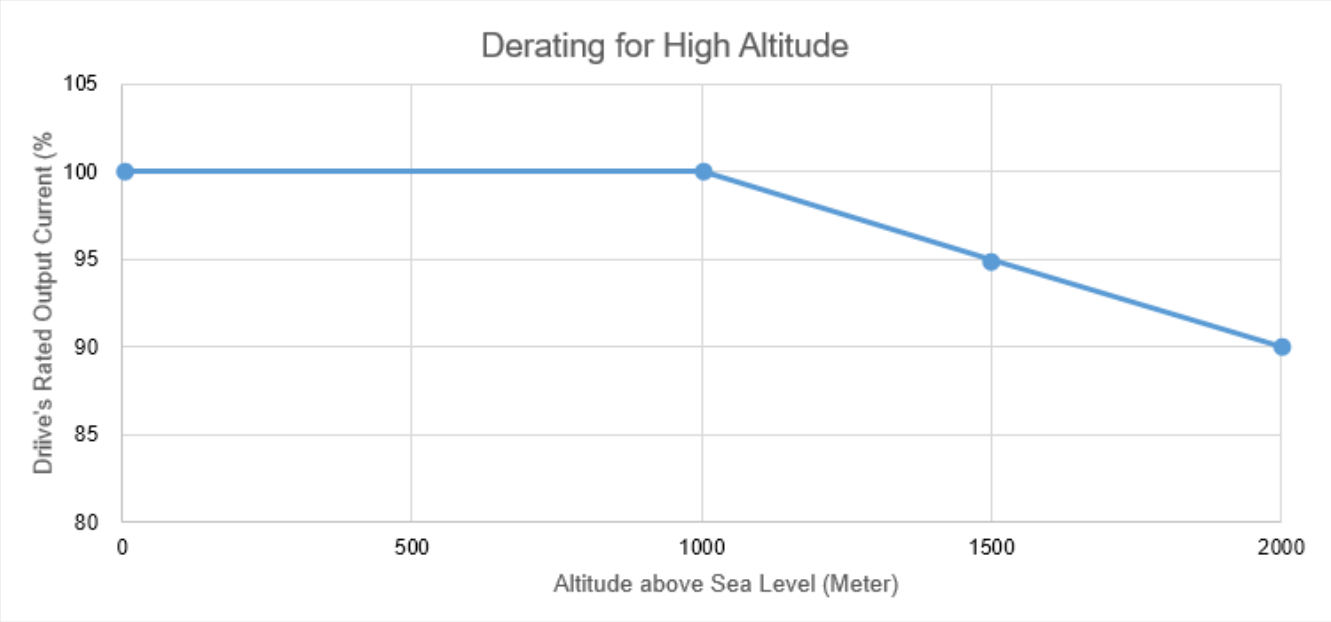

Figure 9-4

The rated output current derating (%) for different altitudes above sea level:

Altitude above Sea Level (Meter)	0	1000	1500	2000	2000	2000
Output Current / Rated Current (%)	100	100	95	90	85	80

Table 9-17

Carrier Frequency Derating Curve

- 230V / 460V Normal Control

  Pr.00-11 = 0 (IMVF)

  = 1 (IMVFPG)

  = 2 (IM SVC, Pr.05-33 = 0)

  = 3 (IMFOCPG)

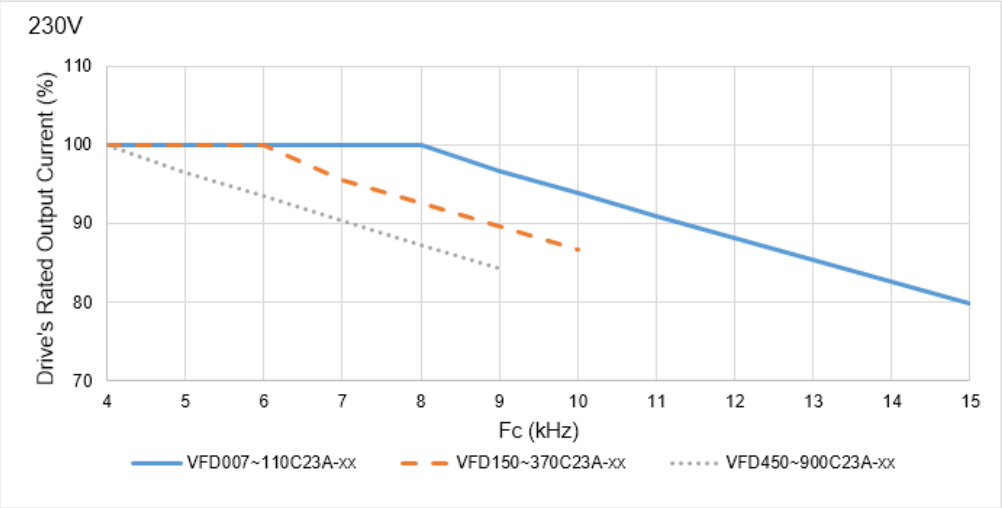

Figure 9-5

The rated output current derating (%) of 230V models in normal control mode for different carrier frequencies:

Fc (kHz) / Model No.	4	5	6	7	8	9	10	11	12	13	14	15
VFD007~110C23A-xx	100	100	100	100	100	97	94	91	88	85	83	80
VFD150~370C23A-xx	100	100	100	96	93	90	87	-	-	-	-	-
VFD450~900C23A-xx	100	97	93	90	87	84	-	-	-	-	-	-

Table 9-18

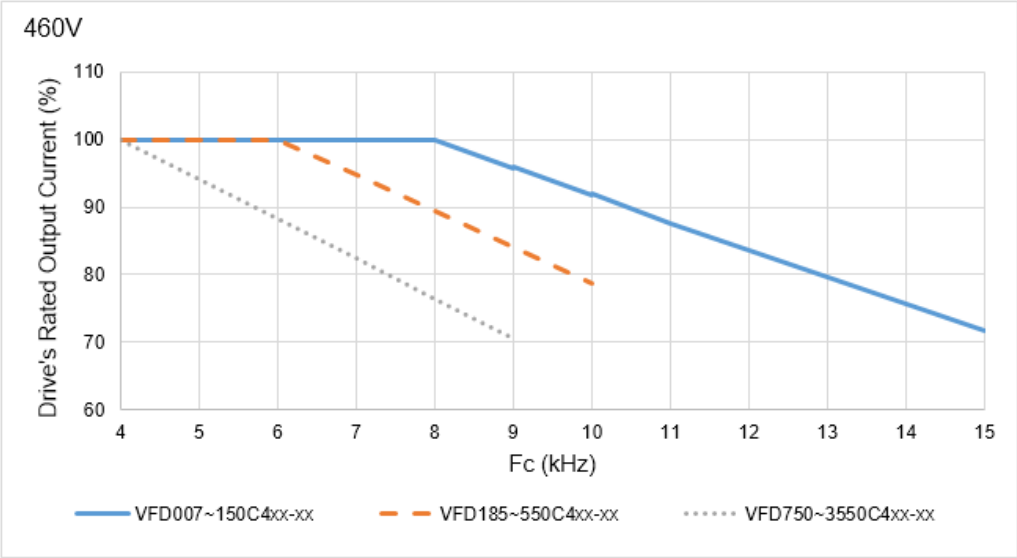

Figure 9-6

The rated output current derating (%) of 460V models in normal control mode for different carrier frequencies:

Fc (kHz) / Model No.	2	3	4	5	6	7	8	9	10	11	12	13	14	15
VFD007~150C4xx-xx	100	100	100	100	94	88	82	76	71	65	59	53	47	41
VFD185~550C4xx-xx	100	100	100	92	84	76	68	60	52	-	-	-	-	-
VFD750~3550C4xx-xx	100	92	83	75	67	58	50	42	-	-	-	-	-	-

Table 9-19

- 230V / 460V Advanced Control

  Pr.00-11 = 2 (PM SVC, Pr.05-33 = 1, 2)
  = 4 (PMFOCPG)
  = 5 (IMFOC Sensorless)
  = 6 (PM Sensorless)
  = 7 (IPM Sensorless)

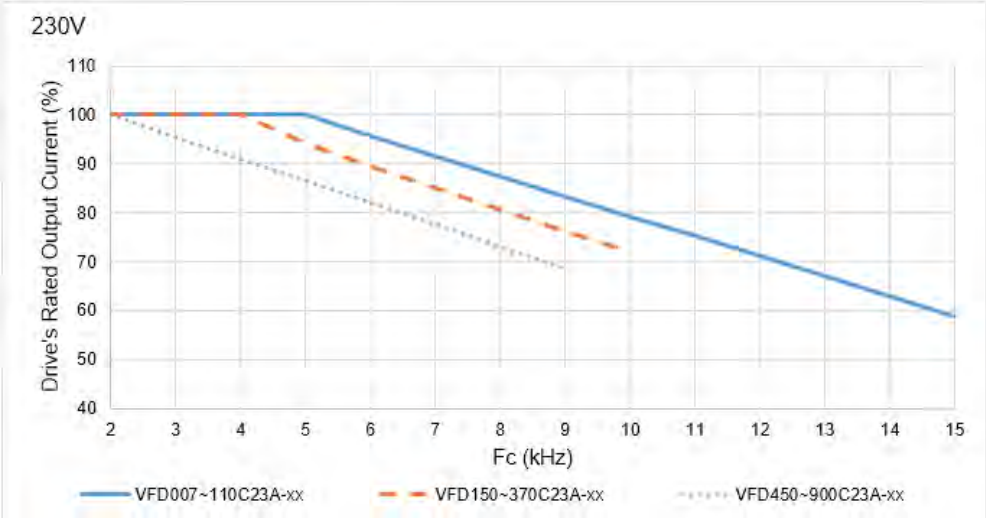

Figure 9-7

The rated output current derating (%) of 230V models in advanced control mode for different carrier frequencies:

Model No. \ Fc (kHz)	2	3	4	5	6	7	8	9	10	11	12	13	14	15
VFD007~110C23A-xx	100	100	100	100	96	92	88	83	79	75	71	67	63	59
VFD150~370C23A-xx	100	100	100	94	90	85	81	76	72	-	-	-	-	-
VFD450~900C23A-xx	100	96	91	87	82	78	73	69	-	-	-	-	-	-

Table 9-20

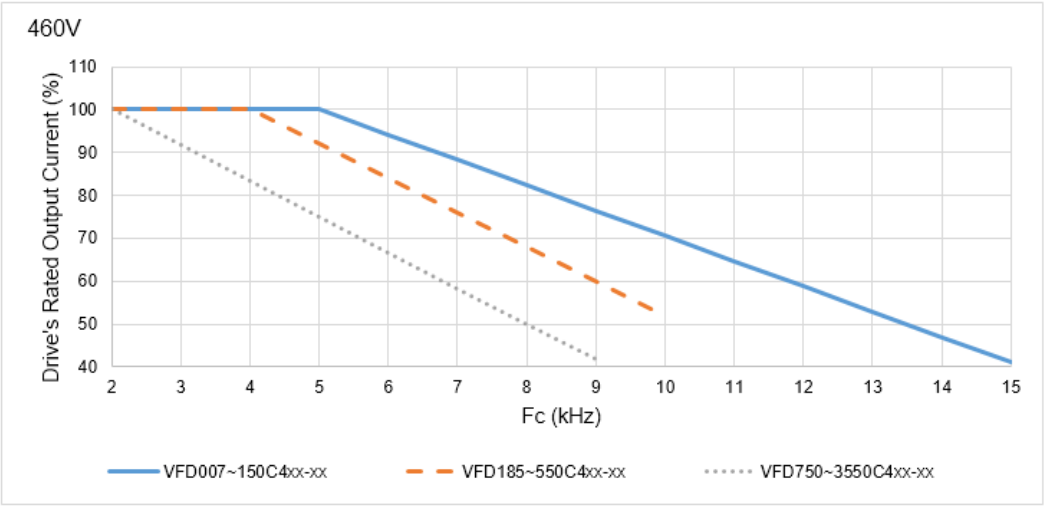

Figure 9-8

The rated output current derating (%) of 460V models in advanced control mode for different carrier frequencies:

Model No. \ Fc (kHz)	2	3	4	5	6	7	8	9	10	11	12	13	14	15
VFD007~150C4xx-xx	100	100	100	100	94	88	82	76	71	65	59	53	47	41
VFD185~550C4xx-xx	100	100	100	92	84	76	68	60	52	-	-	-	-	-
VFD750~3550C4xx-xx	100	92	83	75	67	58	50	42	-	-	-	-	-	-

Table 9-21

- 575V / 690V

  Pr.00-16 = 2, light duty:

  Pr.00-11 = 0 (IMVF)

  = 1 (IMVFPG)

  = 2 (IM SVC, Pr.05-33 = 0)

  = 3 (IMFOCPG)

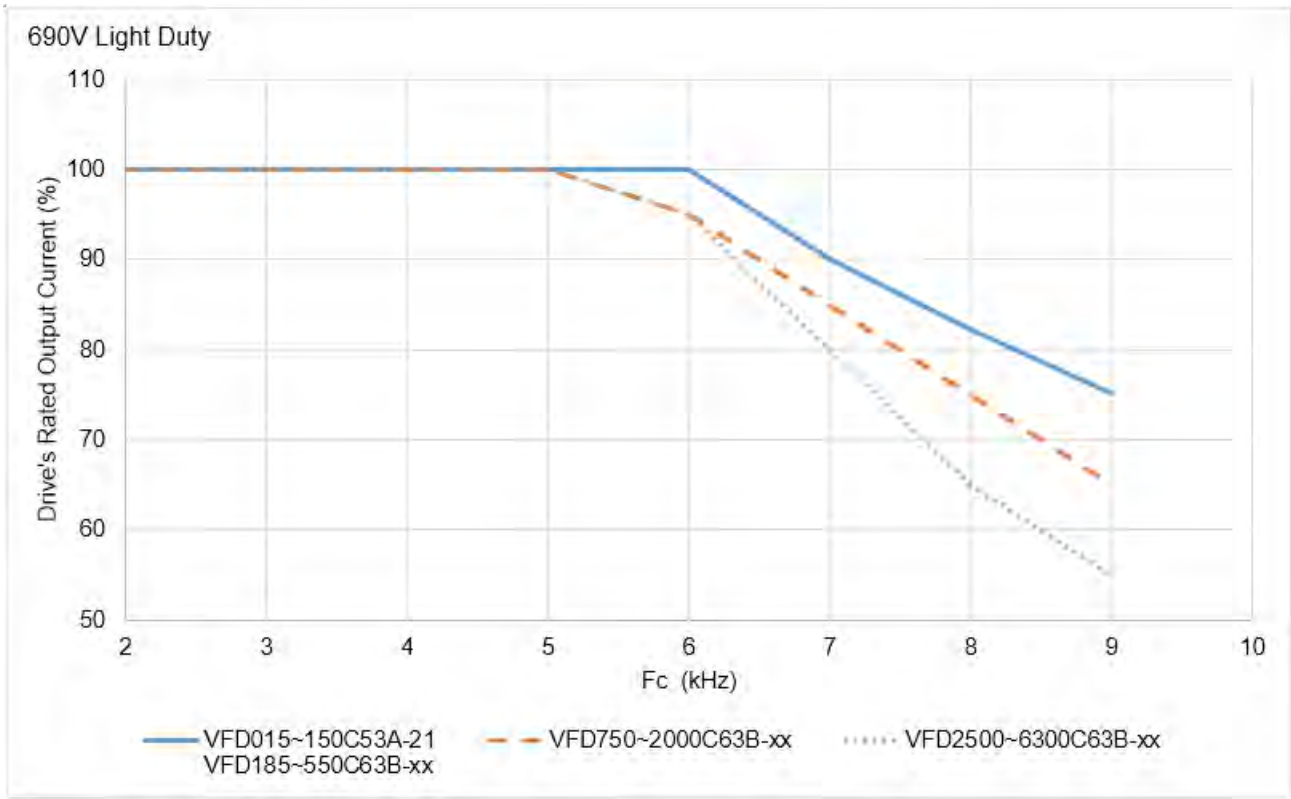

Figure 9-9

The rated output current derating (%) of 575V / 690V models in light duty for different carrier frequencies:

Fc (kHz) / Model No.	2	3	4	5	6	7	8	9
VFD015~150C53A-21 VFD185~550C63B-xx	100	100	100	100	100	90	82	75
VFD750~2000C63B-xx	100	100	100	100	95	85	75	65
VFD2500~6300C63B-xx	100	100	100	100	95	80	65	55

Table 9-22

Pr.00-16 = 0, normal duty:

Pr.00-11 = 0 (IMVF)

= 1 (IMVFPG)

= 2 (IM SVC, Pr.05-33 = 0)

= 3 (IMFOCPG)

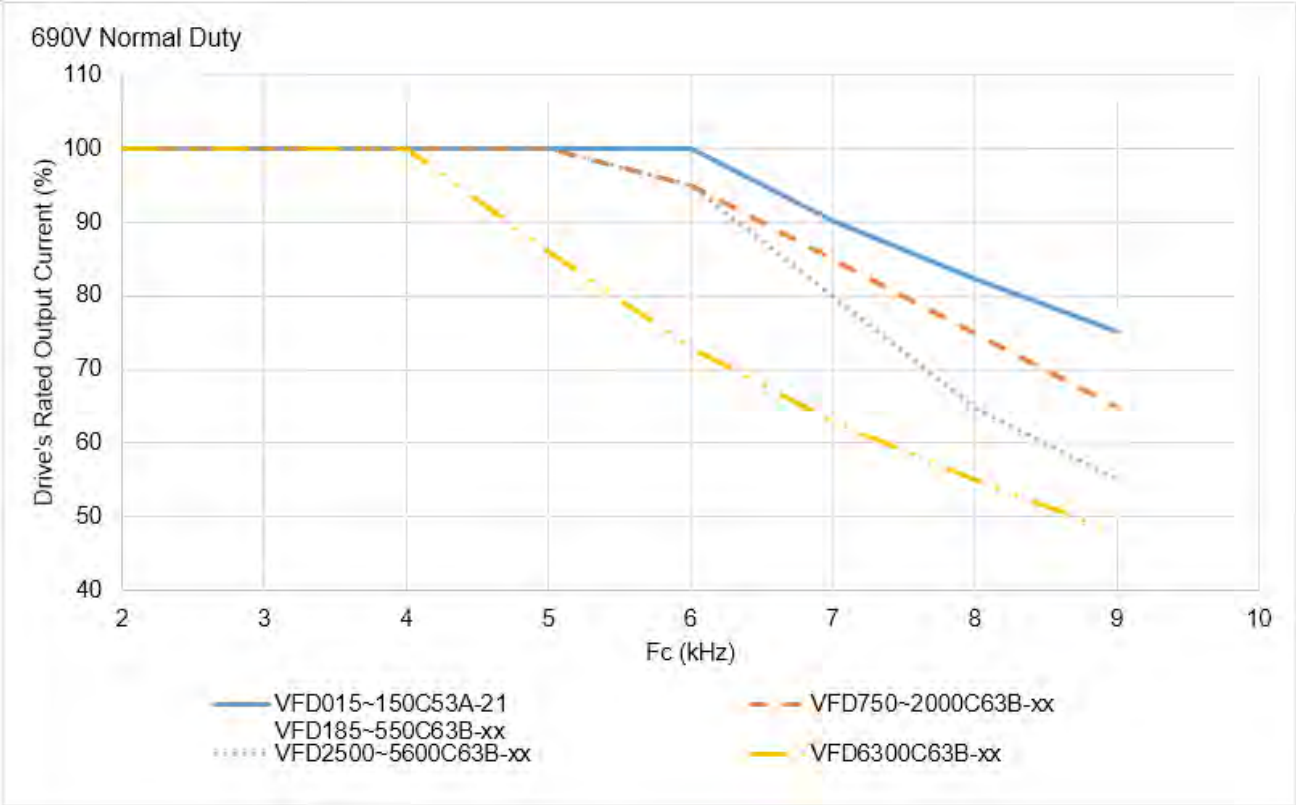

Figure 9-10

The rated output current derating (%) of 575V / 690V models in normal duty for different carrier frequencies:

Fc (kHz) / Model No.	2	3	4	5	6	7	8	9
VFD015~150C53A-21 VFD185~550C63B-xx	100	100	100	100	100	90	82	75
VFD750~2000C63B-xx	100	100	100	100	95	85	75	65
VFD2500~5600C63B-xx	100	100	100	100	95	80	65	55
VFD6300C63B-xx	100	100	100	86	73	63	55	48

Table 9-23

Pr.00-16 = 1, heavy duty:

Pr.00-11 = 0 (IMVF)

= 1 (IMVFPG)

= 2 (IM SVC, Pr.05-33 = 0)

= 3 (IMFOCPG)

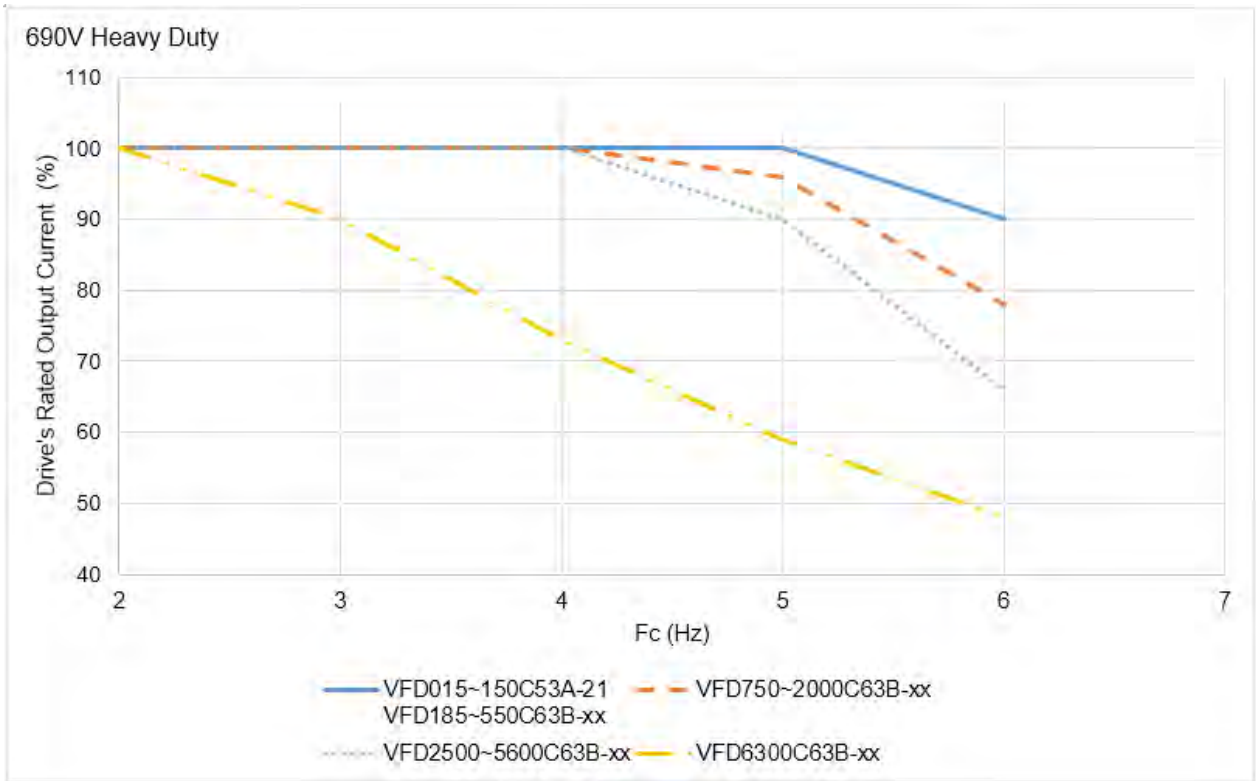

Figure 9-11

The rated output current derating (%) of 575V / 690V models in heavy duty for different carrier frequencies:

Fc (kHz) / Model No.	2	3	4	5	6
VFD015~150C53A-21 VFD185~550C63B-xx	100	100	100	100	90
VFD750~2000C63B-xx	100	100	100	96	78
VFD2500~5600C63B-xx	100	100	100	90	66
VFD6300C63B-xx	100	90	73	59	48

Table 9-24

9-8 Efficiency Curve

- Models:
  VFD007~370C23A-xx
  VFD007~750C4xx-xx

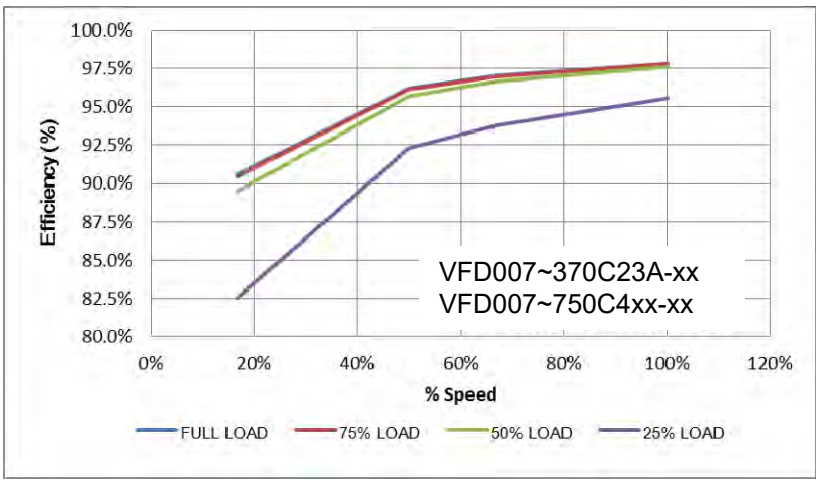

Figure 9-12

Efficiency (%) under different loads:

Load (%) \ Speed (%)	16.7	50	66.7	100
100% Load	90.6	96.2	97.0	97.8
75% Load	90.4	96.1	96.9	97.8
50% Load	89.5	95.7	96.6	97.6
25% Load	82.5	92.3	93.8	95.5

Table 9-25

- Models:
  VFD450~900C23A-xx
  VFD900~5600C4xx-xx

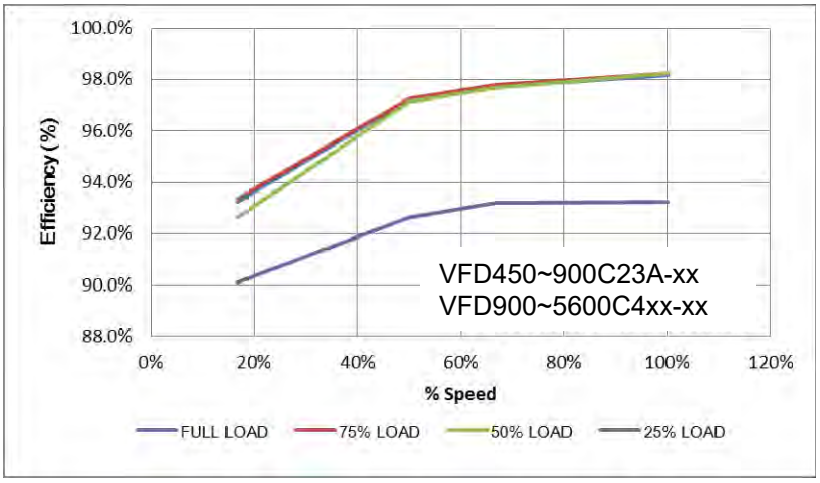

Figure 9-13

Efficiency (%) under different loads:

Load (%) \ Speed (%)	16.7	50	66.7	100
100% Load	93.2	97.2	97.7	98.2
75% Load	93.4	97.3	97.8	98.3
50% Load	92.6	97.1	97.7	98.2
25% Load	90.1	92.6	93.2	93.2

Table 9-26

- Models:
  VFD055~150C53A-21
  VFD2500~4500C63B-xx

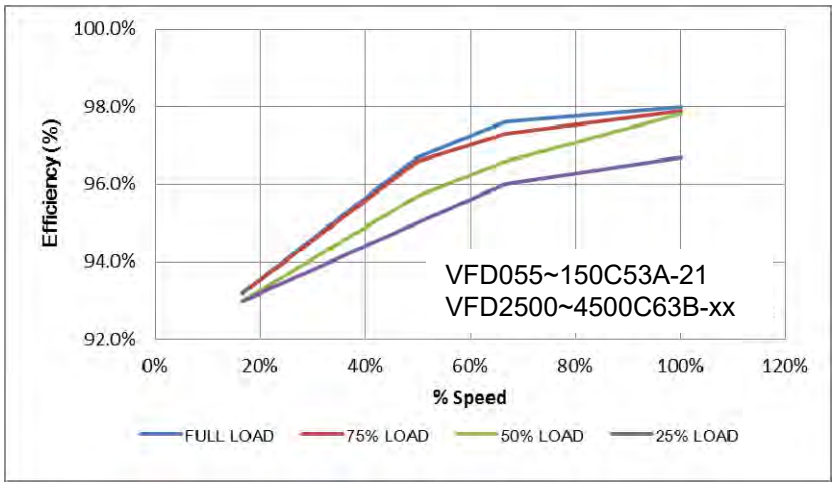

Figure 9-14

Efficiency (%) under different loads:

Speed (%) / Load (%)	16.7	50	66.7	100
100% Load	93.2	96.7	97.6	98
75% Load	93.2	96.6	97.3	97.9
50% Load	93	95.7	96.6	97.8
25% Load	93	95	96	96.7

Table 9-27

- Models:
  VFD015~037C53A-21
  VFD185~2000C63B-xx

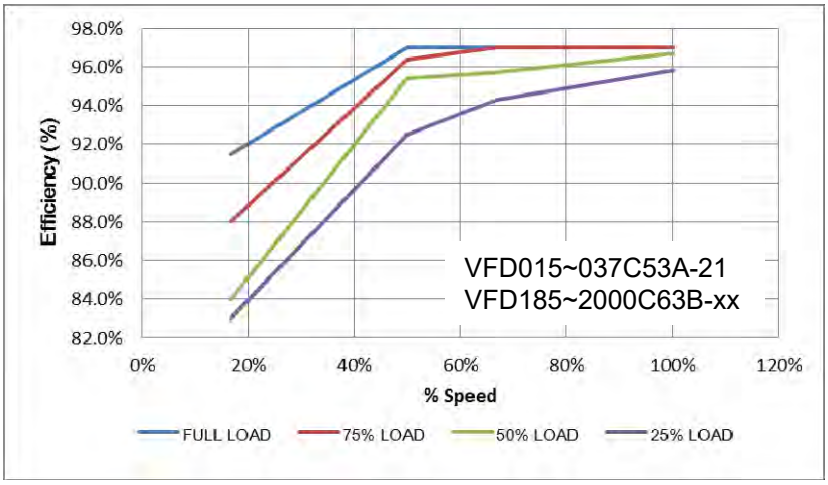

Figure 9-15

Efficiency (%) under different loads:

Speed (%) / Load (%)	16.7	50	66.7	100
100% Load	91.5	97	97	97
75% Load	88	96.4	97	97
50% Load	84	95.4	95.7	96.7
25% Load	83	92.5	94.3	95.8

Table 9-28

[This page intentionally left blank]

Chapter 10 Digital Keypad

10-1 Descriptions of Digital Keypad

10-2 Function of Digital Keypad KPC-CC01

10-3 TPEditor Installation Instruction

10-4 Fault Code Description of Digital Keypad KPC-CC01

10-5 Unsupported Functions when using TPEditor on KPC-CC01 Keypad

10-1 Descriptions of Digital Keypad

KPC-CC01

Communication Interface
RJ45 (socket), RS-485 interface

Communication protocol:
RTU19200, 8, N, 2

Installation Method
1. The embedded type can be installed flat on the surface of the control box. The front cover is waterproof.
2. Buy a MKC-KPPK model for wall mounting or embedded mounting. Its protection level is IP66.
3. The maximum RJ45 extension lead is 5 m (16ft).
4. This keypad can only be used on Delta's motor drive C2000 series, CH2000 and CP2000 series.

Keypad Function Description

Key	Descriptions
RUN	Start Operation Key 1. Only valid when the source of operation command is the keypad. 2. Operates the AC motor drive by the function setting. The RUN LED will be ON. 3. Can be pressed repeatedly at the stop process.
STOP RESET	Stop Command Key. 1. This key has the highest priority when the command is from the keypad. 2. When it receives the STOP command, regarless of whether the AC motor drive is in operation or stop status, the AC motor drive executes the "STOP" command. 3. Use the RESET key to reset the drive after a fault occurs. 4. If you cannot reset after the error: a. The condition which triggers the fault is not cleared. After you clear the condition, you can then reset the fault. b. The drive is in fault status when powered on. After you clear the condition, restart and then you can reset the fault.
FWD REV	Operation Direction Key 1. Only controls the operation direction, NOT the drive activation. FWD: forward, REV: reverse. 2. Refer to the LED descriptions for more details.
ENTER	ENTER Key Goes to the next menu level. If at the last level, press ENTER to execute the command.
ESC	ESC Key Leaves the current menu and returns to the previous menu; also functions as a return key or cancel key in a sub-menu.
MENU	Returns to the main menu. Menu commands: 1. Parameter Setup 2. Quick Start 3. Application Selection List 4. Changed List 5. Copy Parameter 6. Fault Record 7. Language Setup 8. Time Setup 9. Keypad Locked 10. PLC Function 11. Copy PLC 12. Display Setup 13. Start-up Menu 14. Main Page 15. PC Link 16. Start Wizard
^ v < >	Direction: Left / Right / Up / Down 1. In the numeric value setting mode, moves the cursor and changes the numeric value. 2. In the menu / text selection mode, selects an item.

Key	Descriptions
F1 F2 F3 F4	Function Key 1. The functions keys have defaults and can also be use-defined. The defaults for F1 and F4 work with the function list below. For example, F1 is the JOG function, and F4 is a speed setting key for adding / deleting user-defined parameters. 2. Other functions must be defined using TPEditor. Download TPEditor software at Delta website. Select TPEditor version 1.60 or above. Refer to the installation instruction for TPEditor in Section 10-3.
HAND	HAND Key 1. Use this key to select HAND mode. In this mode, the drive's parameter settings for frequency command source is Pr.00-30, and that for operation command source is Pr.00-31. 2. Press the HAND key at STOP, then the setting switches to the HAND frequency source and HAND operation source. 3. Press HAND key at RUN, and it stops the AC motor drive first (displays AHSP warning), and switches to HAND frequency source and HAND operation source. 4. Successful mode switching for the KPC-CC01 displays HAND mode on the screen.
AUTO	AUTO Key 1. The default of the drive is AUTO mode. 2. Use this key to select AUTO mode. In this mode, the drive's parameter settings for frequency command source is Pr.00-20, and that for operation command is Pr.00-21. 3. Press the AUTO key at STOP, then the setting switches to the AUTO frequency source and AUTO operation source. 4. Press AUTO key at RUN, and it stops the AC motor drive first (displays AHSP warning), and switches to AUTO frequency source and AUTO operation source. 5. Successful mode switching for the KPC-CC01 displays AUTO mode on the screen

NOTE The defaults for the frequency command and operation command source of HAND / AUTO mode are both from the keypad.

LED Functions Descriptions

LED	Descriptions
STOP RESET	Steady ON: STOP indicator for the AC motor drive. Blinking: the drive is in standby. Steady OFF: the drive does not execute the "STOP" command.
FWD REV	Operation Direction LED 1. Green light: the drive is running forward. 2. Red light: the drive is running backward. 3. Flashing light: the drive is changing direction. Operation Direction LED under Torque Mode 1. Green light: when the torque command ≥ 0, and the motor is running forward. 2. Red light: when the torque command < 0, and the motor is running backward. 3. Flashing light: when the torque command < 0, and the motor is running forward.

<table>
<tr><th>LED</th><th>Descriptions</th></tr>
<tr><td>CANopen–RUN</td><td>RUN LED:
<table>
<tr><th>LED status</th><th>Condition / State</th></tr>
<tr><td>OFF</td><td>CANopen at initial state
No LED</td></tr>
<tr><td>Flashing</td><td>CANopen at pre-operation state
 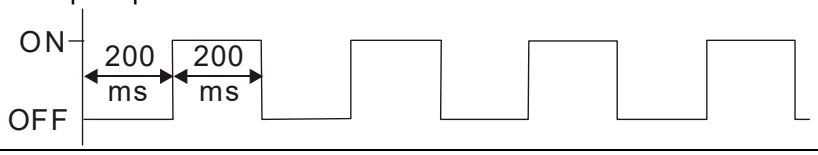
</td></tr>
<tr><td>Single flash</td><td>CANopen at stopped state
 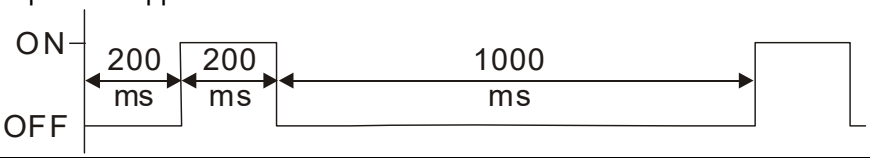
</td></tr>
<tr><td>ON</td><td>CANopen at operational state
</td></tr>
</table></td></tr>
<tr><td>CANopen–ERR</td><td>ERR LED:
<table>
<tr><th>LED status</th><th>Condition / State</th></tr>
<tr><td>OFF</td><td>No failure</td></tr>
<tr><td>Single flash</td><td>At least one packet of CANopen is in failure
 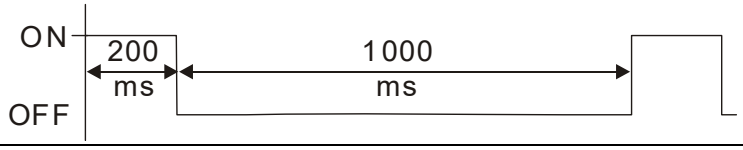
</td></tr>
<tr><td>Double flash</td><td>Node guarding failure or heartbeat message failure
 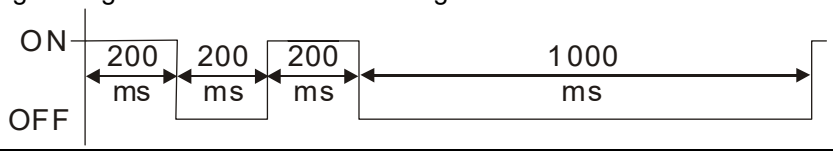
</td></tr>
<tr><td>Triple flash</td><td>Synchronization failure
 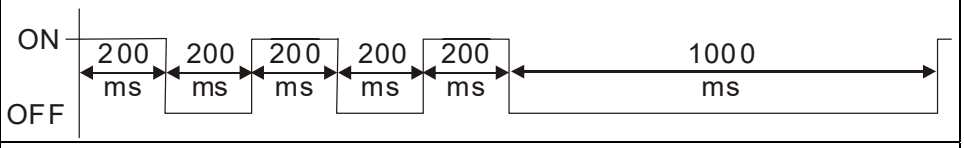
</td></tr>
<tr><td>ON</td><td>Bus off
</td></tr>
</table></td></tr>
</table>

10-2 Function of Digital Keypad KPC-CC01

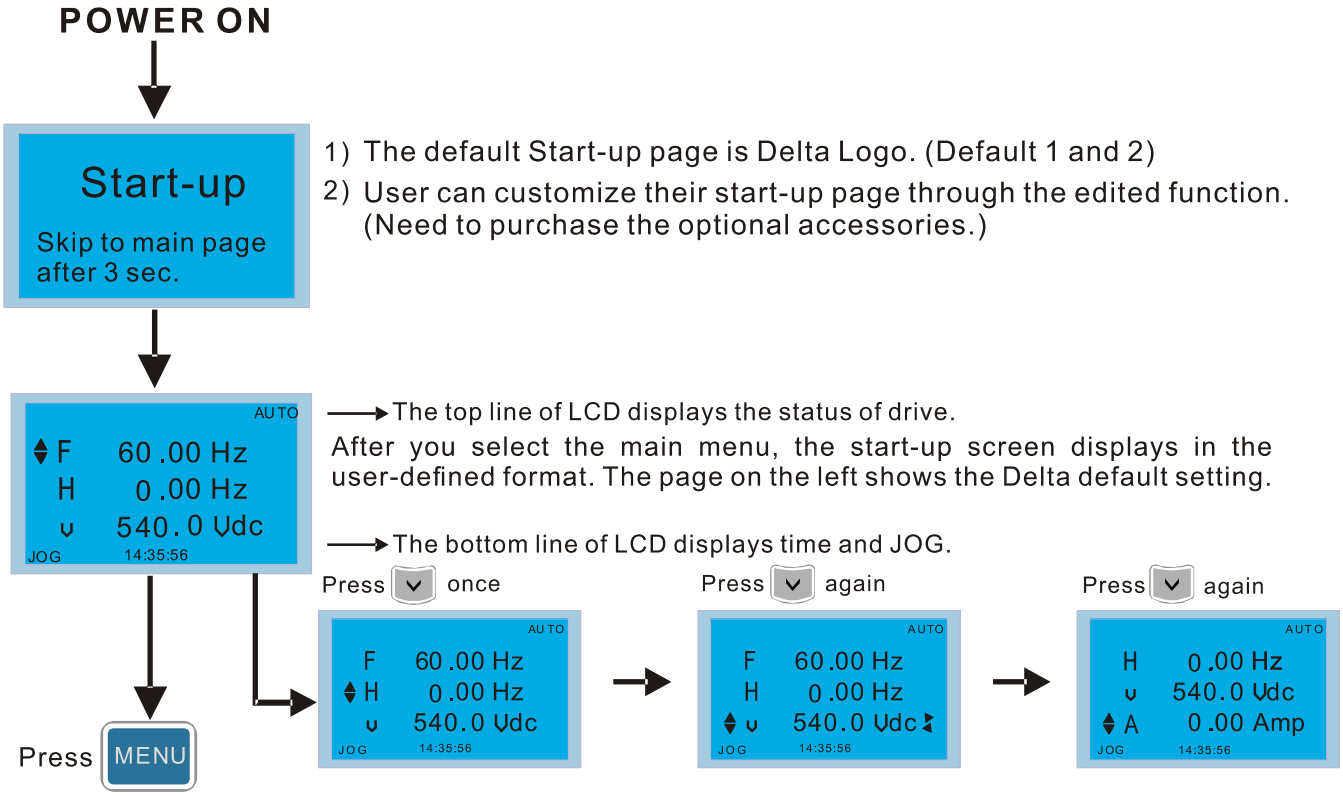

1) The default Start-up page is Delta Logo. (Default 1 and 2)
2) User can customize their start-up page through the edited function. (Need to purchase the optional accessories.)

The top line of LCD displays the status of drive.

After you select the main menu, the start-up screen displays in the user-defined format. The page on the left shows the Delta default setting.

The bottom line of LCD displays time and JOG.

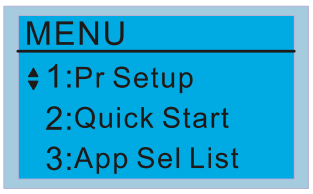

MENU

1: Parameter Setup
2: Quick Start
3: Application Selection List
4: Changed List
5: Copy Parameter
6: Fault Record
7: Language Setup
8: Time Setup
9: Keypad Locked
10: PLC Function
11: Copy PLC
12: Display Setup
13: Start-up Menu
14: Main Page
15: PC Link
16: Start Wizard

NOTE

1. Start-up screen can only display pictures, not animation.
2. When powered ON, it displays the start-up screen then the main screen. The main screen displays Delta's default setting F/H/A/U. You can set the display order with Pr.00-03 (Start-up display). When you select the U screen, use the left / right keys to switch between the items, and set the display order for the U screen with Pr.00-04 (User display).

Display Icon

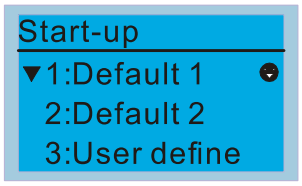

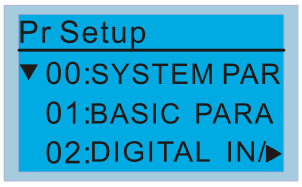

● : present setting

▼ : Scroll down the page for more options

Press ^ v for more options

▶ : show complete sentence

Press < > for complete information

Display item

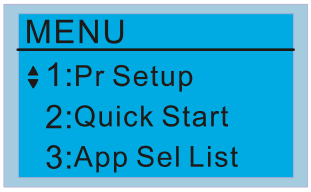

MENU

1: Parameter Setup
2: Quick Start
3: Application Selection List
4: Changed List
5: Copy Parameter
6: Fault Record
7: Language Setup
8: Time Setup
9: Keypad Locked
10: PLC Function
11: Copy PLC
12: Display Setup
13: Start-up Menu
14: Main Page
15: PC Link
16: Start Wizard

1. Parameter Setup

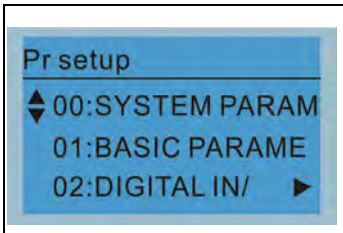

Press ENTER to select.

Press ^ v to select the parameter group.

Once you select a parameter group, press ENTER to go into that group.

For example: Setup source for the master frequency command.

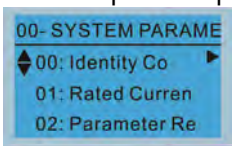

In the Group 00 Motor Drive Parameter, use Up/Down keys to select parameter 20: Auto Frequency Command.

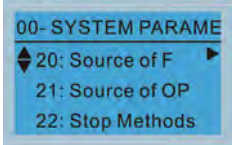

Press ENTER to go to this parameter's setting menu.

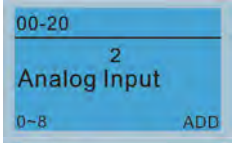

Use the Up/Down keys to choose a setting.
For example: choose 2 Analogue Input, and then press ENTER key.

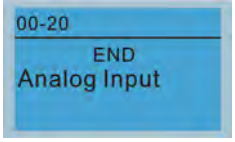

After you press ENTER, END is displayed which means that the parameter setting is done.

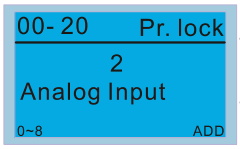

NOTE: When parameter lock / password protection function is enabled, it displays "Pr. lock" on the upper right corner of the keypad. The parameter cannot be written or is protected by the password under this circumstances.

2. Quick Start

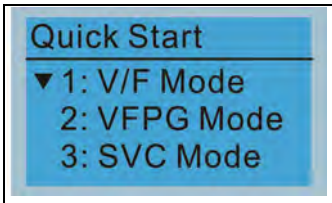

Press ENTER to select.

Quick Start:
1. V/F Mode
2. VFPG Mode
3. SVC Mode
4. FOCPG Mode
5. TQCPG Mode
6. My Mode

Description:

1. VF Mode

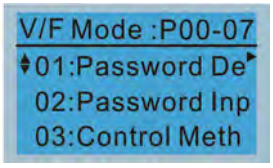

01:Password Decoder

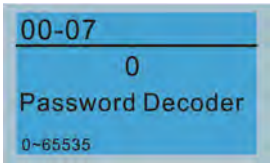

Items
1. Parameter protection password input (Pr.00-07)
2. Parameter protection password setting (Pr.00-08)
3. Control mode (Pr.00-10)
4. Speed control mode (Pr.00-11)
5. Load selection (Pr.00-16)
6. Carrier frequency (Pr.00-17)
7. Master frequency command source / Source selection of the PID target (AUTO)(Pr.00-20)
8. Operation command source (AUTO) (Pr.00-21)
9. Stop method (Pr.00-22)
10. Digital keypad STOP function (Pr.00-32)
11. Max. operation frequency (Pr.01-00)
12. Output frequency of motor 1 (Pr.01-01)
13. Output voltage of motor 1 (Pr.01-02)
14. Mid-point frequency 1 of motor 1 (Pr.01-03)
15. Min-point voltage 1 of motor 1 (Pr.01-04)
16. Mid-point frequency 2 of motor 1 (Pr.01-05)
17. Mid-point voltage 2 of motor 1 (Pr.01-06)
18. Min. output frequency of motor 1 (Pr.01-07)
19. Min. output voltage of motor 1 (Pr.01-08)
20. Output frequency upper limit (Pr.01-10)
21. Output frequency lower limit (Pr.01-11)
22. Acceleration time 1 (Pr.01-12)
23. Deceleration time 1 (Pr.01-13)
24. Over-voltage stall prevention (Pr.06-01)
25. Derating protection (Pr.06-55)

26. Software brake chopper action level (Pr.07-00)
27. Speed tracking during start-up (Pr.07-12)
28. Emergency stop (EF) & force to stop selection (Pr.07-20)
29. Torque command filter time (Pr.07-24)
30. Slip compensation filter time (Pr.07-25)
31. Torque compensation gain (Pr.07-26)
32. Slip compensation gain (Pr.07-27)

2. VFPG Mode

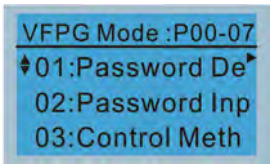

01: Password Decoder

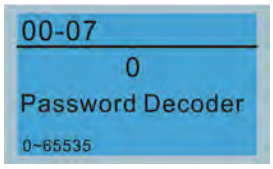

Items
1. Parameter protection password input (Pr.00-07)
2. Parameter protection password setting (Pr.00-08)
3. Control mode (Pr.00-10)
4. Speed control mode (Pr.00-11)
5. Load selection (Pr.00-16)
6. Master frequency command source (AUTO) / Source selection of the PID target (Pr.00-20)
7. Operation command source (AUTO) (Pr.00-21)
8. Stop method (Pr.00-22)
9. Digital keypad STOP function (Pr.00-32)
10. Max. operation frequency (Pr.01-00)
11. Output frequency of motor 1 (Pr.01-01)
12. Output voltage of motor 1 (Pr. 01-02)
13. Min. output frequency of motor 1 (Pr.01-07)
14. Min. output voltage of motor 1 (Pr.01-08)
15. Output frequency upper limit (Pr.01-10)
16. Output frequency lower limit (Pr.01-11)
17. Acceleration time 1 (Pr.01-12)
18. Deceleration time 1 (Pr.01-13)
19. Over-voltage stall prevention (Pr.06-01)
20. Software brake chopper action level (Pr.07-00)
21. Torque command filter time (Pr.07-24)
22. Slip compensation filter time (Pr.07-25)
23. Slip compensation gain (Pr.07-27)
24. Encoder type selection (Pr.10-00)
25. Encoder pulses per revolution (Pr.10-01)
26. Encoder input type setting (Pr.10-02)
27. ASR 1 gain (Pr.11-06)
28. ASR 1 integral time (Pr.11-07)
29. ASR 2 gain (Pr.11-08)
30. ASR 2 integral time (Pr.11-09)
31. ASR gain of zero speed (Pr.11-10)
32. ASR1 integral time of zero speed (Pr.11-11)

3. SVC Mode

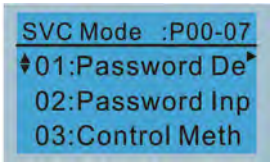

01: Password Decoder

Items
1. Parameter protection password input (Pr.00-07)
2. Parameter protection password setting (Pr.00-08)
3. Control mode (Pr.00-10)
4. Speed control mode (Pr.00-11)
5. Load selection (Pr.00-16)
6. Carrier frequency (Pr.00-17)
7. Master frequency command source (AUTO) / Source selection of the PID target (Pr.00-20)

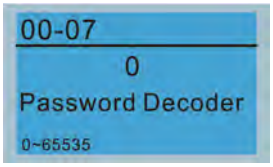

8. Operation command source (AUTO) (Pr.00-21)
9. Stop method (Pr.00-22)
10. Digital keypad STOP function (Pr.00-32)
11. Max. operation frequency (Pr.01-00)
12. Output frequency of motor 1 (Pr.01-01)
13. Output voltage of motor 1 (Pr.01-02)
14. Min. output frequency of motor 1 (Pr.01-07)
15. Min. output voltage of motor 1 (Pr.01-08)
16. Output frequency upper limit (Pr.01-10)
17. Output frequency lower limit (Pr.01-11)
18. Acceleration time 1 (Pr.01-12)
19. Deceleration time 1 (Pr.01-13)
20. Full-load current for induction motor 1 (Pr.05-01)
21. Rated power for induction motor 1 (Pr.05-02)
22. Rated speed for induction motor 1 (Pr.05-03)
23. Number of poles for induction motor 1 (Pr.05-04)
24. No-load current for induction motor 1 (Pr.05-05)
25. Over-voltage stall prevention (Pr.06-01)
26. Over-current stall prevention during acceleration (Pr.06-03)
27. Derating protection (Pr.06-55)
28. Software brake chopper action level (Pr.07-00)
29. Emergency stop (EF) & force to stop selection (Pr.07-20)
30. Torque command filter time (Pr.07-24)
31. Slip compensation filter time (Pr.07-25)
32. Slip compensation gain (Pr.07-27)

4. FOCPG Mode

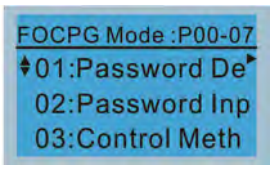

01: Password Decoder

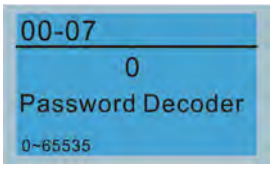

Items

1. Parameter protection password input (Pr.00-07)
2. Parameter protection password setting (Pr.00-08)
3. Control mode (Pr.00-10)
4. Speed control mode (Pr.00-11)
5. Master frequency command source (AUTO) / Source seletion of the PID target (Pr.00-20)
6. Operation command source (AUTO) (Pr.00-21)
7. Stop method (Pr.00-22)
8. Max. operation frequency (Pr.01-00)
9. Output frequency of motor 1 (Pr.01-01)
10. Output voltage of motor 1 (Pr.01-02)
11. Output frequency upper limit (Pr.01-10)
12. Output frequency lower limit (Pr.01-11)
13. Acceleration time 1 (Pr.01-12)
14. Deceleration time 1 (Pr.01-13)
15. Full-load current for induction motor 1 (Pr.05-01)
16. Rated power for induction motor 1 (Pr.05-02)
17. Rated speed for induction motor 1 (Pr.05-03)

18. Number of poles for induction motor 1 (Pr.05-04)
19. No-load current for induction motor 1 (Pr.05-05)
20. Over-voltage stall prevention (Pr.06-01)
21. Over-current stall prevention during acceleration (Pr.06-03)
22. Derating protection (Pr.06-55)
23. Software brake chopper action level (Pr.07-00)
24. Emergency stop (EF) & force to stop selection (Pr.07-20)
25. Encoder type selection (Pr.10-00)
26. Encoder pulses per revolution (Pr.10-01)
27. Encoder input type setting (Pr.10-02)
28. System control (Pr.11-00)
29. Per-unit of system inertia (Pr.11-01)
30. ASR1 low-speed bandwidth (Pr.11-03)
31. ASR2 high-speed bandwidth (Pr.11-04)
32. Zero-speed bandwidth (Pr.11-05)

5. TQCPG Mode

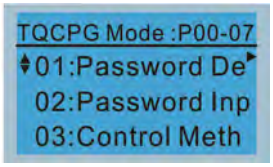

01: Password Decoder

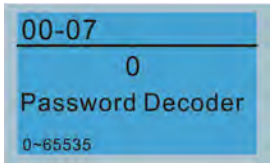

Items

1. Parameter protection password input (Pr.00-07)
2. Parameter protection password setting (Pr.00-08)
3. Control mode (Pr.00-10)
4. Speed control mdoe (Pr.00-11)
5. Master frequency command source (AUTO) / Source selection of the PID target (Pr.00-20)
6. Operation command source (AUTO) (Pr.00-21)
7. Max. operation frequency (Pr.01-00)
8. Output frequency of motor 1 (Pr.01-01)
9. Output voltage of motor 1 (Pr.01-02)
10. Full-load current for induction motor 1 (Pr.05-01)
11. Rated power for induction motor 1 (Pr.05-02)
12. Rated speed for induction motor 1 (Pr.05-03)
13. Number of poles for induction motor 1 (Pr.05-04)
14. No-load current of induction motor 1 (Pr.05-05)
15. Over-voltage stall prevention (Pr.06-01)
16. Software brake chopper action level (Pr.07-00)
17. Encoder type selection (Pr.10-00)
18. Encoder pulses per revolution (Pr.10-01)
19. Encoder input type setting (Pr.10-02)
20. System control (Pr.11-00)
21. Per-unit of system inertia (Pr.11-01)
22. ASR1 low-speed bandwidth (Pr.11-03)
23. ASR2 high-speed bandwidth (Pr.11-04)
24. Zero-speed bandwidth (Pr.11-05)
25. Max. torque command (Pr.11-27)
26. Torque offset source (Pr.11-28)
27. Torque offset setting (Pr.11-29)

28. Torque command source (Pr.11-33)
29. Torque command (Pr.11-34)
30. Speed limit selection (Pr.11-36)
31. Forward speed limit (torque mode) (Pr.11-37)
32. Reverse speed limit (torque mode) (Pr.11-38)

6. My Mode

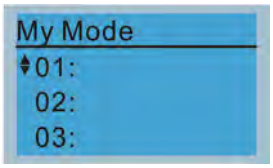

Press F4 in parameter setting screen to save the parameter to My Mode. To delete or correct the parameter, select this parameter and press F4 for DEL in the bottom right corner.

Items

It can save 1–32 sets of parameters (Pr).

Setup process

1. Go to Parameter Setup function.
   Press ENTER to select the parameter to use. There is an ADD on the bottom right corner of the screen. Press F4 to add this parameter to My Mode.

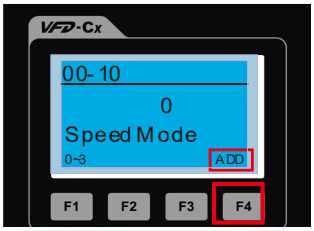

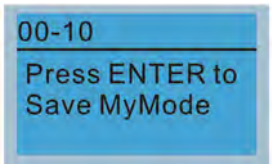

2. The parameter (Pr) displays in My mode if it is properly saved.
   To correct or to delete this parameter, press F4 for DEL.

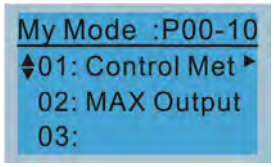

3. To delete a parameter, go to My Mode and select the parameter to delete.
   Press ENTER to enter the parameter setting screen. DEL appears in the bottom left corner of the screen. Press F4 to delete this parameter from My Mode.

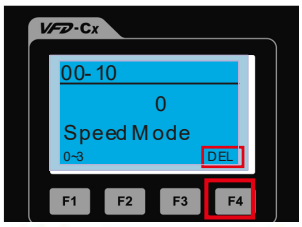

	4. After you press ENTER to delete <01 Control Mode>, the <02 Maximum Operating Frequency > automatically replaces <01 Control Mode>. My Mode :P01-00 01: MAX Output 02: 03:

3. Application Selection List

App Sel List No Function List PrNum =000 ENTER or ESC	This function enables you to select application and its parameters sets. Example: In the menu content, select 3: Application Selection List MENU 1:Pr Setup 2:Quick Start 3:App Sel List Press ENTER to go into the Application Selection List 13-00 0 No Function 0~10 Select Application 13-00 3 Fan 0~10 Press ENTER to enter the application selection screen, and the selected application industry is “Fan”. App Sel List Fan List PrNum =033 ENTER or ESC Press ENTER to enter the Fan application screen. Map to : P00-11 01: Velocity Mo 02: Load Selecti 03: Carrier FREQ Press the Up / Down keys to select the parameter to set. Map to : P00-11 01: Velocity Mo 02: Load Selecti 03: Carrier FREQ Map to : P07-33 31: Momentary Po 32: Auto Restart 33: Reset Resta 00-16 0 Normal Duty 0~1 Choose 0: Normal duty or 1: Heavy duty according to your needs, then press ENTER.

4. Changed List

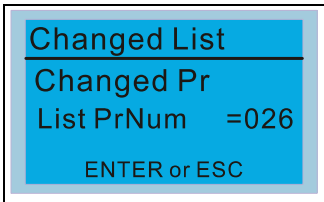

This function records the parameters you have changed.

Example:
Set Pr.13-00 Application Selection = 3: Fan

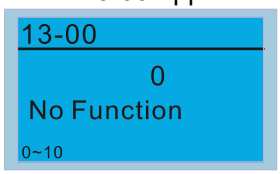

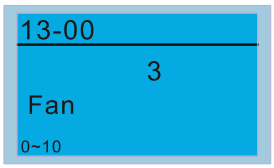

Enter the changed list screen. List PrNum=026 means that there are 26 parameters that have been changed.

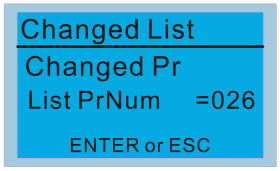

Press ENTER to enter the changed list screen.

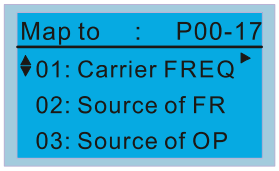

Use the Up / Down keys to select the parameters to check or to change.
Press ENTER to enter the parameter.

5. Copy Parameter

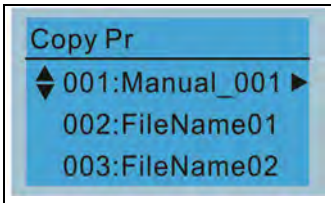

Press ENTER to go to

001–004 content storage

Four groups of parameters are available to copy
The steps are shown in the example below.

Example: parameter saved in the motor drive.

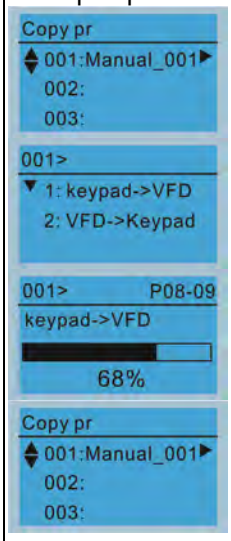

1. Go to Copy Parameter
2. Select the parameter group to copy and press ENTER.

1. Select 1: keypad→VFD
2. Press ENTER to go to the “keypad→VFD” screen.

Begin copying parameters until it is done.

After copying is done, the keypad automatically returns to this screen.

Example: parameter saved in the keypad.

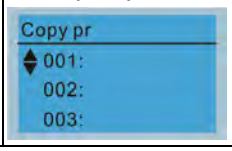

1. Go to Copy parameter
2. Select the parameter group to copy and press ENTER.

	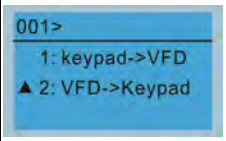 Press ENTER to go to the “VFD→keypad” screen.
	Press the Up / Down keys to select a symbol. Press the Left / Right keys to move the cursor to select a file name.
	String & Symbol Table: ！” ＃＄％＆’ （）＊＋，－．／０１２３４５６７８９：；＜＝＞？@ＡＢＣＤＥＦＧＨＩＪＫＬＭＮＯＰＱＲＳＴＵＶＷＸＹＺ〔＼〕＾＿ ‘ａｂｃｄｆｇｈｉｊｋｌｍｎｏｐｑｒｓｔｕｖｗｘｙｚ｛｜｝～
	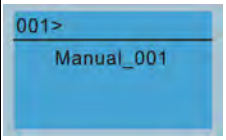 After you confirm the file name, press ENTER.
	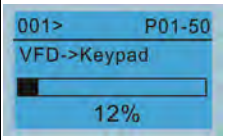 Begin copying parameters until it is done.
	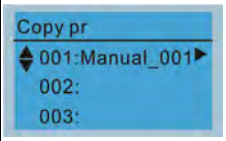 After copying parameters is done, the keypad automatically returns to this screen.
	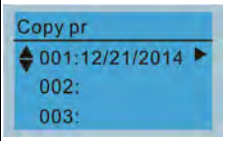 Press the Right key to see the date of the parameters copied.
	Press the Right key to see the time of the parameters copied.

6. Fault Record

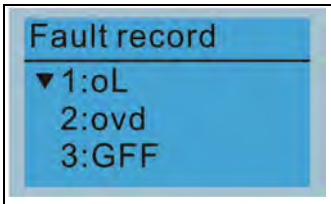 Press ENTER to see an error record’s details.	Able to store 6 error codes (Keypad V1.02 and previous versions) Able to store 30 error codes (Keypad V1.20 and later version) The most recent error record shows as the first record. Choose an error record to see details such as date, time, frequency, current, voltage, and DC bus voltage)
	Press the Up / Down keys to select an error record. Press ENTER to see that error record’s details.
	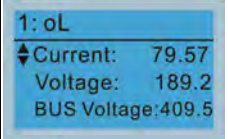 Press the Up / Down keys to scroll through an error record’s details such as date, time, frequency, current, voltage, and DC bus voltage.
	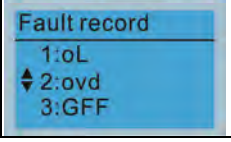 Press the Up / Down keys to select the next error code. After selecting an error code, press ENTER to see that error record’s details.

	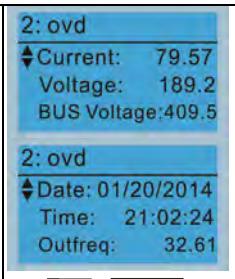 Press the Up / Down keys to see an error record's details such as date, time, frequency, current, voltage, and DC bus voltage. NOTE The AC motor drive actions are recorded and saved to the KPC-CC01. When you remove the KPC-CC01 and connect it to another AC motor drive, the previous fault records are not deleted. The new fault records of the new AC motor drive continue to be added to the KPC-CC01.

7. Language Setup

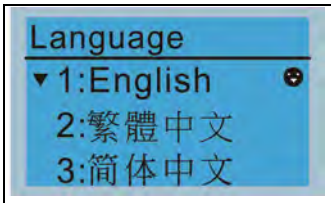 Use the Up / Down keys to select the language, and than press ENTER.	The language setting option is displayed in the language of your choice. Language setting options: 1. English 5. Русский 9. Polski 2. 繁體中文 6. Español 10. Deutsch 3. 简体中文 7. Português 11. Italiano 4. Türkçe 8. Français 12. Svenska

8. Time Setup

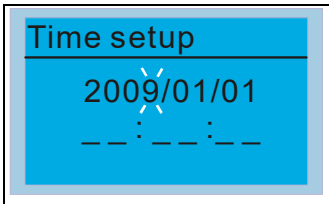 Use the Left / Right keys to select Year, Month, Day, Hour, Minute or Second to change.	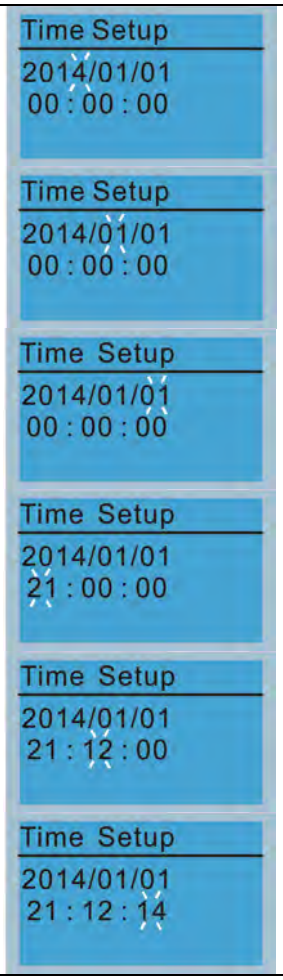 Press the Up / Down keys to set the Year Press the Up / Down keys to set the Month Press the Up / Down keys to set the Day Press the Up / Down keys to set the Hour Press the Up / Down keys to set the Minute Press the Up / Down keys to set the Second

	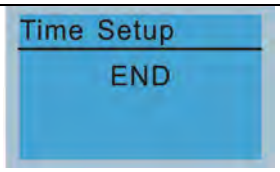 Press ENTER to confirm the Time Setup. NOTE Limitation: The charging process for the keypad super capacitor finishes in about 6 minutes. **When the digital keypad is removed, the time setting is saved for 7 days**. After 7 days, you must reset the time.

9. Keypad Locked

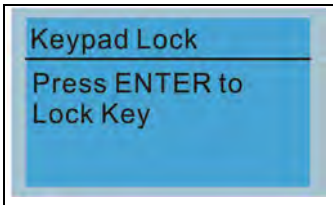 Press ENTER to lock	Lock the keypad Use this function to lock the keypad. The main screen does not display “keypad locked” when the keypad is locked; however, it displays the message ”Press ESC 3 sec to UnLock Key” when you press any key. 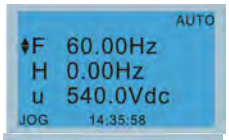 When the keypad is locked, the main screen does not indicate the lock status. 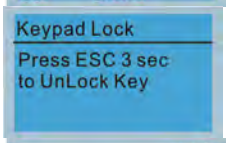 Press any key on the keypad; a message displays as shown on the left. If you do not press the ESC key, the keypad automatically returns to this screen. 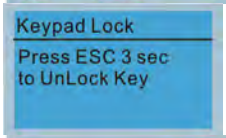 Press any key on the keypad, a message displays as shown on the left. Press ESC for 3 seconds to unlock the keypad; the keypad returns to this screen. All keys on the keypad is functional. All keys on the keypad is functional. Turning the power off and on does not lock the keypad.

10. PLC Function

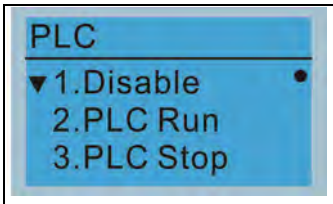 Press the Up /Down keys to select a PLC function, and then press ENTER.	When activating and stopping the PLC function (choosing 2: PLC Run or 3: PLC Stop), the PLC status displays on main screen (Delta default setting). 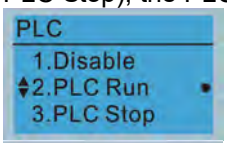 Choose option 2: PLC Run to enable the PLC function. 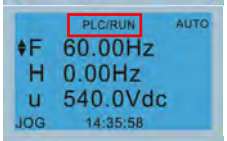 The default on the main screen displays the PLC / RUN status message. 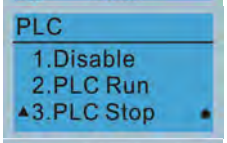 Choose option 3: PLC Stop to disable the PLC function. The default on the main screen displays the PLC / STOP status message.

	PLC/STOP AUTO Warning PLFF Function defect	If the PLC program is not available in the control board, the PLFF warning displays when you choose option 2 or 3. In this case, choose option 1: Disable to clear PLFF warning.

11. Copy PLC

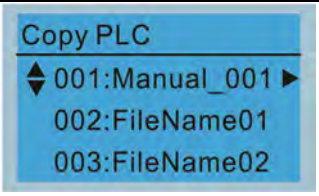

Four groups of parameters are available to copy.
The steps are shown in the example below.

Example: PLC program saved in the motor drive.

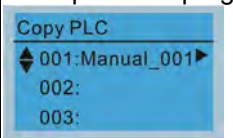

1. Go to Copy PLC
2. Select the PLC program to copy and press ENTER.

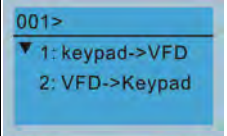

1. Select 1: Keypad→VFD
2. Press ENTER to go to the “Keypad→VFD” screen.

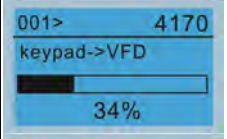

Begin copying the PLC program until it is done.

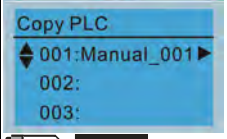

After copying is done, the keypad automatically returns to this screen.

NOTE

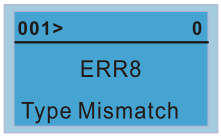

If you select “Option 1: Keypad→VFD”, check if the PLC program is built-in to the KPC-CC01 keypad. If the PLC program is not available in the keypad when you select “Option 1: Keypad→VFD”, an “ERR8 Warning: Type Mismatch” displays on the screen.

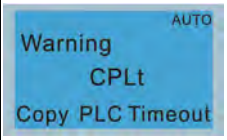

If you unplug the keypad and plug it back while copying the PLC program, the screen displays a CPLt warning.

Example: PLC program saved in the keypad.

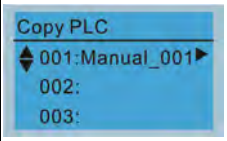

1. Go to Copy PLC.
2. Select the PLC program to copy and press ENTER.

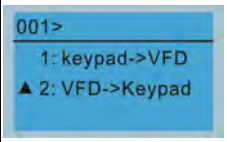

Press ENTER to go to the “VFD→Keypad” screen.

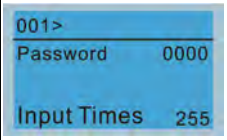

If the WPLSoft editor is installed uses password, enter the password to save the file to the keypad.

Press the Up / Down keys to select a symbol.
Press the Left / Right keys to move the cursor to select a file name.

String & Symbol Table:
！” ＃＄％＆’ （）＊＋，－．／０１２３４５６７８９：；＜＝＞？@ＡＢＣＤＥＦＧＨＩＪＫＬＭＮＯＰＱＲＳＴＵＶＷＸＹＺ〔＼〕＾＿ ‘ａｂｃｄｆｇｈｉｊｋｌｍｎｏｐｑｒｓｔｕｖｗｘｙｚ｛｜｝～

	001> Manual_001	After you confirm the file name, press ENTER.
	001> 2010 VFD->Keypad 12%	Begin copying the PLC program until it is done.
	Copy PLC 001:Manual_001 002: 003:	After copying is done, the keypad automatically returns to this screen.
	Copy PLC 001:12/21/2014 002: 003:	Press the Right key to see the date of the program copied.
	Copy PLC 001:18:38:58 002: 003:	Press the Right key to see the time of program copied.

12. Display setup

Displ Setup ▼1:Contrast 2:Back-Light 3:Text Color	1. Contrast	
Press ENTER to go to the setting screen.	Contrast +0 -20 +20	Press the Up / Down keys to adjust the setting value.
	Contrast +10 -20 +20	For example, increase Contrast to +10.
	Displ Setup ▼1:Contrast 2:Back-Light 3:Text Color	After you set the value, press ENTER to see the screen display after contrast is adjusted to +10.
	Contrast -10 -20 +20	Then press ENTER and decrease the Contrast to -10.
	Displ Setup ▼1:Contrast 2:Back-Light 3:Text Color	Press ENTER to see screen display after contrast is adjusted to -10.
	2. Back-light	
	Displ Setup 1:Contrast 2:Back-Light 3:Text Color	Press ENTER to go to the Back-Light Time Setting screen.
	Back-Light Min 5 0 10	Press the Up / Down keys to adjust the setting value.

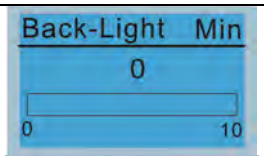

When the setting value is 0 Min, the backlight remains on.

When the setting value is 10 Min, the backlight turns off in 10 minutes.

3. Text Color

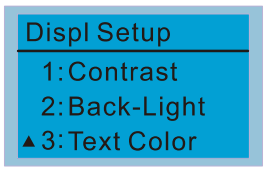

Press ENTER go to the Text Color Setting screen.

The default value is White Text.

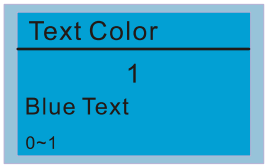

Press the Up / Down keys to adjust the setting value, and then press ENTER.

The setting value changes to Blue Text.

13. Start-up

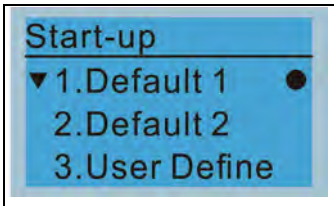

1. Default 1 DELTA LOGO

2. Default 2 DELTA Text

3. User Defined: an optional accessory is required (TPEditor & USB / RS-485 Communication Interface-IFD6530) to design your own start-up screen.
If the editor accessory is not installed, the User Define option displays a blank screen.

USB/RS-485 Communication Interface-IFD6530
Refer to Chapter 07 Optional Accessories for more details.

TPEditor
Download TPEditor software at Delta website. Select TPEditor version 1.60 or above. Refer to the installation instruction for TPEditor in Section 10-3.

14. Main page

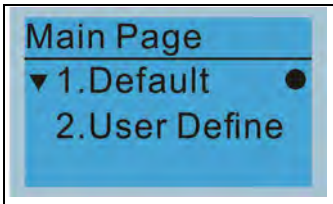

Default screen and editable screen are available.

Press ENTER to select.

1. Default page

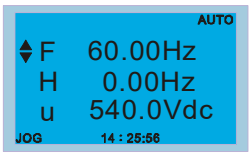

F 60.00Hz >>> H >>> A >>> U (options rotate)

2. User Define: an optional accessory is required (TPEditor & USB / RS-485 Communication Interface-IFD6530) to design your own main screen. If the editor accessory is not installed, the User Define option displays a blank screen.

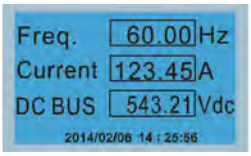

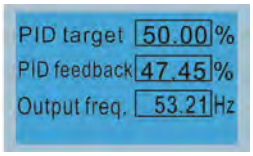

USB/RS-485 Communication Interface-IFD6530

Refer to Chapter 07 Optional Accessories for more details.

TPEditor

Download TPEditor software at Delta website. Select TPEditor version 1.60 or above. Refer to the installation instruction for TPEditor in Section 10-3.

15. PC Link

1. TPEditor: This function enables you to connect the keypad to a computer then download and edit user-defined screens.

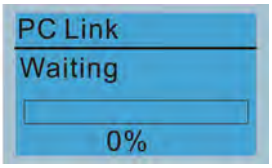

Press ENTER to go to Waiting to connect to PC screen.

In TPEditor, from the **Communication** menu, choose **Write to HMI**.

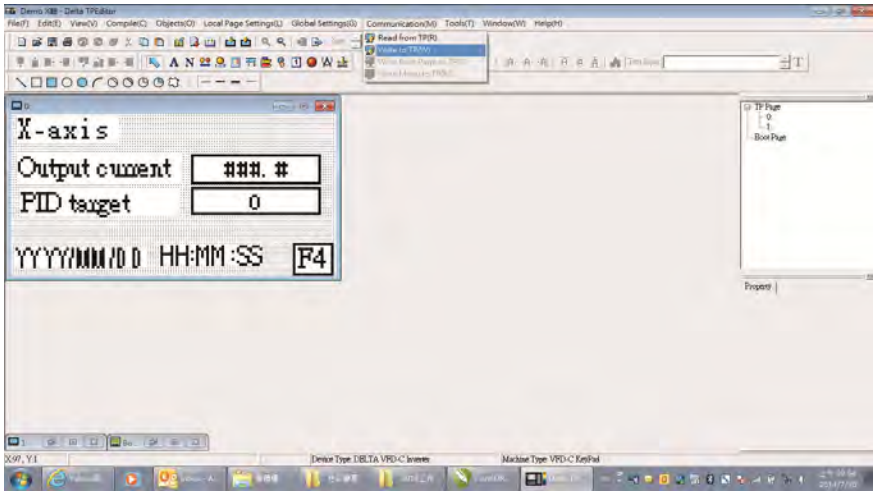

In the **Confirm** message box, click **YES**.

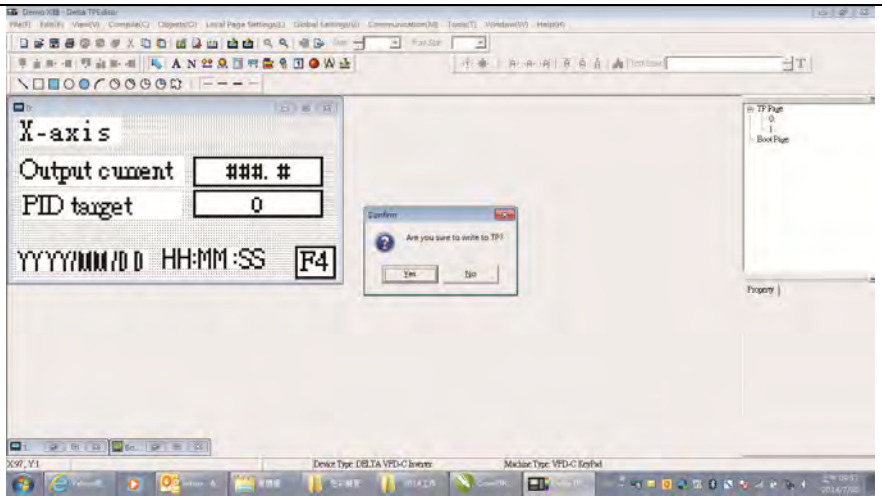

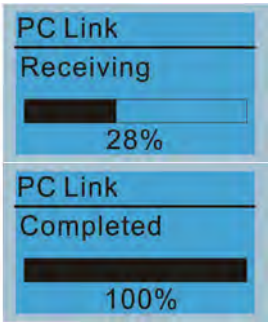

The software starts downloading screens to edit to the KPC-CC01.

Download completed

2. VFDSoft: this function enables you to link to the VFDSoft then upload the parameters 1–4 you have saved in the KPC-CC01.

NOTE

If the Operation System (OS) of your computer is Windows 10, right-click the VFDSoft icon to enter the **Property**. Then, click the **Compatibility** tab and select the **Run this program as an administrator** checkbox. (as shown in the red frames in the figure below)

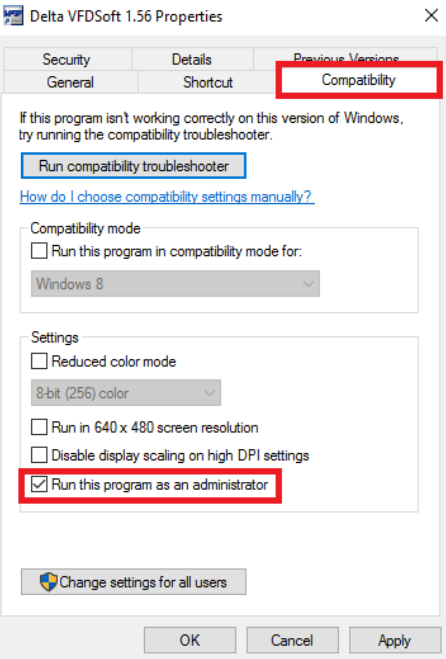

3. Connecting the KPC-CCO1 to a computer

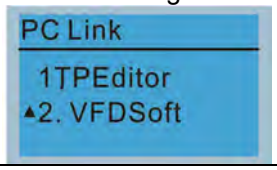

Select 2: VFDSoft, and then press ENTER.

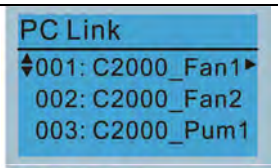

Press the Up / Down keys to select a parameter group to upload to VFDSoft.

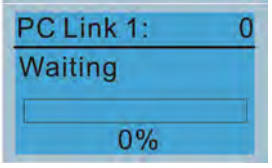

Press ENTER to go to Waiting to connect to PC screen.

Open VFDSoft and click **Parameter** on the toolbar

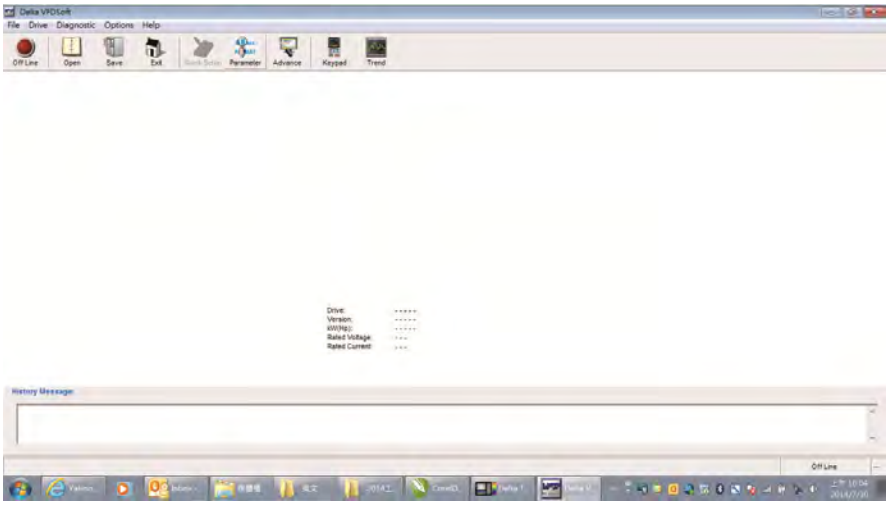

In Parameter Manager, from the **Table** menu, choose **Read from KPC-CC01**.

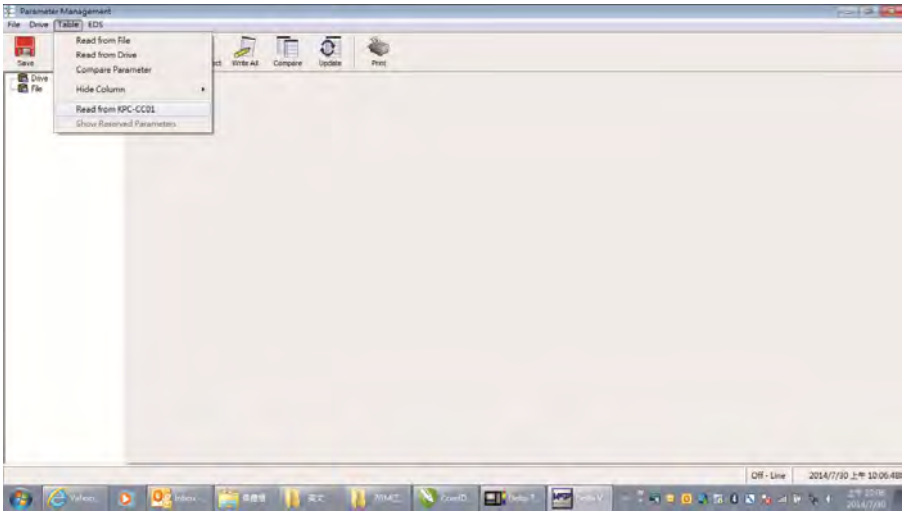

Choose the correct communication port and click **OK**.

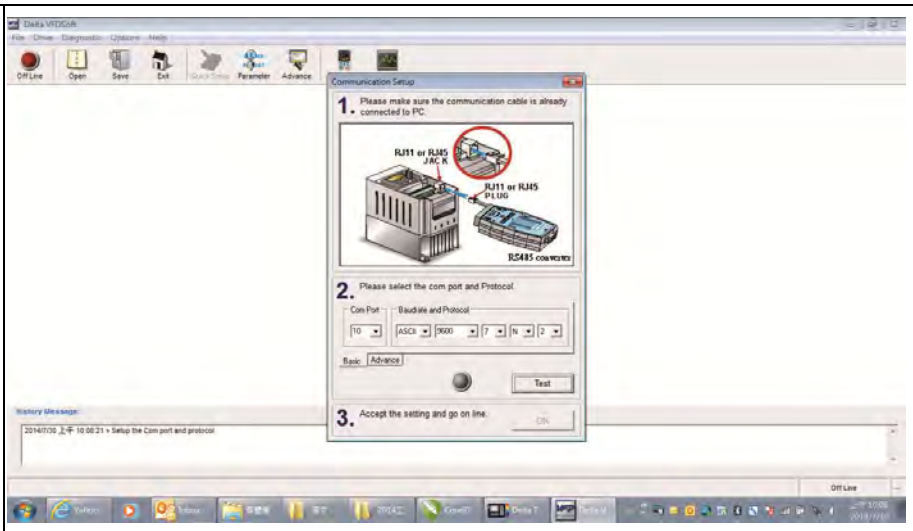

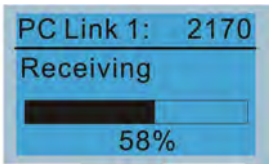

Start to upload parameters to VFDSoft

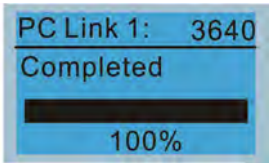

Uploading parameter is completed

Before using the user-defined start-up screen and user-defined main screen, you must preset the start-up screen and the main screen as user-defined. If you do not download the user-defined screen to the KPC-CC01, the start-up screen and the main screen are blank.

16. Start Wizard (applicable for C2000 Plus firmware V3.05 and above)

16.1 New drive start-up setting process

When a new drive is powered on, it directly enters the Start Wizard. There are three modes in the start-up setting process: Start Wizard, Exit Wizard and Test Mode.

(1) Start Wizard:

- In Start Wizard, you can set drive's parameters such as Calendar, Maximum operation frequency and Maximum voltage…; refer to Table 1 for setting items and orders.
- The drive exits Start Wizard when you finish the complete setting process, and will not enter this process when rebooting the power.

(2) Exit Wizard:

- Exit the Start Wizard mode. The drive does not go to Start Wizard when rebooting the power.

(3) Test Mode:

- This function is hidden to avoid misuse. Refer to the following flow chart to enter Test Mode.
- When the drive is in Test mode, it temporarily disables the Start Wizard and Exit Wizard mode.
- The Test Mode is designed for distributors / suppliers / clients to manage and operate the drive before shipping it out.
- If you enter Test Mode without exiting the Start Wizard process, the drive will begin with the new drive start-up process upon next power on.

Setting Order	Description	Parameter
1	Calendar	N/A
2	Output frequency of motor 1	01-01
3	Output voltage of motor 1	01-02
4	Full-load current for induction motor 1 (A)	05-01
5	Number of poles for induction motor 1	05-04
6	Rated speed for induction motor 1 (rpm)	05-03
7	Minimum output frequency of motor 1	01-07
8	Maximum operation frequency	01-00
9	Master frequency command source (AUTO) / Source selection of the PID target	00-20
10	Operation command source (AUTO)	00-21
11	V/F curve selection	01-43
12	Acceleration time 1	01-12
13	Deceleration time 1	01-13

Table 1: Start Wizard setting items

Flow chart for the above setting process:

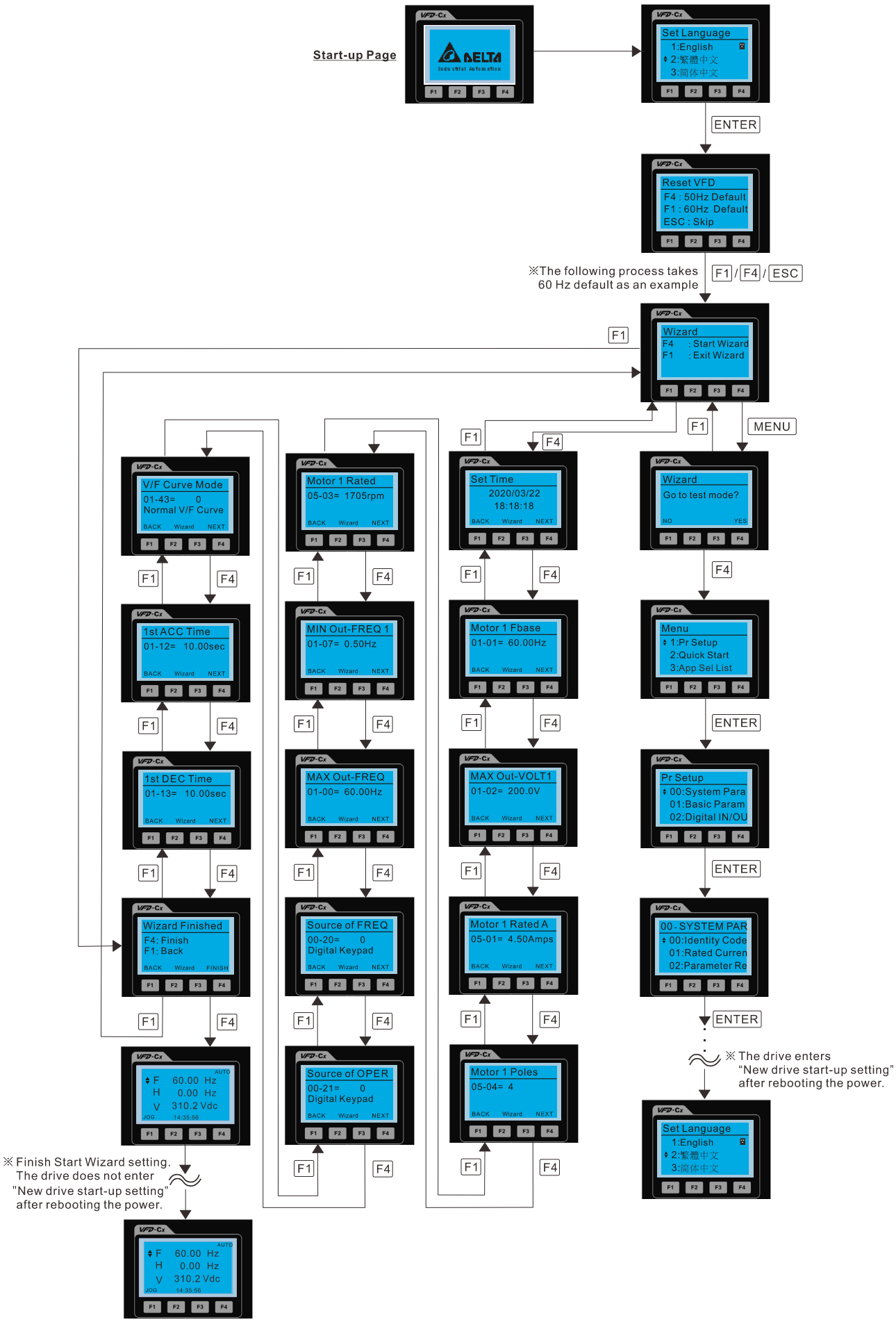

16.2 Re-start Start Wizard

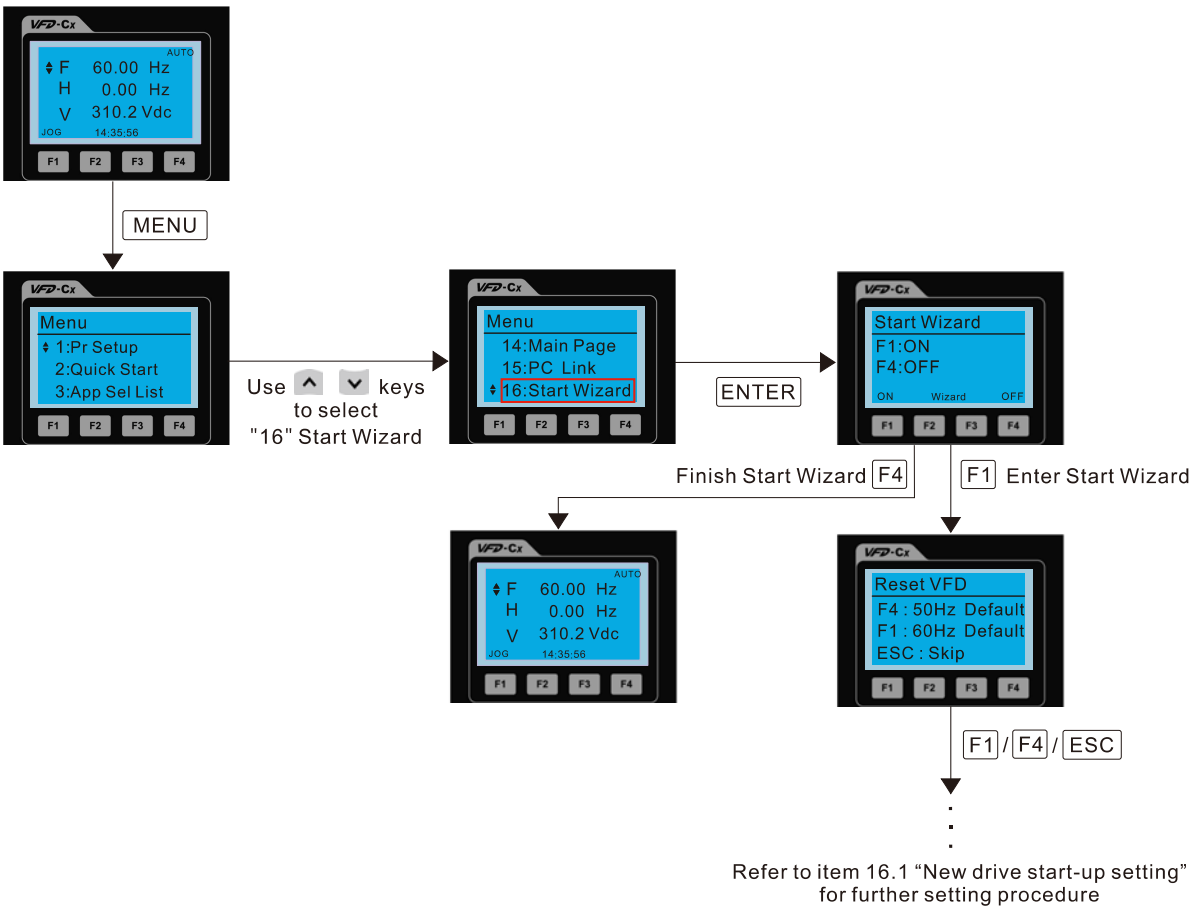

NOTE: The "16: Start Wizard" on the menu is to set whether the screen shows start wizard when powering on the drive.

Other displays

When a fault occurs, the screen display shows the fault or warning:

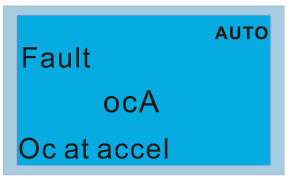

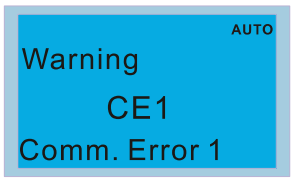

1. Press the STOP / RESET key to reset the fault code. If there is no response, contact your local distributor or return the unit to the factory. To view the fault DC bus voltage, output current and output voltage, press MENU and then choose 6: Fault Record.
2. After resetting, if the screen returns to the main page and shows no fault after you press ESC, the fault is cleared.
3. When the fault or warning message appears, the LED backlight blinks until you clear the fault or warning.

Optional accessory: RJ45 Extension Lead for Digital Keypad

Part No.	Description
CBC-K3FT	RJ45 extension lead, 3 feet (approximately 0.9 m)
CBC-K5FT	RJ45 extension lead, 5 feet (approximately 1.5 m)
CBC-K7FT	RJ45 extension lead, 7 feet (approximately 2.1 m)
CBC-K10FT	RJ45 extension lead, 10 feet (approximately 3 m)
CBC-K16FT	RJ45 extension lead, 16 feet (approximately 4.9 m)

Note: When you need communication cables, buy non-shielded, 24 AWG, four-wire twisted pair, 100 ohms communication cables.

10-3 TPEditor Installation Instruction

TPEditor can edit up to 256 HMI (Human-Machine Interface) pages with a total storage capacity of 256 KB. Each page can include 50 normal objects and 10 communication objects.

1) TPEditor: Setup & Basic Functions

1. Run TPEditor version 1.60 or above by double-clicking the program icon.

2. On the **File** menu, click **New**. In the New project dialog box, for **Set Device Type**, select **DELTA VFD-C Inverter**. For **TP Type**, select **VFD-C KeyPad**. For **File Name**, enter TPE0 and then click **OK**.

3. The editor displays the Design window. On the **Edit** menu, click **Add a New Page**. You can also right-click on the TP page in the upper right corner of the Design window and click **Add** to add one more page(s) to edit.

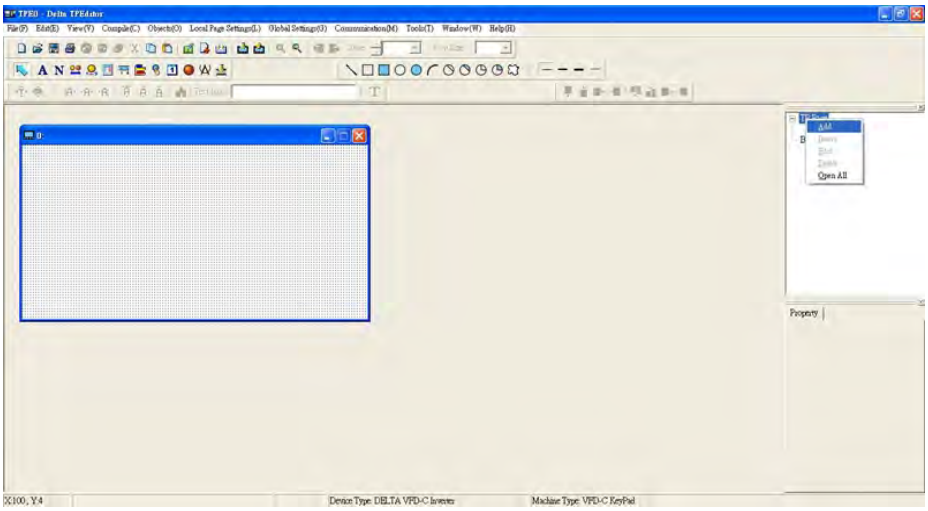

4. Edit the start-up screen.

5. Add static text. Open a blank page (step 3), then on the toolbar click . Double-click the blank page to display the **Static Text Setting** dialog box, and then enter the static text.

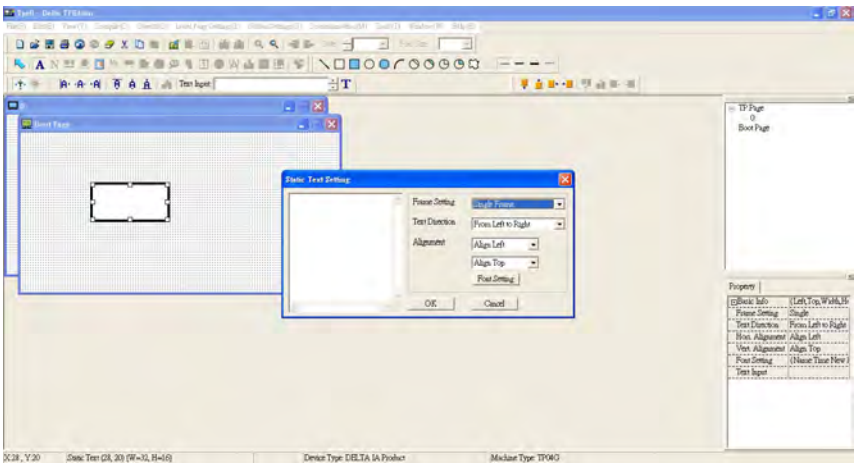

6. Add a static bitmap. Open a blank page (step 3), then on the toolbar, click . Double-click the blank page to display the **Static Bitmap Setting** dialog box where you can choose the bitmap.

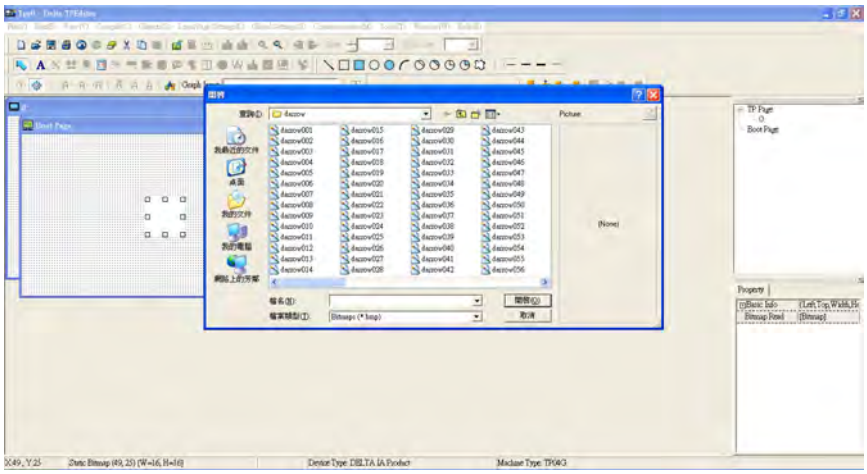

You can only use images in the BMP format. Click the image and then click Open to show the image in the page.

7. Add a geometric bitmap. There are 11 kinds of geometric bitmaps to choose. Open a new blank page (step 3), then on the toolbar click the geometric bitmap icon that you need . In the page, drag the geometric bitmap and enlarge it to the size that you need.

8. When you finish editing the start-up screen, on the **Communication** menu, click **Input User Defined Keypad Starting Screen.**

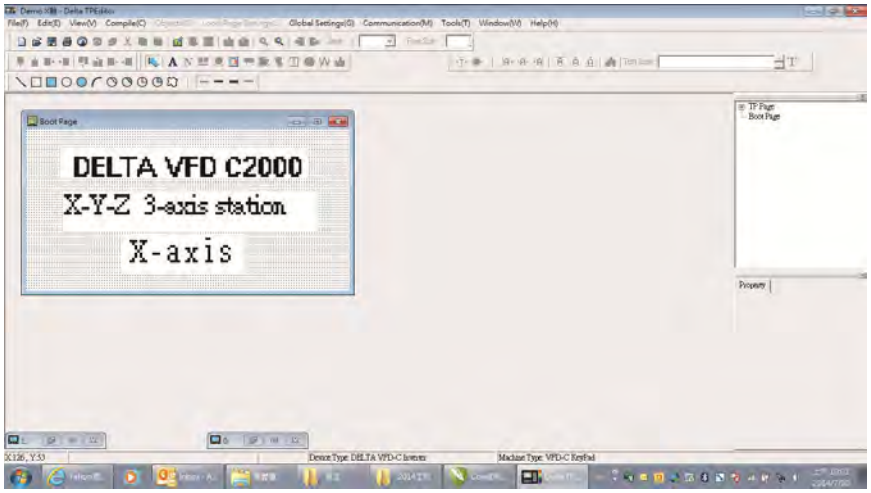

9. Download the new setting: On the **Tool** menu, click **Communication**. Set up the communication port and speed for the IFD6530. There are three speeds available: 9600 bps, 19200 bps, and 38400 bps.

10. On the **Communication** menu, click **Input User Defined Keypad Starting Screen**.

11. The Editor displays a message asking you to confirm the new setting. Before you click **OK**, on the keypad, go to MENU, select PC LINK, press ENTER and then wait for few seconds. Then click **YES** in the confirmation dialog box to start downloading.

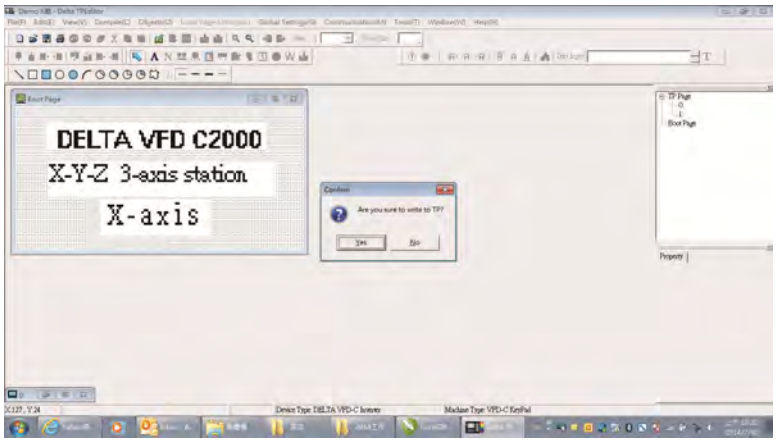

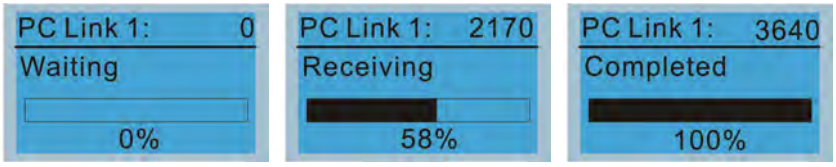

2) Edit the Main Page and Download to the Keypad

1. In the Editor, add a page to edit. On the **Edit** menu, click **Add a New Page**. You can also right-click on the TP page in the upper right corner of the Design window and click **Add** to add one more pages to edit. This keypad currently supports up to 256 pages.

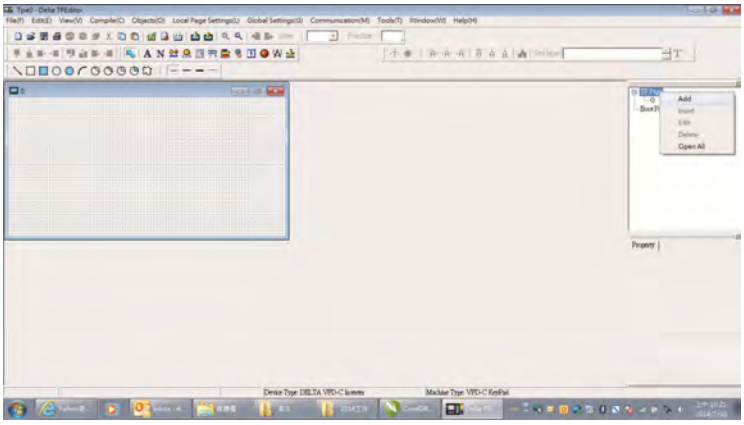

2. In the bottom right-hand corner of the Editor, click the page number to edit, or on the **View** menu, click **HMI Page** to start editing the main page. As shown in the picture above, the following objects are available. From left to right they are: Static Text, ASCII Display, Static Bitmap, Scale, Bar Graph, Button, Clock Display, Multi-state bit map, Units, Numeric Input, the 11 geometric bitmaps, and lines of different widths. Use the same steps to add Static Text, Static Bitmap, and geometric bitmaps as for the start-up page.

3. Add a numeric/ASCII display. On the toolbar, click the **Numeric/ASCII** button. In the page, double-click the object to specify the **Refer Device**, **Frame Setting**, **Font Setting** and **Alignment**.

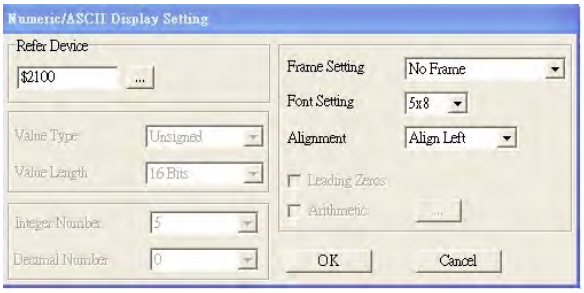

Click **[...]**. In the **Refer Device** dialog box, choose the VFD communication port that you need. If you want to read the output frequency (H), set the **Absolute Addr.** to 2202. For other values, refer to the ACMD Modbus Comm Address List (see Pr.09-04 in Chapter 12 Group 09 Communication Parameters).

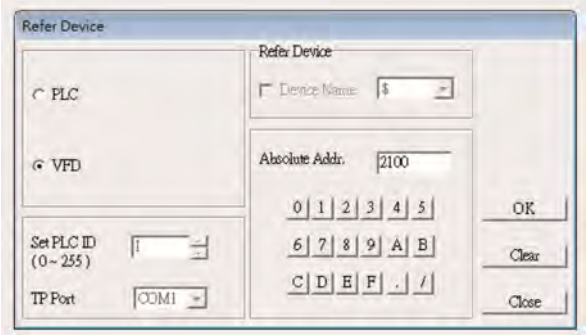

4. Scale Setting. On the toolbar, click to add a scale. You can also edit the Scale Setting in the Property Window on the right-hand side of your computer screen.

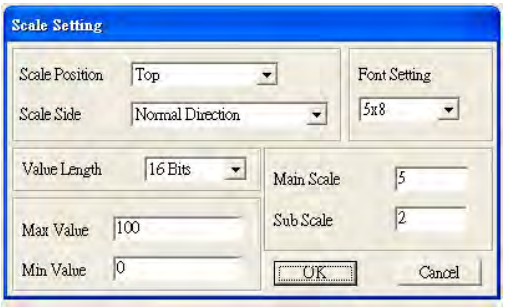

a. **Scale Position**: specifies where to place the scale.

b. **Scale Side**: specifies whether the scale is numbered from smaller numbers to larger numbers or from larger to smaller.

c. **Font Setting**: specifies the font.

d. **Value Length**: specifies 16 bits or 32 bits.

e. **Main Scale & Sub-Scale**: divides the whole scale into equal parts; enter the numbers for the main scale and sub-scale.

f. **Max Value & Min Value**: specifies the numbers on the two ends of the scale. They can be negative numbers, but the maximum and minimum values are limited by the **Value Length** setting. For example, when **Value Length** is **hexadecimal** (**16 bits**), the maximum and the minimum value cannot be entered as -40000.

Clicking **OK** creates a scale as in the picture below.

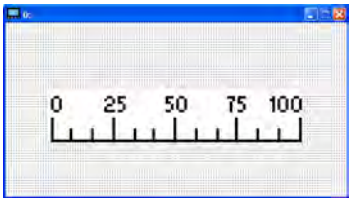

5. Bar Graph setting. On the toolbar, click to add a bar graph.

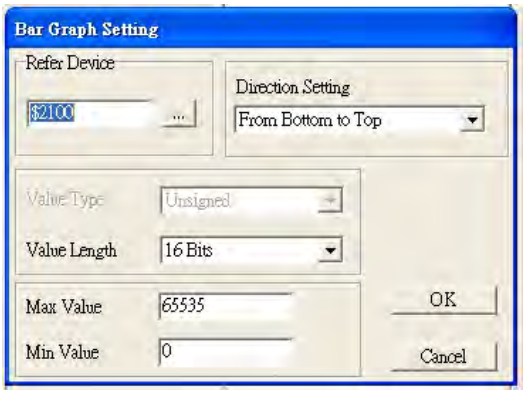

a. **Refer Device**: specifies the VFD communication port.

b. **Direction Setting**: specifies the direction: **From Bottom to Top**, **From Top to Bottom**, **From Left to Right** or **From Right to Left**.

c. **Max Value** and **Min Value**: specifies the maximum value and minimum value. A value smaller than or equal to the minimum value causes the bar graph to be blank (0). A value is bigger or equal to the maximum value causes the bar graph is full (100%). A value between the minimum and maximum values causes the bar graph to be filled proportionally.

6. Button : on the toolbar, click . Currently this function only allows the keypad to switch pages; other functions are not yet available (including text input and insert image). In the blank page, double-click to open the Button Setting dialog box.

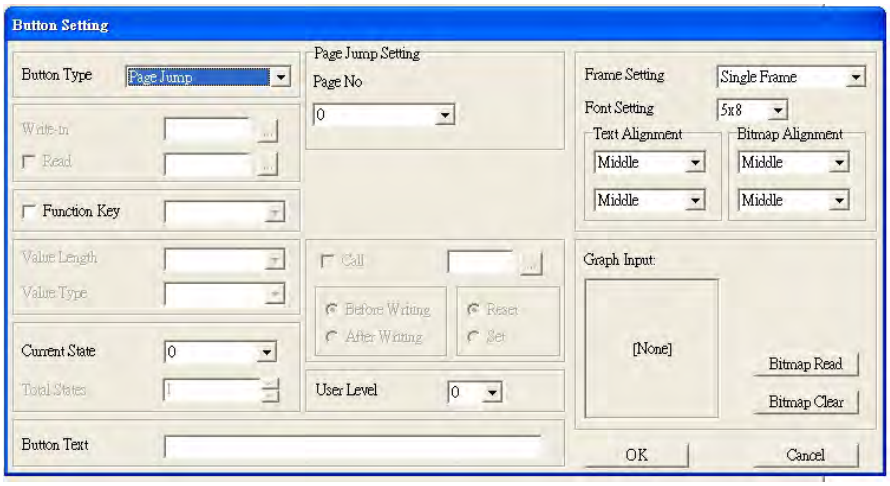

Button Type: specifies the button's functions.

Page Jump and **Constant Setting** are the only functions currently supported.

A. Page Jump Setting

- **Page Jump Setting**: in the **Button Type** list, choose **Page Jump** to show the **Page Jump Setting**.
- **Function Key**: specifies the functions for the following keys on the KPC-CC01 keypad: F1, F2, F3, F4, Up, Down, Left and Right. Note that the Up and Down keys are locked by TPEditor. You cannot program these two keys. If you want to program Up and Down keys, on the **Tool** menu, click **Function Key Setting**, and then click **Re-Define Up/Down Key**.

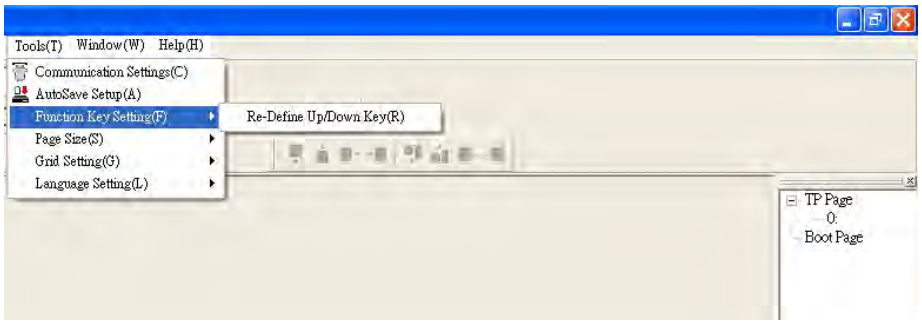

- **Button Text**: specifies the text that appears on a button. For example, when you enter Next Page for the button text, that text appears on the button.

B. Constant setting

This function specifies the memory address' values for the VFD or PLC. When you press the **Function Key**, it writes a value to the memory address specified by the value for **Constant Setting**. You can use this function to initialize a variable.

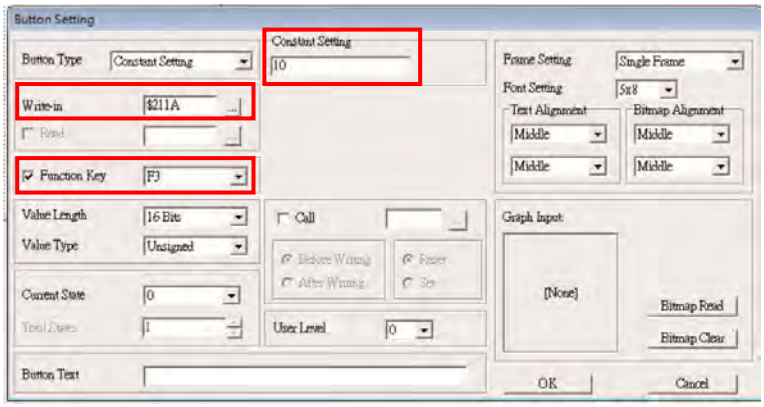

7. **Clock Display Setting**: on the toolbar, click . You can display the time, day, or date on the keypad. Open a new page and click once in that window to add a clock display.
   Choose to display **Time**, **Day**, or **Date** on the keypad. To adjust time, go to #8 on the keypad's menu. You can also specify the **Frame Setting**, **Font Setting**, and **Alignment**.

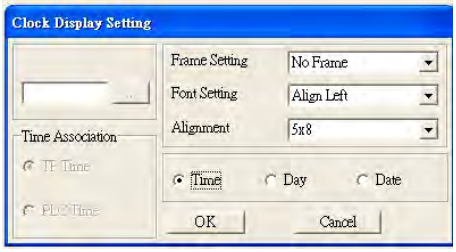

8. Multi-state bitmap: on the toolbar, click . Open a new page and click once in that window to add a Multi-state bitmap. This object reads a bit's property value from the PLC. It defines the image or text that appears when this bit is 0 or 1. Set the initial status (**Current State**) to be 0 or 1 to define the displayed image or text.

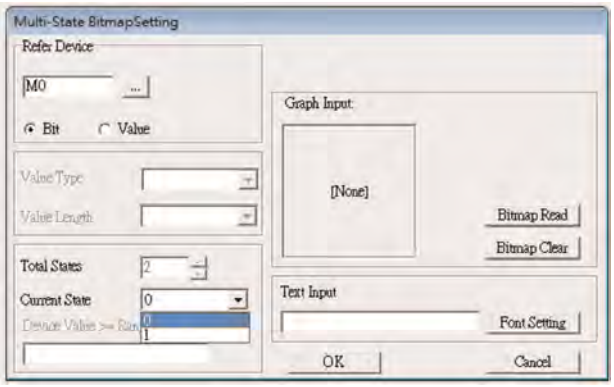

9. Unit Measurement: on the toolbar, click .

   Open a new blank page, and double-click on that window to display the **Units Setting** dialog box. Choose the Metrology Type and the Unit Name. For Metrology, the choices are Length, Square Measure, Volume/Solid Measure, Weight, Speed, Time, and Temperature. The unit name changes automatically when you change metrology type.

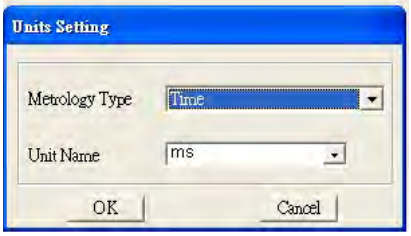

10. Numeric Input Setting: on the toolbar, click

    This object enables you to provide parameters or communication ports (0x22xx) and to input numbers. Open a new file and double click on that window to display the **Numeric Input Setting** dialog box.

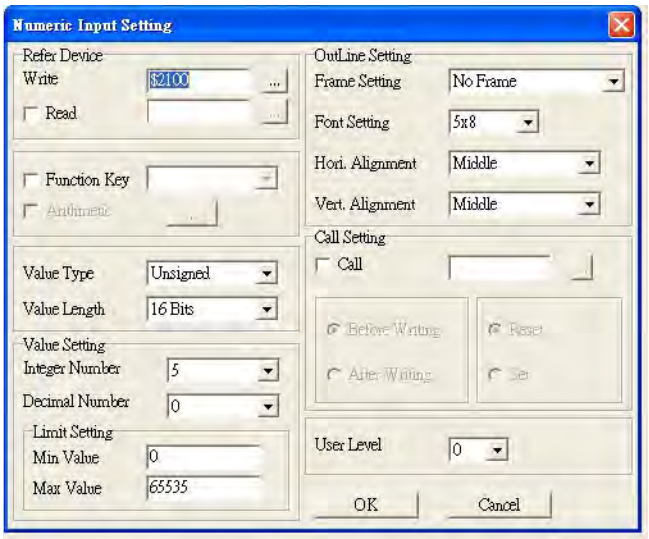

a. **Refer Device**: specifies the **Write** and the **Read** values. Enter the numbers to display and the corresponding parameter and communication port numbers. For example, enter 012C to Read and Write Parameter Pr.01-44.

b. **OutLine Setting**: specifies the **Frame Setting**, **Font Setting**, **Hori. Alignment**, and **Vert. Alignment** for the outline.

c. **Function Key**: specifies the function key to program on the keypad in the **Function Key** box. The corresponding key on the keypad starts to blink. Press ENTER to confirm the setting.

d. **Value Type** and **Value Length**: specify the range of the **Min Value** and **Max Value** for the **Limit Setting**. Note that the corresponding supporting values for MS300 must be 16 bits. 32-bit values are not supported.

e. **Value Setting**: automatically set by the keypad itself.

f. **Limit Setting**: specifies the range for the numeric input here.

For example, if you set **Function Key** to **F1**, **Min Value** to 0 and **Max Value** to 4, when you press F1 on the keypad, then you can press Up/Down on the keypad to increase or decrease the value. Press ENTER on the keypad to confirm your setting. You can also view the parameter table 01-44 to verify if you correctly entered the value.

11. Download TP Page: Press Up / Down on the keypad to select #13 PC Link.
    Then press ENTER on the keypad. The screen displays “Waiting”. In TPEditor, choose a page that you have created, and then on the **Communication** menu click **Write to TP** to start downloading the page to the keypad.
    When you see “Completed” on the keypad screen, the download is finished. You can then press ESC on the keypad to go back to the menu screen.

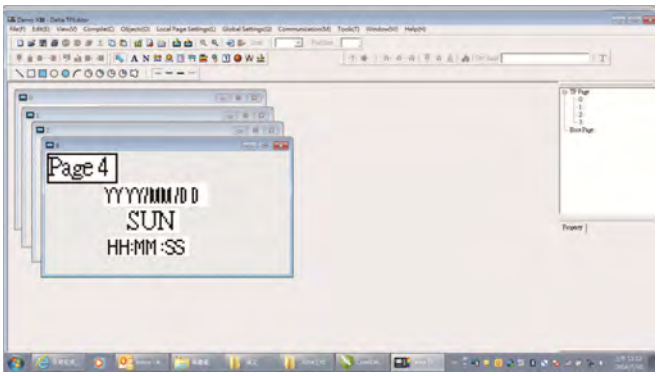

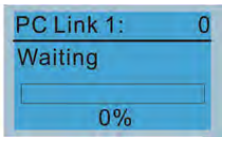

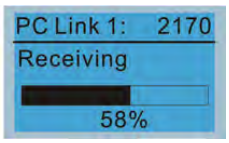

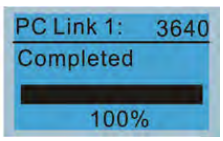

10-4 Digital Keypad KPC-CC01 Fault Codes and Descriptions

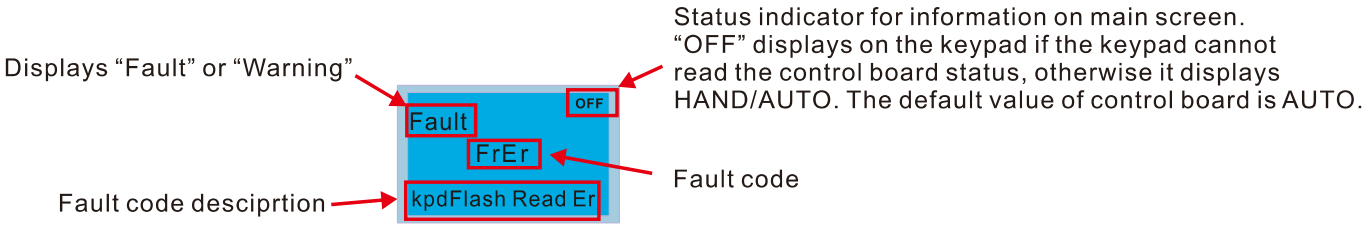

Fault Codes

LCD Display *	Fault Name	Description	Corrective Actions
AUTO Fault FrEr kpd Flash Read Er	Flash memory read error (FrEr)	Keypad flash memory read error	Error in the keypad’s flash memory. 1. Press RESET to clear the errors. 2. Check for any problem on Flash IC. 3. Shut down the system, wait for ten minutes, and then restart the system. If none of the above solutions works, contact your authorized local dealer for assistance.
AUTO Fault FsEr kpd Flash Save Er	Flash memory save error (FsEr)	Keypad flash memory save error	Error in the keypad’s flash memory. 1. Press RESET to clear the errors. 2. Check for any problem on Flash IC. 3. Shut down the system, wait for ten minutes, and then restart the system. If none of the above solutions works, contact your authorized local dealer for assistance.
AUTO Fault FPEr kpd Flash Pr Er	Flash memory parameter error (FPEr)	Keypad flash memory parameter error	Error in the default parameters. It might be caused by a firmware update. 1. Press RESET to clear the errors. 2. Check for any problem on Flash IC. 3. Shut down the system, wait for ten minutes, and then restart the system. If none of the above solutions works, contact your authorized local dealer for assistance.
AUTO Fault VFDr Read VFD Info Er	Reading AC motor drive data error (VFDr)	Keypad error when reading AC motor drive data	Keypad cannot read any data sent from the VFD. 1. Verify that the keypad is properly connected to the motor drive by a communication cable such as RJ45. 2. Press RESET to clear the errors. 3. Shut down the system, wait for ten minutes, and then restart the system. If none of the above solutions works, contact your authorized local dealer for assistance.
AUTO Fault CPUEr CPU Error	CPU error (CPUEr)	Keypad CPU error	A serious error in the keypad’s CPU. 1. Check for any problem on CPU clock. 2. Check for any problem on Flash IC. 3. Check for any problem on RTC IC. 4. Verify that the communication quality of the RS-485 cable is good. 5. Shut down the system, wait for ten minutes, and then restart the system. If none of the above solutions works, contact your authorized local dealer for assistance.

Warning Codes

LCD Display *	Warning Name	Description	Corrective Actions
AUTO Warning CE1 Comm. Error 1	Commuication error 1 (CE1)	RS-485 Modbus illegal function code	Motor drive does not accept the communication command sent from the keypad. 1. Verify that the keypad is properly connected to the motor drive by a communication cable such as RJ45. 2. Press RESET on the keypad to clear errors. If none of the above solutions works, contact your local authorized dealer for assistance.
AUTO Warning CK1 Comm Command Er	Communication command error 1 (CK1)	Keypad communication data, illegal function code (Keypad auto-detect this error and display it)	Keypad does not accept the motor drive's communication command. 1. Remove the keypad and reconnect it. 2. Verify if the Baud rate = 19200 bps, and the Format = RTU8, N, 2 3. Verify if the keypad is properly connected to the motor drive on the communication contact by a communication cable such as RJ45. If none of the above solution works, contact your local authorized dealer.
AUTO Warning CE2 Comm. Error 2	Communication error 2 (CE2)	RS-485 Modbus illegal data address	Motor drive does not accept the keypad's communication address. 1. Verify that the keypad is properly connected to the motor drive by a communication cable such as RJ45. 2. Press RESET to clear the errors. If none of the above solutions works, contact your local authorized dealer for assistance.
AUTO Warning CK2 Comm Address Er	Communication address error (CK2)	Keypad communication data, illegal data address (Keypad auto-detect this error and display it)	Keypad does not accept the motor drive's communication command. 1. Remove the keypad and reconnect it. 2. Verify if the Baud rate = 19200 bps, and the Format = RTU8, N, 2 3. Verify if the keypad is properly connected to the motor drive on the communication contact by a communication cable such as RJ45. If none of the above solution works, contact your local authorized dealer.
AUTO Warning CE3 Comm. Error 3	Communication error 3 (CE3)	RS-485 Modbus illegal data value	Motor drive does not accept the communication data sent from the keypad. 1. Verify that the keypad is properly connected to the motor drive by a communication cable such as RJ45. 2. Press RESET to clear the errors. If none of the above solutions works, contact your local authorized dealer for assistance.
AUTO Warning CK3 Comm Data Error	Communication data error (CK3)	Keypad communication data, illegal data value (Keypad auto-detect this error and display it)	Keypad does not accept the motor drive's communication command. 1. Remove the keypad and reconnect it. 2. Verify if the Baud rate = 19200 bps, and the Format = RTU8, N, 2 3. Verify if the keypad is properly connected to the motor drive on the communication contact by a communication cable such as RJ45. If none of the above solution works, contact your local authorized dealer.

LCD Display *	Warning Name	Description	Corrective Actions
AUTO Warning CE4 Comm. Error 4	Communication error 4 (CE4)	RS-485 Modbus data is written to read-only address	Motor drive cannot process the communication command sent from the keypad. 1. Verify that the keypad is properly connected to the motor drive by a communication cable such as RJ45. 2. Press RESET to clear the errors. 3. Shut down the system, wait for ten minutes, and then restart the system. If none of the above solutions works, contact your local authorized dealer for assistance.
AUTO Warning CK4 Comm Slave Error	Communication slave error (CK4)	Keypad communication data is written to read-only address (Keypad auto-detect this error and display it)	Keypad does not accept the motor drive's communication command. 1. Remove the keypad and reconnect it. 2. Verify if the Baud rate = 19200 bps, and the Format = RTU8, N, 2 3. Verify if the keypad is properly connected to the motor drive on the communication contact by a communication cable such as RJ45. If none of the above solution works, contact your local authorized dealer.
AUTO Warning CE10 Comm. Error 10	Communication error 10 (CE10)	RS-485 Modbus transmission time-Out	Motor drive does not respond to the communication command sent from the keypad. 1. Verify that the keypad is properly connected to the motor drive by a communication cable such as RJ45. 2. Press RESET to clear the errors. 3. Shut down the system, wait for ten minutes, and then restart the system. If none of the above solutions works, contact your local authorized dealer for assistance.
AUTO Warning CK10 KpdComm Time Out	Keypad communication time out (CK10)	Keypad communication data, transmission time-out (Keypad auto-detect this error and display it).	Keypad does not accept the motor drive's communication command. 1. Remove the keypad and reconnect it. 2. Verify if the Baud rate = 19200 bps, and the Format = RTU8, N, 2 3. Verify if the keypad is properly connected to the motor drive on the communication contact by a communication cable such as RJ45. If none of the above solution works, contact your local authorized dealer.
AUTO Warning TPNO TP No Object	Keypad communication time out (CK10)	Object not supported by TPEditor	Keypad's TPEditor uses an unsupported object. 1. Verify that the TPEditor is not using an unsupported object or setting. Delete unsupported objects and unsupported settings. 2. Re-edit the object in the TPEditor, and then download it to the keypad. 3. Verify that the motor drive supports the TP functions. If the drive does not support TP function, the main page displays Default. If none of the above solutions works, contact your local authorized dealer for assistance.

NOTE The warning code CExx only occurs when the communication problem is between the drive and the keypad. It has nothing to do with the drive and other devices. Note the warning code description to find the cause of the error if CExx appears.

File Copy Setting Fault Description:

These faults occur when KPC-CC01 cannot perform the command after clicking the ENTER key in the copy function.

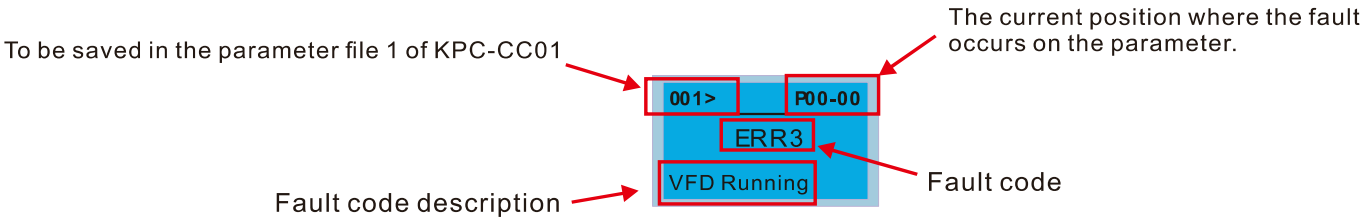

LCD Display *	Fault Name	Description	Corrective Actions
001> P00-00 ERR1 Read Only	Read only (ERR1)	Parameter and file are read-only	The parameter / file is read-only and cannot be written to. 1. Verify the specification in the user manual. If this solution does not work, contact your local authorized dealer for assistance.
001> P00-00 ERR2 Write Fail	Write in error (ERR2)	Fail to write parameter and file	An error occurred while writing to a parameter / file. 1. Check for any problem on the Flash IC. 2. Shut down the system, wait for ten minutes, and then restart the system. If this solution does not work, contact your local authorized dealer for assistance.
001> P00-00 ERR3 VFD Running	Drive operating (ERR3)	AC motor drive is in operating status	A setting cannot be changed while the motor drive is in operation. 1. Verify that the drive is not in operation. If this solution does not work, contact your local authorized dealer for assistance.
001> P00-00 ERR4 Pr Lock	Parameter locked (ERR4)	AC motor drive parameter is locked	A setting cannot be changed because a parameter is locked. 1. Check if the parameter is locked. If it is locked, unlock it and try to set the parameter again. If this solution does not work, contact your local authorized dealer for assistance.
001> P00-00 ERR5 Pr Changing	Parameter changing (ERR5)	AC motor drive parameter is changing	A setting cannot be changed because a parameter is being modified. 1. Check if the parameter is being modified. If it is not being modified, try to change that parameter again. If this solution does not work, contact your local authorized dealer for assistance.
001> P00-00 ERR6 Fault Code	Fault code (ERR6)	Fault code is not cleared	A setting cannot be changed because an error has occurred in the motor drive. 1. Check if any error occurred in the motor drive. If there is no error, try to change the setting again. If this solution does not work, contact your local authorized dealer for assistance.
001> P00-00 ERR7 Warning Code	Warning code (ERR7)	Warning code is not cleared	A setting cannot be changed because of a warning message given to the motor drive. 1. Check if there is a warning message given to the motor drive. If this solution does not work, contact your local authorized dealer for assistance.

LCD Display *	Fault Name	Description	Corrective Actions
001> P00-00 ERR8 Type Mismatch	File type mismatch (ERR8)	File type mismatch	Data to be copied are not the correct type, so the setting cannot be changed. 1. Check if the products' serial numbers to be copied are in the same category. If they are in the same category, try to copy the setting again. If this solution does not work, contact your local authorized dealer for assistance.
001> P00-00 ERR9 Password Lock	Password locked (ERR9)	File is locked with password	A setting cannot be changed because some data are locked. 1. Check if the data are unlocked or able to be unlocked. If the data are unlocked, try to change the setting again. 2. Shut down the system, wait for ten minutes, and then restart the system. If none of the above solutions works, contact your local authorized dealer for assistance.
001> P00-00 ERR10 Password Fail	Password fail (ERR10)	File password mismatch	A setting cannot be changed because the password is incorrect. 1. Check if the password is correct. If the password is correct, try to change the setting again. 2. Shut down the system, wait for ten minutes, and then restart the system. If none of the above solutions works, contact your local authorized dealer for assistance.
001> P00-00 ERR11 Version Fail	Version fail (ERR11)	File version mismatch	A setting cannot be changed because the version of the data is incorrect. 1. Check if the version of the data matches the motor drive. If it matches, try to change the setting again. If none of the above solutions works, contact your local authorized dealer for assistance.
001> P00-00 ERR12 VFD Time Out	VFD Time out (ERR12)	AC motor drive copy function time-out	A setting cannot be changed because the data copying time-out expired. 1. Try copying the data again. 2. Check if copying data is authorized. If it is authorized, try to copy the data again. 3. Shut down the system, wait for ten minutes, and then restart the system. If none of the above solutions works, contact your local authorized dealer for assistance.

※ The content in this section only applies to the KPC-CC01 keypad V1.01 and later versions.

10-5 Unsupported Functions when using TPEditor with the KPC-CC01

1. **Local Page Setting** and **Global Setting** functions are not supported.

2. In the **Communication** menu, **Read from TP** function is not supported.

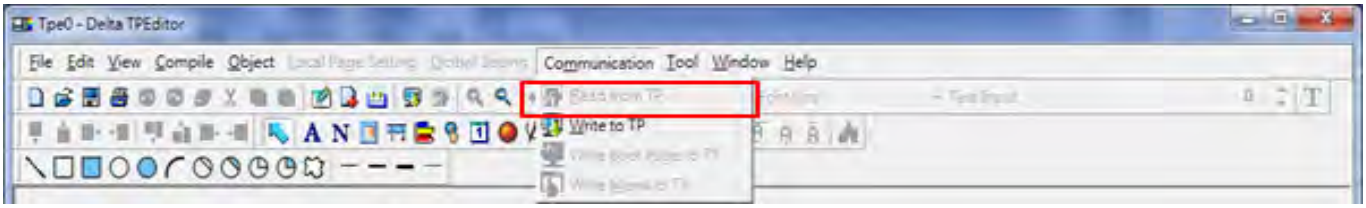

3. In the **RTC Display Setting**, you cannot change the **Refer Device**.

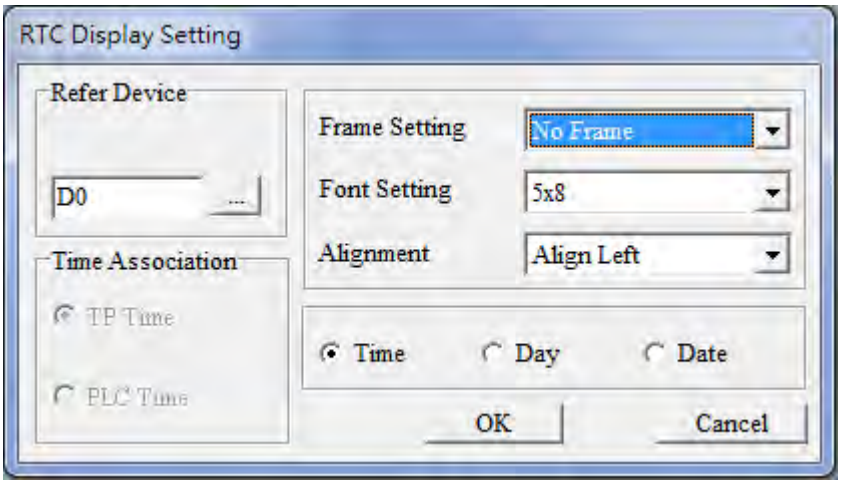

[This page intentionally left blank]

Chapter 11 Summary of Parameter Settings

This chapter provides a summary of parameter (Pr.) setting ranges and defaults. You can set, change, and reset parameters through the digital keypad.

NOTE

1) ✓: You can set this parameter during operation
2) The following are abbreviations for different types of motors:
   - IM: Induction motor
   - PM: Permanent magnet synchronous AC motor
   - IPM: Interior permanent magnet synchronous AC motor
   - SPM: Surface permanent magnet synchronous AC motor
   - SynRM: Synchronous reluctance motor

00 Drive Parameters

Pr.	Parameter Name	Setting Range	Default
00-00	AC motor drive identity code	4: 230V, 0.75 kW 5: 460V, 0.75 kW 6: 230V, 1.50 kW 7: 460V, 1.50 kW 8: 230V, 2.20 kW 9: 460V, 2.20 kW 10: 230V, 3.70 kW 11: 460V, 3.70 kW 12: 230V, 5.50 kW 13: 460V, 5.50 kW 14: 230V, 7.50 kW 15: 460V, 7.50 kW 16: 230V, 11.0 kW 17: 460V, 11.0 kW 18: 230V, 15.0 kW 19: 460V, 15.0 kW 20: 230V, 18.5 kW 21: 460V, 18.5 kW 22: 230V, 22.0 kW 23: 460V, 22.0 kW 24: 230V, 30.0 kW 25: 460V, 30.0 kW 26: 230V, 37.0 kW 27: 460V, 37.0 kW 28: 230V, 45.0 kW 29: 460V, 45.0 kW 30: 230V, 55.0 kW	Read only

Pr.	Parameter Name	Setting Range	Default
		31: 460V, 55.0 kW 32: 230V, 75.0 kW 33: 460V, 75.0 kW 34: 230V, 90.0 kW 35: 460V, 90.0 kW 37: 460V, 110.0 kW 39: 460V, 132.0 kW 41: 460V, 160.0 kW 43: 460V, 185.0 kW 45: 460V, 220.0 kW 47: 460V, 280.0 kW 49: 460V, 315.0 kW 51: 460V, 355.0 kW 53: 460V, 400.0 kW 55: 460V, 450.0 kW 57: 460V, 500.0 kW 59: 460V, 560.0 kW 93: 460V, 4 kW 486: 460V, 200.0 kW 487: 460V, 250.0 kW 505: 575V, 1.5 kW 506: 575V, 2.2 kW 507: 575V, 3.7 kW 508: 575V, 5.5 kW 509: 575V, 7.5 kW 510: 575V, 11 kW 511: 575V, 15 kW 612: 690V, 18.5 kW 613: 690V, 22 kW 614: 690V, 30 kW 615: 690V, 37 kW 616: 690V, 45 kW 617: 690V, 55 kW 618: 690V, 75 kW 619: 690V, 90 kW 620: 690V, 110 kW 621: 690V, 132 kW 622: 690V, 160 kW 686: 690V, 200 kW 687: 690V, 250 kW 626: 690V, 315 kW 628: 690V, 400 kW 629: 690V, 450 kW	

	Pr.	Parameter Name	Setting Range	Default
			631: 690V, 560 kW 632: 690V, 630 kW	
	00-01	AC motor drive rated current display	Display by models	Read only
	00-02	Parameter reset	0: No function 1: Write protection for parameters 5: Return kWh displays to 0 6: Reset PLC (including CANopen Master Index) 7: Reset CANopen Slave index 9: Reset all parameters to defaults (base frequency is 50 Hz) 10: Reset all parameters to defaults (base frequency is 60 Hz)	0
✓	00-03	Start-up display	0: F (frequency command) 1: H (output frequency) 2: U (user-defined, see Pr.00-04) 3: A (output current)	0
✓	00-04	Content of multi-function display (user-defined)	0: Display output current (A) (unit: Amp) 1: Display counter value (c) (Unit: CNT) 2: Display the motor's actual output frequency (H.) (Unit: Hz) 3: Display the drive's DC bus voltage (v) (Unit: V_{DC}) 4: Display the drive's output voltage (E) (Unit: V_{AC}) 5: Display the drive's output power angle (n) (Unit: deg) 6: Display the drive's output power (P) (Unit: kW) 7: Display the motor speed rpm (r) (Unit: rpm) 8: Display the drive's estimated output torque, motor's rated torque is 100% (t) (Unit: %) 9: Display PG feedback (G) (refer to Pr.10-00 and Pr.10-01) (Unit: PLS) 10: Display PID feedback (b) (Unit: %) 11: Display AVI analog input terminal signal (1.) (Unit: %) 12: Display ACI analog input terminal signal (2.) (Unit: %) 13: Display AUI analog input terminal signal (3.) (Unit: %) 14: Display the drive's IGBT temperature (i.) (Unit: °C) 15: Display the drive's capacitance temperature (c.) (Unit: °C) 16: The digital input status (ON / OFF) (i) 17: The digital output status (ON / OFF) (o)	3

Pr.	Parameter Name	Setting Range	Default
		18: Display multi-step speed (S) 19: The corresponding CPU digital input pin status (d) 20: The corresponding CPU digital output pin status (0.) 21: Actual motor position (PG1 of PG card) (P.) The maximum value is 32bits display 22: Pulse input frequency (PG2 of PG card) (S.) 23: Pulse input position (PG2 of PG card) (q.) The maximum value is 32bits display 24: Position command tracing error (E.) 25: Overload count (0.00–100.00%) (o.) (Unit: %) 26: Ground fault GFF (G.) (Unit: %) 27: DC bus voltage ripple (r.) (Unit: V_{DC}) 28: Display PLC register D1043 data (C) 29: Display PM pole section (EMC-PG01U application) (4.) 30: Display the output of user-defined (U) 31: Display Pr.00-05 user gain (K) 32: Number of actual motor revolution during operation (PG card plug in and Z phase signal input) (Z.) 34: Operation speed of fan (F.) (Unit: %) 35: Control mode display: 0 = Speed control mode (SPD) 1 = Torque control mode (TQR) (t.) 36: Present operating carrier frequency of the drive (Unit: Hz) (J.) 38: Display the drive status (6.) 39: Display the drive's estimated output torque, positive and negative, using Nt-m as unit (t 0.0: positive torque; -0.0: negative torque (C.) 40: Torque command (L.) (Unit: %) 41: kWh display (J) (Unit: kWh) 42: PID target value (h.) (Unit: %) 43: PID compensation (o.) (Unit: %) 44: PID output frequency (b.) (Unit: Hz) 45: Hardware ID 49: Motor temperature (KTY84-130 only) 51: PMSVC torque offset 52: AI10% 53: AI11% 54: PMFOC Ke estimation value	

	Pr.	Parameter Name	Setting Range	Default
			68: STO version (d) 69: STO checksum-high word (d) 70: STO checksum-low word (d)	
✓	00-05	Coefficient gain in actual output frequency	0.00–160.00	1.00
	00-06	Firmware version	Read only	Read only
✓	00-07	Parameter protection password input	0–65535 0–4: the number of password attempts allowed	0
✓	00-08	Parameter protection password setting	0–65535 0: No password protection or password entered correctly (Pr.00-07) 1: Parameter has been set	0
✓	00-10	Control mode	0: Speed control mode 1: Position control mode 2: Torque mode	0
	00-11	Speed control mode	0: IMVF (IM V/F control) 1: IMVFPG (IM V/F control + Encoder) 2: IM / PM SVC (IM / PM space vector control) 3: IMFOCPG (IM FOC + Encoder) 4: PMFOCPG (PM FOC + Encoder) 5: IMFOC sensorless (IM field-oriented sensorless vector control) 6: PM sensorless (PM field-oriented sensorless vector control) 7: IPM sensorless (Interior PM field-oriented sensorless vector control) 8: SynRM sensorless control	0
	00-13	Torque mode control	0: IM TQCPG (IM torque control + Encoder) 1: PM TQCPG (PM torque control + Encoder) 2: IM TQC sensorless (IM sensorless torque control) 4: SynRM TQC sensorless (SynRM sensorless torque control)	0
	00-16	Load selection	230V / 460V models 0: Heavy load 1: Super Heavy load	0
			575V / 690V models 0: Normal load 1: Heavy load 2: Light load	2

<table>
<tr><th>Pr.</th><th>Parameter Name</th><th>Setting Range</th><th>Default</th></tr>
<tr><td rowspan="3">00-17</td><td rowspan="3">Carrier frequency (kHz)</td><td>Heavy duty
<table>
<tr><th>Control mode / Model</th><th>VF, VFPG, SVC</th><th>IMFOC PG, IMTQC PG</th><th>PMFOC PG PMTQC PG</th><th>PMFOC, IPMFOC</th><th>IMFOC, IMTQC</th><th>SRM FOC*</th></tr>
<tr><td>VFD007–110C23A/E
VFD007–150C43A/E</td><td>2–15</td><td>2–10</td><td>4–10</td><td>4–10</td><td>4–12</td><td>4–8</td></tr>
<tr><td>VFD150–370C23A/E
VFD185–550C43A/E</td><td>2–10</td><td>2–10</td><td>4–10</td><td>4–10</td><td>4–10</td><td>4–8</td></tr>
<tr><td>VFD450–900C23A/E
VFD750–5600C43A/E</td><td>2–9</td><td>2–9</td><td>4–9</td><td>4–9</td><td>4–9</td><td>4–8</td></tr>
</table>
*The default for SRMFOC is 4 kHz.</td><td>8
6
4</td></tr>
<tr><td>Super Heavy duty
<table>
<tr><th>Control mode / Model</th><th>VF, VFPG, SVC</th><th>IMFOC PG, IMTQC PG</th><th>PMFOC PG, PMTQC PG</th><th>PMFOC, IPMFOC</th><th>IMFOC, IMTQC</th><th>SRM FOC*</th></tr>
<tr><td>VFD007–110C23A/E
VFD007–150C43A/E</td><td>2–15</td><td>2–10</td><td>4–10</td><td>4–10</td><td>4–12</td><td>4–8</td></tr>
<tr><td>VFD150–450C23A/E
VFD185–550C43A/E</td><td>2–10</td><td>2–9</td><td>4–10</td><td>4–10</td><td>4–10</td><td>4–8</td></tr>
<tr><td>VFD550–900C23A/E
VFD750–3150C43A/E</td><td>2–9</td><td>2–9</td><td>4–9</td><td>4–9</td><td>4–9</td><td>4–8</td></tr>
<tr><td>VFD3550–5600C43A
VFD3550–5600C43E</td><td>2–9</td><td>2–9</td><td>4–9</td><td>4–9</td><td>4–9</td><td>4–8</td></tr>
</table>
*The default for SRMFOC is 4 kHz.</td><td>4
4
4
3</td></tr>
<tr><td>575V/690V (Light / Heavy / Super Heavy duty)
<table>
<tr><th>Power/ Control mode</th><th>VF, VFPG, SVC</th></tr>
<tr><td>1–15 HP (575V)</td><td>2–15 kHz</td></tr>
<tr><td>20–600 HP (690V)</td><td>2–9 kHz</td></tr>
<tr><td>850 HP (690V)</td><td>2–9 kHz</td></tr>
</table></td><td>6
4
3</td></tr>
<tr><td>00-19</td><td>PLC command mask</td><td>bit0: Control command is forced by PLC control
bit1: Frequency command is forced by PLC control
bit2: Position command is forced by PLC control
bit3: Torque command is forced by PLC control</td><td>Read only</td></tr>
<tr><td>00-20</td><td>Master frequency command source (AUTO)/ Source selection of the PID target</td><td>0: Digital keypad
1: RS-485 communication input
2: External analog input (Refer to Pr.03-00–03-02)
3: External UP / DOWN terminal (multi-function input terminals)
4: Pulse input without direction command (refer to Pr.10-16 without considering direction), use with PG card
5: Pulse input with direction command (refer to Pr.10-16), use with PG card
6: CANopen communication card
8: Communication card (does not include CANopen card)</td><td>0</td></tr>
</table>

	Pr.	Parameter Name	Setting Range	Default
	00-21	Operation command source (AUTO)	0: Digital keypad 1: External terminals 2: RS-485 communication input 3: CANopen communication card 5: Communication card (does not include CANopen card)	0
✓	00-22	Stop method	0: Ramp to stop 1: Coast to stop	0
✓	00-23	Motor direction control	0: Enable forward / reverse 1: Disable reverse 2: Disable forward	0
	00-24	Digital operator (keypad) frequency command memory	Read only	Read only
✓	00-25	User defined characteristics	bit0–3: user-defined decimal place 0000b: no decimal place 0001b: one decimal place 0010b: two decimal places 0011b: three decimal places bit4–15: user-defined unit 000xh: Hz 001xh: rpm 002xh: % 003xh: kg 004xh: m/s 005xh: kW 006xh: HP 007xh: ppm 008xh: 1/m 009xh: kg/s 00Axh: kg/m 00Bxh: kg/h 00Cxh: lb/s 00Dxh: lb/m 00Exh: lb/h 00Fxh: ft/s 010xh: ft/m 011xh: m 012xh: ft 013xh: degC 014xh: degF 015xh: mbar	0

Pr.	Parameter Name	Setting Range	Default
		016xh: bar 017xh: Pa 018xh: kPa 019xh: mWG 01Axh: inWG 01Bxh: ftWG 01Cxh: psi 01Dxh: atm 01Exh: L/s 01Fxh: L/m 020xh: L/h 021xh: m3/s 022xh: m3/h 023xh: GPM 024xh: CFM xxxxh: Hz	
00-26	Maximum user-defined value	0: Disabled 0–65535 (when Pr.00-25 is set to no decimal place) 0.0–6553.5 (when Pr.00-25 is set to 1 decimal place) 0.00–655.35 (when Pr.00-25 is set to 2 decimal places) 0.000–65.535 (when Pr.00-25 is set to 3 decimal places)	0
00-27	User-defined value	Read only	Read only
00-29	LOCAL / REMOTE selection	0: Standard HOA function 1: When switching between local and remote, the drive stops. 2: When switching between local and remote, the drive runs with REMOTE settings for frequency and operation status. 3: When switching between local and remote, the drive runs with LOCAL settings for frequency and operation status. 4: When switching between local and remote, the drive runs with LOCAL settings when switched to Local and runs with REMOTE settings when switched to Remote for frequency and operation status.	0
00-30	Master frequency command source (HAND)	0: Digital keypad 1: RS-485 communication input 2: External analog input (Refer to Pr.03-00–03-02) 3: External UP / DOWN terminal (multi-function input terminals)	0

	Pr.	Parameter Name	Setting Range	Default
			4: Pulse input without direction command (refer to Pr.10-16 without considering direction) 5: Pulse input with direction command (refer to Pr.10-16) 6: CANopen communication card 8: Communication card (does not include CANopen card)	
	00-31	Operation command source (HAND)	0: Digital keypad 1: External terminals 2: RS-485 communication input 3: CANopen communication card 5: Communication card (does not include CANopen card)	0
✓	00-32	Digital keypad STOP function	0: STOP key disabled 1: STOP key enabled	0
	00-33	RPWM mode selection	0: Disable 1: RPWM mode 1 2: RPWM mode 2 3: RPWM mode 3	0
✓	00-34	RPWM range	0.0–4.0 kHz Pr.00-17 = 4 kHz, 8 kHz: the setting range is 0.0–2.0 kHz Pr.00-17 = 5–7 kHz: the setting range is 0.0–4.0 kHz	0.0
✓	00-37	Over-modulation gain	80–120	100
✓	00-48	Display filter time (current)	0.001–65.535 sec.	0.100
✓	00-49	Display filter time (keypad)	0.001–65.535 sec.	0.100
	00-50	Software version (date)	Read only	Read only

01 Basic Parameters

	Pr.	Parameter Name	Setting Range	Default
✓	01-00	Maximum operation frequency of motor 1	0.00–599.00 Hz	60.00 / 50.00
	01-01	Rated / base frequency of motor 1	0.00–599.00 Hz	60.00 / 50.00
	01-02	Rated / base output voltage of motor 1	230V models: 0.0–255.0 V 460V models: 0.0–510.0 V 575V models: 0.0–637.0 V 690V models: 0.0–765.0 V	200.0 400.0 600.0 660.0
	01-03	Mid-point frequency 1 of motor 1	0.00–599.00 Hz	3.00
✓	01-04	Mid-point voltage 1 of motor 1	230V models: 0.0–240.0 V 460V models: 0.0–480.0 V 575V models: 0.0–637.0 V 690V models: 0.0–720.0 V	11.0 22.0 0.0 0.0
	01-05	Mid-point frequency 2 of motor 1	0.00–599.00 Hz	1.50
✓	01-06	Mid-point voltage 2 of motor 1	230V models: 0.0–240.0 V 460V models: 0.0–480.0 V 575V models: 0.0–637.0 V 690V models: 0.0–720.0 V	5.0 10.0 0.0 0.0
	01-07	Minimum output frequency of motor 1	0.00–599.00 Hz	0.50
✓	01-08	Minimum output voltage of motor 1	230V models: 0.0–240.0 V 460V models: 0.0–480.0 V 575V models: 0.0–637.0 V 690V models: 0.0–720.0 V	1.0 2.0 0.0 0.0
	01-09	Start-up frequency	0.00–599.00 Hz	0.50
✓	01-10	Output frequency upper limit	0.00–599.00 Hz	599.00
✓	01-11	Output frequency lower limit	0.00–599.00 Hz	0
✓	01-12	Acceleration time 1	Pr.01-45=0: 0.00–600.00 sec. Pr.01-45=1: 0.00–6000.0 sec. The default of motor drive with 30HP and above: 60.00 / 60.0	10.00
✓	01-13	Deceleration time 1	Pr.01-45=0: 0.00–600.00 sec. Pr.01-45=1: 0.00–6000.0 sec. The default of motor drive with 30HP and above: 60.00 / 60.0	10.00

	Pr.	Parameter Name	Setting Range	Default
✓	01-14	Acceleration time 2	Pr.01-45=0: 0.00–600.00 sec. Pr.01-45=1: 0.00–6000.0 sec. The default of motor drive with 30HP and above: 60.00 / 60.0	10.00
✓	01-15	Deceleration time 2	Pr.01-45=0: 0.00–600.00 sec. Pr.01-45=1: 0.00–6000.0 sec. The default of motor drive with 30HP and above: 60.00 / 60.0	10.00
✓	01-16	Acceleration time 3	Pr.01-45=0: 0.00–600.00 sec. Pr.01-45=1: 0.00–6000.0 sec. The default of motor drive with 30HP and above: 60.00 / 60.0	10.00
✓	01-17	Deceleration time 3	Pr.01-45=0: 0.00–600.00 sec. Pr.01-45=1: 0.00–6000.0 sec. The default of motor drive with 30HP and above: 60.00 / 60.0	10.00
✓	01-18	Acceleration time 4	Pr.01-45=0: 0.00–600.00 sec. Pr.01-45=1: 0.00–6000.0 sec. The default of motor drive with 30HP and above: 60.00 / 60.0	10.00
✓	01-19	Deceleration time 4	Pr.01-45=0: 0.00–600.00 sec. Pr.01-45=1: 0.00–6000.0 sec. The default of motor drive with 30HP and above: 60.00 / 60.0	10.00
✓	01-20	JOG acceleration time	Pr.01-45=0: 0.00–600.00 sec. Pr.01-45=1: 0.00–6000.0 sec. The default of motor drive with 30HP and above: 60.00 / 60.0	10.00
✓	01-21	JOG deceleration time	Pr.01-45=0: 0.00–600.00 sec. Pr.01-45=1: 0.00–6000.0 sec. The default of motor drive with 30HP and above: 60.00 / 60.0	10.00
✓	01-22	JOG frequency	0.00–599.00 Hz	6.00
✓	01-23	Switch frequency between first and fourth Accel./Decel.	0.00–599.00 Hz	0.00
✓	01-24	S-curve for acceleration begin time 1	Pr.01-45=0: 0.00–25.00 sec. Pr.01-45=1: 0.0–250.0 sec.	0.20
✓	01-25	S-curve for acceleration arrival time 2	Pr.01-45=0: 0.00–25.00 sec. Pr.01-45=1: 0.0–250.0 sec.	0.20
✓	01-26	S-curve for deceleration begin time 1	Pr.01-45=0: 0.00–25.00 sec. Pr.01-45=1: 0.0–250.0 sec.	0.20

	Pr.	Parameter Name	Setting Range	Default
✓	01-27	S-curve for deceleration arrival time 2	Pr.01-45=0: 0.00–25.00 sec. Pr.01-45=1: 0.0–250.0 sec.	0.20
	01-28	Skip frequency 1 (upper limit)	0.00–599.00 Hz	0.00
	01-29	Skip frequency 1 (lower limit)	0.00–599.00 Hz	0.00
	01-30	Skip frequency 2 (upper limit)	0.00–599.00 Hz	0.00
	01-31	Skip frequency 2 (lower limit)	0.00–599.00 Hz	0.00
	01-32	Skip frequency 3 (upper limit)	0.00–599.00 Hz	0.00
	01-33	Skip frequency 3 (lower limit)	0.00–599.00 Hz	0.00
	01-34	Zero-speed mode	0: Output waiting 1: Zero-speed operation 2: Minimum frequency (Refer to Pr.01-07 and Pr.01-41)	0
	01-35	Rated / base frequency of motor 2	0.00–599.00 Hz	60.00 / 50.00
	01-36	Rated / base output voltage of motor 2	230V models: 0.0–255.0 V 460V models: 0.0–510.0 V 575V models: 0.0–637.0 V 690V models: 0.0–765.0 V	200.0 400.0 600.0 660.0
	01-37	Mid-point frequency 1 of motor 2	0.00–599.00 Hz	3.00
✓	01-38	Mid-point voltage 1 of motor 2	230V models: 0.0–240.0 V 460V models: 0.0–480.0 V 575V models: 0.0–637.0 V 690V models: 0.0–720.0 V	11.0 22.0 0.0 0.0
	01-39	Mid-point frequency 2 of motor 2	0.00–599.00 Hz	1.50
✓	01-40	Mid-point voltage 2 of motor 2	230V models: 0.0–240.0 V 460V models: 0.0–480.0 V 575V models: 0.0–637.0 V 690V models: 0.0–720.0 V	5.0 10.0 0.0 0.0
	01-41	Minimum output frequency of motor 2	0.00–599.00 Hz	0.50
✓	01-42	Minimum output voltage of motor 2	230V models: 0.0–240.0 V 460V models: 0.0–480.0 V 575V models: 0.0–637.0 V 690V models: 0.0–720.0 V	1.0 2.0 0.0 0.0
	01-43	V/F curve selection	0: V/F curve determined by Pr.01-00–01-08 1: V/F curve to the power of 1.5 2: V/F curve to the power of 2 3: 60Hz, voltage saturation in 50Hz 4: 72Hz, voltage saturation in 60Hz	0

	Pr.	Parameter Name	Setting Range	Default
			5: 50Hz, decrease gradually with cube 6: 50Hz, decrease gradually with square 7: 60Hz, decrease gradually with cube 8: 60Hz, decrease gradually with square 9: 50Hz, medium starting torque 10: 50Hz, high starting torque 11: 60Hz, medium starting torque 12: 60Hz, high starting torque 13: 90Hz, voltage saturation in 60Hz 14: 120Hz, voltage saturation in 60Hz 15: 180Hz, voltage saturation in 60Hz	
✓	01-44	Auto-acceleration and auto-deceleration setting	0: Linear acceleration and deceleration 1: Auto-acceleration and linear deceleration 2: Linear acceleration and auto-deceleration 3: Auto-acceleration and auto-deceleration 4: Stall prevention by auto-acceleration and auto-deceleration (limited by Pr.01-12–Pr.01-21)	0
	01-45	Time unit for acceleration / deceleration and S-curve	0: Unit: 0.01 sec. 1: Unit: 0.1 sec.	0
✓	01-46	CANopen quick stop time	Pr.01-45=0: 0.00–600.00 sec. Pr.01-45=1: 0.0–6000.0 sec.	1.00
	01-49	Deceleration method selection	0: Normal deceleration 1: Over-voltage energy restriction 2: Traction energy control (TEC) 3: Electromagnetic energy traction control	0
✓	01-50	Electromagnetic traction energy consumption coefficient	0.00–5.00 Hz	0.50
✓	01-51	Flux-weakening overload stall prevention time	0.00–600.00 sec.	1.00

02 Digital Input / Output Parameters

Pr.	Parameter Name	Setting Range	Default
02-00	Two-wire / three-wire operation control	0: Two-wire mode 1, power on for operation control 1: Two-wire mode 2, power on for operation control 2: Three-wire, power on for operation control 7: Single-wire mode, the Servo ON terminal under position control mode (only the FWD terminal is valid)	0
02-01	Multi-function input command 1 (MI1)	0: No function 1: Multi-step speed command 1 / P2P position command 1 2: Multi-step speed command 2 / P2P position command 2 3: Multi-step speed command 3 / P2P position command 3 4: Multi-step speed command 4 / P2P position command 4 5: Reset 6: JOG operation (by external control or KPC-CC01) 7: Acceleration / deceleration speed inhibit 8: 1st and 2nd acceleration / deceleration time selection 9: 3rd and 4th acceleration / deceleration time selection 10: External Fault (EF) input (Pr.07-20) 11: Base Block (B.B) input from external 12: Output voltage stops 13: Cancel the setting of auto-acceleration / auto-deceleration time 14: Switch between motor 1 and motor 2 15: Rotating speed command from AVI 16: Rotating speed command from ACI 17: Rotating speed command from AUI 18: Forced to stop (Pr.07-20) 19: Frequency up command 20: Frequency down command 21: PID function disabled 22: Clear the counter 23: Input the counter value (MI6)	1
02-02	Multi-function input command 2 (MI2)		2
02-03	Multi-function input command 3 (MI3)		3
02-04	Multi-function input command 4 (MI4)		4
02-05	Multi-function input command 5 (MI5)		0
02-06	Multi-function input command 6 (MI6)		0
02-07	Multi-function input command 7 (MI7)		0
02-08	Multi-function input command 8 (MI8)		0
02-26	Input terminal of I/O extension card (MI10)		0
02-27	Input terminal of I/O extension card (MI11)		0
02-28	Input terminal of I/O extension card (MI12)		0
02-29	Input terminal of I/O extension card (MI13)		0
02-30	Input terminal of I/O extension card (MI14)		0
02-31	Input terminal of I/O extension card (MI15)		0

Pr.	Parameter Name	Setting Range	Default
		24: FWD JOG command 25: REV JOG command 26: TQC / FOC mode selection 27: ASR1 / ASR2 selection 28: Emergency stop (EF1) 29: Signal confirmation for Y-connection 30: Signal confirmation for Δ-connection 31: High torque bias (Pr.11-30) 32: Middle torque bias (Pr.11-31) 33: Low torque bias (Pr.11-32) 35: Enable single-point positioning 36: Enable P2P position teaching function– 37: Enable pulse-train position command position control 38: Disable write EEPROM function 39: Torque command direction 40: Force coasting to stop 41: HAND switch 42: AUTO switch 43: Enable resolution selection (Pr.02-48) 44: Negative limit switch (NL) 45: Positive limit switch (PL) 46: Homing (ORG) 47: Enable homing function 48: Mechanical gear ratio switch 49: Enable drive 50: Slave dEb action to execute 51: Selection for PLC mode bit 0 52: Selection for PLC mode bit 1 53: Trigger CANopen quick stop 55: Brake release 56: Local / Remote selection 88: P2P position command confirm 89: Speed / position control mode switch 0: Speed control mode 1: Position control mode 90: Position command source switch 0: Inputs from internal register 1: Inputs from external pulse	

	Pr.	Parameter Name	Setting Range	Default
✓	02-09	UP / DOWN key mode	0: UP / DOWN by the acceleration / deceleration time 1: UP / DOWN constant speed (Pr.02-10)	0
✓	02-10	Constant speed, acceleration / deceleration speed of the UP / DOWN key	0.001–1.000 Hz / ms	0.001
✓	02-11	Multi-function input response time	0.000–30.000 sec.	0.005
✓	02-12	Multi-function input mode selection	0000h–FFFFh (0: N.O.; 1: N.C.)	0000h
✓	02-13	Multi-function output 1 (Relay1)	0: No function 1: Indication during RUN 2: Operation speed reached 3: Desired frequency reached 1 (Pr.02-22) 4: Desired frequency reached 2 (Pr.02-24) 5: Zero speed (Frequency command) 6: Zero speed including STOP (Frequency command) 7: Over-torque 1 (Pr.06-06–06-08) 8: Over-torque 2 (Pr.06-09–06-11) 9: Drive is ready 10: Low voltage warning (Lv) (Pr.06-00) 11: Malfunction indication 12: Mechanical brake release (Pr.02-32) 13: Overheat warning (Pr.06-15) 14: Software brake signal indication (Pr.07-00) 15: PID feedback error (Pr.08-13, Pr.08-14) 16: Slip error (oSL) 17: Count value reached, does not return to 0 (Pr.02-20) 18: Count value reached, returns to 0 (Pr.02-19) 19: External interrupt B.B. input (Base Block) 20: Warning output 21: Over-voltage 22: Over-current stall prevention 23: Over-voltage stall prevention 24: Operation source 25: Forward command 26: Reverse command 27: Output when current ≥ Pr.02-33 28: Output when current < Pr.02-33	11
✓	02-14	Multi-function output 2 (Relay2)		1
✓	02-16	Multi-function output 3 (MO1)		66
✓	02-17	Multi-function output 4 (MO2)		0
✓	02-36	Output terminal of I/O extension card (MO10) or (RA10)		0
✓	02-37	Output terminal of I/O extension card (MO11) or (RA11)		0
✓	02-38	Output terminal of I/O extension card (RA12)		0
✓	02-39	Output terminal of I/O extension card (RA13)		0
✓	02-40	Output terminal of I/O extension card (RA14)		0
✓	02-41	Output terminal of I/O extension card (RA15)		0
✓	02-42	Output terminal of I/O extension card (MO16 virtual terminal)		0
✓	02-43	Output terminal of I/O extension card (MO17 virtual terminal)		0
✓	02-44	Output terminal of I/O extension card (MO18 virtual terminal)		0
✓	02-45	Output terminal of I/O extension card (MO19 virtual terminal)		0
✓	02-46	Output terminal of I/O extension card (MO20 virtual terminal)		0

Pr.	Parameter Name	Setting Range	Default
		29: Output when frequency ≥ Pr.02-34 30: Output when frequency < Pr.02-34 31: Y-connection for the motor coil 32: Δ-connection for the motor coil 33: Zero speed (actual output frequency) 34: Zero speed including stop (actual output frequency) 35: Error output selection 1 (Pr.06-23) 36: Error output selection 2 (Pr.06-24) 37: Error output selection 3 (Pr.06-25) 38: Error output selection 4 (Pr.06-26) 39: Position reached (Pr.11-65, Pr.11-66) 40: Speed reached (including stop) 42: Crane function 43: Motor actual speed detection 44: Low current output (use with Pr.06-71–06-73) 45: UVW output electromagnetic valve switch 46: Master dEb output 47: Closed brake output 49: Homing action completed ~~output~~ 50: Output control for CANopen 51: Analog output control for RS-485 interface (InnerCOM / Modbus) 52: Output control for communication cards 65: Output control for both CAN & 485 66: SO output logic A 67: Analog input level reached 68: SO output logic B 70: FAN warning output 75: Forward running status 76: Reverse running status	
02-18	Multi-function output direction	0000h–FFFFh (0: N.O.; 1: N.C.)	0000h
02-19	Terminal counting value reached (returns to 0)	0–65500	0
02-20	Preliminary counting value reached (does not return to 0)	0–65500	0
02-21	Digital output gain (DFM)	1–166	1
02-22	Desired frequency reached 1	0.00–599.00 Hz	60.00 / 50.00

	Pr.	Parameter Name	Setting Range	Default
✓	02-23	The width of the desired frequency reached 1	0.00–599.00 Hz	2.00
✓	02-24	Desired frequency reached 2	0.00–599.00 Hz	60.00 / 50.00
✓	02-25	The width of the desired frequency reached 2	0.00–599.00 Hz	2.00
	02-32	Brake delay time	0.000–65.000 sec.	0.000
✓	02-33	Output current level setting for multi-function output terminal	0–100%	0
✓	02-34	Output frequency setting for multi-function output terminal	0.00–599.00 Hz (Motor speed when using PG Card)	3.00
✓	02-35	External operation control selection after reset and reboot	0: Disable 1: Drive runs if the RUN command remains after reset or reboot	0
✓	02-47	Motor zero-speed level	0–65535 rpm	0
✓	02-48	Maximum frequency of resolution switch	0.00–599.00 Hz	60.00
✓	02-49	Switch delay time of maximum output frequency	0.000–65.000 sec.	0.000
	02-50	Display the status of multi-function input terminal	Monitor the status of multi-function input terminals	Read only
	02-51	Display the status of multi-function output terminal	Monitor the status of multi-function output terminals	Read only
	02-52	Display the external multi-function input terminals used by PLC	Monitor the status of PLC input terminals	Read only
	02-53	Display the external multi-function output terminals used by PLC	Monitor the status of PLC output terminals	Read only
	02-54	Display the frequency command executed by external terminal	0.00–599.00 Hz (Read only)	Read only
	02-56	Brake release check time	0.000–65.000 sec.	0.000
✓	02-57	Multi-function output terminal (function 42): brake current check point	0–100%	0
✓	02-58	Multi-function output terminal (function 42): brake frequency check point	0.00–599.00 Hz	0.00
	02-63	Frequency reached detection amplitude	0.00–599.00 Hz	0.00
	02-70	IO card types	1: EMC-BPS01 4: EMC-D611A	Read only

Pr.	Parameter Name	Setting Range	Default
		5: EMC-D42A 6: EMC-R6AA 11: EMC-A22A	
02-71	DFM output selection	0: Use frequency with speed control as DFM output frequency 1: Use frequency with system acceleration / deceleration as DFM output frequency	0
02-74	Internal / external multi-function input terminal selection	0000–FFFFh	0000h
02-75	Internal multi-function output terminal selection	0000–FFFFh	0000h

03 Analog Input / Output Parameters

	Pr.	Parameter Name	Setting Range	Default
✓	03-00	AVI analog input selection	0: No function 1: Frequency command (speed limit under torque control mode) 2: Torque command (torque limit under speed control mode) 3: Torque compensation command 4: PID target value 5: PID feedback signal 6: Thermistor (PTC / KTY-84) input value 7: Positive torque limit 8: Negative torque limit 9: Regenerative torque limit 10: Positive / negative torque limit 11: PT100 thermistor input value 13: PID compensation value	1
✓	03-01	ACI analog input selection		0
✓	03-02	AUI Analog input selection		0
✓	03-03	AVI analog input bias	-100.0–100.0%	0.0
✓	03-04	ACI analog input bias	-100.0–100.0%	0.0
✓	03-05	AUI analog input bias	-100.0–100.0%	0.0
✓	03-07	AVI positive / negative bias mode	0: No bias 1: Lower than or equal to bias 2: Greater than or equal to bias 3: The absolute value of the bias voltage while serving as the center 4: Bias serves as the center	0
✓	03-08	ACI positive / negative bias mode		
✓	03-09	AUI positive / negative bias mode		
	03-10	Reverse setting when analog signal input is negative frequency	0: Negative frequency input is not allowed. The digital keypad or external terminal controls the forward and reverse direction. 1: Negative frequency is **allowed**. Positive frequency = run in a forward direction; Negative frequency = run in a reverse direction. The digital keypad or external terminal control cannot change the running direction.	0
✓	03-11	AVI analog input gain	-500.0–500.0%	100.0
✓	03-12	ACI analog input gain	-500.0–500.0%	100.0
✓	03-13	AUI analog positive input gain	-500.0–500.0%	100.0
✓	03-14	AUI analog negative input gain	-500.0–500.0%	100.0
✓	03-15	AVI analog input filter time	0.00–20.00 sec.	0.01
✓	03-16	ACI analog input filter time	0.00–20.00 sec.	0.01

	Pr.	Parameter Name	Setting Range	Default
✓	03-17	AUI analog input filter time	0.00–20.00 sec.	0.01
✓	03-18	Analog input addition function	0: Disable (AVI, ACI, AUI) 1: Enable	0
	03-19	Signal loss selection for the analog input 4–20 mA	0: Disable 1: Continue operation at the last frequency 2: Decelerate to 0 Hz 3: Stop immediately and display ACE	0
✓	03-20	AFM1 Multi-function output 1	0: Output frequency (Hz) 1: Frequency command (Hz) 2: Motor speed (Hz) 3: Output current (rms) 4: Output voltage 5: DC bus voltage 6: Power factor 7: Power 8: Output torque 9: AVI 10: ACI 11: AUI 12: Iq current command 13: Iq feedback value 14: Id current command 15: Id feedback value 18: Torque command 19: PG2 frequency command 20: CANopen analog output 21: RS-485 analog output 22: Communication card analog output 23: Constant voltage output 25: CANopen and RS-485 analog output	0
✓	03-23	AFM2 Multi-function output 2		0
✓	03-21	AFM1 Analog output gain 1	0.0–500.0%	100.0
✓	03-22	AFM1 Analog output 1 in REV direction	0: Absolute value in output voltage 1: Reverse output 0 V; forward output 0–10 V 2: Reverse output 5–0 V; forward output 5–10 V	0
✓	03-24	AFM2 Analog output gain 2	0.0–500.0%	100.0
✓	03-25	AFM2 Analog output 2 in REV direction	0: Absolute value in output voltage 1: Reverse output 0 V; forward output 0–10 V 2: Reverse output 5–0 V; forward output 5–10 V	0
✓	03-27	AFM2 output bias	-100.00–100.00%	0.00
✓	03-28	AVI terminal input selection	0: 0–10 V 1: 0–20 mA 2: 4–20 mA	0

	Pr.	Parameter Name	Setting Range	Default
✓	03-29	ACI terminal input selection	0: 4–20 mA 1: 0–10 V 2: 0–20 mA	0
	03-30	PLC analog output terminal status	Monitor the status of the PLC analog output terminals	Read only
✓	03-31	AFM2 output selection	0: 0–20 mA output 1: 4–20 mA output	0
✓	03-32	AFM1 DC output setting level	0.00–100.00%	0.00
✓	03-33	AFM2 DC output setting level	0.00–100.00%	0.00
✓	03-35	AFM1 output filter time	0.00–20.00 sec.	0.01
✓	03-36	AFM2 output filter time	0.00–20.00 sec.	0.01
✓	03-44	Multi-function output (MO) by AI level source	0: AVI 1: ACI 2: AUI	0
✓	03-45	AI upper level (MO)	-100.00–100.00%	50.00
✓	03-46	AI lower level (MO)	-100.00–100.00%	10.00
✓	03-50	Analog input curve selection	0: Normal curve 1: Three-point curve of AVI 2: Three-point curve of ACI 3: Three-point curve of AVI & ACI 4: Three-point curve of AUI 5: Three-point curve of AVI & AUI 6: Three-point curve of ACI & AUI 7: Three-point curve of AVI & ACI & AUI	0
✓	03-51	AVI lowest point	Pr.03-28=0, 0.00–10.00 V Pr.03-28=1, 0.00–20.00 mA Pr.03-28=2, 4.00–20.00 mA	0.00 0.00 4.00
✓	03-52	AVI proportional lowest point	-100.00–100.00%	0.00
✓	03-53	AVI mid-point	Pr.03-28=0, 0.00–10.00 V Pr.03-28=1, 0.00–20.00 mA Pr.03-28=2, 4.00–20.00 mA	5.00 10.00 12.00
✓	03-54	AVI proportional mid-point	-100.00–100.00%	50.00
✓	03-55	AVI highest point	Pr.03-28=0, 0.00–10.00 V Pr.03-28=1, 0.00–20.00 mA Pr.03-28=2, 4.00–20.00 mA	10.00 20.00 20.00
✓	03-56	AVI proportional highest point	-100.00–100.00%	100.00
✓	03-57	ACI lowest point	Pr.03-29=0, 4.00–20.00 mA Pr.03-29=1, 0.00–10.00 V Pr.03-29=2, 0.00–20.00 mA	4.00 0.00 0.00
✓	03-58	ACI proportional lowest point	-100.00–100.00%	0.00

	Pr.	Parameter Name	Setting Range	Default
✓	03-59	ACI mid-point	Pr.03-29=0, 4.00–20.00 mA Pr.03-29=1, 0.00–10.00 V Pr.03-29=2, 0.00–20.00 mA	12.00 5.00 10.00
✓	03-60	ACI proportional mid-point	-100.00–100.00%	50.00
✓	03-61	ACI highest point	Pr.03-29=0, 4.00–20.00 mA Pr.03-29=1, 0.00–10.00 V Pr.03-29=2, 0.00–20.00 mA	20.00 10.00 20.00
✓	03-62	ACI proportional highest point	-100.00–100.00%	100.00
✓	03-63	Positive AUI voltage lowest point	0.00–10.00 V	0.00
✓	03-64	Positive AUI voltage proportional lowest point	-100.00–100.00%	0.00
✓	03-65	Positive AUI voltage mid-point	0.00–10.00 V	5.00
✓	03-66	Positive AUI voltage proportional mid-point	-100.00–100.00%	50.00
✓	03-67	Positive AUI voltage highest point	0.00–10.00 V	10.00
✓	03-68	Positive AUI voltage proportional highest point	-100.00–100.00%	100.00
✓	03-69	Negative AUI voltage highest point	-10.00–0.00 V	0.00
✓	03-70	Negative AUI voltage proportional highest point	-100.00–100.00%	0.00
✓	03-71	Negative AUI voltage mid-point	-10.00–0.00 V	-5.00
✓	03-72	Negative AUI voltage proportional mid-point	-100.00–100.00%	-50.00
✓	03-73	Negative AUI voltage lowest point	-10.00–0.00 V	-10.00
✓	03-74	Negative AUI voltage proportional lowest point	-100.00–100.00%	-100.00

04 Multi-step Speed Parameters

	Pr.	Parameter Name	Setting Range	Default
✓	04-00	1st step speed frequency	0.00–599.00 Hz	0.00
✓	04-01	2nd step speed frequency	0.00–599.00Hz	0.00
✓	04-02	3rd step speed frequency	0.00–599.00 Hz	0.00
✓	04-03	4th step speed frequency	0.00–599.00 Hz	0.00
✓	04-04	5th step speed frequency	0.00–599.00 Hz	0.00
✓	04-05	6th step speed frequency	0.00–599.00 Hz	0.00
✓	04-06	7th step speed frequency	0.00–599.00 Hz	0.00
✓	04-07	8th step speed frequency	0.00–599.00 Hz	0.00
✓	04-08	9th step speed frequency	0.00–599.00 Hz	0.00
✓	04-09	10th step speed frequency	0.00–599.00 Hz	0.00
✓	04-10	11th step speed frequency	0.00–599.00 Hz	0.00
✓	04-11	12th step speed frequency	0.00–599.00 Hz	0.00
✓	04-12	13th step speed frequency	0.00–599.00 Hz	0.00
✓	04-13	14th step speed frequency	0.00–599.00 Hz	0.00
✓	04-14	15th step speed frequency	0.00–599.00 Hz	0.00
✓	04-15	Position command 1 (rotation)	-30000–30000	0
✓	04-16	Position command 1 (pulse)	-32767–32767	0
✓	04-17	Position command 2 (rotation)	-30000–30000	0
✓	04-18	Position command 2 (pulse)	-32767–32767	0
✓	04-19	Position command 3 (rotation)	-30000–30000	0
✓	04-20	Position command 3 (pulse)	-32767–32767	0
✓	04-21	Position command 4 (rotation)	-30000–30000	0
✓	04-22	Position command 4 (pulse)	-32767–32767	0
✓	04-23	Position command 5 (rotation)	-30000–30000	0
✓	04-24	Position command 5 (pulse)	-32767–32767	0
✓	04-25	Position command 6 (rotation)	-30000–30000	0
✓	04-26	Position command 6 (pulse)	-32767–32767	0
✓	04-27	Position command 7 (rotation)	-30000–30000	0
✓	04-28	Position command 7 (pulse)	-32767–32767	0
✓	04-29	Position command 8 (rotation)	-30000–30000	0
✓	04-30	Position command 8 (pulse)	-32767–32767	0
✓	04-31	Position command 9 (rotation)	-30000–30000	0
✓	04-32	Position command 9 (pulse)	-32767–32767	0
✓	04-33	Position command 10 (rotation)	-30000–30000	0
✓	04-34	Position command 10 (pulse)	-32767–32767	0
✓	04-35	Position command 11 (rotation)	-30000–30000	0
✓	04-36	Position command 11 (pulse)	-32767–32767	0

	Pr.	Parameter Name	Setting Range	Default
✓	04-37	Position command 12 (rotation)	-30000–30000	0
✓	04-38	Position command 12 (pulse)	-32767–32767	0
✓	04-39	Position command 13 (rotation)	-30000–30000	0
✓	04-40	Position command 13 (pulse)	-32767–32767	0
✓	04-41	Position command 14 (rotation)	-30000–30000	0
✓	04-42	Position command 14 (pulse)	-32767–32767	0
✓	04-43	Position command 15 (rotation)	-30000–30000	0
✓	04-44	Position command 15 (pulse)	-32767–32767	0
✓	04-50	PLC buffer 0	0–65535	0
✓	04-51	PLC buffer 1	0–65535	0
✓	04-52	PLC buffer 2	0–65535	0
✓	04-53	PLC buffer 3	0–65535	0
✓	04-54	PLC buffer 4	0–65535	0
✓	04-55	PLC buffer 5	0–65535	0
✓	04-56	PLC buffer 6	0–65535	0
✓	04-57	PLC buffer 7	0–65535	0
✓	04-58	PLC buffer 8	0–65535	0
✓	04-59	PLC buffer 9	0–65535	0
✓	04-60	PLC buffer 10	0–65535	0
✓	04-61	PLC buffer 11	0–65535	0
✓	04-62	PLC buffer 12	0–65535	0
✓	04-63	PLC buffer 13	0–65535	0
✓	04-64	PLC buffer 14	0–65535	0
✓	04-65	PLC buffer 15	0–65535	0
✓	04-66	PLC buffer 16	0–65535	0
✓	04-67	PLC buffer 17	0–65535	0
✓	04-68	PLC buffer 18	0–65535	0
✓	04-69	PLC buffer 19	0–65535	0
✓	04-70	PLC Application parameter 0	0–65535	0
✓	04-71	PLC Application parameter 1	0–65535	0
✓	04-72	PLC Application parameter 2	0–65535	0
✓	04-73	PLC Application parameter 3	0–65535	0
✓	04-74	PLC Application parameter 4	0–65535	0
✓	04-75	PLC Application parameter 5	0–65535	0
✓	04-76	PLC Application parameter 6	0–65535	0
✓	04-77	PLC Application parameter 7	0–65535	0
✓	04-78	PLC Application parameter 8	0–65535	0
✓	04-79	PLC Application parameter 9	0–65535	0
✓	04-80	PLC Application parameter 10	0–65535	0

	Pr.	Parameter Name	Setting Range	Default
✓	04-81	PLC Application parameter 11	0–65535	0
✓	04-82	PLC Application parameter 12	0–65535	0
✓	04-83	PLC Application parameter 13	0–65535	0
✓	04-84	PLC Application parameter 14	0–65535	0
✓	04-85	PLC Application parameter 15	0–65535	0
✓	04-86	PLC Application parameter 16	0–65535	0
✓	04-87	PLC Application parameter 17	0–65535	0
✓	04-88	PLC Application parameter 18	0–65535	0
✓	04-89	PLC Application parameter 19	0–65535	0
✓	04-90	PLC Application parameter 20	0–65535	0
✓	04-91	PLC Application parameter 21	0–65535	0
✓	04-92	PLC Application parameter 22	0–65535	0
✓	04-93	PLC Application parameter 23	0–65535	0
✓	04-94	PLC Application parameter 24	0–65535	0
✓	04-95	PLC Application parameter 25	0–65535	0
✓	04-96	PLC Application parameter 26	0–65535	0
✓	04-97	PLC Application parameter 27	0–65535	0
✓	04-98	PLC Application parameter 28	0–65535	0
✓	04-99	PLC Application parameter 29	0–65535	0

05 Motor Parameters

	Pr.	Parameter Name	Setting Range	Default
	05-00	Motor parameter auto-tuning	0: No function 1: Simple rolling auto-tuning for induction motor (IM) 2: Static auto-tuning for induction motor (IM) 4: Dynamic test for PM magnetic pole (with the running in forward direction) 5: Rolling auto-tuning for PM (IPM / SPM) 6: Advanced rolling auto-tuning for IM motor flux curve 11: SynRM parameter auto-tuning 12: FOC sensorless inertia estimation 13: Static auto-tuning for PM	0
	05-01	Full-load current for induction motor 1 (A)	Depending on the model power	Depending on the model power
✓	05-02	Rated power for induction motor 1 (kW)	0.00–655.35 kW	Depending on the model power
✓	05-03	Rated speed for induction motor 1 (rpm)	0–xxxx rpm (Depending on the motor's number of poles)	Depending on the motor's number of poles
	05-04	Number of poles for induction motor 1	2–64	4
	05-05	No-load current for induction motor 1 (A)	0.00–Pr.05-01 default	Depending on the model power
	05-06	Stator resistance (Rs) for induction motor 1	0.000–65.535 Ω	Depending on the model power
	05-07	Rotor resistance (Rr) for induction motor 1	0.000–65.535 Ω	0.000
	05-08	Magnetizing inductance (Lm) for induction motor 1	0.0–6553.5 mH	0.0
	05-09	Stator inductance (Lx) for induction motor 1	0.0–6553.5 mH	0.0
	05-13	Full-load current for induction motor 2 (A)	Depending on the model power	Depending on the model power
✓	05-14	Rated power for induction motor 2 (kW)	0.00–655.35 kW	Depending on the model power
✓	05-15	Rated speed for induction motor 2 (rpm)	0–xxxx rpm (Depending on the motor's number of poles)	Depending on the motor's number of poles
	05-16	Number of poles for induction motor 2	2–64	4

	Pr.	Parameter Name	Setting Range	Default
	05-17	No-load current for induction motor 2 (A)	0.00–Pr.05-13 default	Depending on the model power
	05-18	Stator resistance (Rs) for induction motor 2	0.000–65.535 Ω	Depending on the model power
	05-19	Rotor resistance (Rr) for induction motor 2	0.000–65.535 Ω	0.000
	05-20	Magnetizing inductance (Lm) for induction motor 2	0.0–6553.5 mH	0.0
	05-21	Stator inductance (Lx) for induction motor 2	0.0–6553.5 mH	0.0
	05-22	Induction motor 1 / 2 selection	1: Motor 1 2: Motor 2	1
✓	05-23	Frequency for Y-connection / Δ-connection switch for an induction motor	0.00–599.00 Hz	60.00
	05-24	Y-connection / Δ-connection switch for an induction motor	0: Disable 1: Enable	0
✓	05-25	Delay time for Y-connection / Δ-connection switch for an induction motor	0.000–60.000 sec.	0.200
	05-28	Accumulated Watt-hour for a motor (W-hour)	0.0–6553.5	Read only
	05-29	Accumulated Watt-hour for a motor in low word (kW-hour)	0.0–6553.5	Read only
	05-30	Accumulated Watt-hour for a motor in high word (MW-hour)	0–65535	Read only
	05-31	Accumulated motor operation time (minutes)	0–1439	0
	05-32	Accumulated motor operation time (days)	0–65535	0
	05-33	Induction motor (IM) or permanent magnet synchronous AC motor (PM) selection	0: IM 1: SPM 2: IPM 3: SynRM	0
	05-34	Full-load current for a permanent magnet synchronous AC motor / reluctance motor	Depending on the model power	Depending on the model power
✓	05-35	Rated power for a permanent magnet synchronous AC motor / reluctance motor	0.00–655.35 kW	Depending on the model power

	Pr.	Parameter Name	Setting Range	Default
✓	05-36	Rated speed for a permanent magnet synchronous AC motor / reluctance motor	0–65535 rpm	2000
	05-37	Number of poles for a permanent magnet synchronous AC motor / reluctance motor	0–65535	10
	05-38	System inertia for a permanent magnet synchronous AC motor / reluctance motor	0.0–6553.5 kg-cm^2	Depending on the motor power
	05-39	Stator resistance for a permanent magnet synchronous AC motor / reluctance motor	0.000–65.535 Ω	0.000
	05-40	Permanent magnet synchronous AC motor / reluctance motor Ld	0.00–655.35 mH	0.00
	05-41	Permanent magnet synchronous AC motor / reluctance motor Lq	0.00–655.35 mH	0.00
✓	05-42	PG offset angle for a permanent magnet synchronous AC motor / reluctance motor	0.0–360.0°	0.0
✓	05-43	Ke parameter of a permanent magnet synchronous AC motor / reluctance motor	0–65535 (Unit: V / krpm)	0

06 Protection Parameters

	Pr.	Parameter Name	Setting Range	Default
✓	06-00	Low voltage level	230V models: Frame A–D: 150.0–220.0 V_{DC} Frame E and above: 190.0–220.0 V_{DC} 460V models: Frame A–D: 300.0–440.0 V_{DC} Frame E and above: 380.0–440.0 V_{DC} 575V models: 420.0–520.0 V_{DC} 690V models: 450.0–660.0 V_{DC}	 180.0 200.0 360.0 400.0 470.0 480.0
✓	06-01	Over-voltage stall prevention	0: Disabled 230V models: 0.0–450.0 V_{DC} 460V models: 0.0–900.0 V_{DC} 575V models: 0.0–920.0 V_{DC} 690V models: 0.0–1087.0 V_{DC}	 380.0 760.0 920.0 1087.0
✓	06-02	Selection for over-voltage stall prevention	0: Traditional over-voltage stall prevention 1: Smart over-voltage stall prevention	0
✓	06-03	Over-current stall prevention during acceleration	230V / 460V models Heavy load: 0–195% (100% corresponds to the rated current of the drive) Super Heavy load: 0–210% (100% corresponds to the rated current of the drive) 575V / 690V models Light load: 0–125% (100% corresponds to the rated current of the drive) Normal load: 0–150% (100% corresponds to the rated current of the drive) Heavy load: 0–180% (100% corresponds to the rated current of the drive)	 150 150 120 120 150
✓	06-04	Over-current stall prevention during operation	230V / 460V models Heavy load: 0–195% (100% corresponds to the rated current of the drive) Super Heavy load: 0–210% (100% corresponds to the rated current of the drive) 575V / 690V models Light load: 0–125% (100% corresponds to the rated current of the drive) Normal load: 0–150% (100% corresponds to the rated current of the drive) Heavy load: 0–180% (100% corresponds to the rated current of the drive)	 150 150 120 120 150

	Pr.	Parameter Name	Setting Range	Default
✓	06-05	Acceleration / deceleration time selection for stall prevention at constant speed	0: By current acceleration / deceleration time 1: By the first acceleration / deceleration time 2: By the second acceleration / deceleration time 3: By the third acceleration / deceleration time 4: By the fourth acceleration / deceleration time 5: By Auto-acceleration / auto-deceleration	0
✓	06-06	Over-torque detection selection (OT1)	0: No function 1: Continue operation after over-torque detection during constant speed operation 2: Stop after over-torque detection during constant speed operation 3: Continue operation after over-torque detection during RUN 4: Stop after over-torque detection during RUN	0
✓	06-07	Over-torque detection level (OT1)	10–250% (100% corresponds to the rated current of the drive)	120
✓	06-08	Over-torque detection time (OT1)	0.0–60.0 sec.	0.1
✓	06-09	Over-torque detection selection (OT2)	0: No function 1: Continue operation after over-torque detection during constant speed operation 2: Stop after over-torque detection during constant speed operation 3: Continue operation after over-torque detection during RUN 4: Stop after Over-torque detection during RUN	0
✓	06-10	Over-torque detection level (OT2)	10–250% (100% corresponds to the rated current of the drive)	120
✓	06-11	Over-torque detection time (OT2)	0.0–60.0 sec.	0.1
	06-12	Current limit	230V / 460V models: 0–195% (100% corresponds to the rated current of the drive) 575V / 690V models: 0–250% (100% corresponds to the rated current of the drive)	190 170
✓	06-13	Electronic thermal relay selection 1 (motor 1)	0: Inverter motor (with external forced cooling) 1: Standard motor (motor with fan on the shaft) 2: Disable	2
✓	06-14	Electronic thermal relay action time 1 (motor 1)	30.0–600.0 sec.	60.0
✓	06-15	Temperature level overheat (OH) warning	0.0–110.0°C	105.0

	Pr.	Parameter Name	Setting Range	Default
✓	06-16	Stall prevention limit level (Weak magnetic field current stall prevention level)	230V / 460V models: 0–100% (refer to Pr.06-03) 575V / 690V models: 0–100% (refer to Pr.06-03)	100 50
	06-17	Fault record 1	0: No fault record 1: Over-current during acceleration (ocA) 2: Over-current during deceleration (ocd) 3: Over-current during steady operation (ocn) 4: Ground fault (GFF) 5: IGBT short-circuit between upper bridge and lower bridge (occ) 6: Over-current at stop (ocS) 7: Over-voltage during acceleration (ovA) 8: Over-voltage during deceleration (ovd) 9: Over-voltage at constant speed (ovn) 10: Over-voltage at stop (ovS) 11: Low-voltage during acceleration (LvA) 12: Low-voltage during deceleration (Lvd) 13: Low-voltage at constant speed (Lvn) 14: Low-voltage at stop (LvS) 15: Phase loss protection (OrP) 16: IGBT overheating (oH1) 17: Heatsink overheating (oH2) 18: IGBT temperature detection failure (tH1o) 19: Capacitor hardware error (tH2o) 21: Over load (oL) 22: Electronic thermal relay 1 protection (EoL1) 23: Electronic thermal relay 2 protection (EoL2) 24: Motor overheating (oH3) (PTC / PT100) 26: Over torque 1 (ot1) 27: Over torque 2 (ot2) 28: Under current (uC) 29: Limit error (LiT) 30: EEPROM write error (cF1) 31: EEPROM read error (cF2) 33: U-phase error (cd1) 34: V-phase error (cd2) 35: W-phase error (cd3) 36: cc (current clamp) hardware error (Hd0) 37: oc (over-current) hardware error (Hd1) 38: ov (over-voltage) hardware error (Hd2)	0
	06-18	Fault record 2		0
	06-19	Fault record 3		0
	06-20	Fault record 4		0
	06-21	Fault record 5		0
	06-22	Fault record 6		0

Pr.	Parameter Name	Setting Range	Default
		39: occ hardware error (Hd3) 40: Auto-tuning error (AUE) 41: PID loss ACI (AFE) 42: PG feedback error (PGF1) 43: PG feedback loss (PGF2) 44: PG feedback stall (PGF3) 45: PG slip error (PGF4) 48: ACI loss (ACE) 49: External fault (EF) 50: Emergency stop (EF1) 51: External base block (bb) 52: Enter wrong password three times and locked (Pcod) 53: SW code error (ccod) 54: Illegal command (CE1) 55: Illegal data address (CE2) 56: Illegal data value (CE3) 57: Data is written to read-only address (CE4) 58: Modbus transmission time-out (CE10) 60: Brake transistor error (bF) 61: Y-connection / Δ-connection switch error (ydc) 62: Deceleration energy backup error (dEb) 63: Over slip error (oSL) 64: Electric valve switch error (ryF) 65: Hardware error of PG card (PGF5) 68: Reverse direction of the speed feedback (SdRv) 69: Over speed rotation feedback (SdOr) 70: Large deviation of speed feedback (SdDe) 71: Watchdog (WDTT) (applied to 230V / 460V models) 72: STO loss 1 (STL1) 73: Emergency stop for external safety (S1) 75: External brake error (Brk) (applied to 230V / 460V models) 76: Safe torque off (STO) 77: STO loss 2 (STL2) 78: STO loss 3 (STL3) 82: Output phase loss U phase (OPHL) 83: Output phase loss V phase (OPHL) 84: Output phase loss W phase (OPHL) 85: PG ABZ line off (AboF) (PG-02U)	

	Pr.	Parameter Name	Setting Range	Default
			86: PG UVW line off (UvoF) (PG-02U) 87: Overload protection at low frequency (oL3) 89: Rotor position detection error (RoPd) 90: Force to stop (FStp) 92: Pulse tuning Ld / Lq error (LEr) 93: CPU error 0 (TRAP) (Applied to 230V / 460V models) 101: CANopen guarding error (CGdE) 102: CANopen heartbeat error (CHbE) 104: CANopen bus off error (CbFE) 105: CANopen index error (CidE) 106: CANopen station address error (CAdE) 107: CANopen memory error (CFrE) 111: InrCOM time-out error (ictE) 112: PM sensorless shaft lock error (SfLK) 142: Auto-tune error 1 (no feedback current error) (AUE1) (applied to 230V / 460V models) 143: Auto-tune error 2 (motor phase loss error) (AUE2) (applied to 230V / 460V models) 144: Auto-tune error 3 (no-load current I_0 measuring error) (AUE3) (applied to 230V / 460V models) 148: Auto-tune error 4 (leakage inductance Lsigma measuring error) (AUE4) (applied to 230V / 460V models) 171: Over position error (oPEE)	
✓	06-23	Fault output option 1	0–65535 (refer to bit table for fault code)	0
✓	06-24	Fault output option 2	0–65535 (refer to bit table for fault code)	0
✓	06-25	Fault output option 3	0–65535 (refer to bit table for fault code)	0
✓	06-26	Fault output option 4	0–65535 (refer to bit table for fault code)	0
✓	06-27	Electronic thermal relay selection 2 (motor 2)	0: Inverter motor (with external forced cooling) 1: Standard motor (motor with fan on the shaft) 2: Disable	2
✓	06-28	Electronic thermal relay action time 2 (motor 2)	30.0–600.0 sec.	60.0
✓	06-29	PTC detection selection / PT100 motion	0: Warn and continue operation 1: Fault and ramp to stop 2: Fault and coast to stop 3: No warning	0
✓	06-30	PTC level / KTY84 Level	0.0–100.0%	50.0
	06-31	Frequency command at malfunction	0.00–599.00 Hz	Read only

	Pr.	Parameter Name	Setting Range	Default
	06-32	Output frequency at malfunction	0.00–599.00 Hz	Read only
	06-33	Output voltage at malfunction	0.0–6553.5 V	Read only
	06-34	DC bus voltage at malfunction	0.0–6553.5 V	Read only
	06-35	Output current at malfunction	0.0–6553.5 Amp	Read only
	06-36	IGBT temperature at malfunction	-3276.7–3276.7°C	Read only
	06-37	Capacitance temperature at malfunction	-3276.7–3276.7°C	Read only
	06-38	Motor speed at malfunction	-32767–32767 rpm	Read only
	06-39	Torque command at malfunction	-32767–32767%	Read only
	06-40	Status of the multi-function input terminal at malfunction	0000h–FFFFh	Read only
	06-41	Status of the multi-function output terminal at malfunction	0000h–FFFFh	Read only
	06-42	Drive status at malfunction	0000h–FFFFh	Read only
✓	06-44	STO latch selection	0: STO latch 1: STO no latch	0
✓	06-45	Output phase loss detection action (OPHL)	0: Warn and continue operation 1: Fault and ramp to stop 2: Fault and coast to stop 3: No warning	3
✓	06-46	Detection time for output phase loss	230V / 460V models: 0.000–65.535 sec. 575V / 690V models: 0.000–65.535 sec.	3.000 0.500
✓	06-47	Current detection level for output phase loss	0.00–100.00%	1.00
✓	06-48	DC brake time for output phase loss	0.000–65.535 sec.	0.000
✓	06-49	LvX auto-reset	0: Disable 1: Enable	0
✓	06-50	Time for input phase loss detection	0.00–600.00 sec.	0.20
	06-51	Capacitance oH warning level (applied to 230V / 460V models)	0.0–110.0 degree	Depending on the model power

	Pr.	Parameter Name	Setting Range	Default
✓	06-52	Ripple of input phase loss	230V models: 0.0–160.0 V_{DC} 460V models: 0.0–320.0 V_{DC} 575V models: 0.0–400.0 V_{DC} 690V models: 0.0–480.0 V_{DC}	30.0 60.0 75.0 90.0
✓	06-53	Input phase loss detection action (OrP)	0: Fault and ramp to stop 1: Fault and coast to stop	0
✓	06-55	Derating protection	0: Auto-decrease carrier frequency and limit output current 1: Constant carrier frequency and limit output current 2: Auto-decrease carrier frequency	0
✓	06-56	PT100 voltage level 1	0.000–10.000 V	5.000
✓	06-57	PT100 voltage level 2	0.000–10.000 V	7.000
✓	06-58	PT100 level 1 frequency protection	0.00–599.00 Hz	0.00
✓	06-59	PT100 activation level 1 protection frequency delay time	0–6000 sec.	60
✓	06-60	Software detection GFF current level	0.0–200.0%	60.0
✓	06-61	Software detection GFF filter time	0.00–655.35 sec.	0.10
	06-62	dEb reset bias level (applied to 230V / 460V models)	230V models: 0.0–100 V_{DC} 460V models: 0.0–200.0 V_{DC}	20.0 40.0
	06-63	Operation time of fault record 1 (Days)	0–65535 days	Read only
	06-64	Operation time of fault record 1 (Minutes)	0–1439 min.	Read only
	06-65	Operation time of fault record 2 (Days)	0–65535 days	Read only
	06-66	Operation time of fault record 2 (Minutes)	0–1439 min.	Read only
	06-67	Operation time of fault record 3 (Days)	0–65535 days	Read only
	06-68	Operation time of fault record 3 (Minutes)	0–1439 min.	Read only
	06-69	Operation time of fault record 4 (Days)	0–65535 days	Read only
	06-70	Operation time of fault record 4 (Minutes)	0–1439 min.	Read only
✓	06-71	Low current setting level	0.0–100.0%	0.0
✓	06-72	Low current detection time	0.00–360.00 sec.	0.00
✓	06-73	Low current action	0: No function 1: Fault and coast to stop	0

Pr.	Parameter Name	Setting Range	Default
		2: Fault and ramp to stop by the second deceleration time 3: Warn and continue operation	
06-86	PTC Type (applied to 230V / 460V models)	0–1 0: PTC 1: KTY84-130	0

07 Special Parameters

	Pr.	Parameter Name	Setting Range	Default
✓	07-00	Software brake chopper action level	230V models: 350.0–450.0 V_{DC} 460V models: 700.0–900.0 V_{DC} 575V models: 850.0–1116.0 V_{DC} 690V models: 939.0–1318.0 V_{DC}	370.0 740.0 895.0 1057.0
✓	07-01	DC brake current level	0–100%	0
✓	07-02	DC brake time at start-up	0.0–60.0 sec.	0.0
✓	07-03	DC brake time at STOP	0.0–60.0 sec.	0.0
✓	07-04	DC brake frequency at STOP	0.00–599.00 Hz	0.00
✓	07-05	Voltage increasing gain	1–200%	100
✓	07-06	Restart after momentary power loss	0: Stop operation 1: Speed tracking by the speed before the power loss 2: Speed tracking by the minimum output frequency	0
✓	07-07	Allowed power loss duration	0.0–20.0 sec.	2.0
✓	07-08	Base block time	0.0–5.0 sec.	Depending on the model power
✓	07-09	Current limit of speed tracking	20–200%	100
✓	07-10	Restart after fault action	0: Stop operation 1: Speed tracking by current speed 2: Speed tracking by minimum output frequency	0
✓	07-11	Number of times of restart after fault	0–10	0
✓	07-12	Speed tracking during start-up	0: Disable 1: Speed tracking by the maximum output frequency 2: Speed tracking by the motor frequency at start-up 3: Speed tracking by the minimum output frequency	0
✓	07-13	dEb function selection	0: Disable 1: dEb with auto-acceleration / auto-deceleration, the drive does not output the frequency after the power is restored. 2: dEb with auto-acceleration / auto-deceleration, the drive outputs the frequency after the power is restored 3: dEb low-voltage control, then the drive's voltage increases to 350 V_{DC} / 700 V_{DC} and ramps to stop after low frequency 4: dEb high-voltage control of 350 V_{DC} / 700 V_{DC}, and the drive ramps to stop	0
	07-14	dEb function reset time	0.0–25.0 sec.	3.0
✓	07-15	Dwell time at acceleration	0.00–600.00 sec.	0.00
✓	07-16	Dwell frequency at acceleration	0.00–599.00 Hz	0.00
✓	07-17	Dwell time at deceleration	0.00–600.00 sec.	0.00

	Pr.	Parameter Name	Setting Range	Default
✓	07-18	Dwell frequency at deceleration	0.00–599.00 Hz	0.00
✓	07-19	Fan cooling control	0: Fan always ON 1: Fan is OFF after the AC motor drive stops for one minute 2: Fan is ON when the AC motor drive runs; fan is OFF when the AC motor drive stops. 3: Fan turns ON when temperature (IGBT) reaches around 60°C. 4: Fan always OFF	0
✓	07-20	Emergency stop (EF) & force to stop selection	0: Coast to stop 1: Stop by the first deceleration time 2: Stop by the second deceleration time 3: Stop by the third deceleration time 4: Stop by the fourth deceleration time 5: System deceleration 6: Automatic deceleration	0
✓	07-21	Automatic energy-saving selection	0: Disabled 1: Power factor energy-saving improvement (for VF, SVC and VFPG control modes) 2: Automatic energy-saving (AES) optimization (for VF, SVC and VFPG control modes)	0
✓	07-22	Energy-saving gain	10–1000%	100
✓	07-23	Automatic voltage regulation (AVR) function	0: Enable AVR 1: Disable AVR 2: Disable AVR during deceleration	0
✓	07-24	Torque command filter time (V/F and SVC control mode)	0.001–10.000 sec.	0.500
✓	07-25	Slip compensation filter time (V/F and SVC control mode)	0.001–10.000 sec.	0.100
✓	07-26	Torque compensation gain	IM: 0–10 (when Pr.05-33 = 0) PM: 0–5000 (when Pr.05-33 = 1 or 2)	0
✓	07-27	Slip compensation gain	0.00–10.00	0.00 (Default value is 1.00 in SVC mode)
✓	07-29	Slip deviation level	0.0–100.0% 0: No detection	0.0
✓	07-30	Over-slip deviation detection time	0.0–10.0 sec.	1.0
✓	07-31	Over-slip deviation treatment	0: Warn and continue operation 1: Fault and ramp to stop 2: Fault and coast to stop 3: No warning	0

	Pr.	Parameter Name	Setting Range	Default
✓	07-32	Motor oscillation compensation factor	0–10000 0: Disable	1000
✓	07-33	Auto-restart interval of fault	0.0–6000.0 sec.	60.0
	07-38	PMSVC voltage feed forward gain	0.00–2.00	1.00
✓	07-41	Minimum frequency for AES	0.00–40.00 Hz	10.00
	07-42	Delay time for AES	0–600 sec.	5
✓	07-43	Targeted power factor angle for AES	0.00–65.00°	40.00
✓	07-44	Maximum voltage drop for AES	0.00–70.00%	60.00
✓	07-45	AES coefficient	0–10000%	100
	07-62	dEb gain (Kp)	0–65535	8000
	07-63	dEb gain (Ki)	0–65535	150

08 High-function PID Parameters

	Pr.	Parameter Name	Setting Range	Default
✓	08-00	Terminal selection of PID feedback	0: No function 1: Negative PID feedback: by analog input (Pr.03-00–03-02) 2: Negative PID feedback: by PG card pulse input, without direction (Pr.10-02) 3: Negative PID feedback:by PG card pulse input, with direction (Pr.10-02) 4: Positive PID feedback: by analog input (Pr.03-00–03-02) 5: Positive PID feedback: by PG card pulse input, without direction (Pr.10-02) 6: Positive PID feedback: by PG card pulse input, with direction (Pr.10-02) 7: Negative PID feedback: by communication protocols 8: Positive PID feedback: by communication protocols	0
✓	08-01	Proportional gain (P)	0.0–500.0	1.0
✓	08-02	Integral time (I)	0.00–100.00 sec. 0.0: No integral	1.00
✓	08-03	Differential time (D)	0.00–1.00 sec.	0.00
✓	08-04	Upper limit of integral control	0.0–100.0%	100.0
✓	08-05	PID output command limit	0.0–110.0%	100.0
✓	08-06	PID feedback value by communication protocol	-200.00–200.00%	Read only
✓	08-07	PID delay time	0.0–35.0 sec.	0.0
✓	08-08	Feedback signal detection time	0.0–3600.0 sec.	0.0
✓	08-09	Feedback signal fault treatment	0: Warn and continue operation 1: Fault and ramp to stop 2: Fault and coast to stop 3: Warn and operate at last frequency	0
✓	08-10	Sleep level	0.00–599.00 Hz / 0.00–200.00%	0.00
✓	08-11	Wake-up level	0.00–599.00 Hz / 0.00–200.00%	0.00
✓	08-12	Sleep delay time	0.0–6000.0 sec.	0.0
✓	08-13	PID feedback signal error deviation level	1.0–50.0%	10.0
✓	08-14	PID feedback signal error deviation detection time	0.1–300.0 sec.	5.0
✓	08-16	PID compensation selection	0: Parameter setting (Pr.08-17) 1: Analog input	0

	Pr.	Parameter Name	Setting Range	Default
✓	08-17	PID compensation	-100.0–100.0%	0.0
	08-18	Sleep mode function setting	0: Refer to PID output command 1: Refer to PID feedback signal	0
✓	08-19	Wake-up integral limit	0.0–200.0%	50.0
	08-20	PID mode selection	0: Serial connection 1: Parallel connection	0
	08-21	Enable PID to change the operation direction	0: Operation direction cannot be changed 1: Operation direction can be changed	0
✓	08-22	Wake-up delay time	0.00–600.00 sec.	0.00
✓	08-23	PID control flag	bit0 = 1, PID running in reverse follows the setting for Pr.00-23. bit0 = 0, PID running in reverse refer to PID's calculated value. bit1 = 1, two decimal places for PID Kp bit1 = 0, one decimal place for PID Kp	0000h

09 Communication Parameters

	Pr.	Parameter Name	Setting Range	Default
✓	09-00	Communication address	1–254	1
✓	09-01	COM1 transmission speed	4.8–115.2 Kbps	9.6
✓	09-02	COM1 transmission fault treatment	0: Warn and continue operation 1: Fault and ramp to stop 2: Fault and coast to stop 3: No warning, no fault and continue operation	3
✓	09-03	COM1 time-out detection	0.0–100.0 sec.	0.0
✓	09-04	COM1 communication protocol	1 : 7, N, 2 (ASCII) 2 : 7, E, 1 (ASCII) 3 : 7, O, 1 (ASCII) 4 : 7, E, 2 (ASCII) 5 : 7, O, 2 (ASCII) 6 : 8, N, 1 (ASCII) 7 : 8, N, 2 (ASCII) 8 : 8, E, 1 (ASCII) 9 : 8, O, 1 (ASCII) 10 : 8, E, 2 (ASCII) 11 : 8, O, 2 (ASCII) 12: 8, N, 1 (RTU) 13: 8, N, 2 (RTU) 14: 8, E, 1 (RTU) 15: 8, O, 1 (RTU) 16: 8, E, 2 (RTU) 17: 8, O, 2 (RTU)	1
✓	09-09	Communication response delay time	0.0–200.0 ms	2.0
	09-10	Communication main frequency	0.00–599.00 Hz	60.00
✓	09-11	Block transfer 1	0000–FFFFh	0000h
✓	09-12	Block transfer 2	0000–FFFFh	0000h
✓	09-13	Block transfer 3	0000–FFFFh	0000h
✓	09-14	Block transfer 4	0000–FFFFh	0000h
✓	09-15	Block transfer 5	0000–FFFFh	0000h
✓	09-16	Block transfer 6	0000–FFFFh	0000h
✓	09-17	Block transfer 7	0000–FFFFh	0000h
✓	09-18	Block transfer 8	0000–FFFFh	0000h
✓	09-19	Block transfer 9	0000–FFFFh	0000h
✓	09-20	Block transfer 10	0000–FFFFh	0000h
✓	09-21	Block transfer 11	0000–FFFFh	0000h
✓	09-22	Block transfer 12	0000–FFFFh	0000h

	Pr.	Parameter Name	Setting Range	Default
✓	09-23	Block transfer 13	0000–FFFFh	0000h
✓	09-24	Block transfer 14	0000–FFFFh	0000h
✓	09-25	Block transfer 15	0000–FFFFh	0000h
✓	09-26	Block transfer 16	0000–FFFFh	0000h
	09-30	Communication decoding method	0: Decoding method 1 (20xx) 1: Decoding method 2 (60xx)	1
	09-31	Internal communication protocol	0: Modbus 485 -1: Internal communication slave 1 -2: Internal communication slave 2 -3: Internal communication slave 3 -4: Internal communication slave 4 -5: Internal communication slave 5 -6: Internal communication slave 6 -7: Internal communication slave 7 -8: Internal communication slave 8 -10: Internal communication master -12: Internal PLC control	0
✓	09-33	PLC command force to 0	bit0: Before PLC scans, set up PLC target frequency=0 bit1: Before PLC scans, set up PLC target torque=0 bit2: Before PLC scans, set up the speed limit of torque control mode=0	0
	09-35	PLC address	1–254	2
	09-36	CANopen slave address	0: Disable 1–127	0
	09-37	CANopen speed	0: 1 Mbps 1: 500 Kbps 2: 250 Kbps 3: 125 Kbps 4: 100 Kbps (Delta only) 5: 50 Kbps	0
	09-39	CANopen warning record	bit0: CANopen guarding time out bit1: CANopen heartbeat time out bit2: CANopen SYNC time out bit3: CANopen SDO time out bit4: CANopen SDO buffer overflow bit5: Can bus off bit6: Error protocol of CANopen	Read only

Pr.	Parameter Name	Setting Range	Default
		bit8: The setting values of CANopen indexes are fail bit9: The setting value of CANopen address is fail bit10: The checksum value of CANopen indexes is fail	
09-40	CANopen decoding method	0: Disable (Delta-defined decoding method) 1: Enable (CANopen standard DS402 protocol)	1
09-41	CANopen communication status	0: Node reset state 1: Com reset state 2: Boot up state 3: Pre-operation state 4: Operation state 5: Stop state	Read only
09-42	CANopen control status	0: Not ready for use state 1: Inhibit start state 2: Ready to switch on state 3: Switched on state 4: Enable operation state 7: Quick stop active state 13: Error reaction activation state 14: Error state	Read only
09-45	CANopen master function	0: Disable 1: Enable	0
09-46	CANopen master address	0–127	100
09-49	CANopen extension setting	bit0: Index 604F and 6050 update to the 1st acceleration / deceleration time or not. bit0=0: update to the 1st acceleration / deceleration time (default) bit0=1: do not update bit1: The verification of CANopen identification code is distinguished by power module or drive series. bit1=0: distinguished by power module bit1=1: distinguished by drive series	0002h
09-60	Communication card identification	0–12 0: No communication card 1: DeviceNet Slave 2: Profibus-DP Slave 3: CANopen Slave / Master	Read only

	Pr.	Parameter Name	Setting Range	Default
			4: Modbus-TCP Slave 5: EtherNet / IP Slave 6: EtherCAT (applied to 230V / 460V models) 12: PROFINET (applied to 230V / 460V models)	
	09-61	Firmware version of communication card	Read only	Read only
	09-62	Product code	Read only	Read only
	09-63	Error code	Read only	Read only
✓	09-70	Communication card address (for DeviceNet or PROFIBUS)	DeviceNet: 0–63 Profibus-DP: 1–125	1
✓	09-71	Communication card speed setting (for DeviceNet)	Standard DeviceNet: 0: 125 Kbps 1: 250 Kbps 2: 500 Kbps 3: 1 Mbps (Delta only) Non-standard DeviceNet: (Delta only) 0: 10 Kbps 1: 20 Kbps 2: 50 Kbps 3: 100 Kbps 4: 125 Kbps 5: 250 Kbps 6: 500 Kbps 7: 800 Kbps 8: 1 Mbps	2
✓	09-72	Additional settings for communication card speed (for DeviceNet)	0: Standard DeviceNet In this mode, the baud rate can only be 125 Kbps, 250 Kbps or 500 Kbps in standard DeviceNet speed 1: Non-standard DeviceNet In this mode, DeviceNet baud rate can be same as that for CANopen (0–8).	0
✓	09-75	Communication card IP configuration (for Modbus TCP)	0: Static IP 1: Dynamic IP (DHCP)	0
✓	09-76	Communication card IP address 1 (for Modbus TCP)	0–65535	0
✓	09-77	Communication card IP address 2 (for Modbus TCP)	0–65535	0
✓	09-78	Communication card IP address 3 (for Modbus TCP)	0–65535	0

	Pr.	Parameter Name	Setting Range	Default
✓	09-79	Communication card IP address 4 (for Modbus TCP)	0–65535	0
✓	09-80	Communication card address mask 1 (for Modbus TCP)	0–65535	0
✓	09-81	Communication card address mask 2 (for Modbus TCP)	0–65535	0
✓	09-82	Communication card address mask 3 (for Modbus TCP)	0–65535	0
✓	09-83	Communication card address mask 4 (for Modbus TCP)	0–65535	0
✓	09-84	Communication card gateway address 1 (for Modbus TCP)	0–65535	0
✓	09-85	Communication card gateway address 2 for Modbus TCP)	0–65535	0
✓	09-86	Communication card gateway address 3 (for Modbus TCP)	0–65535	0
✓	09-87	Communication card gateway address 4 (for Modbus TCP)	0–65535	0
✓	09-88	Communication card password (Low word) (for Modbus TCP)	0–99	0
✓	09-89	Communication card password (High word) (for Modbus TCP)	0–99	0
✓	09-90	Reset communication card (for Modbus TCP)	0: Disable 1: Reset to defaults	0
✓	09-91	Additional settings for the communication card (for Modbus TCP)	bit0: Enable IP filter bit1: Enable internet parameters (1 bit). When the IP address is set, this bit is enabled. After updating the parameters for the communication card, this bit changes to disabled. bit2: Enable login password (1 bit). When you enter the login password, this bit is enabled. After updating the parameters for the communication card, this bit changes to disabled.	0
	09-92	Communication card status (for Modbus TCP)	bit0: Enable password When the communication card is set with a password, this bit is enabled. When the password is cleared, this bit is disabled.	0

10 Feedback Control Parameters

	Pr.	Parameter Name	Setting Range	Default
	10-00	Encoder type selection	0: Disable 1: ABZ 2: ABZ (Delta encoder for Delta permanent magnet synchronous AC motor) 3: Resolver 4: ABZ / UVW 5: MI8 single-phase pulse input 6: Sin / Cos, absolute (A / B, C / D, R) 7: Sin / Cos, incremental (A / B, R)	0
	10-01	Encoder pulses per revolution	1–20000	600
	10-02	Encoder input type setting	0: Disable 1: A / B phase pulse inputs, run forward if A-phase leads B-phase by 90 degrees 2: A / B phase pulse inputs, run forward if B-phase leads A-phase by 90 degrees 3: A-phase is a pulse input and B-phase is a direction input (L = reverse direction, H = forward direction) 4: A-phase is a pulse input and B-phase is a direction input (L = forward direction, H = reverse direction) 5: Single-phase input	0
✓	10-03	Frequency division output setting (denominator)	1–255	1
✓	10-04	Mechanical gear at load side A1	1–65535	100
✓	10-05	Mechanical gear at motor side B1	1–65535	100
✓	10-06	Mechanical gear at load side A2	1–65535	100
✓	10-07	Mechanical gear at motor side B2	1–65535	100
✓	10-08	Treatment for encoder / speed observer feedback fault	0: Warn and continue operation 1: Fault and ramp to stop 2: Fault and coast to stop	2
✓	10-09	Detection time of encoder / speed observer feedback fault	0.0–10.0 sec. 0: Disable	1.0
✓	10-10	Encoder / speed observer stall level	0–120% 0: No function	115
✓	10-11	Detection time of encoder / speed observer stall	0.0–2.0 sec.	0.1

	Pr.	Parameter Name	Setting Range	Default
✓	10-12	Encoder / speed observer stall action	0: Warn and continue operation 1: Fault and ramp to stop 2: Fault and coast to stop	2
✓	10-13	Encoder / speed observer slip range	0–50% 0: No function	50
✓	10-14	Detection time of encoder / speed observer slip	0.0–10.0 sec.	0.5
✓	10-15	Encoder / speed observer stall and slip error action	0: Warn and continue operation 1: Fault and ramp to stop 2: Fault and coast to stop	2
	10-16	Pulse input type setting	0: Disable 1: Phases A and B are pulse inputs, forward direction if A-phase leads B-phase by 90 degrees 2: Phases A and B are pulse inputs, forward direction if B-phase leads A-phase by 90 degrees 3: Phase A is a pulse input and phase B is a direction input (L = reverse direction, H = forward direction). 4: Phase A is a pulse input and phase B is a direction input. (L = forward direction, H = reverse direction). 5: Single-phase pulse input (MI8) (applied to 230V / 460V models)	0
✓	10-17	Electrical gear A	1–65535	100
✓	10-18	Electrical gear B	1–65535	100
✓	10-21	PG2 pulse input speed command low pass filter time	0.000–65.535 sec.	0.100
✓	10-24	FOC & TQC function control	bit0: ASR control at sensorless torque (0: use PI as ASR; 1: use P as ASR) bit11: Activate DC braking when executing zero torque command (0: ON; 1: OFF) bit12: FOC Sensorless mode, cross zero means speed goes from negative to positive or reverse direction (0: determined by stator frequency; 1: determined by speed command) bit15: Direction control at open loop status (0: Switch ON direction control; 1: Switch OFF direction control)	0
✓	10-25	FOC bandwidth for speed observer	20.0–100.0 Hz	40.0
✓	10-26	FOC minimum stator frequency	0.0–10.0% fN	2.0
✓	10-27	FOC low-pass filter time constant	1–1000 ms	50

	Pr.	Parameter Name	Setting Range	Default
✓	10-28	FOC gain for excitation current rise time	33–100% Tr	100
✓	10-29	Upper limit of frequency deviation	0.00–200.00 Hz	20.00
	10-30	Resolver pole pair	1–50 pole pairs	1
✓	10-31	I/F mode, current command	0–150% rated current of the motor	40
✓	10-32	PM FOC sensorless speed estimator bandwidth (high speed)	0.00–600.00 Hz	5.00
✓	10-33	PM FOC sensorless speed estimator bandwidth (low speed)	0.00–600.00 Hz	1.00
✓	10-34	PM sensorless speed estimator low-pass filter gain	0.00–655.35	1.00
✓	10-35	AMR (Kp) gain	0.00–3.00	1.00
✓	10-36	AMR (Ki) gain	0.00–3.00	0.20
✓	10-37	PM sensorless control word	0000–FFFFh	0000h
✓	10-39	Frequency to switch from I/F mode to PM sensorless mode	0.00–599.00 Hz	20.00
		Frequency to switch from IMVF mode to IMFOCPG mode when Pr.11-00 bit11=1 in IMFOCPG mode	0.00–599.00 Hz	20.00
✓	10-40	Frequency to switch from PM sensorless mode to I/F mode	0.00–599.00 Hz	20.00
		Frequency to switch from IMFOCPG mode to IMVF mode when Pr.11-00 bit11=1 in IMFOCPG mode	30.00–599.00 Hz	40.00
✓	10-41	I/F mode, Id current low pass-filter time	0.0–6.0 sec.	0.2
✓	10-42	Initial angle detection pulse value	0.0–3.0	1.0
	10-43	PG card version	0.00–655.35	Read only
	10-47	PG1 pulse imputation scaling factor	0–3	0
✓	10-49	Zero voltage time during start-up	0.000–60.000 sec.	0.000
✓	10-50	Reverse angle limit (Electrical angle)	0.00–30.00 degree	10.00
✓	10-51	Injection frequency	0–1200 Hz	500

	Pr.	Parameter Name	Setting Range	Default
✓	10-52	Injection magnitude	0.0–200.0 V 230V models: 0.0–100.0 V 460V models: 0.0–200.0 V 575V models: 0.0–200.0 V 690V models: 0.0–200.0 V	15.0 30.0 30.0 30.0
✓	10-53	PM initial rotor position detection method	0: Disable 1: Force attracting the rotor to zero degrees 2: High frequency injection 3: Pulse injection	0
	10-54	Magnetic flux linkage estimate low-speed gain	10–1000%	100
	10-55	Magnetic flux linkage estimate high-speed gain	10~1000%	100
✓	10-56	Kp of phase-locked loop	10~1000%	100
✓	10-57	Ki of phase-locked loop	10~1000%	100
	10-58	Mutual inductance gain compensation	0.00~655.35	1.00

11 Advanced Parameters

	Pr.	Parameter Name	Setting Range	Default
	11-00	System control	bit0: Auto-tuning for ASR bit1: Inertia estimate (only for FOCPG control mode) bit2: Zero-speed servo bit6: 0 Hz linear-cross (applied to 230V / 460V models) bit7: Saving or not saving the frequency bit8: Maximum speed for point-to-point position control bit11: Switch between IMFOCPG and IMVF modes	0000h
	11-01	Per-unit of system inertia	1–65535 (256 = 1PU)	256
✓	11-02	ASR1 / ASR2 switch frequency	5.00–599.00 Hz	7.00
✓	11-03	ASR1 low-speed bandwidth	1–40 Hz (IM) / 1–100 Hz (PM)	10
✓	11-04	ASR2 high-speed bandwidth	1–40 Hz (IM) / 1–100 Hz (PM)	10
✓	11-05	Zero-speed bandwidth	1–40 Hz (IM) / 1–100 Hz (PM)	10
✓	11-06	ASR 1 gain	0–40 Hz (IM) / 1–100 Hz (PM)	10
✓	11-07	ASR 1 integral time	0.000–10.000 sec.	0.100
✓	11-08	ASR 2 gain	0–40 Hz (IM) / 0–100 Hz (PM)	10
✓	11-09	ASR 2 integral time	0.000–10.000 sec.	0.100
✓	11-10	ASR gain of zero speed	0–40 Hz (IM) / 0–100 Hz (PM)	10
✓	11-11	ASR1 integral time of zero speed	0.000–10.000 sec.	0.100
✓	11-12	Gain for ASR speed feed forward	0–150%	0
✓	11-13	PDFF gain value	0–200%	30
✓	11-14	ASR output low pass filter time	0.000–0.350 sec.	0.008
✓	11-15	Notch filter depth	0–100 dB	0
✓	11-16	Notch filter frequency	0.0–6000.0 Hz	0.0
✓	11-17	Forward motor torque limit Quadrant I	0–500%	500
✓	11-18	Forward regenerative torque limit Quadrant II	0–500%	500
✓	11-19	Reverse motor torque limit Quadrant III	0–500%	500
✓	11-20	Reverse regenerative torque limit Quadrant IV	0–500%	500
✓	11-21	Flux weakening curve for motor 1 gain value	0–200%	90
✓	11-22	Flux weakening curve for motor 2 gain value	0–200%	90

	Pr.	Parameter Name	Setting Range	Default
✓	11-23	Flux weakening area speed response	0–150%	65
✓	11-24	APR gain	0.00–40.00 Hz (IM) / 0–100.00 Hz (PM)	5.00
✓	11-25	Gain value for the APR feed forward	0–100	90
✓	11-26	APR feedforward low pass filter bandwidth	0.00–655.35 sec.	10.00
✓	11-27	Maximum torque command	0–500%	100
✓	11-28	Torque offset source	0: Disable 1: Analog signal input (Pr.03-00) 2: Pr.11-29 3: Controlled through external terminals (Pr.11-30–11-32)	0
✓	11-29	Torque offset setting	-100.0–100.0%	0.0
✓	11-30	High torque offset	-100.0–100.0%	30.0
✓	11-31	Middle torque offset	-100.0–100.0%	20.0
✓	11-32	Low torque offset	-100.0–100.0%	10.0
✓	11-33	Torque command source	0 : Digital keypad 1 : RS-485 communication (Pr.11-34) 2: Analog signal input (Pr.03-00–03-02) 3: CANopen 5: Communication card	0
✓	11-34	Torque command	-100.0–100.0% (Pr.11-27 set value = 100%)	0.0
✓	11-35	Torque command filter time	0.000–1.000 sec.	0.000
	11-36	Speed limit selection	0: Set by Pr.11-37 (Forward speed limit) and Pr.11-38 (reverse speed limit) 1: Set by Pr.00-20 (Master frequency source command) and Pr.11-37, Pr.11-38 2: Set by Pr.00-20 (Master frequency source command).	0
✓	11-37	Forward speed limit (torque mode)	0–120%	10
✓	11-38	Reverse speed limit (torque mode)	0–120%	10
	11-39	Zero torque command mode selection	0: Torque mode 1: Speed mode	0
✓	11-40	~~Point-to-point~~ Position control command source	0: Input from internal register 1: Input from external pulse 2: RS-485 3: CANopen 5: Communication card	0
✓	11-42	System control flag	0000–FFFFh	0000h

	Pr.	Parameter Name	Setting Range	Default
✓	11-43	Position control maximum frequency	0.00–599.00 Hz	60.00
✓	11-44	Position control acceleration time	0.00–655.35 sec.	1.00
✓	11-45	Position control deceleration time	0.00–655.35 sec.	1.00
	11-46	Torque output filter time (applied to 230V / 460V models)	0.000–65.535 sec.	0.050
	11-47	Notch filter bandwidth	0–1000 Hz	0
	11-50	APR S-curve time	0.000–1.000	0.300
	11-51	Maximum allowable position error	0–65535	1000
	11-52	Allowable position error range	0–65535	10
	11-53	Allowable position error cumulative time	0.000–65.535 sec.	0.500
	11-54	Treatment to the large position control error	0: Warn and continue operation (display oPE on keypad) 1: Fault and ramp to stop (display oPEE on keypad) 2: Fault and coast to stop (display oPEE on keypad)	0
✓	11-56	Software positive limit (revolution)	-30000–30000 revolutions	30000
✓	11-57	Software positive limit (pulse)	Refer to Pr.10-01 setting	0
✓	11-58	Software negative limit (revolution)	-30000–30000 revolutions	-30000
✓	11-59	Software negative limit (pulse)	Refer to Pr.10-01 setting	0
	11-60	Position control bit	bit0: Enable position memory function bit1: The pulse per revolution at load side counts by ppr bit2: Enable software limit switch function bit3: Enable hardware limit switch function	00Ah
	11-62	Encoder at load side ppr number (high byte)	0–65535	0
	11-63	Encoder at load side ppr number (low byte)	0–65535	2400
	11-65	Single-point positioning position (high byte)	0–ppr number at load side	0
	11-66	Single-point positioning position (low byte)	0–ppr number at load side	0
	11-68	Homing method	0000h–0128h	0008h
	11-69	Homing control time out	0.0–6000.0 sec.	60.0
	11-70	Homing control 1st step speed	0.00–599.00 Hz	8.00
	11-71	Homing control 2nd step speed	0.00–599.00 Hz	2.00

Pr.	Parameter Name	Setting Range	Default
11-72	Homing control acceleration / deceleration time (0–Homing control 1st step speed)	0.00–600.00 sec.	10.00
11-73	Homing control offset (revolution)	-30000–30000 revolutions	0
11-74	Homing control offset (pulse)	Refer to Pr.10-01 setting	0
11-75	Position record (revolution)	-30000–30000 revolutions	0
11-76	Position record (pulse)	Refer to Pr.10-01 setting	0
11-78	HALT revived selection	0: Stopped 1: Continue according to the previous position command	0

13 Application Parameters by Industry (applied to 230V / 460V models)

Pr.	Parameter Name	Setting Range	Default
13-00	Industry-specific parameter application	0: Disabled 1: User-defined parameter 2: Compressor (IM) 3: Fan 4: Pump 10: Air Handling Unit, AHU	0

14 Extension Card Parameter

	Pr.	Parameter Name	Setting Range	Default
✓	14-00	Extension card Input terminal selection (AI10)	0: Disable 1: Frequency command 2: Torque command (torque limit under speed mode) 3: Torque compensation command 4: PID target value 5: PID feedback signal 6: Thermistor (PTC / KTY-84) input value 7: Positive torque limit 8: Negative torque limit 9: Regenerative torque limit 10: Positive / negative torque limit 11: PT100 thermistor input value 13: PID compensation value	0
✓	14-01	Extension card Input terminal selection (AI11)		0
✓	14-08	Analog input filter time (AI10)	0.00–20.00 sec.	0.01
✓	14-09	Analog input filter time (AI11)	0.00–20.00 sec.	0.01
	14-10	Analog input 4–20 mA signal loss selection (AI10)	0: Disable 1: Continue operation at the last frequency 2: Decelerate to 0 Hz 3: Stop immediately and display ACE	0
	14-11	Analog input 4–20 mA signal loss selection (AI11)		0
✓	14-12	Extension card output terminal selection (AO10)	0: Output frequency (Hz) 1: Frequency command (Hz) 2: Motor speed (Hz) 3: Output current (rms) 4: Output voltage 5: DC bus voltage 6: Power factor 7: Power 8: Torque 9: AVI 10: ACI 11: AUI 12: Iq current command 13: Iq feedback value 14: Id current command 15: Id feedback value 18: Torque command 19: PG2 frequency command 20: CANopen analog output	0
✓	14-13	Extension card output terminal selection (AO11)		0

	Pr.	Parameter Name	Setting Range	Default
			21: RS-485 analog output 22: Communication card analog output 23: Constant voltage output 25: CANopen and RS-485 analog output	
✓	14-14	Analog output 1 gain output (AO10)	0.0–500.0%	100.0
✓	14-15	Analog output 1 gain output (AO11)	0.0–500.0%	100.0
✓	14-16	Analog output 1 in 0–10 V REV direction (AO10)	0: Absolute value of output voltage 1: Reverse output 0V; Forward output 0–10V 2: Reverse output 5–0V; Forward output 5–10V	0
✓	14-17	Analog output 1 in 0–10 V REV direction (AO11)		0
✓	14-18	Extension card input selection (AI10)	0: 0–10 V (AVI10) 1: 0–20 mA (ACI10) 2: 4–20 mA (ACI10)	0
✓	14-19	Extension card input selection (AI11)	0: 0–10 V (AVI11) 1: 0–20 mA (ACI11) 2: 4–20 mA (ACI11)	0
	14-20	AO10 DC output setting level	0.00–100.00%	0.00
	14-21	AO11 DC output setting level	0.00–100.00%	0.00
✓	14-22	AO10 filter output time	0.00–20.00 sec.	0.01
✓	14-23	AO11 filter output time	0.00–20.00 sec.	0.01
✓	14-36	AO10 output selection	0: 0–10 V 1: 0–20 mA 2: 4–20 mA	0
✓	14-37	AO11 output selection		0

Chapter 12 Descriptions of Parameter Settings

12-1 Descriptions of Parameter Settings

00 Drive Parameters

✓ You can set this parameter during operation.

00-00 AC Motor Drive Identity Code

Default: Read only

Settings Read Only

00-01 AC Motor Drive Rated Current Display

Default: Read only

Settings Read Only

📖 Pr.00-00 displays the AC motor drive identity code. Use the following specification table to check if Pr.00-01 setting is the rated current of the AC motor drive. Pr.00-01 corresponds to the identity code of the AC motor drive (Pr.00-00).

📖 The default is the rated current for heavy duty. Set Pr.00-16 = 1 to display the rated current for super heavy duty.

230V Models										
Frame	A				B			C		
Power (kW)	0.75	1.5	2.2	3.7	5.5	7.5	11	15	18.5	22
Power (HP)	1.0	2.0	3.0	5.0	7.5	10	15	20	25	30
Identity code	4	6	8	10	12	14	16	18	20	22
Rated current for heavy duty (A)	5	8	11	17	25	33	49	65	75	90
Rated current for super heavy duty (A)	3	5	8	11	17	25	33	49	65	75

Frame	D		E			F
Power (kW)	30	37	45	55	75	90
Power (HP)	40	50	60	75	100	125
Identity code	24	26	28	30	32	34
Rated current for heavy duty (A)	120	146	180	215	255	346
Rated current for super heavy duty (A)	90	120	146	180	215	255

460V Models												
Frame	A						B			C		
Power (kW)	0.75	1.5	2.2	3.7	4.0	5.5	7.5	11	15	18.5	22	30
Power (HP)	1	2	3	5	5	7.5	10	15	20	25	30	40
Identity code	5	7	9	11	93	13	15	17	19	21	23	25
Rated current for heavy duty (A)	3	4	6	9	10.5	12	18	24	32	38	45	60
Rated current for super heavy duty (A)	1.7	3	4	6	9	10.5	12	18	24	32	38	45

Frame	D0		D		E		F		G			
Power (kW)	37	45	55	75	90	110	132	160	185	200	200	250
Power (HP)	50	60	75	100	125	150	175	215	250	270	270	240
Identity code	27	29	31	33	35	37	39	41	43	486	486	487
Rated current for heavy duty 481(A)	73	91	110	150	180	220	260	310	370	395	395	481
Rated current for super heavy duty (A)	60	73	91	110	150	180	220	260	310	310	310	395

Frame	H						
Power (kW)	280	315	355	400	450	500	560
Power (HP)	375	425	475	536	600	650	750
Identity code	47	49	51	53	55	57	59
Rated current for heavy duty (A)	550	616	683	770	866	930	1094
Rated current for super heavy duty (A)	460	550	616	683	683	866	930

575V Models							
Frame	A			B			
Power (kW)	1.5	2.2	3.7	5.5	7.5	11	15
Power (HP)	2	3	5	7.5	10	15	20
Identity code	505	506	507	508	509	510	511
Rated current for heavy duty (A)	2.1	3	4.6	6.9	8.3	13	16.8
Rated current for normal duty (A)	2.5	3.6	5.5	8.2	10	15.5	20
Rated current for light duty (A)	3	4.3	6.7	9.9	12.1	18.7	24.2

690V Models												
Frame	C				D		E				F	
Power (kW)	18.5	22	30	37	45	55	75	90	110	132	160	200
Power (HP)	25	30	40	50	60	75	100	125	150	175	215	270
Identity code	612	613	614	615	616	617	618	619	620	621	622	686
Rated current for heavy duty (A)	14	20	24	30	36	45	54	67	86	104	125	150
Rated current for normal duty (A)	20	24	30	36	45	54	67	86	104	125	150	180
Rated current for light duty (A)	24	30	36	45	54	67	86	104	125	150	180	220

Frame	G		H			
Power (kW)	250	315	400	450	560	630
Power (HP)	335	425	530	600	750	850
Identity code	687	626	628	629	631	632
Rated current for heavy duty (A)	180	220	290	310	420	675
Rated current for normal duty (A)	220	290	350	385	465	675
Rated current for light duty (A)	290	350	430	465	590	675

00-02 Parameter Reset

Default: 0

Settings 0: No Function

1: Write protection for parameters

5: Return kWh displays to 0

6: Reset PLC (including CANopen Master Index)

7: Reset CANopen Slave Index

9: Reset all parameters to defaults (base frequency is 50 Hz)

10: Reset all parameters to defaults (base frequency is 60 Hz)

1: All parameters are read only except Pr.00-02, Pr.00-07 and Pr.00-08. Set Pr.00-02 to 0 before changing other parameter settings.

- 5: You can return the kWh displayed value to 0 even during drive operation. For example, you can set Pr.05-26–Pr.05-30 to 0.
- 6: Clear the internal PLC program (includes the related settings of PLC internal CANopen master)
- 7: Reset the related settings of CANopen slave.
- 9 or 10: Reset all parameters to defaults. If you have set a password (Pr.00-08), unlock the password (Pr.00-07) to clear the password you have set before you reset all parameters.
- For settings of 6, 7, 9, 10, you must reboot the motor drive after you finish the setting.

00-03 Start-up Display

Default: 0

Settings
0: F (Frequency command)
1: H (Output frequency)
2: U (User defined, see Pr.00-04)
3: A (Output current)

- Determines the start-up display page after power is applied to the drive. The user-defined contents display according to the Pr.00-04 settings.

00-04 Content of Multi-function Display (User-defined)

Default: 3

Settings
0: Display output current (A) (Unit: Amp)
1: Display counter value (c) (Unit: CNT)
2: Display the motor's actual output frequency (H.) (Unit: Hz)
3: Display the drive's DC bus voltage (v) (Unit: V_{DC})
4: Display the drive's output voltage (E) (Unit: V_{AC})
5: Display the drive's output power angle (n) (Unit: deg)
6: Display the drive's output power (P) (Unit: kW)
7: Display the motor speed rpm (r) (Unit: rpm)
8: Display the drive's estimated output torque, motor's rated torque is 100% (t) (Unit: %)
9: Display PG feedback (G) (refer to Pr.10-00 and Pr.10-01) (Unit: PLS)
10: Display PID feedback (b) (Unit: %)
11: Display AVI analog input terminal signal (1.) (Unit: %)
12: Display ACI analog input terminal signal (2.) (Unit: %)
13: Display AUI analog input terminal signal (3.) (Unit: %)
14: Display the drive's IGBT temperature (i.) (Unit: °C)
15: Display the drive's capacitance temperature (c.) (Unit: °C)
16: The digital input status (ON / OFF) (i)
17: The digital output status (ON / OFF) (o)
18: Display multi-step speed (S)
19: The corresponding CPU digital input pin status (d)
20: The corresponding CPU digital output pin status (0.)
21: Actual motor position (PG1 of PG card) (P.) The maximum value is 32bits display

22: Pulse input frequency (PG2 of PG card) (S.)
23: Pulse input position (PG2 of PG card) (q.) The maximum value is 32bits display
24: Position command tracing error (E.)
25: Overload counting (0.00–100.00%) (o.) (Unit: %)
26: Ground fault GFF (G.) (Unit: %)
27: DC bus voltage ripple (r.) (Unit: V_{DC})
28: Display PLC register D1043 data (C)
29: Display PM pole section (EMC-PG01U application) (4.)
30: Display the output of User-defined (U)
31: Display Pr.00-05 user Gain (K)
32: Number of actual motor revolution during operation (PG card plug in and Z phase signal input) (Z.)
34: Operation speed of fan (F.) (Unit: %)
35: Control Mode display:
0= Speed control mode (SPD)
1= Torque control mode (TQR) (t.)
36: Present operating carrier frequency of the drive (J.) (Unit: Hz)
38: Display the drive status (6.)
39: Display the drive's estimated output torque, positive and negative, using Nt-m as unit (t 0.0: positive torque; -0.0: negative torque) (C.)
40: Torque command (L.) (Unit: %)
41: kWh display (J) (Unit: kWh)
42: PID target value (h.) (Unit: %)
43: PID compensation (o.) (Unit: %)
44: PID output frequency (b.) (Unit: Hz)
45: Hardware ID
49: Motor temperature (KTY84-130 only)
51: PMSVC torque offset
52: AI10%
53: AI11%
54: PMFOC Ke estimation value
68: STO version (d)
69: STO checksum-high word (d)
70: STO checksum-low word (d)

Explanation 1

- When Pr.10-01 is set to 1000 and Pr.10-02 is set to 1, 2, the displayed range for PG feedback is between 0–4000.
- When Pr.10-01 is set to 1000 and Pr.10-02 is set to 3, 4, 5, the displayed range for PG feedback is between 0–1000.
- Home position: If it has Z phase, Z phase will be regarded as home position. Otherwise, home position will be the encoder start up position.

Explanation 2

- It can also display negative values when setting analog input bias (Pr.03-03–03-10).
  Example: Assume that AVI input voltage is 0 V, Pr.03-03 is 10.0% and Pr.03-07 is 4 (Bias serves as the center).

Explanation 3

Example: If REV, MI1 and MI6 are ON, the following table shows the status of the terminals.

Normally opened contact (N.O.), 0: OFF, 1: ON

Terminal	MI15	MI14	MI13	MI12	MI11	MI10	MI8	MI7	MI6	MI5	MI4	MI3	MI2	MI1	REV	FWD
Status	0	0	0	0	0	0	0	0	1	0	0	0	0	1	1	0

NOTE MI10–MI15 are the terminals for extension cards (Pr.02-26–02-31).

- The value is 0000 0000 1000 0110 in binary and 0086H in HEX. When Pr.00-04 is set to 16 or 19, the u page on the keypad displays 0086H.
- The setting value 16 is ON / OFF status of digital input according to Pr.02-12 setting, and the setting value 19 is the corresponding CPU pin ON / OFF status of the digital input.
- The FWD / REV action and MI1 (which is set to three-wire) are not affected by Pr.02-12.
- You can set 16 to monitor the digital input ON / OFF status, and then set 19 to check if the circuit is normal.

Explanation 4

Assume that RY1: Pr.02-13 is set to 9 (Drive is ready). After the drive is powered on, if there is no other abnormal status, the contact is ON. The display status is shown below.

Normally opened contact (N.O.)

Terminal	MO20	MO19	MO18	MO17	MO16	MO15	MO14	MO13	MO12	MO11	MO10	MO2	MO1	Reserved	RY2	RY1
Status	0	0	0	0	0	0	0	0	0	0	0	0	0	0	0	1

- If Pr.00-04 is set to 17 or 20, it displays in hexadecimal “0001h” with LED u page is ON in the keypad.
- The setting value 17 is ON / OFF status of digital output according to Pr.02-18 setting, and the setting value 19 is the corresponding CPU pin ON / OFF status of the digital output.
- You can set 17 to monitor the digital output ON / OFF status, and then set 20 to check if the circuit is normal.

Explanation 5

Setting value 8: 100% means the motor rated torque.

Motor rated torque = (Motor rated power x 60 / 2π) / Motor rated speed

Explanation 6

Setting value 25: when displayed value reaches 100.00%, the drive shows “oL” as an overload warning.

Explanation 7

Setting value 38

bit0: The drive is running forward.
bit1: The drive is running backward.
bit2: The drive is ready.
bit3: Errors occurred on the drive.
bit4: The drive is running.
bit5: Warnings occurred on the drive.

00-05 Coefficient Gain in Actual Output Frequency

Default: 0

Settings 0.00–160.00

Sets the user-defined unit coefficient gain. Set Pr.00-04 = 31 to display the calculation result on the screen (calculation = output frequency × Pr.00-05).

00-06 Firmware Version

Default: Read only

Settings Read only

00-07 Parameter Protection Password Input

Default: 0

Settings 0–65535

Display 0–4 (the number of password attempts allowed)

This parameter allows you to enter your password (which is set in Pr.00-08) to unlock the parameter protection and to make changes to the parameter.

To avoid problems in the future, be sure to write down the password after you set this parameter.

Pr.00-07 and Pr.00-08 are used to prevent personnel from setting other parameters by accident.

If you forget the password, clear the password setting by input 9999 and press the ENTER key, then enter 9999 again and press ENTER within 10 seconds. After decoding, all the settings return to default.

When setting is under password protection, all the parameters read 0, except Pr.00-08.

00-08 Parameter Protection Password Setting

Default: 0

Settings 0–65535

0: No password protection or password entered correctly (Pr.00-07)

1: Password has been set

This parameter is for setting the password protection. Password can be set directly the first time. After you set the password, the value of Pr.00-08 is 1, which means password protection is activated. At this time, if you want to change any of the parameter settings, you must enter the correct password in Pr.00-07 to deactivate the password temporarily, and this would make Pr.00-08 become 0. After you finish setting the parameters, reboot the motor drive and the password is activated again.

Entering the correct password in Pr.00-07 only temporarily deactivates the password. To permanently deactivate password protection, set Pr.00-08 to 0 manually. Otherwise, password protection is always reactivated after you reboot the motor drive.

The keypad copy function works normally only when the password protection is deactivated (temporarily or permanently), and password set in Pr.00-08 cannot be copied to the keypad. So when copying parameters from the keypad to the motor drive, set the password manually again in the motor drive to activate password protection.

Password Decode Flow Chart

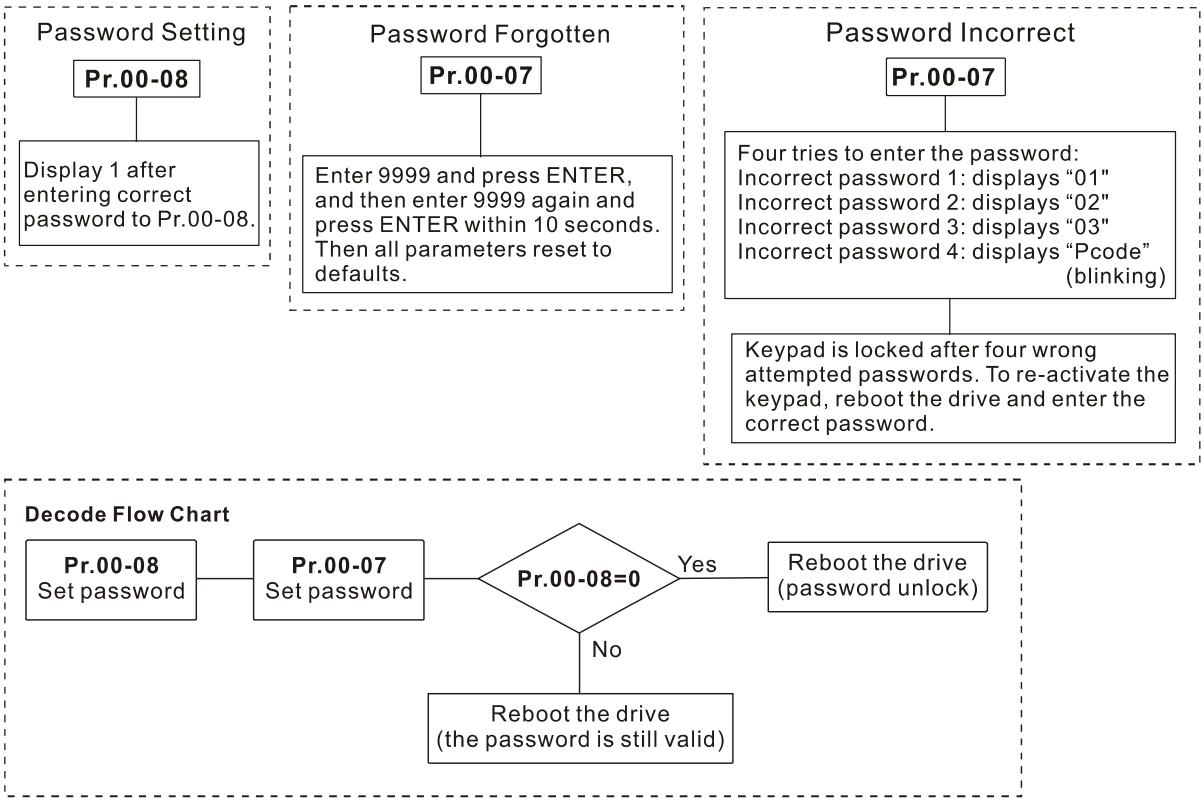

00-10 Control Mode

Default: 0

Settings 0: Speed control mode
1: Position control mode
2: Torque mode

- Determines the control mode of the AC motor drive.
- Synchronous reluctance motor only supports speed control mode and torque mode.
- The position control function is currently only available for IMFOCPG and PMFOCPG control modes.

IMFOCPG position control diagram (Pr.00-10 = 1, and Pr.00-11 = 3):

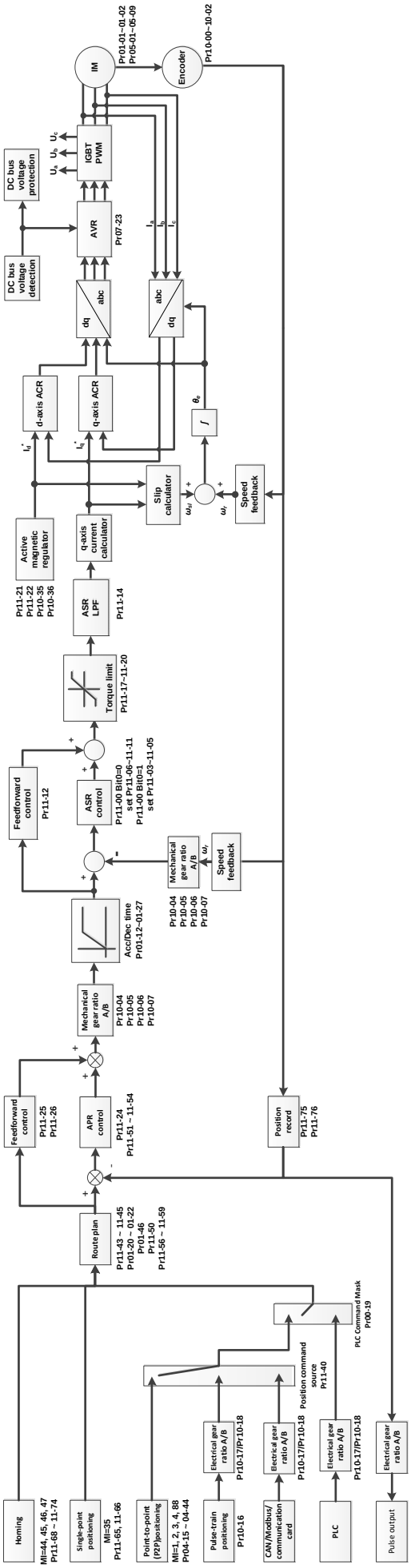

PMFOCPG position control diagram (Pr.00-10 = 1, and Pr.00-11 = 4):

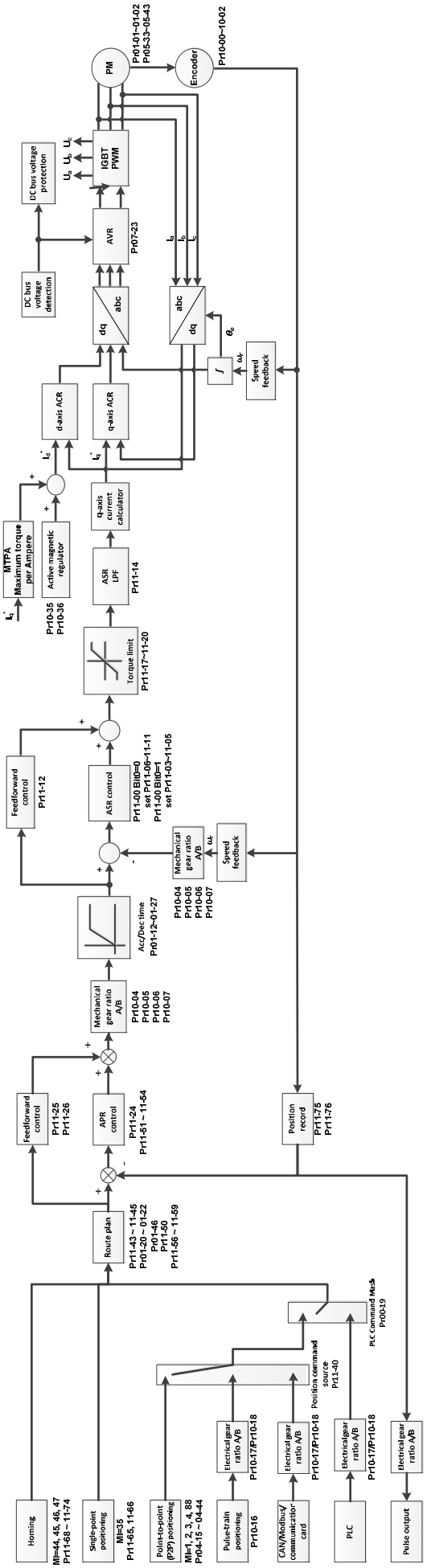

Position control diagram:

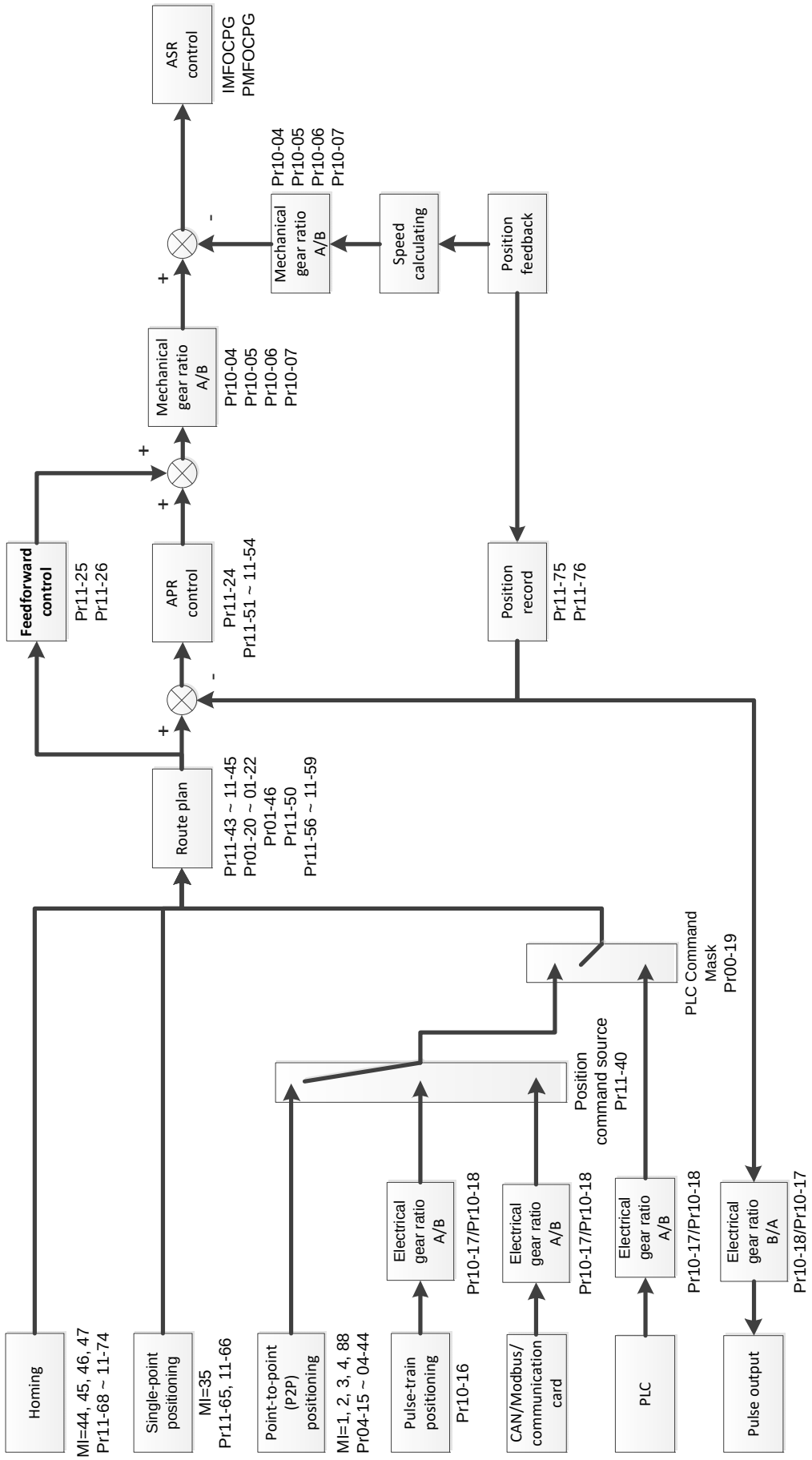

Single-point positioning control diagram:

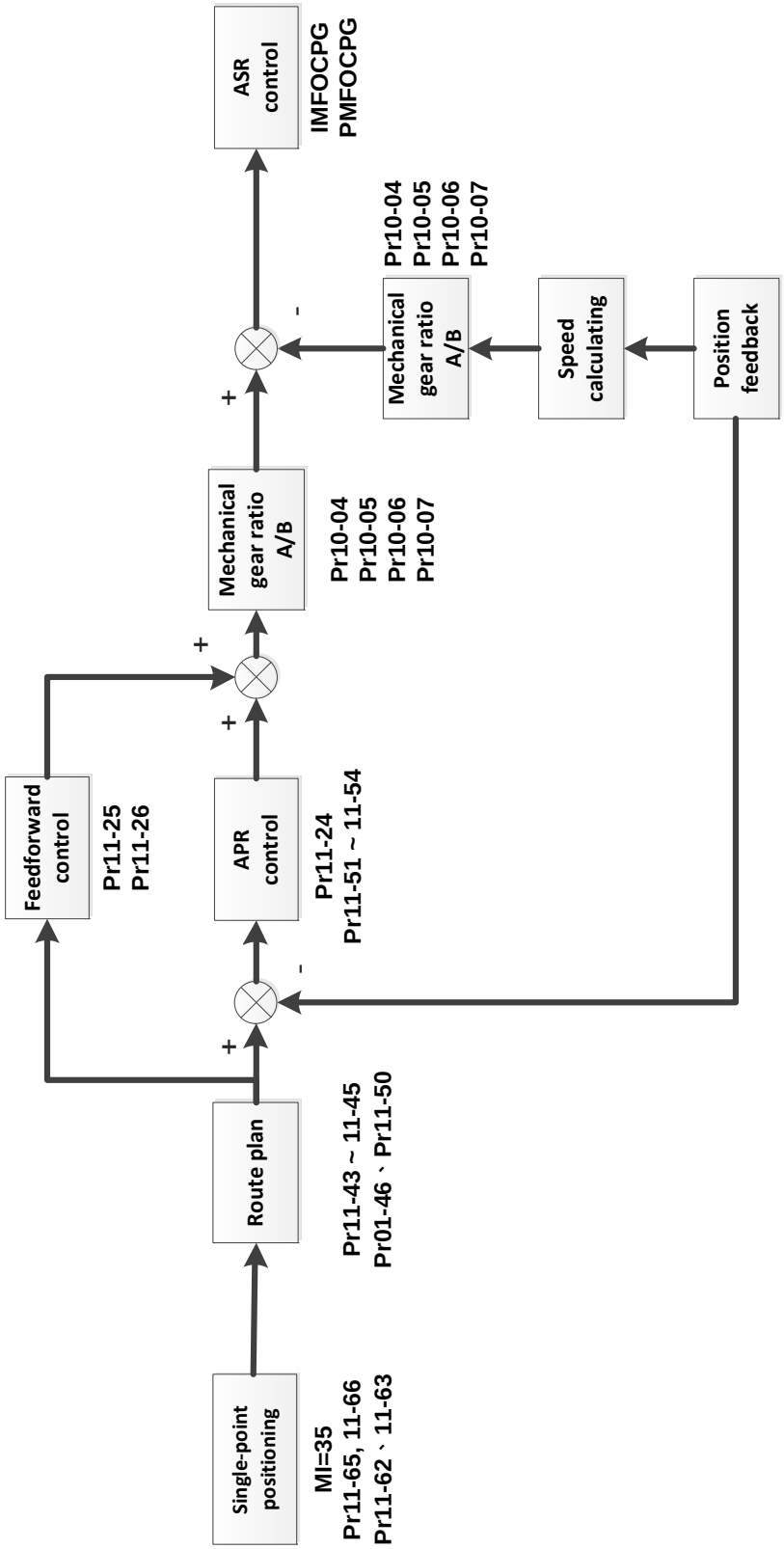

The single-point positioning:

- The single-point positioning function is to position the motor at the Z-phase signal of the encoder (Pr.11-65 single-point positioning position high byte = 0; Pr.11-66 single-point positioning position low byte = 0), or at a specific position that is equivalent to the Z-phase signal (Pr.11-65 single-point positioning position high byte; Pr.11-66 single-point positioning position low byte).
- When single-point positioning function is enabled (MIx = 35), the route planning is according to Pr.11-65 (single-point positioning position high byte) and Pr.11-66 (single-point positioning

position low byte) position settings, Pr.11-43 (maximum frequency for position control), Pr.11-44 (acceleration time for position control), and Pr.11-45 (deceleration time for position control), then the planned position command is provided to the APR position controller.

- When using the single-point positioning function, consider the mechanical gear ratio and encoder installation positions (use semi-closed loop control method when the encoder is installed at the motor side or load side; use fully-closed loop control method when the encoder is installed at the motor side and the Z-phase signal comes from the load side)
- In the process of homing, single-point positioning function and point-to-point (hereafter “P2P”) position command input are not available; in the process of single-point positioning, homing control function and P2P position command input are not available.

Pulse-train positioning control diagram:

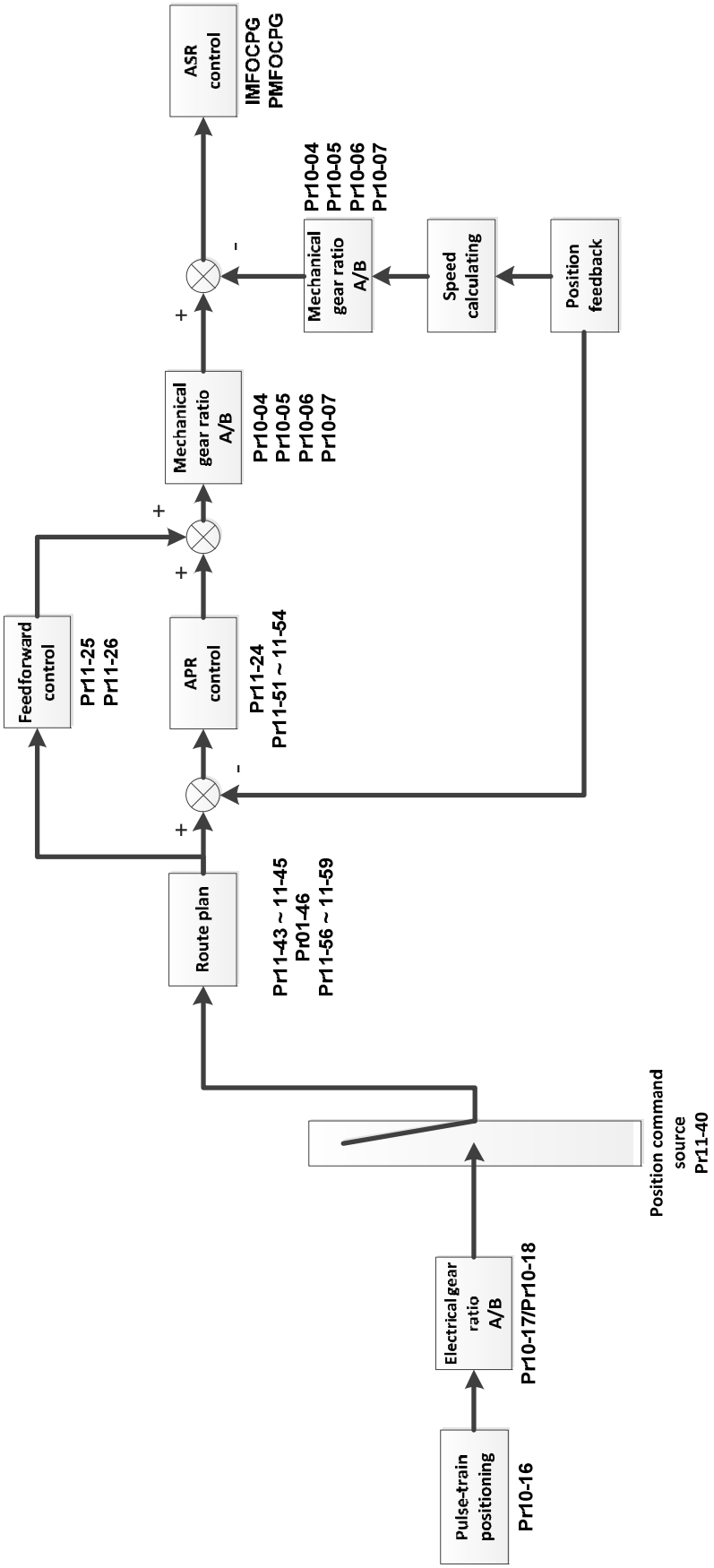

Pulse-train positioning position control:

- The pulse-train positioning position control uses the pulse-train command as the position command for position control.
- The pulse-train command can be either an open-collector signal or a differential signal.

- Choose either of the following three methods to enable the pulse-train positioning position control function:
  1. Set the control mode to position control mode (Pr.00-10= 1), set the external pulse-train as the position control command source (Pr.11-40 = 1), or set and activate the multi-function input terminal to position command source switch (MIx = 90).
  2. Set and activate the multi-function input terminal to speed/position mode switch (MIx = 89), set the external pulse-train as the position control command source (Pr.11-40 = 1), or set and activate the multi-function input terminal to position command source switch (MIx = 90).
  3. Set and activate the multi-function input terminal to enable pulse-train command position control (MIx = 37).
- When the encoder feedback position has reached the reference position command, the motor remains at the current reference position command.
- The motor runs according to the accumulated number of pulses given by the controller during the drive's operation. The motor is invalid and cannot be driven by the external pulse-trains given by the controller when the drive stops.
- The external pulse-trains given by the controller calculate the electrical gear ratio (B / A) before performing the position control.
- Only four types of pulse-train command inputs are available:
  1. Pr.10-16 = 1: Phase A and B are pulse-train inputs, running forward if the A-phase leads the B-phase by 90 degrees.
  2. Pr.10-16 = 2: Phase A and B are pulse-train inputs, running forward if the B-phase leads the A-phase by 90 degrees
  3. Pr.10-16 = 3: Phase A is a pulse-train input and phase B is a direction input (L = reverse direction, H = forward direction)
  4. Pr.10-16 = 4: Phase A is a pulse-train input and phase B is a direction input (L = forward direction, H = reverse direction)

Homing position control diagram:

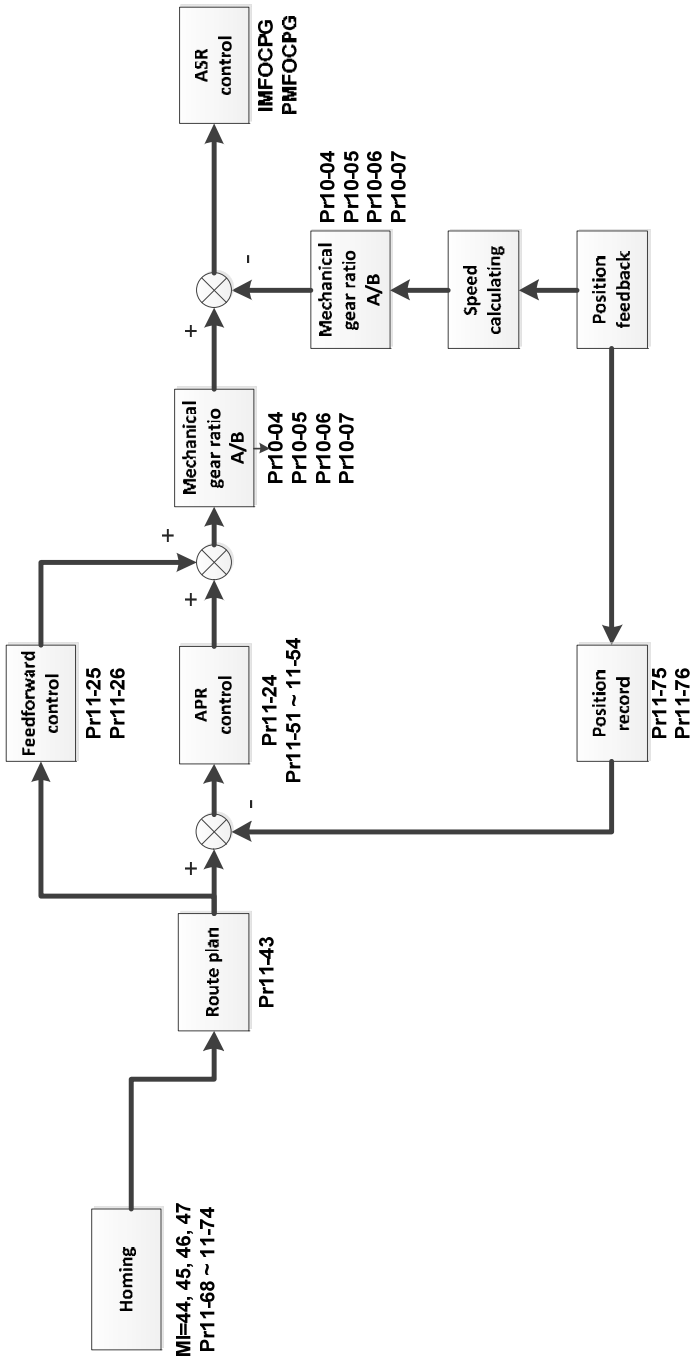

Homing position control:

- The homing position control function determines the reference point of the motor moving coordinate system. If you use the incremental encoder, the coordinate system origin is the position where the drive is powered on. Use the homing positioning function to ensure that whenever you perform a task the reference point is in the same position.
- When you set and activate the multi-function input terminal to enable the homing function (MIx = 47) under the position control mode, the homing position control function is enabled.
- In the process of homing positioning, single-point positioning function and multi-step speed command input are not available. Only when the homing positioning or single-point positioning process is finished, the multi-step speed command is available.
- Once the homing is finished after setting the multi-function output terminal to homing completed (MOx = 49), this terminal remains ON.

Point-to-point positioning control diagram:

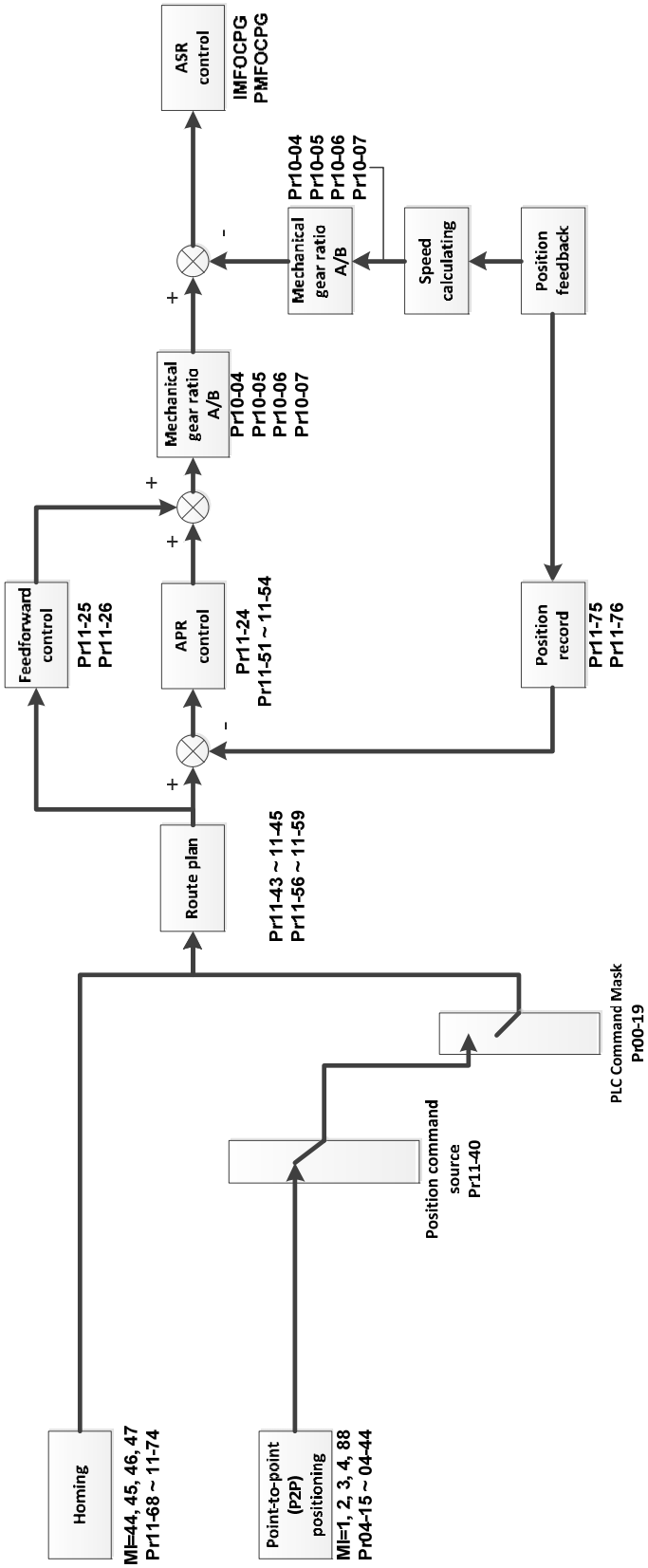

Point-to-point (P2P) positioning position control:

📖 The P2P position control is a positioning function that controls the motor operation from one position to another. This function controls the positioning position according to the encoder feedback signals, and determines the positioning position through the multi-function input terminals. A maximum of four multi-function input terminals can be used at the same time to switch between 15 positions.

- When the encoder feedback position has reached the reference position command, the motor remains at the current reference position command.
- The P2P positioning position control function is an absolute position control, and its reference point is the origin obtained after homing. Thus homing must be done before performing the P2P positioning position control function.
- The speed of the P2P positioning position control function is based on Pr.11-43 (Maximum Frequency for Position Control); the acceleration and deceleration time is based on Pr.11-44 and Pr.11-45.
- When you set and activate the multi-function input terminal to P2P position command confirmation (MIx = 88), the motor moves to a certain position (take position 1 as an example). At this time, switch the P2P position to 2 and activate MIx = 88 terminal again. Then, the motor does not move to position 1 but moves to position 2.

00-11 Speed Control Mode

Default: 0

Settings
0: IMVF (IM V/F control)
1: IMVFPG (IM V/F control+ Encoder)
2: IM / PM SVC (IM / PM space vector control)
3: IMFOCPG (IM FOC + Encoder)
4: PMFOCPG (PM FOC + Encoder)
5: IMFOC Sensorless (IM FOC sensorless)
6: PM Sensorless (PM FOC sensorless)
7: IPM Sensorless (Interior PM FOC sensorless)
8: SynRM Sensorless Control (SynRM FOC sensorless)

- Determines the control method of the AC motor drive:
  - 0: IM V/F control, you can set the proportion of V/F as required and control multiple motors simultaneously.
  - 1: IM V/F control + Encoder, you can use optional PG card with encoder for the closed-loop speed control.
  - 2: IM/PM space vector control, gets the optimal control by auto-tuning the motor parameters.
  - 3: IM FOC + encoder, not only can increase torque, but also can increase the accuracy of the speed control (1:1000).
  - 4: PM FOC + Encoder, not only can increase torque, but also can increase the accuracy of the speed control (1:1000).
  - 5: IM FOC sensorless, IM field oriented sensorless vector control
  - 6: PM FOC sensorless, PM field oriented sensorless vector control
  - 7: Interior PM FOC sensorless, Interior PM field oriented sensorless vector control
- There are more detailed explanation of motor adjustment procedure in section 12-2

📖 When Pr.00-10 = 0, and you set Pr.00-11 to 0, the V/F control diagram is as follows.

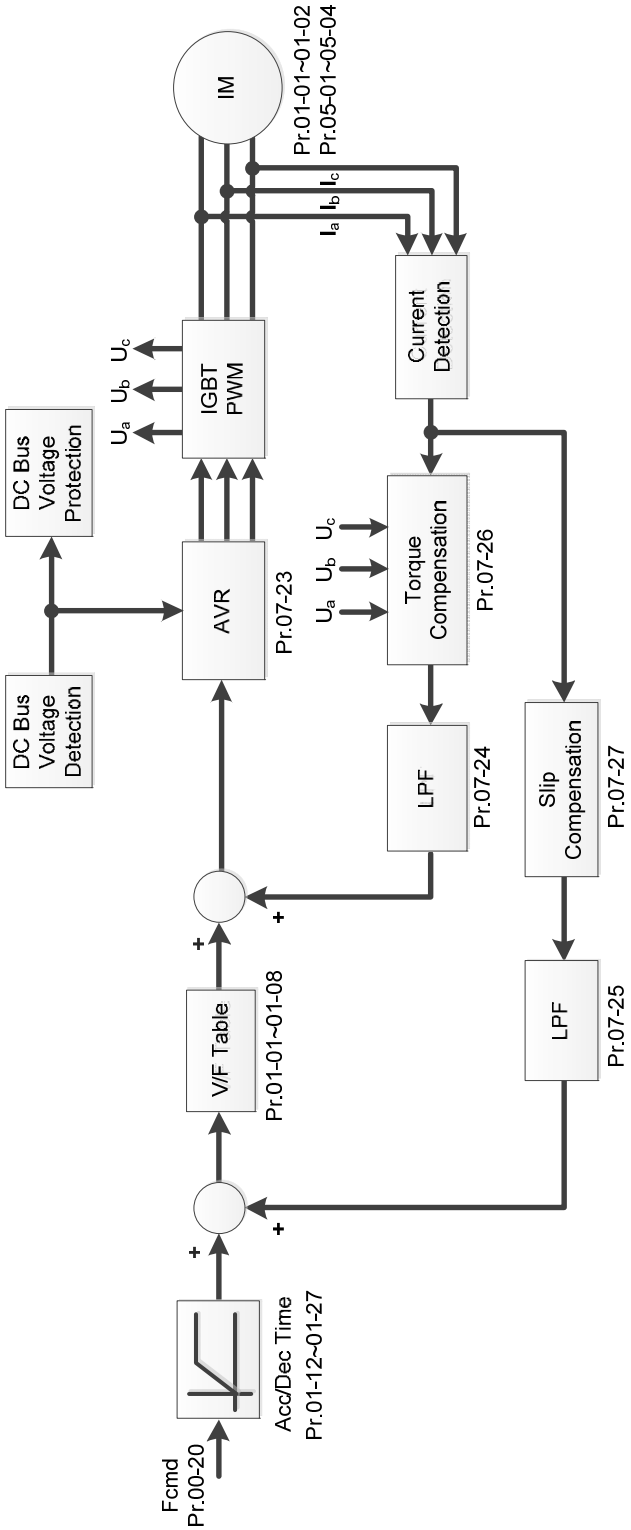

When Pr.00-10 = 0, and you set Pr.00-11 to 1, the V/F control + encoder diagram is as follows.

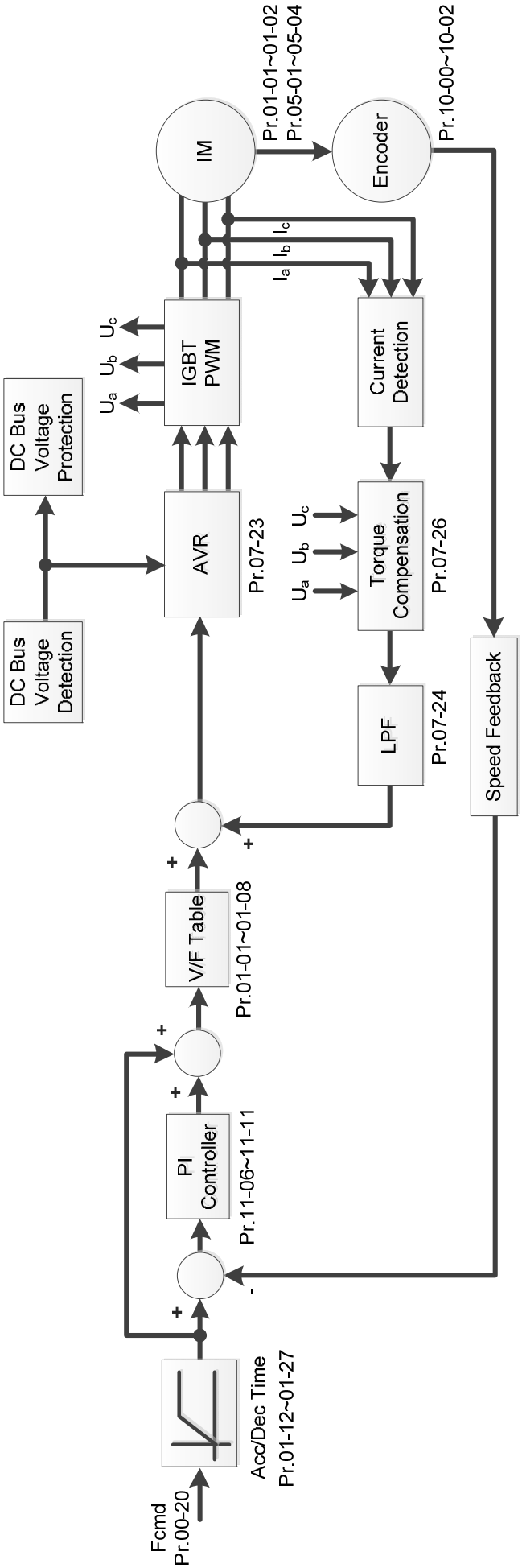

When Pr.00-10 = 0, and you set Pr.00-11 to 2, the space vector control diagram is as follows:
IM Space Vector Control (IMSVC):

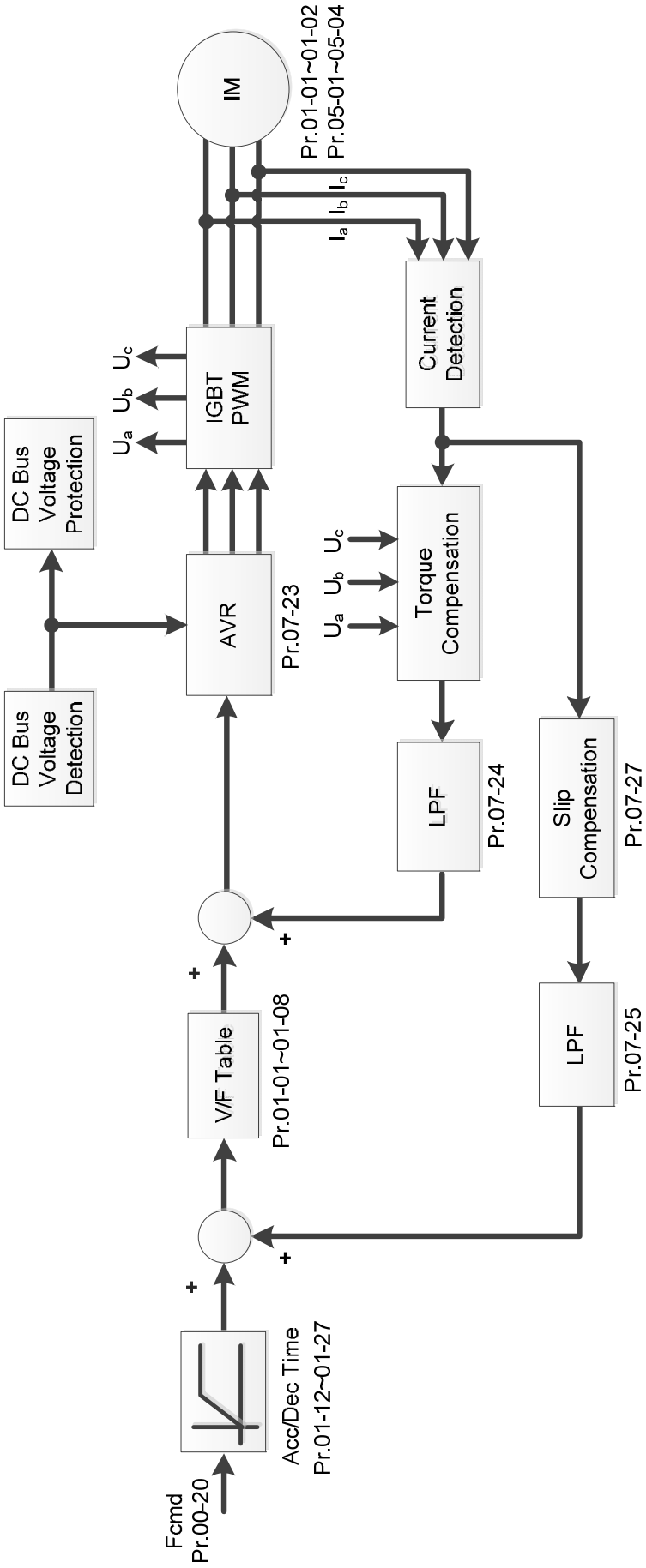

PM Space Vector Control (PMSVC):

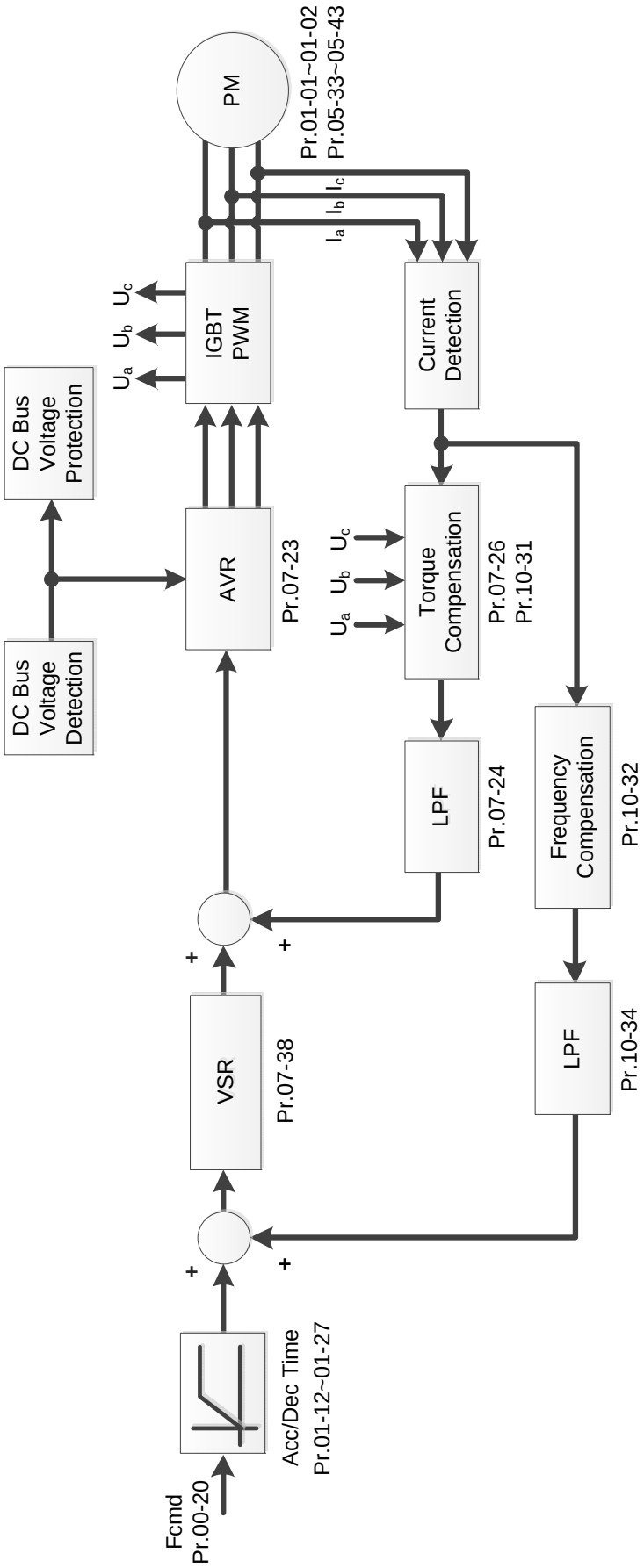

📖 When Pr.00-10 = 0, and you set Pr.00-11 to 3, the IM FOCPG control diagram is as follows:

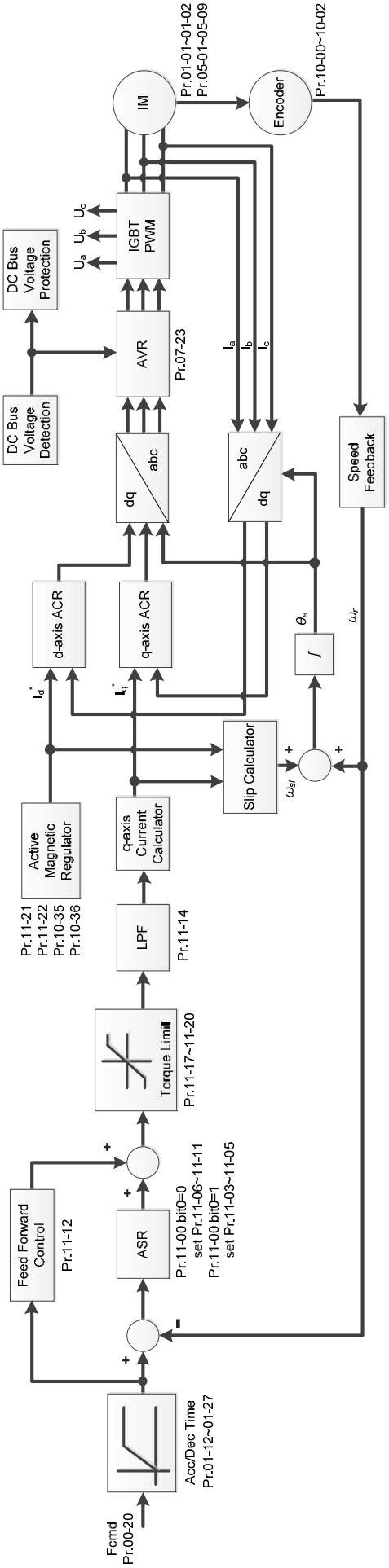

When Pr.00-10 = 0, and you set Pr.00-11 to 4, the PM FOCPG control diagram is as follows:

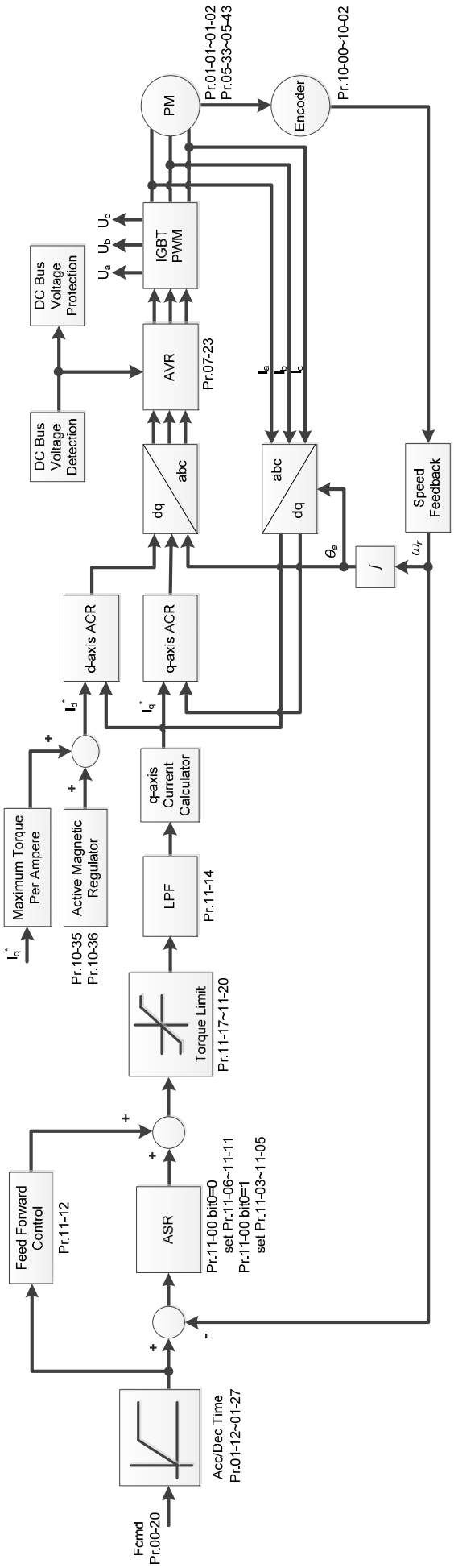

📖 When Pr.00-10 = 0, and you set Pr.00-11 to 5, IMFOC Sensorless control diagram is as follows:

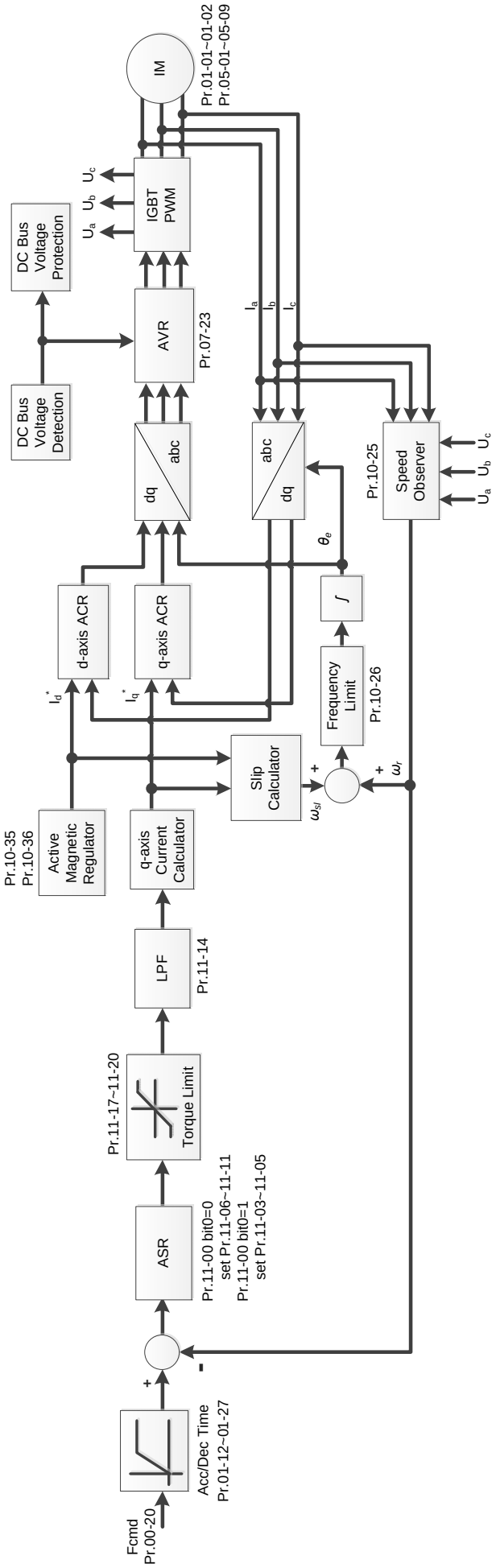

When Pr.00-10 = 0, and you set Pr.00-11 to 6, PM FOC Sensorless control diagram is as follows:

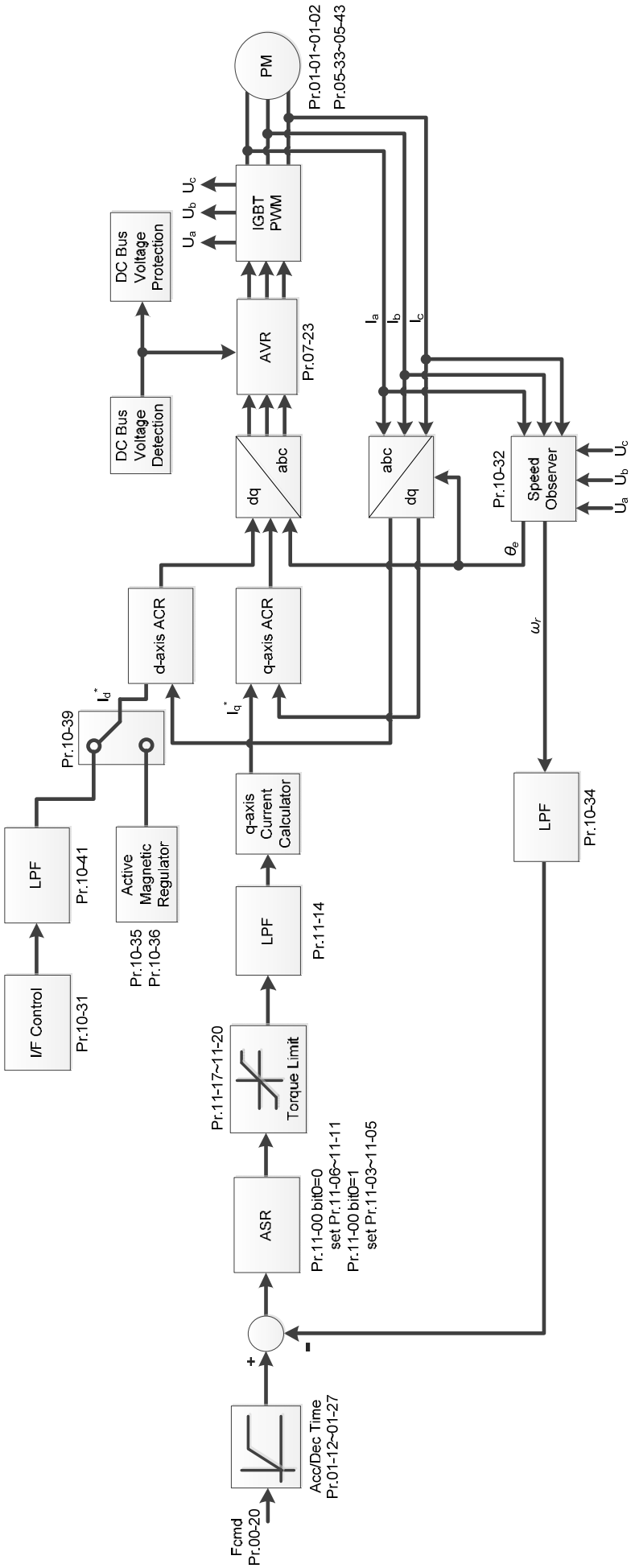

📖 When Pr.00-10 = 0, and you set Pr.00-11 to 7, IPM FOC sensorless control diagram is as follows:

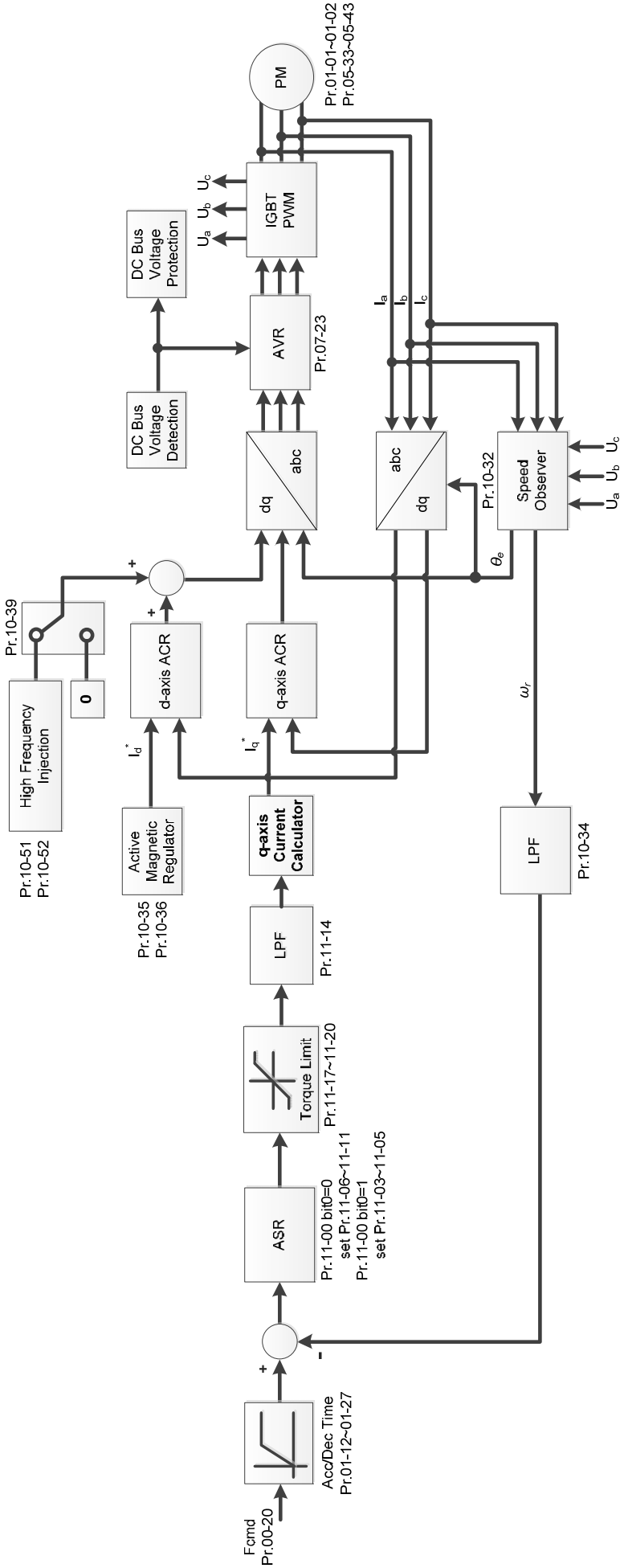

📖 When Pr.00-10 = 0, and you set Pr.00-11 to 8, SynRM sensorless control diagram is as follows:

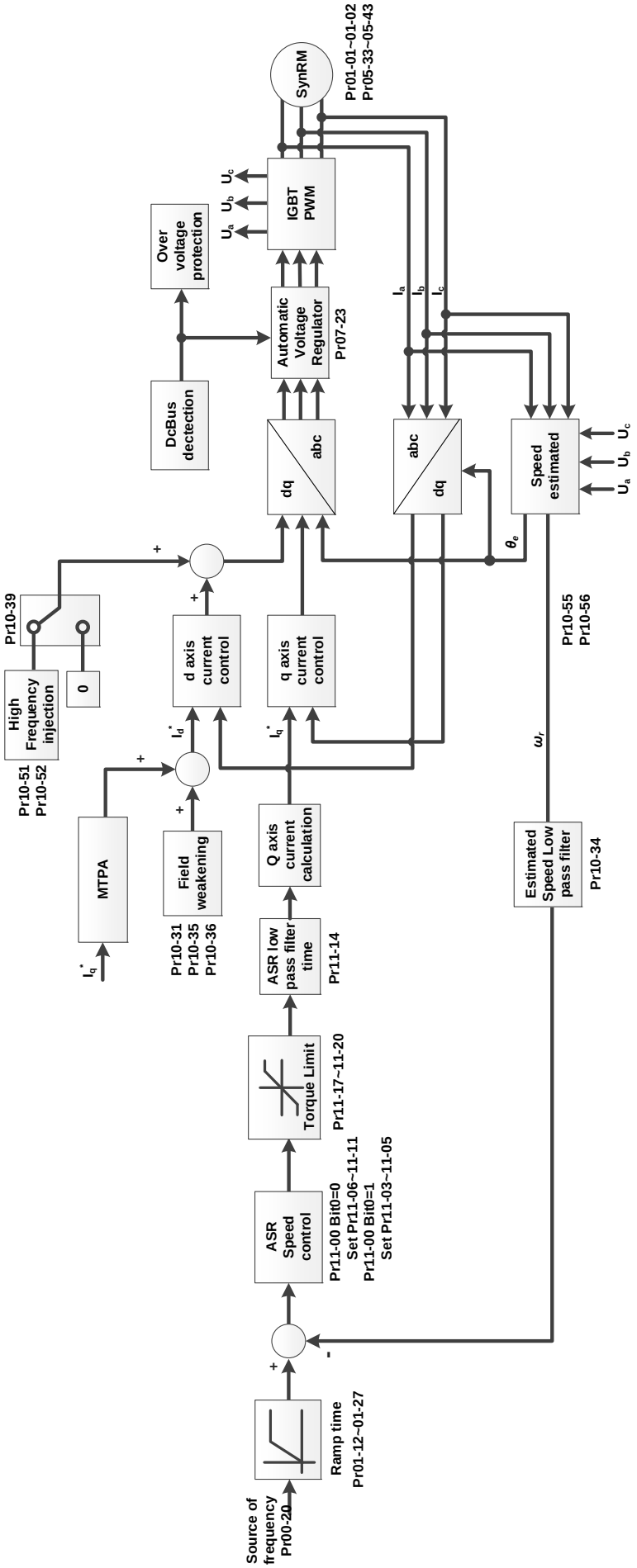

00-13 Control of Torque Mode

Default: 0

Settings
0: IM TQCPG (IM Torque control + Encoder)
1: PM TQCPG (PM Torque control + Encoder)
2: IM TQC Sensorless (IM Sensorless torque control)
4: SynRM TQC Sensorless (SynRM Sensorless torque control)

📖 See the following pages for more information.

📖 Pr.00-13 = 0, IM TQCPG control diagram is as follows:

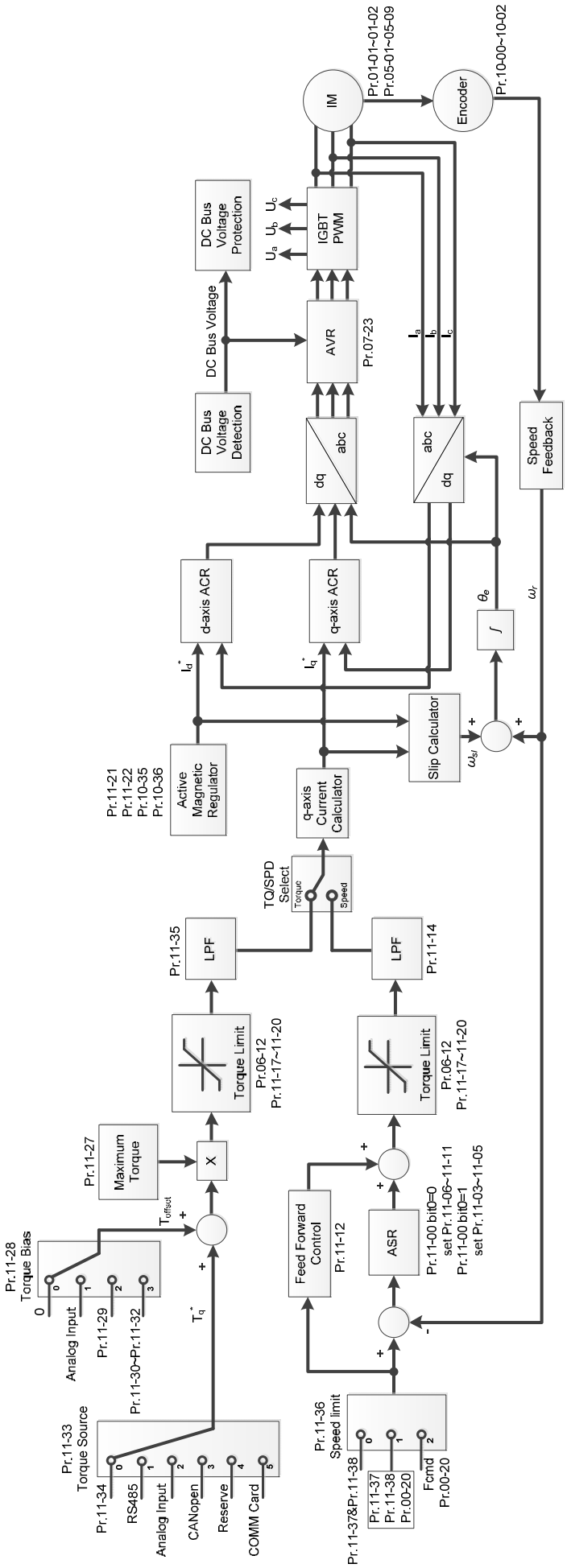

📖 Pr.00-13 = 1, PM TQCPG control diagram is as follows:

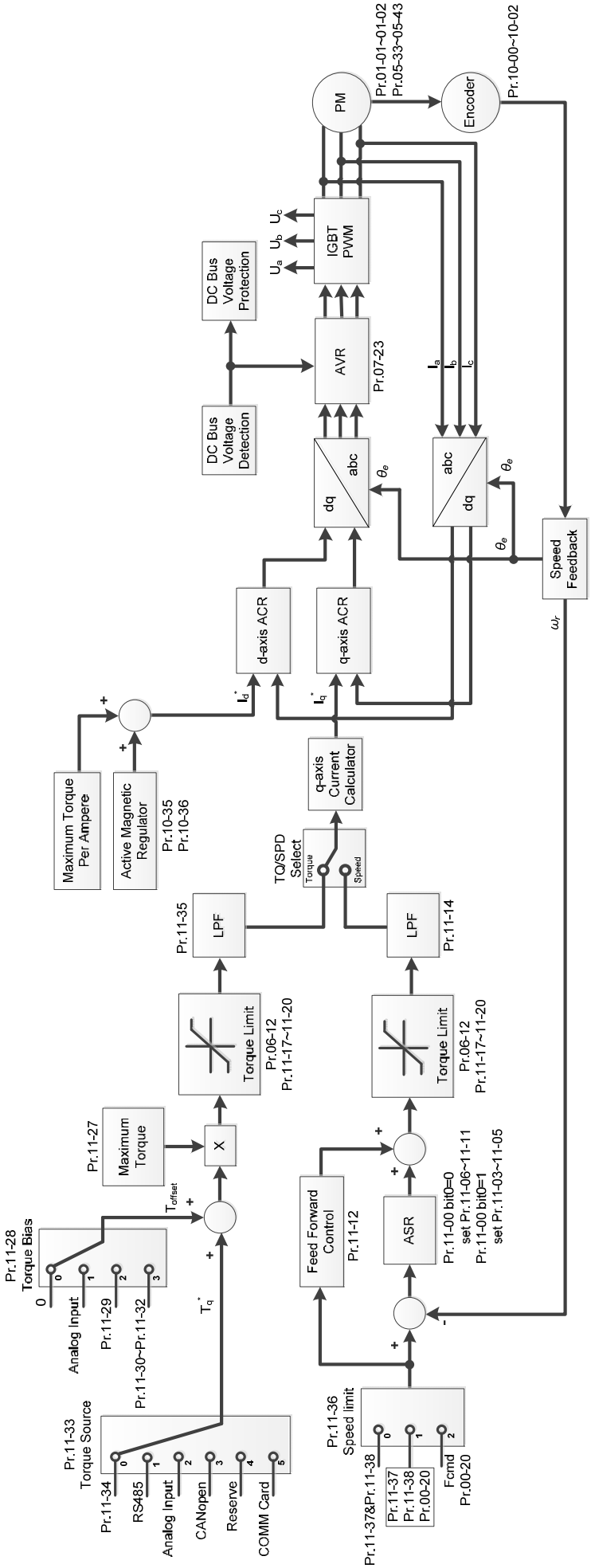

📖 Pr.00-13 = 2, IM TQC Sensorless control diagram is as follows:

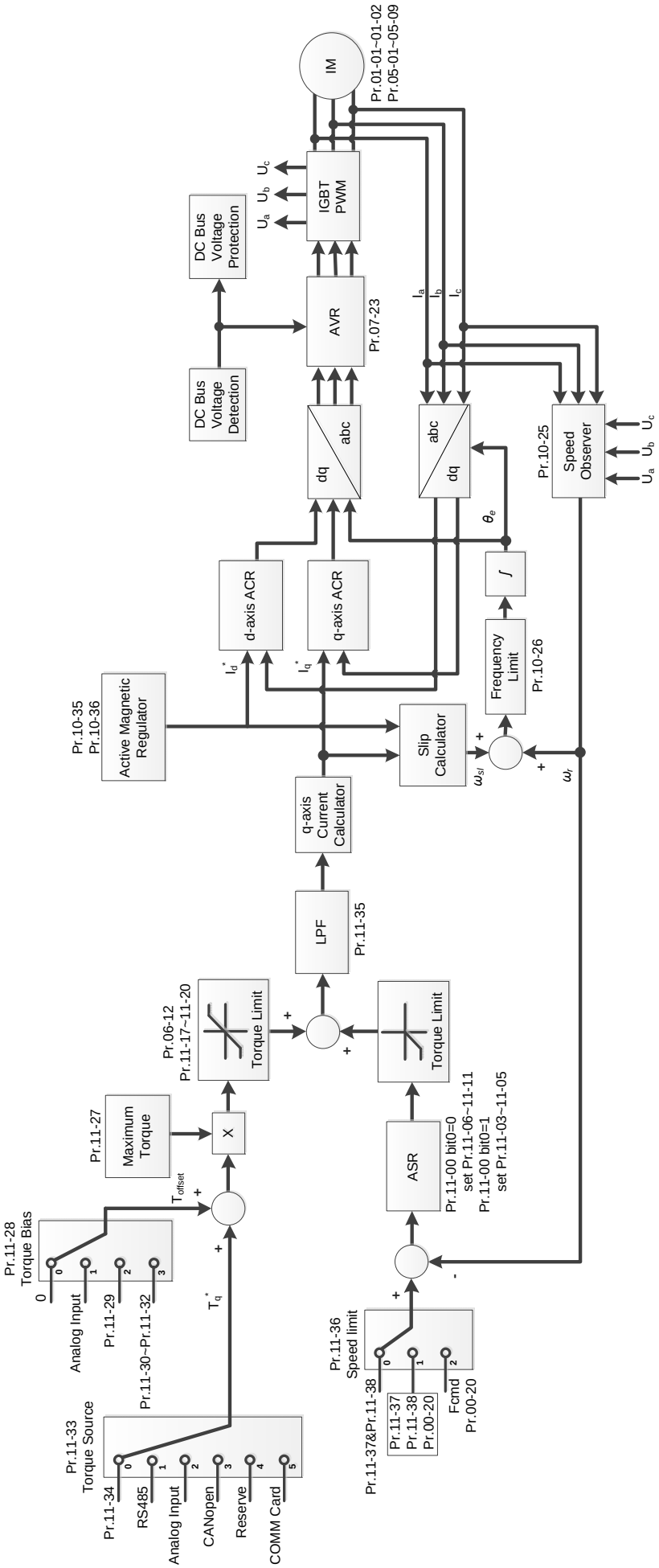

Pr.00-13 = 4, SynRM TQC Sensorless control diagram is as follows; refer to Section 12-2 for SynRM auto-tuning procedure, follow those steps to adjust speed control mode, and then set Pr.00-13 = 4 to be sensorless torque control.

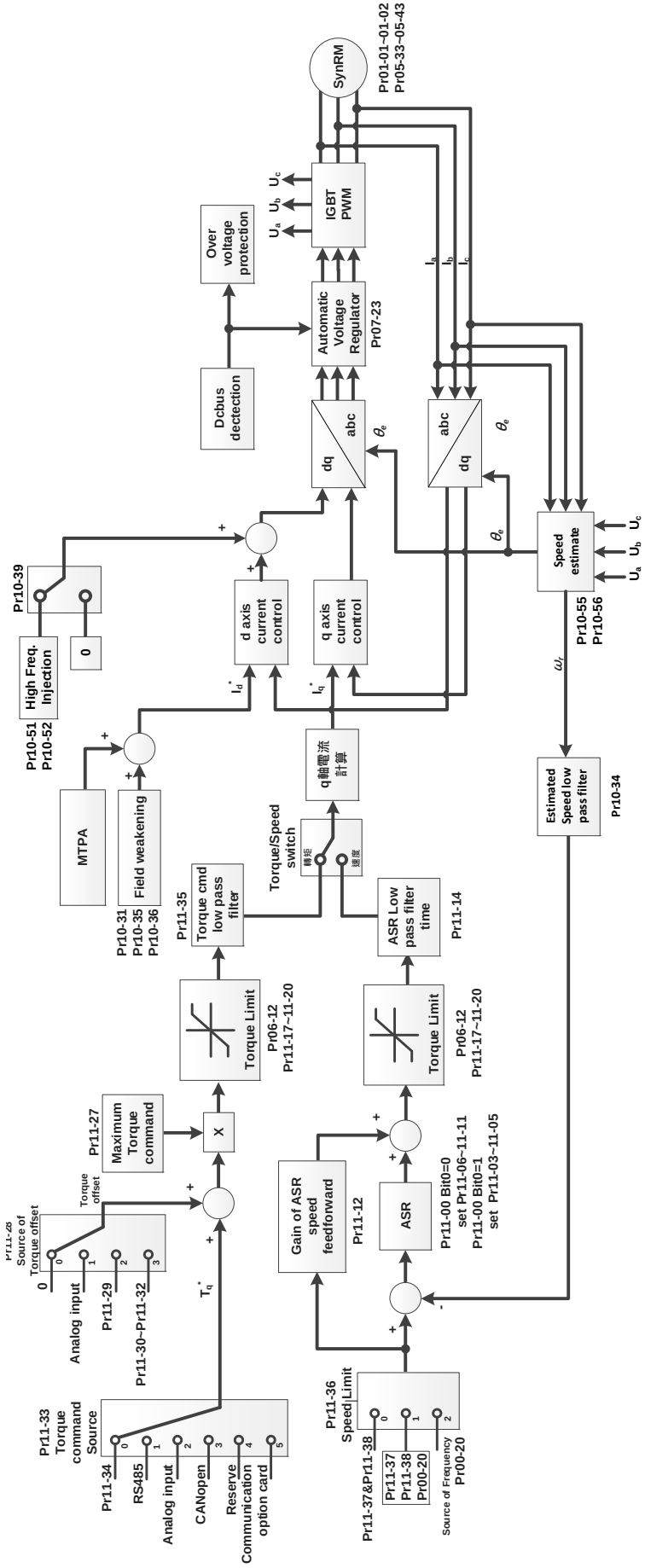

00-16 Load Selection

Default of 230V / 460V models: 0

Settings 0: Heavy duty
1: Super heavy duty

Default of 575V / 690V models: 0

Settings 0: Normal duty
1: Heavy duty
2: Light duty

230V / 460V models

- Heavy duty: over-load ability is 180% rated output current in 3 seconds every 30 seconds. (150% rated output current in 1 minute every 5 minutes). Refer to Pr.00-17 for the setting of carrier frequency. Refer to Chapter 9 Specifications or Pr.00-01 for the rated current.
- Super heavy duty: over-load ability is 200% rated output current in 3 seconds every 30 seconds. (150% rated output current in 1 minute every 5 minutes). Refer to Pr.00-17 for the setting of carrier frequency. Refer to Chapter 9 Specifications or Pr.00-01 for the rated current.
- Pr.00-01 varies with the setting value for Pr.00-16. The default value and maximum for Pr.06-03 and Pr.06-04 also vary with 100% rated current.

575V / 690V models

- Normal duty: over-load ability is 160% rated output current in 3 seconds. (120% rated output current in 1 minute). Refer to Pr.00-17 for the setting of carrier frequency. Refer to Chapter 9 Specifications or Pr.00-01 for the rated current.
- Heavy duty: over-load ability is 180% rated output current in 3 seconds. (150% rated output current in 1 minute). Refer to Pr.00-17 for the setting of carrier frequency. Refer to Chapter 9 Specifications or Pr.00-01 for the rated current.
- Light duty: over-load ability is 120% rated output current in 1 minute. Refer to Pr.00-17 for the setting of carrier frequency and refer to Chapter 9 Specifications or Pr.00-01 for the rated current.
- Pr.00-01 varies with the setting value for Pr.00-16. The default value and maximum for Pr.06-03 and Pr.06-04 also vary with 100% rated current.

00-17 Carrier Frequency

Default: Table below

Settings 2–15 kHz

- This parameter determines the PWM carrier frequency for the AC motor drive.

Heavy duty							
Control mode / Models	Default (kHz)	VF VFPG SVC	IMFOCPG IMTQCPG	PMFOCPG PMTQCPG	PMFOC IPMFOC	IMFOC IMTQC	SRMFOC*
		Settings (kHz)					
VFD007–110C23A/E VFD007–150C43A/E	8	2–15	2–10	4–10	4–10	4–12	4–8
VFD150–370C23A/E VFD185–550C43A/E	6	2–10	2–10	4–10	4–10	4–10	4–8
VFD450–900C23A/E VFD750–5600C43A/E	4	2–9	2–9	4–9	4–9	4–9	4–8

Super heavy duty							
Control mode / Models	Default (kHz)	VF VFPG SVC	IMFOCPG IMTQCPG	PMFOCPG PMTQCPG	PMFOC IPMFOC	IMFOC IMTQC	SRMFOC*
		Settings (kHz)					
VFD007–110C23A/E VFD007–150C43A/E	4	2–15	2–10	4–10	4–10	4–12	4–8
VFD150–450C23A/E VFD185–550C43A/E	4	2–10	2–10	4–10	4–10	4–10	4–8
VFD550–900C23A/E VFD750–3150C43A/E	4	2–9	2–9	4–9	4–9	4–9	4–8
VFD3550–5600C43A VFD3550–5600C43E	3	2–9	2–9	4–9	4–9	4–9	4–8

*SRMFOC mode: the default is 4 kHz.

Light duty / Normal duty / Heavy duty		
Models / Control mode	VF, VFPG, SVC	
	Settings (kHz)	Default (kHz)
1~15HP (575V)	2–15	6
20~600HP (690V)	2–9	4
850HP (690V)	2–9	3

Carrier Frequency	Acoustic Noise	Electromagnetic Noise or Leakage Current	Heat Dissipation	Current Wave
2 kHz	Significant	Minimal	Minimal	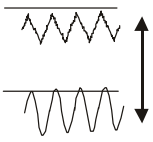
8 kHz	↕	↕	↕	
15 kHz	Minimal	Significant	Significant	

📖 From the table, you see that the PWM carrier frequency has significant influences on the electromagnetic noise, the AC motor drive heat dissipation, and the motor acoustic noise. Therefore, if the surrounding noise is greater than the motor noise, lower the carrier frequency is good to reduce the temperature rise. Although it is quiet operation in the higher carrier frequency, the entire wiring and interference resistance should be considerate.

📖 When Pr.00-11 = 8 (SynRM sensorless control), the maximum carrier frequency is 8 kHz.

📖 When the carrier frequency is higher than the factory setting, it needs to protect by decreasing the carrier frequency. See Pr.06-55 for the related setting and details.

00-19 PLC Command Mask

Default: Read Only

Settings bit0: Control command is forced by PLC control
bit1: Frequency command is forced by PLC control
bit2: Position command is forced by PLC control
bit3: Torque command is forced by PLC control

📖 Determines if the frequency command, control command or torque command is locked by PLC.

00-20 Master Frequency Command Source (AUTO) / Source Selection of the PID Target

Default: 0

Settings
0: Digital keypad
1: RS-485 communication input
2: External analog input (Refer to Pr.03-00–Pr.03-02)
3: External UP / DOWN terminal (multi-function input terminals)
4: Pulse input without direction command (Refer to Pr.10-16 without considering direction), use with PG card
5: Pulse input with direction command (Refer to Pr.10-16), use with PG card
6: CANopen communication card
8: Communication card (does not include CANopen card)

- Determines the master frequency source in the AUTO mode.
- Pr.00-20 and Pr.00-21 are for the settings of frequency source and operation source in AUTO mode. Pr.00-30 and Pr.00-31 are for the settings of frequency source and operation source in HAND mode. You can switch the AUTO / HAND mode with the keypad KPC-CC01 (optional) or the multi-function input terminal (MI) to set the master frequency source.
- The default for the frequency source or operation source is for AUTO mode. It returns to AUTO mode whenever cycle the power. If you use a multi-function input terminal to switch between AUTO and HAND mode, the highest priority is the multi-function input terminal. When the external terminal is OFF, the drive does not accept any operation signal and cannot execute JOG.
- The pulse of Pr.00-20 = 4 (Pulse input without direction command) is input by PG or MI8.

00-21 Operation Command Source (AUTO)

Default: 0

Settings
0: Digital keypad
1: External terminals
2: RS-485 communication input
3: CANopen communication card
5: Communication card (does not include CANopen card)

- Determines the operation frequency source in the AUTO mode.
- When you control the operation command by the keypad KPC-CC01, keys RUN, STOP and JOG (F1) are valid.

00-22 Stop Method

Default: 0

Settings
0: Ramp to stop
1: Coast to stop

- Determines how the motor is stopped when the motor receives the STOP command.

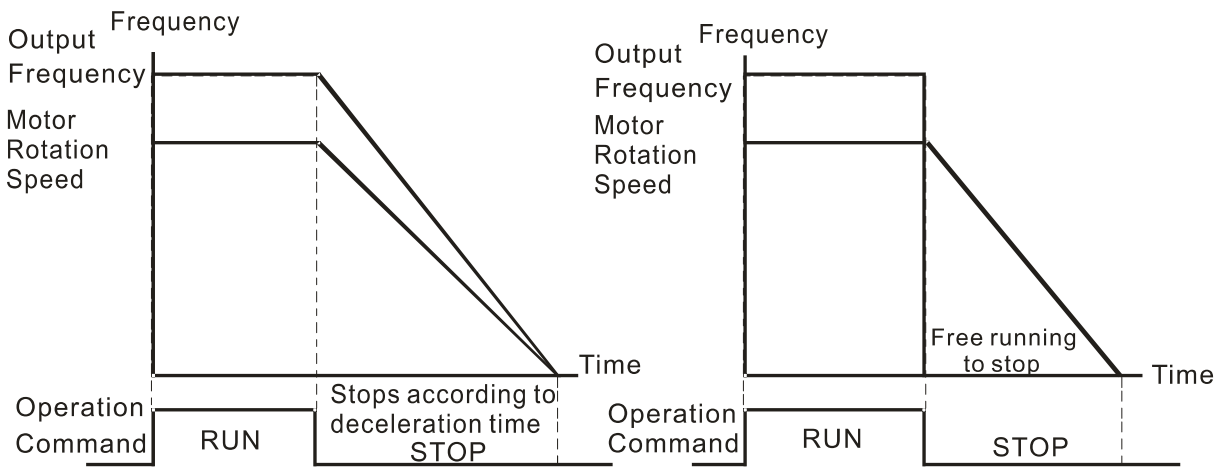

Ramp to Stop and Coast to Stop

1. **Ramp to stop:** the AC motor drive decelerates to 0 or the minimum output frequency (Pr.01-07) according to the set deceleration time, and then to stop.
2. **Coast to stop:** the AC motor drive stops output immediately, and the motor coasts to stop according to the load inertia.
   - ☑ Use “ramp to stop” for the safety of personnel, or to prevent material from being wasted in applications where the motor must stop immediately after the drive stops. You must set the deceleration time accordingly.
   - ☑ If idling is allowed, or the load inertia is large, use “coast to stop”. For example, blowers, punching machines and pumps

00-23 Motor Direction Control

Default: 0

Settings	0: Enable forward / reverse
	1: Disable reverse
	2: Disable forward

📖 Enable the motor to run in the forward and reverse direction. You can use it to prevent a motor from running in a direction that would cause injury or damage to the equipment, especially when only one running direction is allowed for the motor load.

00-24 Digital Operator (Keypad) Frequency Command Memory

Default: Read only

Settings	Read only

📖 If the keypad is the frequency command source, when Lv or Fault occurs, the parameter stores the current frequency command.

00-25 User-Defined Characteristics

Default: 0

Settings bit0–3: user-defined decimal places

0000b: no decimal place

0001b: one decimal place

0010b: two decimal places

0011b: three decimal places

bit 4–15: user-defined unit

000xh: Hz

001xh: rpm

002xh: %

003xh: kg

004xh: m/s

005xh: kW

006xh: HP

007xh: ppm

008xh: 1/m

009xh: kg/s

00Axh: kg/m

00Bxh: kg/h

00Cxh: lb/s

00Dxh: lb/m

00Exh: lb/h

00Fxh: ft/s

010xh: ft/m

011xh: m

012xh: ft

013xh: degC

014xh: degF

015xh: mbar

016xh: bar

017xh: Pa

018xh: kPa

019xh: mWG

01Axh: inWG

01Bxh: ftWG

01Cxh: psi

01Dxh: atm

01Exh: L/s

01Fxh: L/m

020xh: L/h

021xh: m3/s

022xh: m3/h

023xh: GPM

024xh: CFM

xxxxh: Hz

📖 bit 0–3:

The displayed units for the control frequency F page and user-defined (Pr.00-04 = d10, PID feedback) and the displayed number of decimal places for Pr.00-26 (supports up to three decimal places).

📖 bit 4–15:

The displayed units for the control frequency F page, user-defined (Pr.00-04 = d10, PID feedback) and Pr.00-26.

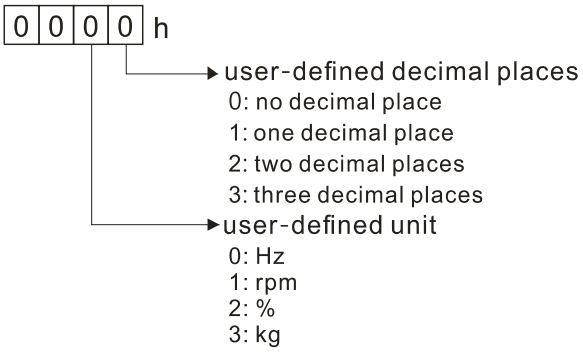

00-26 Maximum User-Defined Value

Default: 0

Settings 0: Disable

0–65535 (when Pr.00-25 is set to no decimal place)

0.0–6553.5 (when Pr.00-25 is set to 1 decimal place)

0.00–655.35 (when Pr.00-25 is set to 2 decimal places)

0.000–65.535 (when Pr.00-25 is set to 3 decimal places)

📖 When Pr.00-26 is NOT set to 0, the user-defined value is enabled. After selecting the displayed unit and number of decimal places with Pr.00-25, the setting value of Pr.00-26 corresponds to Pr.01-00 (drive's maximum operating frequency), and then the motor operation frequency has a linear relationship with the displayed value on the digital keypad.

Example:

When the frequency set in Pr.01-00 = 60.00Hz, the maximum user-defined value for Pr.00-26 is 100.0%. This also means Pr.00-25 is set at 0021h to select % as the unit.

NOTE

Set Pr.00-25 before using Pr.00-26. After you finish setting, when Pr.00-26 is not 0, the displayed unit on the keypad shows correctly according to Pr.00-25 settings.

00-27 User-Defined Value

Default: Read only

Settings Read only

📖 Pr.00-27 displays the user-defined value when Pr.00-26 is not set to 0.

📖 The user-defined function is valid only when Pr.00-20 (frequency source) is set to digital keypad or RS-485 communication.

00-29 LOCAL / REMOTE Selection

Default: 0

Settings 0: Standard HOA function
1: When switching between local and remote, the drive stops
2: When switching between local and remote, the drive runs with REMOTE settings for frequency and operation status
3: When switching between local and remote, the drive runs with LOCAL settings for frequency and operation status
4: When switching between local and remote, the drive runs with LOCAL setting when switched to Local and runs with REMOTE settings when switched to Remote for frequency and operation status.

- The default of Pr.00-29 is 0, that is, the standard (Hand-Off-Auto) function. Set the AUTO frequency and operation source with Pr.00-20 and Pr.00-21. Set the HAND frequency and operation source with Pr.00-30 and Pr.00-31. Select or switch AUTO / HAND mode by using the digital keypad (KPC-CC01) or setting the multi-function input terminal MIx = 41, 42.
- When you set the external terminal (MI) to 41 and 42 (AUTO / HAND mode), Pr.00-29 = 1,2,3,4 are disabled. The external terminal has the highest command priority, and Pr.00-29 functions in standard HOA mode.
- If Pr.00-29 is not set to 0, the Local / Remote function is enabled, and the top right corner of digital keypad KPC-CC01 (optional) displays LOC or REM (the display is available when KPC-CC01 is installed with firmware version higher than version 1.021). Set the LOCAL frequency and operation source with Pr.00-20 and Pr.00-21. Set the REMOTE frequency and operation source with Pr.00-30 and Pr.00-31. Select or switch LOC / REM mode with the digital keypad KPC-CC01 (optional) or set the multi-function input terminal MIx = 56. The AUTO key of the digital keypad is for the REMOTE function, and HAND key is for the LOCAL function.
- When you set the external terminal (MI) to 56 for LOC / REM mode selection, if you set Pr.00-29 to 0, then the external terminal function is disabled.
- When you set the external terminal (MI) to 56 for LOC / REM mode selection, if Pr.00-29 is not set to 0, then AUTO / HAND keys are disabled. In this case, the external terminal has the highest command priority.
- The comparison between the setting of each mode and the PLC address:

PLC address / mode	HOA mode		LOC / REM mode		HOA mode
	HAND-ON	AUTO-ON	LOC-ON	REM-ON	OFF
M1090 =	0	0	0	0	1
M1091 =	1	0	0	0	0
M1092 =	0	1	0	0	0
M1100 =	0	0	1	0	0
M1101 =	0	0	0	1	0

00-30 Master Frequency Command Source (HAND)

Default: 0

Settings
0: Digital keypad
1: RS-485 communication input
2: External analog input (refer to Pr.03-00–Pr.03-02)
3: External UP/DOWN terminal (multi-function input terminals)
4: Pulse input without direction command
(refer to Pr.10-16 without considering direction)
5: Pulse input with direction command (refer to Pr.10-16)
6: CANopen communication card
8: Communication card (does not include CANopen card)

Determines the master frequency source in HAND mode.

00-31 Operation Command Source (HAND)

Default: 0

Settings
0: Digital keypad
1: External terminals
2: RS-485 communication input
3: CANopen communication card
5: Communication card (does not include CANopen card)

Set the source of the master frequency in HAND mode.

Pr.00-20 and Pr.00-21 are for the settings of frequency source and operation source in AUTO mode. Pr.00-30 and Pr.00-31 are for the settings of frequency source and operation source in HAND mode. You can switch the AUTO / HAND mode with the keypad KPC-CC01 (optional) or the multi-function input terminal (MI) to set the master frequency source.

The default for the frequency source or operation source is for AUTO mode. It returns to AUTO mode whenever cycle the power. If you use a multi-function input terminal to switch between AUTO and HAND mode, the highest priority is the multi-function input terminal. When the external terminal is OFF, the drive does not accept any operation signal and cannot execute JOG.

00-32 Digital Keypad STOP Function

Default: 0

Settings
0: STOP key disabled
1: STOP key enabled

Valid when the operation command source is not the digital keypad (Pr.00-21 ≠ 0). When Pr.00-21 = 0, the STOP key on the digital keypad is not affected by the parameter.

00-33 RPWM Mode Selection

Default: 0

Settings
0: Disabled
1: RPWM mode 1
2: RPWM mode 2
3: RPWM mode 3

Different control modes for Pr.00-33:

Motor	Induction Motor (IM)					Permanent Magnet Synchronous Motor (PM)				Synchronous Reluctance Motor (SynRM)
Control Mode	VF	VFPG	SVC	FOC PG	FOC	PM SVC	FOCPG PM	PM FOC	HFI	
0: RPWM mode 1	✓	✓	✓	✓	✓	✓	✓	✓	✓	
1: RPWM mode 2	✓	✓	✓	✓	✓	✓	✓	✓	✓	
2: RPWM mode 3	✓	✓	✓	✓	✓	✓	✓	✓	✓	

When the RPWM function is enabled, the drive randomly distributes the carrier frequency based on actual Pr.00-17 carrier frequency settings.

The RPWM function can be applied to all control modes.

Once the RPWM function is enabled, particularly high frequency audio noise is reduced, and the audio frequency produced by the running motor also changes (usually from a higher to lower).

Three RPWM modes are provided for different applications. Each mode corresponds to different frequency distribution, electromagnetic noise distribution, and audio frequency.

The settings for Pr.00-17 (Carrier Frequency) vary with enabling or disabling RPWM. When the RPWM function is enabled, the default setting value for Pr.00-17 is according to the table below.

Model	Power Range (kW)	Pr.00-17 (Carrier Frequency) Default Setting Value
220V	0.75–7.5	7 kHz
	11–90	6 kHz
440V	0.75–11	7 kHz
	15–55	6 kHz
	75–560	5 kHz

00-34 RPWM Range

Default: 0.0

Settings 0.0–4.0 kHz

When the RPWM function is enabled, the minimum carrier frequency setting for Pr.00-17 is 3 kHz, and the maximum is 9 kHz.

Pr.00-34 is valid only when the RPWM function is enabled (Pr.00-33 ≠ 0).

When the RPWM function is enabled and Pr.00-17 is set to 4 or 8 kHz, the setting range for Pr.00-34 is 0.0–2.0 kHz (±1 kHz).

Example:

When Pr.00-17 = 4 kHz, Pr.00-33 is enabled (= 1, 2, or 3), Pr.00-34 = 2.0 kHz, then the carrier frequency outputs on the basis of 4 kHz, and the random frequency distribution tolerance is ±1 kHz, that is, the carrier frequency randomly fluctuates from 3 kHz to 5 kHz.

When Pr.00-17 = 4 or 8 kHz, the maximum setting for Pr.00-34 is 2.0 kHz (±1 kHz). The carrier frequency fluctuation range is according to the diagram below.

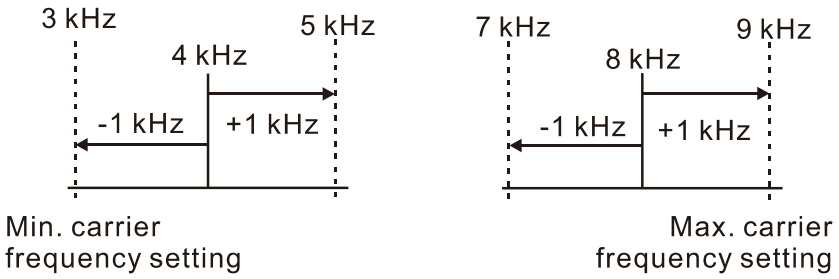

When Pr.00-17 = 5, 6, or 7kHz, the maximum setting for Pr.00-34 is 4.0 kHz (±2 kHz). The carrier frequency fluctuation range is according to the diagram below.

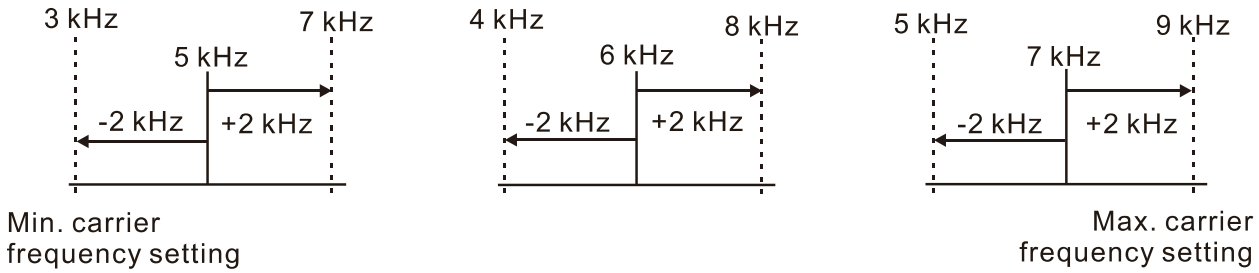

00-37 Over-modulation Gain

Default: 100

Settings 80–120

When the motor operates in the flux-weakening region or voltage saturation region it can be that a higher voltage output is required. Increase Pr.00-37 to increase the output RMS voltage. Increasing the over-modulation gain reduces the output current and enhances the motor efficiency. However, note that low-frequency harmonics created by the six-step square-wave modulation may occur if the gain is too large.

How to use Pr.00-37:

Gradually increase Pr.00-37 setting value to check if the output current reduces and the operation performance improves for an optimal over-modulation gain value.

00-48 Display Filter Time (Current)

Default: 0.100

Settings 0.001–65.535 sec.

Minimize the current fluctuation displayed by the digital keypad.

00-49 Display Filter Time (Keypad)

Default: 0.100

Settings 0.001–65.535 sec.

Minimize the display value fluctuation displayed by the digital keypad.

00-50 Software Version (Date)

Default: Read only

Settings Read only

Displays the current drive software version by date.

01 Basic Parameters

✎ You can set this parameter during operation.

01-00 Maximum Operation Frequency of Motor 1

Default: 60.00 / 50.00

Settings 00.00–599.00 Hz

📖 Determines the AC motor drive's maximum operation frequency range. All the AC motor drive frequency command sources (analog inputs 0–10 V, 4–20 mA, 0–20 mA, ±10 V) are scaled to correspond to the output frequency range.

📖 There is different setting lower limit for each control mode, refer to the following table for setting range of each model:

Control mode / Model	VF, VFPG, SVC	IMFOCPG, IMTQCPG	PMFOCPG, PMTQCPG	PMFOC, IPMFOC	IMFOC, IMTQC
VFD007–110C23A VFD007–150C43A	599 Hz				
VFD150–370C23A VFD185–550C43A	599 Hz	500 Hz			
VFD450–900C23A VFD750–5600C43A	599 Hz	450 Hz			

01-01 Rated / Base Frequency of Motor 1
01-35 Rated / Base Frequency of Motor 2

Default: 60.00 / 50.00

Settings 0.00–599.00 Hz

📖 Set this parameter according to the motor's rated frequency on the motor nameplate. If the motor's rated frequency is 60 Hz, set this parameter to 60. If the motor's rated frequency is 50 Hz, set this parameter to 50.

01-02 Rated / Base Output Voltage of Motor 1
01-36 Rated / Base Output Voltage of Motor 2

Default:
200.0 / 400.0 / 600.0 / 660.0

Settings 230V models: 0.0–255.0 V
460V models: 0.0–510.0 V
575V models: 0.0–637.0 V
690V models: 0.0–765.0 V

📖 Set this parameter according to the rated voltage on the motor nameplate. If the motor's rated voltage is 220 V, set this parameter to 220.0. If the motor's rated voltage is 200 V, set this parameter to 200.0.

📖 There are many motor types in the market and the power system for each country is also different. The economical and convenient solution is to install an AC motor drive. Then there is no problem using the motor with different voltage and frequency inputs, and the motor drive can improve the original motor characteristics and useful life.

01-03 Mid-point Frequency 1 of Motor 1

Default: 3.00

Settings 0.00–599.00 Hz

01-04 Mid-point Voltage 1 of Motor 1

Default:
11.0 / 22.0 / 0.0 / 0.0

Settings 230V models: 0.0–240.0 V
460V models: 0.0–480.0 V
575V models: 0.0–637.0 V
690V models: 0.0–720.0 V

01-37 Mid-point Frequency 1 of Motor 2

Default: 3.00

Settings 0.00–599.00 Hz

01-38 Mid-point Voltage 1 of Motor 2

Default:
11.0 / 22.0 / 0.0 / 0.0

Settings 230V models: 0.0–240.0 V
460V models: 0.0–480.0 V
575V models: 0.0–637.0 V
690V models: 0.0–720.0 V

01-05 Mid-point Frequency 2 of Motor 1

Default: 1.50

Settings 0.00–599.00 Hz

01-06 Mid-point Voltage 2 of Motor 1

Default:
5.0 / 10.0 / 0.0 / 0.0

Settings 230V models: 0.0–240.0 V
460V models: 0.0–480.0 V
575V models: 0.0–637.0 V
690V models: 0.0–720.0 V

01-39 Mid-point Frequency 2 of Motor 2

Default: 1.50

Settings 0.00–599.00 Hz

01-40 Mid-point Voltage 2 of Motor 2

Default:
5.0 / 10.0 / 0.0 / 0.0

Settings 230V models: 0.0–240.0 V
460V models: 0.0–480.0 V
575V models: 0.0–637.0 V
690V models: 0.0–720.0 V

01-07 Minimum Output Frequency of Motor 1

Default: 0.50

Settings 0.00–599.00 Hz

01-08 Minimum Output Voltage of Motor 1

Default:
1.0 / 2.0 / 0.0 / 0.0

Settings 230V models: 0.0–240.0 V
460V models: 0.0–480.0 V
575V models: 0.0–637.0 V
690V models: 0.0–720.0 V

01-41 Minimum Output Frequency of Motor 2

Default: 0.50

Settings 0.00–599.00 Hz

01-42 Minimum Output Voltage of Motor 2

Default:
1.0 / 2.0 / 0.0 / 0.0

Settings 230V models: 0.0–240.0 V
460V models: 0.0–480.0 V
575V models: 0.0–637.0 V
690V models: 0.0–720.0 V

- You usually set the V/F curve according to the motor's allowable loading characteristics. Pay special attention to the motor's heat dissipation, dynamic balance, and bearing lubrication when the loading characteristics exceed the loading limit of the motor.
- There is no limit for the voltage setting, but a high voltage at a low frequency may cause motor damage, overheating, and trigger the stall prevention or the over-current protection; therefore, use low voltage at low frequency to prevent motor damage or drive error.
- Pr.01-35 to Pr.01-42 is the V/F curve for motor 2. When setting the multi-function input terminals [Pr.02-01–02-08 and Pr.02-26–Pr.02-31 (extension card)] to 14, the AC motor drive acts with the second V/F curve.
- The diagram below shows the V/F curve for motor 1. You can use the same V/F curve for motor 2.

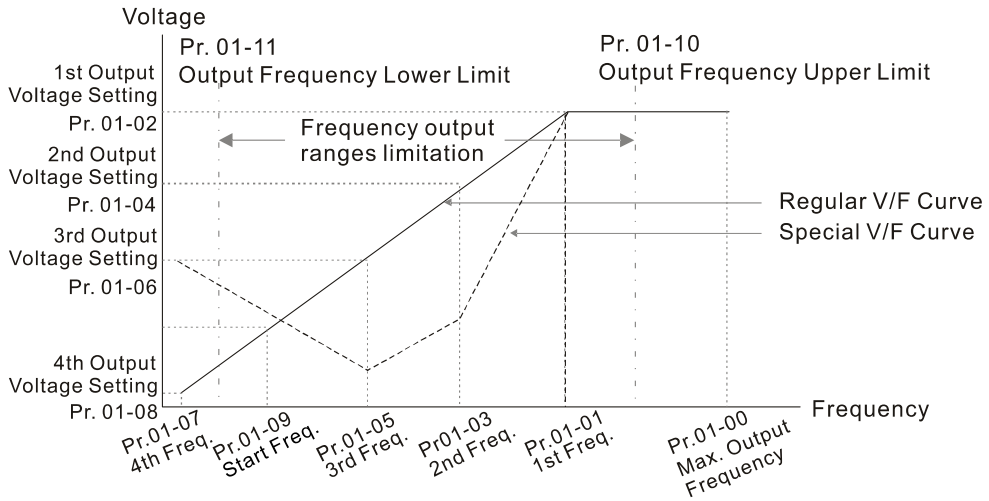

V/F Curve and The Related Parameters

Common settings for the V/F curve:

(1) General purpose

Motor spec. 60Hz

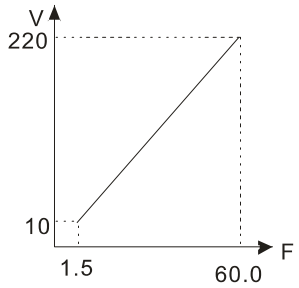

Pr.	Setting
01-00	60.0
01-01	60.0
01-02	220.0
01-03 01-05	1.50
01-04 01-06	10.0
01-07	1.50
01-08	10.0

Motor spec. 50Hz

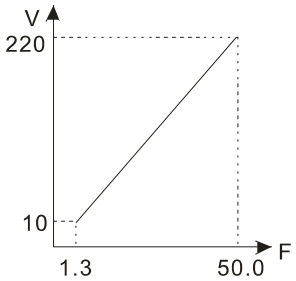

Pr.	Setting
01-00	50.0
01-01	50.0
01-02	220.0
01-03 01-05	1.30
01-04 01-06	10.0
01-07	1.30
01-08	10.0

(2) For fan and hydraulic machinery

Motor spec. 60Hz

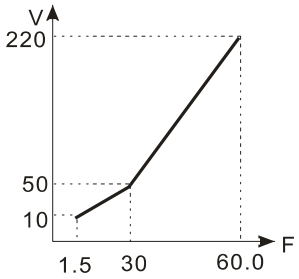

Pr.	Setting
01-00	60.0
01-01	60.0
01-02	220.0
01-03 01-05	30.0
01-04 01-06	50.0
01-07	1.50
01-08	10.0

Motor spec. 50Hz

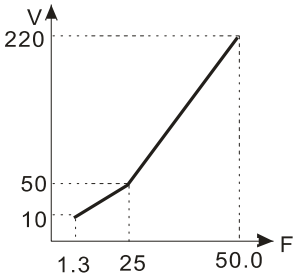

Pr.	Setting
01-00	50.0
01-01	50.0
01-02	220.0
01-03 01-05	25.0
01-04 01-06	50.0
01-07	1.30
01-08	10.0

(3) High starting torque

Motor spec. 60Hz

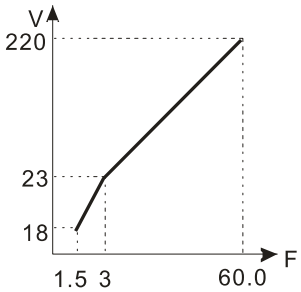

Pr.	Setting
01-00	60.0
01-01	60.0
01-02	220.0
01-03 01-05	3.00
01-04 01-06	23.0
01-07	1.50
01-08	18.0

Motor spec. 50Hz

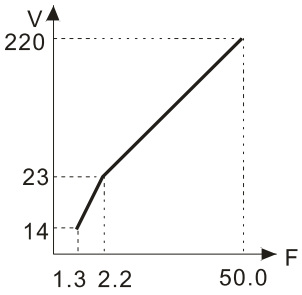

Pr.	Setting
01-00	50.0
01-01	50.0
01-02	220.0
01-03 01-05	2.20
01-04 01-06	23.0
01-07	1.30
01-08	14.0

01-09 Start-Up Frequency

Default: 0.50

Settings 0.00–599.00 Hz

When the starting frequency is larger than the minimum output frequency, the drive's frequency output starts when the starting frequency reaches the F command. Refer to the following diagram for details.

Fcmd: frequency command

Fstart: start-up frequency (Pr.01-09)

fstart: actual start-up frequency of the drive

Fmin: 4th output frequency setting (Pr.01-07 / Pr.01-41)

Flow: output frequency lower limit (Pr.01-11)

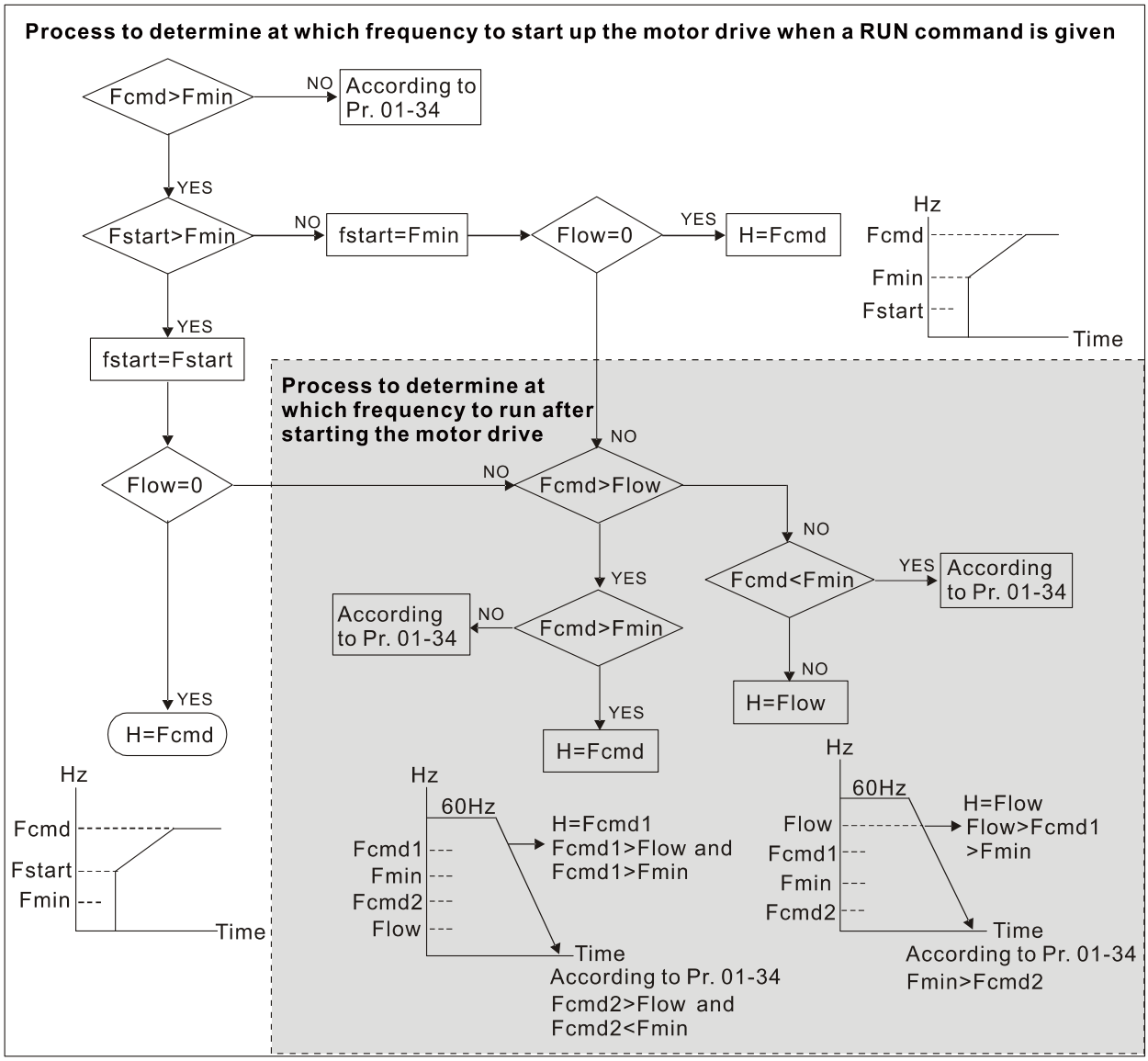

When Fcmd > Fmin and Fcmd < Fstart:

If Flow < Fcmd, the drive runs directly by Fcmd.

If Flow ≥ Fcmd, the drive runs with Fcmd, and then rises to Flow according to acceleration time.

The drive's output frequency goes directly to 0 when decelerating to Fmin.

01-10 Output Frequency Upper Limit

Default: 599.00

Settings 0.00–599.00 Hz

01-11 Output Frequency Lower Limit

Default: 0.00

Settings 0.00–599.00 Hz

If the output frequency setting is higher than the upper limit (Pr.01-10), the drive runs with the upper limit frequency. If the output frequency setting is lower than the lower limit (Pr.01-11) but higher than the minimum output frequency (Pr.01-07), the drive runs with the lower limit frequency. Set the upper limit frequency > the lower limit frequency (Pr.01-10 setting value must be > Pr.01-11 setting value).

If the slip compensation function (Pr.07-27) is enabled for the drive, the drive's output frequency may exceed the Frequency command.

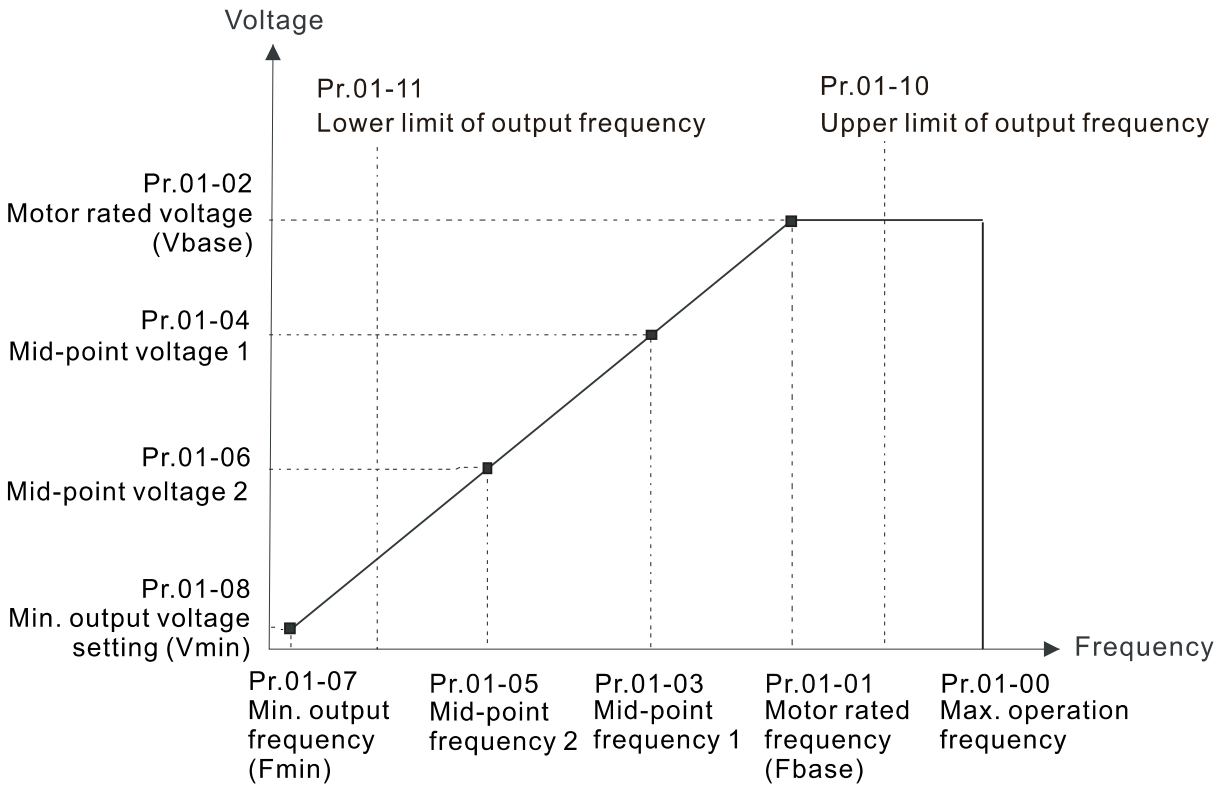

- When the drive starts, it operates according to the V/F curve and accelerates from the minimum output frequency (Pr.01-07) to the setting frequency. It is not limited by the lower output frequency settings.
- Use the frequency upper and lower limit settings to prevent operator misuse, overheating caused by the motor's operating at a too low frequency, or mechanical wear due to a too high operation frequency.
- If the frequency upper limit setting is 50 Hz and the frequency setting is 60 Hz, the maximum operation frequency is 50 Hz.
- If the frequency lower limit setting is 10 Hz and the minimum operation frequency setting (Pr.01-07) is 1.5 Hz, then the drive operates at 10 Hz when the Frequency command is higher than Pr.01-07 but lower than 10 Hz. If the Frequency command is lower than Pr.01-07, the drive is in ready status without output.

01-12	Acceleration Time 1
01-13	Deceleration Time 1
01-14	Acceleration Time 2
01-15	Deceleration Time 2
01-16	Acceleration Time 3
01-17	Deceleration Time 3
01-18	Acceleration Time 4
01-19	Deceleration Time 4
01-20	JOG Acceleration Time
01-21	JOG Deceleration Time

Default: 10.00

The default of motor drive with 30HP and above: 60.00 / 60.0

Settings Pr.01-45=0: 0.00–600.00 seconds

Pr.01-45=1: 0.00–6000.0 seconds

- The acceleration time determines the time required for the AC motor drive to ramp from 0.00 Hz to the maximum operation frequency (Pr.01-00). The deceleration time determines the time required for the AC motor drive to decelerate from the maximum operation frequency (Pr.01-00) down to 0.00 Hz.
- The acceleration and deceleration time are invalid when using Pr.01-44 Auto-acceleration and Auto-deceleration Setting.
- Select the Acceleration / Deceleration time 1, 2, 3, 4 with the multi-function input terminals settings. The defaults are Acceleration Time 1 and Deceleration Time 1.
- With the enabled torque limits and stall prevention functions, the actual acceleration and deceleration time are longer than the above action time.
- Note that setting the acceleration and deceleration time too short may trigger the drive's protection function (Pr.06-03 Over-current Stall Prevention during Acceleration or Pr.06-01 Over-voltage Stall Prevention), and the actual acceleration and deceleration time are longer than this setting.
- Note that setting the acceleration time too short may cause motor damage or trigger drive protection due to over-current during the drive's acceleration.
- Note that setting the deceleration time too short may cause motor damage or trigger drive protection due to over-current during the drive's deceleration or over-voltage.
- Use suitable brake resistor (refer to Chapter 07 Optional Accessories) to decelerate in a short time and prevent over-voltage.
- When you enable Pr.01-24–Pr.01-27 (S-curve acceleration and deceleration begin and arrival time), the actual acceleration and deceleration time are longer than the setting.

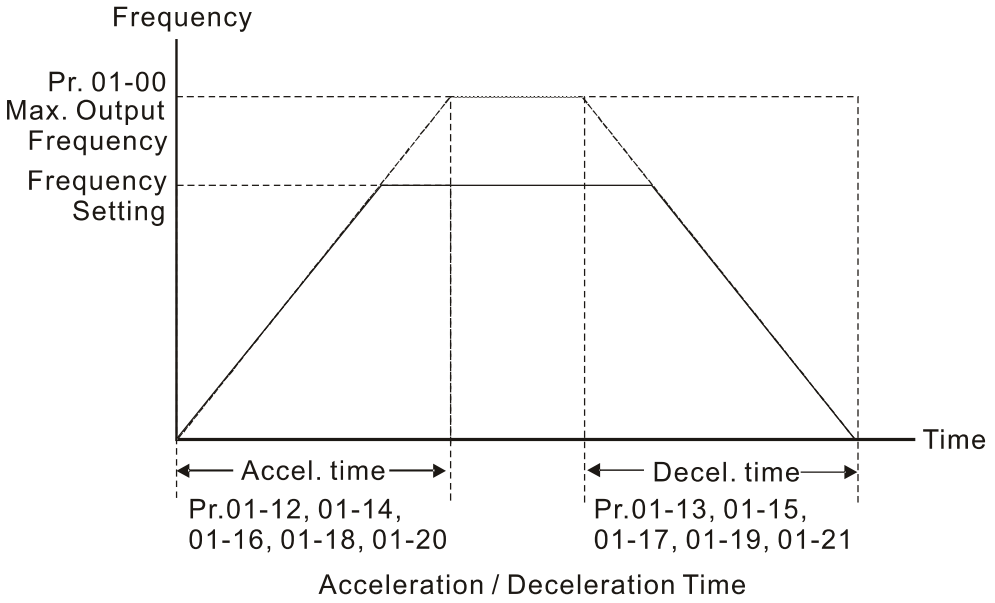

01-22 JOG Frequency

Default: 6.00

Settings 0.00–599.00 Hz

You can use both the external terminal JOG and F1 key on the optional keypad KPC-CC01 to set the JOG function. When the JOG command is ON, the AC motor drive accelerates from 0 Hz to the JOG frequency (Pr.01-22). When the JOG command is OFF, the AC motor drive decelerates from the JOG frequency to stop. The JOG acceleration and deceleration time (Pr.01-20, Pr.01-21) are the time to accelerate from 0.00 Hz to JOG frequency (Pr.01-22).

You cannot execute the JOG command when the AC motor drive is running. When the JOG command is executing, other operation commands are invalid.

01-23 Switch Frequency between First and Fourth Accel. / Decel.

Default: 0.00

Settings 0.00–599.00 Hz

This function does not require the external terminal switching function; it switches the acceleration and deceleration time automatically according to the Pr.01-23 setting. If you set the external terminal, the external terminal has priority over Pr.01-23.

Use this parameter to set the switch frequency between acceleration and deceleration slope. The First / Fourth Accel. / Decel. slope is calculated by the Max. Operation Frequency (Pr.01-00) / acceleration / deceleration time.

Example: When the Max. Operation Frequency (Pr.01-00) = 80 Hz, and Switch Frequency between First and Fourth Accel. / Decel. (Pr.01-23) = 40 Hz:

a. If Acceleration Time 1 (Pr.01-02) = 10 sec., Acceleration Time 4 (Pr.01-18) = 6 sec., then the acceleration time is 3 sec. for 0–40 Hz and 5 sec. for 40–80 Hz.
b. If Deceleration Time 1 (Pr.01-13) = 8 sec., Deceleration Time 4 (Pr.01-19) = 2 sec., then the deceleration time is 4 sec. for 80–40 Hz and 1 sec. for 40–0 Hz.

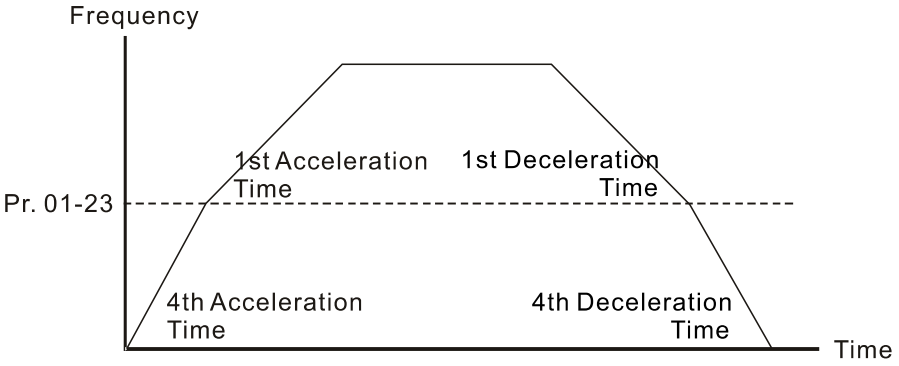

1st/4th Acceleration/Deceleration Frequency Switching

01-24	S-curve for Acceleration Begin Time 1
01-25	S-curve for Acceleration Arrival Time 2
01-26	S-curve for Deceleration Begin Time 1
01-27	S-curve for Deceleration Arrival Time 2

Default: 0.20

Settings Pr.01-45=0: 0.00–25.00 seconds

Pr.01-45=1: 0.00–250.0 seconds

- Using an S-curve gives the smoothest transition between speed changes. The acceleration and deceleration curve adjusts the acceleration and deceleration S-curve. When enabled, the drive produces a different acceleration and deceleration curve according to the acceleration and deceleration time.
- The S-curve function is invalid when you set the acceleration and deceleration time to 0.
- When Pr.01-12, Pr.01-14, Pr.01-16, Pr.01-18 ≥ Pr.01-24 and Pr.01-25,
  the actual acceleration time = Pr.01-12, Pr.01-14, Pr.01-16, Pr.01-18 + (Pr.01-24 + Pr.01-25) / 2.
- When Pr.01-13, Pr.01-15, Pr.01-17, Pr.01-19 ≥ Pr.01-26 and Pr.01-27,
  the actual deceleration time = Pr.01-13, Pr.01-15, Pr.01-17, Pr.01-19 + (Pr.01-26 + Pr.01-27) / 2

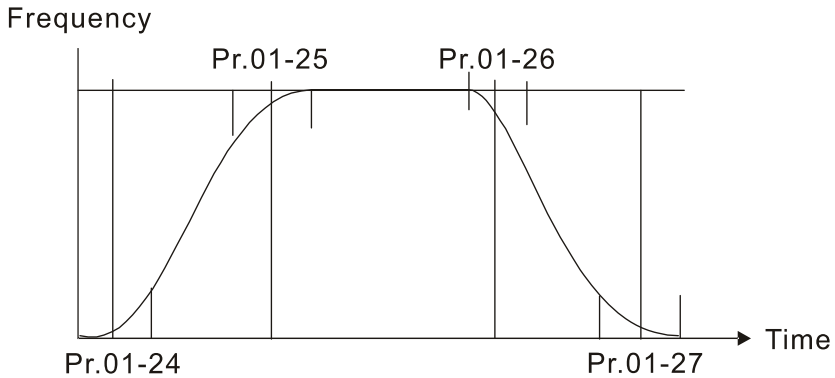

01-28	Skip Frequency 1 (Upper Limit)
01-29	Skip Frequency 1 (Lower Limit)
01-30	Skip Frequency 2 (Upper Limit)
01-31	Skip Frequency 2 (Lower Limit)
01-32	Skip Frequency 3 (Upper Limit)
01-33	Skip Frequency 3 (Lower Limit)

Default: 0.00

Settings 0.00~599.00 Hz

- Sets the AC motor drive's skip frequency. The drive's frequency setting skips these frequency ranges. However, the frequency output is continuous. There are no limits for these six parameters and you can combine them. Pr.01-28 does not need to be greater than Pr.01-29; Pr.01-30 does not need to be greater than Pr.01-31; Pr.01-32 does not need to be greater than Pr.01-33. You can set Pr.01-28–01-33 as you required. There is no size distinction among these six parameters.
- These parameters set the skip frequency ranges for the AC motor drive. You can use this function to avoid frequencies that cause mechanical resonance. The skip frequencies are useful when a motor has resonance vibration at a specific frequency bandwidth. Skipping this frequency avoids the vibration. There are three frequency skip zones available.
- You can set the Frequency command (F) within the range of skip frequencies. Then the output frequency (H) is limited to the lower limit of skip frequency ranges.
- During acceleration and deceleration, the output frequency still passes through the skip frequency ranges.

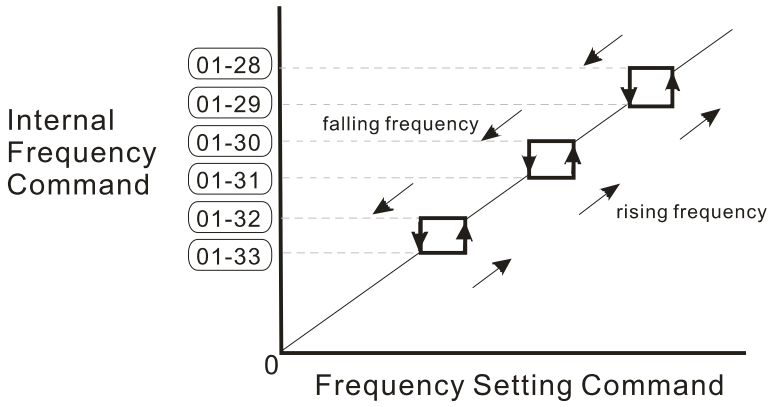

01-34 Zero-speed Mode

Default: 0

Settings 0: Output waiting
1: Zero-speed operation
2: Minimum frequency (Refer to Pr.01-07 and Pr.01-41)

- When the drive's Frequency command is lower than Fmin (Pr.01-07 or Pr.01-41), the drive operates according to this parameter.
- 0: the AC motor drive is in waiting mode without voltage output from terminals U, V, W.
- 1: the drive executes the DC brake by Vmin (Pr.01-08 and Pr.01-42) in V/F, FOC sensorless, and SVC modes. And it executes zero-speed operation in VFPG and FOCPG mode.
- 2: the AC motor drive runs using Fmin (Pr.01-07, Pr.01-41) and Vmin (Pr.01-08, Pr.01-42) in V/F, VFPG, SVC, FOC sensorless and FOCPG modes.

In V/F, VFPG, SVC and FOC sensorless modes:

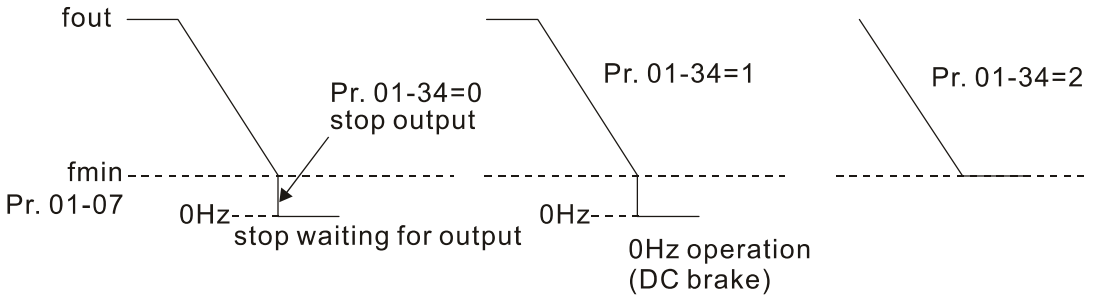

In FOCPG mode, when Pr.01-34 is set to 2, the AC motor drive operates according to this setting.

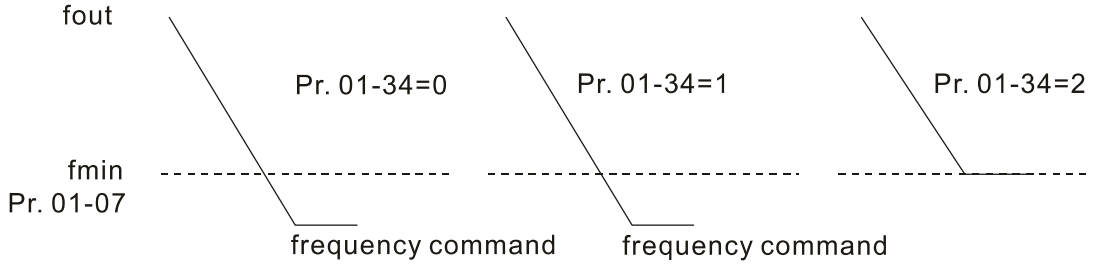

01-43 V/F Curve Selection

Default: 0

Settings
0: V/F curve determined by Pr.01-00–01-08
1: V/F curve to the power of 1.5
2: V/F curve to the power of 2
3: 60 Hz, voltage saturation in 50 Hz
4: 72 Hz, voltage saturation in 60 Hz
5: 50 Hz, decrease gradually with cube
6: 50 Hz, decrease gradually with square
7: 60 Hz, decrease gradually with cube
8: 60 Hz, decrease gradually with square
9: 50 Hz, medium starting torque
10: 50 Hz, high starting torque
11: 60 Hz, medium starting torque
12: 60 Hz, high starting torque
13: 90 Hz, voltage saturation in 60 Hz
14: 120 Hz, voltage saturation in 60 Hz
15: 180 Hz, voltage saturation in 60 Hz

When setting to 0, refer to Pr.01-01–01-08 for the motor 1 V/F curve. For motor 2, refer to Pr.01-35–01-42.

When setting to 1 or 2, the second and third voltage frequency settings are invalid.

If the load of the motor is a variable torque load (torque is in direct proportion to the rotating speed, such as the load of a fan or a pump), the load torque is low at low rotating speed. You can decrease the input voltage appropriately to make the magnetic field of the input current smaller and reduce flux loss and iron loss for the motor to increase efficiency.

When you set the V/F curve to high power, it has lower torque at low frequency, and the drive is

not suitable for rapid acceleration and deceleration. Do NOT use this parameter for rapid acceleration and deceleration.

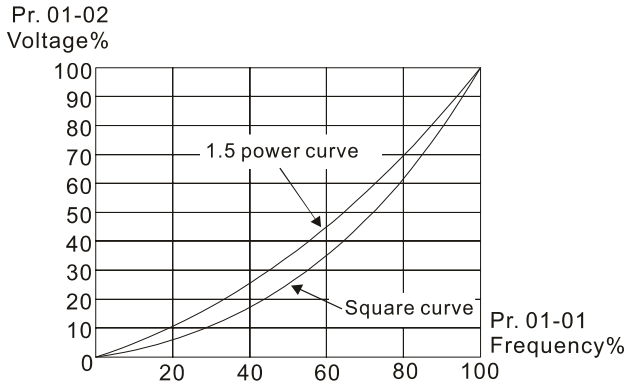

01-44 Auto-acceleration and Auto-deceleration Setting

Default: 0

Settings 0: Linear acceleration and linear deceleration
1: Auto-acceleration and linear deceleration
2: Linear acceleration and auto-deceleration
3: Auto-acceleration and auto-deceleration
4: Stall prevention by auto-acceleration and auto-deceleration (limited by Pr.01-12 to Pr.01-21)

- 0 (linear acceleration and linear deceleration): the drive accelerates and decelerates according to the setting for Pr.01-12–01-19.
- 1 or 2 (auto / linear acceleration and auto / linear deceleration): the drive auto-tunes the acceleration and deceleration to effectively reduce the mechanical vibration during the load start-up and stop and make the auto-tuning process more easier. It does not stall during acceleration and does not need a brake resistor during deceleration to stop. It can also improve operation efficiency and save energy.
- 3 (auto-acceleration and auto-deceleration–decelerating by the actual load): the drive auto-detects the load torque and automatically accelerates from the fastest acceleration time and smoothest start-up current to the setting frequency. During deceleration, the drive automatically determines the loaded regenerative energy to steadily and smoothly stop the motor in the fastest deceleration time.
- 4 (stall prevention by auto-acceleration and deceleration–reference to the acceleration and deceleration time settings): if the acceleration and deceleration time are within a reasonable range, the actual acceleration and deceleration time refer to Pr.01-12–01-19 settings. If the acceleration and deceleration time are too short, the actual acceleration and deceleration time are greater than the acceleration and deceleration time settings.

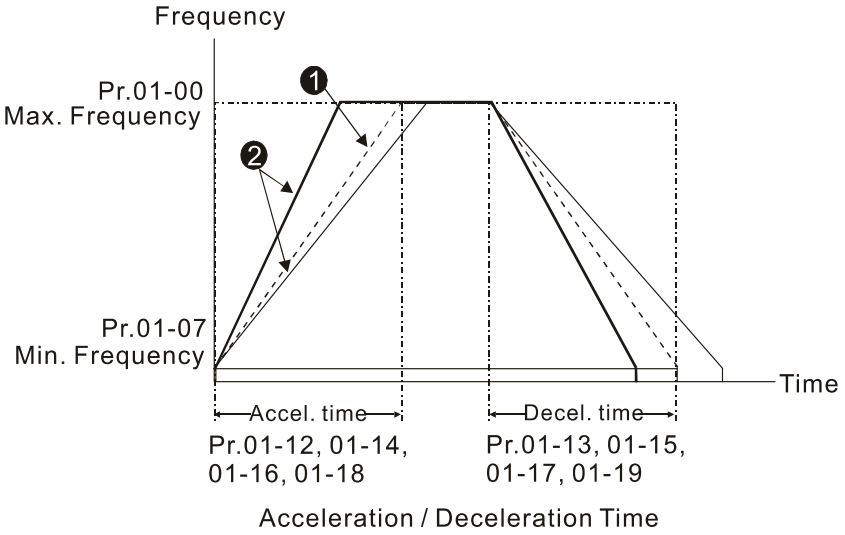

❶ Optimize the acceleration / deceleration time when Pr.01-44 is set to 0.
❷ Optimize the acceleration / deceleration time which load needs actually when Pr.01-44 is set to 3.

01-45 Time Unit for Acceleration and Deceleration and S Curve

Default: 0

Settings 0: Unit 0.01 sec.
1: Unit 0.1 sec.

01-46 CANopen Quick Stop Time

Default: 1.00

Settings Pr. 01-45=0: 0.00–600.00 sec.
Pr. 01-45=1: 0.0–6000.0 sec.

Sets the time required to decelerate from the maximum operation frequency (Pr.01-00) to 0.00 Hz through the CANopen control.

01-49 Deceleration Method Selection

Default: 0

Settings 0: Normal deceleration
1: Over-voltage energy restriction
2: Traction energy control (TEC)
3: Electromagnetic energy traction control

Different control modes for Pr.01-49:

Motor	Induction Motor (IM)					Permanent Magnet Synchronous Motor (PM)				Synchronous Reluctance Motor (SynRM)
Control Mode	VF	VFPG	SVC	FOCPG	FOC	PM SVC	FOCPG PM	PM FOC	HFI	
0: Normal deceleration	✓	✓	✓	✓	✓	✓	✓	✓	✓	✓
1: Over-voltage energy restriction	✓	✓								
2: Traction energy control (TEC)	✓	✓								
3: Electromagnetic energy traction control	✓	✓			✓					

- 0: The drive decelerates or stops based on the original deceleration time settings. Use this setting when brake resistors are used.
- 1: During deceleration, the drive controls the motor according to Pr.06-01 (Over-voltage Stall Prevention) setting and the regenerative DC bus voltage. When the regenerative DC bus voltage reaches 95% of Pr.06-01, the controller is enabled. If Pr.06-01=0, the drive controls on the basis of the working voltage and regenerative DC bus voltage instead. When using this method, the drive decelerates according to the deceleration time setting. However, the actual deceleration time is equal to or larger than the deceleration setting time.
- 2: During deceleration, the drive controls the motor according Pr.06-01 (Over-voltage Stall Prevention) setting and the regenerative DC bus voltage. When the regenerative DC bus voltage reaches 95% of Pr.06-01, the drive dynamically adjusts the output frequency and output voltage to consume the regenerative energy. Use this method when the deceleration time that is set to fulfill the system requirement for application triggers over-voltage.
- 3: During operation (acceleration / steady speed / deceleration), the drive adjusts the output voltage according to the amount of regenerative energy and consumes the regenerative energy timely to reduce the risk of over-voltage. Moreover, you can also use Pr.01-50 (Electromagnetic Traction Energy Consumption Coefficient) to adjust the drive's output voltage strength.
- If you use the electromagnetic energy traction control (Pr.01-49=3) during linear deceleration (no triggering of over-voltage stall prevention), you can enhance the output current by increasing the output voltage (V_{out}) to further suppress the regenerative DC bus voltage that is prompt to rise. Using this function with Pr.06-02=1 (Smart Over-voltage Stall Prevention) can achieve a smoother and faster deceleration.

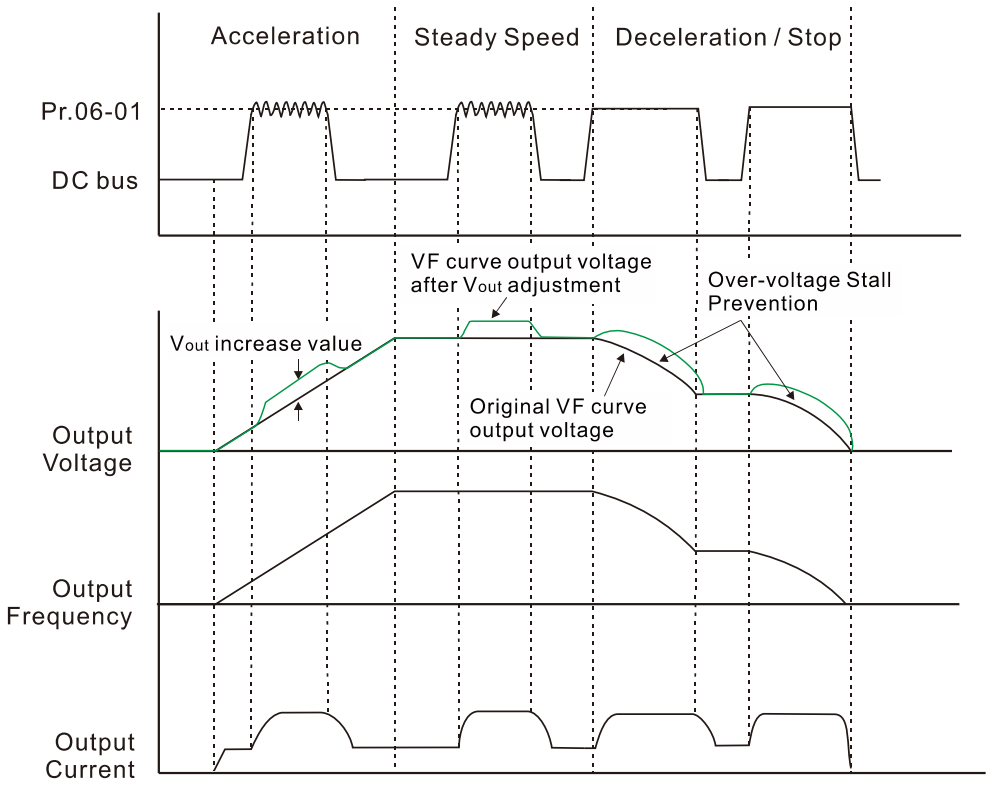

- Electromagnetic energy traction control activates in the following three conditions:
  1. Activates when DC bus is larger than the over-voltage stall prevention level (Pr.06-01) during acceleration and deactivates once Pr.06-01 is disabled.

2. Activates when DC bus is larger than the over-voltage stall prevention level (Pr.06-01) during steady operation and deactivates once Pr.06-01 is disabled.
3. Activates during deceleration (including stop) and deactivates once acceleration occurs or deceleration is stopped.

📖 When Pr.01-49=3, Pr.06-02=1 (Smart Over-voltage Stall Prevention) is automatically set to increase the stability during deceleration.

📖 Related parameters: Pr.12-08, Pr.12-09, Pr.12-10

12-08 Deviation Value of TEC Action Level

Default: 15.0

Settings 0.0–120.0 V

📖 When the regenerative energy restriction is set as Traction Energy Control (TEC) (Pr.01-49 = 2), and the DC bus reaches the over-voltage stall prevention (Pr.06-01) minus the deviation value of TEC action level (Pr.12-08), the regenerative energy restriction activates. Use Pr.12-08 to control the action level of this function.

12-09 Deviation Value of TEC Stop

Default: 15.0

Settings 0.0–120.0 V

📖 When the regenerative energy restriction activates, and the DC bus reaches the start-up level minus the deviation value of TEC stop (Pr.12-09), the regenerative energy restriction stops. Use Pr.12-09 to control the stop level of this function.

12-10 TEC Voltage Compensation Filter Time

Default: 1.000

Settings 0.000–65.535 sec.

📖 Adjust the output voltage filter time of the regenerative energy restriction.

01-50 Electromagnetic Traction Energy Consumption Coefficient

Default: 0.50

Settings 0.00–5.00 Hz

📖 During acceleration / steady speed / deceleration, the drive will dynamically adjust the output voltage based on the DC bus voltage level in order to prevent the drive from tripping on over-voltage. The output voltage is adjusted based on this parameter setting.

📖 The drive's output current and the efficiency of regenerative energy consumption increase when Pr.01-50 is increased. When Pr.01-50 is decreased, also the drive's output current and the efficiency of regenerative energy consumption will decrease.

📖 When setting Pr.01-50, pay attention to the drive’s output current. The drive’s output current must be lower than 80% of the motor’s rated current to prevent the motor from overheating.

01-51 Flux-weakening Overload Stall Prevention Time

Default: 1.00

Settings 0.00–600.00 sec.

- The parameter is valid only when the speed control mode is SynRM sensorless control (Pr.00-11=8).
- When the motor drive operates in flux-weakening region and the load of the motor driven by the motor drive suddenly increases, and cause the motor to slow down, you can adjust the parameter if the speed of motor oscillates or OC error occurs.

02 Digital Input / Output Parameter

✎ You can set this parameter during operation.

02-00 Two-wire / Three-wire Operation Control

Default: 0

Settings
0: Two-wire mode 1, power on for operation control
1: Two-wire mode 2, power on for operation control
2: Three-wire, power on for operation control
7: Single-wire mode, the Servo ON terminal under position control mode (only the FWD terminal is valid)

This parameter sets the configuration of the terminals (Pr.00-21=1 or Pr.00-31=1) which control the operation. There are four different control modes listed in the following table.

Pr.02-00	Control Circuits of the External Terminal
Setting value: 0 Two-wire operation control FWD / STOP REV / STOP	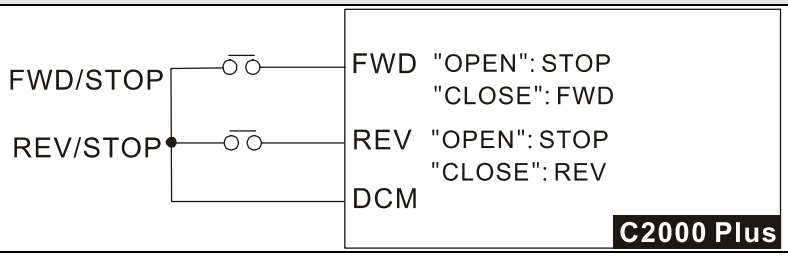
Setting value: 1 Two-wire operation control RUN/STOP REV/FWD	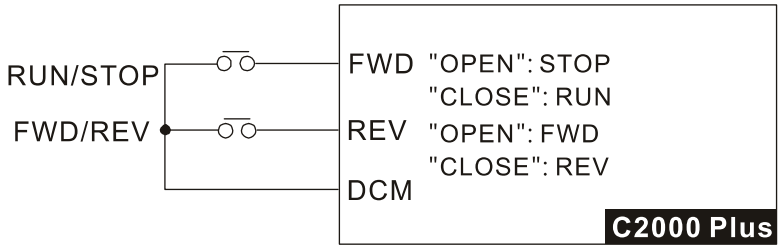
Setting value: 2 Three-wire operation control	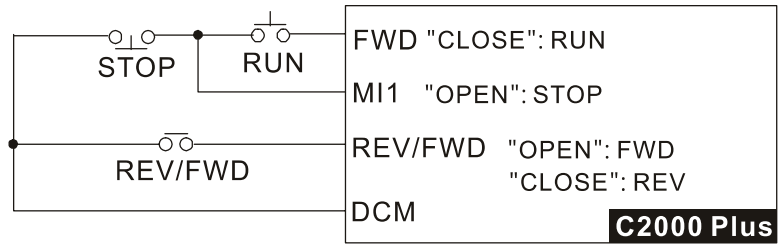
Setting value: 7 Single-wire operation control	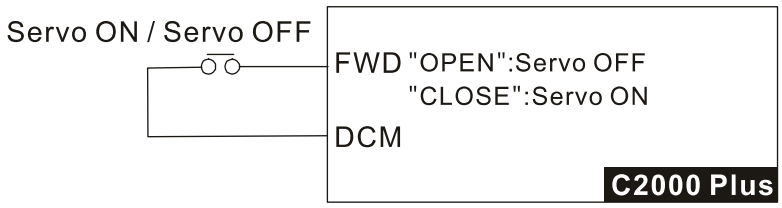

02-01 Multi-function Input Command 1 (MI1)

Default: 1

02-02 Multi-function Input Command 2 (MI2)

Default: 2

02-03 Multi-function Input Command 3 (MI3)

Default: 3

02-04	Multi-function Input Command 4 (MI4)

Default: 4

02-05	Multi-function Input Command 5 (MI5)
02-06	Multi-function Input Command 6 (MI6)
02-07	Multi-function Input Command 7 (MI7)
02-08	Multi-function Input Command 8 (MI8)
02-26	Input terminal of I/O extension card (MI10)
02-27	Input terminal of I/O extension card (MI11)
02-28	Input terminal of I/O extension card (MI12)
02-29	Input terminal of I/O extension card (MI13)
02-30	Input terminal of I/O extension card (MI14)
02-31	Input terminal of I/O extension card (MI15)

Default: 0

Settings

0: No function

1: Multi-step speed command 1 / P2P position command 1

2: Multi-step speed command 2 / P2P position command 2

3: Multi-step speed command 3 / P2P position command 3

4: Multi-step speed command 4 / P2P position command 4

5: Reset

6: JOG operation [by external control or KPC-CC01 (optional)]

7: Acceleration / deceleration speed inhibit

8: 1st, 2nd acceleration / deceleration time selection

9: 3rd, 4th acceleration / deceleration time selection

10: External Fault (EF) input (Pr.07-20)

11: Base Block (B.B) input from external

12: Output voltage stops

13: Cancel the setting of auto-acceleration / auto-deceleration time

14: Switch between motor 1 and motor 2

15: Rotating speed command from AVI

16: Rotating speed command from ACI

17: Rotating speed command from AUI

18: Forced to stop (Pr.07-20)

19: Frequency up command

20: Frequency down command

21: PID function disabled

22: Clear the counter

23: Input the counter value (MI6)

24: FWD JOG command

25: REV JOG command

26: TQC / FOC mode selection

27: ASR1 / ASR2 selection
28: Emergency stop (EF1)
29: Signal confirmation for Y-connection
30: Signal confirmation for Δ-connection
31: High torque bias (Pr.11-30)
32: Middle torque bias (Pr.11-31)
33: Low torque bias (Pr.11-32)
35: Enable single-point positioning
36: Enable P2P position teaching function
37: Enable pulse-train position command position control
38: Disable write EEPROM function
39: Torque command direction
40: Force coasting to stop
41: HAND switch
42: AUTO switch
43: Enable resolution selection (Pr.02-48)
44: Negative limit switch (NL)
45: Positive limit switch (PL)
46: Homing (ORG)
47: Enable homing function
48: Mechanical gear ratio switch
49: Enable drive
50: Slave dEb action to execute
51: Selection for PLC mode bit 0
52: Selection for PLC mode bit 1
53: Trigger CANopen quick stop
55: Brake release
56: Local / Remote Selection
88: P2P position confirm
89: Speed / position control mode switch
  0: Speed control mode
  1: Position control mode
90: Position command source switch
  0: Inputs from internal register
  1: Inputs from external pulse

📖 This parameter selects the functions for each multi-function terminal.

📖 Pr.02-26–Pr.02-31 are entity input terminals only when extension cards are installed; otherwise, these are virtual terminals. For example, when using the multi-function extension card EMC-D42A, Pr.02-26–Pr.02-29 are defined as the corresponded parameters for MI10–MI13. In this case, Pr.02-30–Pr.02-31 are virtual terminals.

📖 When Pr.02-12 is defined as virtual terminal, use digital keypad KPC-CC01 or communication method to change its status (0: ON; 1: OFF) of bit 8–15.

🕮 If Pr.02-00 is set to three-wire operation control, terminal MI1 is for the STOP contact. The function set previously for this terminal is automatically invalid.

Summary of function settings

Take the normally opened contact (N.O.) for example, ON: contact is closed, OFF: contact is open

Settings	Functions	Descriptions
0	No Function	
1	Multi-step speed command 1 / P2P position command 1	You can set 15 steps of speed or 15 positions with the digital status of these four terminals. You can use 16-steps of speed if you include the master speed when setting as 15 steps of speed (refer to Parameter Group 04 Multi-step Speed Parameters).
2	Multi-step speed command 2 / P2P position command 2	
3	Multi-step speed command 3 / P2P position command 3	
4	Multi-step speed command 4/ P2P position command 4	
5	Reset	Use this terminal to reset the drive after clearing a drive fault.
6	JOG operation [by external control or KPC-CC01 (optional)]	This function is valid when the source of the operation command is the external terminals. The JOG operation executes when the drive stops completely. While running, you can still change the operation direction, and the STOP key on the keypad* and the STOP command from communications are valid. Once the external terminal receives the OFF command, the motor stops in the JOG deceleration time. Refer to Pr.01-20–Pr.01-22 for details. *: This function is valid when Pr.00-32 is set to 1. 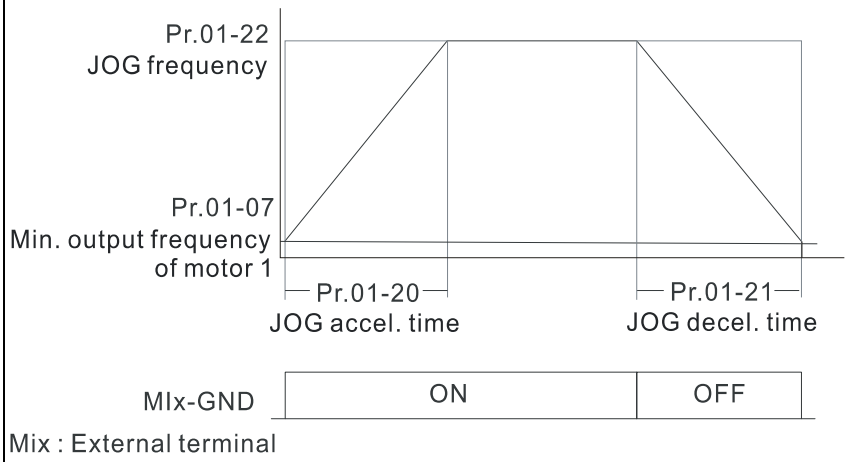

Settings	Functions	Descriptions
7	Acceleration / deceleration speed inhibit	When you enable this function, the drive stops acceleration or deceleration immediately. After you disable this function, the AC motor drive starts to accelerate or decelerate from the inhibit point. 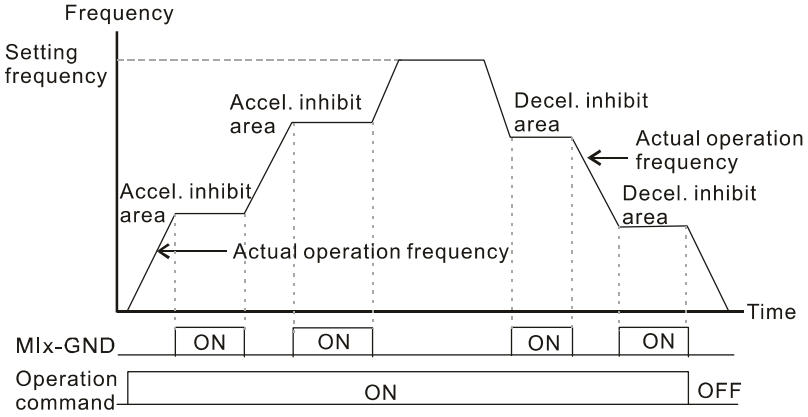
8	1st and 2nd acceleration / deceleration time selection	You can select the acceleration and deceleration time of the drive with this function, or from the digital status of the terminals; there are four acceleration and deceleration selections.
9	3rd and 4th acceleration / deceleration time selection	
10	External Fault (EF) Input	For external fault input, the drive decelerates according to the Pr.07-20 setting, and the keypad shows “EF” (it shows the fault record when an external fault occurs). The drive keeps running until the fault is cleared (terminal status restored) after RESET.
11	Base block (B.B.) input from external	ON: the output of the drive stops immediately. The motor is in free run and the keypad displays the B.B. signal. Refer to Pr.07-08 for details.
12	Output voltage stops	ON: the output of the drive stops immediately and the motor is in free run status. The drive is in output waiting status until the switch is turned to OFF, and then the drive restarts and runs to the current setting frequency. 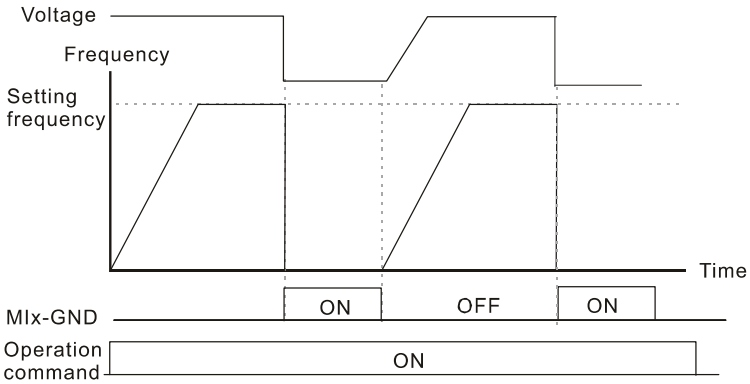

Settings	Functions	Descriptions
13	Cancel the setting of auto-acceleration / auto-deceleration time	Set Pr.01-44 to one of the 01–04 setting modes before using this function. When this function is enabled, OFF is for auto mode and ON is for linear acceleration / deceleration.
14	Switch between motor 1 and motor 2	ON: use parameters for motor 2 OFF: use parameters for motor 1
15	Rotating speed command form AVI	ON: force the source of the drive's frequency to be AVI. If the rotating speed commands are set to AVI, ACI and AUI at the same time, the priority is AVI > ACI > AUI.
16	Rotating speed command form ACI	ON: force the source of the drive's frequency to be ACI. If the rotating speed commands are set to AVI, ACI and AVI at the same time, the priority is AVI > ACI.> AUI
17	Rotating speed command form AUI	ON: force the source of the drive's frequency to be AUI. If the rotating speed commands are set to AVI, ACI and AVI at the same time, the priority is AVI > ACI.> AUI
18	Forced to Stop (Pr.07-20)	ON: the drive ramps to stop according to the Pr.07-20 setting.
19	Frequency up command	ON: the frequency of the drive increases or decreases by one unit. If this function remains ON continuously, the frequency increases or decreases according to Pr.02-09 / Pr.02-10. The Frequency command returns to zero when the drive stops and the displayed frequency is 0.00 Hz. If you select Pr.11-00, bit 7 = 1, the frequency is not saved.
20	Frequency down command	
21	PID function disabled	ON: the PID function is disabled.
22	Clear the counter	ON: the current counter value is cleared and displays 0. The drive counts up when this function is disabled.
23	Input the counter value (MI6)	On: the counter value increases by one. Use the function with Pr.02-19.
24	FWD JOG command	This function is valid when the source of the operation command is external terminal. ON: the drive executes forward JOG. When executing the JOG command in torque mode, the drive automatically switches to speed mode. The drive returns to torque mode after the JOG command is complete.
25	REV JOG command	This function is valid when the source of the operation command is external terminal. ON: the drive executes reverse JOG. When executing the JOG command in torque mode, the drive automatically switches to speed mode. The drive returns to torque mode after the JOG command is complete.

Settings	Functions	Descriptions
26	TQC / FOC mode selection	ON: TQC mode. OFF: FOC mode. 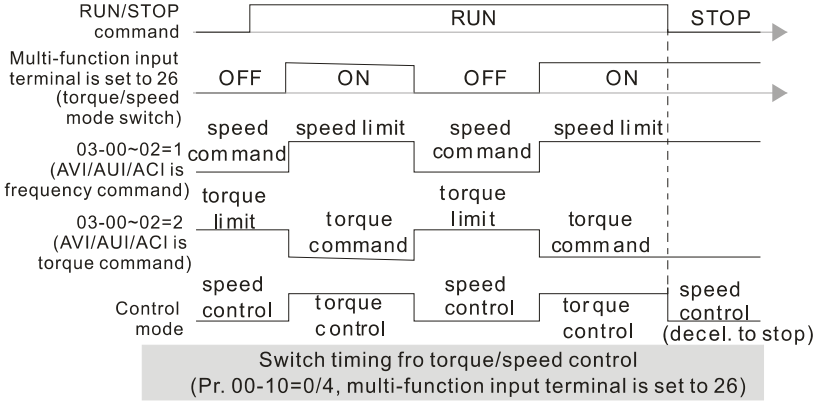
27	ASR1 / ASR2 selection	ON: the speed is adjusted by the ASR 2 setting. OFF: the speed is adjusted by the ASR 1 setting. Refer to Pr.11-02 for details.
28	Emergency stop (EF1)	ON: the output of the drive stops immediately, displays “EF1” on the keypad, and the motor is in free run status. The drive keeps running until the fault is cleared after you press RESET on the keypad (EF: External Fault). 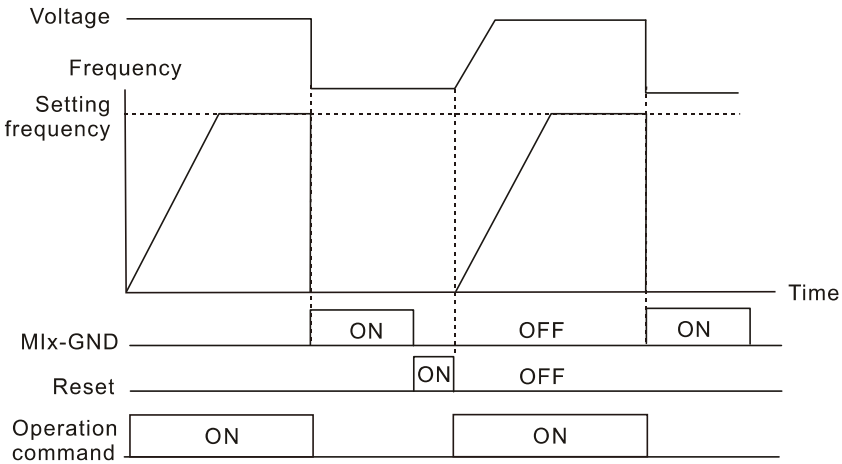
29	Signal confirmation for Y-connection	When the control mode is V/F, ON: the drive operates by the first V/F.
30	Signal confirmation for Δ-connection	When the control mode is V/F, ON: the drive operates by the second V/F.
31	High torque bias	Refer to Pr.11-30–Pr.11-32 for details.
32	Middle torque bias	
33	Low torque bias	
35	Enable single-point positioning	ON: the AC motor drive executes the single-point positioning according to Pr.11-65 (single-point positioning position high byte) and Pr.11-66 (single-point positioning position low byte). This function is valid only for IMFOCPG and PMFOCPG control modes.

Settings	Functions	Descriptions
		1. MI=35 (enable single-point positioning), MO=39 (position reached), Pr.10-01=1024 (encoder PPR), Pr.11-65=0 and Pr.11-66=0 In speed control mode (Pr.00-10=0), activate MI=35 (enable single-point positioning), the motor is positioned according to Pr.11-65 and Pr.11-66 settings. See the diagram below: 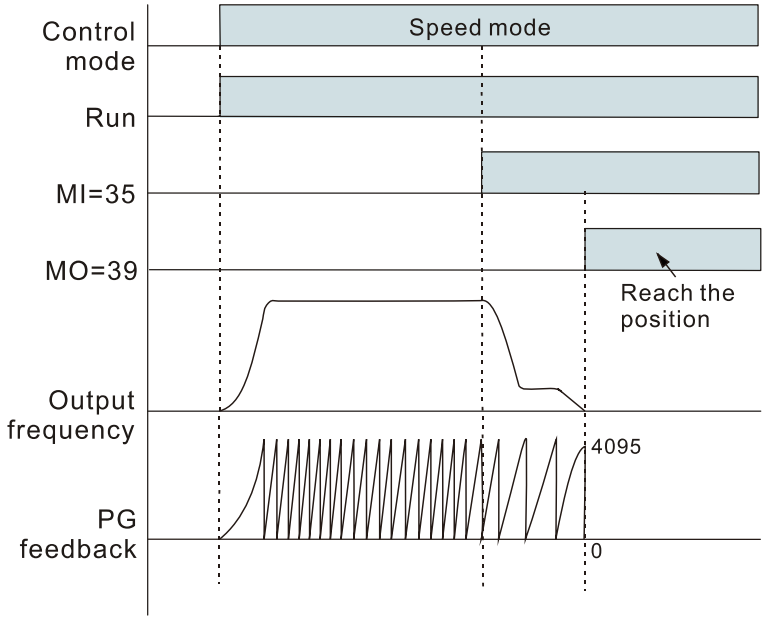 2. MI=35 (enable single-point positioning), MO=39 (position reached), Pr.10-01=1024 (encoder PPR), Pr.11-65=0 and Pr.11-66=3072 In position control mode (Pr.00-10=1), activate MI=35 (enable single-point positioning), the motor runs from the current single revolution position to Pr.11-65 and Pr.11-66 setting positions and the moving position does not exceed one revolution if single revolution coordinate system is finished. See the diagram below: 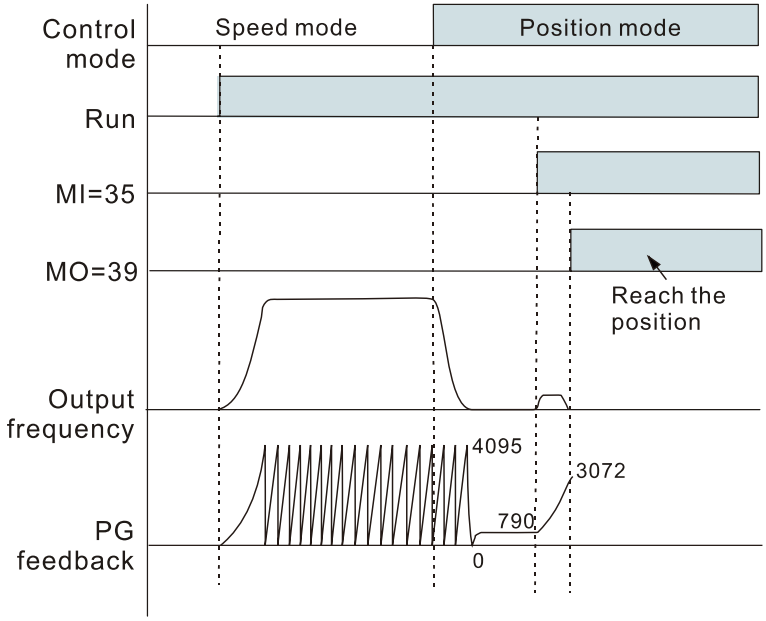

Settings	Functions	Descriptions
		3. MI=35 (enable single-point positioning), MO=39 (position reached), Pr.10-01=1024 (encoder PPR), Pr.11-65=0 and Pr.11-66=0 In position control mode (Pr.00-10=1), activate MI=35 (enable single-point positioning), the motor runs through the z-phase to finish single revolution coordinate system before executing single-point positioning function if single revolution coordinate system is not finished. See the diagram below: 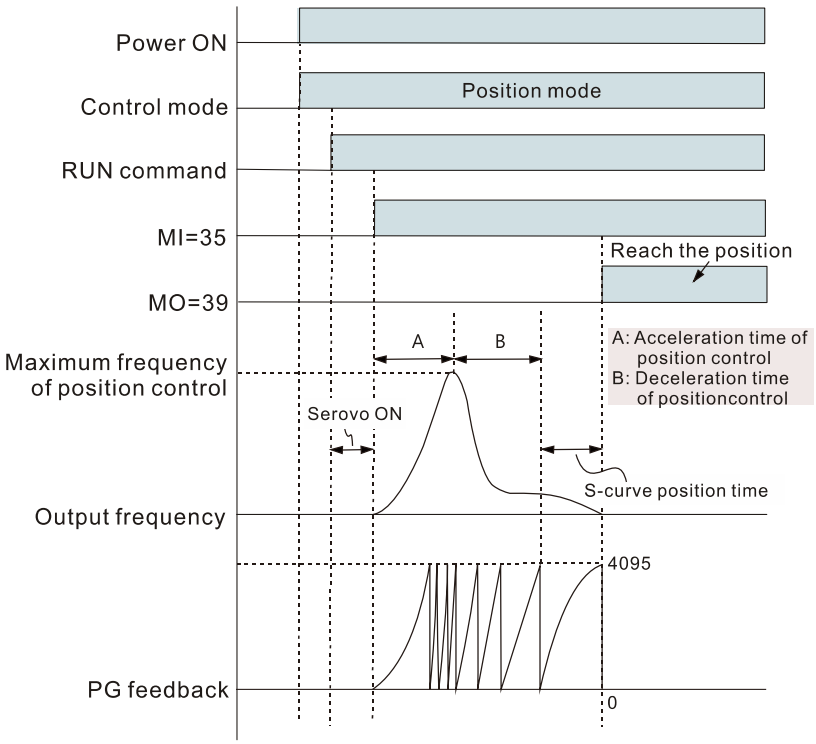
36	Enable P2P position teaching function	P2P position teaching function can execute no matter the motor drive is RUN or STOP. ON / OFF: the drive determines the corresponding P2P positions according to MI1–MI4 ON / OFF status, and the motor's current positions are written into these corresponding P2P positions..

Settings	Functions	Descriptions
		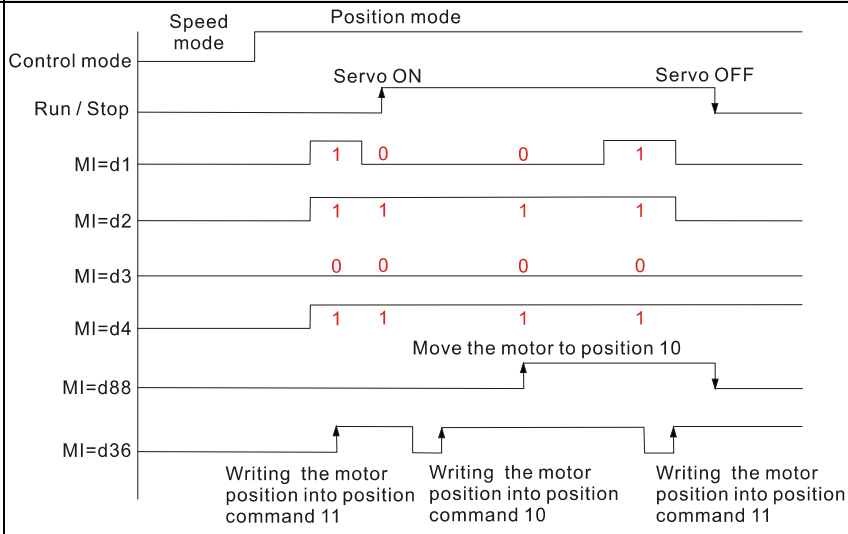
37	Enable pulse-train command position command	ON: The drive automatically switches to position mode and the position command source is pulse-train input. 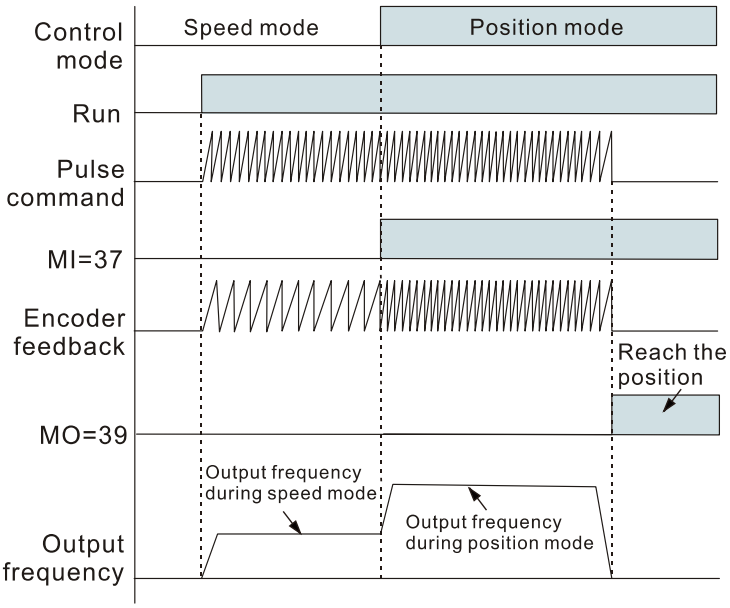
38	Disable writing EEPROM function (parameters memory disable)	ON: writing to EEPROM is disabled. Changed parameters are not saved after power off.
39	Torque command direction	For torque control (Pr.00-10=2), when the torque command is AVI or ACI, ON: negative torque.
40	Force coasting to stop	ON: during operation, the motor coasts to stop.

<table>
<tr><th>Settings</th><th>Functions</th><th>Descriptions</th></tr>
<tr><td>41</td><td>HAND switch</td><td rowspan="2">1. When the MI terminal switches to OFF, it executes a STOP command. Therefore, if the MI terminal switches to OFF during operation, the drive stops.
2. Use the optional keypad KPC-CC01 to switch between HAND and AUTO. The drive stops first, and then switches to HAND or AUTO status.
3. The optional digital keypad KPC-CC01 displays the current status of the drive (HAND / OFF / AUTO).
<table>
<tr><th></th><th>bit1</th><th>bit0</th></tr>
<tr><td>OFF</td><td>0</td><td>0</td></tr>
<tr><td>AUTO</td><td>0</td><td>1</td></tr>
<tr><td>HAND</td><td>1</td><td>0</td></tr>
<tr><td>OFF</td><td>1</td><td>1</td></tr>
</table></td></tr>
<tr><td>42</td><td>AUTO switch</td></tr>
<tr><td>43</td><td>Enable resolution selection</td><td>Refer to Pr.02-48 for details.</td></tr>
<tr><td>44</td><td>Negative limit switch (NL)</td><td>Signal input for negative limit switch (NL).
ON: The drive executes homing based on Pr.11-68–Pr.11-74 settings.</td></tr>
<tr><td>45</td><td>Positive limit switch (PL)</td><td>Signal input for positive limit switch (PL).
ON: The drive executes homing based on Pr.11-68–Pr.11-74 settings.</td></tr>
<tr><td>46</td><td>Homing (ORG)</td><td>Origin point input.
ON: The drive executes homing based on Pr.11-68–Pr.11-74 settings.</td></tr>
<tr><td>47</td><td>Enable homing function</td><td>When this terminal is active in position control mode (Pr.00-10=1), the drive executes homing based on Pr.11-68–Pr.11-74 settings.</td></tr>
<tr><td>48</td><td>Mechanical gear ratio switch</td><td>ON: The mechanical gear ratio switches to the second set of settings (refer to Pr.10-04–Pr.10-07).
OFF: Pr.10-04 and Pr.10-05 (the first set of settings)
ON: Pr.10-06 and Pr.10-07 (the second set of settings)</td></tr>
<tr><td>49</td><td>Enable drive</td><td>When the drive is enabled, the RUN command is valid.
When the drive is disabled, the RUN command is invalid.
When the drive is operating, the motor coasts to stop.
This function varies with MOx=45.</td></tr>
<tr><td>50</td><td>Slave dEb action to execute</td><td>Enter the message setting in this parameter when the master triggers dEb. This ensures that the slave also triggers dEb, then the master and slave stop simultaneously.</td></tr>
</table>

<table>
<tr><th>Settings</th><th>Functions</th><th>Descriptions</th></tr>
<tr><td>51</td><td>Selection for PLC mode (bit 0)</td><td rowspan="2">
<table>
<tr><td>PLC status</td><td>bit1</td><td>bit0</td></tr>
<tr><td>Disable PLC function (PLC 0)</td><td>0</td><td>0</td></tr>
<tr><td>Trigger PLC to operation (PLC 1)</td><td>0</td><td>1</td></tr>
<tr><td>Trigger PLC to stop (PLC 2)</td><td>1</td><td>0</td></tr>
<tr><td>No function</td><td>1</td><td>1</td></tr>
</table>
</td></tr>
<tr><td>52</td><td>Selection for PLC mode (bit 1)</td></tr>
<tr><td>53</td><td>Trigger CANopen quick stop</td><td>When this function is enabled under CANopen control, it changes to Quick Stop. Refer to Chapter 15 CANopen overview for more details.</td></tr>
<tr><td>55</td><td>Brake release</td><td>When Pr.02-56 ≠ 0, connect the brake release signal to multi-function input terminals. When the brake is opened, and the drive does not receive its confirming signal, the Brk error occurs.</td></tr>
<tr><td>56</td><td>Local / Remote selection</td><td>Use Pr.00-29 to select for LOCAL / REMOTE mode (refer to Pr.00-29). When Pr.00-29 is not set to 0, the digital keypad KPC-CC01 displays the LOC / REM status. (KPC-CC01 firmware version 1.021 and above).
<table>
<tr><td></td><td>bit0</td></tr>
<tr><td>REM</td><td>0</td></tr>
<tr><td>LOC</td><td>1</td></tr>
</table>
</td></tr>
<tr><td>88</td><td>P2P position command confirm</td><td>When the terminal is active and the drive is in Servo ON status under the position control mode (Pr.00-10=1), the drive determines the corresponding P2P positions according to MI1–MI4 ON/OFF status, and the motor moves to that corresponding position.
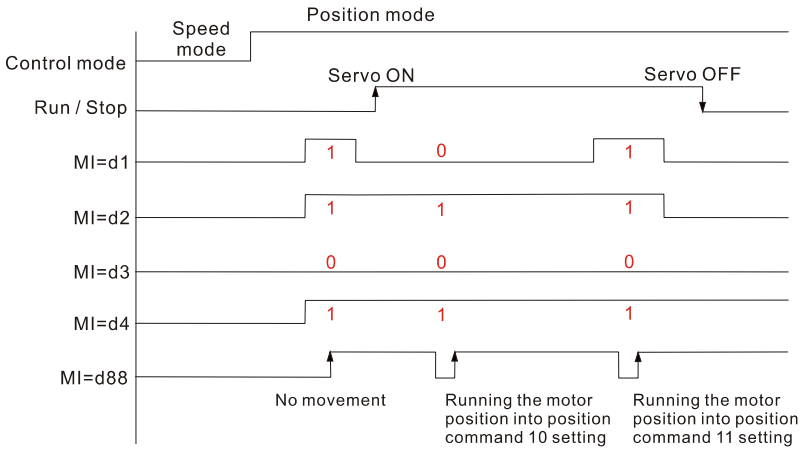

1. When the drive starts, the P2P position commands (MIx=1–4) are simply to switch between multiple positions, which does not make the motor run. To make the motor move to the corresponding point-to-point position, set and activate the multi-function input terminal MI=88 (P2P position command confirmation).
2. The route planning immediately changes once there is any change in P2P position, speed or acceleration/deceleration</td></tr>
</table>

<table>
<tr><th>Settings</th><th>Functions</th><th>Descriptions</th></tr>
<tr><td></td><td></td><td>time in the process of moving to the targeted position.
(1) Each of the multi-function input terminals (MI1–MI15) can be used for the P2P positioning position control function. However, a maximum of four terminals, using a binary 4-bit, can be used at the same time to switch between 15 positions.
<table>
<tr><th>P2P position</th><th>P2P position command 4</th><th>P2P position command 3</th><th>P2P position command 2</th><th>P2P position command 1</th></tr>
<tr><td>0 (Disabled)</td><td>OFF</td><td>OFF</td><td>OFF</td><td>OFF</td></tr>
<tr><td>1</td><td>OFF</td><td>OFF</td><td>OFF</td><td>ON</td></tr>
<tr><td>2</td><td>OFF</td><td>OFF</td><td>ON</td><td>OFF</td></tr>
<tr><td>3</td><td>OFF</td><td>OFF</td><td>ON</td><td>ON</td></tr>
<tr><td>4</td><td>OFF</td><td>ON</td><td>OFF</td><td>OFF</td></tr>
<tr><td>5</td><td>OFF</td><td>ON</td><td>OFF</td><td>ON</td></tr>
<tr><td>6</td><td>OFF</td><td>ON</td><td>ON</td><td>OFF</td></tr>
<tr><td>7</td><td>OFF</td><td>ON</td><td>ON</td><td>ON</td></tr>
<tr><td>8</td><td>ON</td><td>OFF</td><td>OFF</td><td>OFF</td></tr>
<tr><td>9</td><td>ON</td><td>OFF</td><td>OFF</td><td>ON</td></tr>
<tr><td>10</td><td>ON</td><td>OFF</td><td>ON</td><td>OFF</td></tr>
<tr><td>11</td><td>ON</td><td>OFF</td><td>ON</td><td>ON</td></tr>
<tr><td>12</td><td>ON</td><td>ON</td><td>OFF</td><td>OFF</td></tr>
<tr><td>13</td><td>ON</td><td>ON</td><td>OFF</td><td>ON</td></tr>
<tr><td>14</td><td>ON</td><td>ON</td><td>ON</td><td>OFF</td></tr>
<tr><td>15</td><td>ON</td><td>ON</td><td>ON</td><td>ON</td></tr>
</table>
(2) When MI=1–4 (P2P position command 1–4), the terminal is level-triggered.
(3) When MI=36 (enable P2P positioning teaching function), the terminal is edge-triggered.
(4) When MI=88 (P2P position command confirmation), the terminal is rising edge-triggered.</td></tr>
<tr><td>89</td><td>Speed / position control mode switch
0: Speed control mode
1: Position control mode</td><td>OFF: Speed mode
ON: Position control mode</td></tr>
<tr><td>90</td><td>Position command source switch
0: Inputs from internal register
1: Inputs from external pulse</td><td>Refer to Pr.11-40
OFF: Input from internal register
ON: Input from external pulse-train</td></tr>
</table>

02-09 UP / DOWN Key Mode

Default: 0

Settings 0: UP / DOWN by the acceleration / deceleration time
1: UP / DOWN constant speed (Pr.02-10)

02-10 Constant speed, Acceleration / Deceleration Speed of the UP/ DOWN Key

Default: 0.001

Settings 0.001~1.000 Hz/ms

- Use when the multi-function input terminals are set to 19, 20 (Frequency UP / DOWN command). The frequency increases or decreases according to Pr.02-09 and Pr.02-10.
- When Pr.11-00 bit 7=1, the frequency is not saved. The Frequency command returns to zero when the drive stops, and the displayed frequency is 0.00 Hz. At this time, increasing or decreasing the Frequency command (F) by using the UP or DOWN key is valid only when the drive is running.
- When Pr.02-09 is set to 0:
  The increasing or decreasing Frequency command (F) operates according to the setting for acceleration or deceleration time (refer to Pr.01-12–01-19).

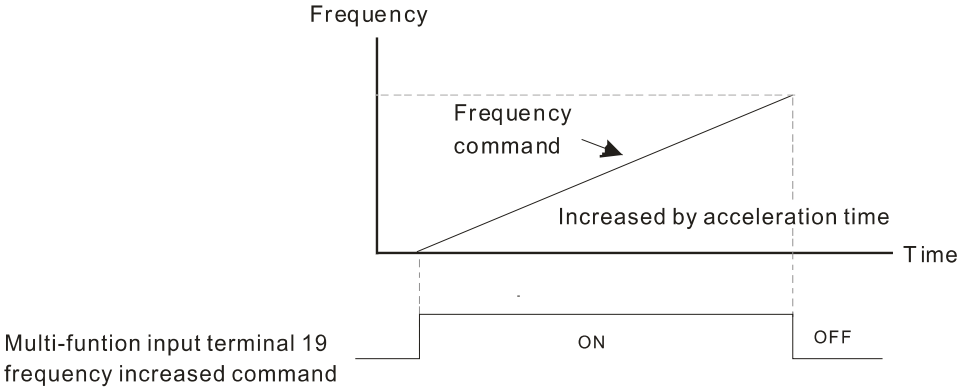

- When Pr.02-09 is set to 1:
  The increasing or decreasing Frequency command (F) operates according to the setting of Pr.02-10 (0.01–1.00 Hz/ms).

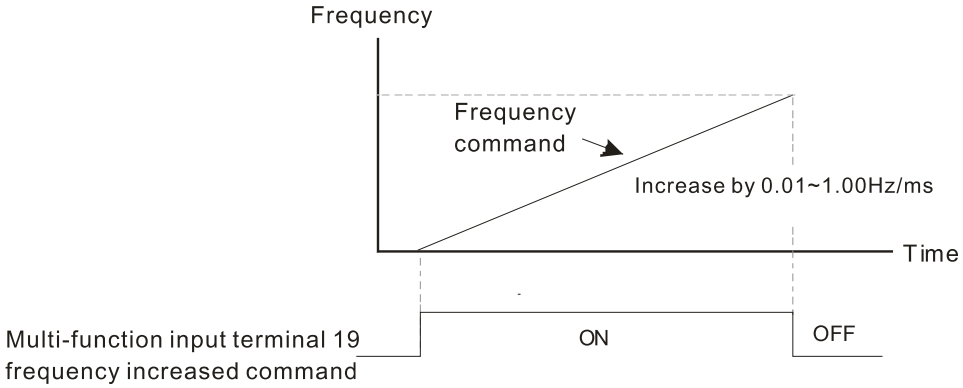

02-11 Multi-function Input Response Time

Default: 0.005

Settings 0.000~30.000 sec.

- Use this parameter to set the response time of the digital input terminals FWD, REV, and MI1–MI8.
- This function is to delay and confirm the digital input terminal signal. The time for delay is also the time for confirmation. The confirmation prevents interference that could cause error in the input to the digital terminals. But in the meanwhile, it delays the response time though confirmation improves accuracy.
- When using MI8 as encoder pulse feedback input, this parameter is be referred.

02-12 Multi-function Input Mode Selection

Default: 0000h

Settings 0000h~FFFFh (0: N.O. ; 1: N.C.)

- The parameter setting is in hexadecimal.
- This parameter sets the status of the multi-function input signal (0: normally open; 1: normally closed) and it is not affected by the status of SINK / SOURCE.
- bit2–bit15 correspond to MI1–MI14
- The default for bit 0 (MI1) is FWD terminal, and the default for bit 1 (MI2) is REV terminal. You cannot use this parameter to change the input mode when Pr.02-00 ≠ 0.
- You can change the terminal ON / OFF status through communications.
  For example: MI1 is set to 1 (multi-step speed command 1) and MI2 is set to 2 (multi-step speed command 2). Then the forward + second step speed command = $1001_2 = 9_{10}$.
  As long as Pr.02-12 = 9 is set through communications, there is no need to wire any multi-function terminal to run forward with the second step speed.

bit15	bit14	bit13	bit12	bit11	bit10	bit9	bit8	bit7	bit6	bit5	bit4	bit3	bit2	bit1	bit0
MI14	MI13	MI12	MI11	MI10	MI9	MI8	MI7	MI6	MI5	MI4	MI3	MI2	MI1		

- Use Pr.11-42 bit 1 to select whether FWD / REV terminal is controlled by Pr.02-12 bit 0 and bit 1.

02-13 Multi-function Output 1 (Relay1)

Default: 11

02-14 Multi-function Output 2 (Relay2)

Default: 1

02-16 Multi-function Output 3 (MO1)

Default: 66

02-17 Multi-function Output 4 (MO2)

02-36 Output terminal of I/O extension card (MO10) or (RA10)

02-37 Output terminal of I/O extension card (MO11) or (RA11)

02-38 Output terminal of I/O extension card (RA12)

02-39 Output terminal of I/O extension card (RA13)

02-40 Output terminal of I/O extension card (RA14)

02-41 Output terminal of I/O extension card (RA15)

02-42 Output terminal of I/O extension card (MO16 virtual terminal)

02-43 Output terminal of I/O extension card (MO17 virtual terminal)

02-44 Output terminal of I/O extension card (MO18 virtual terminal)

02-45 Output terminal of I/O extension card (MO19 virtual terminal)

02-46 Output terminal of I/O extension card (MO20 virtual terminal)

Default: 0

Settings

0: No function

1: Indication during RUN

2: Operation speed reached
3: Desired frequency reached 1 (Pr.02-22)
4: Desired frequency reached 2 (Pr.02-24)
5: Zero speed (Frequency command)
6: Zero speed including STOP (Frequency command)
7: Over-torque 1 (Pr.06-06–06-08)
8: Over-torque 2 (Pr.06-09–06-11)
9: Drive is ready
10: Low voltage warning (Lv) (Pr.06-00)
11: Malfunction indication
12: Mechanical brake release (Pr.02-32)
13: Overheat warning (Pr.06-15)
14: Software brake signal indication (Pr.07-00)
15: PID feedback error (Pr.08-13, Pr.08-14)
16: Slip error (oSL)
17: Count value reached, does not return to 0 (Pr.02-20)
18: Count value reached, returns to 0 (Pr.02-19)
19: External interrupt B.B. input (Base Block)
20: Warning output
21: Over-voltage
22: Over-current stall prevention
23: Over-voltage stall prevention
24: Operation source
25: Forward command
26: Reverse command
27: Output when current ≥ Pr.02-33
28: Output when current < Pr.02-33
29: Output when frequency ≥ Pr.02-34
30: Output when frequency < Pr.02-34
31: Y-connection for the motor coil
32: Δ-connection for the motor coil
33: Zero speed (actual output frequency)
34: Zero speed including stop (actual output frequency)
35: Error output selection 1 (Pr.06-23)
36: Error output selection 2 (Pr.06-24)
37: Error output selection 3 (Pr.06-25)
38: Error output selection 4 (Pr.06-26)
39: Position reached (Pr.11-65, Pr.11-66)
40: Speed reached (including Stop)
42: Crane function
43: Motor actual speed detection
44: Low current output (use with Pr.06-71–Pr.06-73)

45: UVW output electromagnetic valve switch
46: Master dEb output
47: Closed brake output
49: Homing action complete output
50: Output control for CANopen
51: Analog output control for RS-485 (InnerCOM / Modbus)
52: Output control for communication cards
65: Output control for both CAN & 485
66: SO output logic A
67: Analog input level reached
68: SO output logic B
70: FAN warning detection output
75: Forward running status
76: Reverse running status

- Use this parameter to set the function of multi-function terminals.
- Pr.02-36–Pr.02-41 requires additional extension cards to display the parameters, the choices of optional cards are EMC-D42A and EMC-R6AA.
- The optional card EMC-D42A provides two output terminals, use with Pr.02-36–Pr.02-37.
- The optional card EMC-R6AA provides six output terminals, use with Pr.02-36–Pr.02-41.

Summary of function settings
Take the normally open contact (N.O.) for example, ON: contact is closed, OFF: contact is open

Settings	Functions	Descriptions
0	No Function	
1	Indication during RUN	Activates when the drive is not in STOP.
2	Operation speed reached	Activates when output frequency of the drive reaches the setting frequency.
3	Desired Frequency reached 1 (Pr.02-22)	Activates when the desired frequency (Pr.02-22) is reached
4	Desired Frequency reached 2 (Pr.02-24)	Activates when the desired frequency (Pr.02-24) is reached.
5	Zero Speed (frequency command)	Activates when frequency command =0 (the drive must be in RUN status)
6	Zero speed, including STOP (Frequency command)	Activates when frequency command =0 or stopped.
7	Over-torque 1	Activates when the drive detects over-torque. Pr.06-07 sets the over-torque detection level (motor 1), and Pr.06-08 sets the over-torque detection time (motor 1). Refer to Pr.06-06–06-08.
8	Over-torque 2	Activates when the drive detects over-torque. Pr.06-10 sets the over-torque detection level (motor 2), and Pr.06-11 sets the over-torque detection time (motor 2).

Settings	Functions	Descriptions
		Refer to Pr.06-09–06-11.
9	Drive is ready	Activates when the drive is ON and with no error detected.
10	Low voltage warning (Lv)	Activates when the DC bus voltage is too low. (refer to Pr.06-00 Low Voltage Level)
11	Malfunction indication	Activates when fault occurs (except Lv stop).
12	Mechanical brake release (Pr.02-32)	Activates when the drive runs after the set delayed time for Pr.02-32. This function must be used with DC brake function.
13	Overheat warning	Activates when IGBT or heat sink overheats; to prevent the drive from shutting down due to over-heating (refer to Pr.06-15).
14	Software brake signal indication	Activates when the soft brake function is ON. (refer to Pr.07-00)
15	PID feedback error	Activates when the PID feedback signal error is detected.
16	Slip error (oSL)	Activates when the slip error is detected.
17	Count value reached, does not return to 0 (Pr.02-20)	Activates when the drive executes external counter, this contact is active if the count value is equal to the setting value for Pr.02-20. This contact is not active when the setting value for Pr.02-20 > Pr.02-19.
18	Count value reached, returns to 0 (Pr.02-19)	Activates when the drive executes the external counter, this contact is active if the count value is equal to the setting value for Pr.02-19.
19	External interrupt B.B. input (Base Block)	Activates when external interrupt (B.B.) stop output occurs in the drive.
20	Warning output	Activates when a warning is detected.
21	Over-voltage	Activates when over-voltage is detected. (Refer to chapter 14 for the action level of over-voltage)
22	Over-current stall prevention	Activates when over-current stall prevention is detected.
23	Over-voltage stall prevention	Activates when over-voltage stall prevention is detected.
24	Operation source	Activates when the operation command is not controlled by external terminal. (Pr.00-21≠0)
25	Forward Command	Activates when the operation direction is forward.
26	Reverse Command	Activates when the operation direction is reverse.
27	Output when current ≥ Pr.02-33	Activates when current is ≥ Pr.02-33.
28	Output when current < Pr.02-33	Activates when current is < Pr.02-33
29	Output when frequency ≥ Pr.02-34	Activates when frequency is ≥ Pr.02-34.

Settings	Functions	Descriptions
30	Output when frequency < Pr.02-34	Activates when frequency is < Pr.02-34.
31	Y-connection for the motor coil	Activates when Pr.05-24=1, when frequency output is lower than Pr.05-23 minus 2 Hz, and the time is longer than Pr.05-25.
32	Δ-connection for the motor coil	Activates when Pr.05-24=1, when frequency output is higher than Pr.05-23 plus 2 Hz, and the time is longer than Pr.05-25.
33	Zero speed (actual output frequency)	Activates when the actual output frequency is 0. (the drive is in RUN mode)
34	Zero speed including stop (actual output frequency)	Activates when the actual output frequency is 0 or stopped.
35	Error output selection 1 (Pr.06-23)	Activates when Pr.06-23 is ON.
36	Error output selection 2 (Pr.06-24)	Activates when Pr.06-24 is ON.
37	Error output selection 3 (Pr.06-25)	Activates when Pr.06-25 is ON.
38	Error output selection 4 (Pr.06-26)	Activates when Pr.06-26 is ON.
39	Position reached (Pr.11-65, Pr.11-66)	Activates when the ~~PG~~ position control point reaches Pr.11-65, Pr.11-66.
40	Speed reached (including speed)	Activates when the output frequency reaches the setting frequency or stopped.
42	Crane function	Use this function with Pr.02-32, Pr.02-33, Pr.02-34, Pr.02-57 and Pr.02-58. Refer to the crane function examples below.
43	Actual motor speed detection	Activates when motor actual speed is less than Pr.02-47.
44	Low current output	This function needs to be used with Pr.06-71–Pr.06-73
45	UVW output electromagnetic valve switch	Use this function with external terminal input = 49 (drive enabled) and external terminal output = 45 (electromagnetic valve enabled), and then the electromagnetic valve is ON or OFF according to the status of the drive.

Settings	Functions	Descriptions
		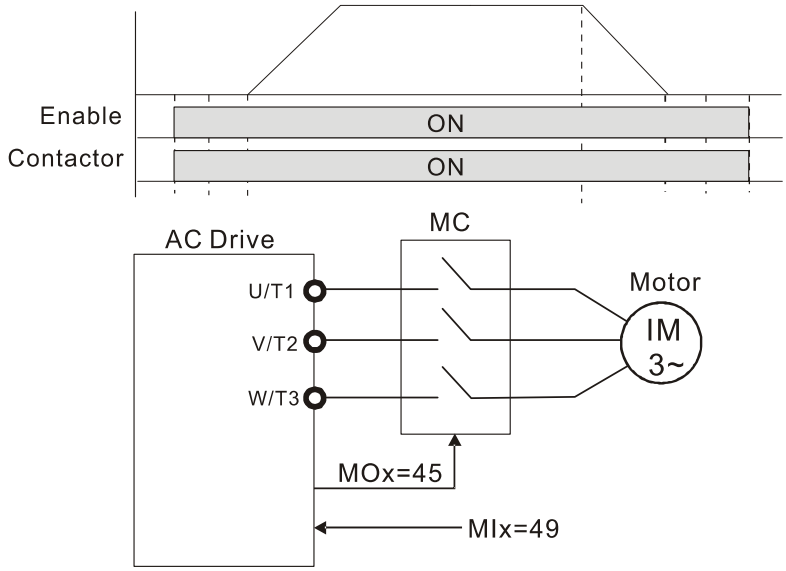
46	Master dEb output	When dEb rises at the master, MO sends a dEb signal to the slave. Output the message when the master triggers dEb. This ensures that the slave also triggers dEb. Then slave follows the deceleration time of the master to stop simultaneously with the master.
47	Closed brake output	When drive stops, and the frequency command < Pr.02-34, the contact of corresponding multi-function terminal is ON. The contact is OFF when the brake delay time exceeds Pr.02-32. 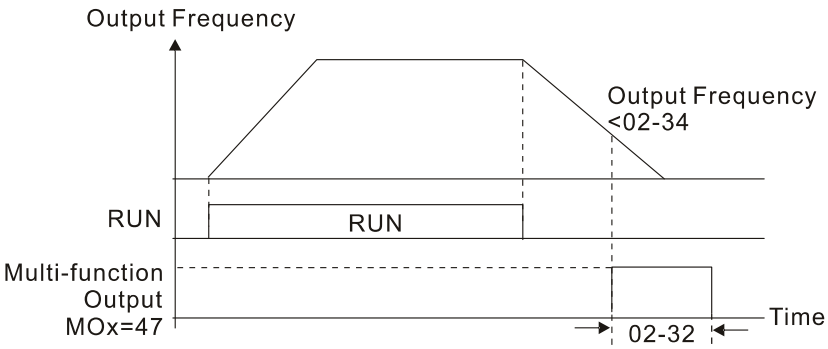
49	Homing action completed	Activates when homing action is completed.

<table>
<tr><th>Settings</th><th>Functions</th><th>Descriptions</th></tr>
<tr><td>50</td><td>Output control for CANopen</td><td>Control the multi-function output terminals through CANopen.
To control RY2, set Pr.02-14 = 50.
The mapping table of the CANopen DO is shown in the following table:
<table>
<tr><th>Physical terminal</th><th>Setting of related parameters</th><th>Attribute</th><th>Corresponding Index</th></tr>
<tr><td>RY1</td><td>Pr.02-13 = 50</td><td>RW</td><td>The bit0 at 2026-41</td></tr>
<tr><td>RY2</td><td>Pr.02-14 = 50</td><td>RW</td><td>The bit1 at 2026-41</td></tr>
<tr><td>MO1</td><td>Pr.02-16 = 50</td><td>RW</td><td>The bit3 at 2026-41</td></tr>
<tr><td>MO2</td><td>Pr.02-17 = 50</td><td>RW</td><td>The bit4 at 2026-41</td></tr>
<tr><td>MO10</td><td rowspan="2">Pr.02-36 = 50</td><td rowspan="2">RW</td><td>The bit5 at 2026-41</td></tr>
<tr><td>RY10</td><td>The bit5 at 2026-41</td></tr>
<tr><td>MO11</td><td rowspan="2">Pr.02-37 = 50</td><td rowspan="2">RW</td><td>The bit6 at 2026-41</td></tr>
<tr><td>RY11</td><td>The bit6 at 2026-41</td></tr>
<tr><td>RY12</td><td>Pr.02-38 = 50</td><td>RW</td><td>The bit7 at 2026-41</td></tr>
<tr><td>RY13</td><td>Pr.02-39 = 50</td><td>RW</td><td>The bit8 at 2026-41</td></tr>
<tr><td>RY14</td><td>Pr.02-40 = 50</td><td>RW</td><td>The bit9 at 2026-41</td></tr>
<tr><td>RY15</td><td>Pr.02-41 = 50</td><td>RW</td><td>The bit10 at 2026-41</td></tr>
</table>
Refer to Section 15-3-5 for more information.</td></tr>
<tr><td>51</td><td>Analog output control for RS-485 interface</td><td>For RS-485 interface (InnerCOM / Modbus) output.
<table>
<tr><th>Physical terminal</th><th>Setting of related parameters</th><th>Attribute</th><th>Corresponding Index</th></tr>
<tr><td>RY1</td><td>Pr.02-13 = 51</td><td>RW</td><td>bit0 at 2640H</td></tr>
<tr><td>RY2</td><td>Pr.02-14 = 51</td><td>RW</td><td>bit1 at 2640H</td></tr>
<tr><td>MO1</td><td>Pr.02-16 = 51</td><td>RW</td><td>bit3 at 2640H</td></tr>
<tr><td>MO2</td><td>Pr.02-17 = 51</td><td>RW</td><td>bit4 at 2640H</td></tr>
<tr><td>MO10 or RA10</td><td>Pr.02-36 = 51</td><td>RW</td><td>bit5 at 2640H</td></tr>
<tr><td>MO11 or RA11</td><td>Pr.02-37 = 51</td><td>RW</td><td>bit6 at 2640H</td></tr>
<tr><td>RA12</td><td>Pr.02-38 = 51</td><td>RW</td><td>bit7 at 2640H</td></tr>
<tr><td>RA13</td><td>Pr.02-39 = 51</td><td>RW</td><td>bit8 at 2640H</td></tr>
<tr><td>RA14</td><td>Pr.02-40 = 51</td><td>RW</td><td>bit9 at 2640H</td></tr>
<tr><td>RA15</td><td>Pr.02-41 = 51</td><td>RW</td><td>bit10 at 2640H</td></tr>
</table></td></tr>
<tr><td>52</td><td>Output control for communication cards</td><td>Control the output through communication cards (CMC-EIP01, CMC-PN01 and CMC-DN01)
<table>
<tr><th>Physical terminal</th><th>Setting of related parameters</th><th>Attribute</th><th>Corresponding Address</th></tr>
<tr><td>RY1</td><td>Pr.02-13 = 52</td><td>RW</td><td>The bit0 of 2640H</td></tr>
<tr><td>RY2</td><td>Pr.02-14 = 52</td><td>RW</td><td>The bit1 of 2640H</td></tr>
<tr><td>MO1</td><td>Pr.02-16 = 52</td><td>RW</td><td>The bit3 of 2640H</td></tr>
<tr><td>MO2</td><td>Pr.02-17 = 52</td><td>RW</td><td>The bit4 of 2640H</td></tr>
<tr><td>MO10 or RA10</td><td>Pr.02-36 = 51</td><td>RW</td><td>The bit5 of 2640H</td></tr>
<tr><td>MO11 or RA11</td><td>Pr.02-37 = 51</td><td>RW</td><td>The bit6 of 2640H</td></tr>
<tr><td>RA12</td><td>Pr.02-38 = 51</td><td>RW</td><td>The bit7 of 2640H</td></tr>
<tr><td>RA13</td><td>Pr.02-39 = 51</td><td>RW</td><td>The bit8 of 2640H</td></tr>
<tr><td>RA14</td><td>Pr.02-40 = 51</td><td>RW</td><td>The bit9 of 2640H</td></tr>
<tr><td>RA15</td><td>Pr.02-41= 51</td><td>RW</td><td>The bit10 of 2640H</td></tr>
</table></td></tr>
<tr><td>65</td><td>Output for both CANopen and RS-485</td><td>To control output of CANopen & InnerCOM internal communication.</td></tr>
</table>

<table>
<tr><th>Settings</th><th>Functions</th><th>Descriptions</th></tr>
<tr><td>66</td><td>SO output logic A (N.O.)</td><td rowspan="2">
<table>
<tr><th rowspan="2">Status of the drive</th><th colspan="2">Status of safety output</th></tr>
<tr><th>Status A (MOx=66)</th><th>Status B (MOx=68)</th></tr>
<tr><td>Normal</td><td>Broken circuit (Open)</td><td>Short circuit (Close)</td></tr>
<tr><td>STO</td><td>Short circuit (Close)</td><td>Broken circuit (Open)</td></tr>
<tr><td>STL1–STL3</td><td>Short circuit (Close)</td><td>Broken circuit (Open)</td></tr>
</table>
</td></tr>
<tr><td>68</td><td>SO output logic B (N.C.)</td></tr>
<tr><td>67</td><td>Analog input level reached</td><td>The multi-function output terminals operate when the analog input level is between the high level and the low level.
Pr.03-44: Select one of the analog input channels (AVI, ACI and AUI) to be compared.
Pr.03-45: The high level for the analog input, default is 50%.
Pr.03-46: The low level for the analog input, default is 10%.
If analog input > Pr.03-45, the multi-function output terminal operates. If analog input < Pr.03-46, the multi-function output terminal stops output.</td></tr>
<tr><td>70</td><td>Fan warning detection output</td><td>The terminal works when the internal fan warning activates</td></tr>
<tr><td>75</td><td>Forward running status</td><td rowspan="2">MO=75 activates (ON) when the drive runs in forward.
MO=76 activates (ON) when the drive runs in reverse.
When the drive is in stop status, MO=75 and MO=76 deactivates (OFF).
<table>
<tr><th rowspan="2"></th><th colspan="4">Multi-function output (MO) terminal</th></tr>
<tr><th>25
Forward command</th><th>26
Reverse command</th><th>75
Forward running status</th><th>76
Reverse running status</th></tr>
<tr><td>Drive runs in FWD</td><td>ON</td><td>OFF</td><td>ON</td><td>OFF</td></tr>
<tr><td>Drive runs in REV</td><td>OFF</td><td>ON</td><td>OFF</td><td>ON</td></tr>
<tr><td>Drive stops</td><td>The drive runs in forward and stops. The "FWD" light on the panel is in a steady ON status, and MO=25 remains ON.</td><td>The drive runs in reverse and stops. The "REV" light on the panel is in a steady ON status, and MO=26 remains ON.</td><td>OFF</td><td>OFF</td></tr>
<tr><td></td><td colspan="2">When the drive is in stop status, either MO=25 or MO=26 activates (ON).</td><td colspan="2">When the drive is in stop status, both MO=75 and MO=76 deactivate (OFF).</td></tr>
</table>
</td></tr>
<tr><td>76</td><td>Reverse running status</td></tr>
</table>

Example: Crane Application

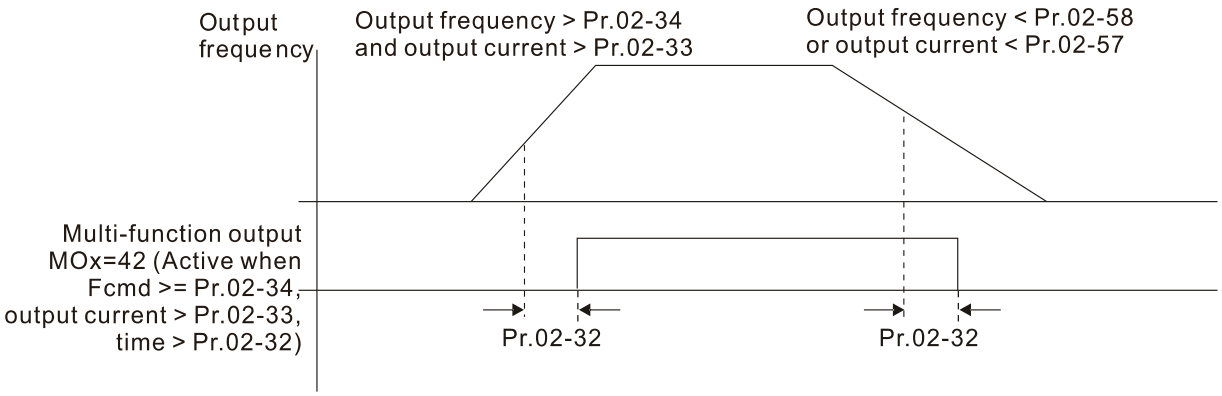

It is recommended to be used with Dwell function as shown in the following:

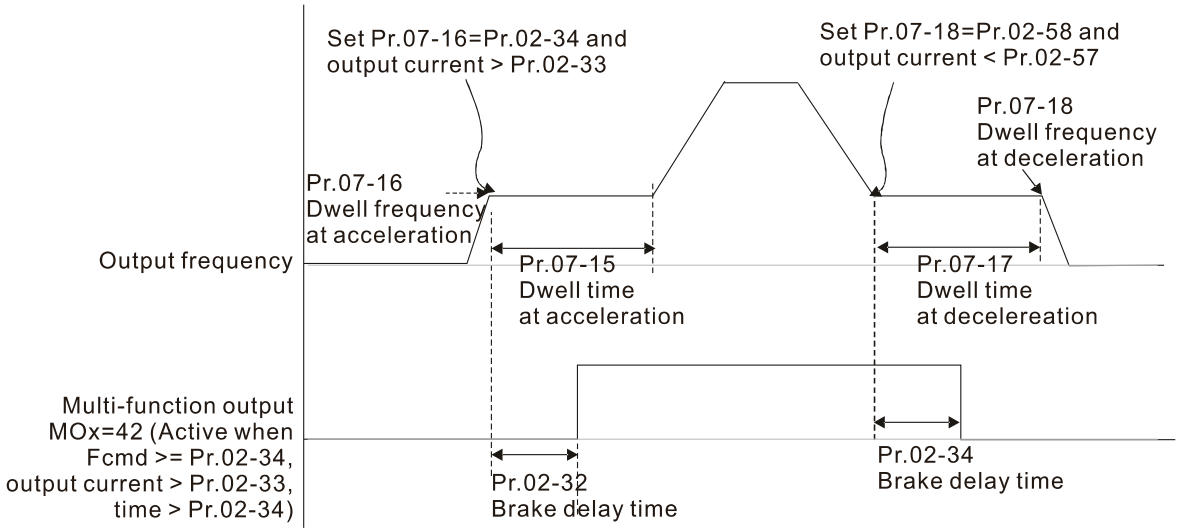

- When using the crane application and MOx = 42, Pr.02-34 must be larger than Pr.02-58; Pr.02-33 must be larger than Pr.02-57.
- Add Remote IO function to directly control drive's AO / DO and read current AI / DI status through the standard Modbus, the corresponding indexes of 26xx are as following:

	bit15	bit14	bit13	bit12	bit11	bit10	bit9	bit8	bit7	bit6	bit5	bit4	bit3	bit2	bit1	bit0
2600h	MI15	MI14	MI13	MI12	MI11	MI10	MI8	MI7	MI6	MI5	MI4	MI3	MI2	MI1	REV	FWD
2640h	-	-	-	-	-	MO15	MO14	MO13	MO12	MO11	MO10	MO2	MO1	-	RY2	RY1
2660h	AVI		-	-	-	-	-	-	-	-	-	-	-	-	-	-
2661h	ACI		-	-	-	-	-	-	-	-	-	-	-	-	-	-
2662h	AUI		-	-	-	-	-	-	-	-	-	-	-	-	-	-
266Ah	AI10		-	-	-	-	-	-	-	-	-	-	-	-	-	-
266Bh	AI11		-	-	-	-	-	-	-	-	-	-	-	-	-	-
26A0h	AFM1			-	-	-	-	-	-	-	-	-	-	-	-	-
26A1h	AFM2			-	-	-	-	-	-	-	-	-	-	-	-	-
26AAh	AO10			-	-	-	-	-	-	-	-	-	-	-	-	-
26ABh	AO11			-	-	-	-	-	-	-	-	-	-	-	-	-

In addition, the AI and DI value can be read directly, while DO and AO must be controlled by Modbus under corresponding parameter function. The related parameter definition is as following:

DO

Terminal	Pr. Setting	Indexes of Modbus direct control
RY1	Pr.02-13 = 51	The bit0 of 2640h
RY2	Pr.02-14 = 51	The bit1 of 2640h
MO1	Pr.02-16 = 51	The bit3 of 2640h

Terminal	Pr. Setting	Indexes of Modbus direct control
MO2	Pr.02-17 = 51	The bit4 of 2640h
MO10	Pr.02-36 = 51	The bit5 of 2640h
MO11	Pr.02-37 = 51	The bit6 of 2640h
MO12	Pr.02-38 = 51	The bit7 of 2640h
MO13	Pr.02-39 = 51	The bit8 of 2640h
MO14	Pr.02-40 = 51	The bit9 of 2640h
MO15	Pr.02-41 = 51	The bit10 of 2640h

AO

Terminal	Pr. Setting	Indexes of Modbus direct control
AFM1	Pr.03-20=21	The value of 26A0h
AFM2	Pr.03-23=21	The value of 26A1h
AFM10	Pr.14-12=21	The value of 26AAh
AFM11	Pr.14-13=21	The value of 26ABh

02-18 Multi-function Output Setting

Default: 0000h

Settings 0000h–FFFFh (0: N.O. ; 1:N.C.)

- This parameter is in hexadecimal.
- This parameter is set by a bit. If a bit is 1, the corresponding multi-function output acts in an opposite way.

  Example: Assume Pr.02-13=1 (indication when the drive is operating). If the output is positive, the bit is set to 0, and the Relay is ON when the drive runs and is OFF when the drive stops. On the contrary, if the output is negative, and the bit is set to 1, then the Relay is OFF when the drive runs and is ON when the drive stops.

bit15	bit14	bit13	bit12	bit11	bit10	bit9	bit8	bit7	bit6	bit5	bit4	bit3	bit2	bit1	bit0
MO20	MO19	MO18	MO17	MO16	MO15	MO14	MO13	MO12	MO11	MO10	MO2	MO1	Reserved	RY2	RY1

02-19 Terminal Counting Value Reached (returns to 0)

Default: 0

Settings 0–65500

- You can set the input point for the counter using the multi-function terminal MI6 as a trigger terminal (set Pr.02-06 to 23). When counting is completed, the specified multi-function output terminal is activated (Pr.02-13, Pr.02-14, Pr.02-36, Pr.02-37 are set to 18). Pr.02-19 cannot be set to 0 at this time.

  Example: When the displayed value is c5555, the drive count is 5,555 times. If the displayed value is c5555•, the actual count value is 55,550–55,559.

02-20 Preliminary Counting Value Reached (does not return to 0)

Default: 0

Settings 0–65500

- When the counter value counts from 1 to reach this value, the corresponding multi-function output terminal is activated (Pr.02-13, Pr.02-14, Pr.02-36, Pr.02-37 are set to 17). You can use this parameter as the end of counting to make the drive run from the low speed to stop.

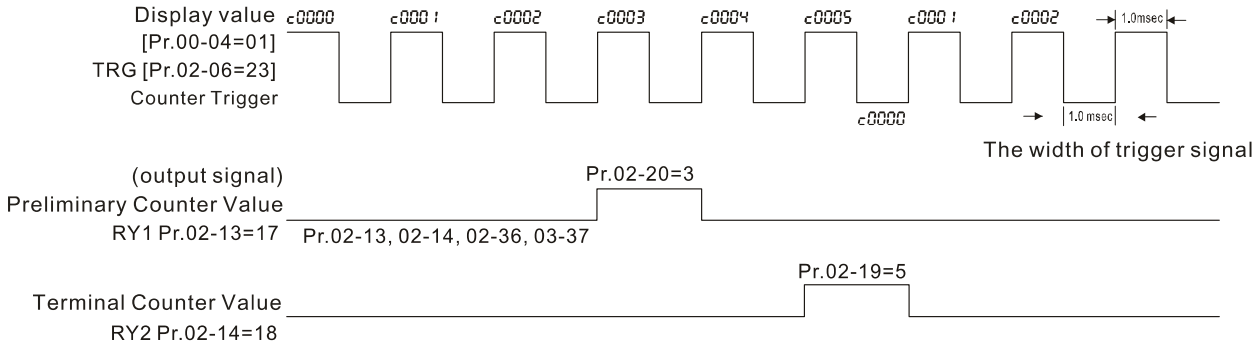

02-21 Digital Output Gain (DFM)

Default: 1

Settings 1–166

Sets the signal for the digital output terminals (DFM-DCM) and the digital frequency output (pulse, work period=50%). The output pulse per second = output frequency × Pr.02-21.

02-22 Desired Frequency Reached 1

Default: 60.0 / 50.00

Settings 0.00–599.00 Hz

02-23 The Width of the Desired Frequency Reached 1

Default: 2.00

Settings 0.00–599.00 Hz

02-24 Desired Frequency Reached 2

Default: 60.00 / 50.00

Settings 0.00–599.00 Hz

02-25 The Width of the Desired Frequency Reached 2

Default: 2.00

Settings 0.00–599.00 Hz

Once the output speed (frequency) reaches desired speed (frequency), if the corresponding multi-function output terminal is set to 3–4 (Pr.02-13, Pr.02-14, Pr.02-36 and Pr.02-37), this multi-function output terminal is “closed”.

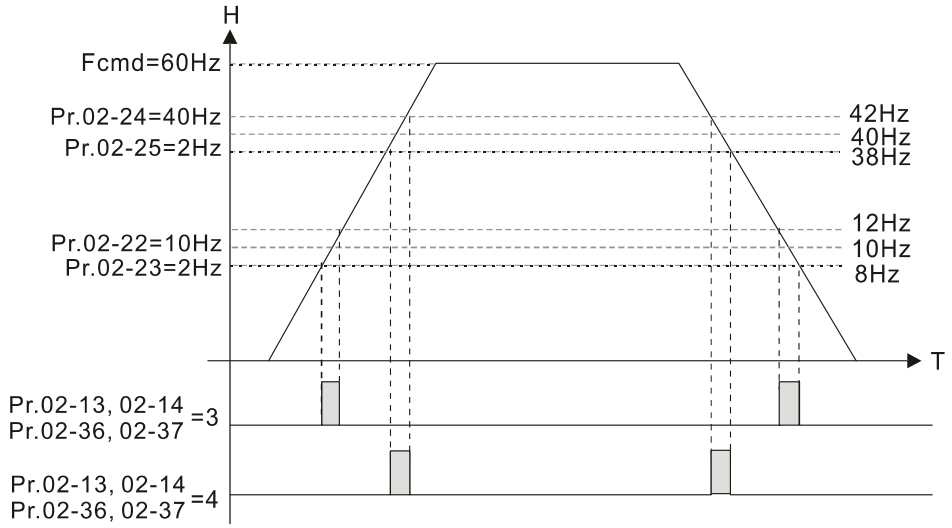

02-32 Brake Delay Time

Default: 0.000

Settings 0.000–65.000 sec.

When the AC motor drive runs after the setting delay time of Pr.02-32, the corresponding multi-function output terminal (12: mechanical brake release) is “closed”. This function must be used with DC brake.

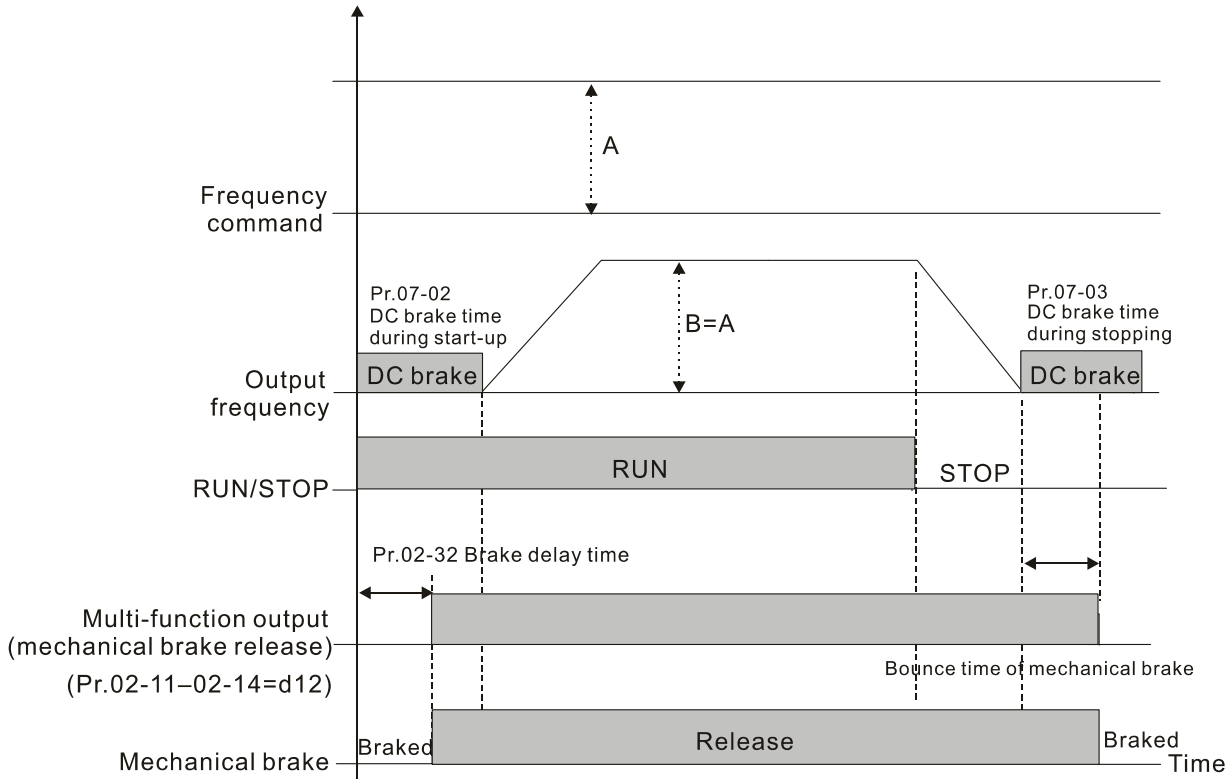

This parameter is invalid if it is used without DC brake. Refer to the following operation timing.

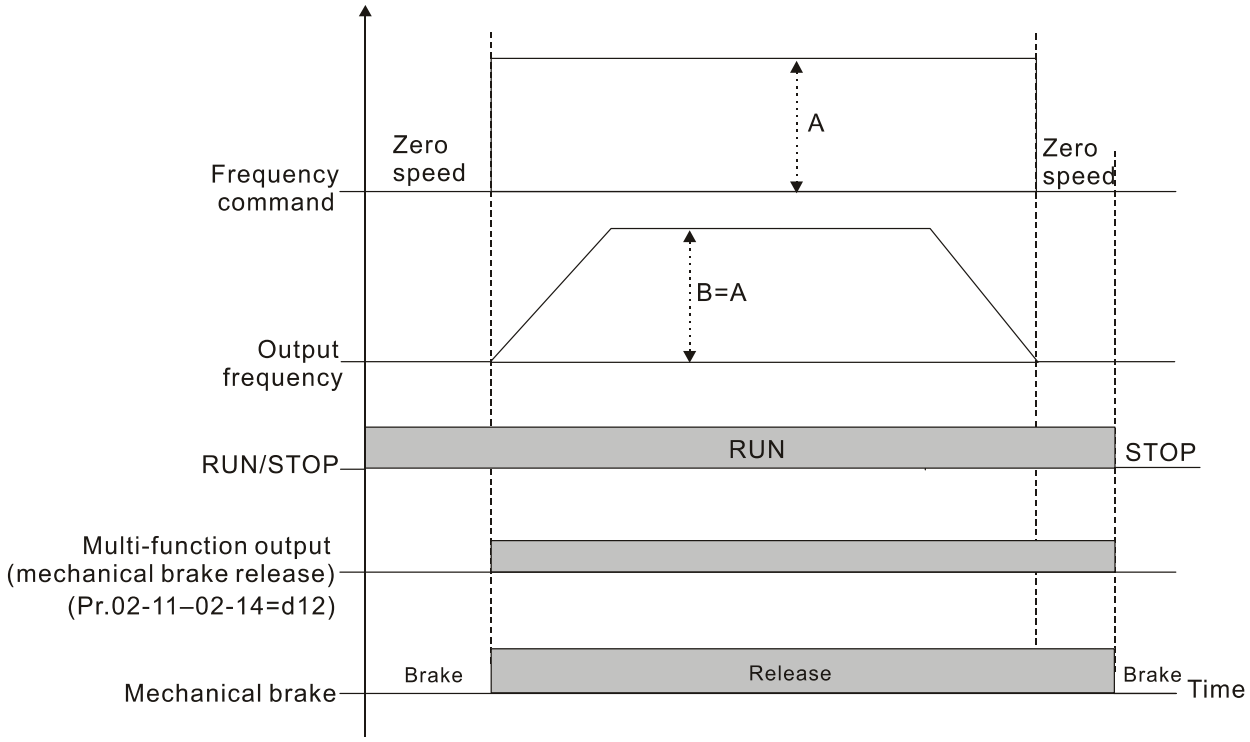

02-33 Output Current Level Setting for Multi-function Output Terminals

Default: 0

Settings 0–100%

- When the drive outputs current higher than or equal to Pr.02-33 (≥ Pr.02-33), the multi-function output parameters active (Pr.02-13, Pr.02-14, Pr.02-16, and Pr.02-17 are set to 27).
- When the drive outputs current lower than Pr.02-33 (< Pr.02-33), the multi-function output parameters active (Pr.02-13, Pr.02-14, Pr.02-16, and Pr.02-17 are set to 28).

02-34 Output Frequency Setting for Multi-function Output Terminals

Default: 3.00

Settings 0.00–599.00 Hz (Motor speed when using PG)

- When the drive outputs frequency higher than or equal to Pr.02-34 (actual output frequency H ≥ Pr.02-34), the multi-function terminals activate (Pr.02-13, Pr.02-14, Pr.02-16 and Pr.02-17 are set to 29).
- When the drive outputs frequency lower than Pr.02-34 (actual output frequency H < Pr.02-34), the multi-function terminals activate (Pr.02-13, Pr.02-14, Pr.02-16 and Pr.02-17 are set to 30).

02-35 External Operation Control Selection after Reset and Reboot

Default: 0

Settings 0: Disable
1: Drive runs if the RUN command remains after reset or re-boot

Setting 1: **The drive automatically executes the RUN command under the following circumstances, pay extra attention on this.**

- Status 1: After the drive is **powered on** and **the external terminal for RUN stays ON**, the drive runs.
- Status 2: After clearing a fault once a fault is detected and the external terminal for RUN stays ON, you can run the drive by pressing the RESET key.

02-47 Motor Zero-speed Level

Default: 0

Settings 0–65535 rpm

- Use this parameter with the multi-function output terminals (set to 43). The motor needs to install encoder to feedback the actual rotating speed and use with PG card.
- Use this parameter to set the level of motor at zero-speed. When the speed is lower than this setting, the corresponding multi-function output terminal that is set to 43 is ON (default), as shown below:

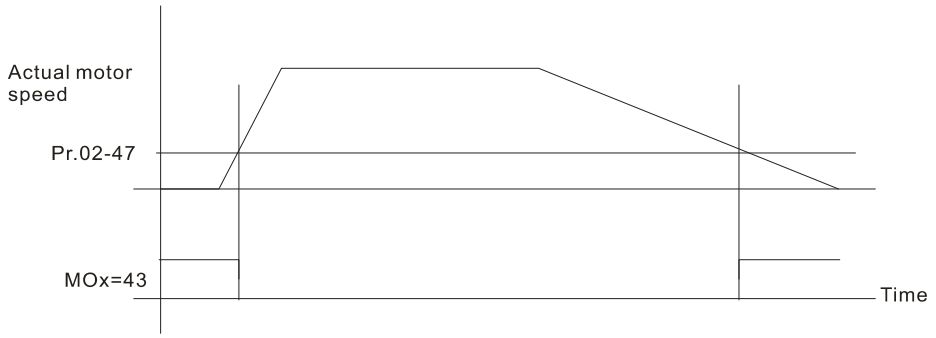

02-48 Maximum Frequency of Resolution Switch

Default: 60.00

Settings 0.00–599.00 Hz

02-49 Switch Delay Time of Maximum Output Frequency

Default: 0.000

Settings 0.000–65.000 sec.

Use this parameter to improve unstable speed or unstable position due to insufficient analog resolution. This function needs to be used with the external terminal (setting to 43). After setting this parameter, you also need to adjust the analog output resolution of the controller so as to work with the parameter function.

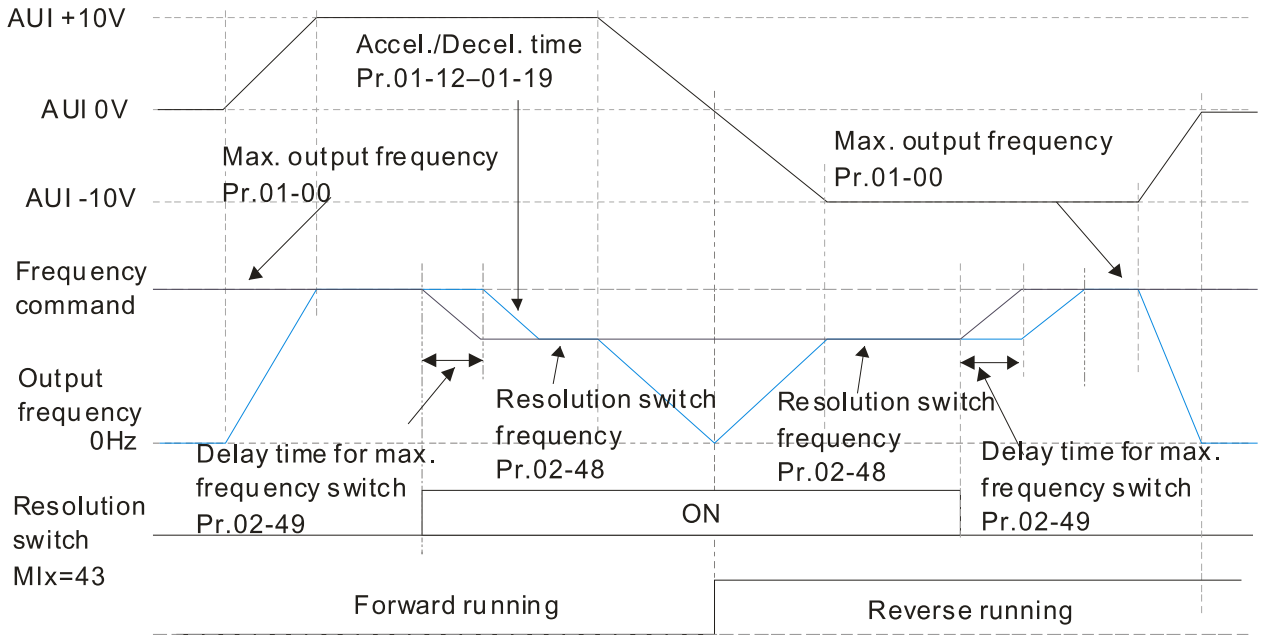

02-50 Display the Status of Multi-function Input Terminal

Default: Read only

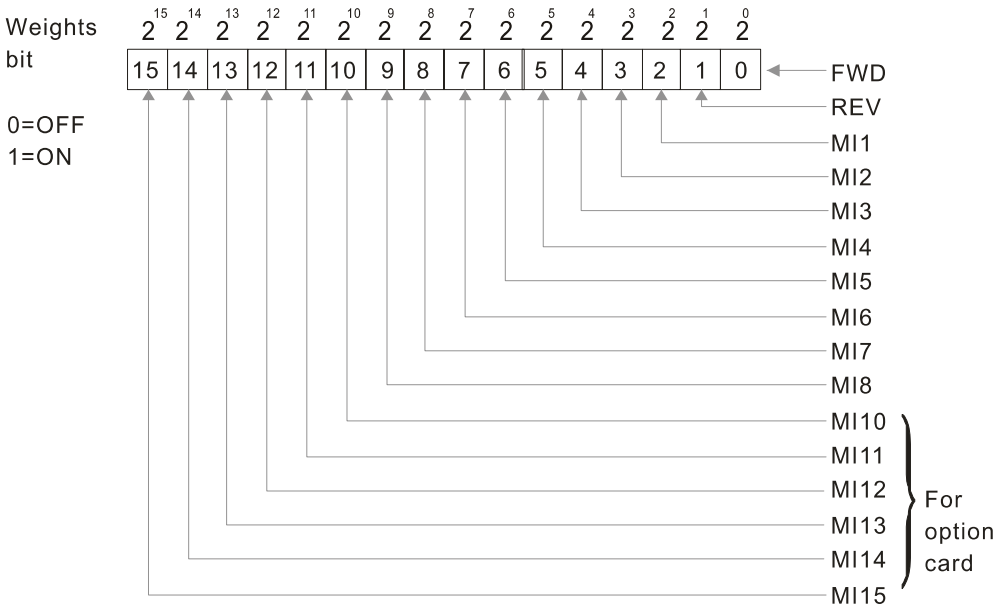

Example:

When Pr.02-50 displays 0034h (hex) (that is, the value is 110100 (binary), it means that MI1, MI3 and MI4 are ON.

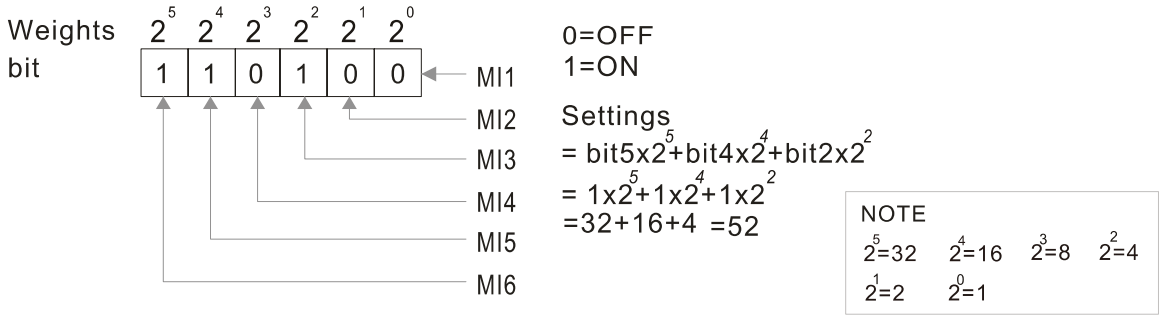

02-51 Display the Status of Multi-function Output Terminal

Default: Read only

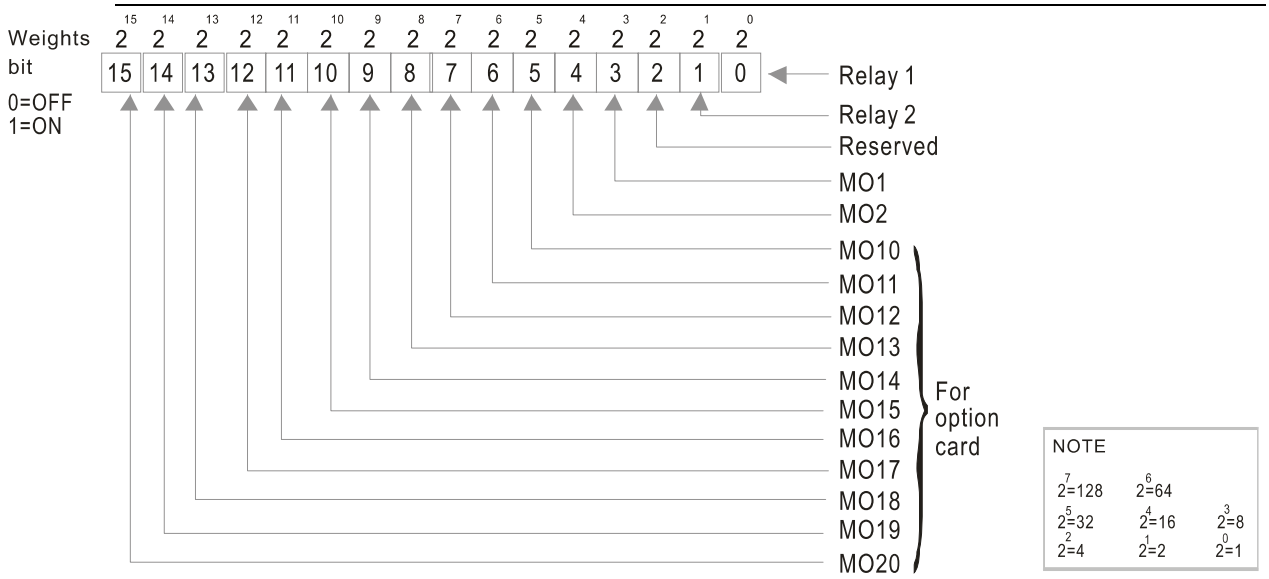

Example:

When Pr.02-51 displays 0023h (hex) (that is, the value is 100011 (binary)), it means that RY1, RY2, and MO1 are ON.

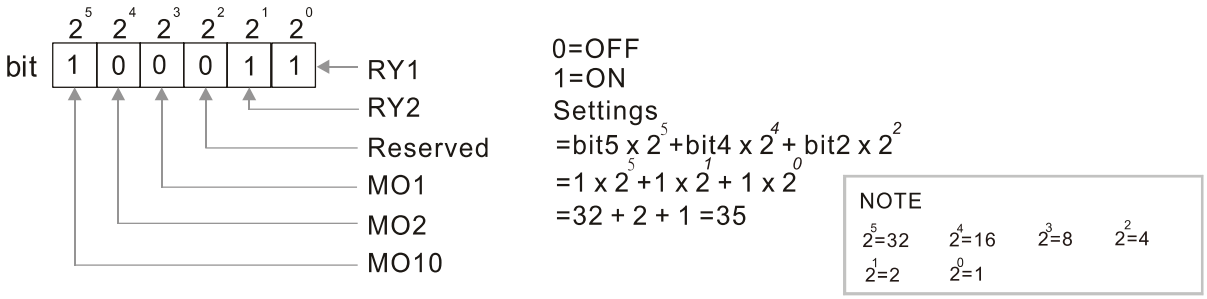

02-52 Display the External Multi-function Input Terminals Used by PLC

Default: Read only

Pr.02-52 displays the external multi-function input terminals that used by PLC.

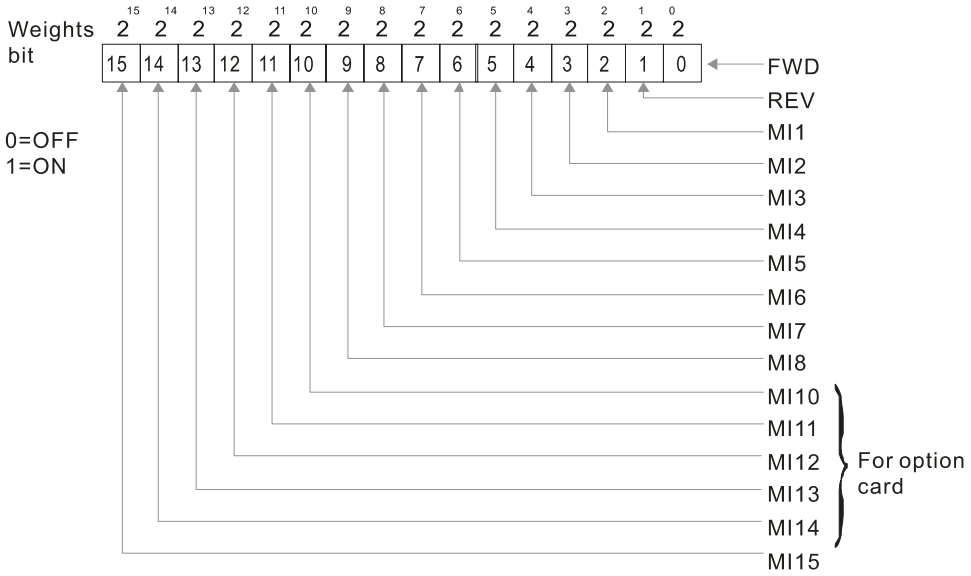

Example:

When Pr.02-52 displays 0034h (hex) (that is, the value is 110100 (binary)), it means that MI1, MI3 and MI4 are used by PLC.

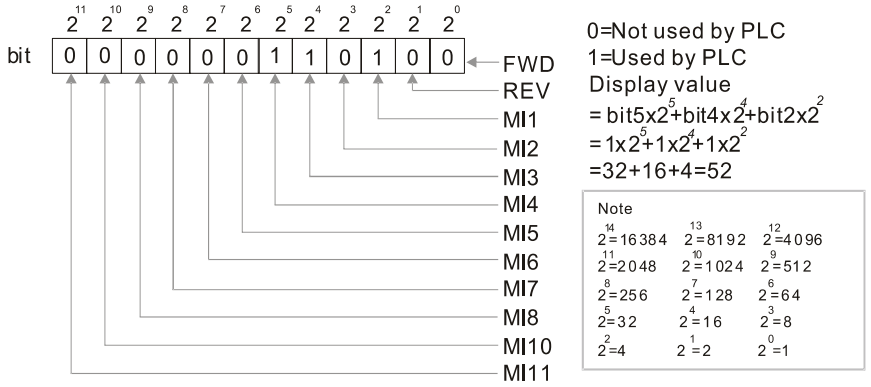

02-53 Display the External Multi-function Output Terminals Used by PLC

Default: Read only

Pr. 02-53 displays the external multi-function output terminal that used by PLC.

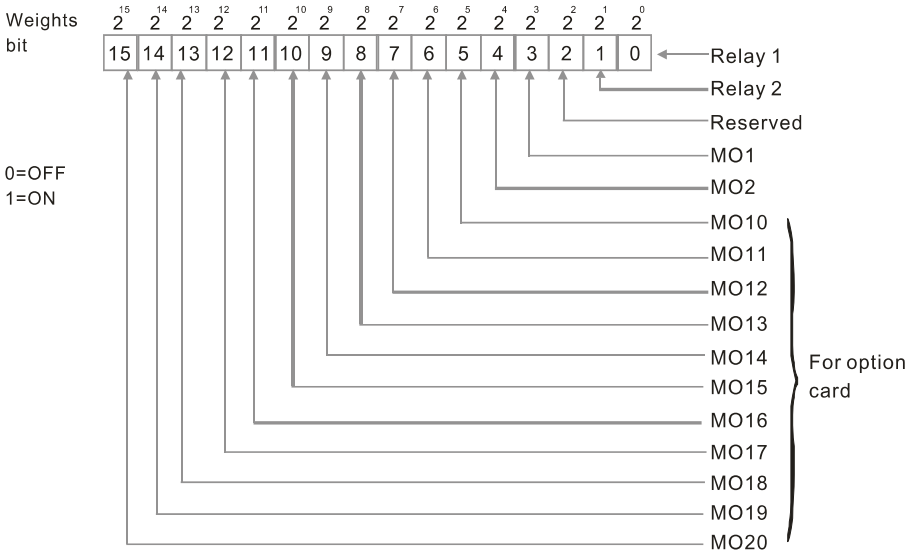

Example:

When Pr.02-53 displays 0003h (hex) (that is, the value is 0011 (binary)), it means that RY1 and RY2 are used by PLC.

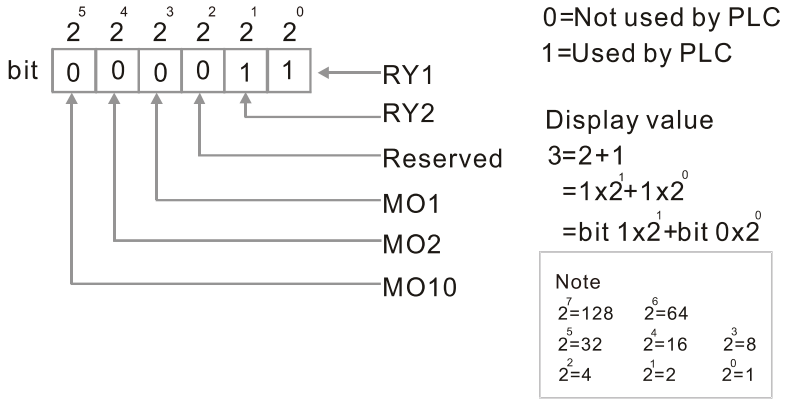

02-54 Display the Frequency Command Executed by External Terminal

Default: Read only

Settings 0.00–599.00 Hz (Read only)

When you set the source of the Frequency command as the external terminal, if Lv or Fault occurs, the external terminal Frequency command is saved in this parameter.

02-56 Brake Release Check Time

Default: 0.000 sec.

Settings 0.000–65.000 sec.

Use Pr.02-56 with MIx=55 (brake release check). Sets for the time difference of mechanical brake delay time and actual brake operation.

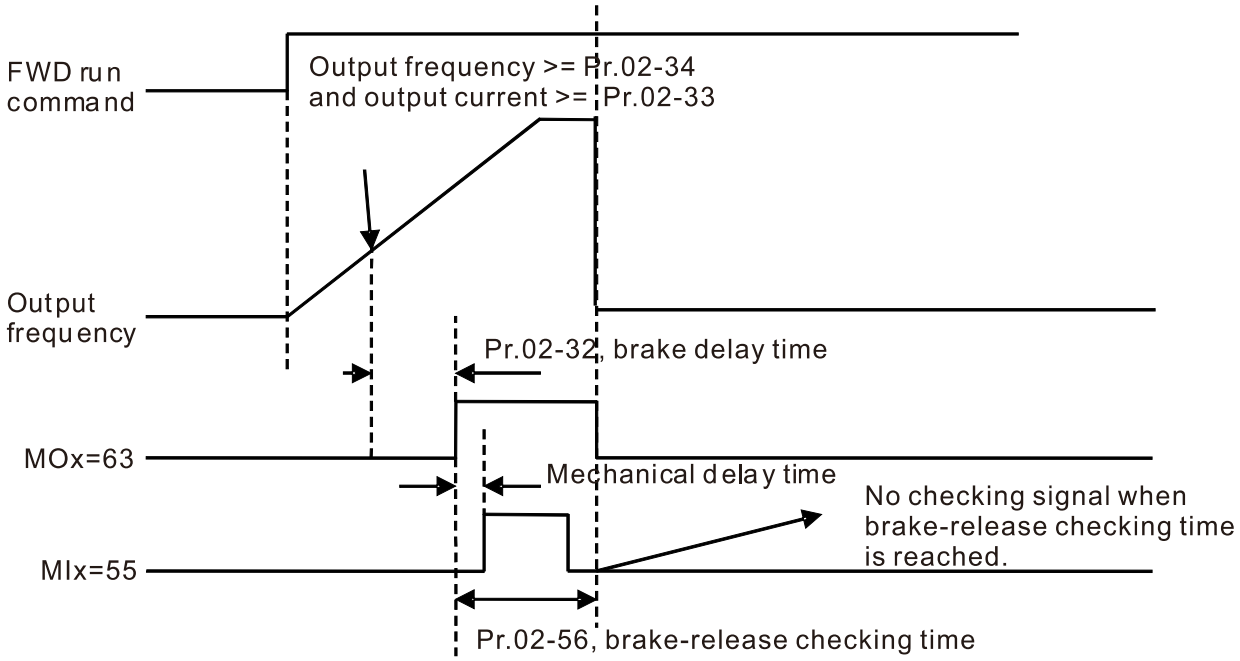

02-57 Multi-function output terminal: Function 42: Brake Current Check Point

Default: 0

Settings 0–100%

02-58 Multi-function output terminal (Function 42) : Brake Frequency Check Point

Default: 0.00

Settings 0.00–599.00 Hz

- Pr.02-32, Pr.02-33, Pr.02-34, Pr.02-57 and Pr.02-58 can be applied on setting up cranes. (Choose crane action #42 to set up multi-function output Pr.02-13, Pr.02-14, Pr.02-16 and Pr.02-17)
- When the drive outputs current higher than the setting for Pr.02-33 Pivot Point of the Current (≥ Pr.02-33), and outputs frequency higher than the setting for Pr.02-34 Pivot Point of the Frequency (≥ Pr.02-34), multi-function output Pr.02-13, Pr.02-14, Pr.02-16 and Pr.02-17 are set to 42 after the delay time setting for Pr.02-32.
- When the Pivot Point of the Current 's setting Pr.02-57≠0 and when the output current of the drive is lower than the setting for Pr.02-57 (< Pr.02-57), or the output frequency is lower than the setting for Pr.02-58 (< Pr.02-58), disable the setting #42 of the multi-function output Pr.02-13, Pr.02-14, Pr.02-16 and Pr.02-17
- When Pr.02-57 = 0, the output current is lower than the setting for Pr.02-33 Pivot Point of the current (< Pr.02-33), or the output frequency is lower than the setting for Pr.02-58 (< Pr.02-58), disable the setting of #42 of the multi-function output Pr.02-13, Pr.02-14, Pr.02-16 and Pr.02-17.
- When using crane application, and MOx=42, Pr.02-34 must be larger than Pr.02-58; and Pr.02-33 must be larger than Pr.02-57.

02-63 Frequency Reached Detection Amplitude

Default: 0.00

Settings 0.00–599.00 Hz

02-70 IO Card Types

Default: Read only

Settings Read only
1: EMC-BPS01
4: EMC-D611A
5: EMC-D42A
6: EMC-R6AA
11: EMC-A22A

02-71 DFM Output Selection

Default: 0

Settings 0: Use frequency with speed control as DFM output frequency
1: Use frequency with system acceleration / deceleration as DFM output frequency

02-74 Internal / External Multi-function Input Terminal Selection

Default: 0000h

Settings 0000–FFFFh

- Selects the terminals MI1–MI15 to be internal terminals or external terminals. When the MIx is set as internal terminal, the corresponding external terminal function is disabled.
- To activate internal terminals via Pr.02-75 setting.

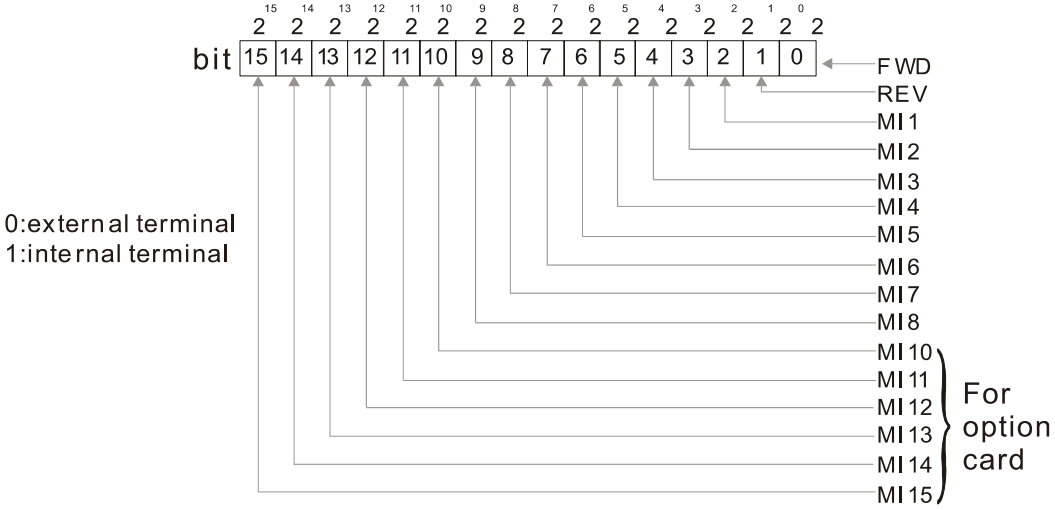

- Setting method: convert the binary 12bit number to hexadecimal number for input.
- Example: if the MI1, MI3, MI4 are virtual terminals, Pr.02-74=34h.

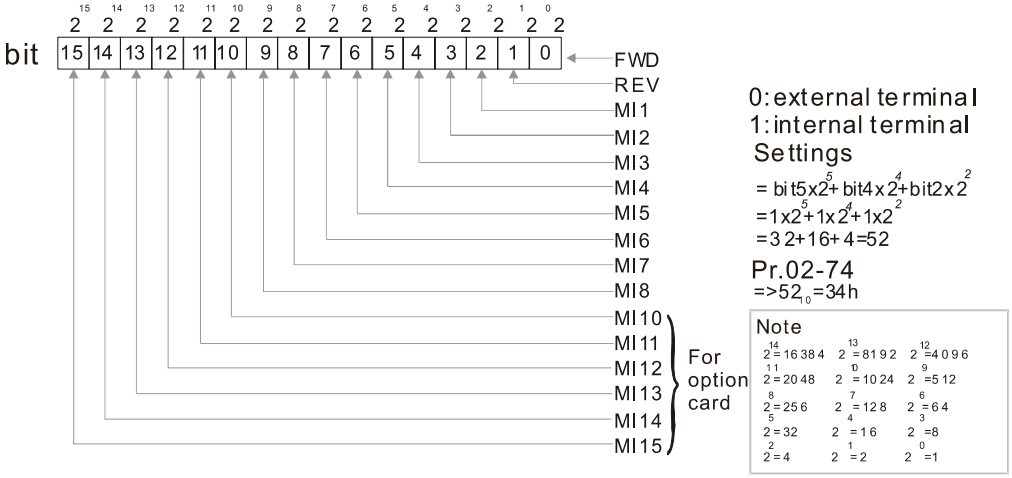

02-75 Internal Multi-function Output Terminal Selection

Default: 0000h

Settings 0000–FFFFh

- Sets the internal terminal action (ON / OFF) through digital keypad, communication or PLC.

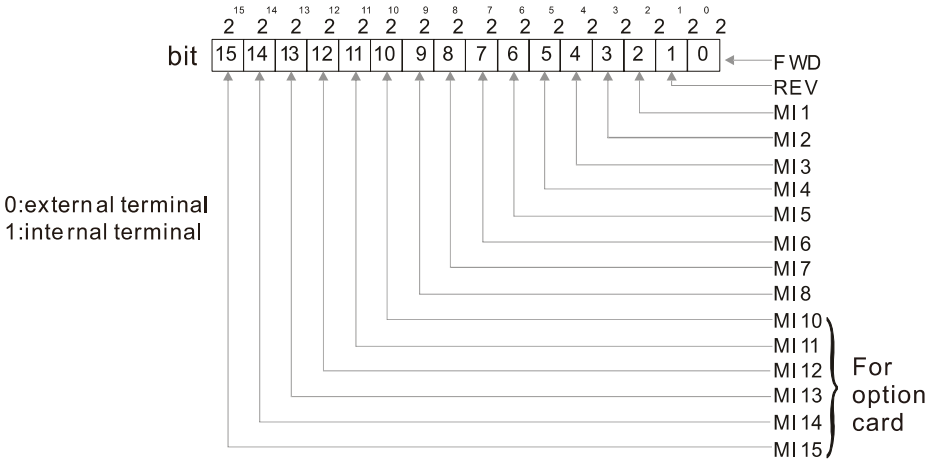

- Example: Set Pr.02-75=34h to activate MI1, MI3 and MI4.

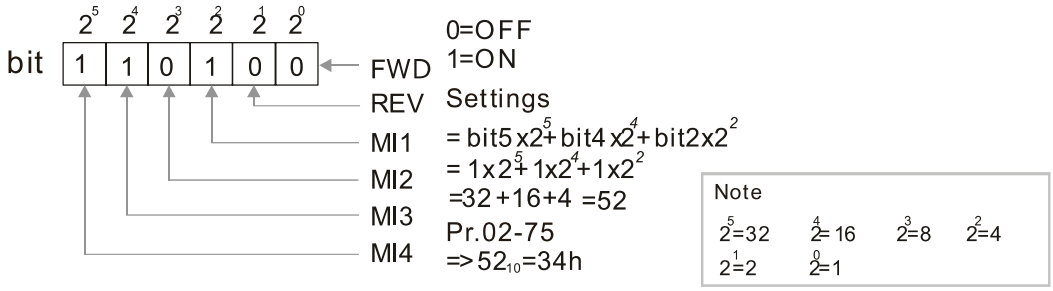

- The Local / Remote options on the digital keypad have the lowest priority.
- When the PLC uses the entity DI, the corresponded function of original DI can still be triggered through virtual terminals.
- Pr.02-74 and Pr.02-75 can both be changed during RUN.
- Pr.02-74 and Pr.02-75 are saved after power off.
- You can choose N.O. (Pr.02-12 bit = 0) or N.C. (Pr.02-12 bit = 1) through the Pr.02-12 MI mode to trigger the virtual terminals.

03 Analog Input / Output Parameter

✓ You can set this parameter during operation.

✓ 03-00 AVI Analog Input Selection

Default: 1

✓ 03-01 ACI Analog Input Selection

Default: 0

✓ 03-02 AUI Analog Input Selection

Default: 0

Settings

0: No function

1: Frequency command (speed limit under torque control mode)

2: Torque command (torque limit under speed control mode)

3: Torque compensation command

4: PID target value

5: PID feedback signal

6: Thermistor (PTC / KTY-84) input value

7: Positive torque limit

8: Negative torque limit

9: Regenerative torque limit

10: Positive / negative torque limit

11: PT100 thermistor input value

13: PID compensation value

- When you use analog input as the PID reference target input, you must set Pr.00-20 to 2 (external analog input).
  Setting method 1: Pr.03-00–03-02 set 1 as PID reference target input.
  Setting method 2: Pr.03-00–03-02 set 4 as PID reference target input.
  If the setting value 1 and setting value 4 exist at the same time, the AVI input has highest priority to become the PID reference target input value.
- When you use analog input as the PID compensation value, you must set Pr.08-16 to 1 (source of PID compensation value is analog input). You can see the compensation value with Pr.08-17.
- When using the Frequency command or TQC speed limit, the corresponding value for 0–±10 V / 4–20 mA is 0–maximum operation frequency (Pr.01-00).
- When using the torque command or torque limit, the corresponding value for 0–±10 V / 4–20 mA is 0–maximum output torque (Pr. 11-27).
- When using the torque compensation, the corresponding value for 0–±10 V / 4–20m A is 0–the motor's rated torque.
- The analog input AVI / ACI (use with Switch terminal to switch SW2 to 0–10V) supports KTY84. The AUI does not support this function.
- When you use KTY84, you can only choose either AVI or ACI at the same time. The AVI is prior to ACI.
- If the settings for Pr.03-00–Pr.03-02 are the same, the AVI input has highest priority.

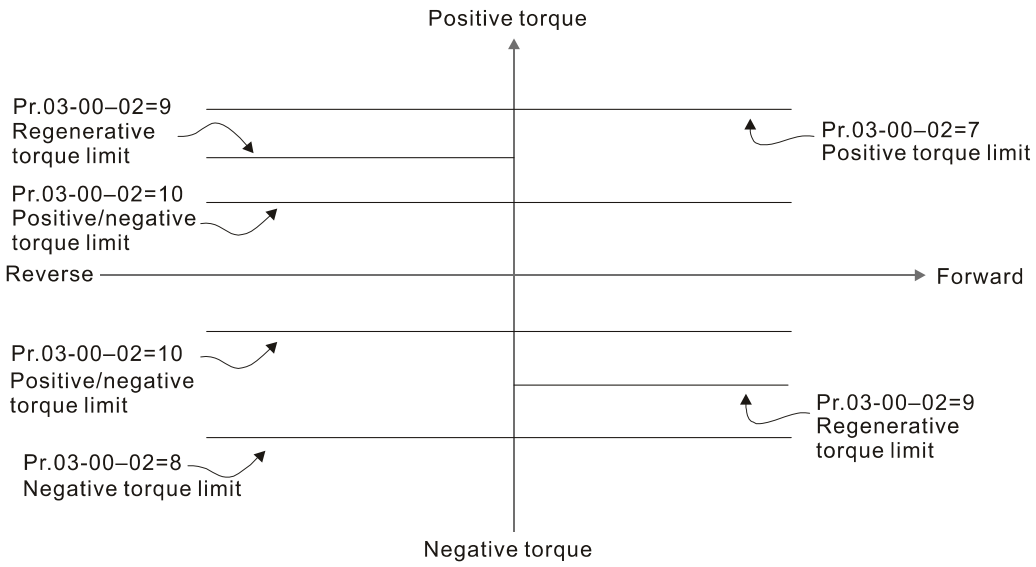

03-03 AVI Analog Input Bias

Default: 0.0

Settings -100.0–100.0%

Sets the corresponding AVI voltage for the external analog input 0.

03-04 ACI Analog Input Bias

Default: 0.0

Settings -100.0–100.0%

Sets the corresponding ACI current for the external analog input 0.

03-05 AUI Analog Voltage Input Bias

Default: 0.0

Settings -100.0–100.0%

Sets the corresponding AUI voltage for the external analog input 0.

The corresponding external input voltage / current signal and the set frequency is 0–10 V (4–20 mA) corresponds to 0–maximum frequency.

03-07 AVI Positive / Negative Bias Mode
03-08 ACI Positive / Negative Bias Mode
03-09 AUI Positive / Negative Bias Mode

Default: 0

Settings 0: No bias
1: Lower than or equal to bias
2: Greater than or equal to bias
3: The absolute value of the bias voltage while serving as the center
4: Serve bias as the center

Using negative bias to set the frequency greatly reduces the noise interference. In a noisy environment, do NOT use signals less than 1 V to set the drive's operation frequency.

In the diagram below: Black line: Curve with no bias. Gray line: curve with bias

Diagram 1

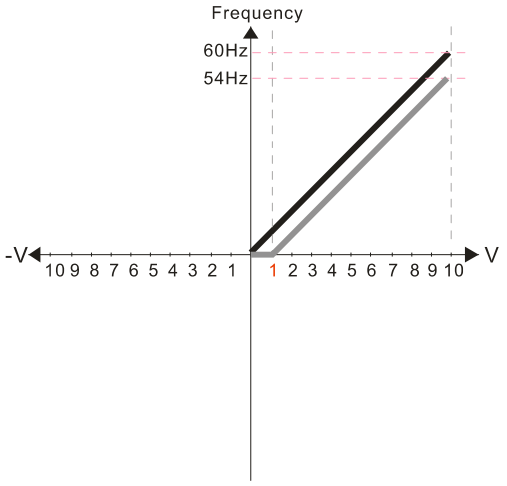

Pr.03-03=10%

Pr.03-07~03-09 (Positive/Negative Bias Mode)

0: No bias
1: Lower than or equal to bias
2: Greater than or equal to bias
3: The absolute value of the bias voltage while serving as the center
4: Serve bias as the center

Pr.03-10 (Analog Frequency Command for Reverse Run)

0: Negative frequency is not valid. Forward and reverse run is controlled by digital keypad or external terminal.
1: Neagtive frequency is valid. Positive frequency = forward run; negative frequency = reverse run. Direction can not be switched by digital keypad or external teriminal control.

Pr.03-11 Analog Input Gain (AVI)= 100%

Diagram 2

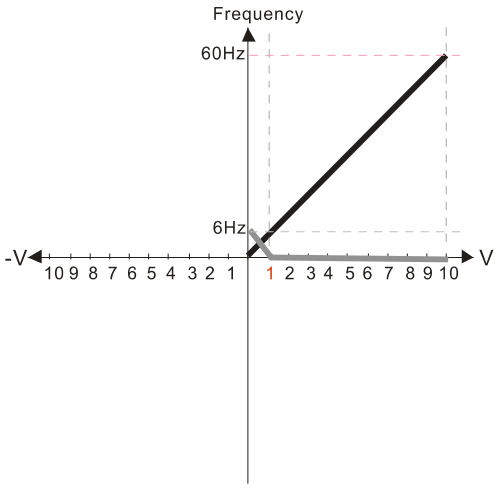

Pr.03-03=10%

Pr.03-07~03-09 (Positive/Negative Bias Mode)

0: No bias
1: Lower than or equal to bias
2: Greater than or equal to bias
3: The absolute value of the bias voltage while serving as the center
4: Serve bias as the center

Pr.03-10 (Analog Frequency Command for Reverse Run)

0: Negative frequency is not valid. Forward and reverse run is controlled by digital keypad or external terminal.
1: Neagtive frequency is valid. Positive frequency = forward run; negative frequency = reverse run. Direction can not be switched by digital keypad or external teriminal control.

Pr.03-11Analog Input Gain (AVI)=100%

Diagram 3

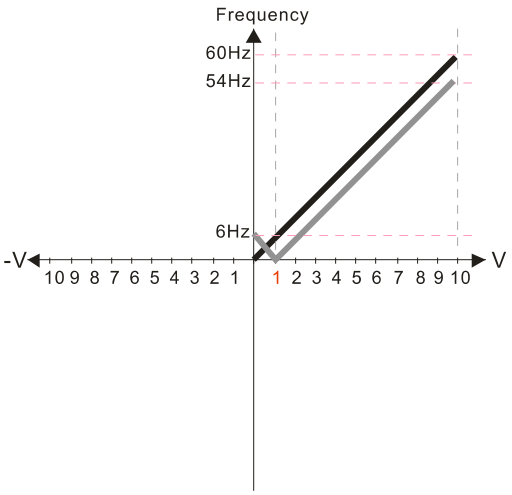

Pr.03-03=10%

Pr.03-07~03-09 (Positive/Negative Bias Mode)

0: No bias
1: Lower than or equal to bias
2: Greater than or equal to bias
3: The absolute value of the bias voltage while serving as the center
4: Serve bias as the center

Pr.03-10 (Analog Frequency Command for Reverse Run)

0: Negative frequency is not valid. Forward and reverse run is controlled by digital keypad or external terminal.
1: Neagtive frequency is valid. Positive frequency = forward run; negative frequency = reverse run. Direction can not be switched by digital keypad or external teriminal control.

Pr.03-11 Analog Input Gain (AVI) = 100%

Diagram 4

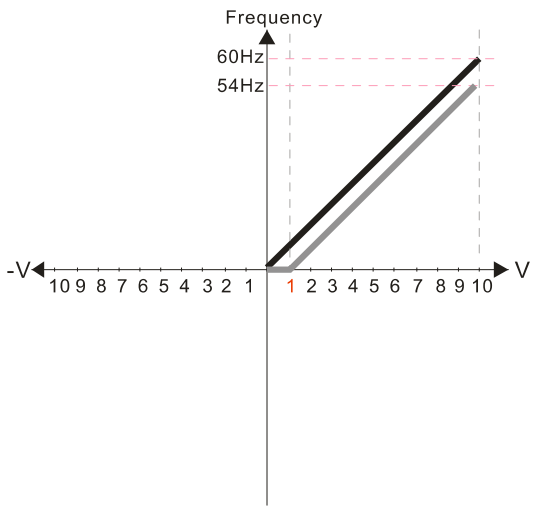

Pr.03-03=10%

Pr.03-07~03-09 (Positive/Negative Bias Mode)

0: No bias
1: Lower than or equal to bias
2: Greater than or equal to bias
3: The absolute value of the bias voltage while serving as the center
4: Serve bias as the center

Pr.03-10 (Analog Frequency Command for Reverse Run)

0: Negative frequency is not valid. Forward and reverse run is controlled by digital keypad or external terminal.
1: Neagtive frequency is valid. Positive frequency = forward run; negative frequency = reverse run. Direction can not be switched by digital keypad or external teriminal control.

Pr.03-11 Analog Input Gain (AVI) = 100%

Diagram 5

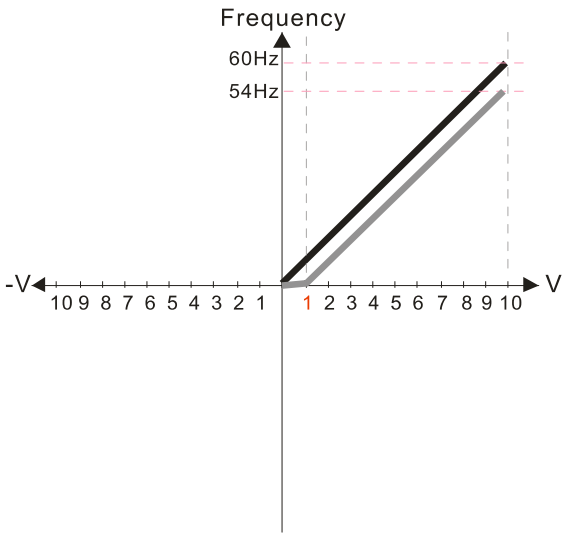

Pr.03-03=10%

Pr.03-07~03-09 (Positive/Negative Bias Mode)

0: No bias
1: Lower than or equal to bias
2: Greater than or equal to bias
3: The absolute value of the bias voltage while serving as the center
4: Serve bias as the center

Pr.03-10 (Analog Frequency Command for Reverse Run)

0: Negative frequency is not valid. Forward and reverse run is controlled by digital keypad or external terminal.
1: Neagtive frequency is valid. Positive frequency = forward run; negative frequency = reverse run. Direction can not be switched by digital keypad or external teriminal control.

Pr.03-11 Analog Input Gain (AVI)= 100%

Diagram 6

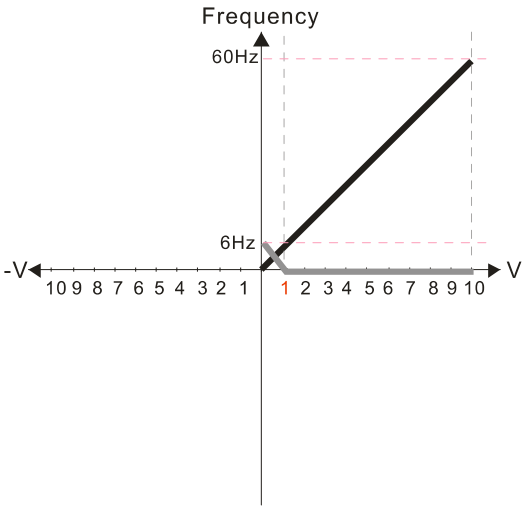

Pr.03-03=10%

Pr.03-07~03-09 (Positive/Negative Bias Mode)

0: No bias
1: Lower than or equal to bias
2: Greater than or equal to bias
3: The absolute value of the bias voltage while serving as the center
4: Serve bias as the center

Pr.03-10 (Analog Frequency Command for Reverse Run)

0: Negative frequency is not valid. Forward and reverse run is controlled by digital keypad or external terminal.
1: Neagtive frequency is valid. Positive frequency = forward run; negative frequency = reverse run. Direction can not be switched by digital keypad or external teriminal control.

Pr.03-11Analog Input Gain (AVI)= 100%

Diagram 7

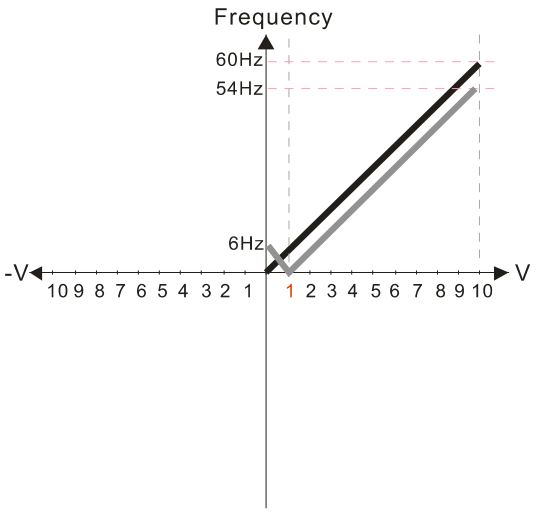

Pr.03-03=10%

Pr.03-07~03-09 (Positive/Negative Bias Mode)

0: No bias
1: Lower than or equal to bias
2: Greater than or equal to bias
3: The absolute value of the bias voltage while serving as the center
4: Serve bias as the center

Pr.03-10 (Analog Frequency Command for Reverse Run)

0: Negative frequency is not valid. Forward and reverse run is controlled by digital keypad or external terminal.
1: Neagtive frequency is valid. Positive frequency = forward run; negative frequency = reverse run. Direction can not be switched by digital keypad or external teriminal control.

Pr.03-11 Analog Input Gain (AVI) = 100%

Diagram 8

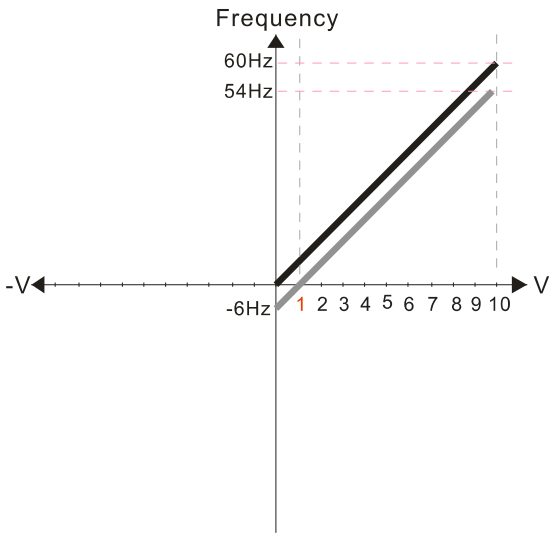

Pr.03-03=10%

Pr.03-07~03-09 (Positive/Negative Bias Mode)

0: No bias
1: Lower than or equal to bias
2: Greater than or equal to bias
3: The absolute value of the bias voltage while serving as the center
4: Serve bias as the center

Pr.03-10 (Analog Frequency Command for Reverse Run)

0: Negative frequency is not valid. Forward and reverse run is controlled by digital keypad or external terminal.
1: Neagtive frequency is valid. Positive frequency = forward run; negative frequency = reverse run. Direction can not be switched by digital keypad or external teriminal control.

Pr.03-11 Analog Input Gain (AVI) = 100%

Diagram 9

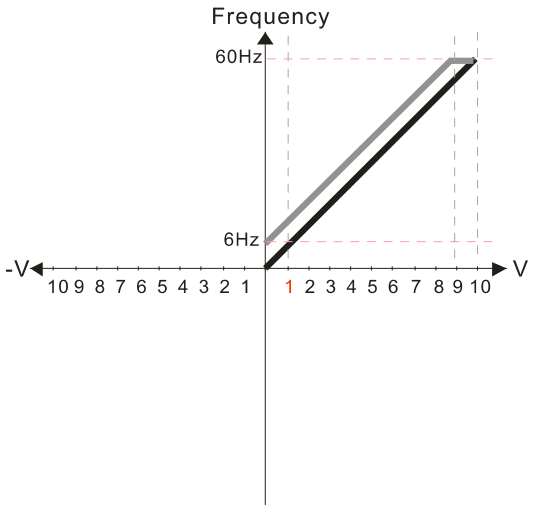

Pr.03-03=-10%

Pr.03-07~03-09 (Positive/Negative Bias Mode)

0: No bias
1: Lower than or equal to bias
2: Greater than or equal to bias
3: The absolute value of the bias voltage while serving as the center
4: Serve bias as the center

Pr.03-10 (Analog Frequency Command for Reverse Run)

0: Negative frequency is not valid. Forward and reverse run is controlled by digital keypad or external terminal.
1: Neagtive frequency is valid. Positive frequency = forward run; negative frequency = reverse run. Direction can not be switched by digital keypad or external teriminal control.

Pr.03-11 Analog Input Gain (AVI)= 100%

Diagram 10

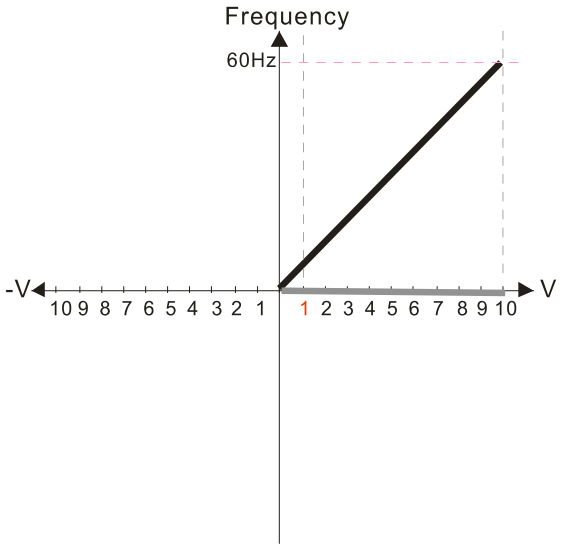

Pr.03-03=-10%

Pr.03-07~03-09 (Positive/Negative Bias Mode)

0: No bias
1: Lower than or equal to bias
2: Greater than or equal to bias
3: The absolute value of the bias voltage while serving as the center
4: Serve bias as the center

Pr.03-10 (Analog Frequency Command for Reverse Run)

0: Negative frequency is not valid. Forward and reverse run is controlled by digital keypad or external terminal.
1: Neagtive frequency is valid. Positive frequency = forward run; negative frequency = reverse run. Direction can not be switched by digital keypad or external teriminal control.

Pr.03-11 Analog Input Gain (AVI)= 100%

Diagram 11

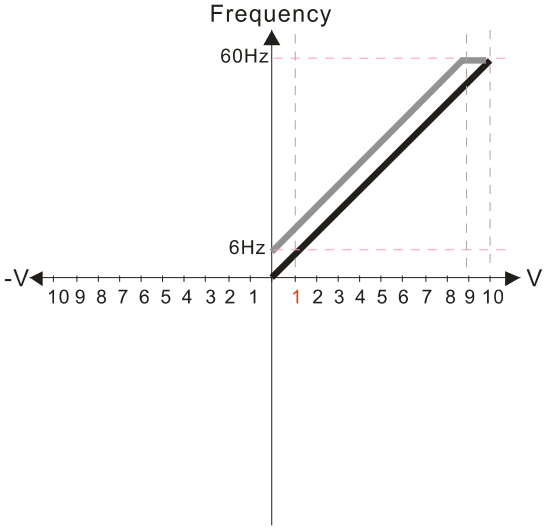

Pr.03-03=-10%

Pr.03-07~03-09 (Positive/Negative Bias Mode)

0: No bias
1: Lower than or equal to bias
2: Greater than or equal to bias
3: The absolute value of the bias voltage while serving as the center
4: Serve bias as the center

Pr.03-10 (Analog Frequency Command for Reverse Run)

0: Negative frequency is not valid. Forward and reverse run is controlled by digital keypad or external terminal.
1: Neagtive frequency is valid. Positive frequency = forward run; negative frequency = reverse run. Direction can not be switched by digital keypad or external teriminal control.

Pr.03-11 Analog Input Gain (AVI) = 100%

Diagram 12

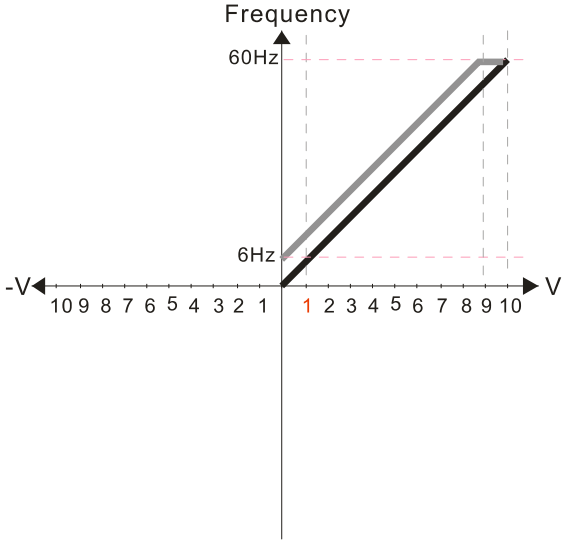

Pr.03-03=-10%

Pr.03-07~03-09 (Positive/Negative Bias Mode)

0: No bias
1: Lower than or equal to bias
2: Greater than or equal to bias
3: The absolute value of the bias voltage while serving as the center
4: Serve bias as the center

Pr.03-10 (Analog Frequency Command for Reverse Run)

0: Negative frequency is not valid. Forward and reverse run is controlled by digital keypad or external terminal.
1: Neagtive frequency is valid. Positive frequency = forward run; negative frequency = reverse run. Direction can not be switched by digital keypad or external teriminal control.

Pr.03-11 Analog Input Gain (AVI) = 100%

Diagram 13

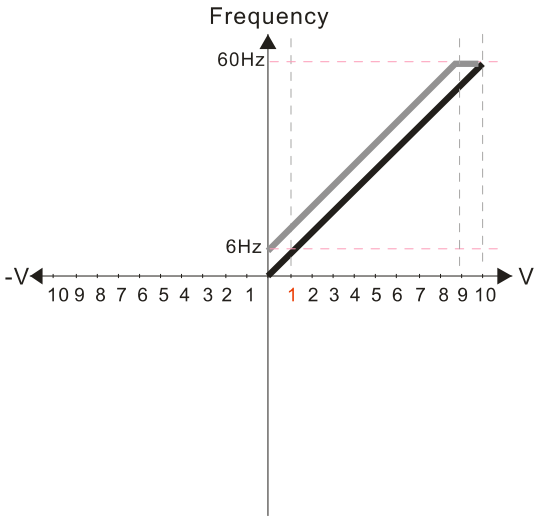

Pr.03-03=-10%

Pr.03-07~03-09 (Positive/Negative Bias Mode)
0: No bias
1: Lower than or equal to bias
2: Greater than or equal to bias
3: The absolute value of the bias voltage while serving as the center
4: Serve bias as the center

Pr.03-10 (Analog Frequency Command for Reverse Run)
0: Negative frequency is not valid. Forward and reverse run is controlled by digital keypad or external terminal.
1: Neagtive frequency is valid. Positive frequency = forward run; negative frequency = reverse run. Direction can not be switched by digital keypad or external teriminal control.

Pr.03-11 Analog Input Gain (AVI)= 100%

Diagram 14

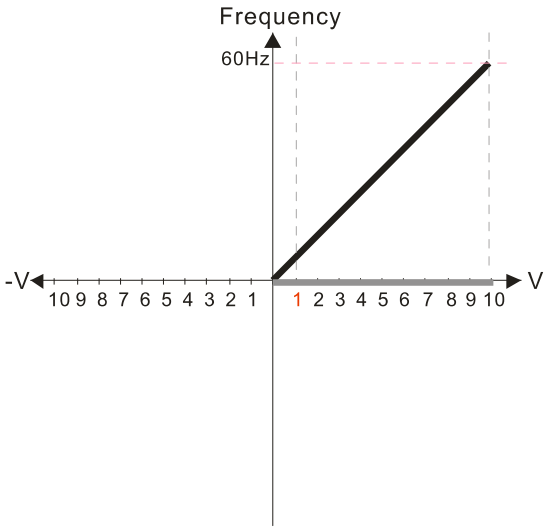

Pr.03-03=-10%

Pr.03-07~03-09 (Positive/Negative Bias Mode)
0: No bias
1: Lower than or equal to bias
2: Greater than or equal to bias
3: The absolute value of the bias voltage while serving as the center
4: Serve bias as the center

Pr.03-10 (Analog Frequency Command for Reverse Run)
0: Negative frequency is not valid. Forward and reverse run is controlled by digital keypad or external terminal.
1: Neagtive frequency is valid. Positive frequency = forward run; negative frequency = reverse run. Direction can not be switched by digital keypad or external teriminal control.

Pr.03-11 Analog Input Gain (AVI)= 100%

Diagram 15

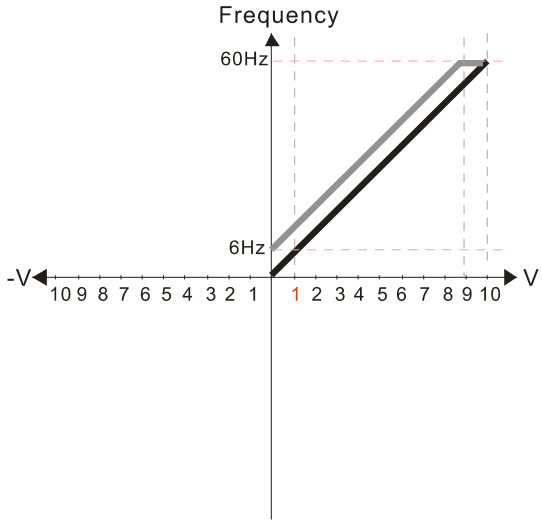

Pr.03-03=-10%

Pr.03-07~03-09 (Positive/Negative Bias Mode)
0: No bias
1: Lower than or equal to bias
2: Greater than or equal to bias
3: The absolute value of the bias voltage while serving as the center
4: Serve bias as the center

Pr.03-10 (Analog Frequency Command for Reverse Run)
0: Negative frequency is not valid. Forward and reverse run is controlled by digital keypad or external terminal.
1: Neagtive frequency is valid. Positive frequency = forward run; negative frequency = reverse run. Direction can not be switched by digital keypad or external teriminal control.

Pr.03-11 Analog Input Gain (AVI) = 100%

Diagram 16

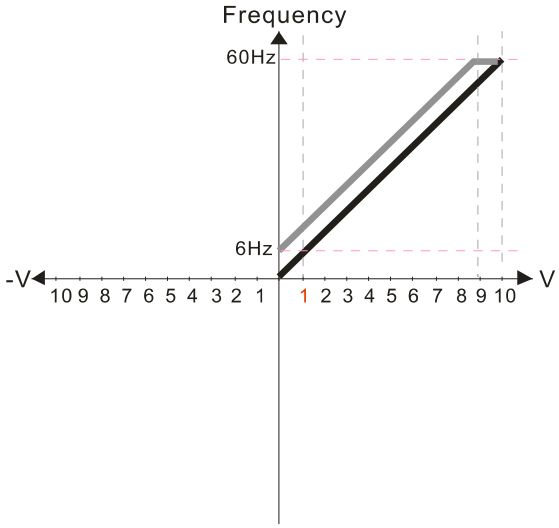

Pr.03-03=-10%

Pr.03-07~03-09 (Positive/Negative Bias Mode)

0: No bias
1: Lower than or equal to bias
2: Greater than or equal to bias
3: The absolute value of the bias voltage while serving as the center
4: Serve bias as the center

Pr.03-10 (Analog Frequency Command for Reverse Run)

0: Negative frequency is not valid. Forward and reverse run is controlled by digital keypad or external terminal.
1: Neagtive frequency is valid. Positive frequency = forward run; negative frequency = reverse run. Direction can not be switched by digital keypad or external teriminal control.

Pr.03-11 Analog Input Gain (AVI) = 100%

Diagram 17

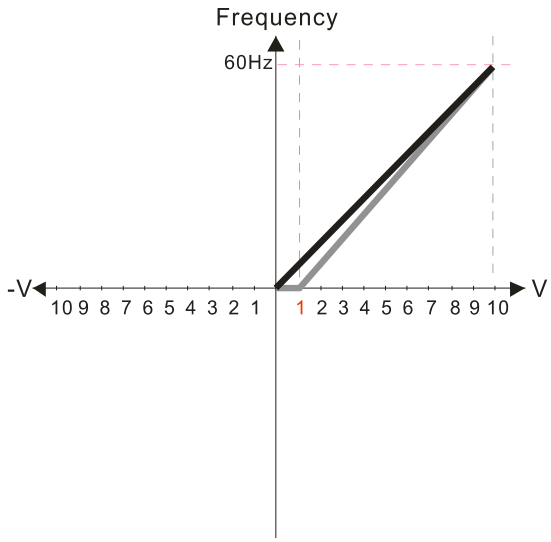

Pr.03-03=10%

Pr.03-07~03-09 (Positive/Negative Bias Mode)

0: No bias
1: Lower than or equal to bias
2: Greater than or equal to bias
3: The absolute value of the bias voltage while serving as the center
4: Serve bias as the center

Pr.03-10 (Analog Frequency Command for Reverse Run)

0: Negative frequency is not valid. Forward and reverse run is controlled by digital keypad or external terminal.
1: Neagtive frequency is valid. Positive frequency = forward run; negative frequency = reverse run. Direction can not be switched by digital keypad or external teriminal control.

Pr.03-11 Analog Input Gain (AVI)= 111.1%

10/9=111.1%

Diagram 18

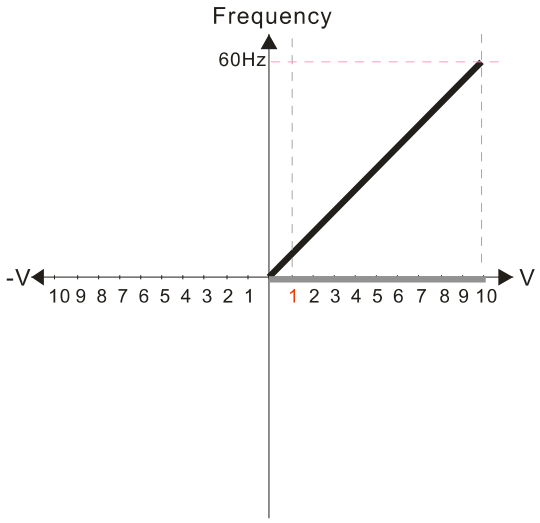

Pr.03-03=10%

Pr.03-07~03-09 (Positive/Negative Bias Mode)

0: No bias
1: Lower than or equal to bias
2: Greater than or equal to bias
3: The absolute value of the bias voltage while serving as the center
4: Serve bias as the center

Pr.03-10 (Analog Frequency Command for Reverse Run)

0: Negative frequency is not valid. Forward and reverse run is controlled by digital keypad or external terminal.
1: Neagtive frequency is valid. Positive frequency = forward run; negative frequency = reverse run. Direction can not be switched by digital keypad or external teriminal control.

Pr.03-11 Analog Input Gain (AVI)=111.1%

10/9 =111.1%

Diagram 19

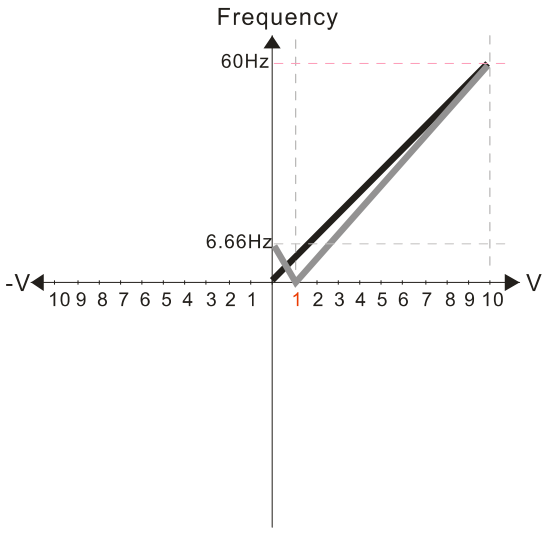

Pr.03-03=10%

Pr.03-07~03-09 (Positive/Negative Bias Mode)

0: No bias
1: Lower than or equal to bias
2: Greater than or equal to bias
3: The absolute value of the bias voltage while serving as the center
4: Serve bias as the center

Pr.03-10 (Analog Frequency Command for Reverse Run)

0: Negative frequency is not valid. Forward and reverse run is controlled by digital keypad or external terminal.
1: Neagtive frequency is valid. Positive frequency = forward run; negative frequency = reverse run. Direction can not be switched by digital keypad or external teriminal control.

Pr.03-11 Analog Input Gain (AVI) = 111.1%
10/9 =111.1%

Diagram 20

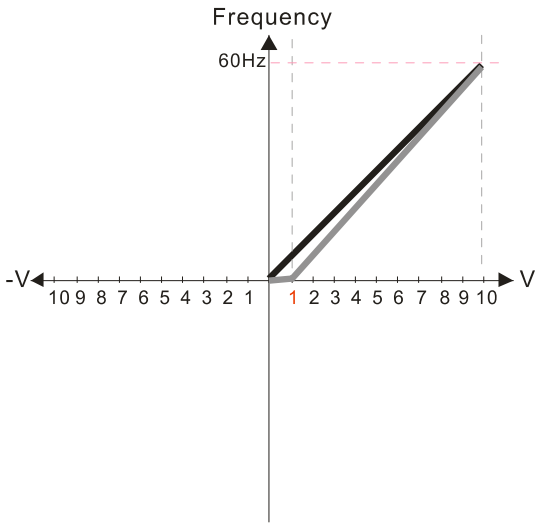

Pr.03-03=10%

Pr.03-07~03-09 (Positive/Negative Bias Mode)

0: No bias
1: Lower than or equal to bias
2: Greater than or equal to bias
3: The absolute value of the bias voltage while serving as the center
4: Serve bias as the center

Pr.03-10 (Analog Frequency Command for Reverse Run)

0: Negative frequency is not valid. Forward and reverse run is controlled by digital keypad or external terminal.
1: Neagtive frequency is valid. Positive frequency = forward run; negative frequency = reverse run. Direction can not be switched by digital keypad or external teriminal control.

Pr.03-11 Analog Input Gain (AVI) = 111.1%
10/9 =111.1%

Diagram 21

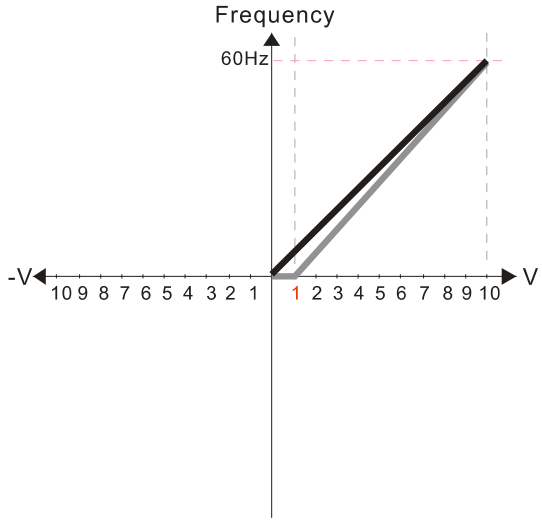

Pr.03-03=10%

Pr.03-07~03-09 (Positive/Negative Bias Mode)

0: No bias
1: Lower than or equal to bias
2: Greater than or equal to bias
3: The absolute value of the bias voltage while serving as the center
4: Serve bias as the center

Pr.03-10 (Analog Frequency Command for Reverse Run)

0: Negative frequency is not valid. Forward and reverse run is controlled by digital keypad or external terminal.
1: Neagtive frequency is valid. Positive frequency = forward run; negative frequency = reverse run. Direction can not be switched by digital keypad or external teriminal control.

Pr.03-11Analog Input Gain (AVI) = 111.1%
10/9 =111.1%

Diagram 22

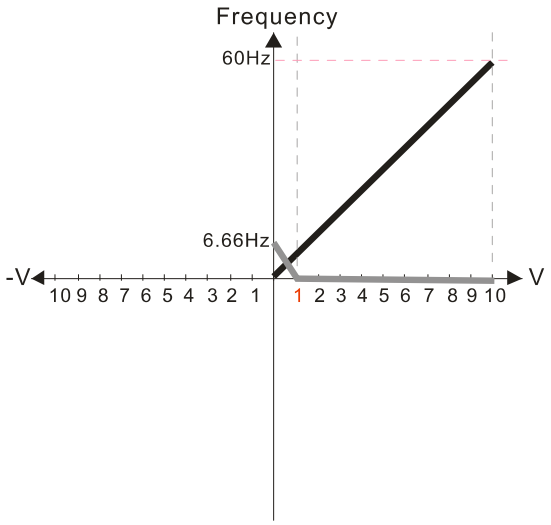

Pr.03-03=10%

Pr.03-07~03-09 (Positive/Negative Bias Mode)
0: No bias
1: Lower than or equal to bias
2: Greater than or equal to bias
3: The absolute value of the bias voltage while serving as the center
4: Serve bias as the center

Pr.03-10 (Analog Frequency Command for Reverse Run)
0: Negative frequency is not valid. Forward and reverse run is controlled by digital keypad or external terminal.
1: Neagtive frequency is valid. Positive frequency = forward run; negative frequency = reverse run. Direction can not be switched by digital keypad or external teriminal control.

Pr03-11 Analog Input Gain (AVI) = 111.1%
10/9 =111.1%

Diagram 23

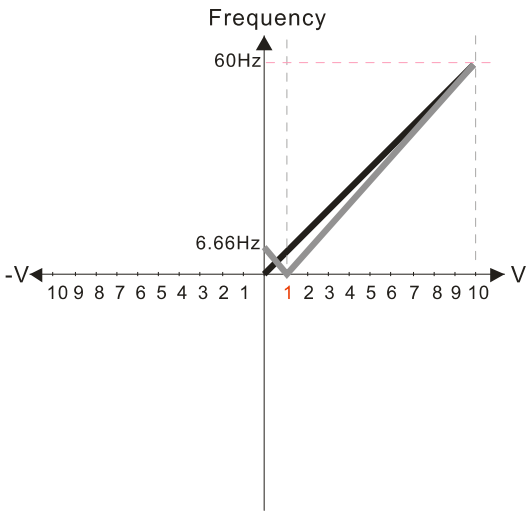

Pr.03-03=10%

Pr.03-07~03-09 (Positive/Negative Bias Mode)
0: No bias
1: Lower than or equal to bias
2: Greater than or equal to bias
3: The absolute value of the bias voltage while serving as the center
4: Serve bias as the center

Pr.03-10 (Analog Frequency Command for Reverse Run)
0: Negative frequency is not valid. Forward and reverse run is controlled by digital keypad or external terminal.
1: Neagtive frequency is valid. Positive frequency = forward run; negative frequency = reverse run. Direction can not be switched by digital keypad or external teriminal control.

Pr.03-11 Analog Input Gain (AVI) = 111.1%
10/9 =111.1%

Diagram 24

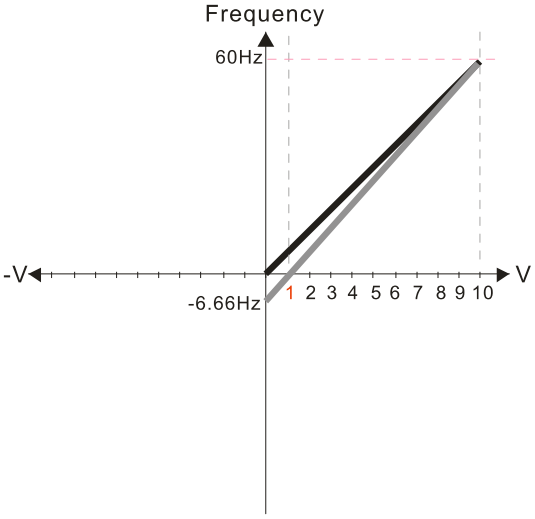

Pr.03-03=10%

Pr.03-07~03-09 (Positive/Negative Bias Mode)
0: No bias
1: Lower than or equal to bias
2: Greater than or equal to bias
3: The absolute value of the bias voltage while serving as the center
4: Serve bias as the center

Pr.03-10 (Analog Frequency Command for Reverse Run)
0: Negative frequency is not valid. Forward and reverse run is controlled by digital keypad or external terminal.
1: Neagtive frequency is valid. Positive frequency = forward run; negative frequency = reverse run. Direction can not be switched by digital keypad or external teriminal control.

Pr.03-11 Analog Input Gain (AVI) = 100%
10/9 =111.1%

Diagram 25

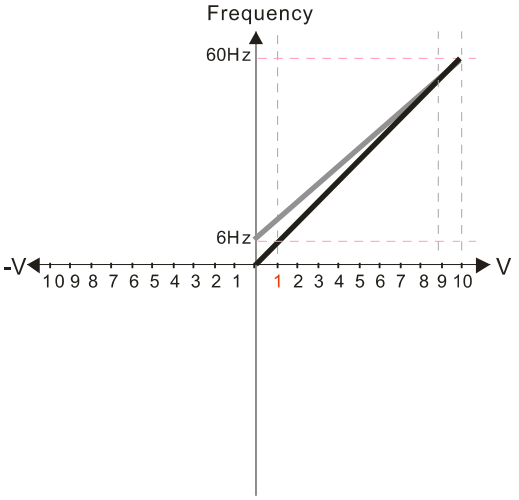

Pr.03-07~03-09 (Positive/Negative Bias Mode)

0: No bias
1: Lower than or equal to bias
2: Greater than or equal to bias
3: The absolute value of the bias voltage while serving as the center
4: Serve bias as the center

Pr.03-10 (Analog Frequency Command for Reverse Run)

0: Negative frequency is not valid. Forward and reverse run is controlled by digital keypad or external terminal.
1: Neagtive frequency is valid. Positive frequency = forward run; negative frequency = reverse run. Direction can not be switched by digital keypad or external teriminal control.

Calculate the bias:

$\frac{60\text{-}6Hz}{10V} = \frac{6\text{-}0Hz}{(0\text{-}xV)}$ $xV = \frac{10}{-9} = -1.11V$ $\therefore 03\text{-}03 = \frac{-1.11}{10} \times 100\%$

$= -11.1\%$

Calculate the gain: $03\text{-}11 = \frac{10V}{11.1V} \times 100\% = 90.0\%$

Diagram 26

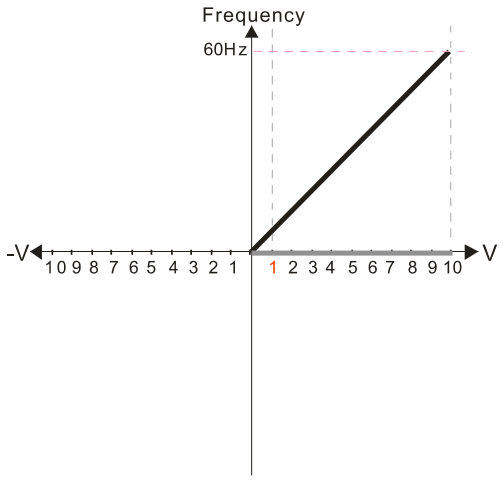

Pr.03-07~03-09 (Positive/Negative Bias Mode)

0: No bias
1: Lower than or equal to bias
2: Greater than or equal to bias
3: The absolute value of the bias voltage while serving as the center
4: Serve bias as the center

Pr.03-10 (Analog Frequency Command for Reverse Run)

0: Negative frequency is not valid. Forward and reverse run is controlled by digital keypad or external terminal.
1: Neagtive frequency is valid. Positive frequency = forward run; negative frequency = reverse run. Direction can not be switched by digital keypad or external teriminal control.

Calculate the bias:

$\frac{60\text{-}6Hz}{10V} = \frac{6\text{-}0Hz}{(0\text{-}xV)}$ $xV = \frac{10}{-9} = -1.11V$ $\therefore 03\text{-}03 = \frac{-1.11}{10} \times 100\%$

$= -11.1\%$

Calculate the gain: $03\text{-}11 = \frac{10V}{11.1V} \times 100\% = 90.0\%$

Diagram 27

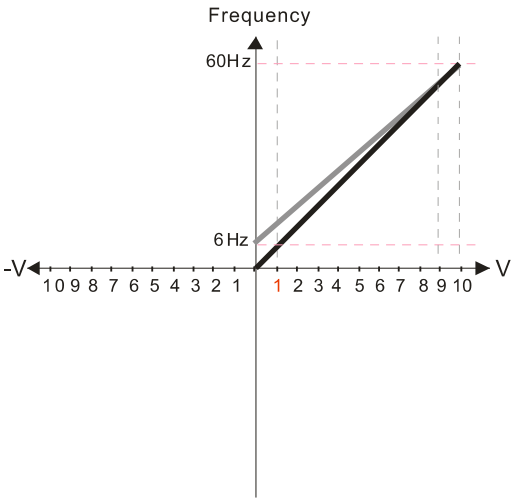

Pr.03-07~03-09 (Positive/Negative Bias Mode)

0: No bias
1: Lower than or equal to bias
2: Greater than or equal to bias
3: The absolute value of the bias voltage while serving as the center
4: Serve bias as the center

Pr.03-10 (Analog Frequency Command for Reverse Run)

0: Negative frequency is not valid. Forward and reverse run is controlled by digital keypad or external terminal.
1: Neagtive frequency is valid. Positive frequency = forward run; negative frequency = reverse run. Direction can not be switched by digital keypad or external teriminal control.

Calculate the bias:

$\frac{60\text{-}6Hz}{10V} = \frac{6\text{-}0Hz}{(0\text{-}xV)}$ $xV = \frac{10}{-9} = -1.11V$ $\therefore 03\text{-}03 = \frac{-1.11}{10} \times 100\%$

$= -11.1\%$

Calculate the gain: $03\text{-}11 = \frac{10V}{11.1V} \times 100\% = 90.0\%$

Diagram 28

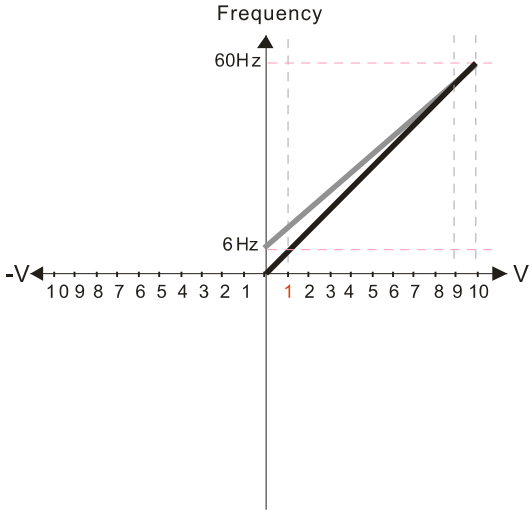

Pr.03-07~03-09 (Positive/Negative Bias Mode)

0: No bias
1: Lower than or equal to bias
2: Greater than or equal to bias
3: The absolute value of the bias voltage while serving as the center
4: Serve bias as the center

Pr.03-10 (Analog Frequency Command for Reverse Run)

0: Negative frequency is not valid. Forward and reverse run is controlled by digital keypad or external terminal.
1: Neagtive frequency is valid. Positive frequency = forward run; negative frequency = reverse run. Direction can not be switched by digital keypad or external teriminal control.

Calculate the bias:

$\frac{60\text{-}6Hz}{10V} = \frac{6\text{-}0Hz}{(0\text{-}xV)}$ $xV = \frac{10}{-9} = -1.11V$ $\therefore 03\text{-}03 = \frac{-1.11}{10} \times 100\% = -11.1\%$

Calculate the gain: $03\text{-}11 = \frac{10V}{11.1V} \times 100\% = 90.0\%$

Diagram 29

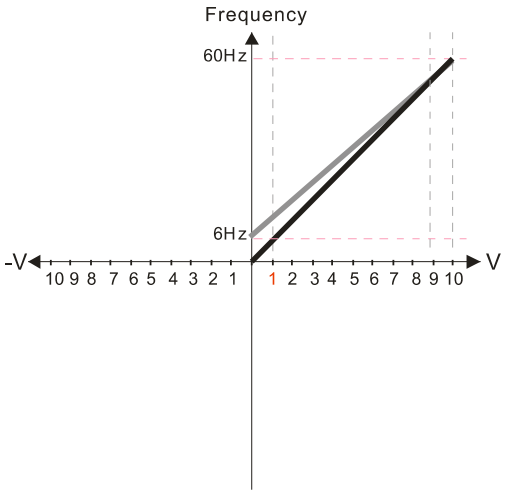

Pr.03-07~03-09 (Positive/Negative Bias Mode)

0: No bias
1: Lower than or equal to bias
2: Greater than or equal to bias
3: The absolute value of the bias voltage while serving as the center
4: Serve bias as the center

Pr.03-10 (Analog Frequency Command for Reverse Run)

0: Negative frequency is not valid. Forward and reverse run is controlled by digital keypad or external terminal.
1: Neagtive frequency is valid. Positive frequency = forward run; negative frequency = reverse run. Direction can not be switched by digital keypad or external teriminal control.

Calculate the bias:

$\frac{60\text{-}6Hz}{10V} = \frac{6\text{-}0Hz}{(0\text{-}xV)}$ $xV = \frac{10}{-9} = -1.11V$ $\therefore 03\text{-}03 = \frac{-1.11}{10} \times 100\% = -11.1\%$

Calculate the gain: $03\text{-}11 = \frac{10V}{11.1V} \times 100\% = 90.0\%$

Diagram 30

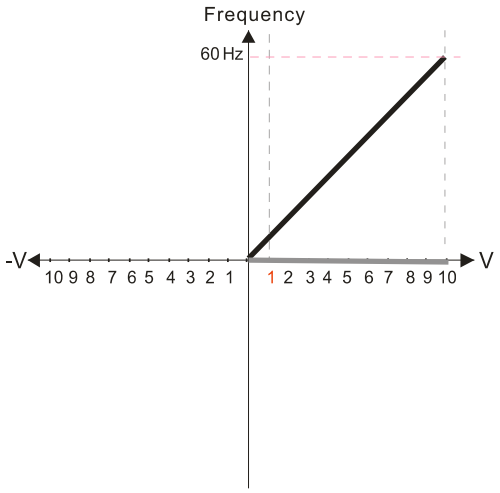

Pr.03-07~03-09 (Positive/Negative Bias Mode)

0: No bias
1: Lower than or equal to bias
2: Greater than or equal to bias
3: The absolute value of the bias voltage while serving as the center
4: Serve bias as the center

Pr.03-10 (Analog Frequency Command for Reverse Run)

0: Negative frequency is not valid. Forward and reverse run is controlled by digital keypad or external terminal.
1: Neagtive frequency is valid. Positive frequency = forward run; negative frequency = reverse run. Direction can not be switched by digital keypad or external teriminal control.

Calculate the bias:

$\frac{60\text{-}6Hz}{10V} = \frac{6\text{-}0Hz}{(0\text{-}xV)}$ $xV = \frac{10}{-9} = -1.11V$ $\therefore 03\text{-}03 = \frac{-1.11}{10} \times 100\% = -11.1\%$

Calculate the gain: $03\text{-}11 = \frac{10V}{11.1V} \times 100\% = 90.0\%$

Diagram 31

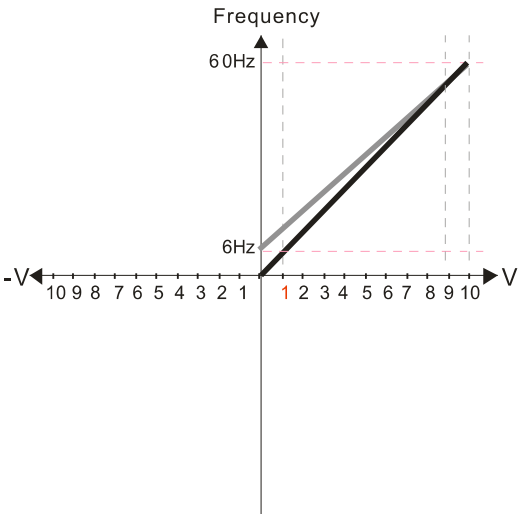

Pr.03-07~03-09 (Positive/Negative Bias Mode)
0: No bias
1: Lower than or equal to bias
2: Greater than or equal to bias
3: The absolute value of the bias voltage while serving as the center
4: Serve bias as the center

Pr.03-10 (Analog Frequency Command for Reverse Run)
0: Negative frequency is not valid. Forward and reverse run is controlled by digital keypad or external terminal.
1: Neagtive frequency is valid. Positive frequency = forward run; negative frequency = reverse run. Direction can not be switched by digital keypad or external teriminal control.

Calculate the bias:

$$\frac{60\text{-}6\text{Hz}}{10\text{V}} = \frac{6\text{-}0\text{Hz}}{(0\text{-}x\text{V})} \quad x\text{V} = \frac{10}{-9} = -1.11\text{V} \quad \therefore 03\text{-}03 = \frac{-1.11}{10} \times 100\% = -11.1\%$$

Calculate the gain: $03\text{-}11 = \frac{10\text{V}}{11.1\text{V}} \times 100\% = 90.0\%$

Diagram 32

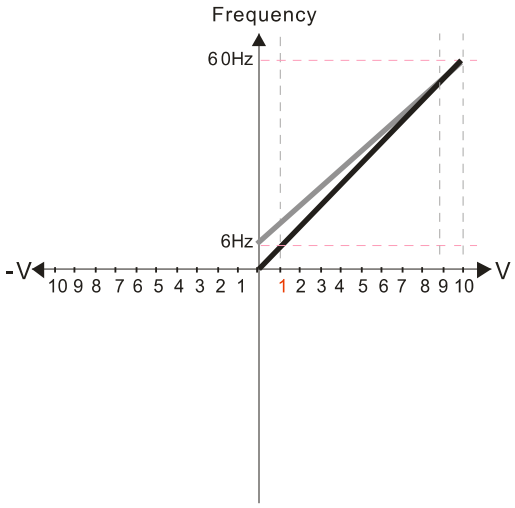

Pr.03-07~03-09 (Positive/Negative Bias Mode)
0: No bias
1: Lower than or equal to bias
2: Greater than or equal to bias
3: The absolute value of the bias voltage while serving as the center
4: Serve bias as the center

Pr.03-10 (Analog Frequency Command for Reverse Run)
0: Negative frequency is not valid. Forward and reverse run is controlled by digital keypad or external terminal.
1: Neagtive frequency is valid. Positive frequency = forward run; negative frequency = reverse run. Direction can not be switched by digital keypad or external teriminal control.

Calculate the bias:

$$\frac{60\text{-}6\text{Hz}}{10\text{V}} = \frac{6\text{-}0\text{Hz}}{(0\text{-}x\text{V})} \quad x\text{V} = \frac{10}{-9} = -1.11\text{V} \quad \therefore 03\text{-}03 = \frac{-1.11}{10} \times 100\% = -11.1\%$$

Calculate the gain: $03\text{-}11 = \frac{10\text{V}}{11.1\text{V}} \times 100\% = 90.0\%$

Diagram 33

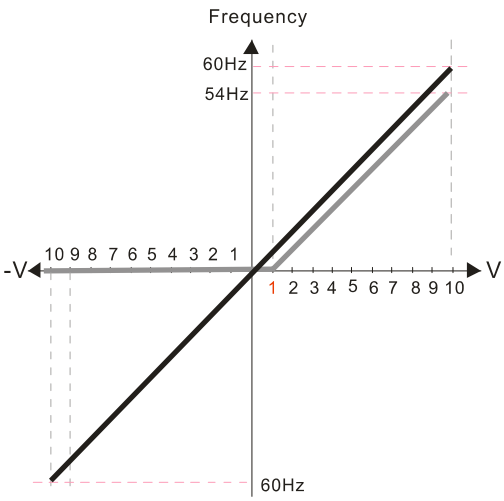

Pr.00-21=0 (Digital keypad control and run in FWD direction)
Pr.03-05 Analog Positive Voltage Input Bias (AUI) = 10%
Pr.03-07~03-09 (Positive/Negative Bias Mode)
0: No bias
1: Lower than or equal to bias
2: Greater than or equal to bias
3: The absolute value of the bias voltage while serving as the center
4: Serve bias as the center

Pr.03-13 Analog Positive Input Gain (AUI) = 100%
Pr.03-14 Analog Positive Input Gain (AUI) = 100%

Diagram 34

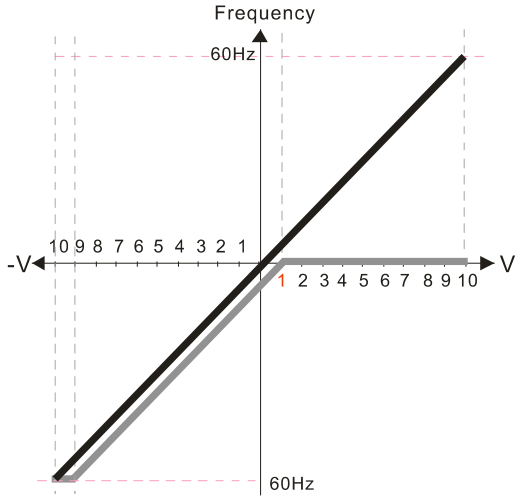

Pr.00-21=0 (Digital keypad control and run in FWD direction)
Pr.03-05 Analog Positive Voltage Input Bias (AUI) = 10%
Pr.03-07~03-09 (Positive/Negative Bias Mode)
0: No bias
1: Lower than or equal to bias
2: Greater than or equal to bias
3: The absolute value of the bias voltage while serving as the center
4: Serve bias as the center

Pr.03-13 Analog Positive Input Gain (AUI) = 100%
Pr.03-14 Analog Positive Input Gain (AUI) = 100%

Diagram 35

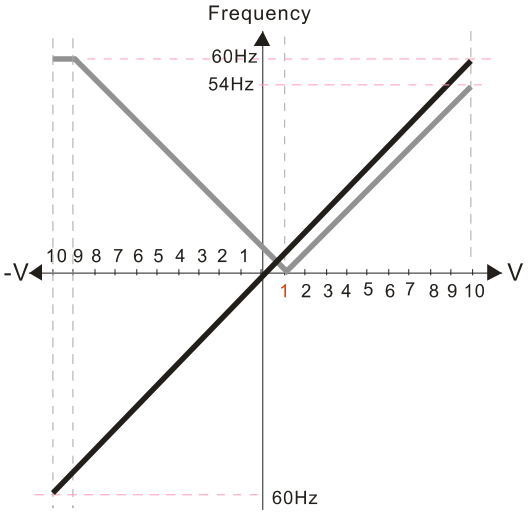

Pr.00-21=0 (Digital keypad control and run in FWD direction)
Pr.03-05 Analog Positive Voltage Input Bias (AUI) = 10%
Pr.03-07~03-09 (Positive/Negative Bias Mode)
0: No bias
1: Lower than or equal to bias
2: Greater than or equal to bias
3: The absolute value of the bias voltage while serving as the center
4: Serve bias as the center

Pr.03-13 Analog Positive Input Gain (AUI) = 100%
Pr.03-14 Analog Positive Input Gain (AUI) = 100%

Diagram 36

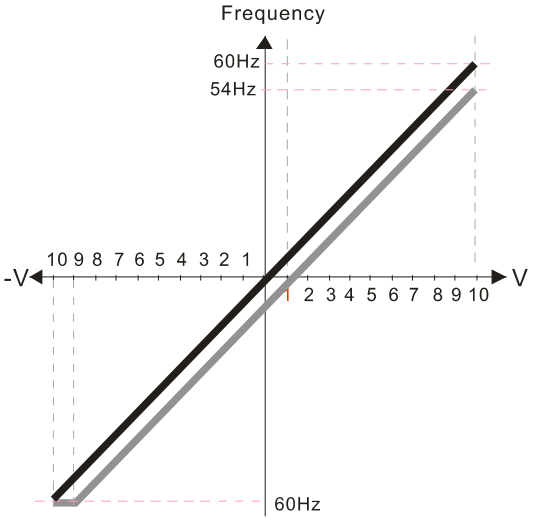

Pr.00-21=0 (Digital keypad control and run in FWD direction)
Pr.03-05 Analog Positive Voltage Input Bias (AUI) = 10%
Pr.03-07~03-09 (Positive/Negative Bias Mode)
0: No bias
1: Lower than or equal to bias
2: Greater than or equal to bias
3: The absolute value of the bias voltage while serving as the center
4: Serve bias as the center

Pr.03-13 Analog Positive Input Gain (AUI) = 100%
Pr.03-14 Analog Positive Input Gain (AUI) = 100%

Diagram 37

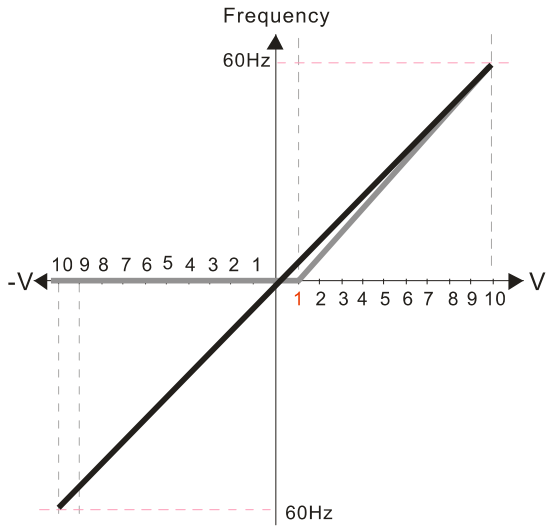

Pr.00-21=0 (Digital keypad control and run in FWD direction)
Pr.03-05 Analog Positive Voltage Input Bias (AUI) = 10%
Pr.03-07~03-09 (Positive/Negative Bias Mode)
0: No bias
1: Lower than or equal to bias
2: Greater than or equal to bias
3: The absolute value of the bias voltage while serving as the center
4: Serve bias as the center

Pr.03-13 Analog Positive Input Gain (AUI) = 111.1%
(10/9)*100% = 111.1%
Pr.03-14 Analog Positive Input Gain (AUI) = 100%

Diagram 38

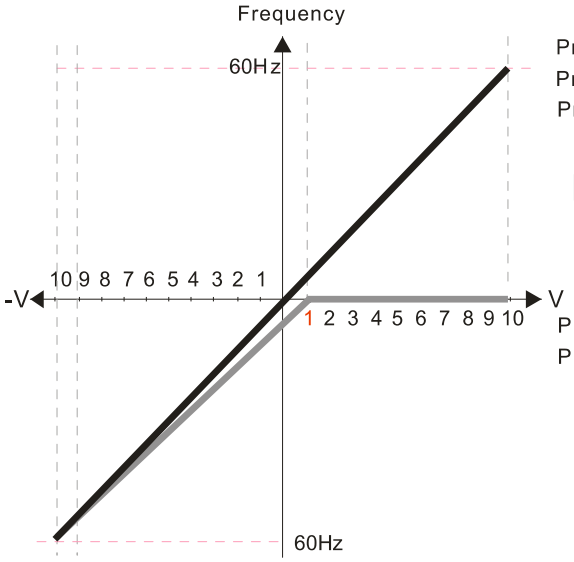

Pr.00-21=0 (Digital keypad control and run in FWD direction)
Pr.03-05 Analog Positive Voltage Input Bias (AUI) = 10%
Pr.03-07~03-09 (Positive/Negative Bias Mode)
0: No bias
1: Lower than or equal to bias
2: Greater than or equal to bias
3: The absolute value of the bias voltage while serving as the center
4: Serve bias as the center

Pr.03-13 Analog Positive Input Gain (AUI) = 100%
Pr.03-14 Analog Positive Input Gain (AUI) = 90.0%
(10/11)*100% = 90.9%

Diagram 39

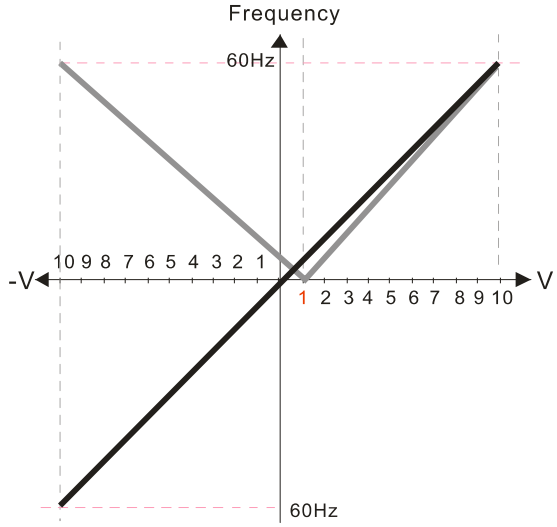

Pr.00-21=0 (Digital keypad control and run in FWD direction)
Pr.03-05 Analog Positive Voltage Input Bias (AUI) = 10%
Pr.03-07~03-09 (Positive/Negative Bias Mode)
0: No bias
1: Lower than or equal to bias
2: Greater than or equal to bias
3: The absolute value of the bias voltage while serving as the center
4: Serve bias as the center

Pr.03-13 Analog Positive Input Gain (AUI) = 111.1%
(10/9)*100% = 111.1%
Pr.03-14 Analog Positive Input Gain (AUI) = 90.0%
(10/11)*100% = 90.9%

Diagram 40

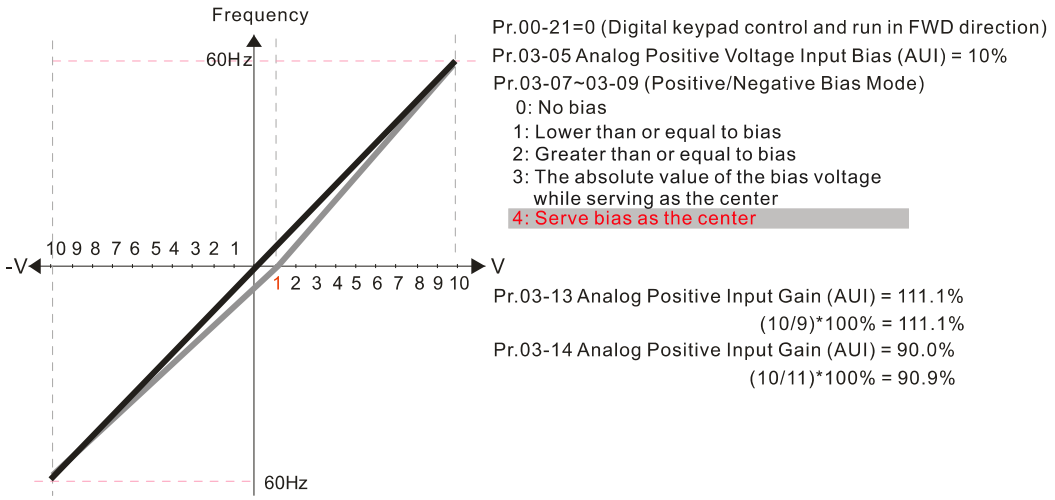

03-10 Reverse Setting when Analog Signal Input is Negative Frequency

Default: 0

Settings 0: Negative frequency is not allowed. The digital keypad or external terminal controls the forward and reverse direction.

1: Negative frequency is allowed. Positive frequency = run in forward direction; negative frequency = run in reverse direction. The digital keypad or external terminal control cannot switch the running direction.

- Use this parameter only for AVI or ACI analog input.
- Requirements for negative frequency (reverse running)
  1. Pr.03-10 = 1
  2. Bias mode = Bias serves as the center
  3. Corresponded analog input gain < 0 (negative); this makes the input frequency negative.
- In using the additional analog input function (Pr.03-18 = 1), when the analog signal is negative after the addition, you can set this parameter to allow or not allow the reverse running. The result after adding depends on the “Requirements for negative frequency (reverse running)”.

03-11 AVI Analog Input Gain
03-12 ACI Analog Input Gain
03-13 AUI Analog Positive Input Gain
03-14 AUI Analog Negative Input Gain

Default: 100.0

Settings -500.0–500.0%

- Pr.03-03–Pr.03-14 are used when the Frequency command source is the analog voltage or current signal.

03-15 AVI Analog Input Filter Time
03-16 ACI Analog Input Filter Time
03-17 AUI Analog Input Filter Time

Default: 0.01

Settings 0.00–20.00 sec.

- Analog signals, such as those entering AVI, ACI and AUI, are commonly affected by interference

that affects the stability of the analog control. Use the Input Noise Filter to create a more stable system.

- When the time constant setting is too large, the control is stable but the control response is slow. When the time constant setting is too small, the control response is faster but the control may be unstable. For optimal setting, adjust the setting based on the control stability or the control response.

03-18 Analog Input Addition Function

Default: 0

Settings 0: Disable (AVI, ACI, AUI)
1: Enable

- When Pr.03-18 = 1:
  Example 1: Pr.03-00 = Pr.03-01=1, Frequency command= AVI+ACI
  Example 2: Pr.03-00 = Pr.03-01 = Pr.03-02 = 1, Frequency command = AVI+ACI+AUI
  Example 3: Pr.03-00 = Pr.03-02=1, Frequency command = AVI+AUI
  Example 4: Pr.03-01 = Pr.03-02=1, Frequency command = ACI+AUI
- When Pr.03-18=0 and the analog input selection settings (Pr.03-00, Pr.03-01 and Pr.03-02) are the same, AVI has priority over ACI and AUI (AVI > ACI > AUI).

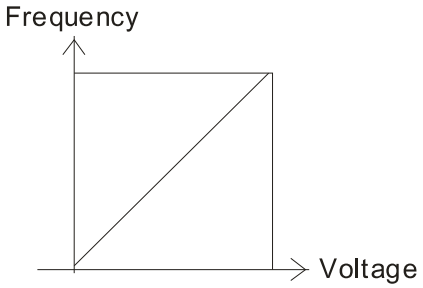

$$Fcmd=[(ay \pm bias)*gain]* \frac{Fmax(01\text{-}00)}{10V \text{ or } 16mA \text{ or } 20mA}$$

Fcmd: the corresponding frequency of 10V or 20mA

ay : 0~10V, 4~20mA, 0~20mA
bias : Pr.03-03,Pr. 03-04, Pr.03-05
gain : Pr.03-11, Pr.03-12, Pr.03-13, Pr.03-14

03-19 Signal Loss Selection for the Analog Input 4–20 mA

Default: 0

Settings 0: Disable
1: Continue operation at the last frequency
2: Decelerate to 0 Hz
3: Stop immediately and display “ACE”

- Determines the treatment when the 4–20 mA signal is lost [AVIc (Pr.03-28 = 2) or ACIc (Pr.03-29 = 0)].
- When Pr.03-28 ≠ 2, the voltage input to AVI terminal is 0–10 V or 0–20 mA, and Pr.03-19 is invalid.
- When Pr.03-29 ≠ 0, the voltage input to ACI terminal is 0–10 V or 0–20 mA, and the Pr.03-19 is invalid.
- When the setting is 1 or 2, the keypad displays the warning code “ANL”. It keeps blinking until the ACI signal is recovered.
- When the drive stops, the condition that causes the warning does not exist, so the warning automatically disappears.

03-20 AFM1 Multi-function Output 1

Default: 0

03-23 AFM2 Multi-function Output 2

Default: 0

Settings 0–25

Function Chart

Settings	Functions	Descriptions
0	Output frequency (Hz)	Maximum frequency Pr.01-00 is processed as 100%.
1	Frequency command (Hz)	Maximum frequency Pr.01-00 is processed as 100%.
2	Motor speed (Hz)	Maximum frequency Pr.01-00 is processed as 100%.
3	Output current (rms)	(2.5 × drive rated current) is processed as 100%
4	Output voltage	(2 × motor rated voltage) is processed as 100%
5	DC bus Voltage	450 V (900 V)=100%
6	Power factor	-1.000–1.000=100%
7	Power	(2 × drive rated power) is processed as 100%
8	Output torque	Full-load torque = 100%
9	AVI	0–10 V = 0–100%
10	ACI	4–20 mA = 0–100%
11	AUI	-10–10 V = 0–100%
12	Iq current command	(2.5 × drive rated current) is processed as 100%
13	Iq feedback value	(2.5 × drive rated current) is processed as 100%
14	Id current command	(2.5 × drive rated current) is processed as 100%
15	Id feedback value	(2.5 × drive rated current) is processed as 100%
18	Torque command	Motor rated torque = 100%
19	PG2 frequency command	Maximum operation frequency (Pr.01-00) is processed as 100%.
20	CANopen analog output	For CANopen communication analog output Terminal / Address AFM1 / 2026-A1 AFM2 / 2026-A2 AO10 / 2026-AB AO11 / 2026-AC
21	RS-485 analog output	For RS-485 (InnerCOM / Modbus) control analog output Terminal / Address AFM1 / 26A0H AFM2 / 26A1H AO10 / 26AAH AO11 / 26ABH

Settings	Functions	Descriptions
22	Communication card analog output	For communication analog output (CMC-EIP01, CMC-PN01, CMC-DN01) Terminal / Address AFM1 / 26A0H AFM2 / 26A1H AO10 / 26AAH AO11 / 26ABH
23	Constant voltage output	Pr.03-32 and Pr.03-33 control the voltage output level. 0–100% of Pr.03-32 corresponds to 0–10 V of AFM1.
25	CANopen and RS-485 analog output	For CANopen and InnerCOM control output

03-21 AFM1 Analog Output Gain 1

Default: 100.0

03-24 AFM2 Analog Output Gain 2

Default: 100.0

Settings 0.0–500.0%

Adjusts the voltage level outputted to the analog meter from the analog signal (Pr.03-20) output terminal AFM of the drive.

03-22 AFM1 Analog Output 1 in REV Direction

Default: 0

03-25 AFM2 Analog Output 2 in REV Direction

Default: 0

Settings 0: Absolute value in output voltage
1: Reverse output 0 V; forward output 0–10 V
2: Reverse output 5–0 V; forward output 5–10 V

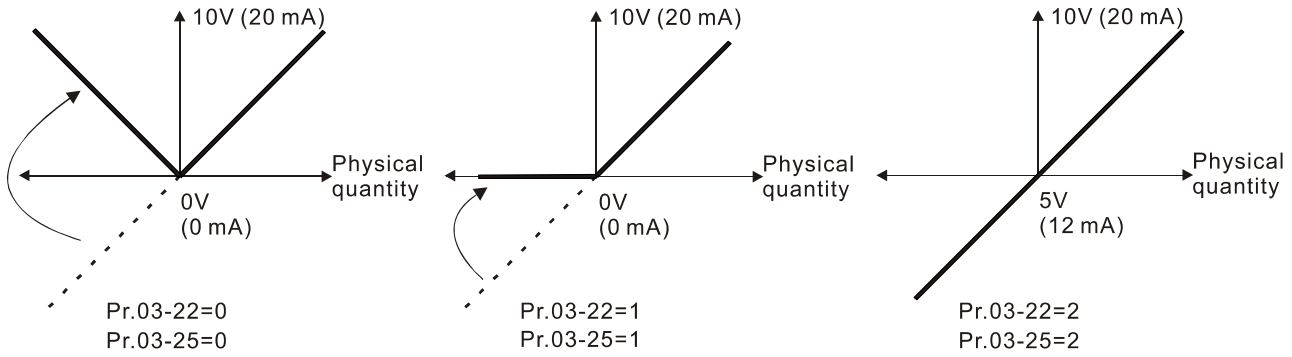

Selections for the analog output direction

03-27 AFM2 Output Bias

Default: 0.00

Settings -100.00–100.00%

Example 1, AFM2 0–10 V is set to the output frequency, the output equation is:
10 V × (output frequency / Pr.01-00) × Pr.03-24 + 10 V × Pr.03-27

- Example 2, AFM2 0–20 mA is set to the output frequency, the output equation is:
  20 mA × (output frequency / Pr.01-00) × Pr.03-24 + 20 mA × Pr.03-27
- Example 3, AFM2 4–20 mA is set to the output frequency, the output equation is:
  4 mA + 16 mA × (output frequency / Pr.01-00) × Pr.03-24 + 16 mA × Pr.03-27
- This parameter sets the corresponding voltage of the analog output 0.

03-28 AVI Terminal Input Selection

Default: 0

Settings 0: 0–10 V
1: 0–20 mA
2: 4–20 mA

03-29 ACI Terminal Input Selection

Default: 0

Settings 0: 4–20 mA
1: 0–10 V
2: 0–20 mA

- When you change the input mode, verify that the external terminal switch (SW3, SW4) corresponds to the setting for Pr.03-28–Pr.03-29.
- When you change the setting, proportion to the corresponding AVI and ACI will change to default.

03-30 PLC Analog Output Terminal Status

Default: Read only

Settings Monitor the status of the PLC analog output terminals

- Pr.03-30 displays the external multi-function output terminal that used by PLC.

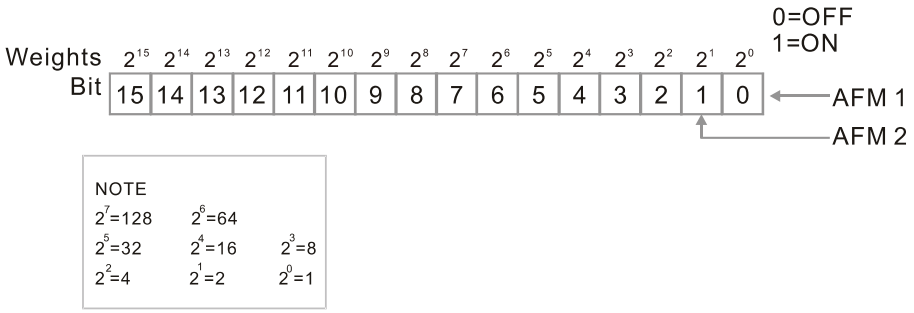

- For Example:
  When Pr.03-30 displays 0002h (hex), it means that AFM2 is used by PLC.

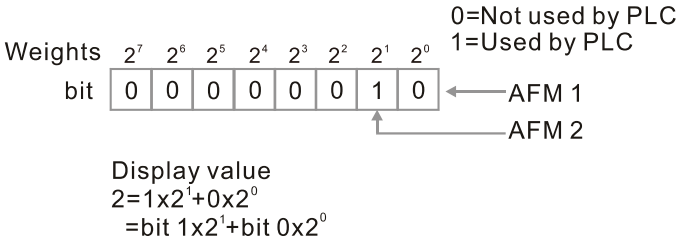

03-31 AFM2 Output Selection

Default: 0

Settings 0: 0–20 mA output
1: 4–20 mA output

03-32 AFM1 DC Output Setting Level

03-33 AFM2 DC Output Setting Level

Default: 0.00

Settings 0.00–100.00%

03-35 AFM1 Output Filter Time

03-36 AFM2 Output Filter Time

Default: 0.01

Settings 0.00–20.00 sec.

03-44 Multi-function Output (MO) by AI Level Source

Default: 0

Settings 0: AVI
1: ACI
2: AUI

03-45 AI Upper Level (MO)

Default: 50.00

Settings -100.00–100.00%

03-46 AI Lower Level (MO)

Default: 10.00

Settings -100.00–100.00%

- Use this function (Pr.03-44) with the multi-function output setting 67 (analog input level reached). The MO is active when the AI input level is higher than the Pr.03-45. The MO is disabled when the AI input is lower than the Pr.03-46.
- When setting levels, Pr.03-45 AI upper level must be higher than Pr.03-46 AI lower level.

03-50 Analog Input Curve Selection

Default: 0

Settings 0: Normal Curve
1: Three-point curve of AVI
2: Three-point curve of ACI
3: Three-point curve of AVI & ACI
4: Three-point curve of AUI
5: Three-point curve of AVI & AUI
6: Three-point curve of ACI & AUI
7: Three-point curve of AVI & ACI & AUI

- Sets the calculation method for analog input.
- When Pr.03-50 = 0, all analog input signal is calculated by bias and gain.
- When Pr.03-50 = 1, AVI calculates by frequency and voltage / current (Pr.03-51–03-56), other

analog input signal calculates by bias and gain.

- When Pr.03-50 = 2, ACI consulates by frequency and voltage / current (Pr.03-57–03-62), other analog input signal calculates by bias and gain.
- When Pr.03-50 = 3, AVI and ACI calculate by frequency and voltage/ current (Pr.03-51–03-62), other analog input signal calculates by bias and gain.
- When Pr.03-50 = 4, AVI calculates by frequency and voltage / current (Pr.03-63–03-74), other analog input signal calculates by bias and gain.
- When Pr.03-50 = 5, AVI and AUI calculate by frequency and voltage / current (Pr.03-51–03-56 and 03-63–03-74), other analog input signal calculates by bias and gain.
- When Pr.03-50 = 6, ACI and AVI calculate by frequency and voltage / current (Pr.03-57–03-74), other analog input signal calculates by bias and gain.
- When Pr.03-50 = 7, all analog input signal calculate by frequency and voltage / current (Pr.03-51–03-74).

03-51 AVI Lowest Point

Default: 0.00 / 0.00 / 4.00

Settings Pr.03-28 = 0, 0.00–10.00 V
Pr.03-28 = 1, 0.00–20.00 mA
Pr.03-28 = 2, 4.00–20.00 mA

03-52 AVI Proportional Lowest Point

Default: 0.00

Settings -100.00–100.00%

03-53 AVI Mid-Point

Default: 5.00 / 10.00 / 12.00

Settings Pr.03-28 = 0, 0.00–10.00 V
Pr.03-28 = 1, 0.00–20.00 mA
Pr.03-28 = 2, 4.00–20.00 mA

03-54 AVI Proportional Mid-Point

Default: 50.00

Settings -100.00–100.00%

03-55 AVI Highest Point

Default: 10.00 / 20.00 / 20.00

Settings Pr.03-28 = 0, 0.00–10.00 V
Pr.03-28 = 1, 0.00–20.00 mA
Pr.03-28 = 2, 4.00–20.00 mA

03-56 AVI Proportional Highest Point

Default: 100.00

Settings -100.00–100.00%

- When Pr.03-28 = 0, the AVI setting is 0–10 V and the unit is in voltage (V).

When Pr.03-28 ≠ 0, the AVI setting is 0–20 mA or 4–20 mA and the unit is in current (mA).

- When you set the analog input AVI to frequency command, 100% corresponds to Fmax (Pr.01-00 Maximum Operation Frequency).
- The requirement for these three parameters (Pr.03-51, Pr.03-53 and Pr.03-55) is Pr.03-51 < Pr.03-53 < Pr.03-55. The values for three proportional points (Pr.03-52, Pr.03-54 and Pr.03-56) have no limits. Values between two points are calculated by a linear equation. The ACI and AUI are same as AVI.
- The output percentage 0% when the AVI input value is lower than the lowest point setting. Example: Pr.03-51 = 1 V; Pr.03-52 = 10%. The output is 0 % when AVI input is lower than 1V. If the AVI input varies between 1V and 1.1V, the drive's output frequency is between 0% and 10%.

Pr.03-51=0V; Pr.03-52=0%
Pr.03-53=5V; Pr.03-54=50%
Pr.03-55=10V; Pr.03-56=100%

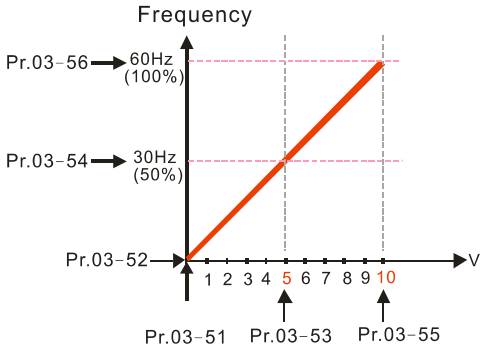

Pr.03-51=0V; Pr.03-52=100%
Pr.03-53=5V; Pr.03-54=50%
Pr.03-55=10V; Pr.03-56=0%

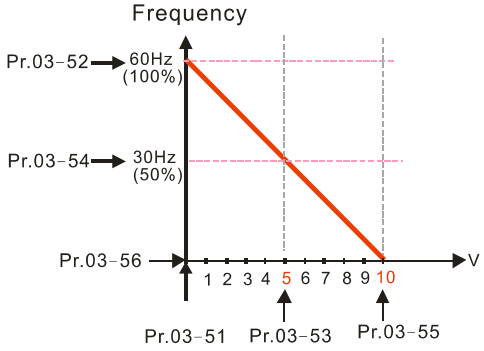

Pr.03-51=1V; Pr.03-52=10%
Pr.03-53=5V; Pr.03-54=50%
Pr.03-55=10V; Pr.03-56=100%

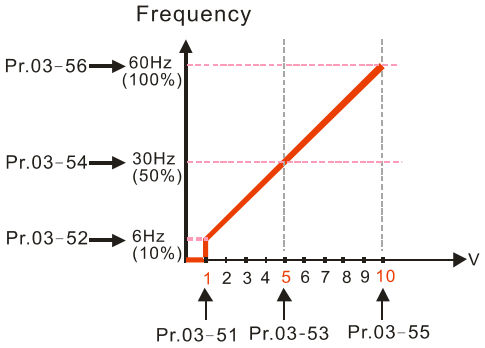

Pr.03-51=1V; Pr.03-52=10%
Pr.03-53=5V; Pr.03-54=50%
Pr.03-55=9V; Pr.03-56=100%

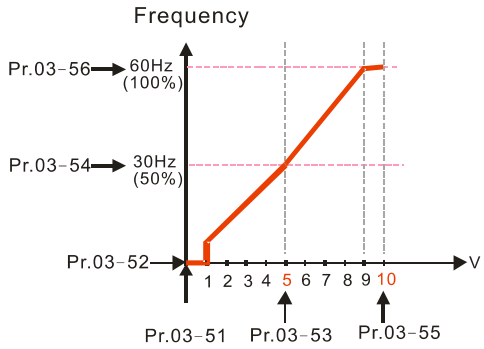

Pr.03-51=0V; Pr.03-52=10%
Pr.03-53=5V; Pr.03-54=50%
Pr.03-55=10V; Pr.03-56=100%

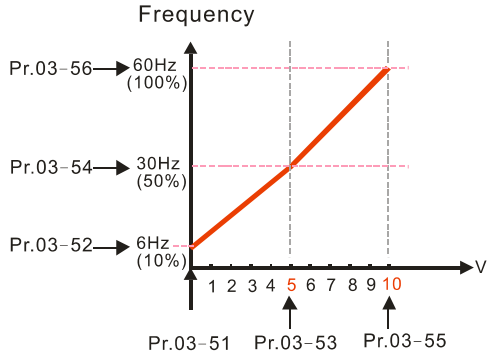

Pr.03-51=1V; Pr.03-52=0%
Pr.03-53=5V; Pr.03-54=50%
Pr.03-55=10V; Pr.03-56=100%

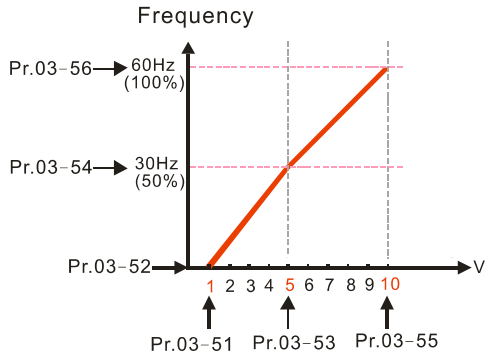

03-57 ACI Lowest Point

Default:
4.00 / 0.00 / 0.00

Settings Pr.03-29 = 0, 4.00–20.0 mA
Pr.03-29 = 1, 0.00–10.00 V
Pr.03-29 = 2, 0.00–20.00 mA

03-58 ACI Proportional Lowest Point

Default: 0.00

Settings -100.00–100.00%

03-59 ACI Mid-Point

Default:
12.00 / 5.00 / 10.00

Settings Pr.03-29 = 0, 4.00–20.00 mA
Pr.03-29 = 1, 0.00–10.00 V
Pr.03-29 = 2, 0.00–20.00 mA

03-60 ACI Proportional Mid-Point

Default: 50.00

Settings -100.00–100.00%

03-61 ACI Highest Point

Default:
20.00 / 10.00 / 20.00

Settings Pr.03-29 = 0, 4.00–20.00 mA
Pr.03-29 = 1, 0.00–10.00 V
Pr.03-29 = 2, 0.00–20.00 mA

03-62 ACI Proportional Highest Point

Default: 100.00

Settings -100.00–100.00%

- When Pr.03-29 = 1, the ACI setting is 0–10 V and the unit is in voltage (V).
  When Pr.03-29 ≠ 1, the ACI setting is 0–20 mA or 4–20 mA and the unit is in current (mA).
- When you set the analog input ACI to the Frequency command, 100% corresponds to Fmax (Pr.01-00 Maximum Operation Frequency).
- The requirement for these three parameters (Pr.03-57, Pr.03-59 and Pr.03-61) is Pr.03-57 < Pr.03-59 < Pr.03-61. The values for three proportional points (Pr.03-58, Pr.03-60 and Pr.03-62) have no limits. There is a linear calculation between two points.
- The output percentage becomes 0% when the ACI input value is lower than the lowest point setting.
  Example:
  Pr.03-57 = 2 mA; Pr.03-58 = 10%, then the output becomes 0% when the AVI input is ≤ 2 mA. If the ACI input swings between 2 mA and 2.1 mA, the drive's output frequency oscillates between 0% and 10%.

03-63 Positive AUI Voltage Lowest Point

Default: 0.00

Settings 0.00–10.00 V

03-64 Positive AUI Voltage Proportional Lowest Point

Default: 0.00

Settings -100.00–100.00%

03-65 Positive AUI Voltage Mid-Point

Default: 5.00

Settings 0.00–10.00 V

03-66 Positive AUI Voltage Proportional Mid-Point

Default: 50.00

Settings -100.00–100.00%

03-67 Positive AUI Voltage Highest Point

Default: 10.00

Settings 0.00–10.00 V

03-68 Positive AUI Voltage Proportional Highest Point

Default: 100.00

Settings -100.00–100.00%

- When you set the positive voltage AUI to the Frequency command, 100% corresponds to Fmax (Pr.01-00 Maximum Operation Frequency) and the motor runs in the forward direction.
- The requirement for these three parameters (Pr.03-63, Pr.03-65 and Pr.03-67) is Pr.03-63 < Pr.03-65 < Pr.03-67. The values for three proportional points (Pr.03-64, Pr.03-66 and Pr.03-68) have no limits. There is a linear calculation between two points.
- The output percentage becomes 0% when the positive voltage AUI input value is lower than the lowest point setting.

  For example:

  If Pr.03-63 = 1 V; Pr.03-64 = 10%, then the output becomes 0% when the AUI input is ≤ 1V. If the AUI input swings between 1V and 1.1V, the drive's output frequency oscillates between 0% and 10%.
- Use Pr.03-51~03-68 to set the open circuit corresponding function of analog input value and max. operation frequency (Pr.01-00), as shown in the figure below:

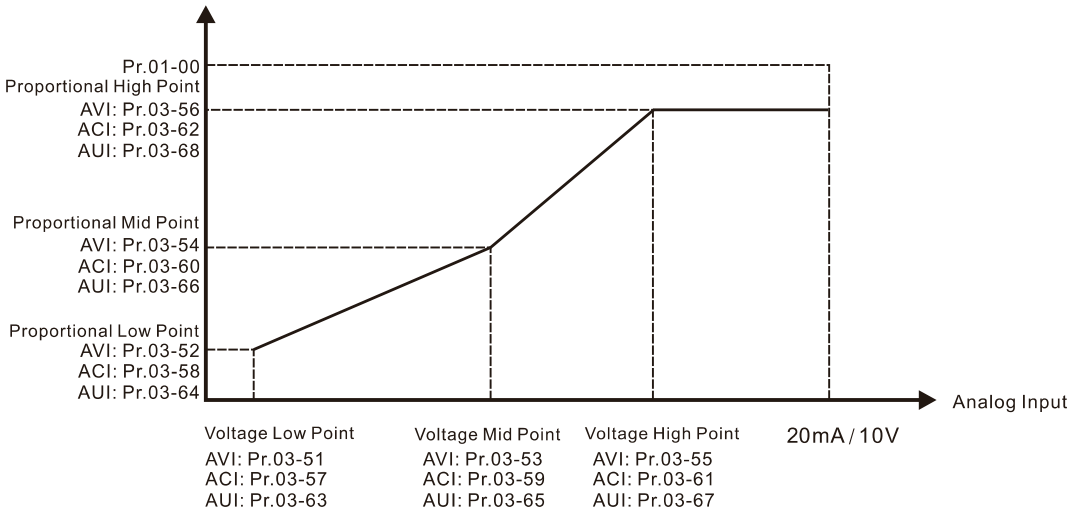

03-69 Negative AUI Voltage Highest Point

Default: 0.00

Settings -10.00–0.00 V

03-70 Negative AUI Voltage Proportional Highest Point

Default: 0.00

Settings -100.00–100.00%

03-71 Negative AUI Voltage Mid-Point

Default: -5.00

Settings -10.00–0.00 V

03-72 Negative AUI Voltage Proportional Mid-Point

Default: -50.00

Settings -100.00–100.00%

03-73 Negative AUI Voltage Lowest Point

Default: -10.00

Settings -10.00–0.00 V

03-74 Negative AUI Voltage Proportional Lowest Point

Default: -100.00

Settings -100.00–100.00%

- When you set the negative voltage AUI to the Frequency command, -100% corresponds to Fmax (Pr.01-00 Maximum Operation Frequency) and the motor runs in the reverse direction.
- The requirement for these three parameters (Pr.03-69, Pr.03-71 and Pr.03-73) is Pr.03-69 < Pr.03-71 < Pr.03-73. The values for three proportional points (Pr.03-70, Pr.03-72 and Pr.03-74) have not limits. There is a linear calculation between two points.
- The output percentage becomes 0% when the negative AUI input value is lower than the lowest point setting.

  For example:

  If Pr.03-69 = -1 V; Pr.03-70 = 10%, then the output becomes 0% when the AUI input is ≥ -1V. If the AUI input swings] between -1 V and -1.1 V, the drive's output frequency oscillates between 0% and 10%.

04 Multi-step Speed Parameters

✓ You can set this parameter during operation.

✓ 04-00	1st Step Speed Frequency
✓ 04-01	2nd Step Speed Frequency
✓ 04-02	3rd Step Speed Frequency
✓ 04-03	4th Step Speed Frequency
✓ 04-04	5th Step Speed Frequency
✓ 04-05	6th Step Speed Frequency
✓ 04-06	7th Step Speed Frequency
✓ 04-07	8th Step Speed Frequency
✓ 04-08	9th Step Speed Frequency
✓ 04-09	10th Step Speed Frequency
✓ 04-10	11th Step Speed Frequency
✓ 04-11	12th Step Speed Frequency
✓ 04-12	13th Step Speed Frequency
✓ 04-13	14th Step Speed Frequency
✓ 04-14	15th Step Speed Frequency

Default: 0.00

Settings 0.00–599.00 Hz

📖 Use the multi-function input terminals (refer to settings 1–4 of Pr.02-01–02-08 and Pr.02-26–02-31 Multi-function Input Command) to select the multi-step speed command (the maximum is 15th step speed). Pr.04-00 to Pr.04-14 set the multi-step speed (frequency) as shown in the following diagram.

📖 The external terminal / digital keypad / communication controls the RUN and STOP commands with Pr.00-21.

📖 You can set each multi-step speed between 0.00–599.00 Hz during operation.

📖 Explanation for the timing diagram of the multi-step speed and external terminals

The related parameter settings are:

1. Pr.04-00–Pr.04-14: sets the 1st–15th multi-step speed (to set the frequency of each step speed)
2. Pr.02-01–Pr.02-08 and Pr.02-26–Pr.02-31: sets the multi-function input terminals (multi-step speed command 1–4)

📖 Related parameters:

- Pr.01-22 JOG Frequency
- Pr.02-01 Multi-function Input Command 1 (MI1)
- Pr.02-02 Multi-function Input Command 2 (MI2)
- Pr.02-03 Multi-function Input Command 3 (MI3)
- Pr.02-04 Multi-function Input Command 4 (MI4)

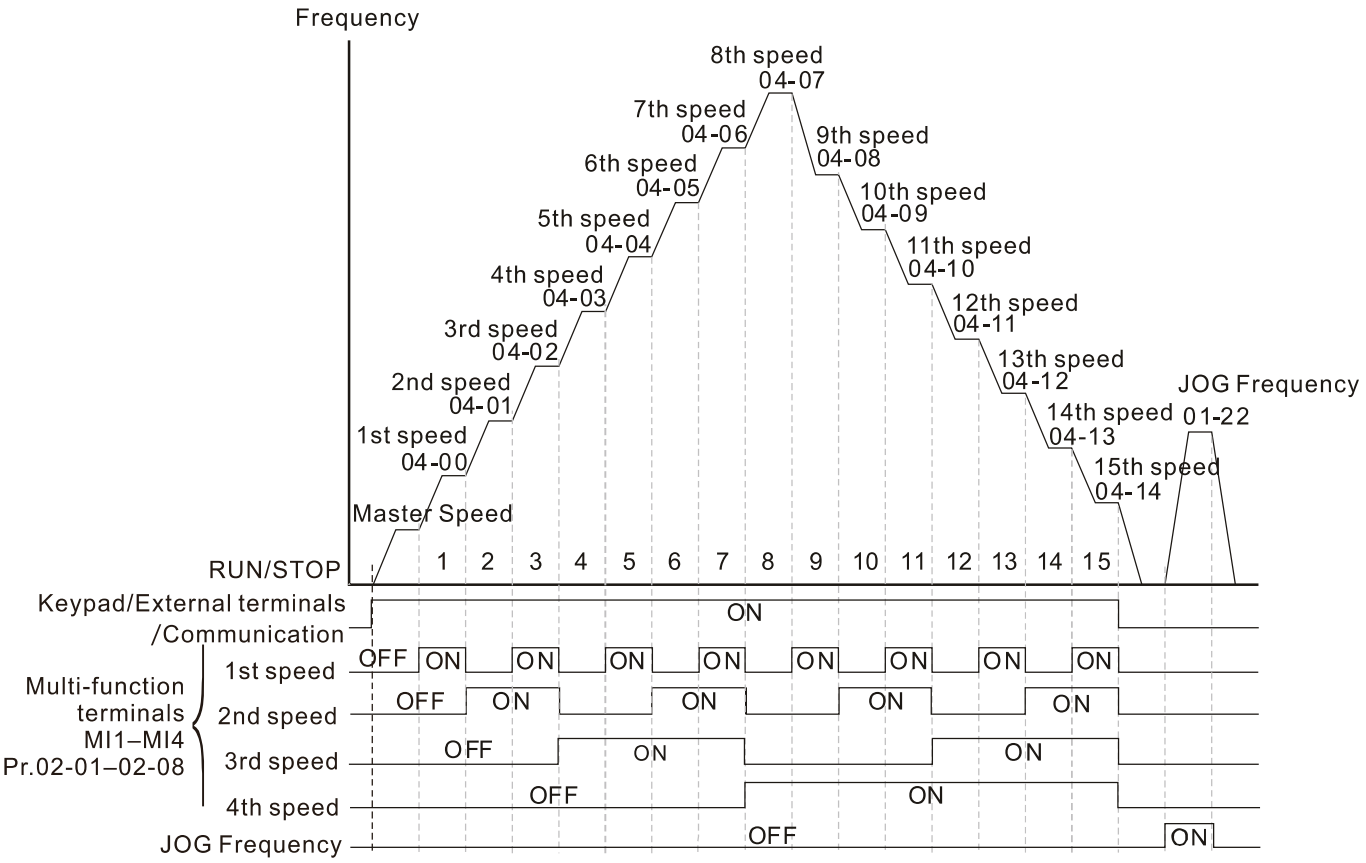

Multi-speed via External Terminals

04-15	Position Command 1 (Rotation)
04-17	Position Command 2 (Rotation)
04-19	Position Command 3 (Rotation)
04-21	Position Command 4 (Rotation)
04-23	Position Command 5 (Rotation)
04-25	Position Command 6 (Rotation)
04-27	Position Command 7 (Rotation)
04-29	Position Command 8 (Rotation)
04-31	Position Command 9 (Rotation)
04-33	Position Command 10 (Rotation)
04-35	Position Command 11 (Rotation)
04-37	Position Command 12 (Rotation)
04-39	Position Command 13 (Rotation)
04-41	Position Command 14 (Rotation)
04-43	Position Command 15 (Rotation)

Default: 0

Settings -30000–30000

04-16	Position Command 1 (Pulse)
04-18	Position Command 2 (Pulse)
04-20	Position Command 3 (Pulse)
04-22	Position Command 4 (Pulse)

04-24	Position Command 5 (Pulse)
04-26	Position Command 6 (Pulse)
04-28	Position Command 7 (Pulse)
04-30	Position Command 8 (Pulse)
04-32	Position Command 9 (Pulse)
04-34	Position Command 10 (Pulse)
04-36	Position Command 11 (Pulse)
04-38	Position Command 12 (Pulse)
04-40	Position Command 13 (Pulse)
04-42	Position Command 14 (Pulse)
04-44	Position Command 15 (Pulse)

Default: 0

Settings -32767–32767

Switch the target position through external terminal, that is, set the multi-function input commands MI1 to MI4 (Pr.02-01 = 1, Pr.02-02 = 2, Pr.02-03 = 3, and Pr.02-04 = 4), and determine the P2P target position using the multi-step speed.

Setting method: Target Position = Pr.04-15 × (Pr.10-01*4) + Pr.04-16

Multi-step Speed Status	P2P Target Position			P2P Maximum Speed	
0000	0			Pr.11-00 bit8=0	Pr.11-00 bit8=1
0001	Position 1	Pr.04-15	Pr.04-16	Pr.11-43	Pr.04-00
0010	Position 2	Pr.04-17	Pr.04-18		Pr.04-01
0011	Position 3	Pr.04-19	Pr.04-20		Pr.04-02
0100	Position 4	Pr.04-21	Pr.04-22		Pr.04-03
0101	Position 5	Pr.04-23	Pr.04-24		Pr.04-04
0110	Position 6	Pr.04-25	Pr.04-26		Pr.04-05
0111	Position 7	Pr.04-27	Pr.04-28		Pr.04-06
1000	Position 8	Pr.04-29	Pr.04-30	Pr.11-43	Pr.04-07
1001	Position 9	Pr.04-31	Pr.04-32		Pr.04-08
1010	Position 10	Pr.04-33	Pr.04-34		Pr.04-09
1011	Position 11	Pr.04-35	Pr.04-36		Pr.04-10
1100	Position 12	Pr.04-37	Pr.04-38		Pr.04-11
1101	Position 13	Pr.04-39	Pr.04-40		Pr.04-12
1110	Position 14	Pr.04-41	Pr.04-42		Pr.04-13
1111	Position 15	Pr.04-43	Pr.04-44		Pr.04-14

04-50	PLC Buffer 0
04-51	PLC Buffer 1
04-52	PLC Buffer 2
04-53	PLC Buffer 3
04-54	PLC Buffer 4
04-55	PLC Buffer 5
04-56	PLC Buffer 6
04-57	PLC Buffer 7
04-58	PLC Buffer 8
04-59	PLC Buffer 9

✓	04-60	PLC Buffer 10
✓	04-61	PLC Buffer 11
✓	04-62	PLC Buffer 12
✓	04-63	PLC Buffer 13
✓	04-64	PLC Buffer 14
✓	04-65	PLC Buffer 15
✓	04-66	PLC Buffer 16
✓	04-67	PLC Buffer 17
✓	04-68	PLC Buffer 18
✓	04-69	PLC Buffer 19

Default: 0

Settings 0–65535

You can combine the PLC buffer with the built-in PLC function for a variety of applications.

✓	04-70	PLC Application Parameter 0
✓	04-71	PLC Application Parameter 1
✓	04-72	PLC Application Parameter 2
✓	04-73	PLC Application Parameter 3
✓	04-74	PLC Application Parameter 4
✓	04-75	PLC Application Parameter 5
✓	04-76	PLC Application Parameter 6
✓	04-77	PLC Application Parameter 7
✓	04-78	PLC Application Parameter 8
✓	04-79	PLC Application Parameter 9
✓	04-80	PLC Application Parameter 10
✓	04-81	PLC Application Parameter 11
✓	04-82	PLC Application Parameter 12
✓	04-83	PLC Application Parameter 13
✓	04-84	PLC Application Parameter 14
✓	04-85	PLC Application Parameter 15
✓	04-86	PLC Application Parameter 16
✓	04-87	PLC Application Parameter 17
✓	04-88	PLC Application Parameter 18
✓	04-89	PLC Application Parameter 19
✓	04-90	PLC Application Parameter 20
✓	04-91	PLC Application Parameter 21
✓	04-92	PLC Application Parameter 22
✓	04-93	PLC Application Parameter 23

04-94	PLC Application Parameter 24
04-95	PLC Application Parameter 25
04-96	PLC Application Parameter 26
04-97	PLC Application Parameter 27
04-98	PLC Application Parameter 28
04-99	PLC Application Parameter 29

Default: 0

Settings 0–65535

Pr.04-70–Pr.04-99 are user-defined parameters. You can combine these 30 PLC Application Parameters with the PLC programming for a variety of applications.

05 Motor Parameters

✎ You can set this parameter during operation.

The following are abbreviations for different types of motors:

- IM: Induction motor
- PM: Permanent magnet synchronous AC motor
- IPM: Interior permanent magnet synchronous AC motor
- SPM: Surface permanent magnet synchronous AC motor
- SynRM: Synchronous reluctance motor

05-00 Motor Parameter Auto-Tuning

Default: 0

Settings
0: No function
1: Simple rolling auto-tuning for induction motor (IM)
2: Static auto-tuning for induction motor
4: Dynamic test for PM magnetic pole (with the running in forward direction)
5: Rolling auto-tuning for PM (IPM / SPM)
6: Advanced rolling auto-tuning for IM flux curve
11: SynRM parameter auto-tuning
12: FOC Sensorless inertia estimation
13: Static auto-tuning for PM

📖 Refer to Section 12-2 “Adjustment and Application” for more details of motor adjustment process.

05-01 Full-load Current for Induction Motor 1 (A)

Default: Depending on the model power

Settings Depending on the model power

📖 Sets this value according to the rated current of the motor as indicated on the motor nameplate.

📖 The default is 90% of the drive’s rated current.

Example: The rated current for a 7.5 HP (5.5 kW) is 25 A. The default is 22.5 A.

The setting range is between 40%–120% of the rated current.

(25 × 40% = 10 A and 25 × 120% = 30 A)

✎ 05-02 Rated Power for Induction Motor 1 (kW)

Default: Depending on the model power

Settings 0.00–655.35 kW

📖 Sets the rated power for motor 1. The default is the drive’s power value.

✎ 05-03 Rated Speed for Induction Motor 1 (rpm)

Default: Depending on the motor’s number of poles

Settings 0–xxxx rpm (Depending on the motor’s number of poles)

- Sets the rated speed for the motor as indicated on the motor nameplate.
- Pr.01-01 and Pr.05-04 determine the maximum rotor speed for IM.
  For example: Pr.01-01=20 Hz, Pr.05-04=2, according to the equation 120 x 20 Hz / 2 = 1200 rpm and take integers. Due to the slip of the IM, the maximum setting value for Pr.05-03 is 1199 rpm (1200 rpm – 1).

05-04 Number of Poles for Induction Motor 1

Default: 4

Settings 2–64

- Sets the number poles for the motor (must be an even number).
- Set up Pr.01-01 and Pr.05-03 before setting up Pr.05-04 to make sure the motor operates normally. Pr.01-01 and Pr.05-03 determine the maximum set up number poles for the IM.
  For example: Pr.01-01 = 20 Hz and Pr.05-03 = 39 rpm, according to the equation 120 x 20 Hz / 39 rpm = 61.5 and take even number, the number of poles is 60. Therefore, Pr.05-04 can be set to the maximum of 60 poles.

05-05 No-load Current for Induction Motor 1 (A)

Default: Depending on the model power

Settings 0.00–Pr.05-01 default

- For model with 110 kW and above, default setting is 20% of motor rated current.

05-06 Stator Resistance (Rs) for Induction Motor 1

Default: Depending on the model power

Settings 0.000–65.535 Ω

05-07 Rotor Resistance (Rr) for Induction Motor 1

Default: 0.000

Settings 0.000–65.535 Ω

05-08 Magnetizing Inductance (Lm) for Induction Motor 1

05-09 Stator Inductance (Lx) for Induction Motor 1

Default: 0.0

Settings 0.0–6553.5 mH

05-13 Full-load Current for Induction Motor 2 (A)

Default: Depending on the model power

Settings Depending on the model power

- Set this value according to the rated current of the motor as indicated on the motor nameplate. The default 90% of the drive's rated current.
  Example: The rated current for a 7.5 HP (5.5 kW) motor is 25 A. The default is 22.5 A.
  The setting range is between 40 %–120 % of rated current.
  25 × 40 % = 10 A and 25 × 120 % = 30 A

05-14 Rated Power for Induction Motor 2 (kW)

Default: Depending on the model power

Settings 0.00–655.35 kW

Set the rated power for motor 2. The default is the drive's power value.

05-15 Rated Speed for Induction Motor 2 (rpm)

Default: Depending on the motor's number of poles

Settings 0–xxxx rpm (Depending on the motor's number of poles)

Sets the rated speed for the motor as indicated on the motor nameplate.

Pr.01-01 and Pr.05-04 determine the maximum rotor speed of IM.

For example: Pr.01-01 = 20 Hz, Pr.05-04 = 2, according to the equation 120 x 20 Hz / 2 = 1200 rpm and take integers. Due to the slip of the IM, the maximum setting value for Pr.05-15 is 1199 rpm (1200 rpm – 1).

05-16 Number of poles for Induction Motor 2

Default: 4

Settings 2–64

Sets the number of poles for the motor (must be an even number).

Set up Pr.01-35 and Pr.05-15 before setting up Pr.05-16 to make sure the motor operates normally. Pr.01-35 and Pr.05-15 determine the maximum set up number of poles.

For example: Pr.01-35 = 20 Hz and Pr.05-15 = 39 rpm, according to the equation 120 x 20 Hz / 39 rpm = 61.5 and take even number, the number of poles is 60. Therefore, Pr.05-16 can be set to the maximum of 60 poles.

05-17 No-load Current for Induction Motor 2 (A)

Default: Depending on the model power

Settings 0.00–Pr.05-13 default

For model with 110 kW and above, default setting is 20% of motor rated current.

05-18 Stator Resistance (Rs) for Induction Motor 2

Default: Depending on the model power

Settings 0.000–65.535 Ω

05-19 Rotor Resistance (Rr) for Induction Motor 2

Default: 0.000

Settings 0.000–65.535 Ω

05-20 Magnetizing Inductance (Lm) for Induction Motor 2

05-21 Stator Inductance (Lx) for Induction Motor 2

Default: 0.0

Settings 0.0–6553.5 mH

05-22 Induction Motor 1/ 2 Selection

Default: 1

Settings 1: Motor 1
2: Motor 2

Sets the motor currently operated by the AC motor drive.

05-23 Frequency for Y-connection / Δ-connection Switch for an Induction Motor

Default: 60.00

Settings 0.00–599.00 Hz

05-24 Y-connection / Δ-connection Switch for Induction Motor

Default: 0

Settings 0: Disable
1: Enable

05-25 Delay Time for Y-connection / Δ-connection Switch for an Induction Motor

Default: 0.200

Settings 0.000–60.000 sec.

You can apply Pr.05-23–Pr.05-25 in a wide range of motors, and the motor coil executes the Y-connection / Δ-connection switch as required. The wide range motors are related to the motor design. In general, the motor has higher torque with low speed Y-connection, and has higher speed with high speed Δ-connection).

Pr.05-24 enables and disables the switch of Y-connection / Δ-connection.

When you set Pr.05-24 as 1, the drive uses the Pr.05-23 setting and current motor frequency, and switches the current motor to Y-connection or Δ-connection. You can switch the relevant motor parameter settings simultaneously.

Pr.05-25 sets the switch delay time of Y-connection / Δ-connection.

When the output frequency reaches Y-connection / Δ-connection switch frequency, the drive delays according to Pr.05-25 before activating the multi-function output terminals.

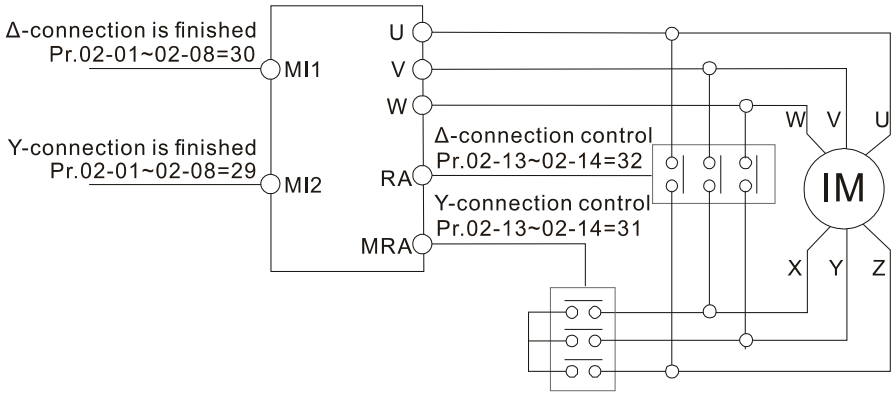

Y-Δ connection switch: can be used for wide range motor
Y-connection for low speed: higher torque can be used for rigid tapping
Δ-connection for high speed: higher torque can be used for high-speed drilling

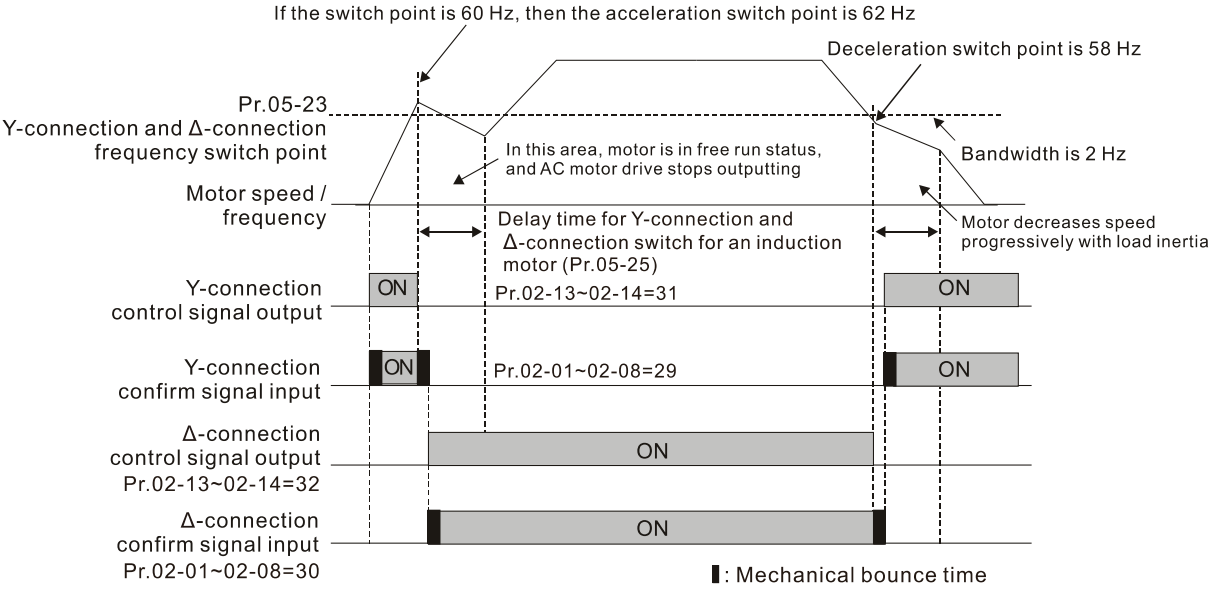

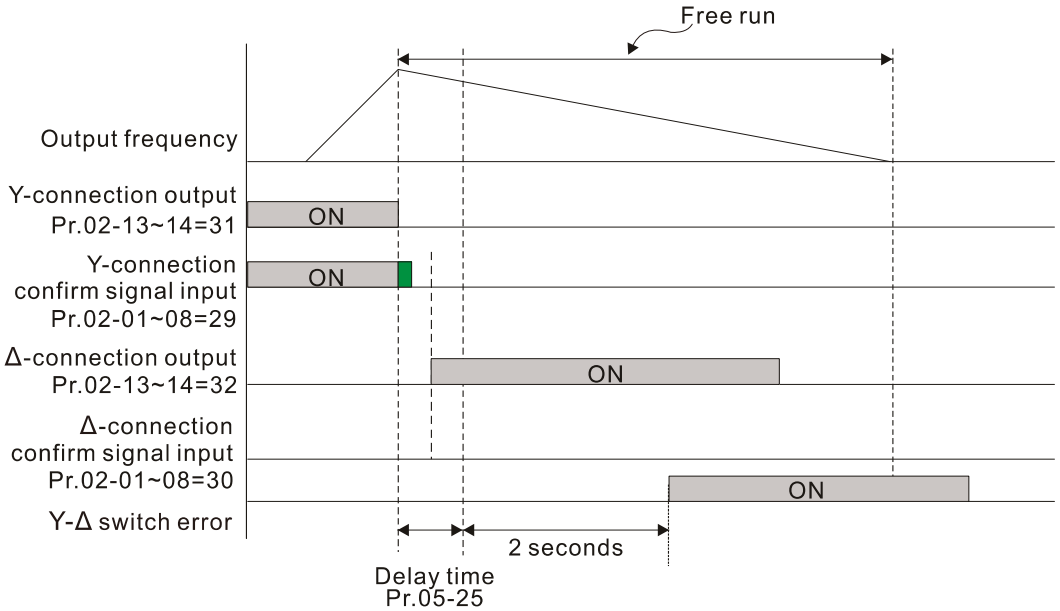

05-28 Accumulated Watt-hour for a Motor (W-hour)

Default: Read only

Settings 0.0–6553.5

05-29 Accumulated Watt-hour for a Motor in Low Word (kW-hour)

Default: Read only

Settings 0.0–6553.5

05-30 Accumulated Watt-hour for a Motor in High Word (MW-hour)

Default: Read only

Settings 0–65535

Pr.05-28–05-30 records the amount of power consumed by the motors. The accumulation begins when the drive is activated and the record is saved when the drive stops or turns OFF. The amount of consumed watts continues to accumulate when the drive is activated again. To clear the accumulation, set Pr.00-02 as 5 to return the accumulation record to 0.

The accumulated total watts of the motor per hour = Pr.05-30 × 1000000 + Pr.05-29 × 1000 + Pr.05-28 Wh

Example: When Pr.05-30 = 76 MWh and Pr.05-29 = 150 kWh, Pr.05-28 = 400 Wh (or 0.4 kWh), the accumulated total kilowatts of the motor per hour = 76 × 1000000 + 150 × 1000 + 40 = 76150400 Wh = 76150.4 kWh

05-31 Accumulated Motor Operation Time (Minutes)

Default: 0

Settings 0–1439

05-32 Accumulated Motor Operation Time (Days)

Default: 0

Settings 0–65535

Use Pr.05-31 and Pr.05-32 to record the motor operation time. To clear the operation time, set Pr.05-31 and Pr.05-32 as 00. An operation time shorter than 60 seconds is not recorded.

05-33 Induction Motor (IM) or Permanent Magnet Synchronous AC Motor (PM) Selection

Default: 0

Settings 0: IM
1: SPM
2: IPM
3: SynRM

05-34 Full-load current for a Permanent Magnet Synchronous AC Motor / Reluctance Motor

Default: Depending on the model power

Settings Depending on the model power

Sets the full-load current for the motor according to motor's nameplate. The default is 90% of the drive's rated current.

For example: The rated current of a 7.5 HP (5.5 kW) is 25 A. The default is 22.5A.
The setting range is between 40%–120% of rated current.
25 × 40% = 10 A and 25 × 120% = 30 A

05-35 Rated Power for a Permanent Magnet Synchronous AC Motor / Reluctance Motor

Default: Depending on the model power

Settings 0.00–655.35 kW

Sets the rated power for the permanent magnet synchronous motor. The default is the drive's power value.

05-36 Rated speed for a Permanent Magnet Synchronous AC Motor / Reluctance Motor

Default: 2000

Settings 0–65535 rpm

05-37 Pole number for a Permanent Magnet Synchronous AC Motor / Reluctance Motor

Default: 10

Settings 0–65535

05-38 System Inertia for a Permanent Magnet Synchronous AC Motor / Reluctance Motor

Default: Depending on the motor power

Settings 0.0–6553.5 kg-cm^2

📖 Default values are as below:

HP	kW	Default	HP	kW	Default	HP	kW	Default
1	0.7	3.0	30	22	308.0	215	160	4151.3
2	1.5	6.6	40	30	527.0	250	186	5012.1
3	2.2	15.8	50	37	866.0	300	224	6314.9
5	3.7	25.7	60	45	1082.0	375	280	6314.9
7	5.5	49.6	75	56	1267.6	425	317	6314.9
10	7.5	82.0	100	75	1515.0	475	354	6314.9
15	11	177.0	120	89	2025.8	600	447	6314.9
20	15	211.0	150	112	2447.8	650	485	6314.9
25	18	265.0	175	130	2871.4	750	559	6314.9

05-39 Stator Resistance for a Permanent Magnet Synchronous AC Motor / Reluctance Motor

Default: 0.000

Settings 0.000–65.535 Ω

05-40 Permanent Magnet Synchronous AC Motor Ld / Reluctance Motor

Default: 0.00

Settings 0.00–655.35 mH

05-41 Permanent Magnet Synchronous AC Motor Lq / Reluctance Motor

Default: 0.00

Settings 0.00–655.35 mH

05-42 PG Offset Angle for a Permanent Magnet Synchronous AC Motor / Reluctance Motor

Default: 0

Settings 0.0–360.0°

📖 When you set Pr.05-00 as 4, the drive detects the offset angle and writes it into Pr.05-42.

05-43 Ke Parameter of a Permanent Magnet Synchronous AC Motor / Reluctance Motor

Default: 0

Settings 0–65535 V / krpm

📖 Permanent magnet motor parameter Ke ($V_{phase, rms}$ / krpm)

📖 When Pr.05-00 = 5, parameter Ke is calculated according to the motor's actual operation.

📖 When Pr.05-00 = 13, parameter Ke is automatically calculated according to the motor power, current and rotor speed.

06 Protection Parameters

✓ You can set this parameter during operation.

✓ 06-00 Low Voltage Level

		Default:
Settings	230V models:	
	Frame A–D (including D0): 150.0–220.0 V_{DC}	180.0
	Frame E and above: 190.0–220.0 V_{DC}	200.0
	460V models:	
	Frame A–D (including D0): 300.0–440.0 V_{DC}	360.0
	Frame E and above: 380.0–440.0 V_{DC}	400.0
	575V models: 420.0–520.0 V_{DC}	470.0
	690V models: 450.0–660.0 V_{DC}	480.0

📖 Sets the Low Voltage (Lv) level. When the DC bus voltage is lower than Pr.06-00, a Lv fault is triggered, and the drive stops output and the motor coasts to a stop.

📖 If the Lv fault is triggered during operation, the drive stops output and the motor coasts to a stop. There are three Lv faults: LvA (Lv during acceleration), Lvd (Lv during deceleration), and Lvn (Lv in constant speed) that are triggered according to the status of acceleration or deceleration. You must press RESET to clear the Lv fault. The drive automatically restarts if you set to restart after momentary power loss (refer to Pr.07-06 Restart after Momentary Power Loss and Pr.07-07 Allowed Power Loss Duration for details).

📖 If the Lv fault is triggered when the drive is in STOP status, the drive displays LvS (Lv during stop), which is not recorded, and the drive restarts automatically when the input voltage is higher than Pr.06-00 + Lv return level (as listed below).

Lv Return Level	230V	460V	575V	690V
Frame A–D	30V_{DC}	60V_{DC}	100V_{DC}	100V_{DC}
Frame E–H	40V_{DC}	80V_{DC}		120V_{DC}

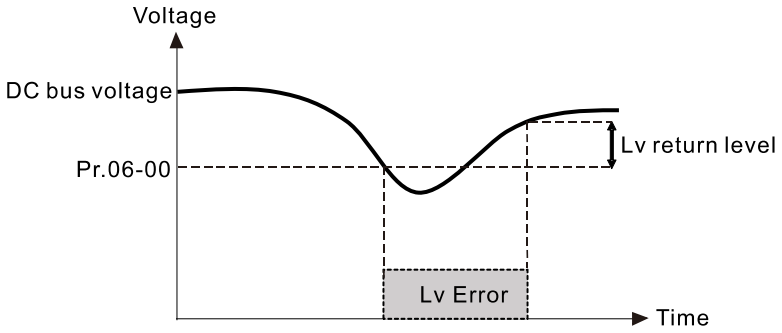

✓ 06-01 Over-voltage Stall Prevention

		Default:
		380.0 / 760.0 / 920.0 / 1087.0
Settings	230V models: 0.0–450.0 V_{DC}	
	460V models: 0.0–900.0 V_{DC}	
	575V models: 0.0–920.0 V_{DC}	
	690V models: 0.0–1087.0 V_{DC}	
	0: Disabled	

- Setting Pr.06-01 to 0.0 disables the over-voltage stall prevention function (connected with braking unit or brake resistor). Use this setting when braking units or brake resistors are connected to the drive.
- Setting Pr.06-01 to a value > 0.0 enables the over-voltage stall prevention. This setting refers to the power supply system and loading. If the setting is too low, then over-voltage stall prevention is easily activated, which may increase the deceleration time.
- Related parameters:
  - Pr.01-13, Pr.01-15, Pr.01-17, Pr.01-19 Deceleration Time 1–4
  - Pr.02-13–Pr.02-14 Multiple-function Output (Relay 1 and Relay 2)
  - Pr.02-16–Pr.02-17 Multiple-function output (MO1 and MO2)
  - Pr.06-02 Selection for Over-voltage Stall Prevention.

06-02 Selection for Over-voltage Stall Prevention

Default: 0

Settings 0: Traditional over-voltage stall prevention
1: Smart over-voltage stall prevention

- Use this function when you are unsure about the load inertia. When stopping under normal load, the over-voltage does not occur during deceleration and meet the deceleration time setting. Sometimes it may not stop due to over-voltage during decelerating to STOP when the load regenerative inertia increases. In this case, the AC motor drive extends the deceleration time automatically until the drive stops.
- When you set Pr.06-02 to 0, during deceleration the motor exceeds the synchronous speed due to load inertia. In this case, the motor becomes an electrical generator. The DC bus voltage may exceed its maximum allowable value due to motor regeneration in some situations, such as motor's loading inertia being too high or drive's deceleration time being set too short. When you enable traditional over-voltage stall prevention and the DC bus voltage detected is too high, the drive stops decelerating (output frequency remains unchanged) until the DC bus voltage drops below the setting value.

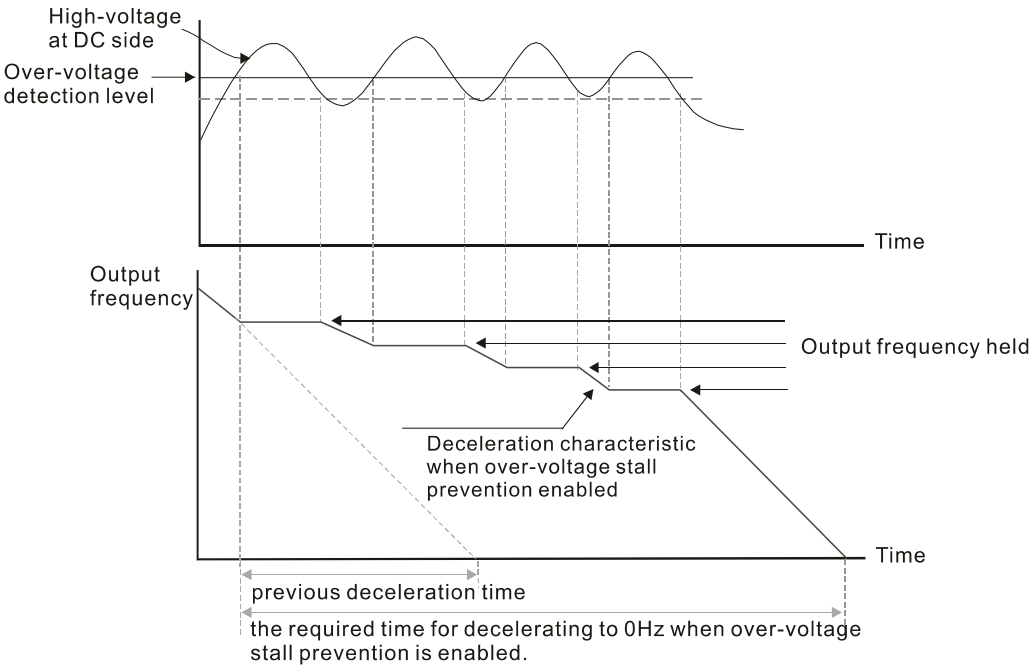

When you set Pr.06-02 to 1, to use smart over-voltage stall prevention during deceleration, the drive maintains the DC bus voltage when decelerating and prevents the drive from ov.

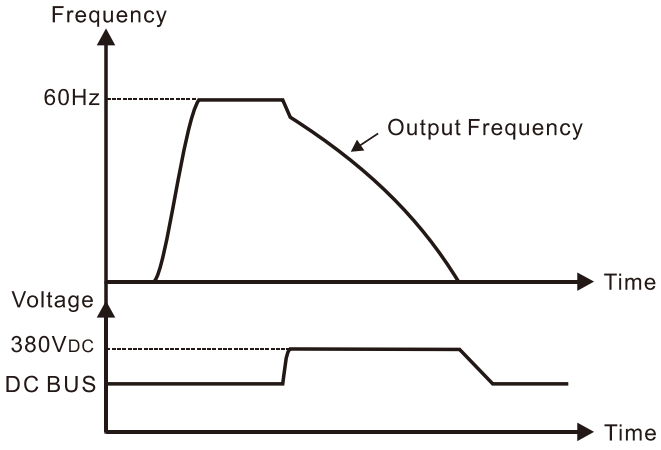

230V Series

When you enable the over-voltage stall prevention, the drive's deceleration time is longer than the setting.

If you encounter any problem with the deceleration time, refer to the following guides for troubleshooting.

1. Increase the deceleration time to a proper value.
2. Install a brake resistor (refer to Section 7-1 Brake Resistors and Brake Units Used in AC motor Drives for details) to dissipate the electrical energy that is regenerated from the motor.

Related parameters:

- Pr.01-13, Pr.01-15, Pr.01-17, Pr.01-19 Deceleration Time 1–4
- Pr.02-13–Pr.02-14 Multiple-function Output (Relay 1 and Relay 2)
- Pr.02-16–Pr.02-17 Multiple-function Output (MO1 and MO2)
- Pr.06-01 Over-voltage Stall Prevention.

06-03 Over-current Stall Prevention during Acceleration

Settings	230V / 460V models	
	Heavy duty: 0–195% (100%: drive's rated current)	Default: 150
	Super heavy duty: 0–210% (100%: drive's rated current)	Default: 150
	575V / 690V models	
	Light duty: 0–125% (100%: drive's rated current)	Default: 120
	Normal duty: 0–150% (100%: drive's rated current)	Default: 120
	Heavy duty: 0–180% (100%: drive's rated current)	Default: 150

100% corresponds to the rated current of the drive (Pr.00-01).

This parameter only works in VF, VFPG, and SVC control mode.

The default for Pr.06-03 and Pr.06-04 is 150%, and the maximum value is 200%. If the DC voltage is higher than the 700 V_{DC} (460V models) or 350 V_{DC} (230V models), the maximum value for Pr.06-03 and Pr.06-04 is 180%.

If the motor load is too large or the drive's acceleration time is too short, the output current of the drive may be too high during acceleration, and it may cause motor damage or trigger the drive's

protection functions (oL or oc). Use this parameter to prevent these situations.

📖 During acceleration, the output current of the drive may increase abruptly and exceed the setting value of Pr.06-03. In this case, the drive stops accelerating and keeps the output frequency constant, and then continues to accelerate until the output current decreases.

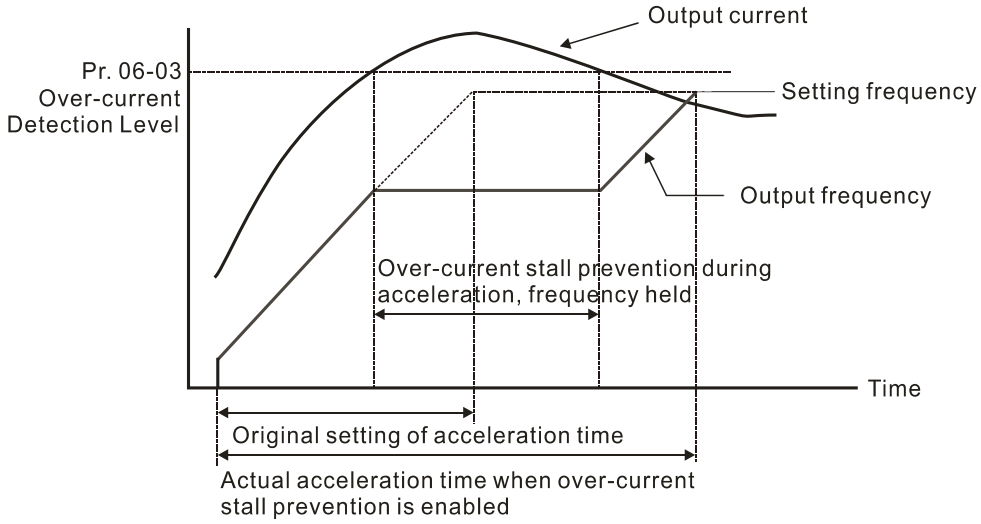

📖 Refer to Pr.06-16 for more details of stall level in flux weakening region. The protection curve is as follows:

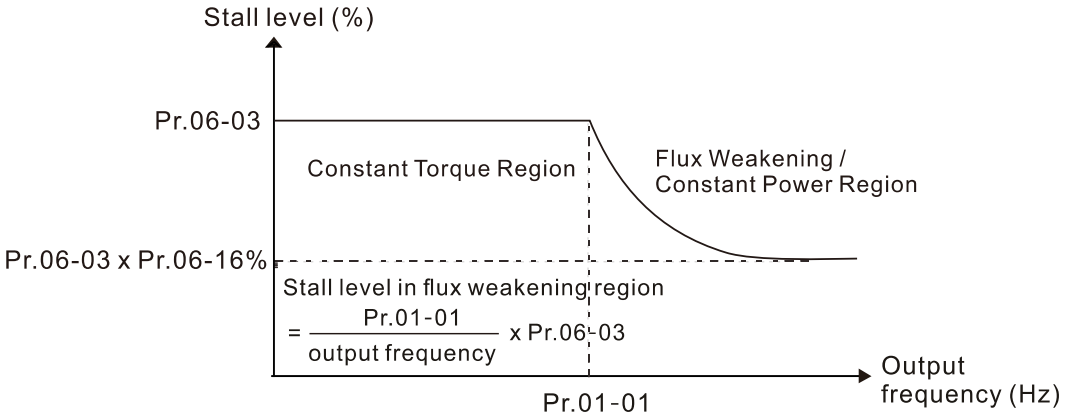

📖 When you enable the over-current stall prevention, the drive's acceleration time is longer than the setting.

📖 When the over-current stall prevention occurs because the motor capacity is too small or operates in the default, decrease the Pr.06-03 setting value.

📖 If you encounter any problem with the acceleration time, refer to the following guides for troubleshooting.

1. Increase the acceleration time to a proper value.
2. Set Pr.01-44 Auto Acceleration and Auto-Deceleration Setting to 1, 3 or 4 (auto-acceleration).
3. Related parameters:
   - Pr.01-12, Pr.01-14, Pr.01-16, Pr.01-18 Acceleration Time 1–4
   - Pr.01-44 Auto Acceleration and Auto-Deceleration Setting
   - Pr.02-13–02-14 Multi-function Output 1 (Relay 1 and Relay 2)
   - Pr.02-16–02-17 Multi-function Output (MO1 and MO2)

06-04 Over-current Stall Prevention during Operation

Settings	230V / 460V models	
	Heavy duty: 0–195% (100%: drive's rated current)	Default: 150
	Super heavy duty: 0–210% (100%: drive's rated current)	Default: 150
	575V / 690V models	
	Light duty: 0–125% (100%: drive's rated current)	Default: 120
	Normal duty: 0–150% (100%: drive's rated current)	Default: 120
	Heavy duty: 0–180% (100%: drive's rated current)	Default: 150

- 100% corresponds to the rated current of the drive (Pr.00-01).
- This parameter only works in VF, VFPG, and SVC control modes.
- This is a protection for the drive to decrease output frequency automatically when the motor over-loads abruptly during constant motor operation.
- If the output current exceeds the setting value for Pr.06-04 when the drive is operating, the drive decelerates according to the Pr.06-05 setting to prevent the motor from stalling. The lower limit for the over-current stall prevention is determined by the maximum value among 0.5 Hz, Pr.01-07 and Pr.01-11.
- If the output current is lower than the setting value for Pr.06-04, the drive accelerates (according to Pr.06-05) again to the setting frequency.

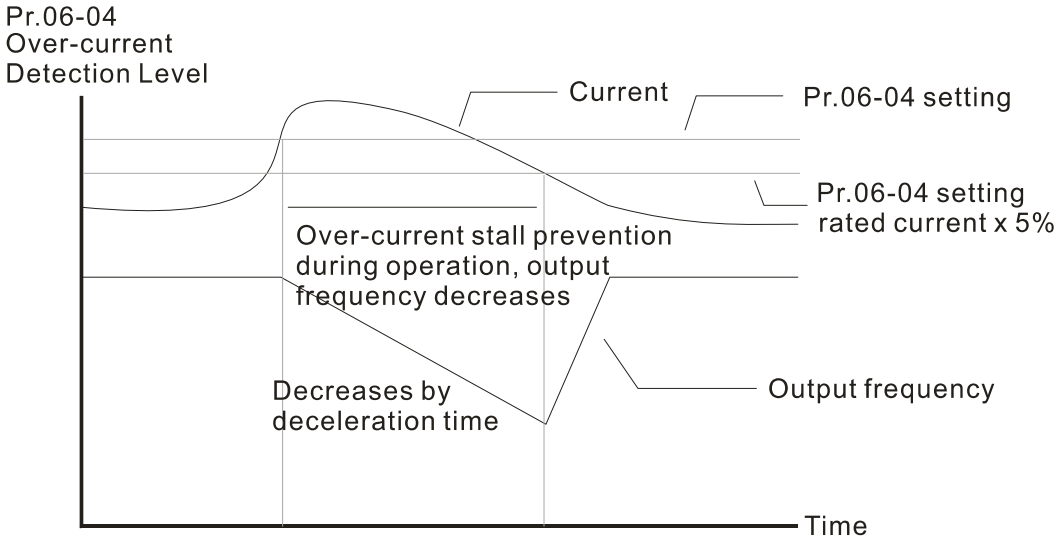

Over-current stall prevention during operation

06-05 Acceleration / Deceleration Time Selection for Stall Prevention at Constant Speed

Default: 0

Settings	0: By current acceleration / deceleration time
	1: By the first acceleration / deceleration time
	2: By the second acceleration / deceleration time
	3: By the third acceleration / deceleration time
	4: By the fourth acceleration / deceleration time
	5: By auto-acceleration / auto-deceleration

- Sets the acceleration / deceleration time selection when stall prevention occurs at constant speed.

06-06 Over-torque Detection Selection (OT1)

Default: 0

Settings 0: No function
1: Continue operation after over-torque detection during constant speed operation
2: Stop after over-torque detection during constant speed operation
3: Continue operation after over-torque detection during RUN
4: Stop after over-torque detection during RUN

06-09 Over-torque Detection Selection (OT2)

Default: 0

Settings 0: No function
1: Continue operation after over-torque detection during constant speed operation
2: Stop after over-torque detection during constant speed operation
3: Continue operation after over-torque detection during RUN
4: Stop after over-torque detection during RUN

- When you set Pr.06-06 and Pr.06-09 to 1 or 3, a warning message displays, but there is no error record.
- When you set Pr.06-06 and Pr.06-09 to 2 or 4, an error message displays and there is an error record.

06-07 Over-torque Detection Level (OT1)

Default: 120

Settings 10–250% (100% corresponds to the rated current of the drive)

06-08 Over-torque Detection Level (OT1)

Default: 0.1

Settings 0.0–60.0 sec.

06-10 Over-torque Detection Level (OT2)

Default: 120

Settings 10–250% (100% corresponds to the rated current of the drive)

06-11 Over-torque Detection Time (OT2)

Default: 0.1

Settings 0.0–60.0 sec.

- When the output current exceeds the over-torque detection level (Pr.06-07 or Pr.06-10) and exceeds the over-torque detection time (Pr.06-08 or Pr.06-11), the over-torque detection follows the setting of Pr.06-06 and Pr.06-09.
- When you set Pr.06-06 or Pr.06-09 to 1 or 3, an ot1 / ot2 warning displays while the drive keeps running after over-torque detection. The warning remains on until the output current is smaller than 5% of the over-torque detection level.

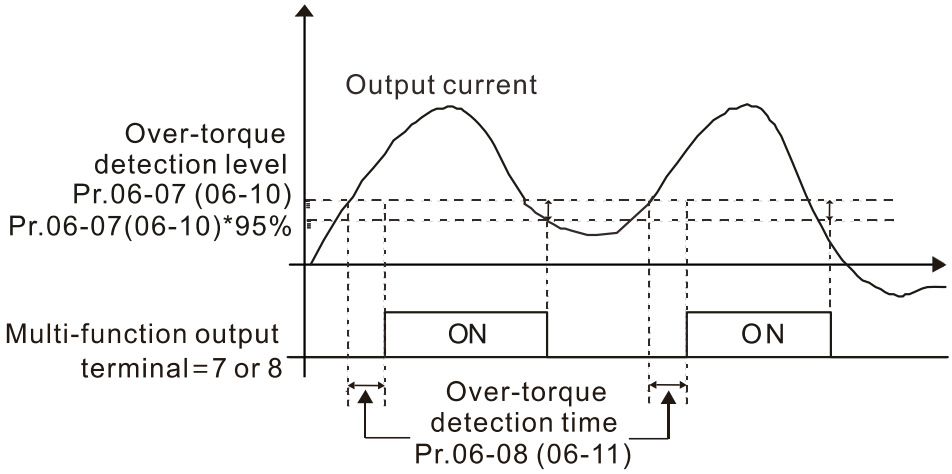

When you set Pr.06-06 or Pr.06-09 to 2 or 4, an ot1 / ot2 warning displays and the drive stops running after over-torque detection. The drive does not run until you manually reset it.

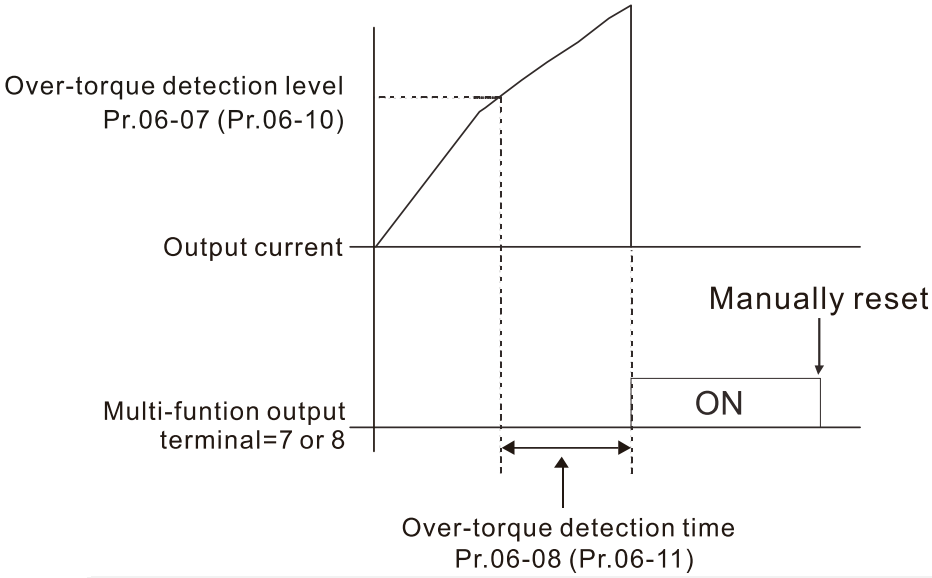

06-12 Current Limit

Settings	230V / 460V models	
	0–195% (100% corresponds to the rated current of the drive)	Default: 190
	575V / 690V models	
	0–250% (100% corresponds to the rated current of the drive)	Default: 170

230V / 460V models: 100% corresponds to the rated current of the drive, refer to Pr.00-01 for details.

575V / 690V models: 100% corresponds to the rated current of the drive (Pr.00-01).

Sets the maximum output current of the drive. Use Pr.11-17–Pr.11-20 to set the drive's output current limit. When setting the control mode as VF, SVC or VFPG, if the output frequency of the drive reaches this current limit, the output frequency decreases automatically. It works like the current stall prevention.

06-13 Electronic Thermal Relay Selection (Motor 1)
06-27 Electronic Thermal Relay Selection (Motor 2)

Default: 2

Settings 0: Inverter motor (with external forced cooling)
1: Standard motor (motor with fan on the shaft)
2: Disable

- Prevents self-cooled motor from overheating under low speed. Use an electronic thermal relay to limit the drive's output power.
- Setting the parameter to 0 is suitable for an inverter motor (motor fan using an independent power supply). For this kind of motor, there is no significant correlation between cooling capacity and motor speed. Therefore, the action of electronic thermal relays remains stable in low speed to ensure the load capability of the motor in low speed.
- Setting the parameter to 1 is suitable for standard motor (motor fan is fixed on the rotor shaft). For this kind of motor, the cooling capacity is lower in low speed; therefore, the action of an electronic thermal relay reduces the action time to ensure the life of motor.
- When the power is cycled frequently, if the power is switched OFF, the electronic thermal relay protection is reset; therefore even setting the parameter to 0 or 1 may not protect the motor well. If there are several motors connected to one drive, install an electronic thermal relay in each motor.

06-14 Electronic Thermal Relay Action Time 1 (Motor 1)
06-28 Electronic Thermal Relay Action Time 2 (Motor 2)

Default: 60.0

Settings 30.0–600.0 sec.

- Set the parameter to 150% of motor rated current and use with the setting of Pr.06-14 and Pr.06-28 to prevent motor damage due to overheating. When it reaches the setting, the drive displays "EoL1 / EoL2", and the motor coasts to stop.
- Use this parameter to set the action time of the electronic thermal relay. It works based on the I^2t characteristic curve of electronic thermal relay, the output frequency and current of the drive, and the operation time to prevent the motor from overheating.

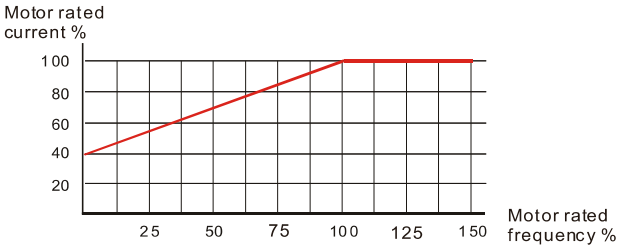

Motor cooling curve with shaft-fixed fan

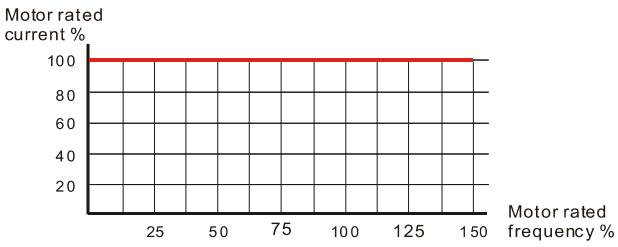

Motor cooling curve with independent fan

- The action of electronic thermal relay depends on the setting for Pr.06-13 and Pr.06-27.
  1. Pr.06-13 or Pr.06-27 is set to 0 (using inverter motor):
     When the output current of motor drive is higher than 150% of the motor rated current (refer to the motor rated current % corresponded to the motor rated frequency in the motor cooling curve with independent fan), motor drive starts to count the time. The electronic thermal relay acts when the accumulated time exceeds Pr.06-14 or Pr.06-28.

2. Pr.06-13 or Pr.06-27 is set to 1 (using standard motor):
   When the output current of the drive is higher than 150% of the motor rated current (refer to the motor rated current % corresponded to the motor rated frequency in the motor cooling curve with shaft-fixed fan), the drive starts to count the time. The electronic thermal relay acts when the accumulated time exceeds Pr.06-14 or Pr.06-28.
3. If the motor's rated current (Pr.05-01) is not set, then set 90% of the drive's rated current (Pr.00-01) as the default value of this parameter.

📖 The actual electronic thermal relay action time adjusts according to the drive output current (shown as the motor loading rate %). The action time is short when the current is high, and the action time is long when the current is low. Refer to the following diagram: (The motor cooling curve with shaft-fixed fan and motor cooling curve with independent fan F = 50 Hz are the same one.)

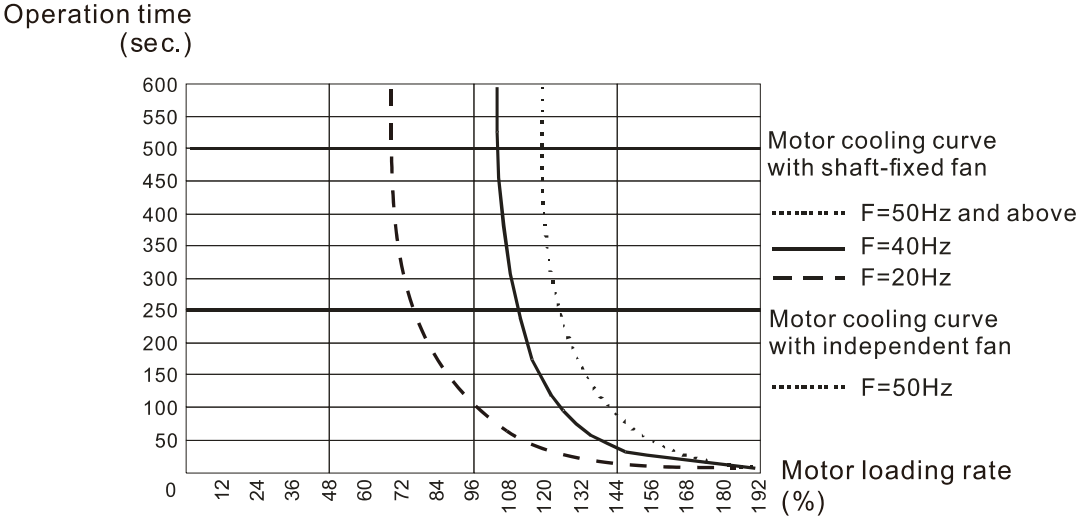

06-15 Temperature Level Overheat (oH) Warning

Default: 105.0

Settings 0.0–110.0ºC

📖 If Pr.06-15 is set to 110ºC, when the temperature reaches 110ºC, the drive stops with an IGBT over-heat fault.

📖 For Frame C and above, when IGBT temperature is above Pr.06-15 minus 15ºC, the cooling fan enhances performance to 100%; however, when IGBT temperature is below 35ºC of Pr.06-15 and the temperature of CAP is below 10ºC of capacitor oH warning level (Pr.06-51), the cooling fan resets. The temperature 35ºC is the criterion if Pr.06-15 is set below 35ºC.

06-16 Stall Prevention Limit Level (Weak Magnetic Field Current Stall Prevention Level)

Default of 230V / 460V models: 100

Default of 575V / 690V models: 50

Settings 0–100% (Refer to Pr.06-03)

📖 Sets the over-current stall prevention level when the motor's operation frequency is larger than Pr.01-01 (base frequency). This parameter only works during acceleration.

📖 Example: Pr.06-03 = 150%, Pr.06-04 = 100% and Pr.06-16 = 80%, when the operation frequency is larger than Pr.01-01, the lowest over-current stall prevention level during acceleration is: Pr.06-03 × Pr.06-16 = 150 × 80% = 120%. (Refer to Pr.06-03 diagram for the protection curve.)

📖 Pr.06-16 is invalid when the over-current stall prevention activates according to Pr.06-04 at constant speed.

06-17	Fault Record 1
06-18	Fault Record 2
06-19	Fault Record 3
06-20	Fault Record 4
06-21	Fault Record 5
06-22	Fault Record 6

Settings

0: No fault record

1: Over-current during acceleration (ocA)

2: Over-current during deceleration (ocd)

3: Over-current during steady operation (ocn)

4: Ground fault (GFF)

5: IGBT short circuit between upper bridge and lower bridge (occ)

6: Over-current at stop (ocS)

7: Over-voltage during acceleration (ovA)

8: Over-voltage during deceleration (ovd)

9: Over-voltage at constant speed (ovn)

10: Over-voltage at stop (ovS)

11: Low-voltage during acceleration (LvA)

12: Low-voltage during deceleration (Lvd)

13: Low-voltage at constant speed (Lvn)

14: Low-voltage at stop (LvS)

15: Phase loss protection (OrP)

16: IGBT overheating (oH1)

17: Heatsink overheating (oH2)

18: IGBT temperature detection failure (tH1o)

19: Capacitor hardware error (tH2o)

21: Over load (oL)

22: Electronic thermal relay 1 protection (EoL1)

23: Electronic thermal relay 2 protection (EoL2)

24: Motor overheating (oH3) (PTC / PT100)

26: Over torque 1 (ot1)

27: Over torque 2 (ot2)

28: Under current (uC)

29: Limit error (LiT)

30: EEPROM write error (cF1)

31: EEPROM read error (cF2)

33: U-phase error (cd1)

34: V-phase error (cd2)

35: W-phase error (cd3)
36: cc (current clamp) hardware error (Hd0)
37: oc (over-current) hardware error (Hd1)
38: ov (over-voltage) hardware error (Hd2)
39: occ hardware error (Hd3)
40: Auto-tuning error (AUE)
41: PID loss ACI (AFE)
42: PG feedback error (PGF1)
43: PG feedback loss (PGF2)
44: PG feedback stall (PGF3)
45: PG slip error (PGF4)
48: ACI loss (ACE)
49: External fault (EF)
50: Emergency stop (EF1)
51: External base block (bb)
52: Enter wrong password three times and locked (Pcod)
53: SW code error (ccod)
54: Illegal command (CE1)
55: Illegal data address (CE2)
56: Illegal data value (CE3)
57: Data is written to read-only address (CE4)
58: Modbus transmission time-out (CE10)
60: Brake transistor error (bF)
61: Y-connection / Δ-connection switch error (ydc)
62: Deceleration energy backup error (dEb)
63: Over slip error (oSL)
64: Electric valve switch error (ryF)
65: Hardware error of PG card (PGF5)
68: Reverse direction of the speed feedback (SdRv)
69: Over speed rotation feedback (SdOr)
70: Large deviation of speed feedback (SdDe)
71: Watchdog (WDTT) (applied to 230V / 460V models)
72: STO Loss 1 (STL1)
73: Emergency stop for external safety (S1)
75: External brake error (applied to 230V / 460V models)
76: Safe torque off (STO)
77: STO Loss 2 (STL2)
78: STO Loss 3 (STL3)
82: Output phase loss U phase (OPHL)
83: Output phase loss V phase (OPHL)
84: Output phase loss W phase (OPHL)
85: PG ABZ line off (AboF) (PG-02U)

86: PG UVW line off (UvoF) (PG-02U)
87: Overload protection at low frequency (oL3)
89: Rotor position detection error (RoPd)
90: Forced to stop (FStp)
92: Pulse tuning Ld / Lq error (LEr)
93: CPU error 0 (TRAP) (applied to 230V / 460V models)
101: CANopen guarding error (CGdE)
102: CANopen heartbeat error (CHbE)
104: CANopen bus off error (CbFE)
105: CANopen index error (CidE)
106: CANopen station address error (CAdE)
107: CANopen memory error (CFrE)
111: InrCOM time-out error (ictE)
112: PM sensorless shaft lock error (SfLK)
142: Auto-tune error 1 (no feedback current error) (AUE1)
(applied to 230V / 460V models)
143: Auto-tune error 2 (motor phase loss error) (AUE2)
(applied to 230V / 460V models)
144: Auto-tune error 3 (no-load current I_0 measuring error) (AUE3)
(applied to 230V / 460V)
148: Auto-tune error 4 (leakage inductance Lsigma measuring error) (AUE4)
(applied to 230V / 460V models)
171: Over position error (oPEE)

- The parameters record when the fault occurs and forces a stop.
- When low-voltage at stop fault (LvS) occurs, the fault is not recorded. When low-voltage during operation faults (LvA, Lvd, Lvn) occur, the faults are recorded.
- When dEb function is valid and enabled, the drive executes dEb and records fault code 62 to Pr.06-17–Pr.06-22 simultaneously.

06-23	Fault Output Option 1
06-24	Fault Output Option 2
06-25	Fault Output Option 3
06-26	Fault Output Option 4

Default: 0

Settings 0–65535 sec. (refer to bit table for fault code)

- Use these parameters with multi-function output terminal (set Pr.06-23–Pr.06-26 to 35–38) for the specific requirement. When the fault occurs, the corresponding terminals are activated. Convert the binary value to decimal value before you enter the value for Pr.06-23–Pr.06-26.

Fault Code	bit0	bit1	bit2	bit3	bit4	bit5	bit6
	current	Volt.	OL	SYS	FBK	EXI	CE
0: No fault record							

Fault Code	bit0	bit1	bit2	bit3	bit4	bit5	bit6
	current	Volt.	OL	SYS	FBK	EXI	CE
1: Over-current during acceleration (ocA)	●						
2: Over-current during deceleration (ocd)	●						
3: Over-current during steady operation (ocn)	●						
4: Ground fault (GFF)	●						
5: IGBT short circuit between upper bridge and lower bridge (occ)	●						
6: Over-current at stop (ocS)	●						
7: Over-voltage during acceleration (ovA)		●					
8: Over-voltage during deceleration (ovd)		●					
9: Over-voltage at constant speed (ovn)		●					
10: Over-voltage at stop (ovS)		●					
11: Low-voltage during acceleration (LvA)		●					
12: Low-voltage during deceleration (Lvd)		●					
13: Low-voltage at constant speed (Lvn)		●					
14: Low-voltage at stop (LvS)		●					
15: Phase loss protection (OrP)		●					
16: IGBT overheating (oH1)			●				
17: Heatsink overheating (oH2)			●				
18: IGBT temperature detection failure (tH1o)			●				
19: Capacitor hardware error (tH2o)			●				
21: Over load (oL)			●				
22: Electronic thermal relay 1 protection (EoL1)			●				
23: Electronic thermal relay 2 protection (EoL2)			●				
24: Motor overheating (oH3) (PTC / PT100)			●				
26: Over torque 1 (ot1)			●				
27: Over torque 2 (ot2)			●				
28: Under current (uC)	●						
29: Limit error (LiT)						●	
30: EEPROM write error (cF1)				●			
31: EEPROM read error (cF2)				●			
33: U-phase error (cd1)				●			
34: V-phase error (cd2)				●			
35: W-phase error (cd3)				●			
36: cc (current clamp) hardware error (Hd0)				●			
37: oc (over-current) hardware error (Hd1)				●			
38: ov (over-voltage) hardware error (Hd2)				●			
39: occ hardware error (Hd3)				●			
40: Auto-tuning error (AUE)				●			

Fault Code	bit0	bit1	bit2	bit3	bit4	bit5	bit6
	current	Volt.	OL	SYS	FBK	EXI	CE
41: PID loss ACI (AFE)					●		
42: PG feedback error (PGF1)					●		
43: PG feedback loss (PGF2)					●		
44: PG feedback stall (PGF3)					●		
45: PG slip error (PGF4)					●		
48: ACI loss (ACE)					●		
49: External fault (EF)						●	
50: Emergency stop (EF1)						●	
51: External base block (bb)						●	
52: Enter wrong password three times and locked (Pcod)				●			
53: SW code error (ccod)				●			
54: Illegal command (CE1)							●
55: Illegal data address (CE2)							●
56: Illegal data value (CE3)							●
57: Data is written to read-only address (CE4)							●
58: Modbus transmission time-out (CE10)							●
60: Brake transistor error (bF)						●	
61: Y-connection / Δ-connection switch error (ydc)						●	
62: Deceleration energy backup error (dEb)		●					
63: Over slip error (oSL)					●		
64: Electric valve switch error (ryF)						●	
65: Hardware error of PG card (PGF5)						●	
68: Reverse direction of the speed feedback (SdRv)					●		
69: Over speed rotation feedback (SdOr)					●		
70: Large deviation of speed feedback (SdDe)					●		
71: Watchdog (WDTT) (applied to 230V / 460V models)				●			
72: STO loss 1 (STL1)				●			
73: Emergency stop for external safety (S1)				●			
75: External brake error (Brk) (applied to 230V / 460V models)						●	
76: Safe torque off (STO)				●			
77: STO Loss 2 (STL2)				●			
78: STO Loss 3 (STL3)				●			
82: Output phase loss U phase (OPHL)	●						
83: Output phase loss V phase (OPHL)	●						
84: Output phase loss W phase (OPHL)	●						

Fault Code	bit0	bit1	bit2	bit3	bit4	bit5	bit6
	current	Volt.	OL	SYS	FBK	EXI	CE
85: PG ABZ line off (AboF) (PG-02U)					●		
86: PG UVW line off (UvoF) (PG-02U)					●		
87: Overload protection at low frequency (oL3)			●				
89: Rotor position detection error (RoPd)					●		
90: Forced to stop (FStp)				●			
92: Pulse tuning Ld / Lq error (LEr)	●						
93: CPU error 0 (TRAP) (applied to 230V / 460V models)				●			
101: CANopen guarding error (CGdE)							●
102: CANopen heartbeat error (CHbE)							●
104: CANopen bus off error (CbFE)							●
105: CANopen index error (CidE)							●
106: CANopen station address error (CAdE)							●
107: CANopen memory error (CFrE)							●
111: InrCOM time-out error (ictE)							●
112: PM sensorless shaft lock error (SfLK)					●		
142: Auto-tune error 1 (no feedback current error) (AUE1) (applied to 230V / 460V models)	●						
143: Auto-tune error 2 (motor phase loss error) (AUE2) (applied to 230V / 460V models)				●			
144: Auto-tune error 3 (no-load current I_0 measuring error) (AUE3) (applied to 230V / 460V models)	●						
148: Auto-tune error 4 (leakage inductance Lsigma measuring error) (AUE4) (applied to 230V / 460V models)	●						
171: Over position error (oPEE)				●			

06-29 PTC Detection Selection / PT100 Motion

Default: 0

Settings 0: Warn and continue operation
1: Fault and ramp to stop
2: Fault and coast to stop
3: No warning

Sets the operation mode of a drive after detecting PTC / PT100 / KTY84.

06-30 PTC Level / KTY84 Level

Default: 50.0

Settings 0.0–100.0 %

When Pr.06-86=0, the setting range is 0.0–100.0, with unit %, and the default is 50.0%.
When Pr.06-86=1, the setting range is 0.0–150.0, with unit ºC, and the default is 125.0ºC

- Sets AVI/ACI/AUI analog input function Pr.03-00–03-02 to 6 [thermistor (PTC) input value].
- The AUI terminal does not support KTY84~~-130~~.
- Use this to set the PTC / KTY84 level, the corresponding value for 100% is the analog input maximum value.
- When Pr.06-86 is set as KTY84, Pr.06-30 setting range and the unit changes automatically.

06-31 Frequency Command at Malfunction

Default: Read only

Settings 0.00–599.00 Hz

- When a malfunction occurs, check the current frequency command. If it happens again, it overwrites the previous record.

06-32 Output Frequency at Malfunction

Default: Read only

Settings 0.00–599.00 Hz

- When a malfunction occurs, check the current output frequency. If it happens again, it overwrites the previous record.

06-33 Output Voltage at Malfunction

Default: Read only

Settings 0.0–6553.5 V

- When a malfunction occurs, check the current output voltage. If it happens again, it overwrites the previous record.

06-34 DC bus Voltage at Malfunction

Default: Read only

Settings 0.0–6553.5 V

- When a malfunction occurs, check the current DC bus voltage. If it happens again, it overwrites the previous record.

06-35 Output Current at Malfunction

Default: Read only

Settings 0.0–6553.5 Amp

- When a malfunction occurs, check the current output current. If it happens again, it overwrites the previous record.

06-36 IGBT Temperature at Malfunction

Default: Read only

Settings -3276.7–3276.7ºC

- When a malfunction occurs, check the current IGBT temperature. If it happens again, it overwrites the previous record.

06-37 Capacitance Temperature at Malfunction

Default: Read only

Settings -3276.7–3276.7ºC

📖 When a malfunction occurs, check the current capacitance temperature. If it happens again, it overwrites the previous record.

06-38 Motor Speed in rpm at Malfunction

Default: Read only

Settings -32767–32767 rpm

📖 When a malfunction occurs, check the current motor speed in rpm. If it happens again, it overwrites the previous record.

06-39 Torque Command at Malfunction

Default: Read only

Settings -32767–32767%

📖 When a malfunction occurs, check the current torque command. If it happens again, it overwrites the previous record.

06-40 Status of the Multi-function Input Terminal at Malfunction

Default: Read only

Settings 0000h–FFFFh

06-41 Status of the Multi-function Output Terminal at Malfunction

Default: Read only

Settings 0000h–FFFFh

📖 When a malfunction occurs, check the current status of multi-function input / output terminals. If it happens again, it overwrites the previous record.

06-42 Drive Status at Malfunction

Default: Read only

Settings 0000h–FFFFh

📖 When a malfunction occurs, check the current drive status (communication address 2101H). If it happens again, it overwrites the previous record.

06-44 STO Latch Selection

Default: 0

Settings 0: STO Latch
1: STO No latch

📖 Pr.06-44=0: STO Alarm Latch. After you clear the cause of the STO Alarm, use a Reset command to clear the STO Alarm.

📖 Pr.06-44=1: STO Alarm no Latch. After you clear the cause of the STO Alarm, the STO Alarm clears automatically.

📖 All of STL1–STL3 errors are “Alarm Latch” mode (in STL1–STL3 mode, the Pr.06-44 function is not available).

06-45 Output Phase Loss Detection Action (OPHL)

Default: 3

Settings 0: Warn and continue operation
1: Fault and ramp to stop
2: Fault and coast to stop
3: No warning

The OPHL protection is enabled when Pr.06-45 is not set to 3.

06-46 Detection Time of Output Phase Loss

Default of 230V / 460V models: 3.000
Default of 575V / 690V models: 0.500

Settings 0.000–65.535 sec.

06-47 Current Detection Level for Output Phase Loss

Default: 1.00

Settings 0.00–100.00%

06-48 DC Brake Time of Output Phase Loss

Default: 0.000

Settings 0.000–65.535 sec.

There are two situations for the output phase loss detection: “detect when the drive is in operation” and “detect before operation”. Setting Pr.06-48 to 0 disables the OPHL detection function before operation.

The status of output phase loss detection are as following:

- Status 1: The drive is in operation
  When any phase is less than the Pr.06-47 setting, and exceeds the Pr.06-46 setting time, the drive executes according to the Pr.06-45 setting.

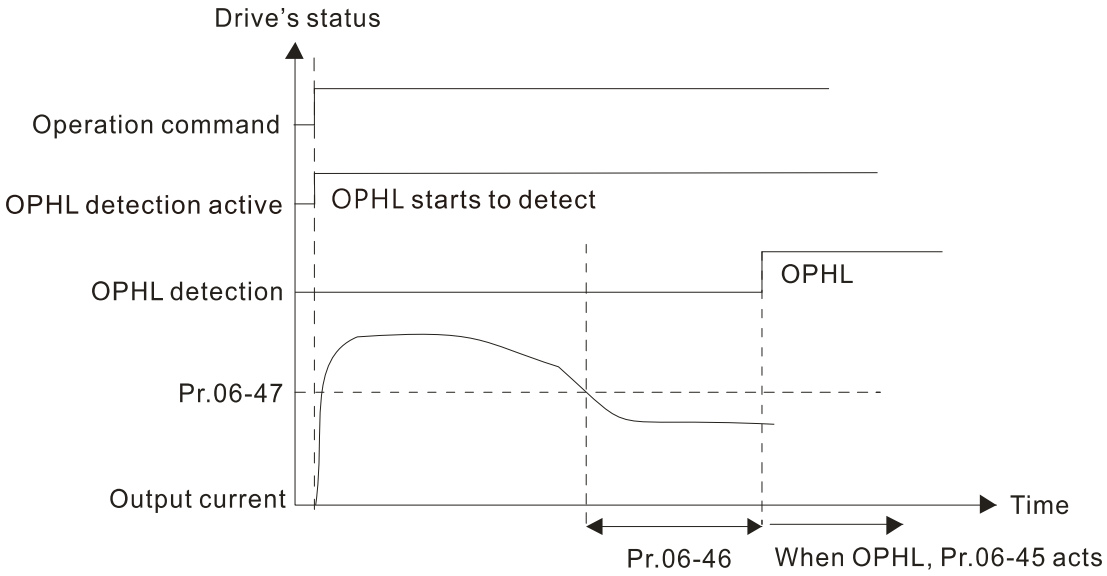

Status 2: The drive is in STOP; Pr.06-48 = 0 ; Pr.07-02 ≠ 0
After the drive starts, the DC brake operates according to Pr.07-01 and Pr.07-02. During this period, OPHL detection is not active. After the DC brake action is completed, the drive starts to run, and enables the OPHL protection as mentioned above for status 1.

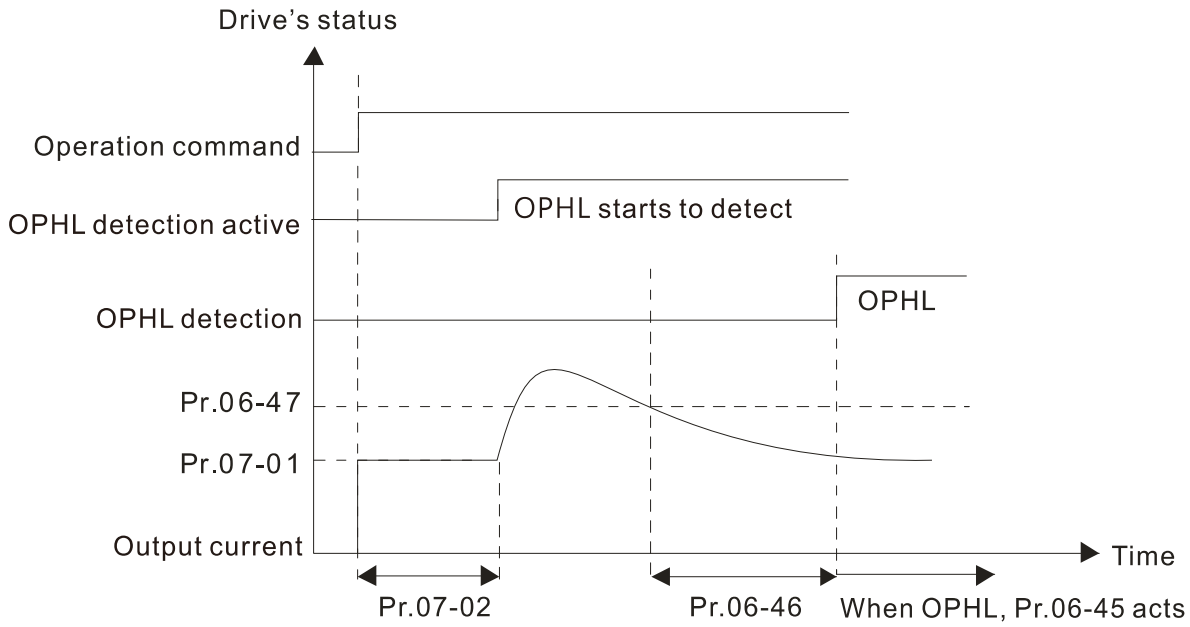

Status 3: The drive is in STOP; Pr.06-48 ≠ 0; Pr.07-02 ≠ 0

When the drive starts, it executes Pr.06-48 first, and then executes Pr.07-02 (DC brake). The DC brake current level in this state includes two parts: one is 20 times the Pr.06-47 setting value in Pr.06-48 setting time; the other is the Pr.07-02 setting value in Pr.07-01 setting time. The total DC brake time T = Pr.06-48 + Pr.07-02.

Status 3-1: Pr.06-48 ≠ 0, Pr.07-02 ≠ 0 (No OPHL detected before operation)

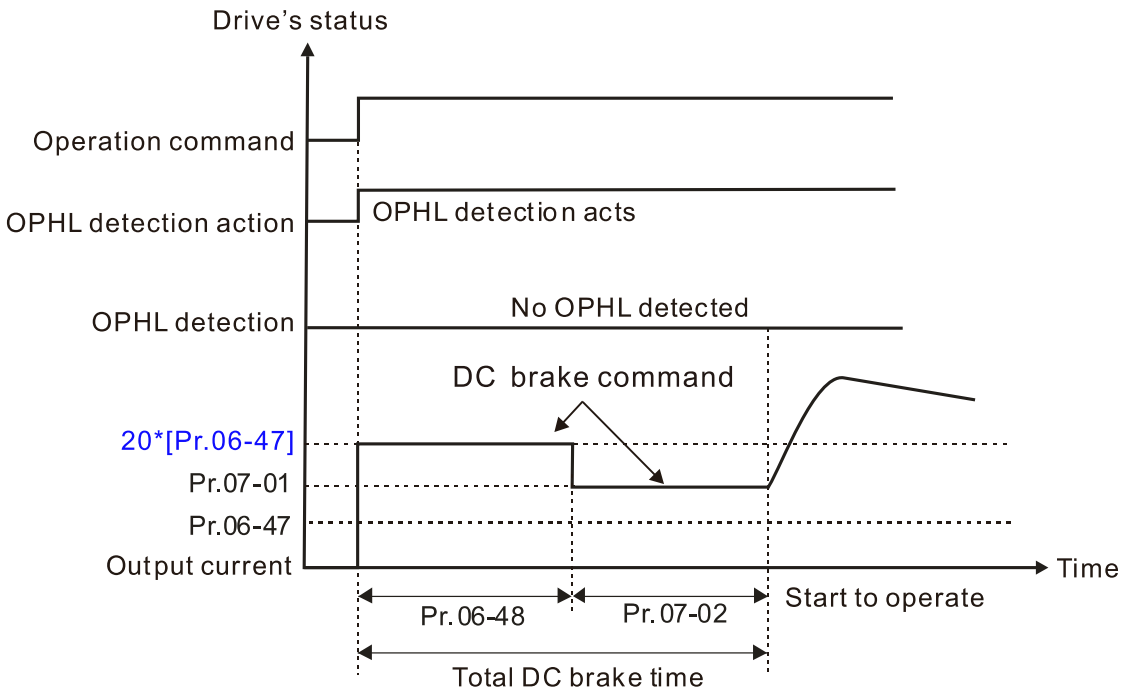

Status 3-2: Pr.06-48≠0, Pr.07-20≠0 (OPHL detected before operation)

In this period, if an OPHL occurs within the time for Pr.06-48, the drive executes the Pr.06-45 setting after the drive starts counting for half the time of Pr.06-48.

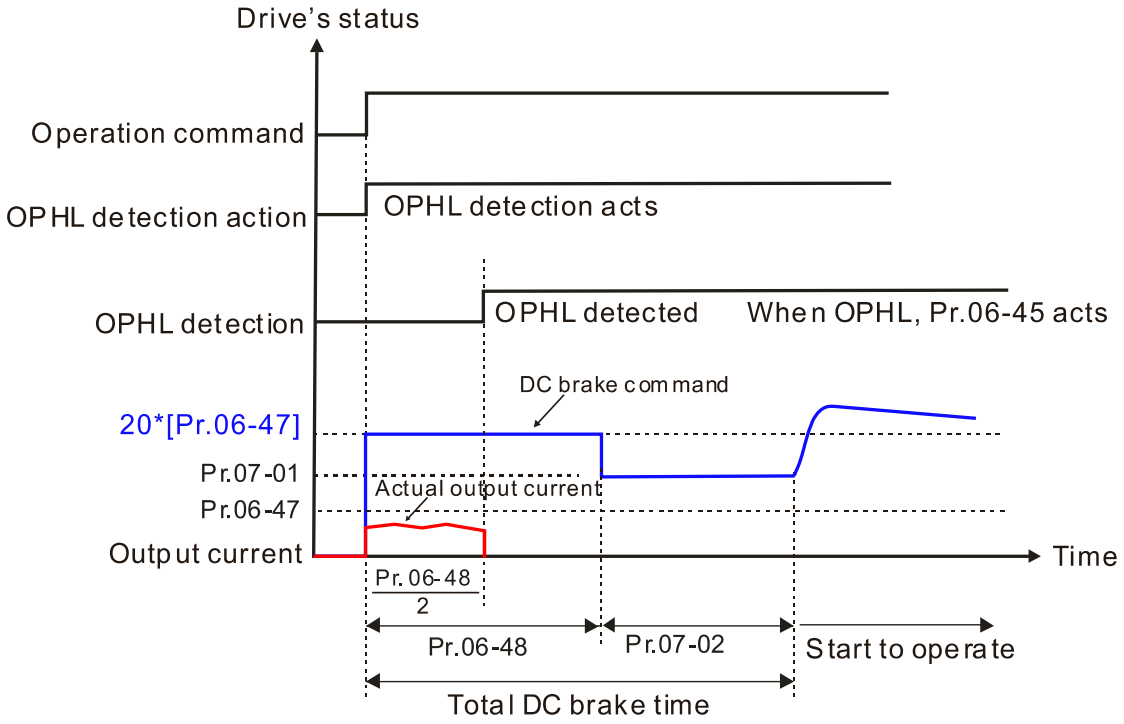

Status 4: The drive is in STOP; Pr.06-48 ≠ 0; Pr.07-02 = 0

When the drive starts, it executes Pr.06-48 as the DC brake. The DC brake current level is 20 times the Pr.06-47 setting value.

Status 4-1: Pr.06-48 ≠ 0, Pr.07-02 = 0 (No OPHL detected before operation)

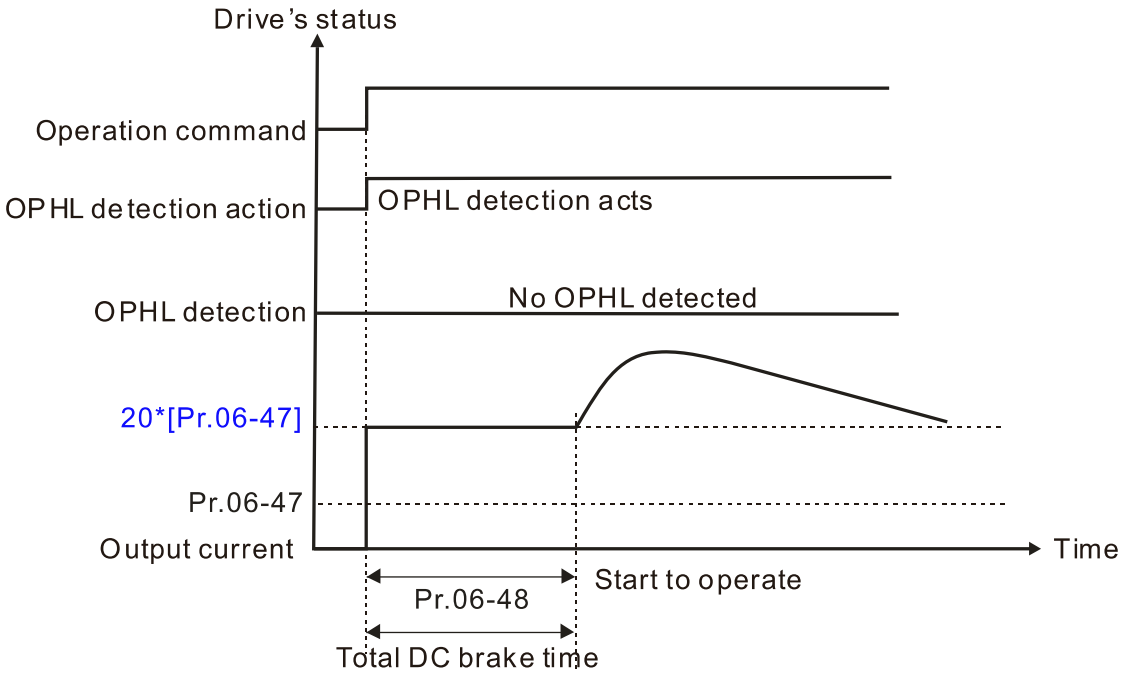

Status 4-2: Pr.06-48 ≠ 0, Pr.07-02 = 0 (OPHL detected before operation)

In this period, if an OPHL occurs within the time for Pr.06-48, the drive executes the Pr.06-45 setting after the drive starts counting for half the time of Pr.06-48.

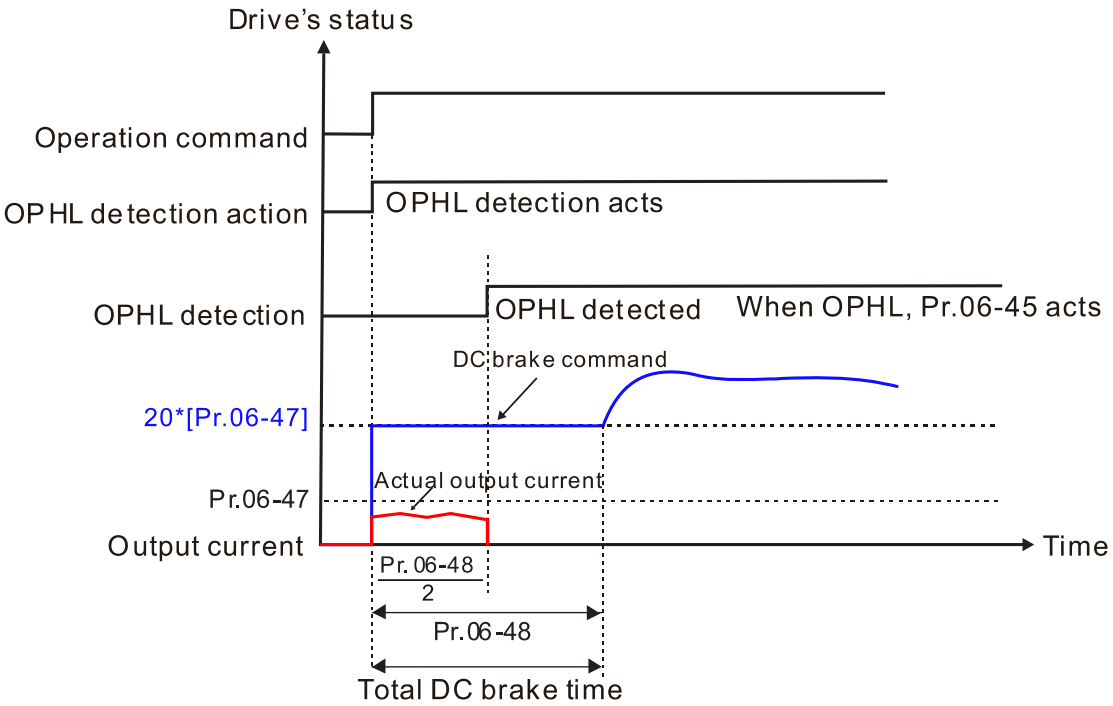

06-49 LvX Auto-reset

Default: 0

Settings 0: Disable
1: Enable

06-50 Time for Input Phase Loss Detection

Default: 0.20

Settings 0.00–600.00 sec.

06-51 Capacitor oH Warning Level (applied to 230V / 460V models)

Default: Depending on the model power

Settings 0.0–110.0 degree

- Sets the over-heat warning level of the drive's internal DC bus capacitor.
- When the setting is less than 10.0 degree, the drive uses its internal capacitor oH warning level.

06-52 Ripple of Input Phase Loss

Default:
30.0 / 60.0 / 75.0 / 90.0

Settings 230V models: 0.0–160.0 V_{DC}
460V models: 0.0–320.0 V_{DC}
575V models: 0.0–400.0 V_{DC}
690V models: 0.0–480.0 V_{DC}

06-53 Detected Input Phase Loss (OrP) Action

Default: 0

Settings 0: Fault and ramp to stop
1: Fault and coast to stop

- When the drive detects the DC bus ripple exceeds the setting for Pr.06-52, and lasts for the time of Pr.06-50 plus 30 seconds, the drive executes the input phase loss protection according to Pr.06-53.
- During the time of Pr.06-50 plus 30 seconds, if the DC bus ripple drops lower than the setting for Pr.06-52, the Orp protection recalculates.

06-55 Derating Protection

Default: 0

Settings 0: Auto-decrease carrier frequency and limit output current
1: Constant carrier frequency and limit output current
2: Auto-decrease carrier frequency

- Refer to Pr.00-01 (Maximum Operation Frequency) for allowable maximum output frequency in each control mode.
- The corresponded carrier frequency lower limit under each control mode:
  - VF, SVC, VFPG, and PM Sensorless: Maximum operation frequency (Pr.01-00) × 10 minimum sampling point limit.
  - FOCPG, IMFOC Sensorless, and IPM Sensorless: Maximum operation frequency (Pr.01-00) × 20 minimum sampling point limit.
  - Example: Maximum operation frequency (Pr.01-00) is 400 Hz, the minimum sampling point limit of VF, SVC, VFPG, and PM Sensorless is 4 kHz (=400 Hz × 10). The minimum sampling point limit of FOCPG, IMFOC Sensorless, and IPM Sensorless is 8kHz (=400 Hz × 20).
- Refer to Section 9-7 Derating for Ambient Temperature, Altitude and Carrier Frequency for the derating ratio.
- Setting 0:
  - Actual over-current stall prevention level = derating ratio × over-current stall prevention level (Pr.06-03 and 06-04)
  - Rated current derating level: derating ratio × rated current (Pr.00-01)
  - When the operating point is greater than the derating curve, the carrier frequency (Fc) output by the drive decreases automatically according to the ambient temperature, overload output current and overload time.
  - Applicable conditions: If overloads are not frequent, and the concern is only about the carrier frequency operating with the rated current for a long time, and changes to the carrier wave due to short overload are acceptable, set to 0.
  - Take VFD007C43A-21 Heavy Duty for example: ambient temperature 50ºC, UL Open Type, and independent installation. When the carrier frequency is set to 15 kHz, it corresponds to 72% of the derating ratio. When the output current is higher than this value, it automatically decreases the carrier frequency according to the ambient temperature, output current and overload time (for example: set Pr.06-03 to 200%). At this time, the over-current stall

prevention level is 144% (=72% × 200%) of the rated current (Pr.00-01).

📖 Setting 1:

- Actual over-current stall prevention level = derating ratio × over-current stall prevention level (Pr.06-03 and 06-04)
- When the operating point is greater than the derating curve, the carrier frequency (Fc) output by the drive is fixed to the default value.
- Applicable conditions: Select this mode if the change of carrier frequency and motor noise caused by ambient temperature and frequent overload are not acceptable. Refer to Pr.00-17.
- Take VFD007C43A-21 Heavy Duty for example: ambient temperature 50ºC, UL Open Type, and independent installation. When the carrier frequency is set to 15 kHz, it corresponds to 72% of the derating ratio. When the output current is higher than this value, the carrier frequency unchanged. However, if the overload continues for a long time, the oH1 fault (IGBT overheating) or oL fault (the drive overload) will be triggered due to the IGBT temperature rise, and the drive will eventually stop.

📖 Setting 2:

- Actual over-current stall prevention level = over-current stall prevention level (Pr.06-03 and 06-04)
- Rated current derating level: derating ratio × rated current (Pr.00-01)
- The protection method and action are set to 0, the carrier frequency (Fc) output by the drive decreases automatically according to the ambient temperature, overload output current and overload time, but does not change the over-current stall prevention level limit. The overload capacity is 180% rated current (Pr.00-01) in heavy duty and 200% rated current (Pr.00-01) in super heavy duty.
- Applicable conditions: It can provide a higher starting output current than Pr.06-55 = 0 when the carrier frequency (Pr.00-17) setting is greater than the default.
- Take VFD007C43A-21 Heavy Duty for example: ambient temperature 50ºC, UL Open Type, and independent installation. When the carrier frequency is set to 15 kHz, it corresponds to 72% of the derating ratio. When the output current is higher than this value, the carrier frequency (Fc) output by the drive decreases automatically according to the ambient temperature, overload output current and overload time. If Pr.06-03 is 200%, the over-current stall prevention level is 200% of the rated current (Pr.00-01).
- The ambient temperature 60ºC corresponds to 72% × 80% of the rated output current.

📖 Use with the settings for Pr.00-16 and Pr.00-17.

📖 The ambient temperature also affects the derating; refer to Section 9-7 “Ambient Temperature Derating Curve”. Take VFD007C43A-21 Heavy Duty for example: ambient temperature 50ºC, UL Open Type, and independent installation. When the carrier frequency is set to 15 kHz, it corresponds to 72% of the rated output current. If the ambient temperature is 60ºC, it corresponds to 57.6% (=72% × 100% - (60-50) × 2%) of the rated output current.

06-56 PT100 Voltage Level 1

Default: 5.000

Settings 0.000–10.000 V

06-57 PT100 Voltage Level 2

Default: 7.000

Settings 0.000–10.000V

Condition settings: PT100 voltage level Pr.06-57 > Pr.06-56.

06-58 PT100 Level 1 Frequency Protection

Default: 0.00

Settings 0.00–599.00 Hz

06-59 PT100 Activation Level 1 Protection Frequency Delay Time

Default: 60

Settings 0–6000 sec.

PT100 operation instructions

(1) Use voltage type analog input (AVI, AUI, and ACI voltage 0–10 V) and select PT100 mode.

(2) Select one of the voltage type analog inputs below: (a) AVI (Pr.03-00=11), (b) AUI (Pr.03-02=11), or (c) ACI (Pr.03-01=11 and Pr.03-29=1).

(3) When selecting Pr.03-01 = 11 and Pr.03-29 = 1, you must switch SW4 to 0–10 V for the external I/O board.

(4) The AFM2 outputs constant voltage or current, then Pr.03-23 = 23. You must switch AFM2 SW2 to 0–20 mA for the external I/O board, and set AFM2 output level to 45% (Pr.03-33 = 45%) of 20 mA = 9 mA.

(5) Use Pr.03-33 to adjust the constant voltage or constant current of the AFM2 output; the setting range is 0–100.00%.

(6) There are two types of action levels for PT100. The diagram below shows the PT100 protecting action.

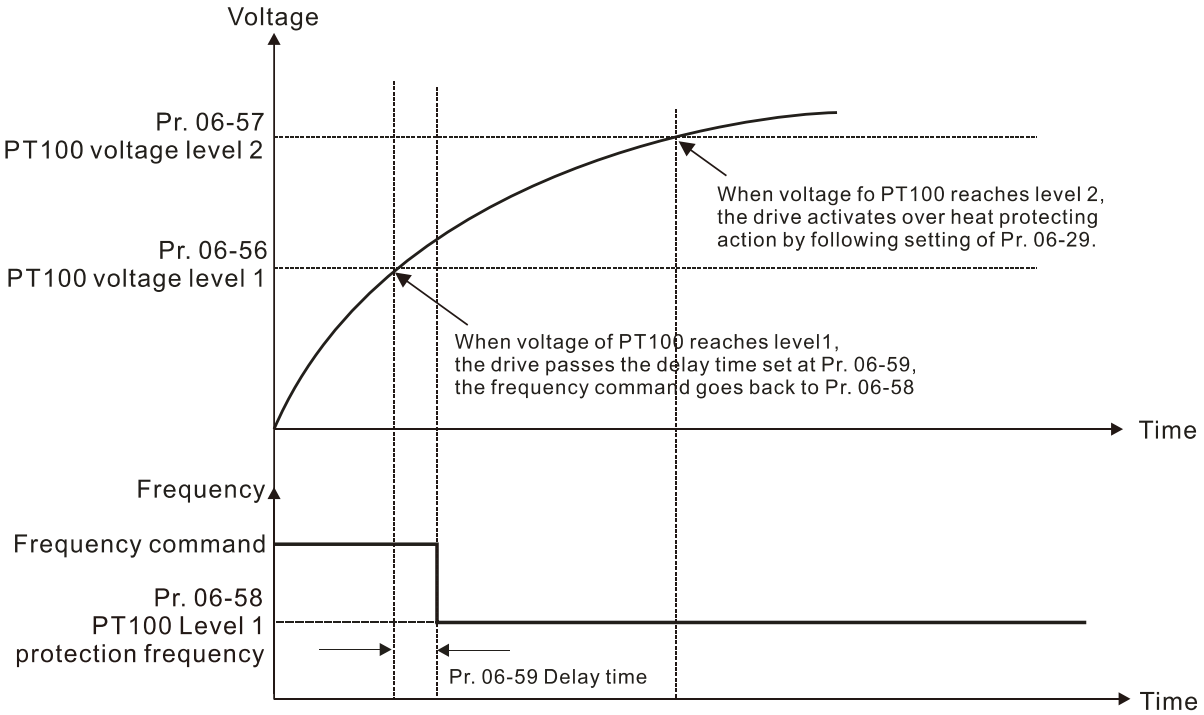

(1) PT100 wiring diagram:

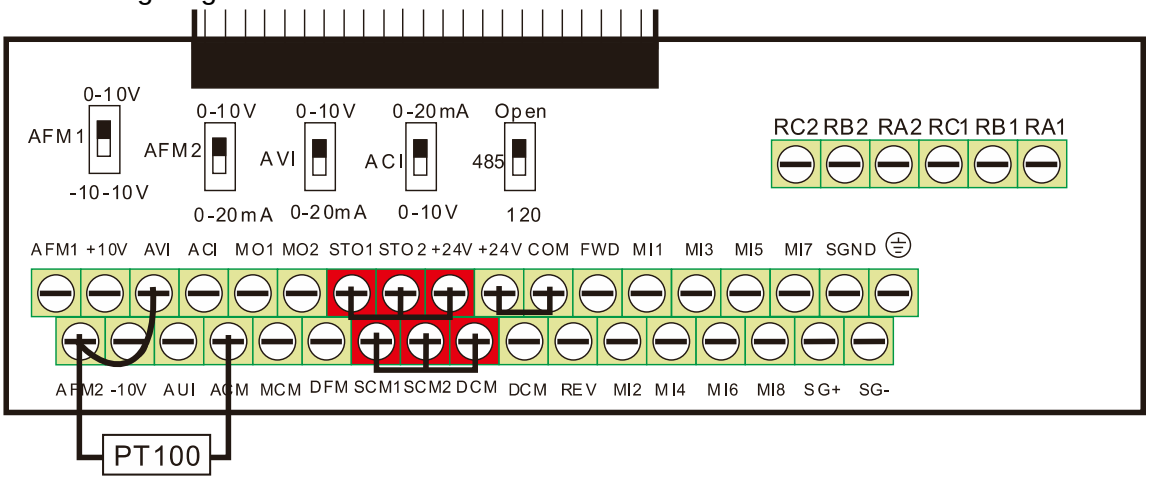

Figure 1

When Pr.06-58 = 0.00 Hz, PT100 function is disabled.

Case:

When using PT100, if the motor temperature is higher than 135ºC (275°F), the drive starts to count the delay time for auto-deceleration (Pr.06-59). The drive decreases the motor frequency to the setting for Pr.06-58 when it reaches the delay time count value. The drive operates at the frequency set for Pr.06-58 until the motor temperature is lower than 135°C (275°F). If the motor temperature is higher than 150°C (302°F), the drive automatically decelerates to STOP and displays the warning “oH3”.

Set up process:

1. Switch AFM2 to 0–20 mA on the I/O control terminal block. (Refer to Figure 1, PT100 wiring diagram)
2. Wiring (Refer to Figure 1, PT100 wiring diagram):
   Connect external terminal AFM2 to “+”
   Connect external terminal ACM to “-“
   Connect external terminals AFM2 and AVI to “short circuit ”
3. Set Pr.03-00 = 11, Pr.03-23 = 23 or Pr.03-33 = 45% (9 mA)
4. Refer to the RTD temperature and resistance comparison table
   Temperature = 135ºC, resistance = 151.71 Ω; input current: 9 mA, voltage: about 1.37 V_{DC}
   Temperature = 150ºC, resistance = 157.33 Ω; input current: 9 mA, voltage: about 1.42 V_{DC}
5. When the RTD temperature > 135ºC, the drive decelerates to the specified operation frequency automatically. Then, Pr.06-56 = 1.37 V and Pr.06-58 = 10 Hz. (When Pr.06-58 = 0, it disables the specified operation frequency.)
6. When the RTD temperature > 150ºC, the drive outputs a fault, decelerates to STOP, and displays the warning “oH3”. Then, Pr.06-57 = 1.42 V and Pr.06-29 = 1 (fault and ramp to stop).

06-60 Software Detection GFF Current Level

Default: 60.0

Settings 0.0–200.0%

06-61 Software Detection GFF Filter Time

Default: 0.10

Settings 0.00–655.35 sec.

When the drive detects that the unbalanced three-phase output current is higher than the setting for Pr.06-60, GFF protection activates. The drive then stops output.

06-62 dEb Reset Bias Level (applied to 230V / 460V models)

Default: 20.0 / 40.0

Settings 230V models: 0.0–100.0 V_{DC}
460V models: 0.0–200.0 V_{DC}

Prevents action vibration caused by dEb action level = reset level. dEb active level + Pr.06-62 = dEb reset bias level.

06-63 Operation Time of Fault Record 1 (Days)
06-65 Operation Time of Fault Record 2 (Days)
06-67 Operation Time of Fault Record 3 (Days)
06-69 Operation Time of Fault Record 4 (Days)

Default: Read only

Settings 0–65535 days

06-64 Operation Time of Fault Record 1 (Minutes)
06-66 Operation Time of Fault Record 2 (Minutes)
06-68 Operation Time of Fault Record 3 (Minutes)
06-70 Operation Time of Fault Record 4 (Minutes)

Default: Read only

Settings 0–1439 min.

If there is any malfunctions when the drive operates, Pr.06-17–Pr.06-22 record the malfunctions, and Pr.06-63–Pr.06-70 record the operation time for four sequential malfunctions. Check if there is any problem with the drive according to the interval of the recorded fault.

Example:

The first error: ocA occurs after motor drive operates for 1000 minutes.

The second error: ocd occurs after another 1000 minutes.

The third error: ocn occurs after another 1000 minutes.

The fourth error: ocA occurs after another 1000 minutes.

The fifth error: ocd occurs after another 1000 minutes.

The sixth error: ocn occurs after another 1000 minutes.

Then Pr.06-17–06-22 and Pr.06-63–06-70 are recorded as follows:

	1st fault	2nd fault	3rd fault	4th fault	5th fault	6th fault
Pr.06-17	ocA	ocd	ocn	ocA	ocd	ocn
Pr.06-18	0	ocA	ocd	ocn	ocA	ocd
Pr.06-19	0	0	ocA	ocd	ocn	ocA
Pr.06-20	0	0	0	ocA	ocd	ocn
Pr.06-21	0	0	0	0	ocA	ocd
Pr.06-22	0	0	0	0	0	ocA
Pr.06-63	0	1	2	2	3	4
Pr.06-64	1000	560	120	1120	680	240
Pr.06-65	0	0	1	2	2	3
Pr.06-66	0	1000	560	120	1120	680
Pr.06-67	0	0	0	1	2	2
Pr.06-68	0	0	1000	560	120	1120
Pr.06-69	0	0	0	0	1	2
Pr.06-70	0	0	0	1000	560	120

※By examining the time record, you can see that that the last fault (Pr.06-17) happened after the drive ran for 4 days and 240 minutes.

06-71 Low Current Setting Level

Default: 0.0

Settings 0.0–100.0%

06-72 Low Current Detection Time

Default: 0.00

Settings 0.00–360.00 sec.

06-73 Low Current Action

Default: 0

Settings 0: No function
1: Fault and coast to stop
2: Fault and ramp to stop by the 2nd deceleration time
3: Warn and continue operation

- The drive operates according to the setting for Pr.06-73 when the output current is lower than the setting for Pr.06-71 and when the time of the low current exceeds the detection time for Pr.06-72. Use this parameter with the multi-function output terminal = 44 (low current output).
- The low current detection function does not execute when the drive is in sleep or standby status.
- Sets Pr.06-71 low current level according to the drive's rated current, the equation is Pr.00-01 (drive's rated current) x Pr.06-71 (low current setting level)% = low current detection level (A). The drive changes the setting for Pr.00-01 (rated current) according to the setting for Pr.00-16 (load selection).

06-86 PTC Type

Default: 0

Settings 0: PTC

1: KTY84-130

- When using KTY84-130, a divider resistance (2 kΩ , power > 1/4W, ±0.1%) is needed.
- Wiring diagram is as below:

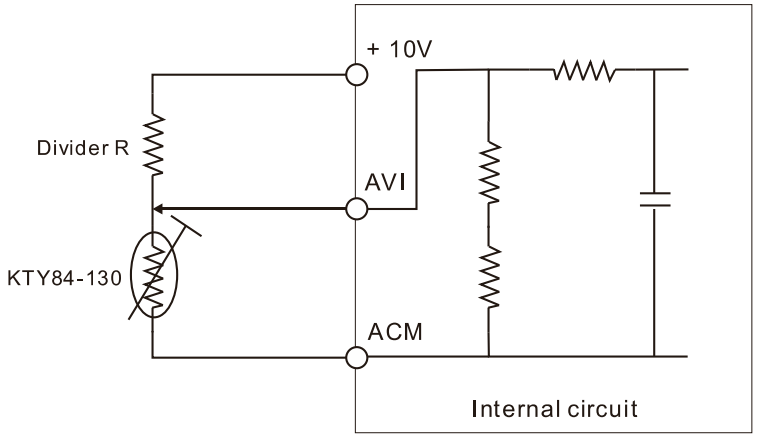

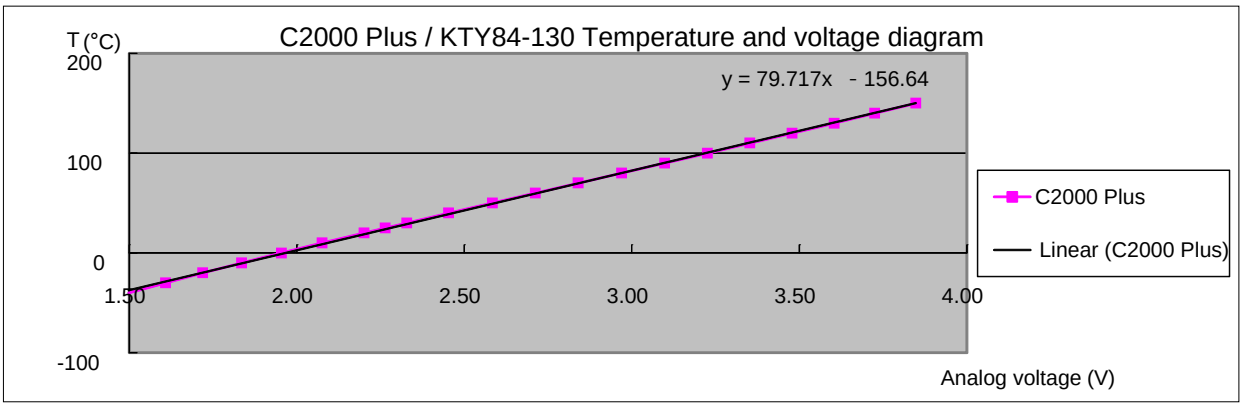

- When the temperature exceeds the setting level, an oH3 error occurs to the drive. Reset conditions: when the temperature is below the trigger level -5ºC, the oH3 error is cleared.
- When the KTY is not connected, or the KTY is burned, the calculated temperature is beyond -40–150ºC, the temperature is displayed as its lower limit (-40ºC) or upper limit (150ºC) without additional error information. At this time, the drive still trips up the oH3 error, check if the installation is correct.
- When the temperature detection warning occurs to the KTY-84, select the action according to Pr.06-29.

07 Special Parameters

✓ You can set this parameter during operation.

The following are abbreviations for different types of motors:

- IM: Induction motor
- PM: Permanent magnet synchronous AC motor
- IPM: Interior permanent magnet synchronous AC motor
- SPM: Surface permanent magnet synchronous AC motor
- SynRM: Synchronous reluctance motor

✓ 07-00 Software Brake Chopper Action Level

Default:
370.0 / 740.0 / 895.0 / 1057.0

Settings 230V models: 350.0–450.0 V_{DC}
460V models: 700.0–900.0 V_{DC}
575V models: 850.0–1116.0 V_{DC}
690V models: 939.0–1318.0 V_{DC}

📖 Sets the DC bus voltage at which the brake chopper is activated. Choose a suitable brake resistor to achieve the best deceleration. Refer to Chapter 7 Optional Accessories for information about brake resistors.

📖 This parameter is only valid for the models below 30kW of 460 models and 22kW of 230 models .

✓ 07-01 DC Brake Current Level

Default: 0

Settings 0–100%

📖 100% corresponds to the rated current of the drive (Pr.00-01).

📖 Sets the level of the DC brake current output to the motor at start-up and stop. It is recommended that you start with a low DC brake current level and then increase until you reach the proper holding torque. However, the DC brake current cannot exceed the motor's rated current to prevent the motor from burnout. DO NOT use the DC brake for mechanical retention, otherwise injury or accident may occur.

📖 The PM has the magnetic field itself, using the DC brake may possibly cause the motor run in a reverse direction, therefore, it is not recommended to use DC brake for PM.

✓ 07-02 DC Brake Time at Start-up

Default: 0.0

Settings 0.0–60.0 sec.

📖 The motor may continue rotating after the drive stops output due to external forces or the inertia of the motor itself. If you use the drive with the motor rotating, it may cause motor damage or trigger drive protection due to over-current. This parameter outputs DC current, generating torque to force the motor stop to get a stable start before motor operation. This parameter determines the duration of the DC brake current output to the motor when the drive starts up. Setting this parameter to 0.0 disables the DC brake at start-up.

- The PM has the magnetic field itself, using the DC brake may possibly cause the motor run in a reverse direction, therefore, it is not recommended to use DC brake for PM. Use Pr.10-49 zero voltage command to force the motor decelerate or to stop.

07-03 DC Brake Time at STOP

Default: 0.0

Settings 0.0–60.0 sec.

- The motor may continue rotating after the drive stops output due to external forces or the inertia of the motor itself. This parameter outputs DC current, generating torque to force the drive stop after the drive stops output to make sure that the motor stops.
- This parameter determines the duration of the DC brake current output to the motor when braking. To enable the DC brake at STOP, you must set Pr.00-22 (Stop Method) to 0 (ramp to stop). Set this parameter to 0.0 to disable the DC brake at stop .
- Related parameters: Pr.00-22 Stop Method, Pr.07-04 DC Brake Frequency at STOP.

07-04 DC Brake Frequency at STOP

Default: 0.00

Settings 0.00–599.00 Hz

- Determines the start frequency of the DC brake before the drive ramps to stop. When this setting is less than Pr.01-09 (Start-up Frequency), the start frequency for the DC brake begins at the minimum frequency.

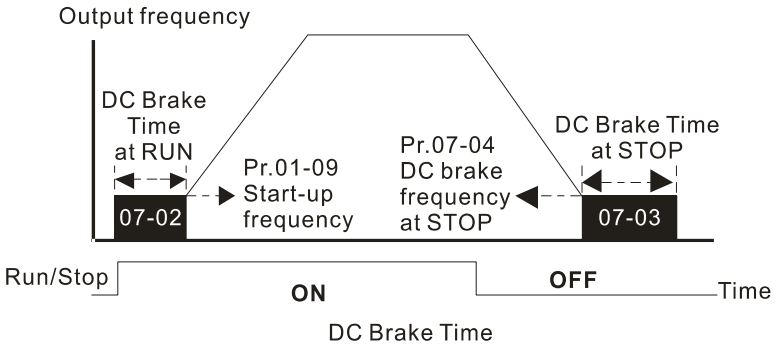

- Use the DC brake before running the motor when the load is movable at stop, such as with fans and pumps. The motor is in free running status and in unknown rotation direction before the drive starts up. Execute the DC brake before you start the motor.
- Use the DC Brake at STOP when you need to brake the motor quickly or to control the positioning, such as with cranes or cutting machines.

07-05 Voltage Increasing Gain

Default: 100

Settings 1–200%

- When using speed tracking, adjust Pr.07-05 to slow down the increasing voltage gain if there are errors such as oL or oc; however, the speed tracking time will be longer.

07-06 Restart after Momentary Power Loss

Default: 0

Settings 0: Stop operation
1: Speed tracking by speed before the power loss
2: Speed tracking by minimum output frequency

- Determines the operation mode when the drive restarts from a momentary power loss.
- The power system connected to the drive may power off momentarily due to many reasons. This function allows the drive to keep outputting voltages after the drive is repowered and does not cause the drive to stop.
- Setting 1: Frequency tracking begins before momentary power loss and accelerates to the master Frequency command after the drive output frequency and motor rotator speed are synchronous. Use this setting when there is a lot of inertia with little resistance on the motor load. For example, in equipment with a large inertia flywheel, there is NO need to wait until the flywheel stops completely after a restart to execute the operation command; therefore, it saves time.
- Setting 2: Frequency tracking starts from the minimum output frequency and accelerates to the master Frequency command after the drive output frequency and motor rotator speed are synchronous. Use this setting when there is little inertia and large resistance.
- In PG control mode, the AC motor drive executes the speed tracking function automatically according to the PG speed when this setting is NOT set to 0.
- This function is only valid when the RUN command is enabled.

07-07 Allowed Power Loss Duration

Default: 2.0

Settings 0.0–20.0 sec.

- Determines the maximum time of allowable power loss. If the duration of a power loss exceeds this parameter setting, the AC motor drive stops output after the power recovers.
- Pr.07-06 is valid when the maximum allowable power loss time is ≤ 20 seconds and the AC motor drive displays “Lv”. If the AC motor drive is powered off due to overload, even if the maximum allowable power loss time is ≤ 20 seconds, Pr.07-06 is invalid after the power recovers.

07-08 Base block Time

Default: Depending on the model power

Settings 0.0–5.0 sec.

- When momentary power loss is detected, the AC motor drive blocks its output and then waits for a specified period of time (determined by Pr.07-08, called Base Block Time) before resuming operation. Set this parameter to the time that allows the residual voltage at the output side to decrease to 0 V before activating the drive again.
- This parameter is not only for the B.B. time, but also is the re-start delay time after free run.
- The RUN command during a free run operation is memorized, and runs or stops with the last frequency command after the delay time.

- This delay time is only applicable in “Re-start after coast to stop” status, and does not limit ramp to stop. The coast to stop can be caused by various control command source, or by errors.
- Following table is the recommended setting for re-start delay time of each model power. You must set Pr.07-08 according to this table (the default of each model power is based on this table as well).

kW	0.75	1.5	2.2	3.7	5.6	7.5	11.0	15.0	18.5	22.0
HP	1	2	3	5	7.5	10	15	20	25	30
Delay time (sec.)	0.3	0.4	0.5	0.6	0.7	0.8	0.9	1.0	1.1	1.2

kW	30.0	37.0	45.0	55.0	75.0	90.0	110.0	132.0	160.0	185.0
HP	40	50	60	75	100	125	150	175	215	250
Delay time (sec.)	1.3	1.4	1.5	1.6	1.7	1.8	1.9	2.0	2.1	2.2

kW	200.0	220.0	250.0	280.0	315.0	355.0	400.0	450.0	500.0	560.0
HP	270	300	340	375	425	475	536	600	650	750
Delay time (sec.)	2.2	2.3	2.3	2.4	2.5	2.6	2.7	2.8	3.0	3.2

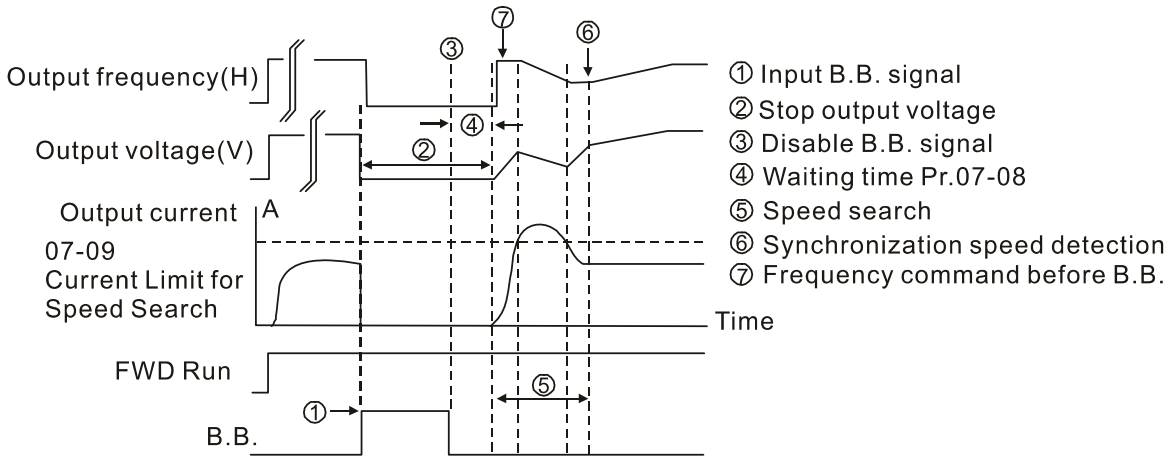

B.B. Search with last output frequency downward timing chart

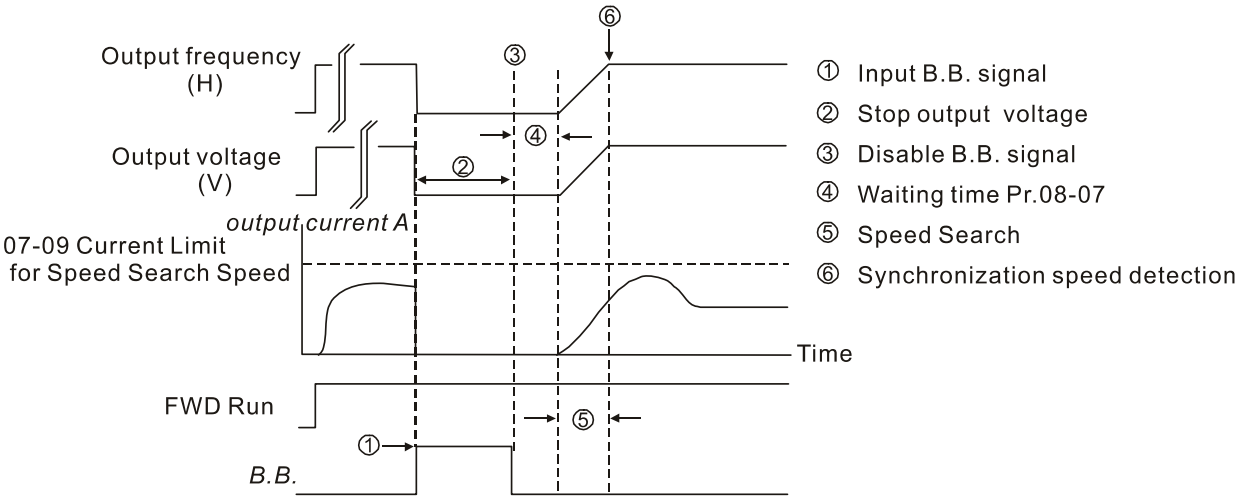

B.B. Search with minimum output frequency upward timing chart

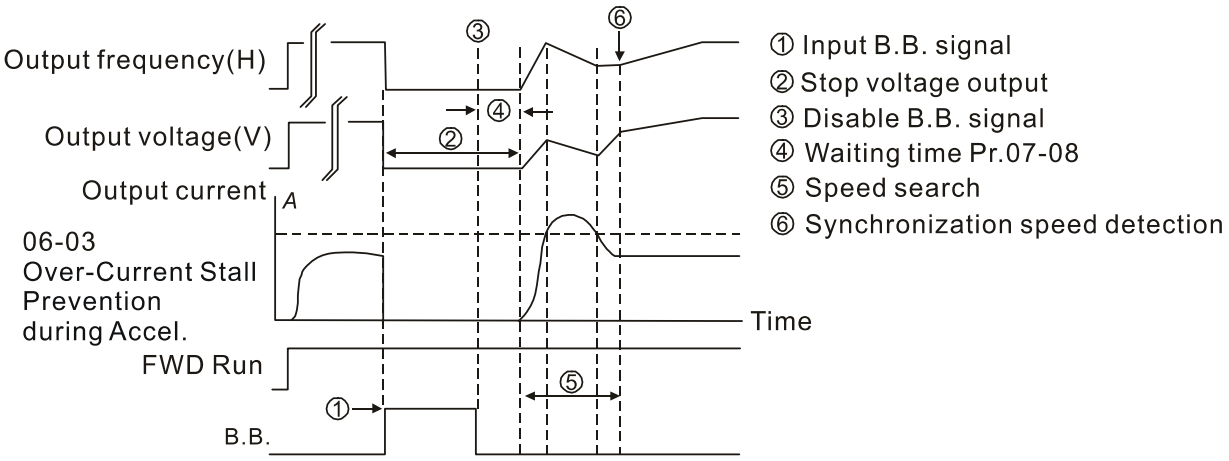

B.B. Search with minimum output frequency upward timing chart

07-09 Current Limit of Speed Tracking

Default: 100

Settings 20–200%

- 230V / 460V models: 100% corresponds to the heavy duty rated current of the drive, refer to Pr.00-01 for details.
- 575V / 690V models: 100% corresponds to the rated current of the drive (Pr.00-01).
- The AC motor drive executes speed tracking only when the output current is greater than the value set in Pr.07-09.
- The maximum current for speed tracking affects the synchronous time. The larger the parameter setting is, the faster the synchronization occurs. However, if the parameter setting is too large, the overload protection function may be activated.

07-10 Restart after Fault Action

Default: 0

Settings 0: Stop operation
1: Speed tracking by current speed
2: Speed tracking by minimum output frequency

- In PG control mode, the AC motor drive executes the speed tracking function automatically according to the PG speed when this setting is NOT set to 0.
- Faults include: bb, oc, ov and occ. To restart after oc, ov and occ, you can NOT set Pr.07-11 to 0.

07-11 Number of Times of Restart after Fault

Default: 0

Settings 0–10

- After fault (oc, ov and occ) occurs, the AC motor drive can reset and restart automatically up to 10 times. If Pr.07-11 is set to 0, the drive resets or restarts automatically after faults occur. The drive starts according to the Pr.07-10 setting after restarting after fault.
- If the number of faults exceeds the Pr.07-11 setting, the drive does not reset and restart until you press “RESET” manually and execute the operation command again.

07-12 Speed Tracking during Start-up

Default: 0

Settings 0: Disable
1: Speed tracking by the maximum output frequency
2: Speed tracking by the motor frequency at start-up
3: Speed tracking by the minimum output frequency

- When using SynRM, only Pr.07-12 = 3 (speed tracking by the minimum output frequency) is enabled.
- Speed tracking is suitable for punch, fans and other large inertia loads. For example, a mechanical punch usually has a large inertia flywheel, and the general stop method is coast to stop. If it needs to be restarted again, the flywheel may take 2–5 minutes or longer to stop. This parameter setting allows you to start the flywheel operating again without waiting until the flywheel stops completely. If you can use the speed feedback function (PG + Encoder), this speed tracking function will be faster and more accurate. Set Pr.07-09 as the tartget of the output current (the maximum current of speed tracking).
- In PG control mode, the AC motor drive executes the speed tracking function automatically according to the PG speed when this setting is NOT set to 0.
- When using PM, Pr.07-12 ≠ 0, the speed tracking function is enabled. When Pr.07-12 = 1, 2 or 3, the output frequency converts to the actual rotor speed from zero-speed.

07-13 dEb Function Selection

Default: 0

Settings 0: Disable
1: dEb with auto-acceleration / auto-deceleration, the drive does not output the frequency after the power is restored.
2: dEb with auto acceleration / auto-deceleration, the drive outputs the frequency after the power is restored.
3: dEb low-voltage control, then the drive's voltage increase to $350V_{DC}$ / $700V_{DC}$ and ramps to stop after low frequency
4: dEb high-voltage control of $350V_{DC}$ / $700V_{DC}$, and the drive ramps to stop

- dEb (Deceleration Energy Backup) lets the motor decelerate to stop when momentary power loss occurs. When the power loss is instantaneous, use this function to let the motor decelerate to zero speed. If the power recovers at this time, the drive restarts the motor after the dEb return time.
- Lv return level: Default value depends on the drive power model
  Models for frame A, B, C, D0, D = Pr.06-00 + 60V/30V (230V models)
  Models for frame E and above = Pr.06-00 + 80V/40V (230V models)
- Lv level: Default = Pr.06-00
- During dEb operation, other protection such as ryF, ov, oc, occ and EF may interrupt it, and these error codes are recorded.
- The STOP (RESET) command does not work during the dEb auto-deceleration, and the drive continues decelerating to stop. To make the drive coast to stop immediately, use another function (EF) instead.

- The B.B. function does not work when executing dEb. The B.B. function is enabled after the dEb function finishes.
- Even though the Lv warning does not display during dEb operation, if the DC bus voltage is lower than the Lv level, MOx = 10 (Low voltage warning) still operates.
- The following explains the dEb action:

  When the DC voltage drops below the dEb setting level, the dEb function starts to work (soft start relay remains closed), and the drive executes auto-deceleration.

  - Situation 1: Momentary power loss, or too low and unstable power voltage, or power supply sliding down because of sudden heavy load.

    Pr.07-13=1, “dEb active, DC bus voltage returns, output frequency does not return” and power recovers.

    When the power recovers and DC bus voltage exceeds the dEb return level, the drive linearly decelerates to 0 Hz and stops. The keypad displays the ”dEb” warning until you manually reset it, so you can see the reason for the stop.

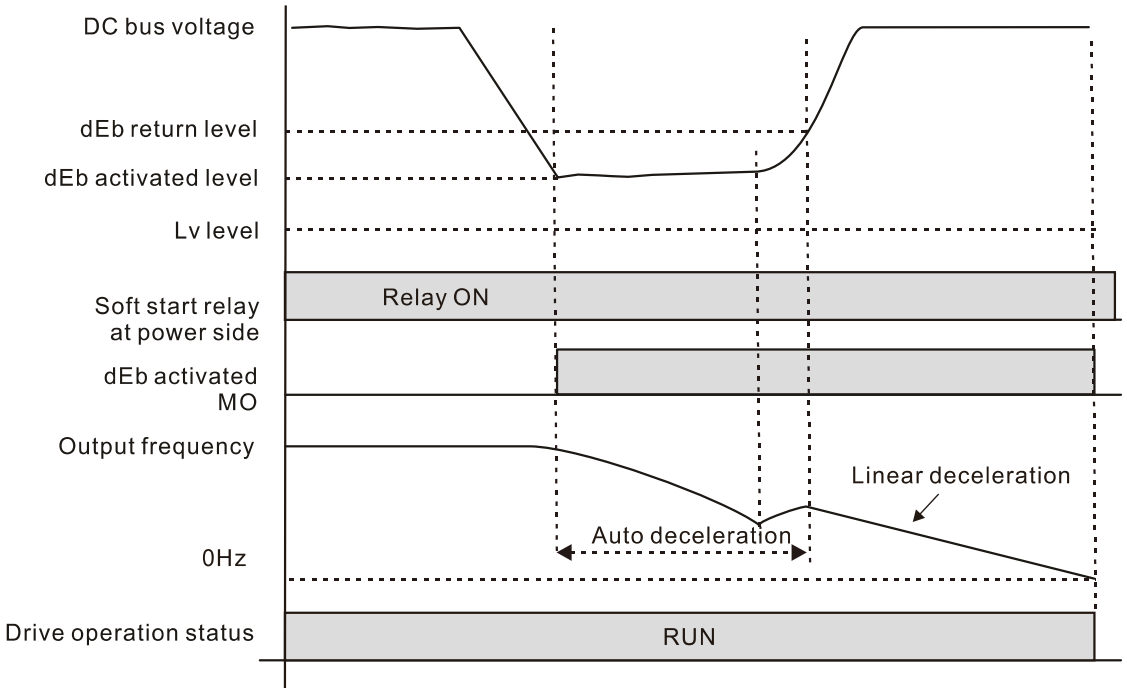

  - Situation 2: Momentary power loss, or too low and unstable power voltage, or power supply sliding down because of sudden heavy load.

    Pr.07-13=2 “dEb active, DC bus voltage returns, output frequency returns” and power recovers.

    During the dEb deceleration (includes 0 Hz run), if the power recovers to a voltage higher than dEb return level, the drive maintains the frequency for the set time of Pr.07-14 (default = 3 sec.) and then accelerates again. The “dEb” warning on the keypad is automatically cleared.

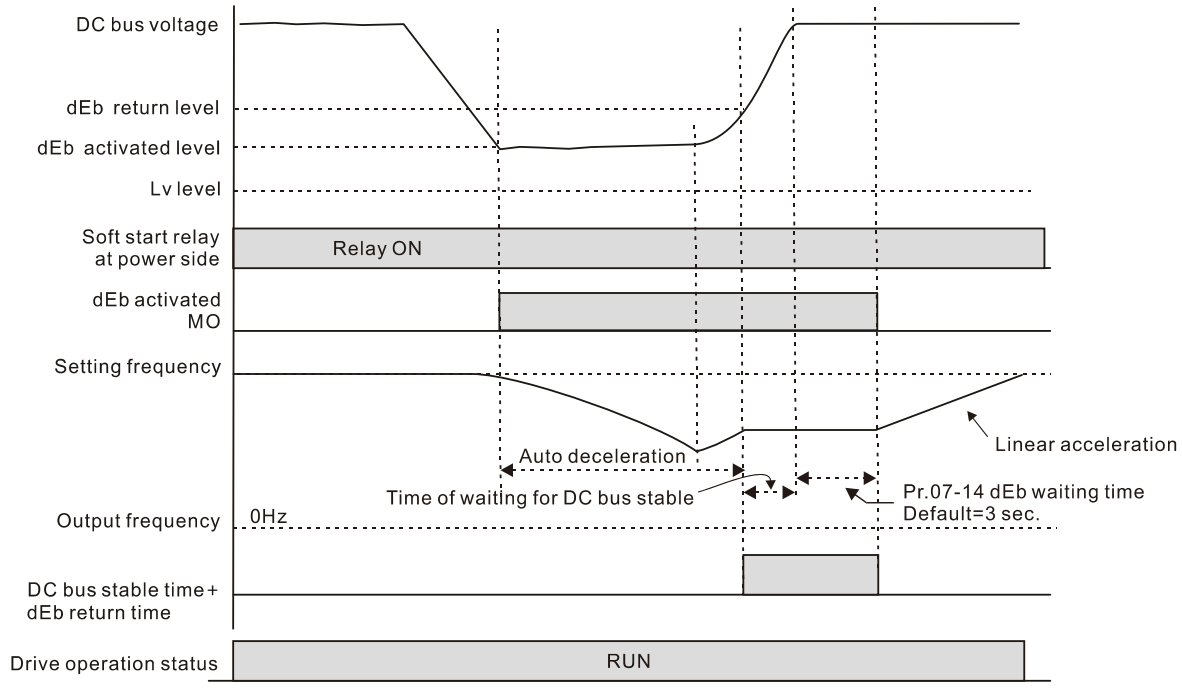

- Situation 3: Unexpected power shut down or power loss

  Pr.07-13=1 “dEb active, DC bus voltage returns, the output frequency does not return” and the power does not recover.

  The keypad displays the “dEb” warning and the drive stops after decelerating to the lowest operating frequency. When the DC bus voltage is lower than the Lv level, the drive disconnects the soft start relay until the power completely runs out.

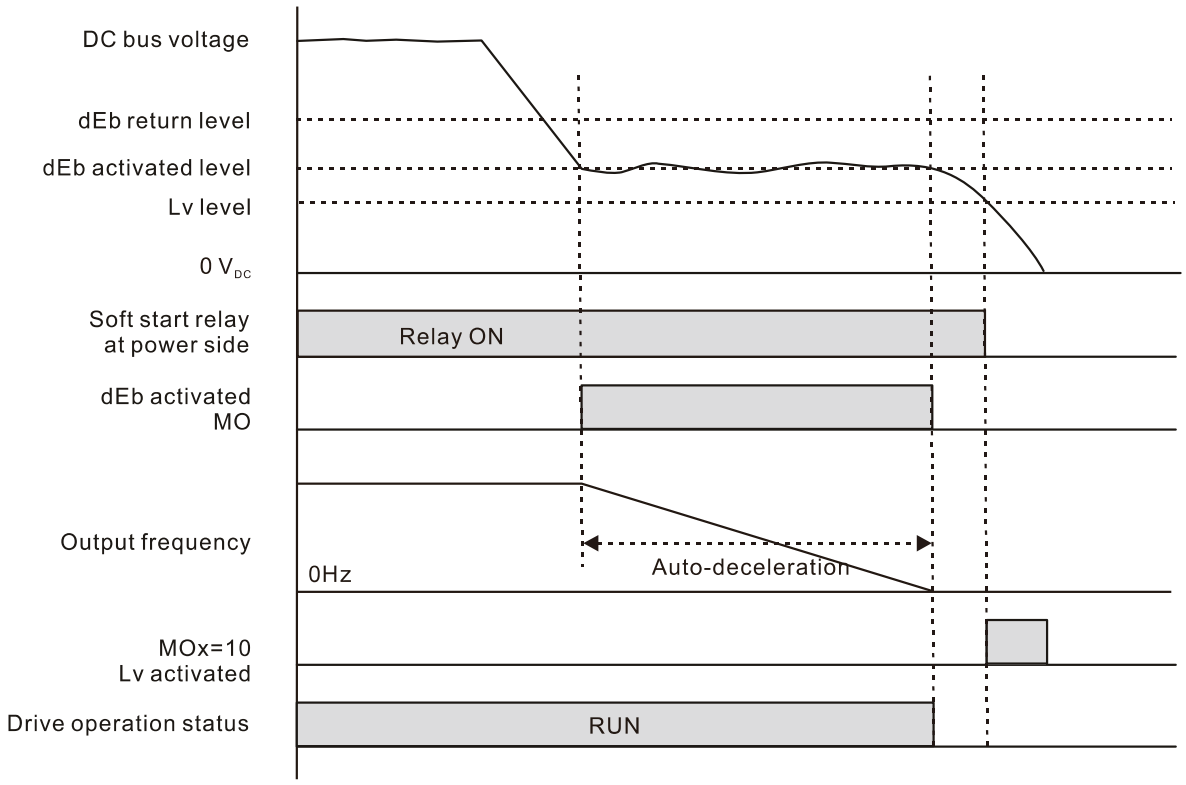

- Situation 4:

  Pr.07-13=2 “dEb active, DC bus voltage returns, the output frequency returns” and power does not recover.

  The drive decelerates to 0 Hz. The DC bus voltage continues to decrease until the voltage is lower than the Lv level, and then the drive disconnects the soft start relay. The keypad displays “dEb” warning until the drive completely runs out of power.

- Situation 5:

  Pr.07-13=2 “dEb low voltage control, when the speed is lower than 1/4 rated motor speed, DC bus voltage rises to $350V_{DC}$ / $700V_{DC}$, the drive ramps to stop.

  The drive decelerates to 0 Hz. The DC bus voltage continues to decrease until the voltage is lower than the Lv level, and then the drive disconnects the soft start relay. The soft start relay closes again after the power recovers and the DC bus voltage is higher than the Lv return level. When the DC bus voltage is higher than the dEb return level, the drive maintains the frequency for the set time of Pr.07-14 (default = 3 sec.) and starts to accelerate linearly, and the dEb warning on the keypad is automatically cleared.

- Situation 6:

  Pr.07-13=4, dEb high-voltage control

  When dEb occurs, the DC bus voltage control level rises to $350V_{DC}$ / $700V_{DC}$ to ramp to stop. Even though the power recovers and the frequency does not return, dEb activates until the motor decelerates to 0Hz.

  (1) When dEb activates, it sends dEb warning. When the output frequency reaches 0Hz, the operation status is STOP and disables the dEb function, the dEb warning continues.

  (2) If power does not recover, the DC bus voltage drops until reaches the Lv level, the drive LvS error occurs (keypad displays LvS error that covers the dEb display), the Soft Start Relay will be OFF.

07-14 dEb Function Reset Time

Default: 3.0

Settings 0.0–25.0 sec.

dEb (Deceleration Energy Backup) lets the motor decelerate to stop when momentary power loss occurs. When the power loss is instantaneous, use this function to let the motor decelerate to zero speed.

07-15 Dwell Time at Acceleration

Default: 0.00

Settings 0.00–600.00 sec.

07-17 Dwell Time at Deceleration

Default: 0.00

Settings 0.00–600.00 sec .

07-16 Dwell Frequency at Acceleration

Default: 0.00

Settings 0.00–599.00 Hz

07-18 Dwell Frequency at Deceleration

Default: 0.00

Settings 0.00–599.00 Hz

- In the heavy load situation, Dwell can make stable output frequency temporarily, such as crane or elevator.
- For heavy load applications, use Pr.07-15–Pr.07-18 to avoid ov or oc protection.

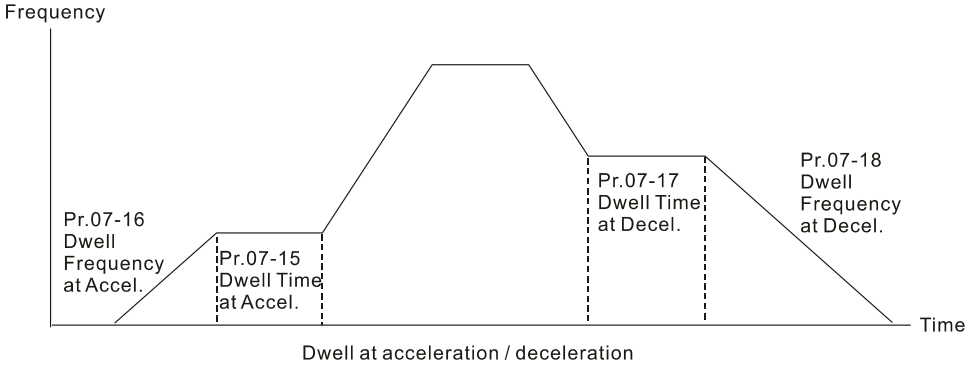

07-19 Fan Cooling Control

Default: 0

Settings 0: Fan is always ON
1: Fan is OFF after AC motor drive stops for one minute
2: Fan is ON when the AC motor drive runs; fan is OFF when the AC motor drive stops
3: Fan turns ON when temperature (IGBT) reaches around 60°C
4: Fan is always OFF

- Use this parameter to control the fan.
- 0: Fan runs immediately when the drive power is turned ON.
- 1: Fan runs when the AC motor drive runs. One minute after the AC motor drive stops, the fan is OFF.
- 2: Fan runs when the AC motor drive runs and stops immediately when AC motor drive stops.
- 3: Fan is ON when IGBT or capacitance temperature is > 60°C
  Fan is OFF when IGBT and capacitance temperature are both < 40°C, and the drive stops running
- 4: Fan is always OFF
- The control parameters for the applicable fan of each frame are as below:

Frame	Heat Sink Fan	Capacitor Fan
A	Pr.07-19	No capacitor fan
B	Pr.07-19	Pr.07-19
C	Pr.07-19	Pr.07-19 230V models: always ON
D0	Pr.07-19	Pr.07-19
D	Pr.07-19	ON
E	Pr.07-19	Pr.07-19
F	Pr.07-19	Pr.07-19
G	Pr.07-19	No capacitor fan
H	Pr.07-19	No capacitor fan

07-20 Emergency Stop (EF) & Force to Stop Selection

Default: 0

Settings 0: Coast to stop
1: Stop by the first deceleration time
2: Stop by the second deceleration time
3: Stop by the third deceleration time
4: Stop by the fourth deceleration time
5: System deceleration
6: Automatic deceleration

When the multi-function input terminal setting is set to 10 (EF input) or 18 (force to stop) and the terminal contact is ON, the drive stops according to the setting of this parameter.

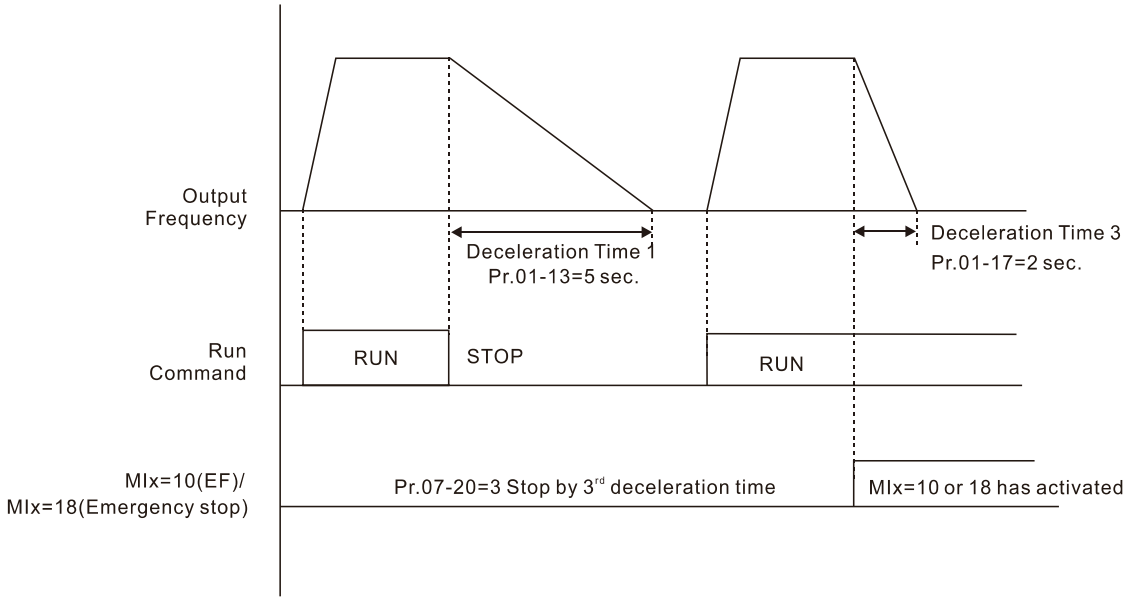

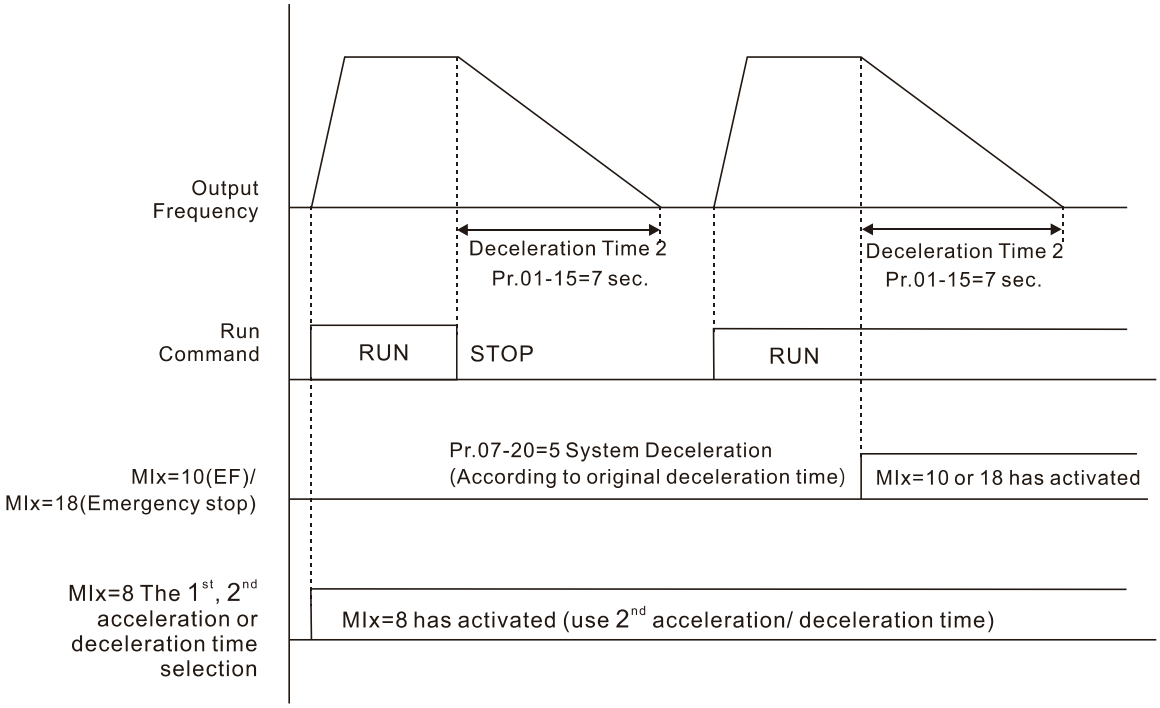

07-21 Automatic Energy-saving (AES) Selection

Default: 0

Settings 0: Disabled

1: Power factor energy-saving improvement (for VF, SVC, VFPG control modes)

2: Automatic energy-saving optimization (for VF, SVC, VFPG control modes)

Different control modes for Pr.07-21:

Motor	Induction Motor (IM)					Permanent Magnet Synchronous Motor (PM)				Synchronous Reluctance Motor (SynRM)
Control Mode	VF	VFPG	SVC	FOCPG	FOC	PM SVC	FOCPG PM	PM FOC	HFI	
1: Power factor energy-saving improvement	✓	✓	✓							
2: Automatic energy-saving optimization	✓	✓	✓							

Power factor energy-saving improvement (Pr.07-21=1):

- When the automatic energy-saving function is enabled, the drive runs with full-voltage during acceleration and deceleration, and runs with the optimal voltage that is automatically calculated by the load power during constant operation. It is not recommended to use this function for applications that require frequent load changes or when the load is close to full-load during operation.
- The prerequisites for valid power factor energy-saving improvement (Pr.07-21=1) are:
  - A. Power factor angle is larger than Pr.07-43 (Targeted Power Factor Angle for AES)
  - B. Output frequency is larger than Pr.07-41 (Minimum Frequency for AES)
  - C. The drive is in a steady-state output frequency status
  - D. Time for steady-state output frequency is larger than Pr.07-42 (Delay Time for AES)
  - E. Output current is smaller than or equal to 90% of the drive's rated current
- The prerequisites for invalid power factor energy-saving improvement (Pr.07-21=1) are:
  1. A changing output frequency
  2. Output current is larger than 90% of the drive's rated current

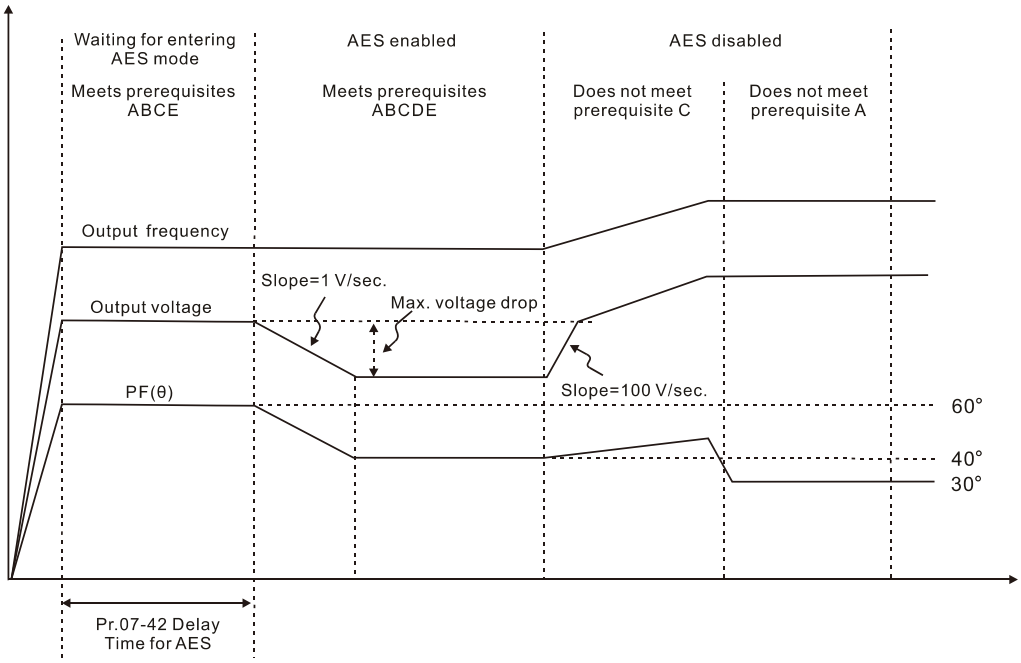

Automatic energy-saving optimization (Pr.07-21=2):

- Controls the output voltage to minimize the motor's losses for optimal energy-saving. The motor's losses are calculated by motor parameter auto-tuning and energy-saving coefficient.
- Automatic energy-saving optimization control is according to the block diagram below:

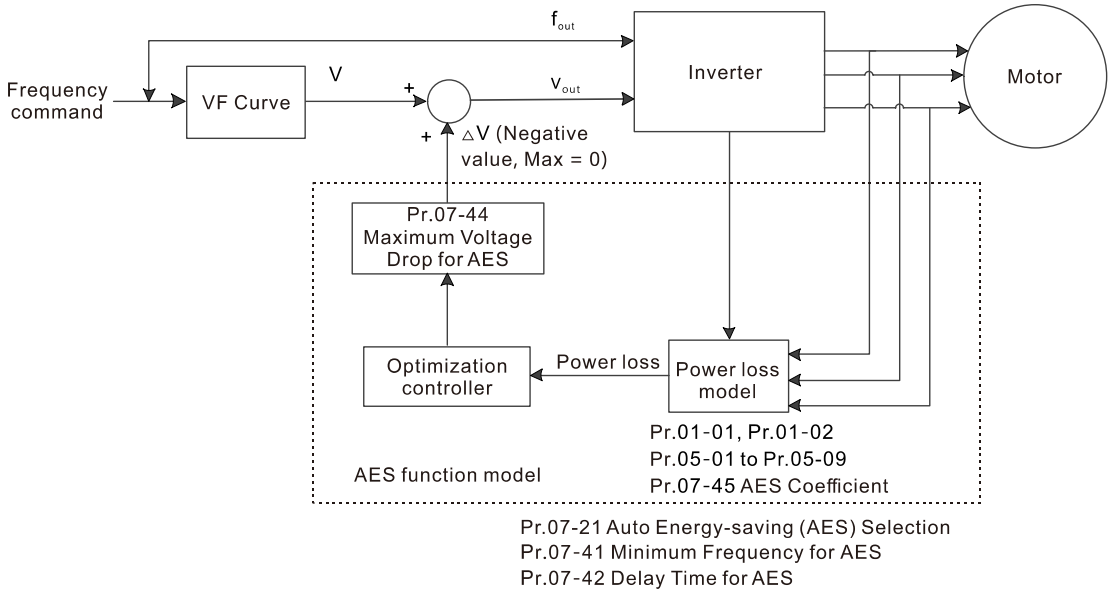

- The prerequisites for valid automatic energy-saving optimization (Pr.07-21=2) are:
  A. Output frequency is larger than Pr.07-41 (Minimum Frequency for AES)
  B. The drive is in a steady-state output frequency status
  C. Time for steady-state output frequency is larger than Pr.07-42 (Delay Time for AES)
- The prerequisites for invalid automatic energy-saving optimization (Pr.07-21=2) are:
  1. A changing output frequency
  2. The loss model automatically determines the voltage drops when the drive is in normal and heavy duty. If there is no more voltage that can be adjusted, that is, the voltage drop is already optimized, AES is invalid.

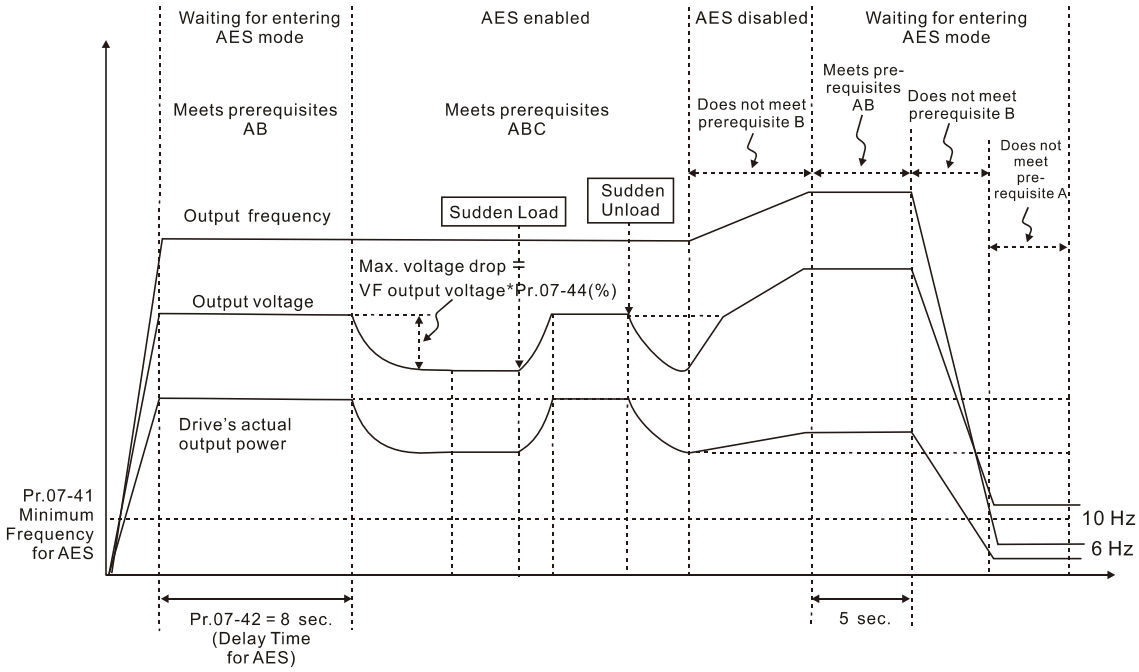

The energy-saving function is invalid during the drive's acceleration and deceleration. To make it valid, the prerequisites need to be verified again.

07-22 Energy-saving Gain

Default: 100

Settings 10–1000%

- When Pr.07-21 is set to 1, use this parameter to adjust the energy-saving gain. The default is 100%. If the result is not satisfactory, adjust it by decreasing the setting value. If the motor oscillates, then increase the setting value.
- In certain applications such as high speed spindles, the temperature rise in the motor is a major concern. When the motor is not in working state, reduce the motor current to a lower level. Reduce this parameter setting to meet this requirement.

07-23 Automatic Voltage Regulation (AVR) Function

Default: 0

Settings 0: Enable AVR
1: Disable AVR
2: Disable AVR during deceleration

- The rated voltage of the motor is usually 200–240 V_{AC} (380–480 V_{AC}), 60 Hz / 50 Hz and the input voltage of the AC motor drive may vary between 170–264 V_{AC} (323–528 V_{AC}), 50 Hz / 60 Hz. Therefore, when the AC motor drive is used without the AVR function, the output voltage is the same as the input voltage. When the motor runs at the voltage exceeding 12–20% of the rated voltage, it causes higher temperature, damaged insulation, and unstable torque output, which result in losses due to shorter motor lifetime.
- The AVR function automatically regulates the output voltage of the AC motor drive to the motor's rated voltage when the input voltage exceeds the motor's rated voltage. For example, if the V/F curve is set at 200 V_{AC} / 50 Hz and the input voltage is at 200–264 V_{AC}, then the drive automatically reduces the output voltage to the motor to a maximum of 200 V_{AC} / 50 Hz. If the input voltage is at 170–200 V_{AC}, the output voltage to motor is in direct proportion to the input voltage.
- 0: When the AVR function is enabled, the drive calculates the output voltage according to the actual DC bus voltage. The output voltage does NOT change when the DC bus voltage changes.
- 1: When the AVR function is disabled, the drive calculates the output voltage according to the actual DC bus voltage. The output voltage changes with the DC bus voltage, and may cause insufficient current, over-current or oscillation.
- 2: The drive disables the AVR function only during deceleration to stop, and at this time, you can accelerate the braking to achieve the same result .
- When the motor ramps to stop, disable the AVR function to shorten the deceleration time. Then, use with the auto-acceleration and auto-deceleration functions to make the motor's deceleration more stable and quicker.
- When the control mode is set as FOCPG or TQCPG, it is recommended to set this parameter to 0 (enable AVR).

07-24 Torque Command Filter Time (V/F and SVC Control Mode)

Default: 0.500

Settings 0.001–10.000 sec.

- When the time constant setting is too large, the control is stable but the control response is slow. When the time constant setting is too small, the control response is faster but the control may be unstable. For optimal setting, adjust the setting based on the control stability or the control response.

07-25 Slip Compensation Filter Time (V/F and SVC Control Mode)

Default: 0.100

Settings 0.001–10.000 sec.

- Change the compensation response time with Pr.07-24 and Pr.07-25.
- If you set Pr.07-24 and Pr.07-25 to 10 seconds, the compensation response time is the slowest; however, the system may be unstable if you set the time too short.

07-26 Torque Compensation Gain

Default: 0

Settings IM: 0–10 (when Pr.05-33 = 0)
PM: 0–5000 (when Pr.05-33 = 1 or 2)

- Only applicable in IMVF and PMSVC control modes.
- With a large motor load, a part of the drive output voltage is absorbed by the stator winding resistor; therefore, the air gap magnetic field is insufficient. This causes insufficient voltage at motor induction and results in excessive output current but insufficient output torque. Auto-torque compensation can automatically adjust the output voltage according to the load and keep the air gap magnetic fields stable to get the optimal operation
- In the V/F control, the voltage decreases in direct proportion with decreasing frequency. The torque decreases at low speed because of a decreasing AC impedance and an unchanged DC resistance. The auto-torque compensation function increases the output voltage at low frequency to get a higher starting torque.
- When the compensation gain is set too large, it may cause motor over-flux and result in a too large output current of the drive, motor overheating or trigger the drive's protection function.
- This parameter affects the output current when the drive runs. But the effect is smaller at the low-speed area.
- Set this parameter higher when the no-load current is too large, but the motor may vibrate if the setting is too high. If the motor vibrates when operating, reduce the setting.

07-27 Slip Compensation Gain

Default: 0.00
(1.00 in SVC mode)

Settings 0.00–10.00

- Only applicable in IMVF and IMSVC control modes.
- The induction motor needs constant slip to produce electromagnetic torque. It can be ignored at higher motor speeds, such as rated speed or 2–3% of slip.

- However, during the drive operation, the slip and the synchronous frequency are in reverse proportion to produce the same electromagnetic torque. The slip is larger with the reduction of synchronous frequency. Moreover, the motor may stop when the synchronous frequency decreases to a specific value. Therefore, the slip seriously affects the motor speed accuracy at low speed.
- In another situation, when you use an induction motor with the drive, the slip increases when the load increases. It also affects the motor speed accuracy.
- Use this parameter to set the compensation frequency, and reduce the slip to maintain the synchronous speed when the motor runs at the rated current in order to improve the accuracy of the drive. When the drive output current is higher than Pr.05-05 (No-load Current for Induction Motor 1 (A)), the drive compensates the frequency according to this parameter.
- This parameter is set to 1.00 automatically when Pr.00-11 (Speed Control Mode) is changed from V/F mode to vector mode. Otherwise, it is automatically set to 0.00. Apply the slip compensation after load and acceleration. Increase the compensation value from small to large gradually; add the output frequency to the [motor rated slip × Pr.07-27 (Slip Compensation Gain)] when the motor is at the rated load. If the actual speed ratio is slower than expected, increase the parameter setting value; otherwise, decrease the setting value.

07-29 Slip Deviation Level

Default: 0

Settings 0.0–100.0%
0: No detection

07-30 Over-slip Deviation Detection Time

Default: 1.0

Settings 0.0–10.0 sec.

07-31 Over-slip Deviation Treatment

Default: 0

Settings 0: Warn and continue operation
1: Fault and ramp to stop
2: Fault and coast to stop
3: No warning

- Pr.07-29 to Pr.07-31 set the allowable slip level / time and the over-slip treatment when the drive is running.

07-32 Motor Oscillation Compensation Factor

Default: 1000

Settings 0–10000
0: Disable

- If there are current wave motions which cause severe motor oscillation in some specific area, setting this parameter can effectively improve this situation. (When running with high frequency or PG, set this parameter to 0. When the current wave motion occurs in low frequency and high power, increase the value for Pr.07-32.)

07-33 Auto-restart Interval of Fault

Default: 60.0

Settings 0.0–6000.0 sec.

When a reset / restart occurs after a fault, the drive uses Pr.07-33 as a timer and starts counting the numbers of faults within this time period. Within this period, if the number of faults does not exceed the setting for Pr.07-11, the counting clears and starts from 0 when the next fault occurs.

07-38 PMSVC Voltage Feed Forward Gain

Default: 1.00

Settings 0.00–2.00

Adjusts the PMSVC voltage feedback forward gain, and to meet the demand of rapid feedback application.

Pr.07-38 = 1.00 means forward feedback = Ke × motor rotor speed

Refer to Section 12-2 “PMSVC adjustment” for details.

07-41 Minimum Frequency for AES

Default: 10.00

Settings 0.00–40.00 Hz

The drive’s output frequency must be larger than Pr.07-41 to make the drive determine whether to run in a steady-state output frequency.

In general, larger power and voltage can give more energy-savings; lower power and voltage produce less energy-savings. However, too low power and voltage are not suitable for low-speed operation because it needs a larger starting current. Pr.07-41 is the parameter that limits the minimum frequency when AES is enabled (Pr.07-41 to Pr.01-00 is the frequency range – from minimum to maximum – that you can use for the AES function).

07-42 Delay Time for AES

Default: 5

Settings 0–600 sec.

When the drive runs in a steady-state output frequency, and exceeds Pr.07-42 setting time, the drive enters the energy-saving mode.

07-43 Targeted Power Factor Angle for AES

Default: 40.00

Settings 0.00–65.00°

Use this function when Pr.07-21 = 1. If the power factor angle is larger than Pr.07-43, the drive continuously adjusts the energy-saving until it is smaller than Pr.07-43.

Pr.07-43 is the angle θ between active power and reactive power. The smaller COSθ, the lower the reactive power, and the lower the loss.

07-44 Maximum Voltage Drop for AES

Default: 60.00

Settings 0.00–70.00%

- Defines the maximum allowed voltage drop when the drive is in energy-saving mode.
- The drive has bigger energy-saving efficiency when running in no-load or light-load. But the output voltage drop is not unlimited. Use Pr.07-44 to limit the maximum ratio (%) of the output voltage drop.

  Example:

  (1) If Pr.01-01 = 60 Hz, Pr.01-02 = 380 V_{AC}, the frequency command is 60Hz and the actual voltage output is 371.2 V_{AC}, and Pr.07-44 = 60%, then the maximum voltage drop = 380V (the voltage command corresponding to the frequency command in the VF table: 60 Hz corresponds to 380V) × 60% = 228 V_{AC}.

  (2) If the frequency command is 30 Hz, the corresponding voltage is 200 V_{AC} in the VF table, and Pr.07-44 = 60%, then the maximum voltage drop = 200V × 60% = 120 V_{AC}.

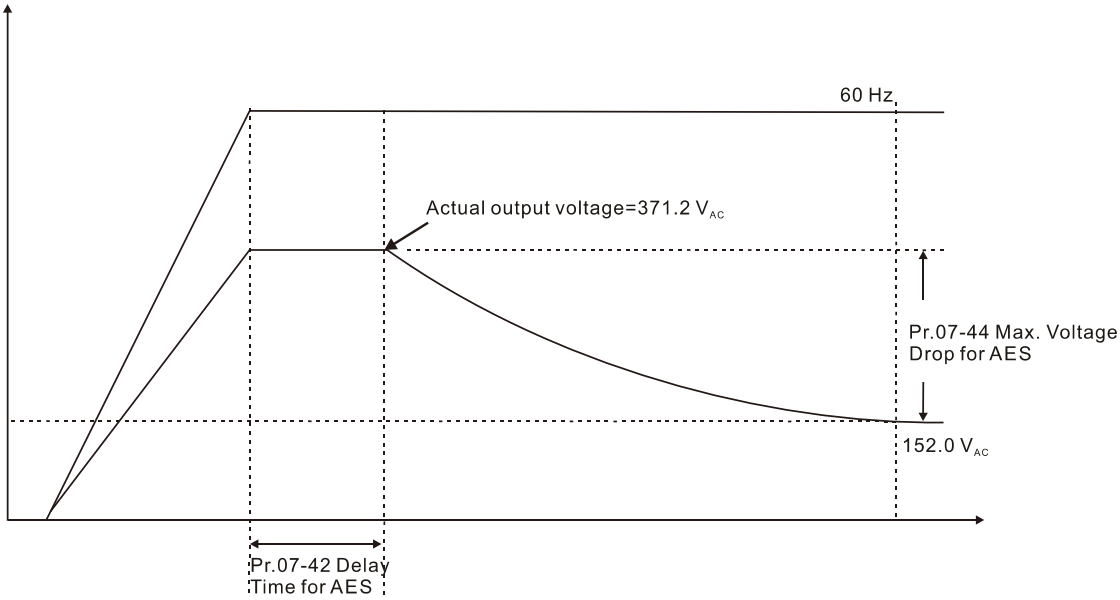

07-45 AES Coefficient

Default: 100

Settings 0–10000%

- Defines the motor power loss constant. Default 100% corresponds to the drive's iron loss constant that is calculated by motor parameter auto-tuning or motor nameplate information.
- Pr.07-45 affects the final steady-state output voltage value for the energy-saving control. The larger the Pr.07-45 setting value, the higher the steady-state output voltage (smaller voltage drop). The smaller the Pr.07-45 setting value, the lower the steady-state output voltage (larger voltage drop).
- See below for the flowchart of AES adjustment with motor parameter auto-tuning (recommended):

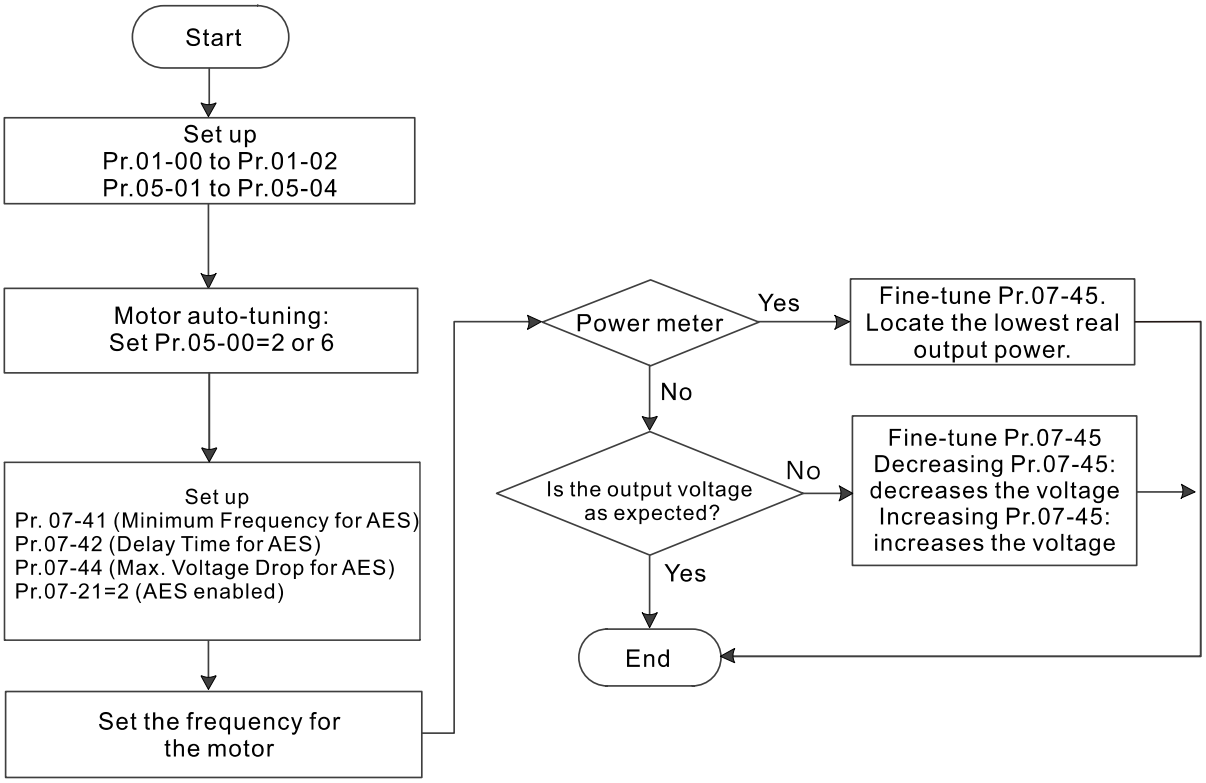

See below for the flowchart of AES adjustment without motor parameter auto-tuning (not recommended):

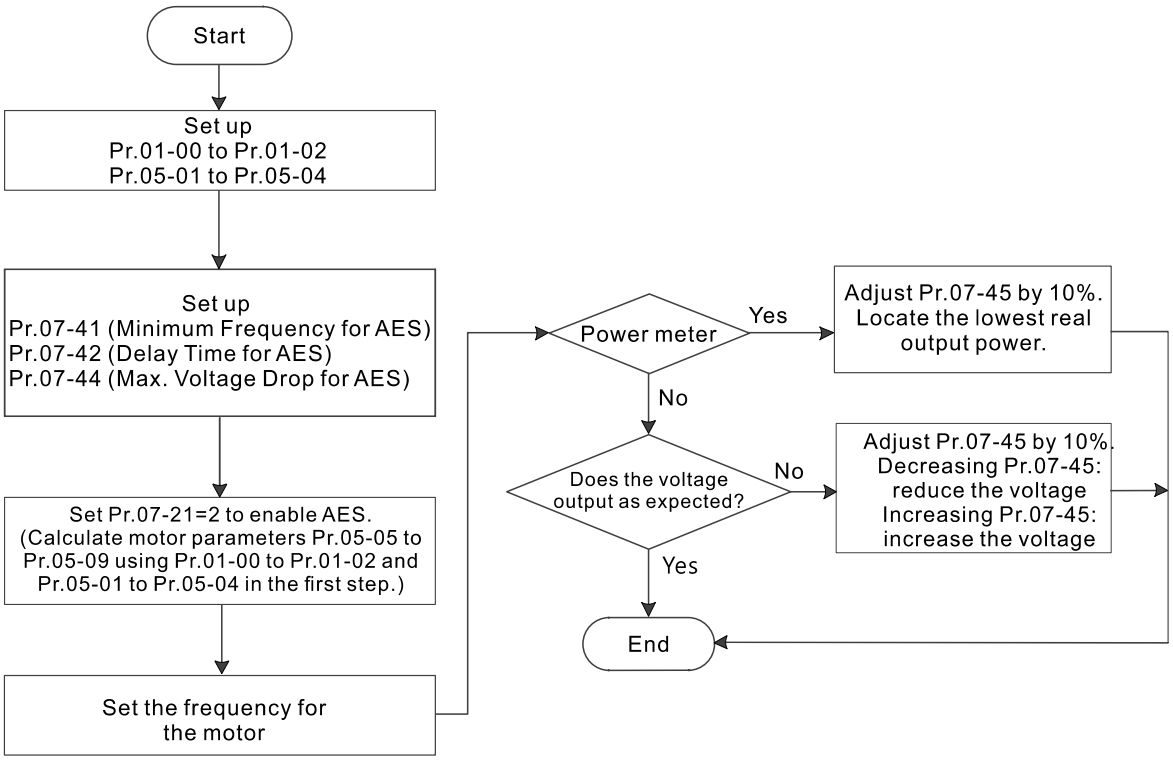

07-62 dEb Gain (Kp)

Default: 8000

Settings 0–65535

07-63 dEb Gain (Ki)

Default: 150

Settings 0–65535

- Sets the PI gain of DC bus voltage controller when the dEb function activates.
- If the DC bus voltage drops too fast, or the speed oscillation occurs during deceleration after the dEb function activates, adjust Pr.07-62 and Pr.07-63. Increase the Kp setting to quicken the control response, but the oscillation may occur if the setting is too large. Use Ki parameter to decrease the steady-state error to zero, and increase the setting to quicken the response speed.

08 High-function PID Parameters

✓ You can set this parameter during operation.

✓ 08-00 Terminal Selection of PID Feedback

Default:0

Settings
0: No function
1: Negative PID feedback: by analog input (Pr.03-00–03-02)
2: Negative PID feedback: by PG card pulse input, without direction (Pr.10-02)
3: Negative PID feedback: by PG card pulse input, with direction (Pr.10-02)
4: Positive PID feedback: by analog input (Pr.03-00–03-02)
5: Positive PID feedback: by PG card pulse input, without direction (Pr.10-02)
6: Positive PID feedback: by PG card pulse input, with direction (Pr.10-02)
7: Negative PID feedback: by communication protocol
8: Positive PID feedback: by communication protocol

📖 Pr.08-00 ≠ 0 enables the PID function.

📖 Negative feedback:
Error = + Target value (set point) – Feedback. Use negative feedback when the detection value increases if the output frequency increases.

📖 Positive feedback:
Error = - Target value (set point)+ Feedback. Use positive feedback when the detection value decreases if the output frequency increases.

📖 When Pr.08-00 ≠ 7 or ≠ 8, the input value is disabled. The setting value does not remain when the drive is powered off.

📖 When Pr.08-00 ≠ 0, the related applicable parameters include:

- Pr.00-20 (Master frequency command source (AUTO) / Source selection of the PID target)
- Pr.03-00–03-02:
  When Pr.00-20 = 2 (External analog input), set Pr.03-00–03-02 =4 (PID target value)
  When Pr.08-00 = 1 or 4, set Pr.03-00–03-02 = 5 (PID feedback signal)

Refer to the following description for details.

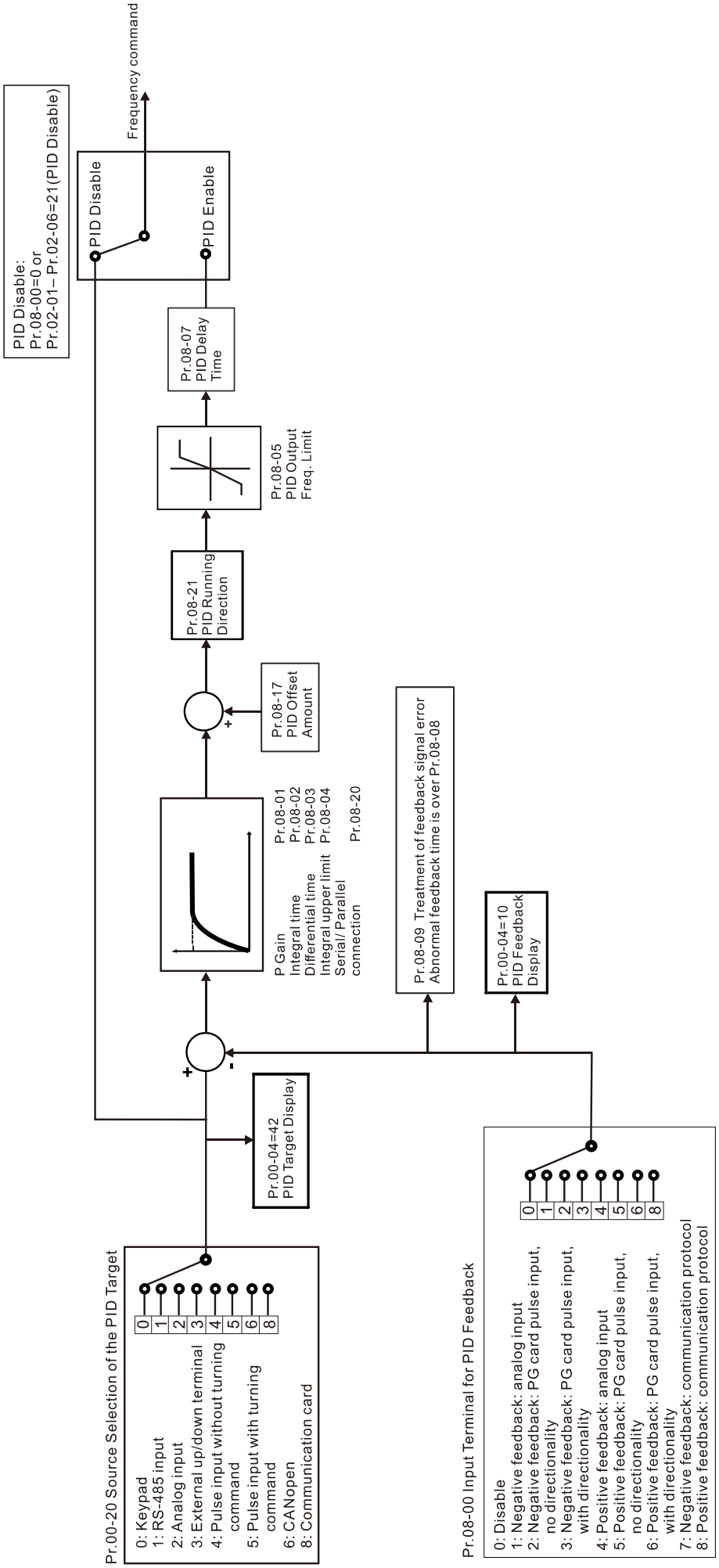
PID Disable:
Pr.08-00=0 or
Pr.02-01 – Pr.02-06=21(PID Disable)
PID Disable
PID Enable
Frequency command
Pr.08-07
PID Delay
Time
Pr.08-05
PID Output
Freq. Limit
Pr.08-21
PID Running
Direction
Pr.08-17
PID Offset
Amount
P Gain
Integral time
Differential time
Integral upper limit
Serial/ Parallel
connection
Pr.08-01
Pr.08-02
Pr.08-03
Pr.08-04
Pr.08-20
Pr.08-09 Treatment of feedback signal error
Abnormal feedback time is over Pr.08-08
Pr.00-04=10
PID Feedback
Display
Pr.00-04=42
PID Target Display
Pr.00-20 Source Selection of the PID Target
0: Keypad
1: RS-485 input
2: Analog input
3: External up/down terminal
4: Pulse input without turning command
5: Pulse input with turning command
6: CANopen
8: Communication card
Pr.08-00 Input Terminal for PID Feedback
0: Disable
1: Negative feedback: analog input
2: Negative feedback: PG card pulse input, no directionality
3: Negative feedback: PG card pulse input, with directionality
4: Positive feedback: analog input
5: Positive feedback: PG card pulse input, no directionality
6: Positive feedback: PG card pulse input, with directionality
7: Negative feedback: communication protocol
8: Positive feedback: communication protocol

00-20 Master Frequency Command Source (AUTO) / Source Selection of the PID Target

Default: 0

Settings
0: Digital keypad
1: RS-485 communication input
2: External analog input (Refer to Pr.03-00–03-02)
3: External UP / DOWN terminal (multi-function input terminals)
4: Pulse input without direction command (Pr.10-16 without considering direction), use with PG card
5: Pulse input with direction command (refer to Pr.10-16), use with PG card
6: CANopen communication card
8: Communication card (does not include CANopen card)

03-00 AVI Analog Input Selection
03-01 ACI Analog Input Selection
03-02 AUI Analog Input Selection

Default: 0

Settings
4: PID target value
5: PID feedback signal

Common applications for PID control:

- Flow control: Use a flow sensor to feedback the flow data and perform accurate flow control.
- Pressure control: Use a pressure sensor to feedback the pressure data and perform precise pressure control.
- Air volume control: Use an air volume sensor to feedback the air volume data to achieve excellent air volume regulation.
- Temperature control: Use a thermocouple or thermistor to feedback temperature data for comfortable temperature control.
- Speed control: Use a speed sensor–to feedback motor shaft speed or input another machine speed as a target value for synchronous control.

PID control loop:

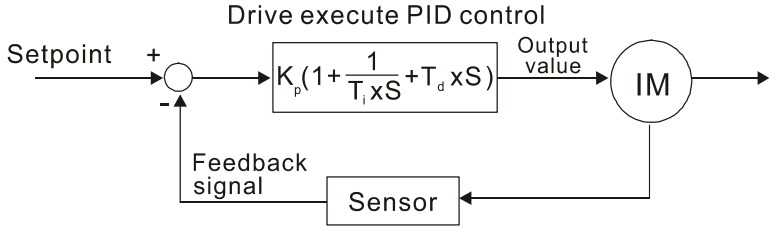

K_P Proportional Gain (P), T_i Integral Time (I), T_d Differential Time (D), S Calculation

Concept of PID control

📖 Proportional gain (P):

The output is proportional to input. With only proportional gain control, there is always a steady-state error.

Adjustment: Turn off the Ti and Td, or remain Ti and Td in constant value, then adjust the proportional gain (P).

Increase: Faster status feedback, but excessive adjustment increases the overshoot.

Decrease: Smaller overshoot, but excessive adjustment slows down the transient response.

📖 Integral time (I):

The controller output is proportional to the integral of the controller input. When an automatic control system is in a steady state and a steady-state error occurs, the system is called a System with Steady-state Error To eliminate the steady-state error, add an “integral part” to the controller. The integral time controls the relation between integral part and the error. The integral part increases over time even if the error is small. It gradually increases the controller output to eliminate the error until it is zero. This stabilizes the system without a steady-state error by using proportional gain control and integral time control.

Adjustment: The integral time (I) accumulates from the time difference, if the vibration cycle is longer than the setting for integral time, the integration enhances. Increase the integral time (I) to reduce the vibration.

Increase: Reduce the overshoot, excessive adjustment causes worse transient response.

Decrease: Faster transient response, but the transient time will be longer, and takes more time to achieve the steady state. Excessive adjustment causes larger overshoot.

📖 Differential control (D):

The controller output is proportional to the differential of the controller input. During elimination of the error, oscillation or instability may occur. Use the differential control to suppress these effects by acting before the error. That is, when the error is near zero, the differential control should be zero. Use proportional gain (P) and differential control (D) to improve the system state during PID adjustment.

Adjustment: When the vibration cycle is shorter and continuous, it means that the differential time setting is too large, and causes excessive output. Decrease the setting of D gain to reduce the vibration. If the D gain is set to 0, adjust the PID control again.

Using PID control in a constant pressure pump feedback application:

Set the application's constant pressure value (bar) to be the set point of PID control. The pressure sensor sends the actual value as the PID feedback value. After comparing the PID set point and PID feedback, an error displays. The PID controller calculates the output by using proportional gain (P), integral time (I) and differential time (D) to control the pump. It controls the drive to use a different pump speed and achieves constant pressure control by using a 4–20 mA signal corresponding to 0–10 bar as feedback to the drive.

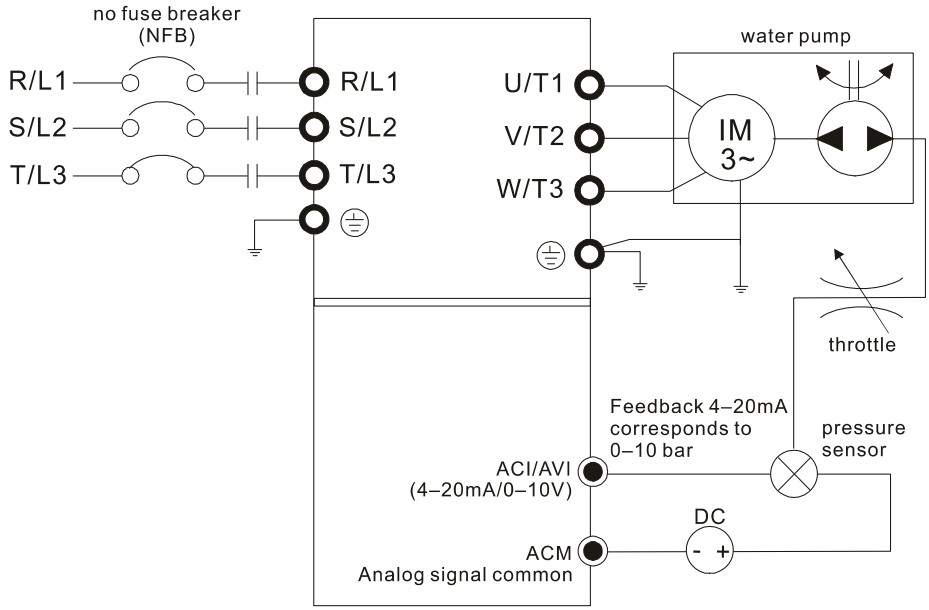

- Pr.00-04 = 10 (Display PID feedback (b) (%)).
- Pr.01-12 Acceleration Time is set according to actual conditions.
- Pr.01-13 Deceleration Time is set according to actual conditions.
- Pr.00-21 = 0, operate through the digital keypad.
- Pr.00-20 = 0, the digital keypad controls the set point.
- Pr.08-00 = 1 (Negative PID feedback from analog input)
- ACI analog input Pr.03-01 = 5, PID feedback signal.
- Pr.08-01–08-03 is set according to actual conditions:

  If there is no oscillation in the system, increase Pr.08-01 (Proportional Gain (P))

  If there is no oscillation in the system, decrease Pr.08-02 (Integral Time (I))

  If there is no oscillation in the system, increase Pr.08-03 (Differential Time(D))

📖 Refer to Pr.08-00 to Pr.08-21 for PID parameter settings.

08-01 Proportional Gain (P)

Default: 1.0

Settings 0.0–500.0

📖 1.0: Kp gain is 100%; if the setting is 0.5, Kp gain is 50%.

📖 Sets the proportional gain to determine the deviation response speed. The higher the proportional gain, the faster the response speed. Eliminates the system deviation; usually used to decrease the deviation and get faster response speed, it also reduces the steady-state error. If you set the value too high, overshoot occurs and it may cause system oscillation and instability.

📖 If you set the other two gains (I and D) to zero, proportional control is the only effective parameter.

08-02 Integral Time (I)

Default: 1.00

Settings 0.00–100.00 sec.
0.00: No integral

- Use the integral controller to eliminate the deviation during stable system operation. The integral control does not stop working until the deviation is zero. The integral is affected by the integral time. The smaller the integral time, the stronger integral action. It is helpful to reduce overshoot and oscillation for a stable system. Accordingly, the speed to lower the steady-state deviation decreases. The integral control is often used with the other two controls for the PI controller or PID controller.
- Sets the integral time of the I controller. When the integral time is long, there is a small I controller gain, with slower response and slow external control. When the integral time is short, there is a large I controller gain, with faster response and rapid external control.
- When the integral time is too short, it may cause overshoot or oscillation for the output frequency and system.
- Set Integral Time to 0.00 to disable the I controller.

08-03 Differential Time (D)

Default: 0.00

Settings 0.00–1.00 sec.

- Use the differential controller to show the system deviation change, as well as to preview the change in the deviation. You can use the differential controller to eliminate the deviation in order to improve the system state. Using a suitable differential time can reduce overshoot and shorten adjustment time; however, the differential operation increases noise interference. Note that a too large differential causes more noise interference. In addition, the differential shows the change and the output is 0 when there is no change. Note that you cannot use the differential control independently. You must use it with the other two controllers for the PD controller or PID controller.
- Sets the D controller gain to determine the deviation change response. Using a suitable differential time reduces the P and I controllers overshoot to decrease the oscillation for a stable system. A differential time that is too long may cause system oscillation.
- The differential controller acts on the change in the deviation and cannot reduce the interference. Do not use this function when there is significant interference.

08-04 Upper Limit of Integral Control

Default: 100.0

Settings 0.0–100.0%

- Defines an upper bound for the integral gain (I) and therefore limits the master frequency. The formula is: Integral upper bound = Maximum Operation Frequency (Pr.01-00) × Pr.08-04 %.
- An excessive integral value causes a slow response due to sudden load changes and may cause motor stall or machine damage. If so, decrease it to a proper value.

08-05 PID Output Command Limit

Default: 100.0

Settings 0.0–110.0%

Defines the percentage of the output frequency limit during the PID control. The formula is Output Frequency Limit = Maximum Operation Frequency (Pr.01-00) × Pr.08-05 %.

08-06 PID Feedback Value by Communication Protocol

Default: Read only

Settings -200.00%–200.00%

Use communications to set the PID feedback value when the PID feedback input is set to communications (Pr.08-00 = 7 or 8).

08-07 PID Delay Time

Default: 0.0

Settings 0.0–35.0 sec.

08-20 PID Mode Selection

Default: 0

Settings 0: Serial connection
1: Parallel connection

0: Serial connection, use conventional PID control structure.
1: Parallel connection, the proportional gain, integral gain and differential gain are independent. You can customize the P, I and D value to fit your application.

Pr.08-07 determines the primary low pass filter time when in PID control. Setting a large time constant may slow down the drive's response speed.

PID control output frequency is filtered with a primary low pass function. This function can filter a mix frequencies. A long primary low pass time means the filter degree is high and a short primary low pass time means the filter degree is low.

Inappropriate delay time setting may cause system oscillation.

PI Control:

Controlled only by the P action, so the deviation cannot be entirely eliminated. In general, to eliminate residual deviations, the P + I controls. When you use the PI control, it eliminates the deviation caused by the targeted value changes and the constant external interferences. However, if the I action is too powerful, it delays the responde when there is rapid variation. You can use the P action by itself to control the loading system with the integral components.

PD Control:

When deviation occurs, the system immediately generates an operation load that is greater than the load generated only by the D action to restrain deviation increment. If the deviation is small, the effectiveness of the P action decreases as well. The control objects include applications with integral component loads, which are controlled by the P action only. Sometimes, if the integral component is functioning, the whole system may oscillate. In this case, use the PD control to reduce the P action's oscillation and stabilize the system. In other words, this control is useful with no brake function's loading over the processes.

PID Control:

Use the I action to eliminate the deviation and the D action to reduce oscillation; then combine this with the P action for the PID control. Use the PID method for a control process with no deviations, high accuracies and a stable system.

Serial Connection

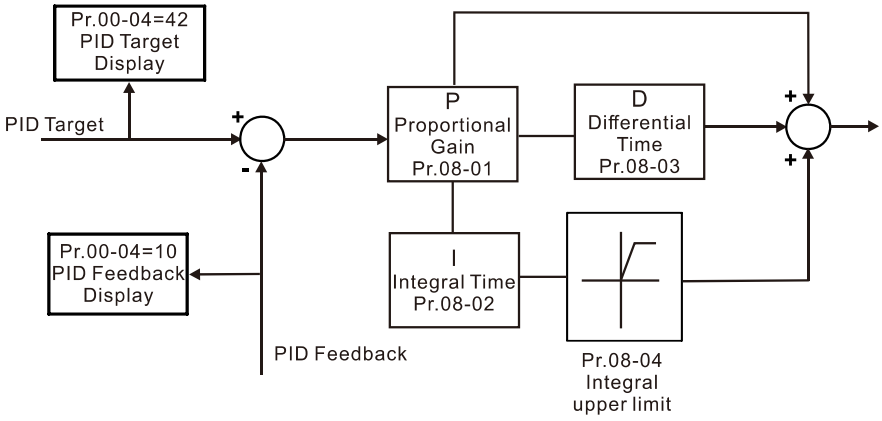

Parallel Connection

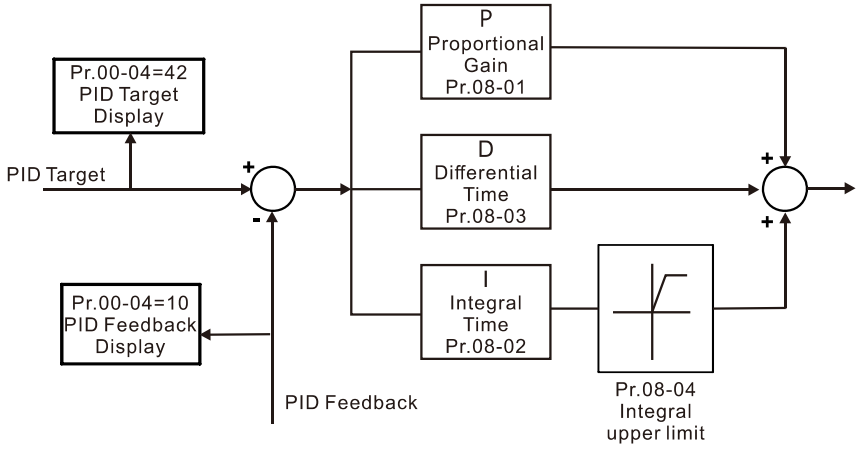

08-08 Feedback Signal Detection Time

Default: 0.0

Settings 0.0–3600.0 sec.

Valid only when the feedback signal is ACI (4–20 mA).

This parameter sets the detection time for abnormal PID signal feedback. You can also use it when the system feedback signal response is extremely slow. (Setting the detection time to 0.0 disables the detection function.)

08-09 Feedback Signal Fault Treatment

Default: 0

Settings 0: Warn and continue operation
1: Fault and ramp to stop
2: Fault and coast to stop
3: Warn and operate at last frequency

Valid only when the feedback signal is ACI (4–20 mA).

Sets the treatments when the PID feedback signal is abnormal.

08-10 Sleep Level

Default: 0.00

Settings 0.00–599.00 Hz / 0.00–200.00%

- Determines the sleep level, and if the sleep time and the wake-up level are enabled or disabled. Pr.08-10 = 0: Disabled; Pr.08-10 ≠ 0: Enabled.

08-11 Wake-up Level

Default: 0.00

Settings 0.00–599.00 Hz / 0.00–200.00%

- When Pr.08-18 = 0, the unit for Pr.08-10 and that for Pr.08-11 switch to frequency. The settings are become 0.00–600.00 Hz.
- When Pr.08-18=1, the unit for Pr.08-10 and that for Pr.08-11 switch to percentage. The settings are between 0.00–200.00%.
- The percentage is based on the current command value, not the maximum value. For example, if the maximum value is 100 kg, and the current command value is 30kg, then if Pr.08-11 = 40%, the value is 12 kg.

08-12 Sleep Delay Time

Default: 0.0

Settings 0.0–6000.0 sec.

- When the frequency command is smaller than the sleep frequency and less than the sleep time, the frequency command is equal to the sleep frequency. However, the frequency command remains at 0.00 Hz until the frequency command becomes equal to or larger than the wake-up frequency.

08-13 PID Feedback Signal Error Deviation Level

Default: 10.0

Settings 1.0–50.0%

08-14 PID Feedback Signal Error Deviation Detection Time

Default: 5.0

Settings 0.1–300.0 sec.

- When the PID control function is normal, it should calculate the value within a period of time that is close to the target value.
- Refer to the PID control diagram for details. When executing PID feedback control, if |PID reference target value – detection value| > Pr.08-13 PID Feedback Signal Error Deviation Level and exceeds Pr.08-14 setting, it is regarded as a PID control fault, and the multi-function output terminal setting 15 (PID feedback error) activates.

08-16 PID Compensation Selection

Default: 0

Settings 0: Parameter setting (Pr.08-17)
1: Analog input

- 0: The setting for Pr.08-17 gives the PID compensation value.

1: Set the analog input (Pr.03-00–03-02) to 13, then the PID compensation value of analog input is displayed on Pr.08-17. At this time, Pr.08-17 is read only).

08-17 PID Compensation

Default: 0.0

Settings -100.0–100.0%

The PID compensation value = maximum PID target value × Pr.08-17. For example, if the maximum operaiton frequency Pr.01-00 = 60.00 Hz, Pr.08-17 = 10.0%, the PID compensation value increases the output frequency 6.00Hz. 60.00Hz × 100.00% × 10.0% = 6.00Hz

08-18 Sleep Mode Function Setting

Default: 0

Settings 0: Refer to PID output command
1: Refer to PID feedback signal

0: The unit for Pr.08-10 and that for Pr.08-11 switch to frequency. The settings are between 0.00–599.00 Hz.

1: The unit for Pr.08-10 and that for Pr.08-11 switch to percentage. The settings are between 0.00–200.00%.

08-19 Wake-up Integral Limit

Default: 50.0

Settings 0.0–200.0%

The wake-up integral limit for the drive prevents suddenly running at high speed when the drive wakes up. Defines the wake-up integral frequency limit = (Pr.01-00 × Pr.08-19%)

Reduces the reaction time from sleep to wake-up.

08-21 Enable PID to Change the Operation Direction

Default: 0

Settings 0: Operation direction cannot be changed
1: Operation direction can be changed

08-22 Wake-up Delay Time

Default: 0.00

Settings 0.00–600.00 sec.

Refer to Pr.08-18 for more information.

08-23 PID Control Flag

Default: 0000h

Settings bit0 = 1, PID running in reverse follows the setting for Pr.00-23
bit0 = 0, PID running in reverse follows PID's calculated value
bit1 = 1, two decimal places for PID Kp
bit1 = 0, one decimal place for PID Kp

bit0 = 1: PID running in reverse function is valid only when Pr.08-21=1.

bit0 = 0, if the PID calculated value is positive, the direction is forward. If the PID calculated value is negative, the direction is reverse.

There are three scenarios for the sleep and wake-up frequency. Refer to following explanations:

1) Frequency Command (PID is not in use, Pr.08-00 = 0. Works only in VF mode)

When the output frequency ≤ the sleep frequency, and the drive reaches the preset sleep time, then the the drive is in sleep mode (0 Hz). When the frequency command reaches the wake-up frequency, the drive starts to count the wake-up delay time. When the drive reaches the wake-up delay time, it starts to catch up to reach the frequency command value by the acceleration time.

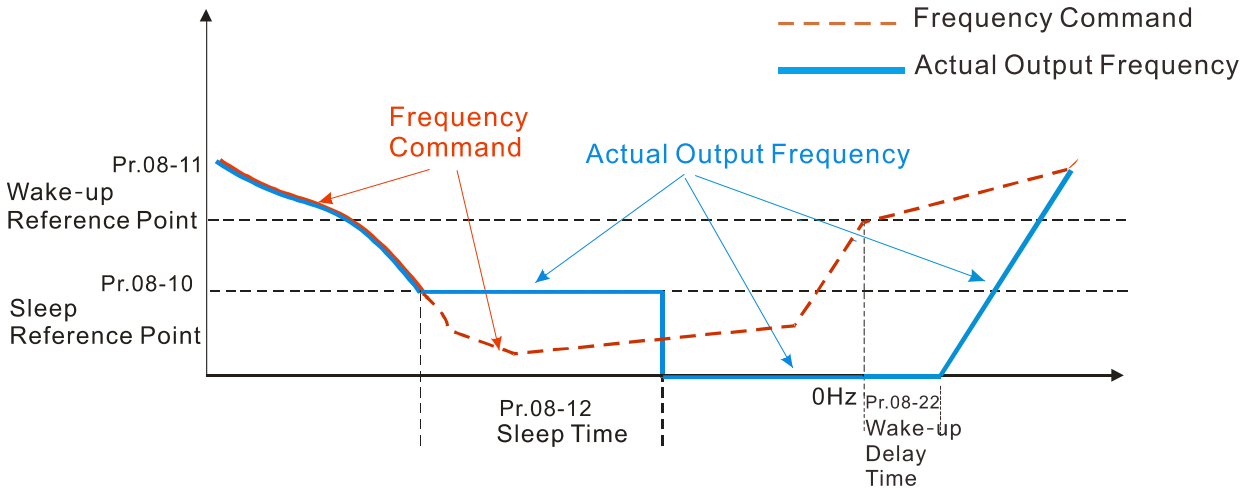

2) Internal PID Calculation Frequency Command (PID is in use, Pr.08-00 ≠ 0 and Pr.08-18=0.)

When the PID calculation Frequency command reaches the sleep frequency, the drive starts to count the sleep time and the output frequency starts to decrease. If the drive exceeds the preset sleep time, then the drive is in sleep mode (0Hz). If the drive does not reach the preset sleep time, it remains at the lower frequency limit (if there is a preset lower limit.), or it remains at the minimum output frequency set at Pr.01-07 and waits until it reaches the sleep time before it going into sleep mode (0Hz). When the PID calculated Frequency command reaches the wake-up frequency, the drive starts to count the wake-up delay time. Once it reaches the wake-up delay time, the drive starts to catch up to reach the PID Frequency command value by the acceleration time.

Internal PID Calculation Frequency Command

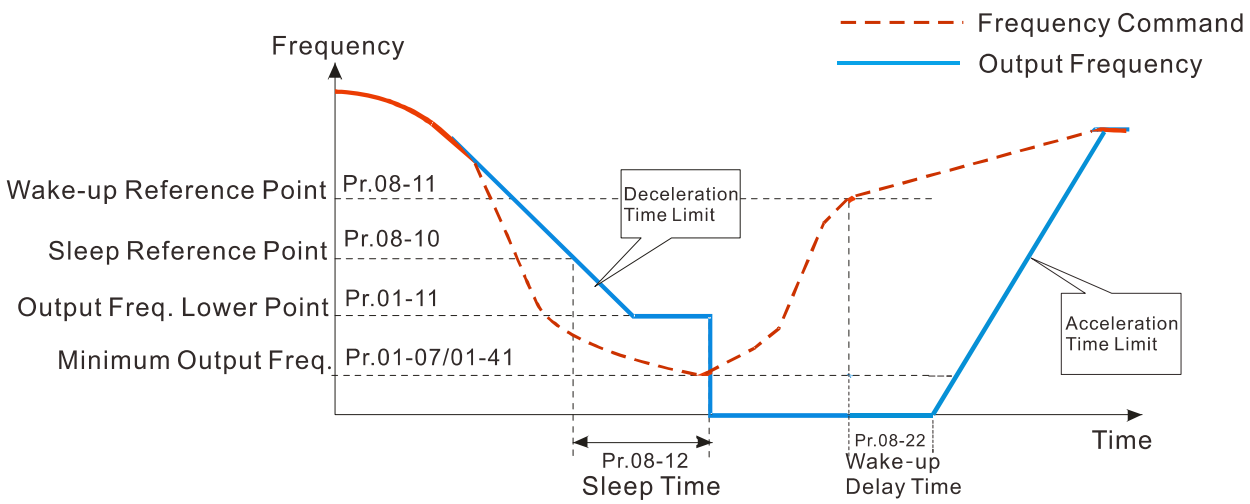

3) PID Feedback Value Rate Percentage (PID is in use, Pr.08-00 ≠ 0 and Pr.08-18 = 1)

When the PID feedback value reaches the sleep level percentage, the drive starts to count the sleep time and the output frequency starts to decrease. If the drive exceeds the preset sleep time, then the drive is in sleep mode (0 Hz). If the drive does not reach the preset sleep time, it remains at the lower frequency limit (if there is a preset of lower limit.), or it remains at the minimum output frequency set for Pr.01-07 and waits until it reaches the sleep time before going into sleep mode (0 Hz).

When the PID feedback value reaches the wake-up percentage, the drive starts to count the wake-up delay time. Once it reaches the wake-up delay time, the drive starts to catch up to reach the PID Frequency command value by the acceleration time.

Example 01: PID negative feedback

- Pr.08-10 must > Pr.08-11
- 30kg is the reference
- Set the parameter:
  Pr.03-00 = 5 (AVI is PID feedback)
  Pr.08-00 = 1 (PID negative feedback: AVI simulation input function select)
  Pr.08-10 = 40% (Sleep reference: 12kg = 40%*30kg)
  Pr.08-11 = 20% (Wake-up reference: 6kg = 20%*30kg)
  Case 01: If feedback >12kg, frequency decreases.
  Case 02: If feedback <6kg, frequency increases.

Area	PID Physical quantity
Sleep area	> 12 kg, the drive goes into sleep, the motor goes into sleep
Excessive area	between 6 kg and 12 kg, the drive remains in current state
Wake-up area	< 6 kg, the drive wakes-up, the motor wakes-up

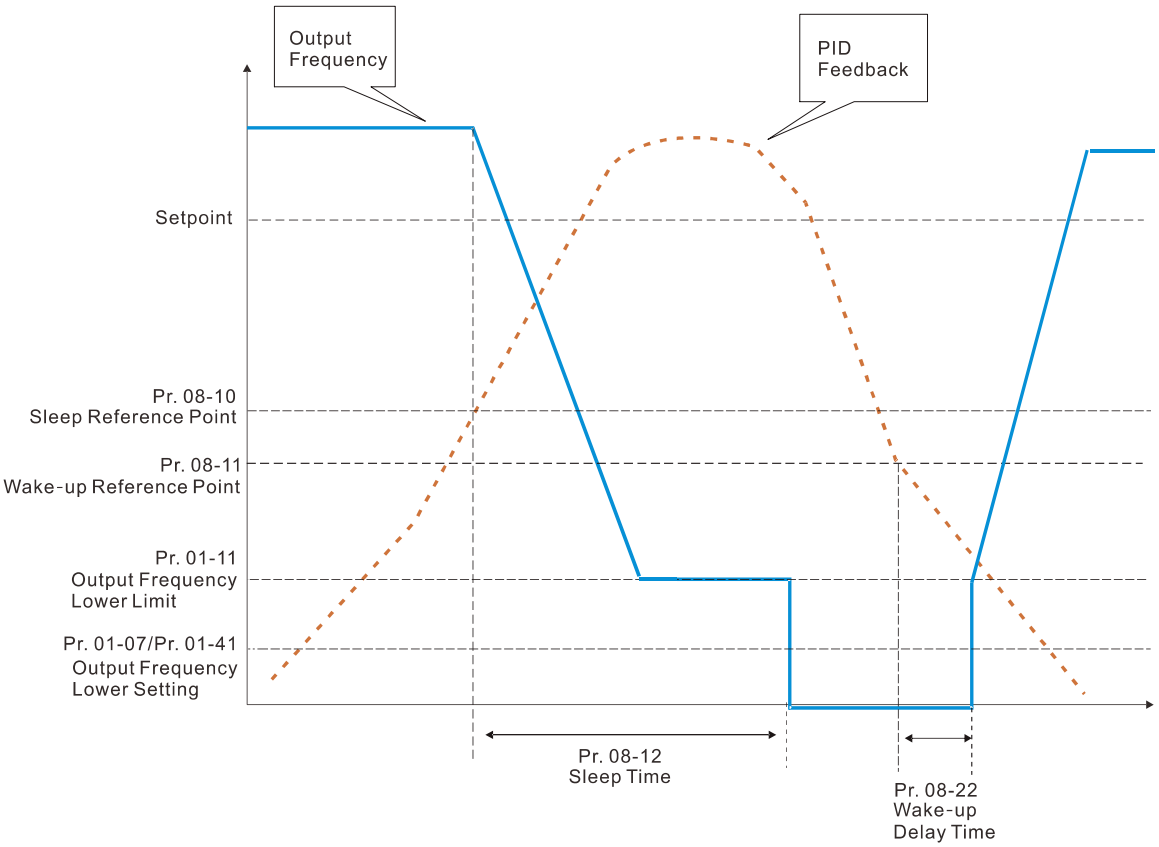

Example 02: PID positive feedback

- Pr.08-10 must < Pr.08-11
- 30kg is the reference
- Set the parameter:

  Pr.03-00 = 5 (AVI is PID feedback)

  Pr.08-00 = 4 (PID positive feedback: AVI simulation input function select)

  Pr.08-10 = 110% (Sleep reference: 33kg = 110%*30kg)

  Pr.08-11 = 120% (Wake-up reference: 36kg = 120%*30kg)

  Case 01: If feedback <33kg, frequency decreases.

  Case 02: If feedback >36kg, frequency increases.

Area	PID Physical quantity
Sleep area	> 36 kg, the drive goes into sleep, the motor goes into sleep
Excessive area	between 33 kg and 36 kg, the drive remains in the current state
Wake-up area	< 33 kg, the drive wakes-up

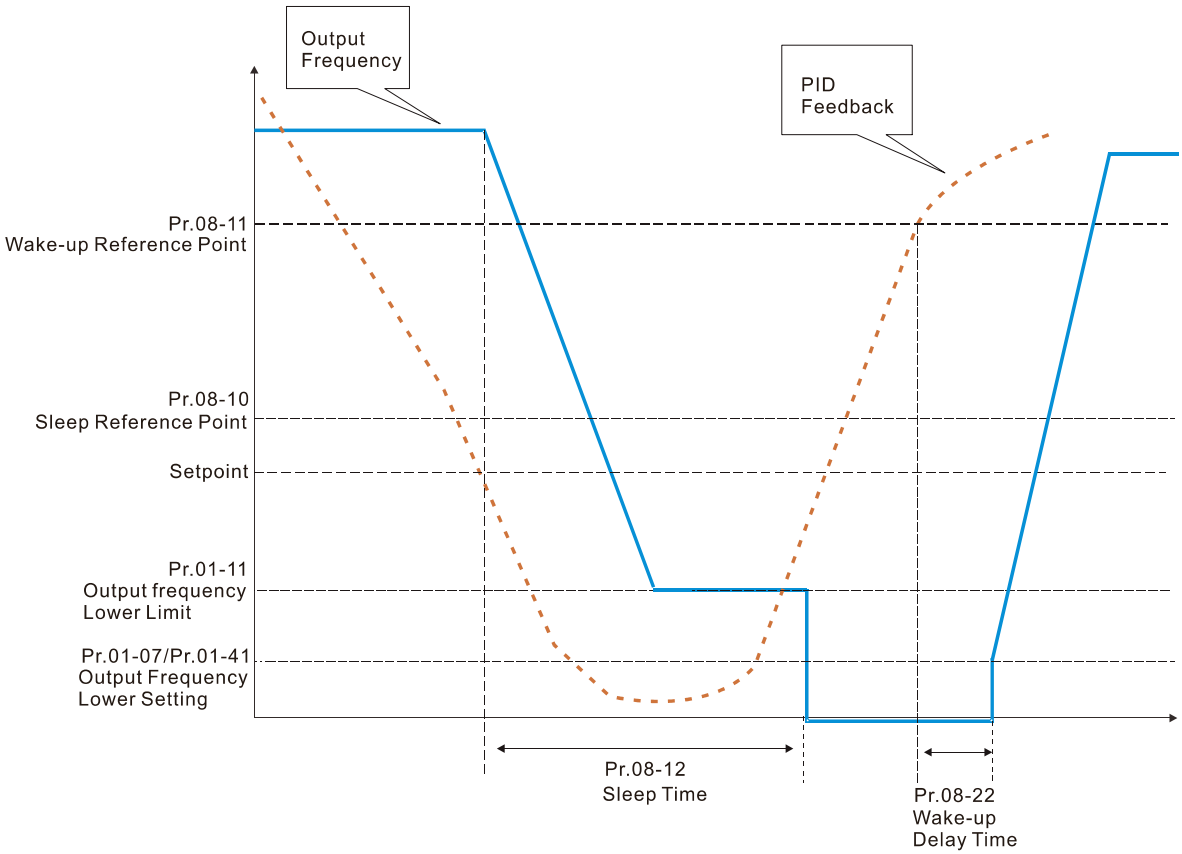

09 Communication Parameters

You can set this parameter during the operation.

When using the communication interface, the diagram on the right shows the communication port pin definitions. We recommend that you connect the AC motor drive to your PC by using Delta IFD6530 orIFD6500 as a communication converter.

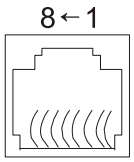

Modbus RS-485
Pin 1, 2, 6: Reserved
Pin 3, 7: SGND
Pin 4: SG-
Pin 5: SG+
Pin 8: +10VS

09-00 Communication Address

Default: 1

Settings 1–254

Sets the communication address for the drive if the AC motor drive is controlled through RS-485 serial communication. The communication address for each AC motor drive must be unique.

09-01 COM1 Transmission Speed

Default: 9.6

Settings 4.8–115.2 Kbps

Sets the transmission speed between the computer and the AC motor drive.

Options are 4.8 Kbps, 9.6 Kbps, 19.2 Kbps, 38.4 Kbps, 57.6 Kbps, or 115.2 Kbps; otherwise, the transmission speed is set to the default 9.6 Kbps.

09-02 COM1 Transmission Fault Treatment

Default: 3

Settings 0: Warn and continue operation
1: Fault and ramp to stop
2: Fault and coast to stop
3: No warning, no fault and continue operation

Determines the treatment when an error is detected that the host controller does not continuously transmit data to the AC motor drive during Modbus communication. The detection time is based on the Pr.09-03 setting.

09-03 COM1 Time-out Detection

Default: 0.0

Settings 0.0–100.0 sec.

Sets the communication time-out value.

09-04 COM1 Communication Protocol

Default: 1

Settings 1: 7, N, 2 (ASCII)
2: 7, E, 1 (ASCII)
3: 7, O, 1 (ASCII)
4: 7, E, 2 (ASCII)

5: 7, O, 2 (ASCII)
6: 8, N, 1 (ASCII)
7: 8, N, 2 (ASCII)
8: 8, E, 1 (ASCII)
9: 8, O, 1 (ASCII)
10: 8, E, 2 (ASCII)
11: 8, O, 2 (ASCII)
12: 8, N, 1 (RTU)
13: 8, N, 2 (RTU)
14: 8, E, 1 (RTU)
15: 8, O, 1 (RTU)
16: 8, E, 2 (RTU)
17: 8, O, 2 (RTU)

📖 Control by PC (Computer Link)

When using the RS-485 serial communication interface, you must specify each drive's communication address in Pr.09-00. The computer then implements control using the drives' individual addresses.

📖 Modbus ASCII (American Standard Code for Information Interchange): Each byte of data is the combination of two ASCII characters. For example, one byte of data: 64 Hex, shown as '64' in ASCII, consists of '6' (36Hex) and '4' (34Hex).

1. Code Description

The communication protocol is in hexadecimal, ASCII: "0"…"9", "A"…"F", every hexadecimal value represents an ASCII code. The following table shows some examples.

Character	'0'	'1'	'2'	'3'	'4'	'5'	'6'	'7'
ASCII code	30H	31H	32H	33H	34H	35H	36H	37H

Character	'8'	'9'	'A'	'B'	'C'	'D'	'E'	'F'
ASCII code	38H	39H	41H	42H	43H	44H	45H	46H

2. Data Format

10-bit character frame (For ASCII):

(7, N, 2)

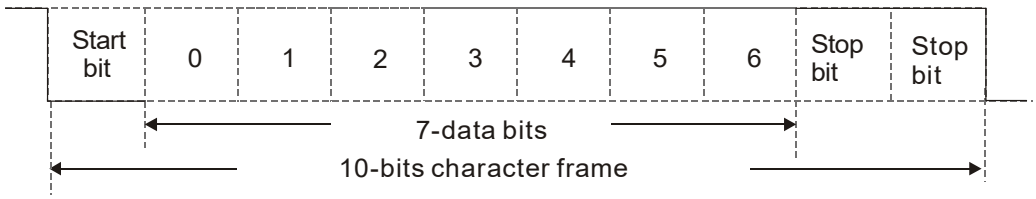

(7, E, 1)

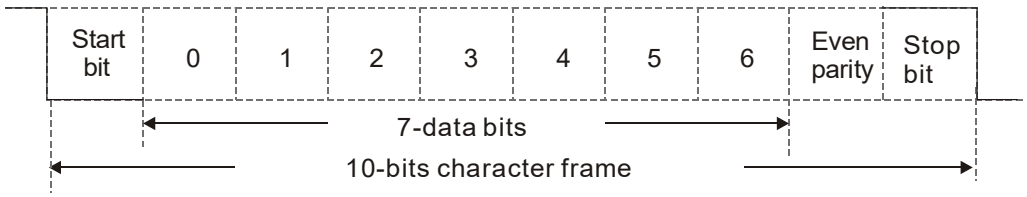

(7, O, 1)

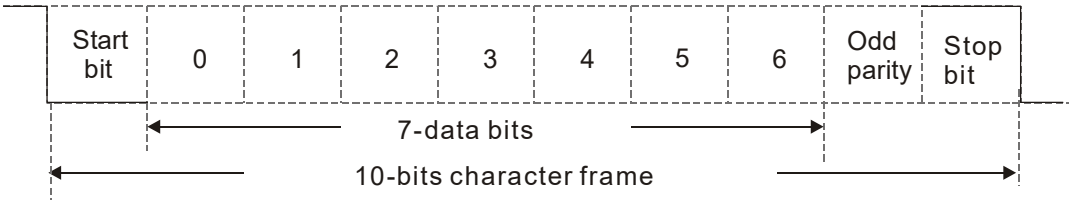

11-bit character frame (For RTU):

(8, N, 2)

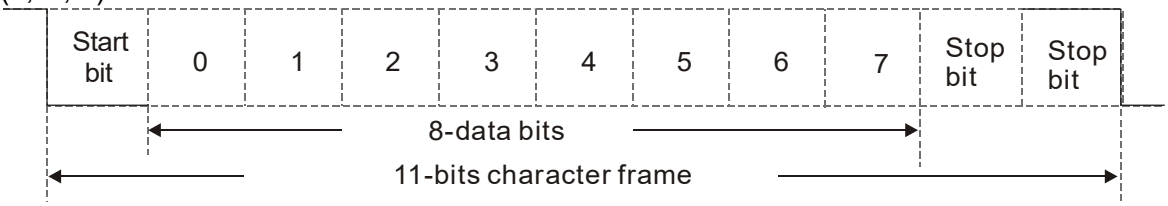

(8, E, 1)

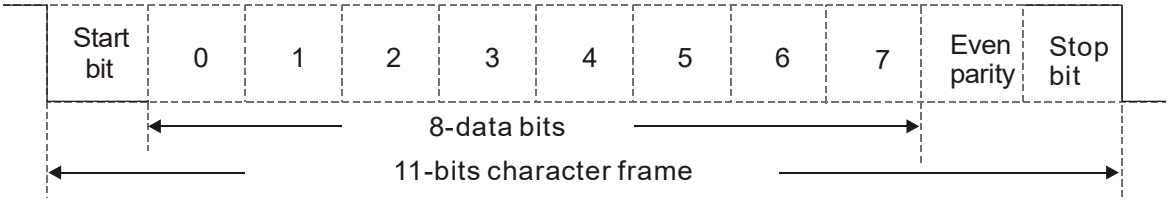

(8, O, 1)

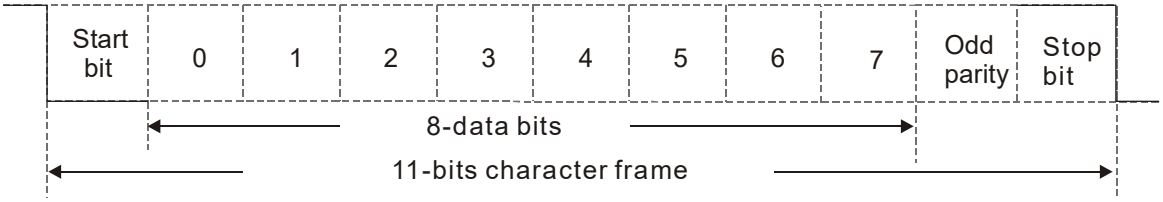

3. Communication Protocol

3.1 Communication Data Frame:

ASCII mode:

STX	Start character = ':' (3AH)
Address High	Communication address:
Address Low	one 8-bit address consists of 2 ASCII codes
Function High	Command code:
Function Low	one 8-bit command consists of 2 ASCII codes
DATA (n-1)	Contents of data:
…….	n x 8-bit data consists of 2n ASCII codes
DATA 0	n ≤ 16, maximum of 32 ASCII codes (20 sets of data)
LRC Check High	LRC checksum:
LRC Check Low	one 8-bit checksum consists of 2 ASCII codes
END High	End characters:
END Low	END1= CR (0DH), END0= LF(0AH)

RTU mode:

START	Defined by a silent interval of larger than / equal to 10 ms
Address	Communication address: 8-bit binary address
Function	Command code: 8-bit binary command
DATA (n-1)	Contents of data: N × 8-bit data, n ≤ 16
…….	
DATA 0	
CRC Check Low	CRC checksum: one 16-bit CRC checksum consists of 2 8-bit binary characters
CRC Check High	
END	Defined by a silent interval of larger than / equal to 10 ms

3.2 Communication Address (Address)

00H: broadcast to all AC motor drives

01H: AC motor drive of address 01

0FH: AC motor drive of address 15

10H: AC motor drive of address 16

:

FEH: AC motor drive of address 254

3.3 Function (Function code) and DATA (Data characters)

(01) 03H: read data from a register

06H: write to a single register

Example: Reading two continuous data from register address 2102H, AMD address is 01H.

ASCII mode:

Command Message:

STX	‘:’
Address	‘0’
	‘1’
Function	‘0’
	‘3’
Starting register	‘2’
	‘1’
	‘0’
	‘2’
Number of register (count by word)	‘0’
	‘0’
	‘0’
	‘2’
LRC Check	‘D’
	‘7’
END	CR
	LF

Response Message

STX	‘:’
Address	‘0’
	‘1’
Function	‘0’
	‘3’
Number of register (count by byte)	‘0’
	‘4’
Content of starting register 2102H	‘1’
	‘7’
	‘7’
	‘0’
Content of register 2103H	‘0’
	‘0’
	‘0’
	‘0’
LRC Check	‘7’
	‘1’
END	CR
	LF

RTU mode:

Command Message:

Address	01H
Function	03H
Starting data register	21H
	02H
Number of register (count by word)	00H
	02H
CRC Check Low	6FH
CRC Check High	F7H

Response Message

Address	01H
Function	03H
Number of register (count by byte)	04H
Content of register address 2102H	17H
	70H
Content of register address 2103H	00H
	00H
CRC Check Low	FEH
CRC Check High	5CH

(02) 06H: single write, write single data to a register.

Example: Writing data 6000 (1770H) to register 0100H. AMD address is 01H.

ASCII mode:

Command Message:

STX	‘:’
Address	‘0’
	‘1’
Function	‘0’
	‘6’
Target register	‘0’
	‘1’
	‘0’
	‘0’
Register content	‘1’
	‘7’
	‘7’
	‘0’
LRC Check	‘7’
	‘1’
END	CR
	LF

Response Message

STX	‘:’
Address	‘0’
	‘1’
Function	‘0’
	‘6’
Target register	‘0’
	‘1’
	‘0’
	‘0’
Register content	‘1’
	‘7’
	‘7’
	‘0’
LRC Check	‘7’
	‘1’
END	CR
	LF

RTU mode:

Command Message:

Address	01H
Function	06H
Target register	01H
	00H
Register content	17H
	70H
CRC Check Low	86H
CRC Check High	22H

Response Message

Address	01H
Function	06H
Target register	01H
	00H
Register content	17H
	70H
CRC Check Low	86H
CRC Check High	22H

(03) 10H: write multiple registers (can write at most 20 sets of data simultaneously).

Example: Set the multi-step speed of an AC motor drive (address is 01H),

Pr.04-00 = 50.00 (1388H), Pr.04-01 = 40.00 (0FA0H).

ASCII Mode

Command Message:

STX	':'
ADR 1	'0'
ADR 0	'1'
CMD 1	'1'
CMD 0	'0'
Target register	'0'
	'5'
	'0'
	'0'
Number of register (count by word)	'0'
	'0'
	'0'
	'2'
Number of register (count by byte)	'0'
	'4'
The first data content	'1'
	'3'
	'8'
	'8'
The second data content	'0'
	'F'
	'A'
	'0'
LRC Check	'9'
	'A'
END	CR
	LF

Response Message

STX	':'
ADR 1	'0'
ADR 0	'1'
CMD 1	'1'
CMD 0	'0'
Target register	'0'
	'5'
	'0'
	'0'
Number of register (count by word)	'0'
	'0'
	'0'
	'2'
LRC Check	'E'
	'8'
END	CR
	LF

RTU mode:

Command Message:

ADR	01H
CMD	10H
Target register	05H
	00H
Number of register (Count by word)	00H
	02H
Quantity of data (byte)	04
The first data content	13H
	88H
The second data content	0FH
	A0H
CRC Check Low	'9'
CRC Check High	'A'

Response Message:

ADR	01H
CMD	10H
Target register	05H
	00H
Number of register (Count by word)	00H
	02H
CRC Check Low	41H
CRC Check High	04H

3.4 Checksum

(1) ASCII mode (LRC Check):

LRC (Longitudinal Redundancy Check) is calculated by summing up the values of the bytes from ADR1 to last data character then calculating the hexadecimal representation of the 2's-complement negation of the sum.

Example:

01H + 03H + 21H + 02H + 00H + 02H = 29H, the 2's-complement negation of 29H is D7H.

(2) RTU mode (CRC Check):

CRC (Cyclical Redundancy Check) is calculated by the following steps:

Step 1: Load a 16-bit register (called CRC register) with FFFFh.

Step 2: Exclusive OR the first 8-bit byte of the command message with the low order byte of the 16-bit CRC register, putting the result in the CRC register.

Step 3: Examine the LSB of CRC register.

Step 4: If the LSB of CRC register is 0, shift the CRC register one bit to the right, fill MSB with zero, then repeat step 3. If the LSB of CRC register is 1, shift the CRC register one bit to the right, fill MSB with zero, Exclusive OR the CRC register with the polynomial value A001H, then repeat step 3.

Step 5: Repeat step 3 and 4 until you perform eight shifts. This processes a complete 8-bit byte.

Step 6: Repeat step 2 through 5 for the next 8-bit byte of the command message. Continue doing this until all bytes are processed. The final contents of the CRC register are the CRC value. When transmitting the CRC value in the message, the upper and lower bytes of the CRC value must be swapped, that is, the lower order byte is transmitted first.

The following is an example of CRC generation using C language.

The function takes two arguments:

Unsigned char* data ← a pointer to the message buffer

Unsigned char length ← the quantity of bytes in the message buffer

The function returns the CRC value as a type of unsigned integer.

Unsigned int crc_chk(unsigned char* data, unsigned char length)

```
{
        int j;
        unsigned int reg_crc=0xffff;
        while(length--){
                reg_crc ^= *data++;
                for(j=0;j<8;j++){
                        if(reg_crc & 0x01){    /* LSB(b0)=1 */
                                reg_crc=(reg_crc>>1) ^ 0xa001;
                        }else{
                                reg_crc=reg_crc >>1;
                        }
                }
        }
        return reg_crc;                         // return register CRC
}
```

4. Address list

AC motor drive parameters

Modbus address	Function
GGnnH	GG is the parameter group, nn is the parameter number; for example, the address of Pr.04-10 is 040AH.

Control command (20xx)

Modbus address	R/W	Function	
2000H	RW	bit1–0	00B: No function
			01B: Stop
			10B: Run
			11B: JOG + RUN
		bit3–2	Reserved
		bit5–4	00B: No function
			01B: FWD
			10B: REV
			11B: Change direction
		bit7–6	00B: 1st acceleration / deceleration
			01B: 2nd acceleration / deceleration
			10B: 3rd acceleration / deceleration
			11B: 4th acceleration / deceleration
		bit11–8	000B: Master speed
			0001B: 1st Step speed frequency

Modbus address	R/W	Function	
			0010B: 2nd Step speed frequency
			0011B: 3rd Step speed frequency
			0100B: 4th Step speed frequency
			0101B: 5th Step speed frequency
			0110B: 6th Step speed frequency
			0111B: 7th Step speed frequency
			1000B: 8th Step speed frequency
			1001B: 9th Step speed frequency
			1010B: 10th Step speed frequency
			1011B: 11th Step speed frequency
			1100B: 12th Step speed frequency
			1101B: 13th Step speed frequency
			1110B: 14th Step speed frequency
			1111B: 15th Step speed frequency
		bit12	1: Enable bit06–11 function
		bit15	Reserved
2001H	RW	Frequency command (XXX.XX Hz)	
2002H	RW	bit0	1: E.F. ON
		bit1	1: Reset
		bit2	1: Base block (B.B) ON
		bit15–3	Reserved

Status monitor read only (21xx)

Modbus address	R/W	Function	
2100H	R	High byte: Warn Code Low Byte: Error Code	
2101H	R	bit1–0	AC motor drive operation status 00B: Drive stops 01B: Drive decelerating 10B: Drive standby 11B: Drive operating
		bit2	1：JOG Command
		bit4–3	Operation Direction 00B: FWD run 01B: From REV run to FWD run 10B: From FWD run to REV run 11B: REV run
		bit8	1: Master frequency controlled by communication interface

Modbus address	R/W	Function	
		bit9	1: Master frequency controlled by analog/external signal
		bit10	1: Operation command controlled by communication interface
		bit11	1: Parameter locked
		bit12	1: Enable to copy parameters from keypad
		bit15–13	Reserved
2102H	R	Frequency command (XXX.XX Hz)	
2103H	R	Output frequency (XXX.XX Hz)	
2104H	R	Output current (XX.XX A). When current is higher than 655.35, it shifts the decimal as (XXX.X A). The decimal can refer to High byte of 211F.	
2105H	R	DC bus Voltage (XXX.X V)	
2106H	R	Output voltage (XXX.X V)	
2107H	R	Current step number of multi-step speed operation	
2108H	R	Reserved	
2109H	R	Counter value	
210AH	R	Power factor angle (XXX.X)	
210BH	R	Output torque (XXX.X %)	
210CH	R	Actual motor speed (XXXXX rpm)	
210DH	R	Number of PG feedback pulses (0–65535)	
210EH	R	Number of PG2 pulse commands (0–65535)	
210FH	R	Power output (X.XXX kW)	
2116H	R	Multi-function display (Pr.00-04)	
211BH	R	Maximum Operation Frequency (Pr.01-00) or Maximum User-defined Value (Pr.00-26) When Pr.00-26 is 0, this value is equal to Pr.01-00 setting When Pr.00-26 is not 0, and the command source is keypad, this value = Pr.00-24 × Pr.00-26 / Pr.01-00 When Pr.00-26 is not 0, and the command source is 485, this value = Pr.09-10 × Pr.00-26 / Pr.01-00	
211FH	R	High byte: decimal of current value (display)	

Status monitor read only (22xx)

Modbus address	RW	Function
2200H	R	Display output current (A). When current is higher than 655.35, it shifts the decimal as (XXX.X A). The decimal can refer to High byte of 211F.
2201H	R	Display counter value (c)
2202H	R	Actual output frequency (XXXXX Hz)
2203H	R	DC bus voltage (XXX.X V)

Modbus address	RW	Function
2204H	R	Output voltage (XXX.X V)
2205H	R	Power angle (XXX.X)
2206H	R	Display actual motor speed kW of U, V, W (XXXX.X kW)
2207H	R	Display motor speed in rpm estimated by the drive or encoder feedback (XXXXX rpm)
2208H	R	Display positive/negative output torque in %, estimated by the drive (t0.0: positive torque, -0.0: negative torque) (XXX.X %)
2209H	R	Display PG feedback (see NOTE 1 in Pr.00-04)
220AH	R	PID feedback value after enabling PID function (XXX.XX %)
220BH	R	Display signal of AVI analog input terminal, 0–10 V corresponds to 0.00–100.00% (1.) (see NOTE 2 in Pr.00-04)
220CH	R	Display signal of ACI analog input terminal, 4–20 mA / 0–10 V corresponds to 0.00–100.00% (2.) (see NOTE 2 in Pr.00-04)
220DH	R	Display signal of AUI analog input terminal, -10 V–10 V corresponds to -100.00–100% (3.) (see NOTE 2 in Pr.00-04)
220EH	R	IGBT temperature of drive power module (XXX.XºC)
220FH	R	The temperature of capacitance (XXX.XºC)
2210H	R	The status of digital input (ON/OFF), refer to Pr.02-12 (see NOTE 3 in Pr.00-04)
2211H	R	The status of digital output (ON/OFF), refer to Pr.02-18 (see NOTE 4 in Pr.00-04)
2212H	R	The multi-step speed that is executing (S)
2213H	R	The corresponding CPU pin status of digital input (d.) (see NOTE 3 in Pr.00-04)
2214H	R	The corresponding CPU pin status of digital output (O.) (see NOTE 4 in Pr.00-04)
2215H	R	Number of actual motor revolution (PG1 of PG card) (P.) it starts from 9 when the actual operation direction is changed or the keypad displays at stop is 0. The maximum is 65535
2216H	R	Pulse input frequency (PG2 of PG card) (XXX.XX Hz)
2217H	R	Pulse input position (PG card PG2), the maximum setting is 65535.
2218H	R	Position command tracing error
2219H	R	Display times of counter overload (XXX.XX %)
221AH	R	GFF (XXX.XX%)
221BH	R	DCBUS voltage ripples (XXX.X V)
221CH	R	PLC register D1043 data (C)
221DH	R	Number of poles of a permanent magnet motor
221EH	R	User page displays the value in physical measure

Modbus address	RW	Function	
221FH	R	Output Value of Pr.00-05 (XXX.XX Hz)	
2220H	R	Number of motor turns when drive operates (saves when drive stops, and resets to zero when operating)	
2221H	R	Operating position of the motor (saves when drive stops, and resets to zero when operating)	
2222H	R	Fan speed of the drive (XXX%)	
2223H	R	Control mode of the drive 0: speed mode 1: torque mode	
2224H	R	Carrier frequency of the drive (XX kHz)	
2225H	R	Reserve	
2226H	R	Drive status bit1–0	00b: No direction 01b: Forward 10b: Reverse
		bit3–2	01b: Drive ready 10b: Error
		bit4	0b: Motor drive did not output 1b: Motor drive did output
		bit5	0b: No alarm 1b: Alarm
2227H	R	Drive's estimated output torque (positive or negative direction) (XXXX Nt-m)	
2228H	R	Torque command (XXX.X%)	
2229H	R	kWh display (XXXX.X)	
222AH	R	PG2 pulse input in Low Word	
222BH	R	PG2 pulse input in High Word	
222CH	R	Motor actual position in Low Word	
222DH	R	Motor actual position in High Word	
222EH	R	PID reference (XXX.XX%)	
222FH	R	PID offset (XXX.XX%)	
2230H	R	PID output frequency (XXX.XX Hz)	
2231H	R	Hardware ID	

Remote IO (26xx)

Modbus address	RW	Function
2600H	R	Each bit corresponds to different terminal input contact
2640H	RW	Each bit corresponds to different terminal output contact
2660H	R	AVI proportional value
2661H	R	ACI proportional value

Modbus address	RW	Function
2662H	R	AUI proportional value
266AH	R	Extension card AI10, 0.0–100.0% (EMC-A22A)
266BH	R	Extension card AI11, 0.0–100.0% (EMC-A22A)
26A0H	RW	AFM1 output proportional value
26A1H	RW	AFM2 output proportional value
26AAH	RW	Extension card AO10, 0.0–100.0% (EMC-A22A)
26ABH	RW	Extension card AO11, 0.0–100.0% (EMC-A22A)

5. Exception response:

When the drive is using the communication connection, if an error occurs, the drive responds to the error code and sets the highest bit (bit 7) of the command code to 1 (function code AND 80H) then responds to the control system to signal that an error occurred.

If the keypad displays “CE-XX” as a warning message, “XX” is the error code at that time. Refer to the table of error codes for communication error for reference.

Example:

ASCII mode:

STX	‘:’
Address	‘0’
	‘1’
Function	‘8’
	‘6’
Exception code	‘0’
	‘2’
LRC Check	‘7’
	‘7’
END	CR
	LF

RTU mode:

Address	01H
Function	86H
Exception code	02H
CRC Check Low	C3H
CRC Check High	A1H

The explanation of exception codes:

Error code	Explanation
1	Function code is not supported or unrecognized.
2	Address is not supported or unrecognized.
3	Data is not correct or unrecognized.
4	Failure to execute this function code

09-09 Communication Response Delay Time

Default: 2.0

Settings 0.0–200.0 ms

If the host controller does not finish the transmitting/receiving process, you can use this parameter to set the response delay time after the AC motor drive receives communication command as shown in the following picture.

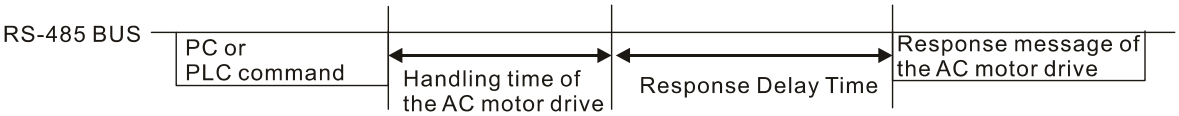

09-10 Communication Main Frequency

Default: 60.00

Settings 0.00–599.00 Hz

When you set Pr.00-20 to 1 (RS-485 serial communication input), the AC motor drive saves the last Frequency command into Pr.09-10 when there is abnormal power off or momentary power loss. When power is restored, the AC motor drive operates with the frequency in Pr.09-10 if no new Frequency command input. When a Frequency command of RS-485 changes (the frequency command source must be set as Modbus), this parameter also changes.

09-11 Block Transfer 1
09-12 Block Transfer 2
09-13 Block Transfer 3
09-14 Block Transfer 4
09-15 Block Transfer 5
09-16 Block Transfer 6
09-17 Block Transfer 7
09-18 Block Transfer 8
09-19 Block Transfer 9
09-20 Block Transfer 10
09-21 Block Transfer 11
09-22 Block Transfer 12
09-23 Block Transfer 13
09-24 Block Transfer 14
09-25 Block Transfer 15
09-26 Block Transfer 16

Default: 0000h

Settings 0000–FFFFh

There is a group of block transfer parameters available in the AC motor drive (Pr.09-11–Pr.09-26). Using communication code 03H, you can store the parameters (Pr.09-11–Pr.09-26) that you want to read.

For example: according to the Address List (as shown in the table below), Pr.01-42 is shown as 012A. Set Pr.09-11 to 012Ah (the minimum voltage of Pr.01-42 M2 is 2.0 V), and use Pr.09-11 (communication address 090B) to read the communication parameter, the read value is 2.0.

AC motor drive parameters	GGnnH	GG is the parameter group, nn is the parameter number; for example, the address of Pr.04-10 is 040AH.

Mind if the block transfer parameters are read only. If the data is written to read-only parameters from the upper unit, a communication error may occur.

09-30 Communication Decoding Method

Default: 1

Settings 0: Decoding Method 1 (20xx)
1: Decoding Method 2 (60xx)

The EtherCAT communication card only supports Decoding Method 2 (60xx).

		Decoding Method 1	Decoding Method 2
Source of Operation Control	Digital Keypad	Digital keypad controls the drive action regardless of decoding method 1 or 2.	
	External Terminal	External terminal controls the drive action regardless of decoding method 1 or 2.	
	RS-485	Refer to address: 2000h–20FFh	Refer to address: 6000h–60FFh
	CANopen	Refer to index: 2020-01h–2020-FFh	Refer to index:2060-01h–2060-FFh
	Communication Card	Refer to address: 2000h–20FFh	Refer to address: 6000h–60FFh
	PLC	PLC command controls the drive action regardless of decoding method 1 or 2.	

09-31 Internal Communication Protocol

Default: 0

Settings 0: Modbus 485
-1: Internal Communication Slave 1
-2: Internal Communication Slave 2
-3: Internal Communication Slave 3
-4: Internal Communication Slave 4
-5: Internal Communication Slave 5
-6: Internal Communication Slave 6
-7: Internal Communication Slave 7
-8: Internal Communication Slave 8
-10: Internal Communication Master
-12: Internal PLC Control

When it is defined as internal communication, refer to Section 16-10 for Main Control Terminal of Internal Communication.

When it is defined as internal PLC control, refer to Section 16-12 for Remote IO control application (using MODRW).

09-33 PLC Command Force to 0

Default: 0

Setting bit0: Before PLC scans, set the PLC target frequency = 0
bit1: Before PLC scans, set the PLC target torque = 0
bit2: Before PLC scans, set the speed limit of torque control mode = 0

Defines whether the Frequency command or the Speed command must be cleared to zero or not before the PLC starts the next scan.

09-35 PLC Address

Default: 2

Settings 1–254

09-36 CANopen Slave Address

Default: 0

Settings 0: Disable
1–127

09-37 CANopen Speed

Default: 0

Settings 0: 1 Mbps
1: 500 Kbps
2: 250 Kbps
3: 125 Kbps
4: 100 Kbps (Delta only)
5: 50 Kbps

09-39 CANopen Warning Record

Default: Read only

Settings bit0: CANopen Guarding Time-out
bit1: CANopen Heartbeat Time-out
bit2: CANopen SYNC Time-out
bit3: CANopen SDO Time-out
bit4: CANopen SDO buffer overflow
bit5: CANopen hardware disconnection warning (Can Bus OFF)
bit6: Error protocol of CANopen
bit8: The setting values of CANopen indexes are fail
bit9: The setting value of CANopen address is fail
bit10: The checksum value of CANopen indexes is fail

09-40 CANopen Decoding Method

Default: 1

Settings 0: Disable (Delta-defined decoding method)
1: Enable (CANopen DS402 Standard protocol)

09-41 CANopen Communication Status

Default: 0

Settings 0: Node Reset State
1: Com Reset State
2: Boot up State
3: Pre-operation State
4: Operation State
5: Stop State

09-42 CANopen Control Status

Default: Read Only

Settings 0: Not ready for use state
1: Inhibit start state
2: Ready to switch on state

3: Switched on state
4: Enable operation state
7: Quick stop active state
13: Error reaction activation state
14: Error state

09-45 CANopen Master Function

Default: 0

Settings 0: Disable
1: Enable

09-46 CANopen Master Address

Default: 100

Settings 0–127

09-49 CANopen Extension Setting

Default: 0002h

Settings bit0: Index 604F and 6050 update to the 1st acceleration / deceleration time or not.
bit0=0: update to the 1st acceleration / deceleration time (default)
bit0=1: do not update
bit1: The verification of CANopen identification code is distinguished by power module or drive series.
bit1=0: distinguished by power module
bit1=1: distinguished by drive series

📖 bit0=0, control the first acceleration time (Pr.01-12) and the first deceleration time (Pr.01-13) directly via CANopen.

📖 Each series of the drive and each power module of drive have its own EDS file and this is more cumbersome and unmanageable. Therefore, using 09-49 bit1=1 CANopen identification code verification distinguished by drive series and which means the C2000 series requires only 1 EDS file.

09-60 Communication Card Identification

Default: Read only

Settings 0: No communication card
1: DeviceNet Slave
2: Profibus-DP Slave
3: CANopen Slave / Master
4: Modbus-TCP Slave
5: EtherNet / IP Slave
6: EtherCAT (applied to 230V / 460V models)
12: PROFINET (applied to 230V / 460V models)

09-61 Firmware Version of Communication Card

Default: Read only

Settings Read only

09-62 Product Code

Default: Read only

Settings Read only

09-63 Error Code

Default: Read only

Settings Read only

09-70 Communication Card Address (for DeviceNet and PROFIBUS)

Default: 1

Settings DeviceNet: 0–63
Profibus-DP: 1–125

09-71 Communication Card Speed Setting (for DeviceNet)

Default: 2

Settings Standard DeviceNet:
0: 125 Kbps
1: 250 Kbps
2: 500 Kbps
3: 1 Mbps (Delta only)
Non-standard DeviceNet: (Delta only)
0: 10 Kbps
1: 20 Kbps
2: 50 Kbps
3: 100 Kbps
4: 125 Kbps
5: 250 Kbps
6: 500 Kbps
7: 800 Kbps
8: 1 Mbps

09-72 Additional Settings for Communication Card Speed (for DeviceNet)

Default: 0

Settings 0: Standard DeviceNet
In this mode, the baud rate can only be 125 Kbps, 250 Kbps, 500 Kbps in standard DeviceNet speed.
1: Non-standard DeviceNet
In this mode, the DeviceNet baud rate can be same as that for CANopen (0–8).

Use this parameter with Pr.09-71.

- 0: The baud rate can only be set to 125 Kbps, 250 Kbps and 500 Kbps as a standard DeviceNet speed.
- 1: The DeviceNet communication rate can be the same as that for CANopen (setting 0–8).

09-75	Communication Card IP Configuration (for Modbus TCP)

Default: 0

Settings 0: Static IP
1: Dynamic IP (DHCP)

- 0: Set the IP address manually.
- 1: IP address is dynamically set by the host controller.

09-76	Communication Card IP Address 1 (for Modbus TCP)
09-77	Communication Card IP Address 2 (for Modbus TCP)
09-78	Communication Card IP Address 3 (for Modbus TCP)
09-79	Communication Card IP Address 4 (for Modbus TCP)

Default: 0

Settings 0–65535

- Use Pr.09-76–09-79 with a communication card.

09-80	Communication Card Address Mask 1 (for Modbus TCP)
09-81	Communication Card Address Mask 2 (for Modbus TCP)
09-82	Communication Card Address Mask 3 (for Modbus TCP)
09-83	Communication Card Address Mask 4 (for Modbus TCP)

Default: 0

Settings 0–65535

09-84	Communication Card Gateway Address 1 (for Modbus TCP)
09-85	Communication Card Gateway Address 2 (for Modbus TCP)
09-86	Communication Card Gateway Address 3 (for Modbus TCP)
09-87	Communication Card Gateway Address 4 (for Modbus TCP)

Default: 0

Settings 0–65535

09-88	Communication Card Password (Low word) (for Modbus TCP)
09-89	Communication Card Password (High word) (for Modbus TCP)

Default: 0

Settings 0–99

09-90	Reset Communication Card (for Modbus TCP)

Default: 0

Settings 0: Disable
1: Reset to defaults

09-91 Additional Settings for the Communication Card (for Modbus TCP)

Default: 1

Settings bit0: Enable IP Filter

bit1: Enable internet parameters (1bit)

When the IP address is set, this bit is enabled. After updating the parameters for the communication card, this bit changes to disabled.

bit2: Enable login password (1bit)

When you enter the login password, this bit is enabled. After updating the communication card parameters, this bit changes to disable.

09-92 Communication Card Status (for Modbus TCP)

Default: 0

Settings bit0: Enable password

When the communication card is set with a password, this bit is enabled. When the password is cleared, this bit is disabled.

10 Speed Feedback Control Parameters

✓ You can set this parameter during operation.

In this parameter group, ASR is the abbreviation for Adjust Speed Regulator and PG is the abbreviation for Pulse Generator.

10-00 Encoder Type Selection

Default: 0

Settings 0: Disabled
1: ABZ
2: ABZ (Delta encoder for Delta permanent magnet synchronous AC motor)
3: Resolver
4: ABZ / UVW
5: MI8 single-phase pulse input
6: Sin / Cos absolute (A / B, C / D, R)
7: Sin / Cos incremental (A / B, R)

- When using PG extension card EMC-PG01L or EMC-PG01O, set Pr.10-00=1. These expansion cards are applicable for induction motor (IM) only.
- When using EMC-PG01U, set Pr.10-00=2 (Delta encoder), and make sure SW1 is switched to D (Delta type). If the setting for Pr.10-00, Pr.10-01 and Pr.10-02 has changed, please turn off the drive's power and reboot to prevent permanent magnetic motor (PM) stall. This mode is recommended to use for PM.
- When using EMC-PG01U, set Pr.10-00=4 (Standard ABZ/UVW Encoder), and make sure SW1 is switched to S (Standard Type). This mode is applicable for both IM and PM.
- When using EMC-PG01R, set Pr.10-00=3, and set Pr.10-01 to 1024 ppr, then set Pr.10-30 after verifying the pole numbers of the resolver.
- When using MI8 single-phase pulse input as frequency command, the Pr.10-02 must set to "5: Single-phase input". The drive calculates the MI8 single-phase pulse input speed when the control modes are VF, VFPG, SVC, IM/PM FOC Sensorless and IM/PM TQC Sensorless. If you use the MI8 single-phase pulse input for speed feedback in closed-loop control, you can only use it in VFPG closed-loop control mode.
- When Pr.10-00=6 or 7, the encoder input type setting (Pr.10-02) can only be1 or 2.

10-01 Encoder Pulses per Revolution

Default: 600

Settings 1–20000

- This parameter sets the encoder pulses per revolution (ppr). It is a feedback control signal source when using PG. The encoder sets the number of pulses for the motor rotating through one rotation. The A/B phase cycle generates the pulse number.
- This setting is also the encoder resolution. The speed control is more accurate with higher resolution.

If you set this parameter incorrectly, it may cause motor stall, drive over-current, or a permanent magnetic pole origin detection error for the PM in closed-loop control. When using the PM, you must perform the magnetic pole origin detection (Pr.05-00 = 4) again if you modify the content of this parameter.

10-02 Encoder Input Type Setting

Default: 0

Settings 0: Disable

1: A / B phase pulse input, run forward if the A-phase leads the B-phase by 90 degrees.

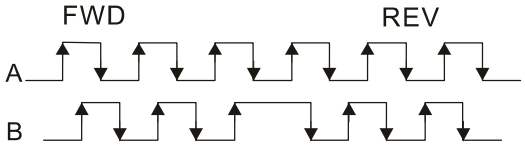

2: A / B phase pulse input, run forward if the B-phase leads the A-phase by 90 degrees.

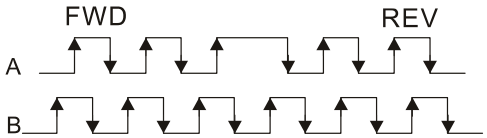

3: A-phase is a pulse input and B-phase is a direction input (L = reverse direction, H = forward direction).

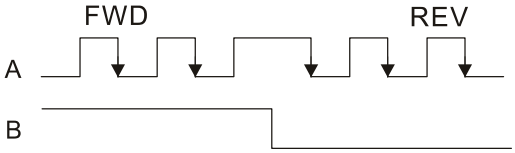

4: A-phase is a pulse input and B-phase is a direction input (L = forward direction, H = reverse direction).

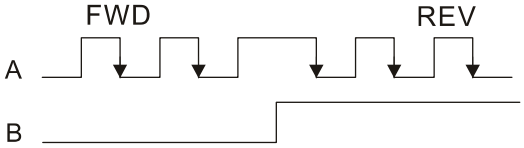

5: Single-phase input

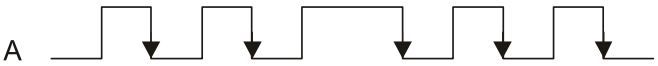

Position control: the PG2 pulse affects the PG1 pulse tracking position.

1. When PG2 is single-pulse, and PG1 is A / B phase pulse, the frequency of position control should be (input pps × 2) / (PG1 ppr × 4) at constant speed.
2. When PG2 and PG1 are either single-pulse (or both A / B phase pulse), the frequency of position control should be (input pps × 2) / (PG1 ppr × 2) at constant speed.
3. Due to the edge trigger of the pulse input, the input of A / B phase pulse should be read as 4 times of the frequency; and the single-phase input should be read as twice of the frequency. For inputs with the same pps, the single-phase tracking frequency will be half of the double-phase frequency.

Velocity control: PG2 acts according to the setting for Pr.10-01 (PG1 ppr), and will not be affected by PG1 pulse (single-phase input or A / B phase pulse). When the setting for Pr.10-00, Pr.10-01 and Pr.10-02 are changed, cycle the power of the motor drive.

1. The speed formula is (input ppr) / (PG1 ppr), when PG1 ppt = 2500, PG2 is single-phase input, and the input pps is 1000 (1000 pulse per second), the speed should be (1000 / 2500) = 0.40 Hz.
2. The same pps inputs of A/B phase pulse or single-phase pulse input should get the same frequency command.

10-03 Frequency Division Output Setting (Denominator)

Default: 1

Settings 1–255

Sets the denominator for the frequency division of the PG card feedback and output. When you set it to 2 with feedback 1024 ppr, PG OUT (pulse output) of PG card is 1024 / 2 = 512 ppr.

10-04 Mechanical Gear at Load Side A1
10-05 Mechanical Gear at Motor Side B1
10-06 Mechanical Gear at Load Side A2
10-07 Mechanical Gear at Motor Side B2

Default: 100

Settings 1–65535

Use Pr.10-04–Pr.10-07 with the multi-function input terminal setting 48 to switch to Pr.10-04–Pr.10-05 or Pr.10-06–Pr.10-07, as shown in the diagram below.

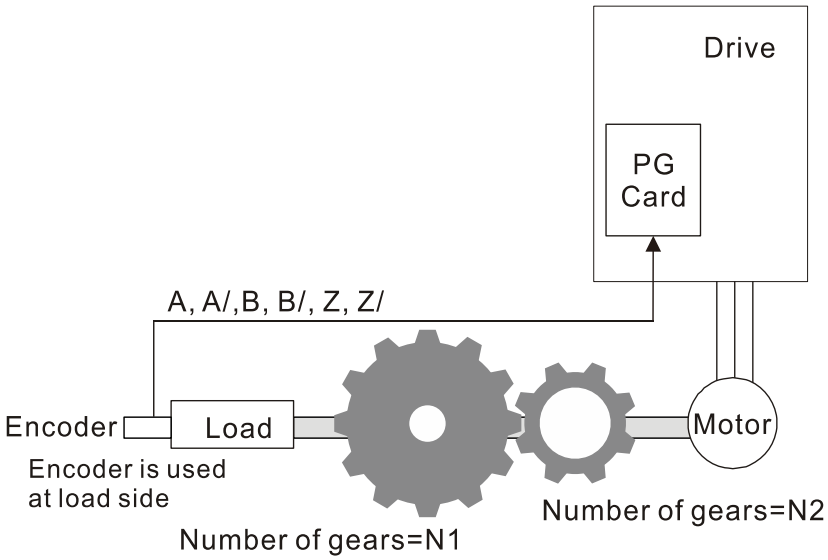

Gear ratio: $\frac{N1}{N2} = \frac{A1}{B1}$ or $\frac{A2}{B2}$ MIx=48 ON= $\frac{A2}{B2}$ OFF= $\frac{A1}{B1}$

A1 = Mechanical Gear A1 at Load Side (Pr.10-04)
B1 = Mechanical Gear B1 at Motor Side (Pr.10-05)
A2 = Mechanical Gear A2 at Load Side (Pr.10-06)
B2 = Mechanical Gear B2 at Motor Side (Pr.10-07)

📖 When using the single-point positioning function, consider the mechanical gear ratio and encoder installation positions (use semi-closed loop control method when the encoder is installed at the motor side or load side; use fully-closed loop control method when the encoder is installed at the motor side and the Z-phase signal comes from the load side)

1. **Semi-closed loop control method: Type A** (Encoder is installed at the motor side)
   Since the encoder is installed at the motor side, the drive can only realize the motor placement, not the actual load placement. In this case, motor placement is regarded as load placement. Thus, the mechanical gear ratio is 1:1

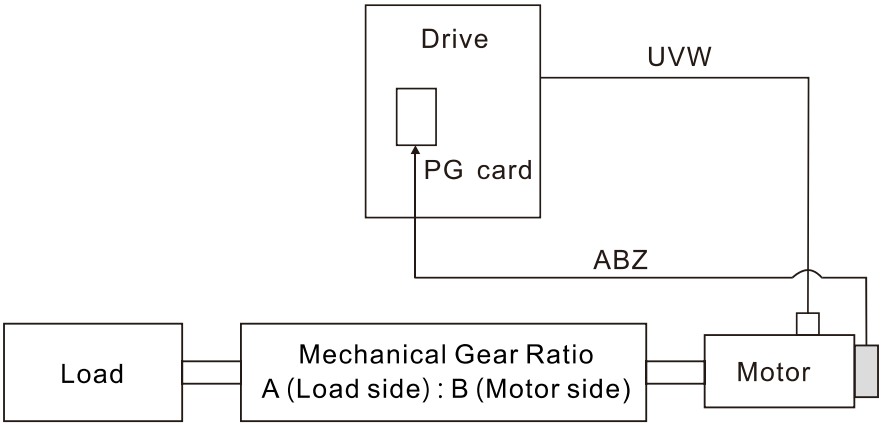

2. **Semi-closed loop control method: Type B** (Encoder is installed at the load side)
   Since the encoder is installed at the load side, the drive can only realize the actual load position movement, not the motor position movement. In this case, you must set the mechanical gear ratio to convert the load position movement to motor position movement

📖 A mechanical gear ratio error may occur if you use this control method. It is not recommended to use this method because it has a poorer performance in motor driving.

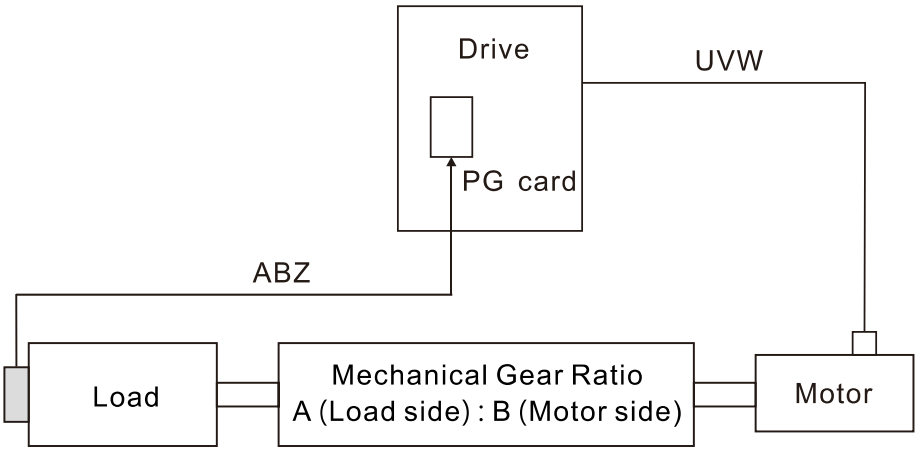

3. **Fully-closed loop control method: Type A** (Encoder is installed at the motor side, and Z-phase signal comes from the load side)
   The encoder is installed at the motor side, and the Z-phase signal comes from the load side, so the drive can realize both the motor position movement and actual load position movement. However, because there is only Z-phase signal for the actual position movement, set Pr.11-62 / Pr.11-63 (PPR Number at Load Side High/Low Byte).

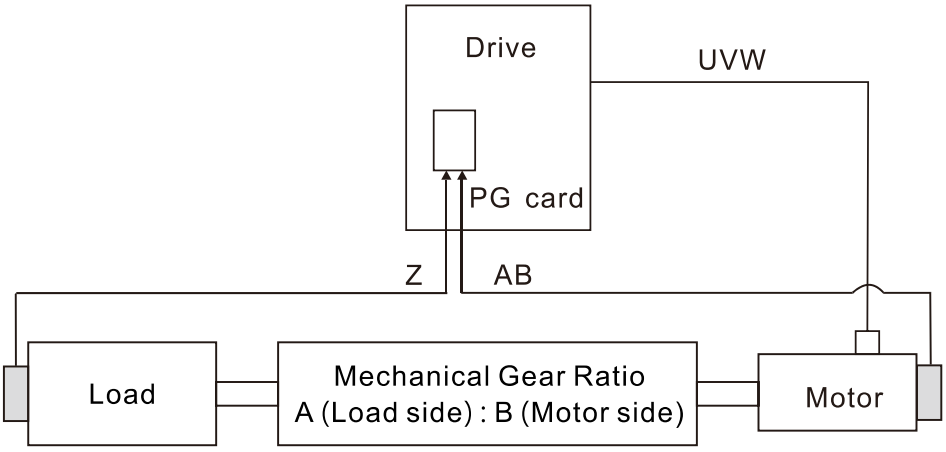

📖 Example 1:
When the encoder is installed at the load side, Pr.10-04=204 (Mechanical Gear A1 at Load Side), and Pr.10-05=34 (Mechanical Gear B1 at Motor Side), then the mechanical gear ratio is A1:B1=204:34=6:1. In this case, set the frequency command =2 Hz, then motor's actual frequency is 12 Hz, and the frequency at the load side is 2 Hz.

📖 Example 2:
Set the encoder PPR=1024, Pr.10-04=20, and Pr.10-05=40. The motor's one revolution is equal to the load's two revolutions after setting the mechanical gear ratio (frequency at the motor side=20 Hz; frequency at the load side=400 Hz).
In this case, if the required speed at the load side is 12000 rpm, and speed at the motor side should be 6000 rpm, then the pulse-train command given by the controller is 102400 pulse/sec. [= (1024*6000) / 60 = 102400].

📖 If you set the mechanical gear ratio incorrectly, overshot may occur.

📖 This function is only valid for single-point positioning.

10-08 Treatment for Encoder / Speed Observer Feedback Fault

Default: 2

Settings 0: Warn and continue operation
1: Fault and ramp to stop
2: Fault and coast to stop

10-09 Detection Time of Encoder / Speed Observer Feedback Fault

Default: 1.0

Settings 0.0–10.0 sec.
0: Disable

📖 When there is an encoder loss, an encoder signal error, a pulse signal setting error or a signal error, if the duration exceeds the detection time for the encoder feedback fault (Pr.10-09), the

encoder signal error occurs. Refer to Pr.10-08 for encoder feedback fault treatment.

📖 When the speed controller signal is abnormal or the direction of operation and speed observer are different , if time exceeds the detection time for the encoder feedback fault (Pr.10-09), reverse direction of the speed feedback fault (SdRv, fault no. 68) occurs. Refer to chapter 14 for the troubleshooting.

10-10 Encoder / Speed Observer Stall Level

Default: 115

Settings 0–120%
0: Disable

📖 Determines the maximum encoder feedback signal allowed before a fault occurs. The maximum operation frequency for Pr.01-00 = 100%

10-11 Detection Time of Encoder / Speed Observer Stall

Default: 0.1

Settings 0.0–2.0 sec.

10-12 Encoder / Speed Observer Stall Action

Default: 2

Settings 0: Warn and continue operation
1: Fault and ramp to stop
2: Fault and coast to stop

📖 When the drive output frequency exceeds the encoder / speed observer stall level (Pr.10-10). and the error time exceeds the speed observer stall detection time (Pr.10-11), the over speed rotation feedback fault (SdOr, fault no. 69) occurs. Refer to chapter 14 for the troubleshooting.

10-13 Encoder / Speed Observer Slip Range

Default: 50

Settings 0–50%
0: Disable

10-14 Detection Time of Encoder/ Speed Observer Slip

Default: 0.5

Settings 0.0–10.0 sec.

10-15 Encoder / Speed Observer Stall and Slip Error Action

Default: 2

Settings 0: Warn and continue operation
1: Fault and ramp to stop
2: Fault and coast to stop

📖 This parameter acts on the settings for Pr.10-13–Pr.10-15:

📖 When the value of (rotation speed – motor frequency) exceeds the Pr.10-13 setting, and the detection time exceeds Pr.10-14; the drive starts to count the time. If the detection time exceeds Pr.10-14, the encoder feedback signal error occurs. Refer to Pr.10-15 for the encoder stall and slip error treatment.

10-16 Pulse Input Type Setting

Default: 0

Settings 0: Disable

1: A / B phase pulse input, run forward if A-phase leads B-phase by 90 degrees.

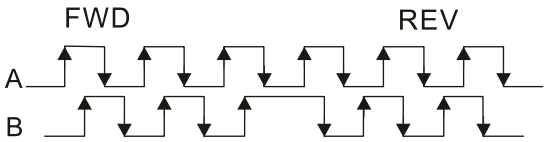

2: A / B phase pulse input, run forward if B-phase leads A-phase by 90 degrees.

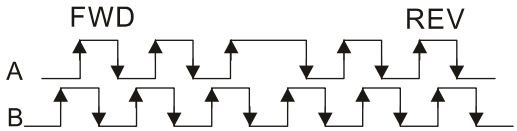

3: A-phase is a pulse input and B-phase is a direction input (L = reverse direction, H = forward direction).

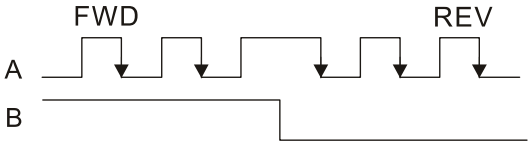

4: A-phase is a pulse input and B-phase is a direction input (L = forward direction, H = reverse direction).

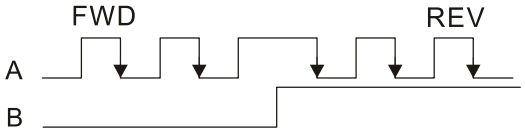

5: MI8 single-phase pulse input (applied to 230V / 460V models)

- When this setting is different from the Pr.10-02 setting and the source of the frequency command is pulse input (Pr.00-20 set to 4 or 5), it causes a four-time frequency problem .
  Example:
  Assume that Pr.10-01=1024, Pr.10-02=1, Pr.10-16=3, Pr.00-20=5, MIx = 37 and ON, then the pulse needed to rotate the motor one revolution is 4096 (1024×4).
- Assume that Pr.10-01=1024, Pr.10-02=1, Pr.10-16=1, Pr.00-20=5, MIx = 37 and ON, the pulse needed to rotate the motor one revolution is 1024 (1024×1).
- Setting procedure of MI8 single-phase pulse input:
  Pr.00-20=4, Pr.10-01 set as the ppr number of each rotation.
  Pr.10-16=5, MI8 single-phase pulse input
- MI8 input and PG2 input could both exist at the same time. But PG card Pr.10-00 and Pr.10-16 cannot be set as MI8 at the same time.

10-17 Electrical Gear A

10-18 Electrical Gear B

Default: 100

Settings 1–65535

- The electrical gear ratio is a ratio of the controller to the drive for the motor PPR (Pulses Per Revolution). For example, if the motor PPR of the controller is 10000, and the motor PPR of the drive is 1024, then the electrical gear ratio for the PG card input is 1024/10000, and the electrical gear ratio for the PG card output is 10000/1024.
- Rotation speed=pulse frequency/encoder pulses (Pr.10-01) × Electrical Gear A / Electrical Gear B
- You can set the revolution easily using the electrical gear. When the encoder's resolution is 1024, it means that the motor PPR is 1024. If the electrical gear ratio is 1, the motor encoder PPR is 1024. If the electrical gear ratio is 0.5, the corresponding motor PPR is 1 for every two pulse-train commands.
- If you set the electrical gear ratio incorrectly, overshot may occur.
- Example:
  - Turn the screw with one revolution=51.2 mm,
  - Set Pr.10-01 (Encoder PPR)=1024,
  - Set Pr.10-17 (Electrical gear A)=1024,
  - Set Pr.10-18 (Electrical gear B)=500 (hand wheel specification = 500 PPR),
  - Set Pr.10-04 (Mechanical Gear A1 at Load Side)=20,
  - Pr.10-05 (Mechanical Gear B1 at Motor Side)=40.
  - Then, after setting the electrical gear ratio and mechanical gear ratio, hand wheel's one revolution is equal to the motor’s one revolution, and is equal to the load’s two revolutions.
  - In this case, 1 revolution at the load side = 51.2 mm = 1/2 revolution at the motor side = 512 [1024/2] pulses = 1/2 revolution of the hand wheel = 250 [500/2] pulses. Thus, it can be referred that 1 pulse command movement = 51.2 mm / 512 pulses = 0.1 mm/pulse or 1 mm movement for 10 pulses.
  - If the screw moves 1.024 meters, the required number of pulse-train commands are:
    Load side:
    1.024 meters = 102.4 cm = 1024 mm
    1024 mm / 51.2 mm = 20 revolutions
    20 revolutions at the load side = 10 revolutions at the motor side
    1024 pulses × 10 revolutions = 10240 pulses
    As a result, the number of pulse-train commands provided by the controller is 10240 pulses or 10 revolutions for the hand wheel.

10-21 PG2 Pulse Input Speed Command Low Pass Filter Time

Default: 0.100

Settings 0.000–65.535 sec.

- When you set Pr.00-20 to 5 and the multi-function input terminal to 37 (OFF), the system treats the pulse command as a Frequency command. Use this parameter to suppress the speed command jump.

10-24 FOC & TQC Function Control

Default: 0

Settings bit0: ASR controller under torque control
(0: use PI as ASR; 1: use P as ASR)
bit11: Activates the DC brake when executing the zero torque command
(0: ON; 1: OFF)
bit12: FOC Sensorless mode with crossing zero means the speed goes from negative to positive or positive to negative
(0: determined by the stator frequency; 1: determined by the speed command)
bit15: Direction control in open-loop torque
(0: Switch ON direction control; 1: Switch OFF direction control)

Only bit = 0 is used for closed-loop; other bits are used for open-loop.

10-25 FOC Bandwidth for Speed Observer

Default: 40.0

Settings 20.0–100.0 Hz

Setting the speed observer to a higher bandwidth could shorten the speed response time but creates greater noise interference during the speed observation.

10-26 FOC Minimum Stator Frequency

Default: 2.0

Settings 0.0–10.0% fN

Sets the stator frequency lower limit in operation status. This setting ensures the stability and accuracy of observer and avoids interferences from voltage, current and motor parameters. fN is the motor rated frequency.

10-27 FOC Low Pass Filter Time Constant

Default: 50

Settings 1–1000 ms

Sets the low pass filter time constant of a flux observer at start-up. If you cannot activate the motor during high speed operation, lower the setting for this parameter.

10-28 FOC Gain of Excitation Current Rise Time

Default: 100

Settings 33–100%Tr (Tr: rotor time constant)

Sets the drive's excitation current rise time when it activates in open-loop torque mode. When the drive's activation time is too long in torque mode, adjust this parameter to a shorter time value. Tr is the rotor time constant.

10-29 Upper Limit of Frequency Deviation

Default: 20.00

Settings 0.00–200.00 Hz

Limits the maximum frequency deviation.

- If you set this parameter too high, an abnormal feedback malfunction occurs.
- If the application needs a higher setting for Pr.10-29, note that a higher setting results in larger motor slip, which causes a PG Error (PGF3, PGF4). In this case, you can set Pr.10-10 and Pr.10-13 to 0 to disable PGF3 and PGF4 detection, but you must make sure the PG wiring and application are correct; otherwise, it may lose the instant PG protection. Pr.10-29 setting too high is not commonly done.

10-30 Resolver Pole Pair

Default: 1

Settings 1–50

- To use the Pr.10-30 function, you must set Pr.10-00=3 (Resolver Encoder) first.

10-31 I/F Mode, Current Command

Default: 40

Settings 0–150% rated current of the motor

- Sets the current command for the drive in low speed area (low speed area: frequency command < Pr.10-39). When the motor stalls on heavy-duty start-up or forward/ reverse with load, increase the parameter value. If the inrush current is too high and causes oc stall, then decrease the parameter value.
- When Pr.00-11=8 (SynRM sensorless), the setting value becomes 15%, and the application extends to high-speed and flux-weakiening regions.
- When Pr.00-11=8 (SynRM sensorless) and the motor drive operates in flux-weakening region, you can adjust the parameter if the rotation speed is restricted and can not increase, causing the controller to lose control.

10-32 PM FOC Sensorless Speed Estimator Bandwidth (High Speed)

Default: 5.00

Settings 0.00–600.00 Hz

- Sets the speed estimator bandwidth. Adjust the parameter to change the stability and the accuracy of the motor speed.
- If there is low frequency vibration (the waveform is similar to sine wave) during the process, then increase the bandwidth. If there is high frequency vibration (the waveform shows extreme vibration and is like a spur), then decrease the bandwidth.

10-33 PM FOC Sensorless Speed Estimator Bandwidth (Low Speed)

Default: 1.00

Settings 0.00–600.00 Hz

- This parameter is only valid in SynRM sensorless (Pr.00-11=8) speed mode.
- Increase the setting value improves the loading performance during the start-up and low-speed operation.
- When the motor starts or the rotation speed is lower than I/F switching frequency point (Pr.10-39), you can adjust the parameter if the motor speed has oscillation.
- If Pr.05-33=3 (SynRM), then the unit becmes Pu, and the setting range becomes to 0.01–3.00, the default becomes to 1.00.

10-34 PM Sensorless Speed Estimator Low-pass Filter Gain

Default: 1.00

Settings 0.00–655.35

- Changes the response speed of the speed estimator.
- If there is low frequency vibration (the waveform is similar to the sine wave) during the process, then increase the gain. If there is high frequency vibration (the waveform shows extreme vibration and is like a spur), then decrease the gain.
- If Pr.05-33=3 (SynRM), then the upper limit becomes 10.00.

10-35 ARM (Kp) Gain

Default: 1.00

Settings 0.00–3.00

- If Pr.00-11=8 (SynRM sensorless), then the default becomes 0.40.

10-36 ARM (Ki) Gain

Default: 0.20

Settings 0.00–3.00

- Active Magnetic Regulator Kp / Ki, affects the response of magnetic regulation in the low magnetic area.
- If entering the low magnetic area and the input voltage (or DC bus) plummets (e.g. an unstable power net causes instant insufficient voltage, or a sudden load that makes DC bus drop), which causes the ACR diverge and oc, then increase the gain. If the Id value of a spur creates large noise in high-frequency output current, decrease the gain to reduce the noise. Decrease the gain will slow down the response.
- If Pr.00-11=8 (SynRM sensorless), then the default becomes 2.00.

10-37 PM Sensorless Control Word

Default: 0000h

Settings 0000–FFFFh

bit No.	Function	Description
2	Choose a control mode to start.	0: Start in IF mode 1: Start in VF mode
3	Choose a mode to stop.	0: Stop in IF mode 1: Stop in VF mode
5	Choose a control mode to stop	0: When lower than Pr.10-40, coast to stop 1: When lower than Pr.10-40, ramp to stop

10-39 Frequency to Switch from I/F Mode to PM Sensorless Mode / Frequency to Switch from IMVF Mode to IMFOCPG Mode when Pr.11-00 bit11=1 in IMFOCPG Mode

Default: 20.00 / 20.00

Settings 0.00–599.00 Hz / 0.00–599.00 Hz

- Sets the frequency for switching from low frequency to high frequency, and sets the switch point for high and low frequencies of the speed observer.

- If the switch frequency is too low, the motor does not generate enough back-EMF to let the speed oberver measure the right position and speed of the rotor, causing stall and oc when running at the switch frequency.
- If the switch frequency is too high, the active range of I/F is too wide, which generates a larger current without energy saving. (If the current value for Pr.10-31 is too high, the high switch frequency makes the drive continue to output with Pr.10-31 setting value.)
- If Pr.00-11=8 (SynRM sensorless), then the default becomes 10.00 Hz.
- When Pr.11-00 bit11=1, Pr.10-39 is the frequency for switching from IMVF to IMFOCPG control modes.

10-40 Frequency to Switch from PM Sensorless Mode to I/F Mode / Frequency to Switch from IMFOCPG Mode to IMVF Mode when Pr.11-00 bit11=1 in IMFOCPG Mode

Default: 20.00 / 40.00

Settings 0.00–599.00 Hz / 30.00–599.00 Hz

- Sets the frequency for switching from high frequency to low frequency, and sets the switch poing for high and low frequencies of the speed observer.
- If the switch frequency is too low, the motor does not generate enough back-EMF to let the speed observer measure the right position and speed of the rotor when running at the switch frequency.
- If the switch frequency is too high, the active range of I/F is too wide, which generates a larger current without energy saving. (If the current value for Pr.10-31 is too high, the high switch frequency makes the drive continue to output with Pr.10-31 setting value).
- When Pr.11-00 bit11=1, Pr.10-40 is the frequency for switching from IMFOCPG to IMVF control modes.

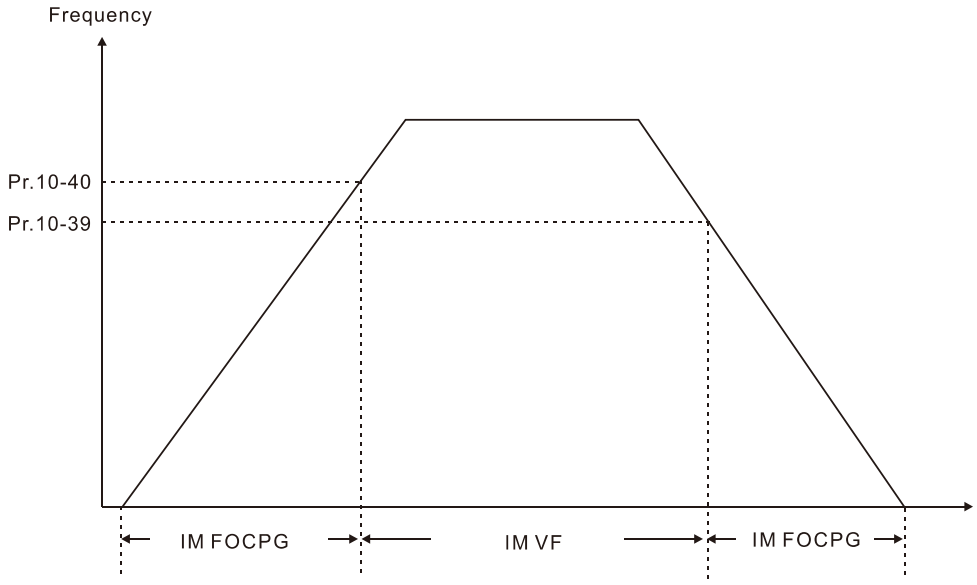

- When Pr.11-00 bit11=1, the default value for Pr.10-40 = Pr.10-39 + 20 Hz.
- When Pr.11-00 bit11=1, Pr.10-40 cannot be lower than [Pr.10-39 + 10 Hz].
  For example, if Pr.10-39 = 400 Hz, the minimum setting value allowed for Pr.10-40 is 410 Hz.
- Make sure that you have set Pr.10-39 before setting Pr.10-40 and Pr.10-40 must be larger than Pr.10-39. For applications that require shorter acceleration and deceleration time, it is recommended to set Pr.10-40 15 Hz larger than Pr.10-39.

- Pr.10-40 automatically changes with Pr.10-39 setting value, that is, Pr.10-40 = [Pr.10-39 + 20 Hz]. For example, if Pr.10-39=300 Hz, and Pr.10-40=310 Hz, then
  Pr.10-40 automatically changes to 420 Hz when Pr.10-39 changes to 400 Hz;
  Pr.10-40 automatically changes to 320 Hz when Pr.10-39 changes to 300 Hz.
- When using Pr.10-39 and Pr.10-40 as the frequency for switching between IMFOCPG and IMVF control mdoes, set Pr.10-39 and Pr.10-40 within the PG card bandwidth range (300 kHz). For example, if the encoder = 5000 ppr, the PG01L (ABZ) bandwidth = 300 kHz, and the induction motor with two-pole pairs runs in high-speed, then the setting value for Pr.10-40 is lower than 120 Hz [= (300 k / 5000 ppr) × two-pole pairs].

10-41 I/F Mode, Id Current Low Pass-Filter Time

Default: 0.2

Settings 0.0–6.0 sec.

- Sets the filter time for Pr.10-31. Smoothly increases the magnetic field to the current command setting value under the I/F mode.
- If you want to slowly increase the size of Id, increase the filter time to avoid a Step phenomenon occurs when starting current output. When decrease the filter time (minimum value is 0), the current rises faster, then a Step phenomenon occurs.

10-42 Initial Angle Detection Pulse Value

Default: 1.0

Settings 0.0–3.0

- The angle detection is fixed to 3: Use the pulse injection method to start. The parameter influences the value of the pulse during the angle detection. The larger the pulse, the higher the accuracy of rotator's position. A larger pulse might cause oc.
- Increase the parameter when the running direction and the command are opposite during start-up. If oc occurs at start-up, then decrease the parameter.
- Refer to Section 12-2 Adjustment & Application for detailed motor adjustment procedure.

10-43 PG Card Version

Default: Read only

Settings 0.00–655.35

- Corresponding version reference:

PG02U	21.XX
PG01U	31.XX
PG01O / PG01L	11.XX
PG02O / PG02L	14.XX
PG01R	41.XX

10-47 PG1 Pulse Imputation Scaling Factor

Default: 0

Settings 0: x1
1: x2
2: x4
3: x8

- Use Pr.10-47 to set interpolation magnification of the PG1 Sin/Cos signal. After the interpolation is finished, the encoder PPR (Pulses per Revolution) = Pr.10-01 × $2^{Pr.10-47}$. The larger the interpolation magnification, the more accurate the positioning.
- Example:
  When Pr.10-01=128 and Pr.10-47=0, PPR= 128 × 20 × 4 (four-time frequency) = 1024.
  When Pr.10-01=128 and Pr.10-47=3, PPR= 128 × 23 × 4 (four-time frequency) = 8192.

10-49 Zero Voltage Time during Start-up

Default: 00.000

Settings 00.000–60.000 sec.

- This parameter is valid only when the setting of Pr.07-12 (Speed Tracking during Start-up) = 0.
- When the motor is in static status at start-up, this increases the accuracy when estimating angles. In order to put the motor in static state, set the three-phase drive output to 0 V to the motor. The Pr.10-49 setting time is the length of time when three-phase output at 0 V.
- It is possible that even when you apply this parameter, the motor cannot go into the static state because of inertia or some external force. If the motor does not go into the static state in 0.2 seconds, increase this setting value appropriately.
- If Pr.10-49 is too high, the start-up time is longer. If it is too low, then the braking performance is weak.

10-50 Reverse Angle Limit (Electrical Angle)

Default: 10.00

Settings 0.00–30.00 degree

- When the drive is running forward, if a sudden reverse run occurs and the reverse angle exceeds the setting for Pr.10-50, then a ScRv error occurs.
- This parameter is valid only when the setting of Pr.07-28 =11 (enable textile machine).
- If the estimated tolerance of start-up angle detection is larger, and causes a reverse run of the motor, this parameter can limit the reverse angle.
- Decrease the parameter setting to prevent large reverse angle. If the tolerance is bigger, then increase the parameter setting. If the load is too large at this moment, it may cause oc.

10-51 Injection Frequency

Default: 500

Settings 0–1200 Hz

- This parameter is a high frequency injection command in IPM sensorless control mode and usually you do not need to adjust it. If a motor's rated frequency (for example, 400Hz) is too close to the frequency setting for this parameter (that is, the Default of 500Hz), it affects the accuracy of the angle detection. Refer to the setting for Pr.01-01 before you adjust this parameter.
- If the setting value for Pr.00-17 is lower than Pr.10-51 × 10, then increase the frequency of the carrier wave.
- Pr.10-51 is valid only when Pr.10-53=2.
- If Pr.00-11=8 (SynRM sensorless), then the default becomes 400 Hz.

10-52 Injection Magnitude

Default:
15.0/ 30.0/ 30.0/ 30.0

Settings 0.0–200.0V
230V models: 0.0–100.0 V
460V models: 0.0–200.0 V
575V models: 0.0–200.0 V
690V models: 0.0–200.0 V

- The parameter is the magnitude command for the high frequency injection signal in IPM Sensorless control mode.
- Increasing the parameter can increase the accuracy of the angle estimation, but the electromagnetic noise might be louder if the setting value is too high.
- The system uses this parameter when the motor's parameter is "Auto". This parameter influences the angle estimation accuracy.
- When the ratio of the salient pole (Lq/Ld) is lower, increase Pr.10-52 to make the angle detection more accurate.
- Pr.10-52 is valid only when Pr.10-53=2.
- If Pr.05-33=3 (SynRM), then the unit becomes %, and the setting range becomes 10–50, the default becomes 30.

10-53 PM Initial Rotor Position Detection Method

Default: 0

Settings 0: Disable
1: Force attracting the rotor to zero degrees
2: High frequency injection
3: Pulse injection

- When Pr.00-11=2 (PMSVC) or Pr.00-11=6 (PM Sensorless), for IPM, the setting value is suggested to be 2; for SPM, the setting value is suggested to be 3. You can choose the setting 1 if the result is not good of setting as 2 or 3.

10-54 Magnetic Flux Linkage Estimate Low-speed Gain

Default: 100

Settings 10–1000%

10-55 Magnetic Flux Linkage Estimate High-speed Gain

Default: 100

Settings 10–1000%

- Pr.10-54 is the magnetic linkage estimator gain in which the estimated speed is smaller than 1/5 of motor's rated speed.
- Pr.10-55 is the magnetic linkage estimator gain in which the estimated speed is equal to or larger than 1/5 of motor's rated speed.
- Both Pr.10-54 and Pr.10-55 are valid only when the control mode is PM Sensorless or SynRM Sensorless under speed mode (Pr.00-11=6 or 8).

- A larger Pr.10-54 setting value helps improve the load capacity at start-up.
- A larger Pr.10-55 setting value helps improve the load capacity in high-speed range and quicken the response to magnetic linkage estimator.
- If speed oscillation occurs in the flux-weakening region, set Pr.10-55 to a smaller value.
- If Pr.05-33=3 (SynRM), then the unit becomes Pu, the setting range becomes 0.1–3.0, and the default becomes 1.0.

10-56 Kp of Phase-locked Loop

Default: 100

Settings 10–1000%

- A larger Pr.10-56 setting value helps improve the load capacity in high-speed range and quicken the response to magnetic linkage estimator.
- Decrease the setting value when the speed output frequency has high-frequency oscillation.
- If Pr.05-33=3 (SynRM), then the unit becomes Hz, the setting range becomes 5–50, and the default becomes 30.

10-57 Ki of Phase-locked Loop

Default: 100

Settings 10–1000%

- A larger Pr.10-57 setting value helps improve the speed response during the acceleration / deceleration.

10-58 Mutual Inductance Gain Compensation

Default: 1.00

Settings 0.00–655.35

- This parameter is valid only when SynRM sensorless (Pr.00-11=8).
- Adjust Pr.10-58 setting value to improve the load capacity when the start-up performance of the motor is not good or the speed is slower than the setting of Pr.10-39.

11 Advanced Parameters

✎ You can set this parameter during operation.

In this parameter group, ASR stands for Adjust Speed Regulator.

11-00 System Control

Default: 0000h

Settings bit0: Auto-tuning for ASR
bit1: Inertia estimate (only in FOCPG mode)
bit2: Zero servo
bit6: 0Hz linear-cross (applied to 230V / 460V models)
bit7: Save or do not save the frequency
bit8: Maximum speed for point-to-point position control
bit11: Switch between IMFOCPG and IMVF modes
(see Pr.10-39 and Pr.10-40)

📖 bit0=0: Manual adjustment for ASR gain, Pr.11-06–Pr.11-11 are valid and Pr.11-03–Pr.11-05 are invalid.

bit0=1: Auto-adjustment for ASR gain, the system automatically generates an ASR setting, Pr.11-06–Pr.11-11 are invalid and Pr.11-03–Pr.11-05 are valid.

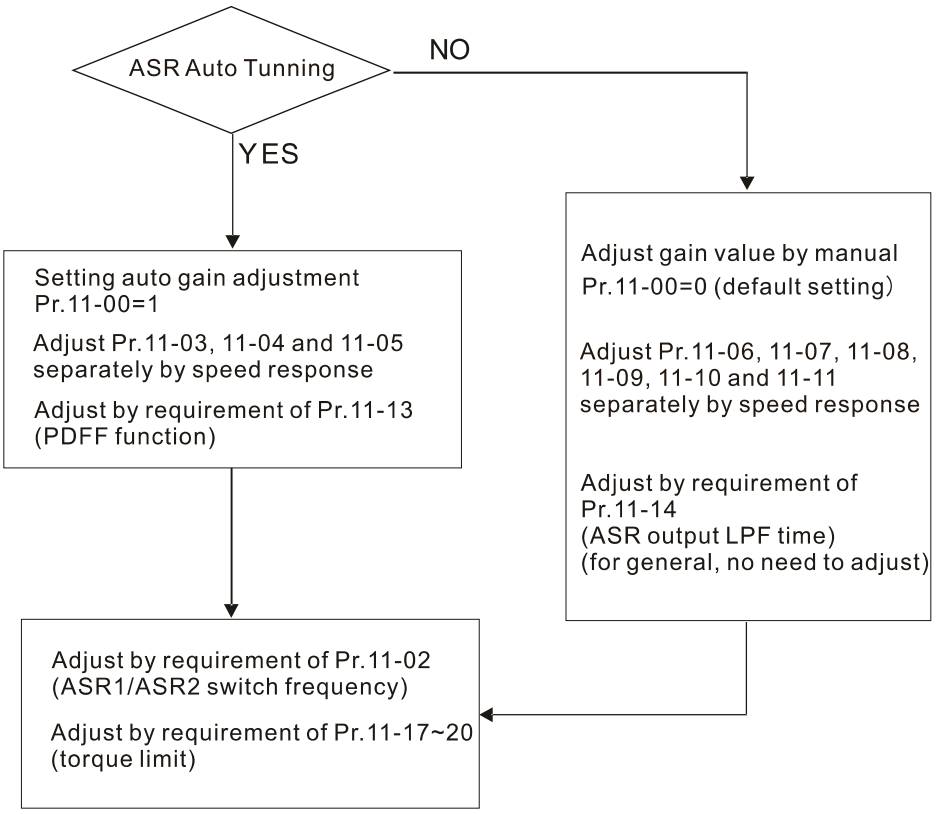

📖 When the drive needs to keep a certain torque at zero-speed, or it needs a steady frequency output at extreme low speed, increase Pr.11-05 zero-speed bandwidth appropriately. When the speed is in high-speed area, if the output current trembles seriously and makes the drive vibrate, then decrease the high-speed bandwidth.

For example:

Manual gain	Response: [Pr.11-10, Pr.11-11] > [Pr.11-06, Pr.11-07] > [Pr.11-08, Pr.11-09]
Auto gain	Pr.11-05 = 15 Hz, Pr.11-03 = 10 Hz, Pr.11-04 = 8 Hz

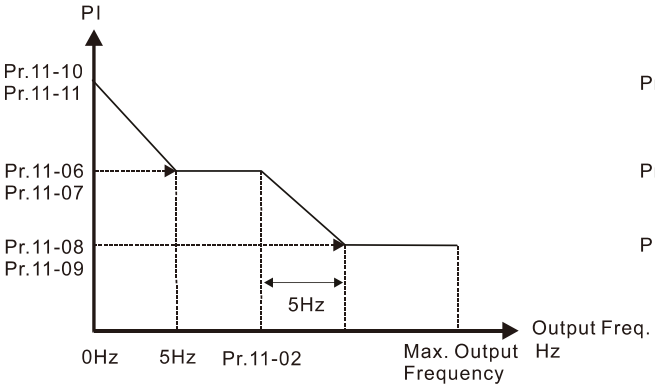

ASR adjustment- manual gain

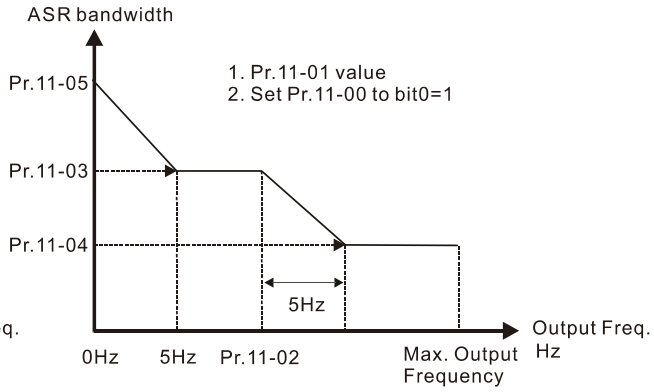

ASR adjustment- auto gain

📖 bit1=0: no function.

bit1=1: Inertia estimation function is enabled. bit1 setting would not activate the estimation process, set Pr.05-00=12 to begin FOC/TQC Sensorless inertia estimating.

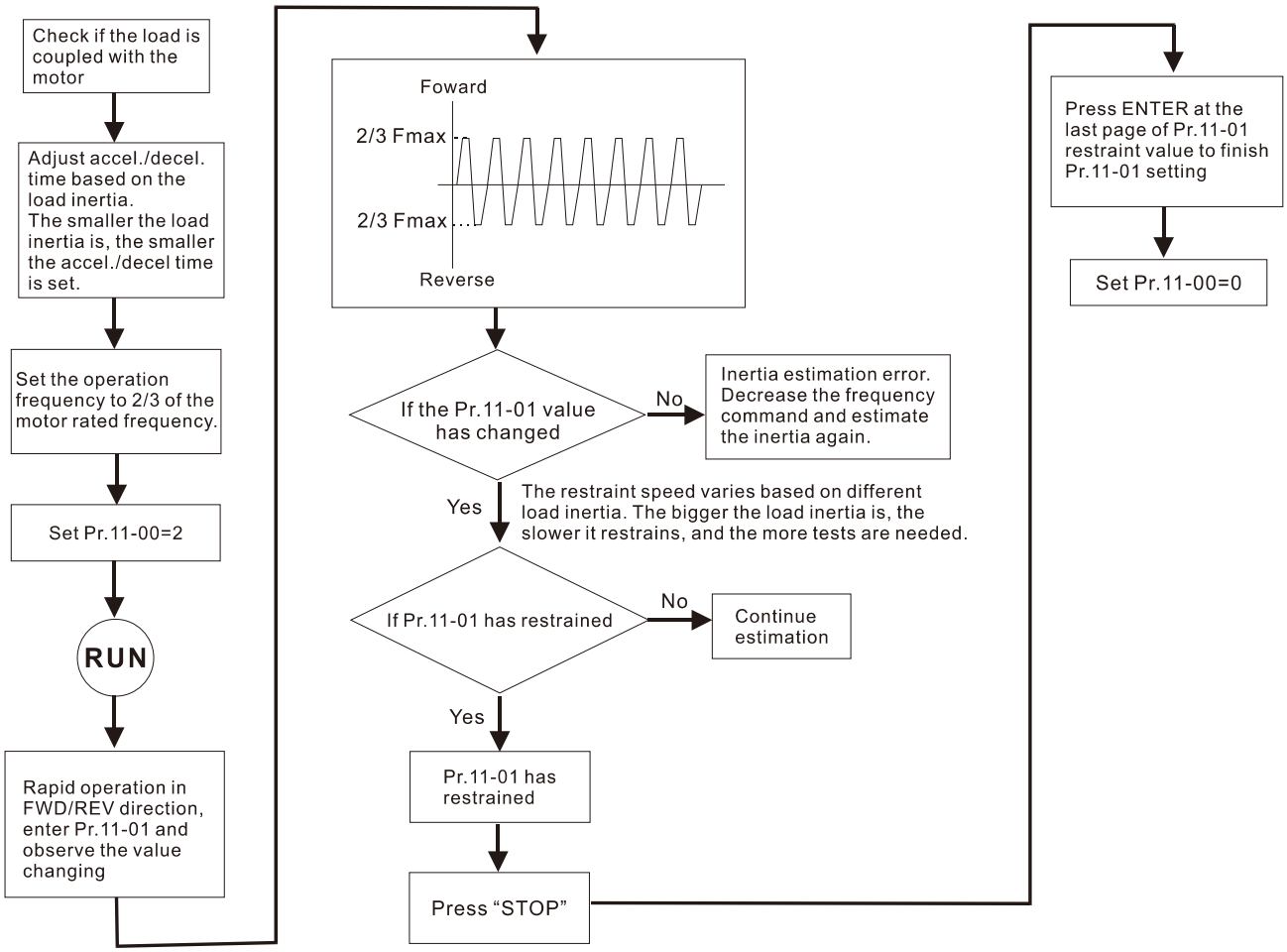

📖 bit2=0: no function.

bit2=1: when frequency command is less than Fmin (Pr.01-07), it will use the zero-servo function as position control.

- bit6 0Hz linear-cross function: keeps the S-Curve in linear-cross the 0Hz point when the S acceleration/ deceleration curves (Pr.01-24–Pr.01-27) are set, and the forward/ reverse run cross 0Hz.

  bit6=1: The S acceleration/ deceleration curves (Pr.01-24–Pr.01-27) do NOT affect the drive starts and stops. Forward / reverse rotation crosses the zero point in linear.

  bit6=0: The S acceleration / deceleration curves (Pr.01-24–Pr.01-27) affect the drive starts and stops. Forward / reverse rotation crosses the zero point after the S-Curve.

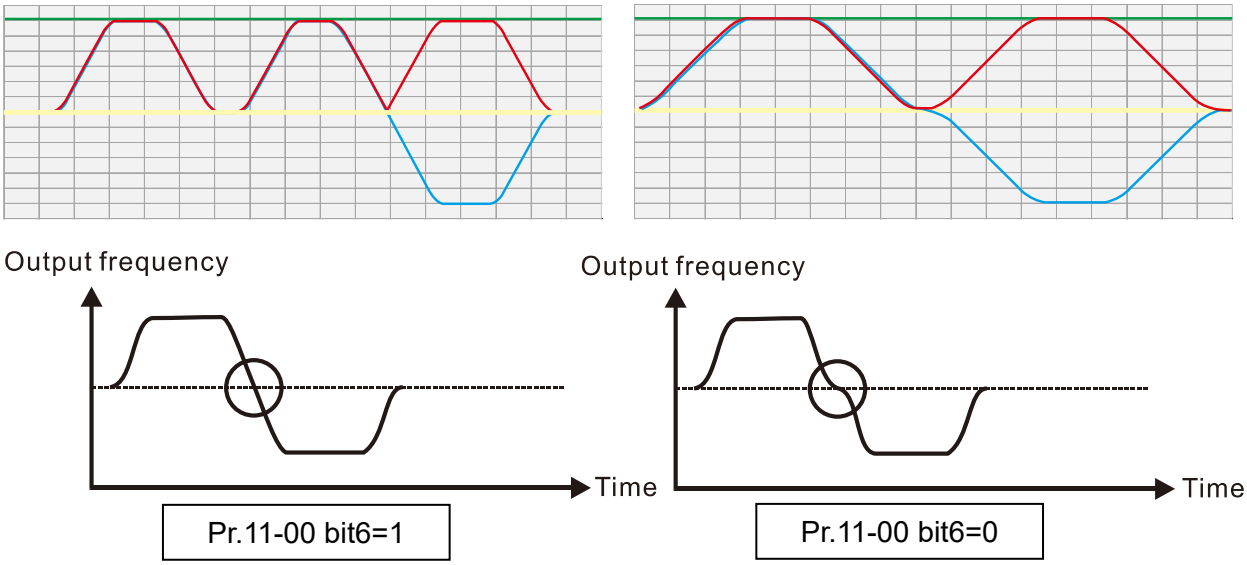

- bit 7=0: Save the frequency before power is OFF. When power is ON again, the saved frequency is displayed.

  bit7=1: Do not save the frequency before power is OFF. When power is ON again, 0.00 Hz is the displayed frequency.
- bit8=0: Pr.11-43 sets the maximum speed for point-to-point position control

  bit8=1: The external multi-speed terminal sets the maximum speed for point-to-point position control. When the external multi-speed terminal is 0, Pr.11-43 sets the maximum speed.
- bit11=1 (0800h): enable the mode-switching function: bit11=0: disable the mode-switching function.
- The function to switch between IMFOCPG and IMVF is only valid in IM FOCPG control mode.
- The mode-switching function of bit11 is applicable for the high-speed operation region of IMFOCPG or feedback of high ppr. If the speed of the motor is too fast and cause the feedback signal frequency to be higher than the hardware bandwidth of PG card, then you can use Pr.10-39 and Pr.10-40 to switch open-loop IMVF and close-loop IMFOCPG.

11-01 Per Unit of System Inertia

Default: 256

Settings 1–65535 (256=1PU)

- To get the system inertia per unit from Pr.11-01, you need to set Pr.11-00 to bit1 = 1 and execute continuous forward/reverse running.
- When Pr.11-01 = 256, it is 1PU. So if you use a 2HP motor, the 2HP motor inertia is 4.3 kg-cm^2 according to the table below. If Pr.11-01 = 10000 after tuning, the system inertia is (10000 / 256) x 4.3 kg-cm^2.

- Perform the operation test with load based on the inertia after tuning. Run the motor in acceleration, deceleration, and steady speed and observe the values. If values between speed feedback and speed command are close, steady-state error is small and overshoot is less, then this inertia is a better one.
- If the Iq current command from ASR has high-frequency glitch, then decrease the setting. If the response time of sudden loading is too slow, then increase the setting.
- When using torque mode as the control mode, perform the tuning with speed mode first to see if the tuned inertia can work normally. After verifying with speed mode, change the control mode to torque mode.

Unit of induction motor system inertia is kg-cm^2:

HP	kW	Setting	HP	kW	Setting	HP	kW	Setting
1	0.7	2.3	30	22	176.5	215	160	2800.0
2	1.5	4.3	40	30	202.5	250	186	3550.0
3	2.2	8.3	50	37	355.5	300	224	5139.0
5	3.7	14.8	60	45	410.8	375	279	5981.0
7	5.5	26.0	75	56	494.8	425	317	5981.0
10	7.5	35.8	100	75	1056.5	475	354	5981.0
15	11	74.3	120	89	1275.3	600	447	5981.0
20	15	95.3	150	112	1900.0	650	485	5981.0
25	18	142.8	175	130	2150.0	750	559	5981.0

The base value for induction motor system inertia is set by Pr.05-38 and the unit is in kg-cm^2.

11-02 ASR1 / ASR2 Switch Frequency

Default: 7.00

Settings 5.00–599.00Hz

- Sets the low-speed and high-speed ASR switching point in the FOC area. Provides flexibility to meet two needs: in the high-speed region of the estimator switch point it has a high response, and in the low-speed region of the estimator switch point it has a lower response. The recommended switching point is higher than Pr.10-39.
- A low setting does not cover Pr.10-39. If the setting is too high, the high-speed range is too narrow.
- If Pr.00-11=8 (SynRM sensorless), then the default becomes 10.00 Hz.

11-03 ASR1 Low-speed Bandwidth

Default: 10

Settings 1–40Hz (IM) / 1–100Hz (PM)

11-04 ASR2 High-speed Bandwidth

Default: 10

Settings 1–40Hz (IM) / 1–100Hz (PM)

11-05 Zero-speed Bandwidth

Default: 10

Settings 1–40Hz (IM) / 1–100Hz (PM)

- After estimating inertia and setting Pr.11-00 bit0=1 (auto-tuning), you can adjust Pr.11-03, Pr.11-04 and Pr.11-05 separately by speed response. The larger the setting value, the faster the response. Pr.11-02 is the switch frequency between the low-speed / high-speed bandwidth.

If Pr.00-11=8 (SynRM sensorless), then the upper limit value becomes 30, and the default becomes 5.

11-06 ASR 1 Gain

Default: 10

Settings 0–40 Hz (IM) / 1–100 Hz (PM)

11-07 ASR 1 Integral Time

Default: 0.100

Settings 0.000–10.000 sec.

11-08 ASR 2 Gain

Default: 10

Settings 0–40 Hz (IM) / 0–100 Hz (PM)

11-09 ASR 2 Integral Time

Default: 0.100

Settings 0.000–10.000 sec.

11-10 ASR Gain of Zero Speed

Default: 10

Settings 0–40 Hz (IM) / 0–100 Hz (PM)

11-11 ASR Integral Time of Zero Speed

Default: 0.100

Settings 0.000–10.000 sec.

11-12 ASR Speed Feed Forward Gain

Default: 0

Settings 0–150%

This function enables when Pr.11-00 bit0 = 1.

Increase the setting for Pr.11-12 to reduce the command tracking difference, and improve the speed response. Use this function for speed tracking applications.

Set Pr.11-01 correctly to get excellent improvement of the speed response.

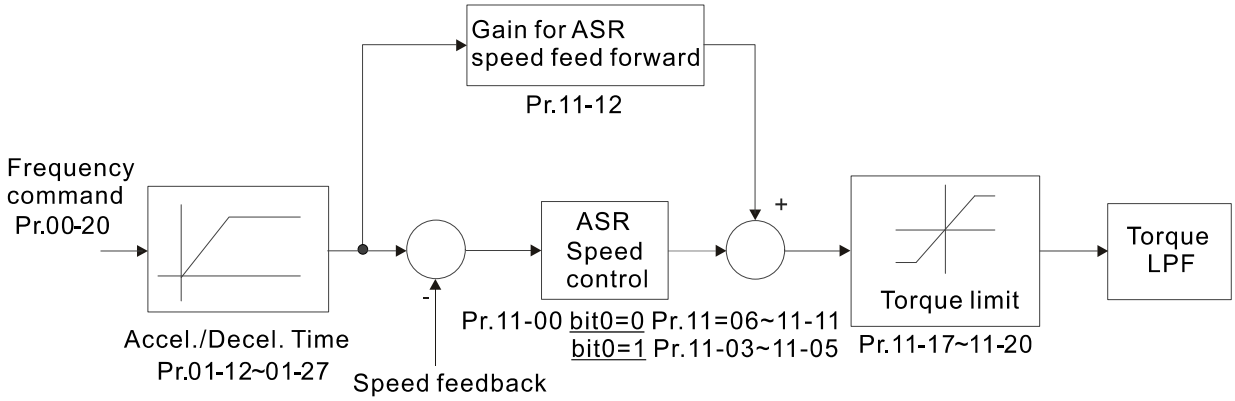

11-13 PDFF Gain Value

Default: 30

Settings 0–200%

- This parameter is invalid when Pr.05-24 = 1.
- This parameter is valid only when Pr.11-00 bit0 = 1.
- After you estimate and set Pr.11-00 bit0=1 (auto-tuning), use Pr.11-13 to reduce overshoot. However, a shift of the curve may occur earlier. In this case, you can set Pr.11-13 = 0 first, and then increase the setting value to "a condition with best acceleration and without overshoot" when the acceleration time meets your application but overshoot occurs.
- Increasing Pr.11-13 improves the overshoot of speed tracking, but an excessive value may reduce the transient response.
- Increasing Pr.11-13 enhances the system stiffness in high-speed steady state, and reduce the speed transient fluctuation at a sudden loading.
- Ensure that you set Pr.11-01 system inertia correctly to get excellent improvement of the speed response.

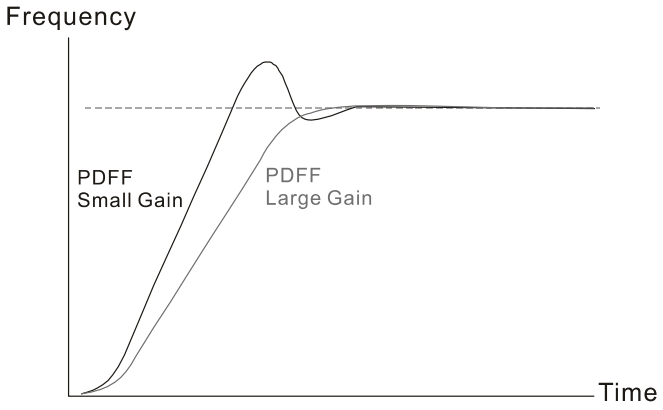

11-14 ASR Output Low Pass Filter Time

Default: 0.008

Settings 0.000–0.350 sec.

- Sets the ASR command filter time.

11-15 Notch Filter Depth

Default: 0

Settings 0–100 dB

11-16 Notch Filter Frequency

Default: 0.00

Settings 0.0–6000.0 Hz

11-47 Notch Filter Bandwidth

Default: 0

Settings 0–1000 Hz

- A notch filter is a filter that attenuates a signal in a specific frequency band.
- The notch filter also slows down the response speed in the frequency band to avoid mechanical resonance.

- The higher the setting value for Pr.11-15, the better the mechanical resonance is suppressed.
- The notch filter frequency should be equal to the mechanical frequency resonance.
- The notch filter bandwidth is the frequency range in which the notch filter is active.

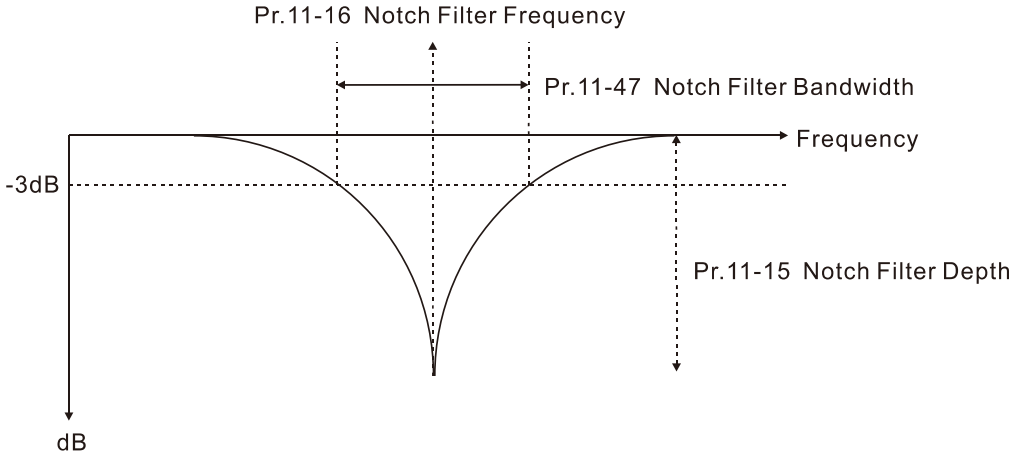

11-17	Forward Motor Torque Limit Quadrant I
11-18	Forward Regenerative Torque Limit Quadrant II
11-19	Reverse Motor Torque Limit Quadrant III
11-20	Reverse Regenerative Torque Limit Quadrant IV

Default: 500

Settings 0–500%

- FOCPG & FOC Sensorless mode:
  The motor rated current = 100%. The settings value for Pr.11-17–Pr.11-20 is compare with Pr.03-00 = 7, 8, 9, 10. The minimum value of the comparison result is the torque limit. The diagram below illustrates the torque limit.
- TQCPG and TQC Sensorless mode:
  The function of Pr.11-17–Pr.11-20 is the same as FOC; however, in this case, the torque limit and the torque command executes the output torque limit at the same time. Therefore, the minimum value between Pr.11-17–11-20 and Pr.06-12 becomes the current output torque limit.
- VF, VFPG and SVC mode:
  Pr.11-17–Pr.11-20 limit the output current, the percentage base value is the drive's rated current (not the motor's rated current). The minimum value between Pr.11-17–11-20 and Pr.06-12 becomes the current output limit. In acceleration and steady state operation, when the output current reaches the limit, the ocA (over-current during acceleration) protection or over-current stall prevention under steady-state operation acts. The output frequency drops, and recovers when the output current is lower than the limit value.
- Refer to Pr.11-34 for calculation equation for the motor rated torque.

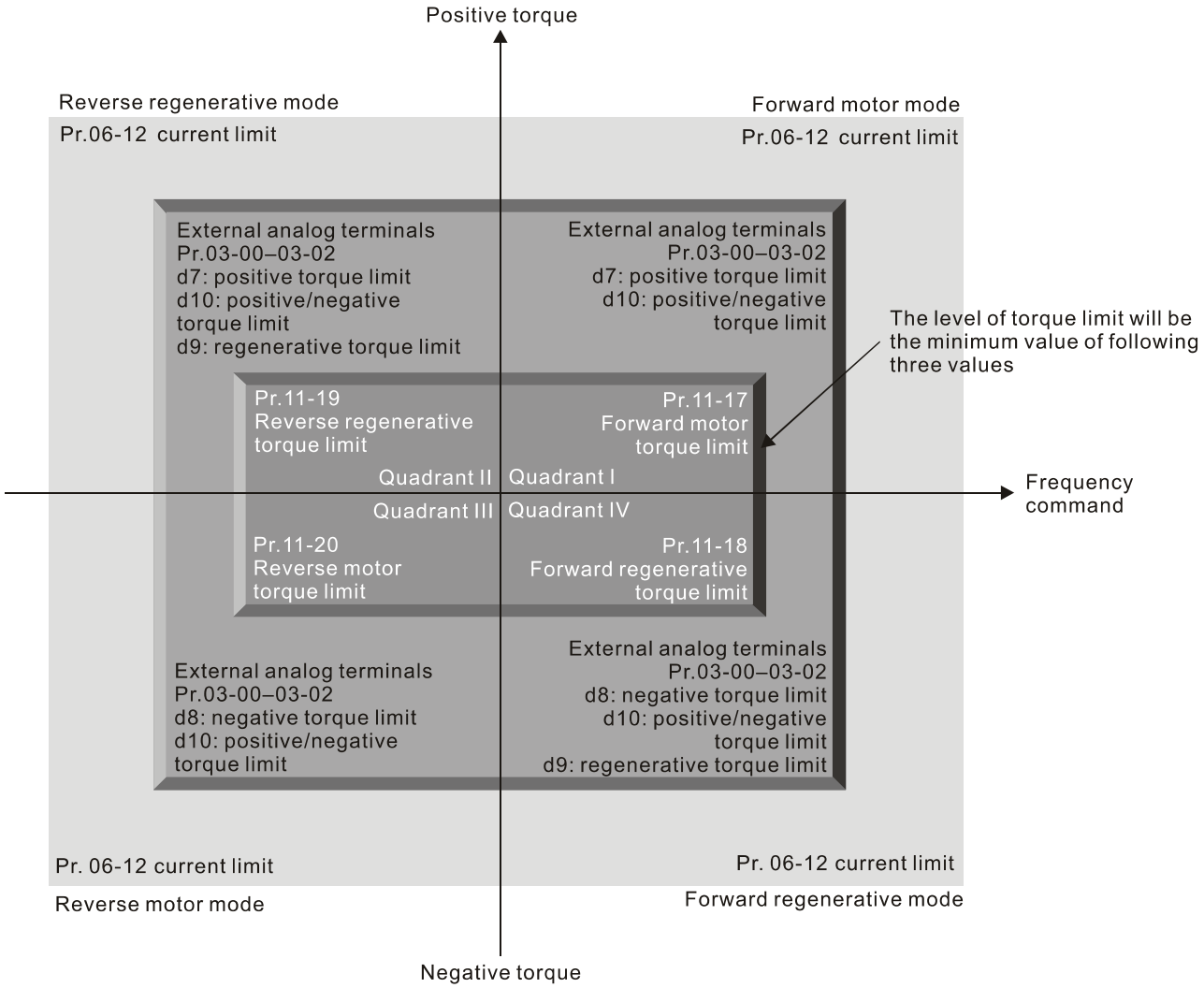

- All control mode is based on 100% of the motor rated current except for these four modes: IM: VF, VFPG, SVC / PM: PMSVC modes.
- If Pr.00-11=8 (SynRM sensorless), then the default becomes 200.

11-21 Flux Weakening Curve for Motor 1 Gain Value

Default: 90

Settings 0–200%

11-22 Flux Weakening Curve for Motor 2 Gain Value

Default: 90

Settings 0–200%

- Adjusts the output voltage for the flux-weakening curve.
- For the spindle application, use this adjustment method:
  1. Run the motor to the highest frequency.
  2. Observe the output voltage.
  3. Adjust the Pr.11-21 (motor 1) or Pr.11-22 (motor 2) setting to make the output voltage reach the motor rated voltage.
  4. The larger the setting value, the greater the output voltage.

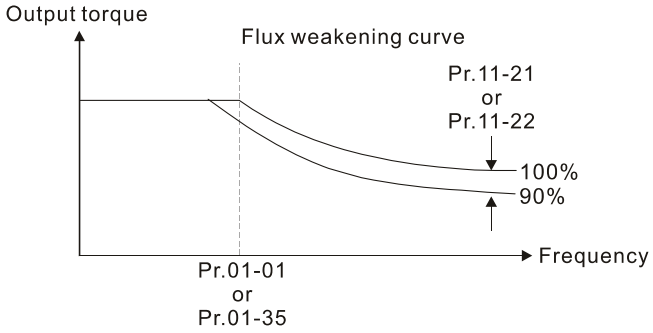

11-23 Flux Weakening Area Speed Response

Default: 65

Settings 0: Disable
0–150%

Controls the speed in the flux weakening area. The larger the value, the faster the acceleration/deceleration. In normal condition, you do not need to adjust this parameter.

11-24 APR Gain

Default: 5.00

Settings 0.00–40.00 (IM) / 0–100.00Hz (PM)

Defines the Kp gain for the Automatic Position Regulator (APR). The larger the APR proportional gain, the higher the position loop response bandwidth.

A large APR proportional gain causes a smaller phase margin, further making the motor oscillate back and forth. In this case, decrease the APR proportional gain value until the oscillation stops.

The smaller the APR proportional gain, the less the motor rigidity when positioning.

If increasing APR proportional gain does not meet your application even APR proportional gain is much larger than ASR speed bandwidth, adjust ASR speed bandwidth to a suitable value before adjusting APR proportional gain.

The actual position curve when increasing the APR proportional gain: from A to C(C>B>A). The dotted line is the position command, as shown in the diagram below.

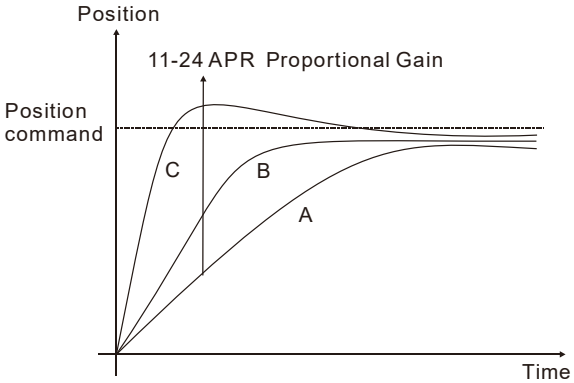

11-25 Gain Value for the APR Feed Forward

Default: 90

Settings 0–100

Use this parameter to improve the drive's tracking characteristics of position control and reduce the phase lag error. The higher the APR feedforward gain value, the less the pulse-train tracking error, and the faster the position control response. However, setting the APR feedforward gain too high may cause overshoot.

When external torque occurs, for example, if there is a load increase on the platform, too low proportional gain may not be able to meet your application for position tracking error. At this time, increase the APR feedforward gain appropriately to reduce the position dynamic tracking error effectively.

Switch between the speed mode and position control mode:

- When you switch from the speed mode to the position control mode, Pr.11-25 is automatically set to 100.
- When you switch from the position control mode to the speed mode, Pr.11-25 remains at the setting value you have set.

11-26 APR Curve Time

Default: 3.00

Settings 0.00–655.35 sec.

This parameter is the low-pass filter bandwidth for the APR feedforward gain (Pr.11-25). A rapid change of position input command may sometimes cause vibration when using the APR feedforward gain. Increase the low-pass filter bandwidth to reduce vibration.

11-27 Max. Torque Command

Default: 100

Settings 0–500%

Determines the upper limit of the torque command (motor rated torque is 100%).

11-28 Torque Offset Source

Default: 0

Settings 0: Disable
1: Analog signal input (Pr.03-00)
2: Pr.11-29
3: Controlled through external terminals (Pr.11-30–Pr.11-32)

Specifies the torque offset source.

When set to 3 (external terminal control), the torque offset sources are Pr.11-30, Pr.11-31 or Pr.11-32 according to the multi-function input terminal settings 31, 32 or 33. Refer to the following chart:

Normally open (N.O.) contact: ON= contact closed, OFF= contact open

Pr.11-32	Pr.11-31	Pr.11-30	Torque Offset
MIx = 33 (Low)	MIx = 32 (Mid)	MIx = 31 (High)	
OFF	OFF	OFF	None
OFF	OFF	ON	Pr.11-30
OFF	ON	OFF	Pr.11-31
OFF	ON	ON	Pr.11-30 + Pr.11-31
ON	OFF	OFF	Pr.11-32
ON	OFF	ON	Pr.11-30 + Pr.11-32
ON	ON	OFF	Pr.11-31 + Pr.11-32
ON	ON	ON	Pr.11-30 + Pr.11-31 + Pr.11-32

11-29 Torque Offset Setting

Default: 0.0

Settings -100.0–100.0%

Determines the torque offset command. The motor rated torque is 100%.

11-30 High Torque Offset

Default: 30.0

Settings -100.0–100.0%

11-31 Middle Torque Offset

Default: 20.0

Settings -100.0–100.0%

11-32 Low Torque Offset

Default: 10.0

Settings -100.0–100.0%

When Pr.11-28 is set to 3, the torque offset sources are Pr.11-30, Pr.11-31 or Pr.11-32 according to the multi-function input terminals settings 31, 32 or 33. The motor rated torque is 100%.

11-33 Torque Command Source

Default: 0

Settings
0: Digital keypad
1: RS-485 communication (Pr.11-34)
2: Analog signal input (Pr.03-00–03-02)
3: CANopen
5: Communication expansion card

When Pr.11-33 is set to 0 or 1, you can set the torque command in Pr.11-34.

When Pr.11-33 is set to 2, 3 or 5, Pr.11-34 only displays the torque command.

11-34 Torque Command

Default: 0.0

Settings -100.0–100.0% (Pr.11-27=100%)

This parameter sets the torque command. When Pr.11-27 is 250% and Pr.11-34 is 100%, the actual torque command = 250 × 100% = 250% of the motor rated torque.

The drive saves the setting before power is OFF.

The calculation equation for the motor rated torque:

Motor rated torque: $T(N.M) = \dfrac{P(W)}{\omega(rad/s)}$; P(W) value = Pr.05-02 (Pr.05-14);

ω(rad/s) value = Pr.05-03 (Pr.05-15); $\dfrac{RPM \times 2\pi}{60} = rad/s$

11-35 Torque Command Filter Time

Default: 0.000

Settings 0.000–1.000 sec.

When the setting is too long, the control is stable but the control response is delayed. When the

setting is too short, the response is quick but the control may be unstable. Adjust the setting according to your control and response situation.

🕮 If Pr.00-11=8 (SynRM sensorless), then the default becomes 0.050.

11-36 Speed Limit Selection

Default: 0

Settings 0: Set by Pr.11-37 (Forward Speed Limit) and Pr.11-38 (Reverse Speed Limit)
1: Set by Pr.00-20 (Source of Master Frequency Command) and Pr.11-37, Pr.11-38
2: Set by Pr.00-20 (Source of Master Frequency Command).

🕮 Speed limit function: when you use the torque control mode, if the torque command is greater than the load, the motor accelerates until the motor speed equals the speed limit. At this time, it switches to speed control mode to stop acceleration.

🕮 Pr.11-36=1:

- When the torque command is positive, the forward speed limit is Pr.00-20 and the reverse speed limit is Pr.11-38. When the torque command is negative, the forward speed limit is Pr.11-37 and the reverse speed limit is Pr.00-20.
- Example:
  In an unwinding application, if the torque command direction is different from the motor operating direction, the load drives the motor. In this case, the speed limit must be Pr.11-37 or Pr.11-38. Only in normal applications, when the motor drives the load and the torque command is in the same direction as the speed limit, you can set the speed limit according to Pr.00-20.

🕮 In torque control mode, the F page of keypad displays the present speed limit value. For details on the keypad display, refer to the LED Function Description in Chapter10 “Digital Keypad”.

Pr.11-36=0

Forward/reverse running speed are limited by Pr.11-37 and Pr.11-38

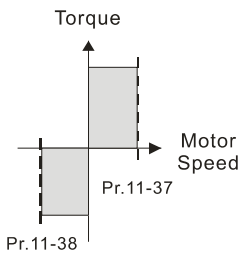

Pr.11-36=2

Forward/reverse running speed are limited by Pr.00-20

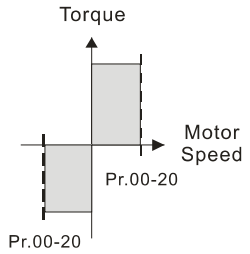

Pr.11-36=1

When torque is positive, forward running speed is limited by Pr.00-20; reverse running speed is limited by Pr.11-38

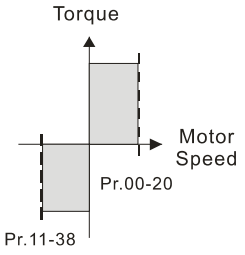

Pr.11-36=1

When torque is negative, forward running speed is limited by Pr.11-37; reverse running speed is limited by Pr.00-20

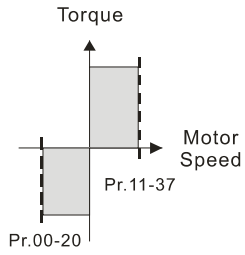

11-37 Forward Speed Limit (Torque Mode)

Default: 10

Settings 0–120%

11-38 Reverse Speed Limit (Torque Mode)

Default: 10

Settings 0–120%

Limits the speed for forward and reverse running in torque mode (Pr.01-00 maximum operation frequency = 100%).

11-39 Zero Torque Command Mode Selection

Default: 0

Settings 0: Torque mode
1: Speed mode

This parameter is only valid in TQCPG IM and TQCPG PM, and it defines the mode when the speed limit is 0% or 0Hz.

When you set Pr.11-39 to 0, and the speed limit is 0% or 0Hz, the motor generates an excitation current, and the torque command Pr.11-34 limits the torque.

When you set Pr.11-39 to 1, and the speed limit is 0% or 0Hz, the AC motor drive can generate output torque through the speed controller (the torque limit is Pr.06-12), and the control mode changes from TQC + PG to FOC + PG mode. The motor has a holding torque. If the speed command is not 0, the drive automatically changes it to 0.

11-40 Position Control Command Source

Default: 0

Settings 0: Input from internal register
2: Input from external pulse
3: RS-485
5: Communication card

11-42 System Control Flag

Default: 0000h

Settings 0000–FFFFh

bit No.	Function	Description
0	Current limit selection of the speed control in torque mode	0: The speed control in torque mode, the maximum current limit is the torque command. 1: The speed control in torque mode, the maximum current limit is Pr.06-12.
1	FWD / REV action control	0: FWD/ REV cannot be controlled by Pr.02-12 bit0 & 1 1: FWD/ REV can be controlled by Pr.02-12 bit0 & 1

11-43 Position Control Maximum Frequency

Default: 60.00

Settings 0.00–599.00 Hz

- Sets the maximum operating frequency when the drive is in position control mode.
- Also sets the speed limit for pulse-train positioning position control. If the output frequency reaches the maximum frequency for position control, the system uses the maximum frequency for position control as the operating frequency and slowly executes the remaining pulse-train commands.
- If the multi-function input terminal MI=35 (enable single-point positioning) is enabled under the speed mode, the drive refers to Pr.11-43 settings when executing the single-point positioning. Refer to the diagram below when Pr.11-43 is set to 40 Hz and 10 Hz respectively.

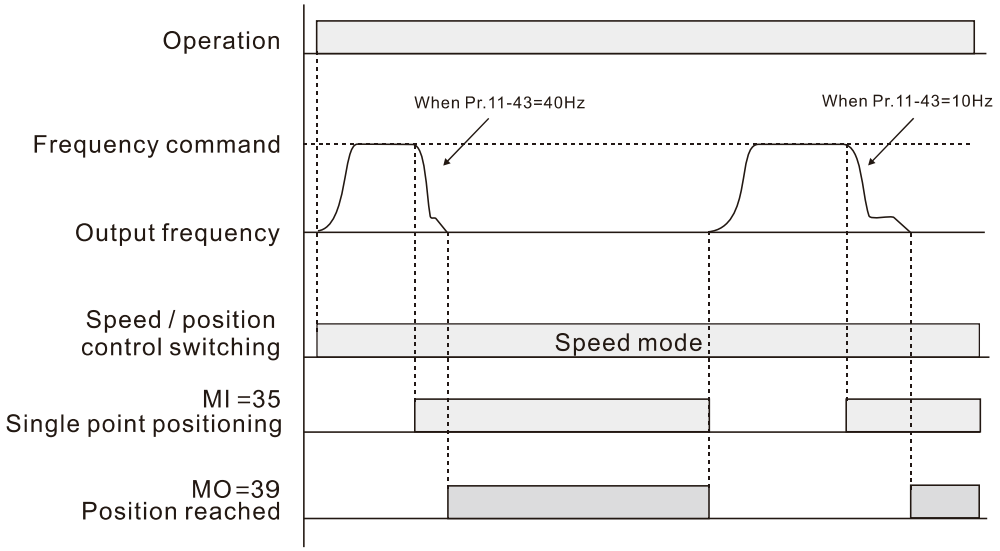

- If the multi-function input terminal MI=89 (position / speed mode switch) is enabled under the speed mode, the drive refers to Pr.11-43 settings when executing the pulse-train positioning position control, as shown in the diagram below.

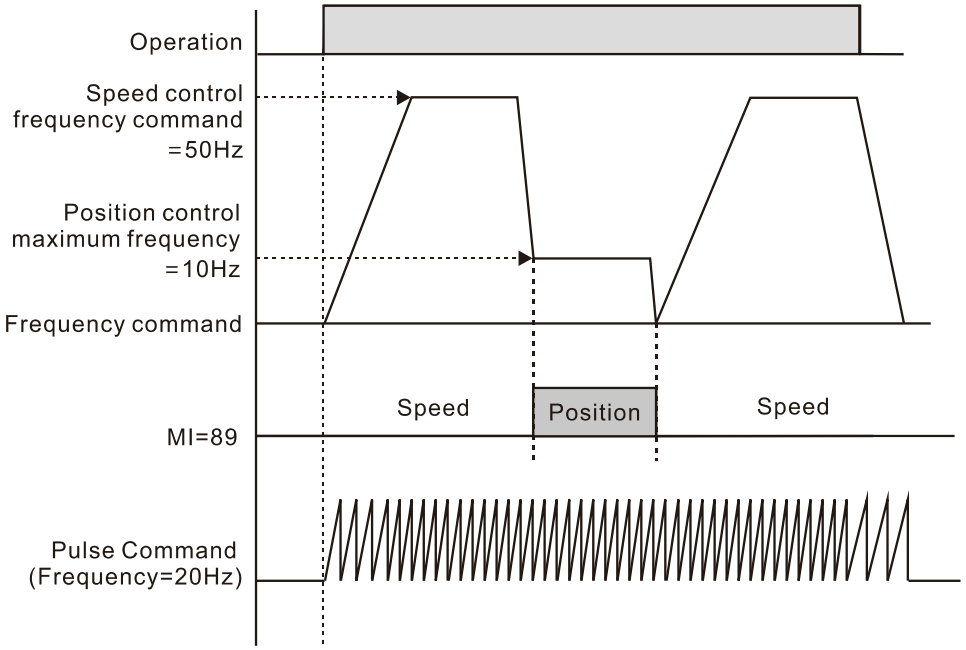

- When executing the homing position control, the last creeping speed refers to Pr.11-43 settings.
- When Pr.11-00 bit8=0 and the drive is in P2P positioning position control mode, the speed for each movement among positions also refers Pr.11-43 settings.

11-44 Point-to-Point Position Control Acceleration Time

Default: 1.00

Settings 0.00–655.35 sec.

11-45 Point-to-Point Position Control Deceleration Time

Default: 3.00

Settings 0.00–655.35 sec.

- Pr.11-44 sets the required time when the drive accelerates from 0.00 Hz to Pr.11-43 (Maximum Frequency for Position Control). Pr.11-45 sets the required time when the drive decelerates from Pr.11-43 (Maximum Frequency for Position Control) to 0.00 Hz
- The acceleration and deceleration time for position control is invalid for pulse-train position command.
- The acceleration and deceleration time for P2P positioning position control is equal to Pr.11-44 and Pr.11-45.

11-46 Torque Output Filter Gain (applied to 230V / 460V models)

Default: 0.050

Settings 0.000–65.535

- Sets the filter gain of the torque output display (keypad display and communication read), including Pr.00-04 = 8 displays the output torque (%) that the drive calculates, the output torque (XXX.X %) of communication address 210B and the positive / negative output torque (%) that 2208 drive calculates (XXX.X %).

11-50 APR S-curve Time

Default: 0.300

Settings 0.000–1.000 sec.

- Only valid when MI=35 (enable single-point positioning) is enabled. The longer the Pr.11-50 time, the longer the positioning takes.
- Smooths the position command in single-point positioning position control mode, especially the application for the operation of mechanical structure. When load inertia increases, the inertia generated by the motor in the process of stopping also increases, further worsening the smoothness of operation. In this case, increase Pr.11-50 to the elevate smoothness.
- If the multi-function input terminal MI=35 (enable single-point positioning) is enabled under the speed mode, the drive refers to Pr.11-50 settings when executing the single-point positioning. Refer to the diagram below when Pr.11-50 is set to 1 and 0.3 second respectively.

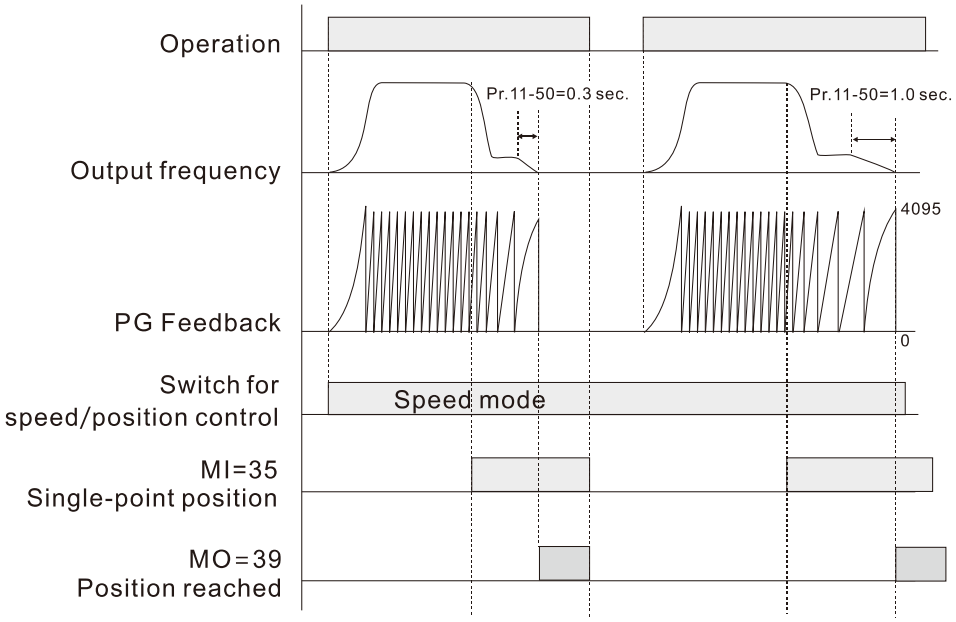

11-52 Allowable Position Error Range

Default: 10

Settings 0–65535 pulse

11-53 Allowable Position Error Cumulative Time

Default: 0.500

Settings 0.000–65.535 sec.

- When the position error is smaller than or equal to the allowed position error tolerance, and exceeds Pr.11-53 setting time, MO=39 (position reached) outputs.
- If the position error is larger than the allowed position error tolerance, the drive waits until the position error is smaller than or equal to the allowed tolerance and until Pr.11-53 setting time arrives, MO=39 outputs.

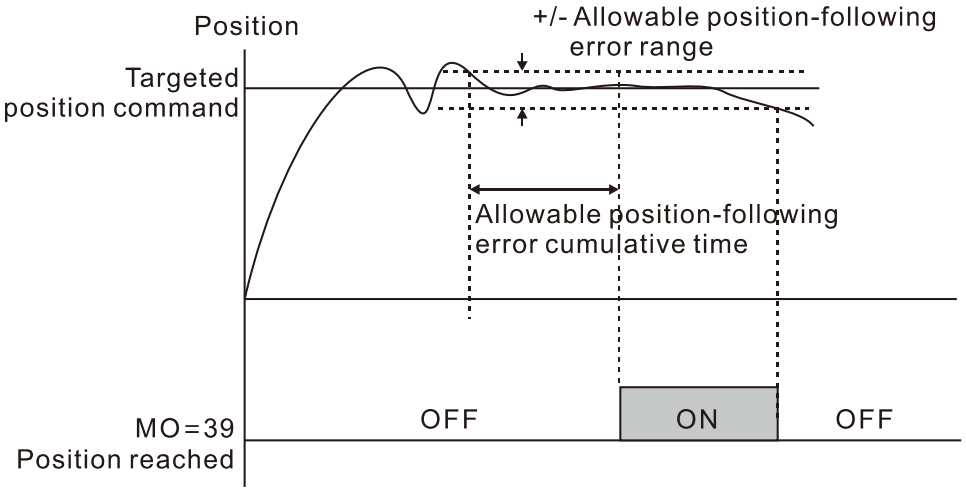

11-51 Maximum Allowable Position Error

Default: 1000

Settings 0–65535

11-54 Treatment to the Large Position Control Error

Default: 0

Settings 0: Warn and continue operation (display oPE on keypad)
1: Fault and ramp to stop (display oPEE on keypad)
2: Fault and coast to stop (display oPEE on keypad)

- Defines the maximum error between the allowed position command and the actual position feedback when the drive is in the position control mode.
- If the position error is larger than the maximum allowed position error, the drive acts according to Pr.11-54 settings.

11-56 Software Positive Limit

Default: 30000

Settings -30000–30000 revolutions

11-57 Software Positive Limit

Default: 0

Settings Refer to Pr.10-01 setting

11-58 Software Negative Limit

Default: -30000

Settings -30000–30000 revolutions

11-59 Software Negative Limit

Default: 0

Settings Refer to Pr.10-01 setting

- When in position control mode, if the motor moves in the forward direction and the position command exceeds Pr.11-56 and Pr.11-57 setting values, the drive stops quickly and the warning code SPL occurs.
- When in position control mode, if the motor moves in the reverse direction and the position command exceeds Pr.11-58 and Pr.11-59 setting values, the drive stops quickly and the warning code SnL occurs.
- This function is valid when Pr.11-60 bit2=1 under position control mode.

11-60 Position Control Bit

Default: 00Ah

Settings bit0: Enable position memory function
bit1: The pulse per revolution at load side counts by ppr
bit2: Enable software limit function
bit3: Enable hardware limit function

Pr.11-60	Setting	Description
bit 0	Position memory function is enabled	bit0=0: position memory function is disabled bit0=1: position memory function is enabled
bit 1	Single revolution at the load side is calculated by PPR	bit1=0: Calculate the single revolution at the load is by the Z-phase signal. bit1=1: Calculate the single revolution at the load side by PPR.
bit 2	Software limit switch function is enabled	bit2=1: Software limit switch function is enabled when the drive is in P2P positioning and pulse-train positioning position control modes bit2=0: Software limit switch function is disabled when the drive is in P2P positioning and pulse-train positioning position control modes
bit 3	Hardware limit switch function is enabled	bit3=1: Hardware limit switch function is enabled when the drive is in position control mode bit3=0: Hardware limit switch function is disabled when the drive is in position control mode

Control modes for Pr.11-60 bit2 and bit3 settings:

Motor	Induction Motor (IM)						
Control Mode	VF	VFPG	SVC	FOCPG	FOC	TQCPG	TQC
Bit2: SW limit switch function enabled	N/A	N/A	N/A	Warning displays	N/A	Warning displays	N/A
Bit3: HW limit switch function enabled	Error displays	Error displays	Error displays	Warning displays	Error displays	Warning displays	Error displays

Motor	Permanent Magnet Synchronous Motor (PM)					Synchronous Reluctance Motor (SynRM)
Control Mode	PM SVC	FOCPG PM	PM FOC	HFI	PM TQCPG	
Bit2: SW limit switch function enabled	N/A	Warning displays	N/A	N/A	Warning displays	N/A
Bit3: HW limit switch function enabled	Error displays	Warning displays	Error displays	Error displays	Warning displays	Error displays

Positioning Method	Single-point	Pulse-train	Homing	P2P
Bit2: SW limit switch function enabled	N/A	Warning displays	N/A	Warning displays
Bit3: HW limit switch function enabled	N/A	Warning displays	Warning displays	Warning displays

The position memory function is available for coordinate system that remains at the mechanical origin after the drive's power-off when using incremental encoder

For example, if the motor stops at the absolute position 100000 before power-off, then the motor's initial position remains at 100000 and homing has been completed after the drive is powered on

again. With the position memory function, you do not need to do the homing again. It is time-saving and more efficient.

- The position memory function is valid only when the homing has been completed. Any incomplete homing cannot work with this function.
- The position memory function only works with motor that has braking mechanism. If you move the motor by hands or by other methods when the drive is powered off, the saved origin will be different from the actual origin after power resumes because the drive cannot realize the moving distance during power-off, further causing a risk of collision when executing position commands.

11-62 Encoder at Load Side ppr Number (high byte)

Default: 0

11-63 Encoder at Load Side ppr Number (low byte)

Default: 0

Settings 0–65535

- When the encoder is installed at the motor side and the Z-phase is installed at the load side, you must set the PPR number at the load side to ensure the actual number of pulses per revolution because the pulse number for single revolution relates to the mechanical gear ratio and encoder PPR.

  Example:

  Assume that the mechanical gear ratio of the motor side to the load side is 10:1 (motor's 10 revolutions = load's 1 revolution) and Pr.10-01=1024:

  - If you are to position at the load side at 0 degree, set Pr.11-62=0 and Pr.11-63=10240 [=1024 × 10]
  - If you are to position at the load side at 270 degrees, set Pr.11-65=0 and Pr.11-66=7680 [=10240 × 3/4].
- Pr.11-63 and Pr.11-66 change with Pr.10-01 setting values. For example, set Pr.10-01=600, Pr.11-63=2400, and Pr.11-66=0–2399. Then, when you change Pr.10-01 to 1024, Pr.11-63 automatically changes to 4096, and Pr.11-66 setting range changes to 0–4095.

11-65 Positioning for Encoder Position (High Byte)

Default: 0

Settings 0–the upper limit of ppr at load side

11-66 Positioning for Encoder Position (Low Byte)

Default: 2399

Settings 0–the upper limit of ppr at load side

- Defines the position of single-point positioning. Only valid for the coordinate system that uses accumulated single revolution for the motor encoder.
- The coordinate system that uses accumulated single revolution for the motor encoder is established through the Z-phase signal. Without the Z-phase signal, such coordinate system cannot be established normally even though the drive is powered on.
- Needs to use with the multi-function input terminal MI=35 (Enable single-point positioning)
- When the single-point positioning position is set to 0, it is equal to the Z-phase position of the encoder.

- Single-point positioning position = Pr.11-65 × 65535 + Pr.11-66. And the maximum setting value is the number of pulses per revolution at the load side (Pr.11-62 and Pr.11-63).
- When the motor starts and runs at zero speed, and MI=35 (Enable single-point positioning) is active (level-triggered), the motor immediately moves to the single-point positioning position according to the current operation direction, as shown in the diagram below.

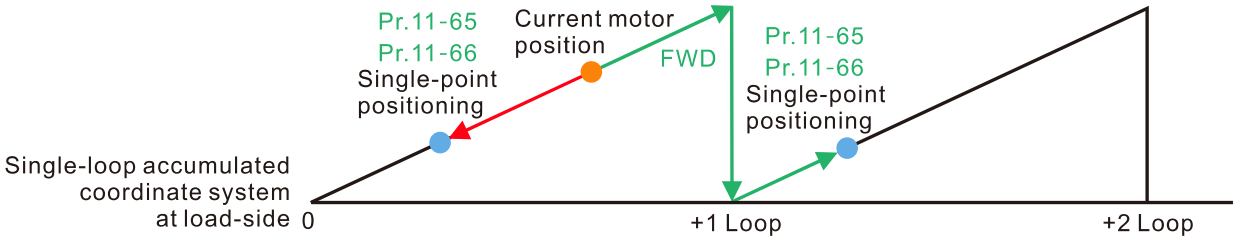

- When the motor starts and runs at constant speed, and MI=35 (Enable single-point positioning) is active (level-triggered), the motor starts to move and stop at the single-point positioning position according to the current speed and operation direction, as shown in the diagram below. The moving number of revolutions depends on the current moving speed.

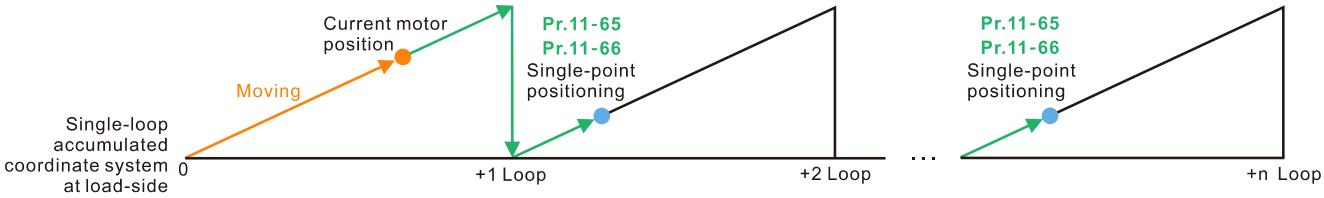

- When executing the single-point positioning, the moving distance will not be larger than one revolution if the drive has finished establishing the single revolution coordinate system.
- In the process of motor's operation and drive's executing single-point positioning, if MI=35 (Enable single-point positioning) is inactive, then the drive's single-point positioning function is disabled. If the drive was in speed mode before executing single-point positioning, the drive starts to accelerate to the operating speed.
- For example, assume that Pr.11-65=1 and Pr.11-66=64464, then the single-point positioning position = 130000 [=1 × 65536+64464]. To position at 130000, if the current position of the load is at 0, and the motor PPR is 1024, then the actual number of pulses for the motor is 126 revolutions and 976 pulses [=130000/1024].

11-68 Homing Method

Default: 0008h

Settings 0000h–0128h

- Used for establishing the coordinate system that uses accumulated multiple revolution for the motor encoder.
- How to set Pr.11-68:

  Example:

  Set Pr.11-68=012h when using homing method 4; set Pr.11-68=116h when using homing method 10.

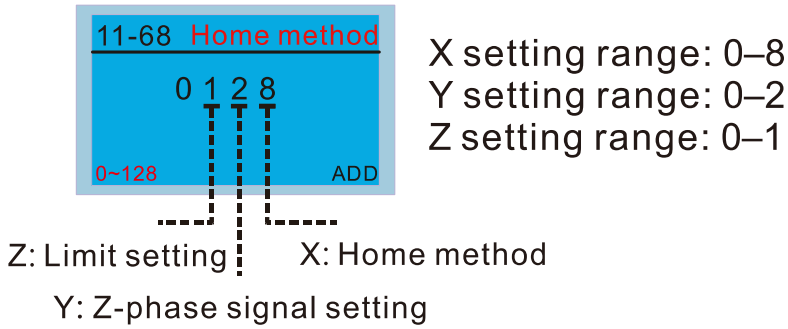

Setting and description of homing parameter design (XYZ):

Z	Y	X
Home Limit	Z-phase Signal Setting	Homing Mode
0–1	0–2	0–8
-	Y=0: Reverse the direction to locate the Z-phase signal Y=1: Continue to locate the Z-phase signal in the same direction Y=2: Do not locate the Z-phase signal	0: Execute homing position control in the forward direction. Use the positive limit switch as the homing reference point.
		1: Execute homing position control in the reverse direction. Use the negative limit switch as the homing reference point.
When home limit is reached: Z=0: error is displayed Z=1: the direction is reversed		2: Execute homing position control in the forward direction. Use the ORG switch (from 0 to 1) as the homing reference point.
		3: Execute homing position control in the reverse direction. Use the ORG switch (from 0 to 1) as the homing reference point.
	-	4: Locate the Z-phase signal in the forward direction and use the Z-phase signal as homing.
		5: Locate the Z-phase signal in the reverse direction and use the Z-phase signal as homing.
	Y=0: Reverse the direction to locate the Z-phase signal Y=1: Continue to locate the Z-phase signal in the same direction Y=2: Do not locate the Z-phase signal	6: Execute homing position control in the forward direction. Use the ORG switch (from 1 to 0) as the homing reference point.
		7: Execute homing position control in the reverse position. Use the ORG switch (from 1 to 0) as the homing reference point.
-	-	8: Use the current position as the origin.

NOTE

Forward direction means running in the clockwise (CW) direction; reverse direction means running in the counterclockwise (CCW) direction.

You can use Pr.11-43, Pr.11-68–Pr.11-74 and MI=47 (enable the homing function) to execute homing position control.

The correspondence between XYZ and CiA402 for homing mode selection:

CiA402 Object 0x6098H	Z	Y	X	Function Description
Homing Method	Home Limit	Z-phase Signal Setting	Homing Mode	
1	-	0	1	Execute homing position control in the reverse direction until encountering the negative limit switch. Then, the direction is reversed to locate the Z-phase signal as the origin.
2	-	0	0	Execute homing position control in the forward direction until encountering the positive limit switch. Then, the direction is reversed to locate the Z-phase signal as the origin.
3	0	0	2	Execute homing position control in the forward direction until encountering the ORG switch (from 0 to 1). Then, the direction is reversed to locate the Z-phase signal as the origin. Stops when encountering the positive limit switch.
4	0	1	2	Execute homing position control in the forward direction until encountering the ORG switch (from 0 to 1). Then, continue locating the Z-phase signal in the same direction as the origin. Stops when encountering the positive limit switch.
5	0	0	3	Execute homing position control in the reverse direction until encountering the ORG switch (from 0 to 1). Then, the direction is reversed to locate the Z-phase signal as the origin. Stops when encountering the negative limit switch.
6	0	1	3	Execute homing position control in the reverse direction until encountering the ORG switch (from 0 to 1). Then, continue locating the Z-phase signal in the same direction as the origin. Stops when encountering the negative limit switch.
7	1	0	2	Execute homing position control in the forward direction until encountering the ORG switch (from 0 to 1). Then, the direction is reversed to locate the Z-phase signal as the origin. When encountering the positive limit switch, the direction is reversed to locate the origin.
8	1	1	2	Execute homing position control in the forward direction until encountering the ORG switch (from 0 to 1). Then, continue locating the Z-phase signal in the same direction as the origin. When encountering the positive limit switch, the direction is reversed to locate the origin.
9	1	0	6	Execute homing position control in the forward direction until encountering the ORG switch (from 1 to 0). Then, the direction is reversed to locate the Z-phase signal as the origin. When encountering the positive limit switch, the direction is reversed to locate the origin.
10	1	1	6	Execute homing position control in the forward direction until encountering the ORG switch (from 1 to 0). Then, continue locating the Z-phase signal in the same direction as the origin. When encountering the positive limit switch, the direction is reversed to locate the origin.

CiA402 Object 0x6098H	Z	Y	X	Function Description
Homing Method	Home Limit	Z-phase Signal Setting	Homing Mode	
11	1	0	3	Execute homing position control in the reverse direction until encountering the ORG switch (from 0 to 1). Then, the direction is reversed to locate the Z-phase signal as the origin. When encountering the negative limit switch, the direction is reversed to locate the origin.
12	1	1	3	Execute homing position control in the reverse direction until encountering the ORG switch (from 0 to 1). Then, continue locating the Z-phase signal in the same direction as the origin. When encountering the negative limit switch, the direction is reversed to locate the origin.
13	1	0	7	Execute homing position control in the reverse direction until encountering the ORG switch (from 1 to 0). Then, the direction is reversed to locate the Z-phase signal as the origin. When encountering the negative limit switch, the direction is reversed to locate the origin.
14	1	1	7	Execute homing position control in the reverse direction until encountering the ORG switch (from 1 to 0). Then, continue locating the Z-phase signal in the same direction as the origin. When encountering the negative limit switch, the direction is reversed to locate the origin.
15	Reserved			Reserved
16	Reserved			Reserved
17	-	2	1	Execute homing position control in the reverse direction and use the negative limit switch as the origin.
18	-	2	0	Execute homing position control in the forward direction and use the positive limit switch as the origin.
19	No correspondence			See the diagram for homing method 19
20	0	2	2	Execute homing position control in the forward direction and use the ORG switch signal (from 0 to 1) as the origin. Stops when encountering the positive limit switch.
21	No correspondence			See the diagram for homing method 21
22	0	2	3	Execute homing position control in the reverse direction and use the ORG switch signal (from 0 to 1) as the origin. Stops when encountering the negative limit switch.
23	No correspondence			See the diagram for homing method 23
24	1	2	2	Execute homing position control in the forward direction and use the ORG switch signal (from 0 to 1) as the origin. The direction is reversed to locate the origin when encountering the positive limit switch.
25	No correspondence			See the diagram for homing method 25
26	1	2	6	Execute homing position control in the forward direction and use the ORG switch signal (from 1 to 0) as the origin. The direction is reversed to locate the origin when encountering the positive limit switch.

CiA402 Object 0x6098H	Z	Y	X	Function Description
Homing Method	Home Limit	Z-phase Signal Setting	Homing Mode	
27	No correspondence			See the diagram for homing method 27
28	1	2	3	Execute homing position control in the reverse direction and use the ORG switch signal (from 0 to 1) as the origin. The direction is reversed to locate the origin when encountering the negative limit switch.
29	No correspondence			See the diagram for homing method 29
30	1	2	7	Execute homing position control in the reverse direction and use the ORG switch signal (from 1 to 0) as the origin. The direction is reversed to locate the origin when encountering the negative limit switch.
31	Reserved			Reserved
32	Reserved			Reserved
33	0	-	5	Locate the Z-phase signal in the reverse direction and use the Z-phase signal as the origin. Stops when encountering the negative limit switch.
34	0	-	4	Locate the Z-phase signal in the forward direction and use the Z-phase signal as the origin. Stops when encountering the positive limit switch.
35	-	-	8	Use the current position as the origin.

📖 Homing methods 19, 21, 23, 25, 27, and 29 cannot be set through the digital keypad KPC-CC01. Set them through communications.

Execute homing position control in the forward direction until encountering the positive limit switch. Then, the direction is reversed to locate the Z-phase signal as the origin.

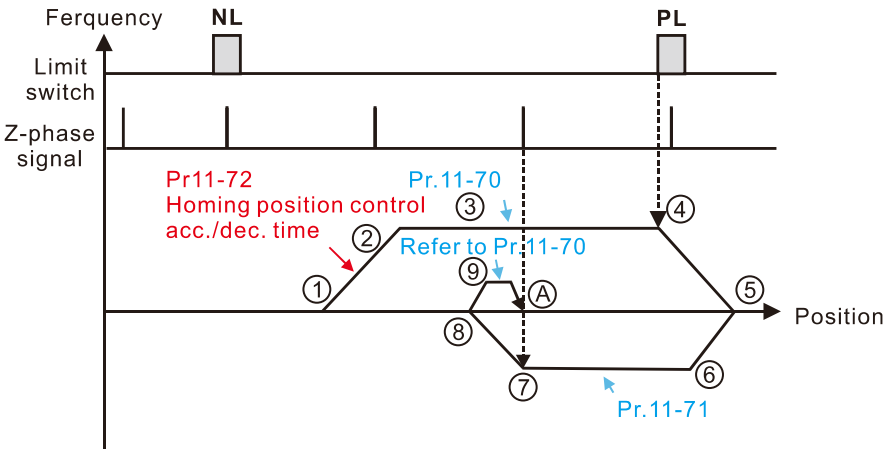

① FWD Run for execute Homing position control function.
② Accelerate to Pr.11-70 Homing position control 1st step speed according to Pr.11-72 Homing control acc./dec. time.
③ Operating with Pr.11-70 Homing position control 1st step speed.
④ Deceleration according to Pr.11-72 after encountering the rising edge of the PL.
⑤ Decelerate to 0Hz and change operating direction. After, accelerate to Pr.11-71 Homing control 2nd step speed according to Pr.11-72.
⑥ Operating with Pr.11-71 Homing control 2nd step speed.
⑦ Deceleration according to Pr.11-72 after encountering the Z-phase signal.
⑧ Decelerate to 0Hz and change operating directions for search Z-phase signal.
⑨ Refer to Pr.11-70 Homing position control 1st step speed and start to execute creep speed.
Ⓐ Positioning in Z-phase signal completed.

Execute homing position control in the reverse direction until encountering the negative limit switch. Then, the direction is reversed to locate the Z-phase signal as the origin.

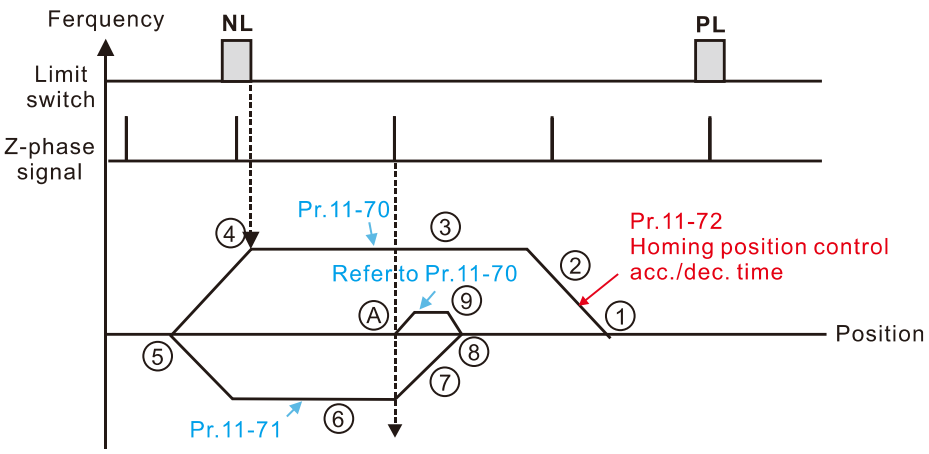

① REV Run for execute Homing position control function
② Accelerate to Pr.11-70 Homing position control 1st step speed according to Pr.11-72 Homing control acc./dec. time.
③ Operating with Pr.11-70 Homing position control 1st step speed
④ Deceleration according to Pr.11-72 after encountering the rising edge of the NL
⑤ Decelerate to 0Hz and change operating direction. After, accelerate to Pr.11-71 Homing control 2nd step speed according to Pr.11-72.
⑥ Operating with Pr.11-71 Homing control 2nd step speed
⑦ Deceleration according to Pr.11-72 after encountering the Z-phase signal
⑧ Decelerate to 0Hz and change operating directions for search Z-phase signal.
⑨ Refer to Pr.11-70 Homing position control 1st step speed and start to execute creep speed.
Ⓐ Positioning in Z-phase signal completed

Execute homing position control in the forward direction until encountering the ORG switch (from 0 to 1). Then, the direction is reversed to locate the Z-phase signal as the origin.

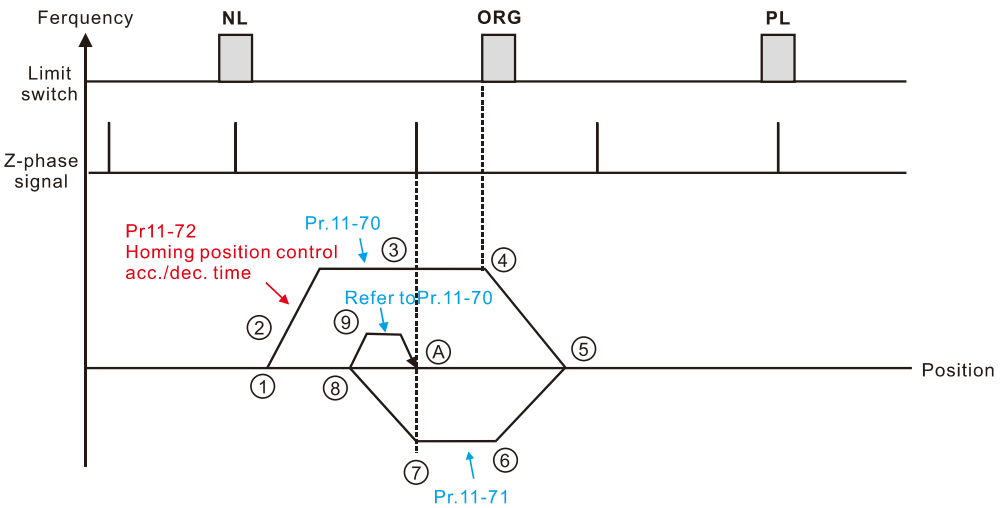

① FWD Run for execute Homing position control function.
② Accelerate to Pr.11-70 Homing position control 1st step speed according to Pr.11-72 Homing control acc./dec. time.
③ Operating with Pr.11-70 Homing position control 1st step speed.
④ Deceleration according to Pr.11-72 after encountering the ORG.
⑤ Decelerate to 0Hz and change operating direction. After, accelerate to Pr.11-71 Homing control 2nd step speed according to Pr.11-72.
⑥ Operating with Pr.11-71 Homing control 2nd step speed.
⑦ Deceleration according to Pr.11-72 after encountering the Z-phase signal.
⑧ Decelerate to 0Hz and change operating directions for search Z-phase signal.
⑨ Refer to Pr.11-70 Homing position control 1st step speed and start to execute creep speed.
Ⓐ Positioning in Z-phase signal completed.

Execute homing position control in the reverse direction until encountering the ORG switch (from 0 to 1). Then, the direction is reversed to locate the Z-phase signal as the origin.

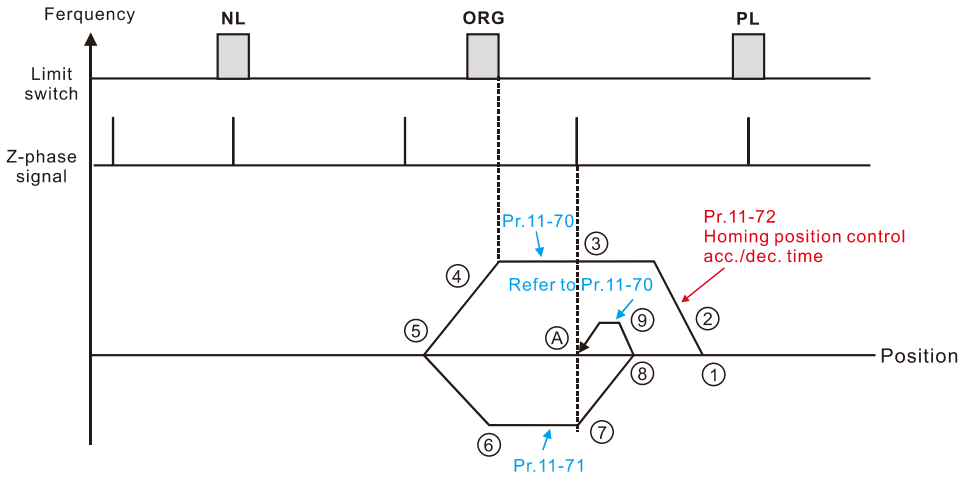

① REV Run for execute Homing position control function.
② Accelerate to Pr.11-70 Homing position control 1st step speed according to Pr.11-72 Homing control acc./dec. time.
③ Operating with Pr.11-70 Homing position control 1st step speed.
④ Deceleration according to Pr.11-72 after encountering the ORG.
⑤ Decelerate to 0Hz and change operating direction. After, accelerate to Pr.11-71 Homing control 2nd step speed according to Pr.11-72.
⑥ Operating with Pr.11-71 Homing control 2nd step speed.
⑦ Deceleration according to Pr.11-72 after encountering the Z-phase signal.
⑧ Decelerate to 0Hz and change operating directions for search Z-phase signal.
⑨ Refer to Pr.11-70 Homing position control 1st step speed and start to execute creep speed.
Ⓐ Positioning in Z-phase signal completed.

Execute homing position control in the forward direction until encountering the ORG switch (from 0 to 1). Then, continue locating the Z-phase signal in the same direction as the origin.

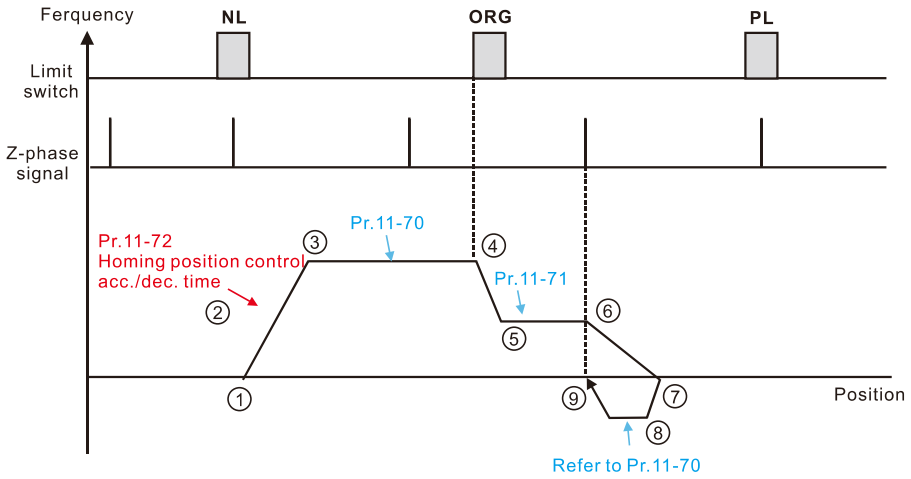

① FWD Run for execute Homing position control function.
② Accelerate to Pr.11-70 Homing position control 1st step speed according to Pr.11-72 Homing control acc./dec. time.
③ Operating with Pr.11-70 Homing position control 1st step speed.
④ Deceleration according to Pr.11-72 after encountering the rising edge of the ORG.
⑤ Decelerate to Pr.11-71 Homing control 2nd step speed.
⑥ Deceleration according to Pr.11-72 after encountering the Z-phase signal.
⑦ Decelerate to 0Hz and change operating directions for search Z-phase signal.
⑧ Refer to Pr.11-70 Homing position control 1st step speed and start to execute creep speed.
⑨ Positioning in Z-phase signal completed.

Execute homing position control in the reverse direction until encountering the ORG switch (from 0 to 1). Then, continue locating the Z-phase signal in the same direction as the origin.

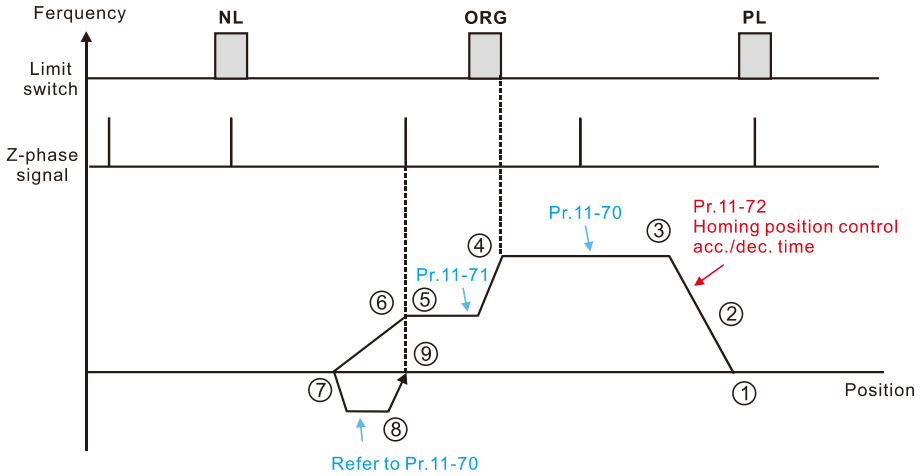

① REV Run for execute Homing position control function
② Accelerate to Pr.11-70 Homing position control 1st step speed according to Pr.11-72 Homing control acc./dec. time.
③ Operating with Pr.11-70 Homing position control 1st step speed
④ Deceleration according to Pr.11-72 after encountering the rising edge of the ORG
⑤ Decelerate to Pr.11-71 Homing control 2nd step speed.
⑥ Deceleration according to Pr.11-72 after encountering the Z-phase signal
⑦ Decelerate to 0Hz and change operating directions for search Z-phase signal.
⑧ Refer to Pr.11-70 Homing position control 1st step speed and start to execute creep speed.
⑨ Positioning in Z-phase signal completed

Locate the Z-phase signal in the forward direction and use the Z-phase signal as the origin.

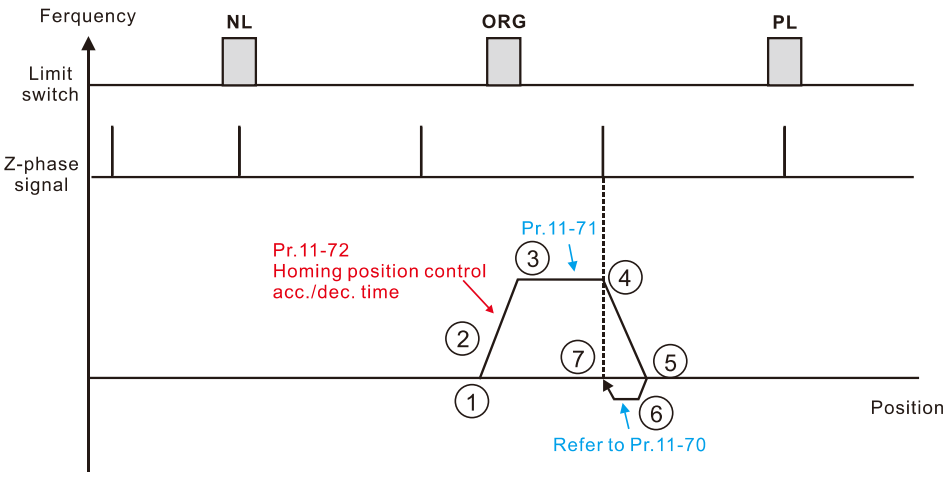

① FWD Run for execute Homing position control function.
② Accelerate to Pr.11-71 Homing position control 2nd step speed according to Pr.11-72 Homing control acc./dec. time.
③ Operating with Pr.11-71 Homing position control 2nd step speed.
④ Deceleration according to Pr.11-72 after encountering the Z-phase signal.
⑤ Decelerate to 0Hz and change operating directions for search Z-phase signal.
⑥ Refer to Pr.11-70 Homing position control 1st step speed and start to execute creep speed.
⑦ Positioning in Z-phase signal completed.

Locate the Z-phase signal in the reverse direction and use the Z-phase signal as the origin.

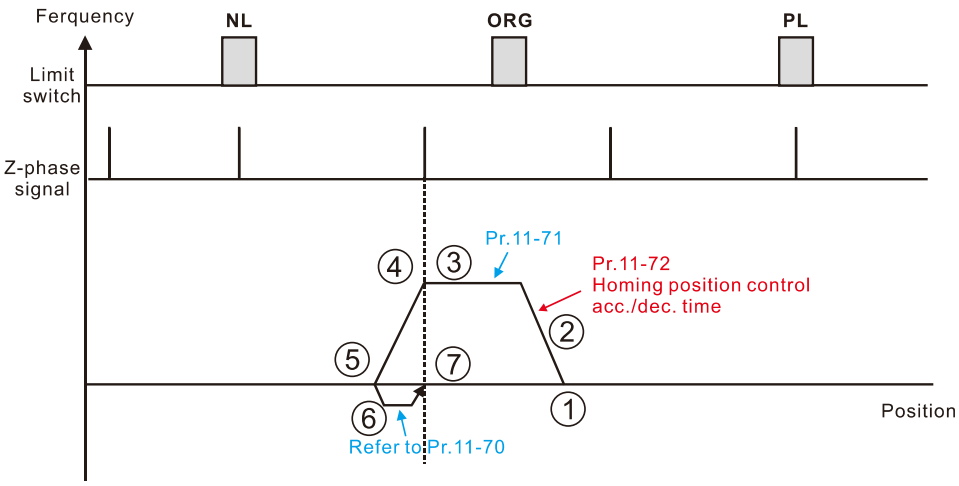

① REV Run for execute Homing position control function.
② Accelerate to Pr.11-71 Homing position control 2nd step speed according to Pr.11-72 Homing control acc./dec. time.
③ Operating with Pr.11-71 Homing position control 2nd step speed.
④ Deceleration according to Pr.11-72 after encountering the Z-phase signal.
⑤ Decelerate to 0Hz and change operating directions for search Z-phase signal.
⑥ Refer to Pr.11-70 Homing position control 1st step speed and start to execute creep speed.
⑦ Positioning in Z-phase signal completed.

Execute homing position control in the forward direction and use the positive limit switch or the ORG switch as the origin.

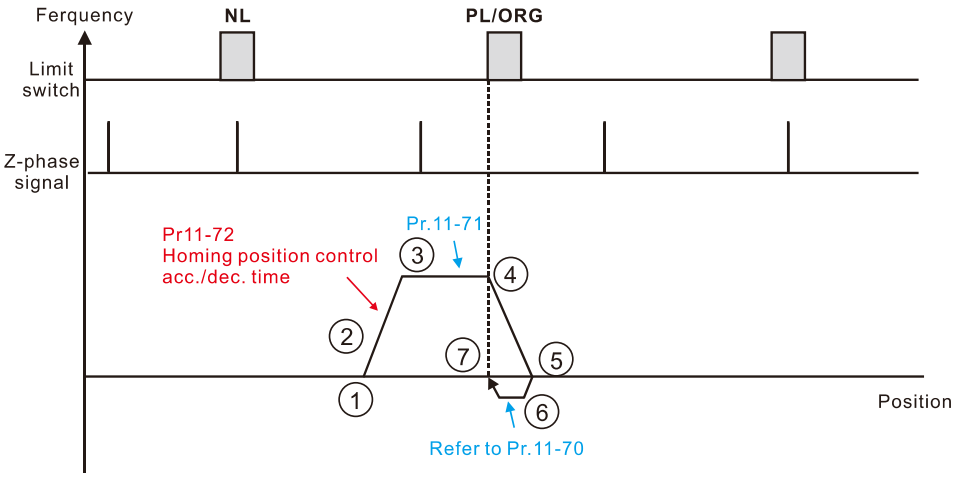

① FWD Run for execute Homing position control function.
② Accelerate to Pr.11-71 Homing position control 2nd step speed according to Pr.11-72 Homing control acc./dec. time.
③ Operating with Pr.11-71 Homing position control 2nd step speed.
④ Deceleration according to Pr.11-72 after encountering the rising edge of the PL/ORG.
⑤ Decelerate to 0Hz and change operating directions for search PL/ORGl.
⑥ Refer to Pr.11-70 Homing position control 1st step speed and start to execute creep speed.
⑦ Positioning in PL/ORG completed.

Execute homing position control in the reverse direction and use the negative limit switch or the ORG switch as the origin.

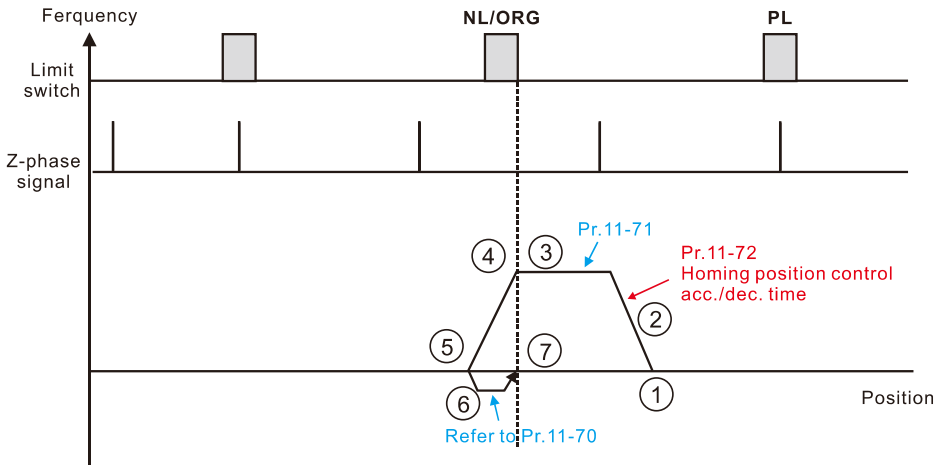

① REV Run for execute Homing position control function.
② Accelerate to Pr.11-71 Homing position control 2nd step speed according to Pr.11-72 Homing control acc./dec. time.
③ Operating with Pr.11-71 Homing position control 2nd step speed.
④ Deceleration according to Pr.11-72 after encountering the rising edge of the NL/ORG.
⑤ Decelerate to 0Hz and change operating directions for search NL/ORGI.
⑥ Refer to Pr.11-70 Homing position control 1st step speed and start to execute creep speed.
⑦ Positioning in NL/ORG completed.

Execute homing position control in the forward direction until encountering the positive limit switch. Then, the direction is reversed to locate the Z-phase signal as the origin.

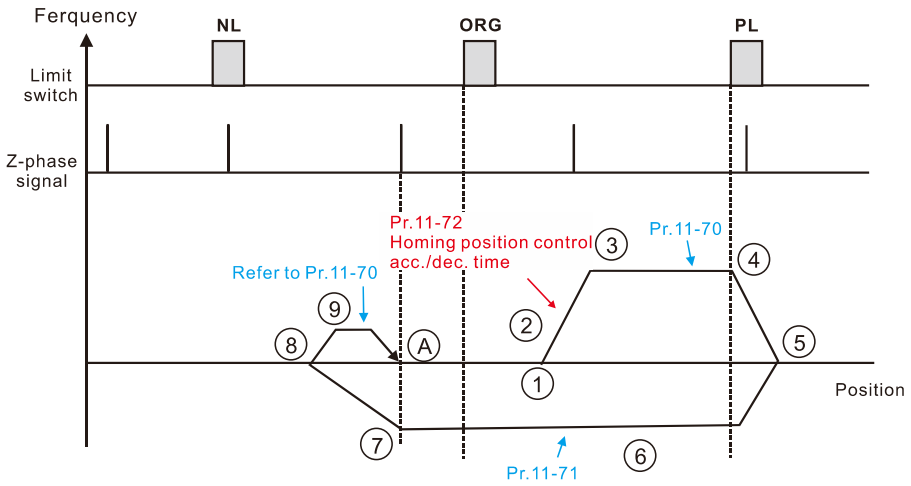

① FWD Run for execute Homing position control function.
② Accelerate to Pr.11-70 Homing position control 1st step speed according to Pr.11-72 Homing control acc./dec. time.
③ Operating with Pr.11-70 Homing position control 1st step speed.
④ Deceleration according to Pr.11-72 after encountering the PL.
⑤ Decelerate to 0Hz and change operating direction. After, accelerate to Pr.11-71 Homing control 2nd step speed according to Pr.11-72.
⑥ Operating with Pr.11-71 Homing control 2nd step speed.
⑦ Deceleration according to Pr.11-72 after encountering the Z-phase signal.
⑧ Decelerate to 0Hz and change operating directions for search Z-phase signal.
⑨ Refer to Pr.11-70 Homing position control 1st step speed and start to execute creep speed.
Ⓐ Positioning in Z-phase signal completed.

Execute homing position control in the reverse direction until encountering the negative limit switch. Then, the direction is reversed to locate the Z-phase signal as the origin.

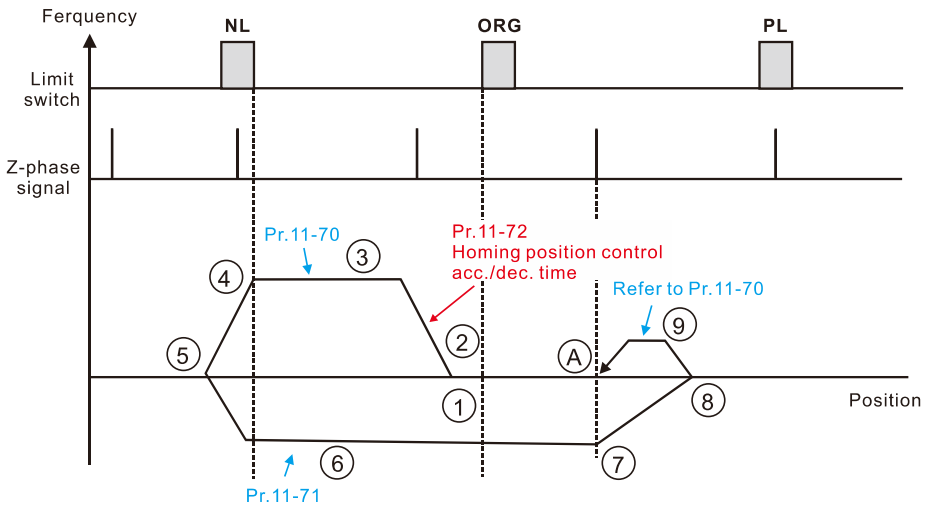

① REV Run for execute Homing position control function.
② Accelerate to Pr.11-70 Homing position control 1st step speed according to Pr.11-72 Homing control acc./dec. time.
③ Operating with Pr.11-70 Homing position control 1st step speed.
④ Deceleration according to Pr.11-72 after encountering the NL.
⑤ Decelerate to 0Hz and change operating direction. After, accelerate to Pr.11-71 Homing control 2nd step speed according to Pr.11-72.
⑥ Operating with Pr.11-71 Homing control 2nd step speed.
⑦ Deceleration according to Pr.11-72 after encountering the Z-phase signal.
⑧ Decelerate to 0Hz and change operating directions for search Z-phase signal.
⑨ Refer to Pr.11-70 Homing position control 1st step speed and start to execute creep speed.
Ⓐ Positioning in Z-phase signal completed.

Diagram 1

CiA402 Object 0x6098H	Z	Y	X	Function Description
Homing Method	Home Limit	Z-phase Signal Setting	Homing Mode	
1	-	0	1	Execute homing position control in the reverse direction until encountering the negative limit switch. Then, the direction is reversed to locate the Z-phase signal as the origin.

1. The initial movement is in the reverse direction.
2. When encountering the rising edge of the negative limit switch, the movement direction is reversed and waits for the falling-edge trigger of the negative limit switch.
3. Then, the movement locates the Z-phase signal in the forward direction and uses the Z-phase signal as the origin.

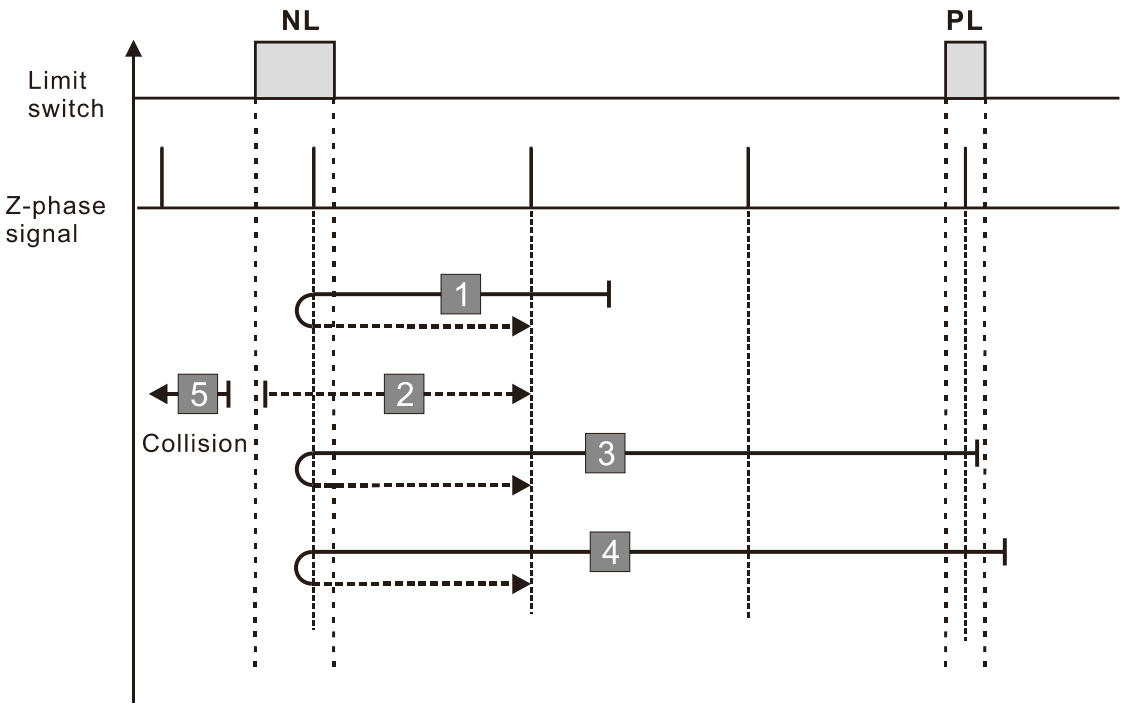

A homing failure occurs when the following conditions happen:

1. If the motor moves in the forward direction and encounters the positive limit switch signal, a homing failure occurs.
2. If no negative limit switch or Z-phase signal is encountered in the homing process mentioned above, and time-out is triggered, then a homing failure occurs.

Diagram 2

CiA402 Object 0x6098H	Z	Y	X	Function Description
Homing Method	Home Limit	Z-phase Signal Setting	Homing Mode	
2	-	0	0	Execute homing position control in the forward direction until encountering the positive limit switch. Then, the direction is reversed to locate the Z-phase signal as the origin.

1. The initial movement is in the forward direction.
2. When encountering the rising edge of the positive limit switch, the movement direction is reversed and waits for the falling-edge trigger of the positive limit switch.
3. Then, the movement locates the Z-phase signal in the reverse direction and uses the Z-phase signal as the origin.

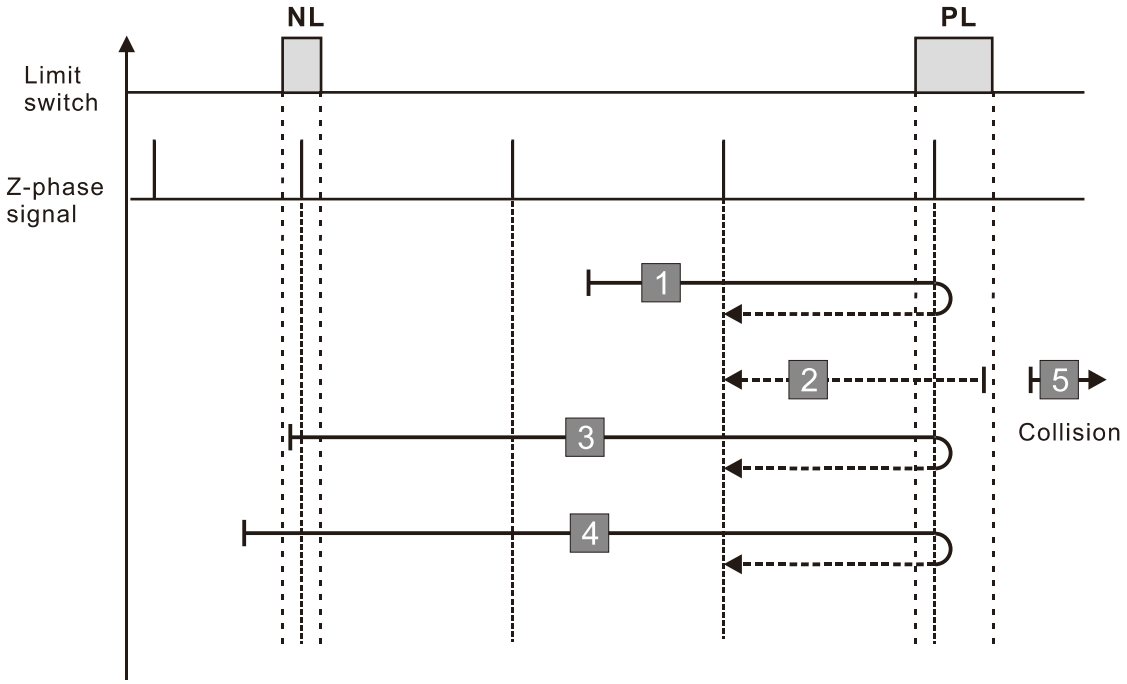

A homing failure occurs when the following conditions happen:

1. If the motor moves in the reverse direction and encounters the negative limit switch signal, a homing failure occurs.
2. If no positive limit switch or Z-phase signal is encountered in the homing process mentioned above, and time-out is triggered, then a homing failure occurs.

Diagram 3

CiA402 Object 0x6098H	Z	Y	X	Function Description
Homing Method	Home Limit	Z-phase Signal Setting	Homing Mode	
3	0	0	2	Execute homing position control in the forward direction until encountering the ORG switch (from 0 to 1). Then, the direction is reversed to locate the Z-phase signal as the origin. Stops when encountering the positive limit switch.

1. The initial movement direction depends on the ORG switch status. The initial movement is in the reverse direction if the ORG switch is active; the initial movement is in the forward direction if the ORG switch is inactive.
2. When moving in the forward direction and encountering the rising edge of the ORG switch, the movement direction is reversed and waits for the falling-edge trigger of the ORG switch.
3. Then, the movement locates the Z-phase signal in the reverse direction and uses the Z-phase signal as the origin.

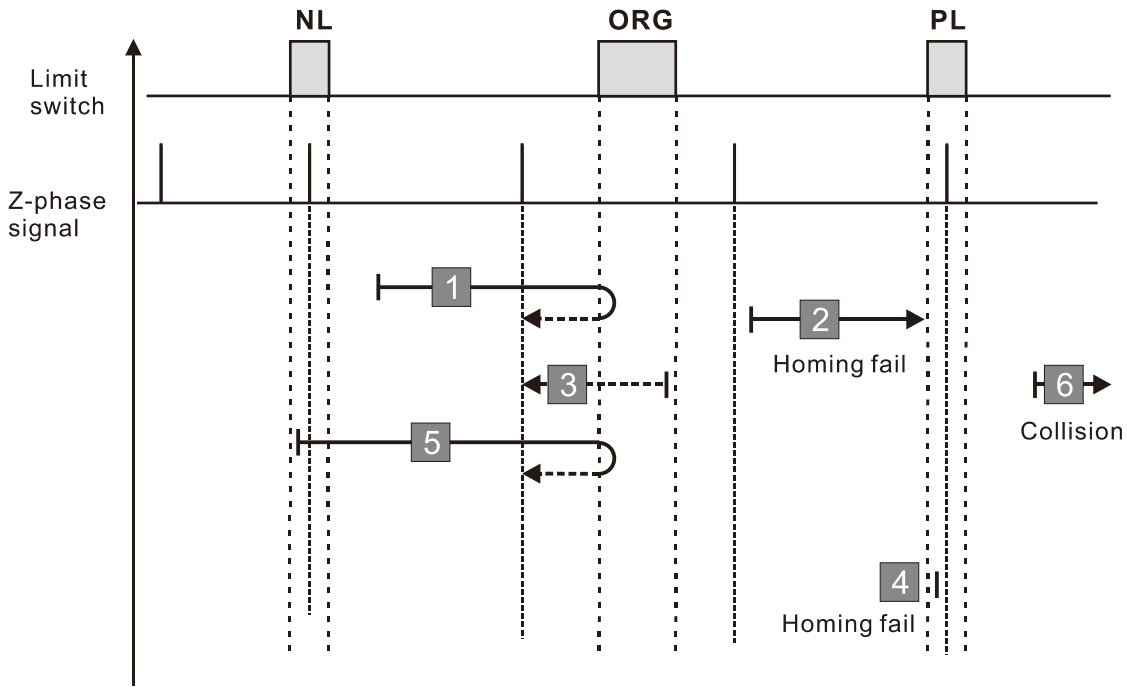

A homing failure occurs when the following conditions happen:

1. If the initial motor movement is in the forward direction and no falling edge of the ORG switch is encountered, a homing failure occurs.
2. If a positive or negative limit switch signal is encountered in the process of motor movement, a homing failure occurs.
3. If no ORG switch or Z-phase signal is encountered in the homing process mentioned above, and time-out is triggered, then a homing failure occurs.

Diagram 4

CiA402 Object 0x6098H	Z	Y	X	Function Description
Homing Method	Home Limit	Z-phase Signal Setting	Homing Mode	
4	0	1	2	Execute homing position control in the forward direction until encountering the ORG switch (from 0 to 1). Then, continue locating the Z-phase signal in the same direction as the origin. Stops when encountering the positive limit switch.

1. The initial movement direction depends on the ORG switch status. The initial movement is in the reverse direction if the ORG switch is active; the initial movement is in the forward direction if the ORG switch is inactive.
2. When moving in the reverser direction and encountering the falling edge of the ORG switch, the movement direction is reversed and waits for the rising-edge trigger of the ORG switch.
3. Then, the movement locates the Z-phase signal in the forward direction and uses the Z-phase signal as the origin.

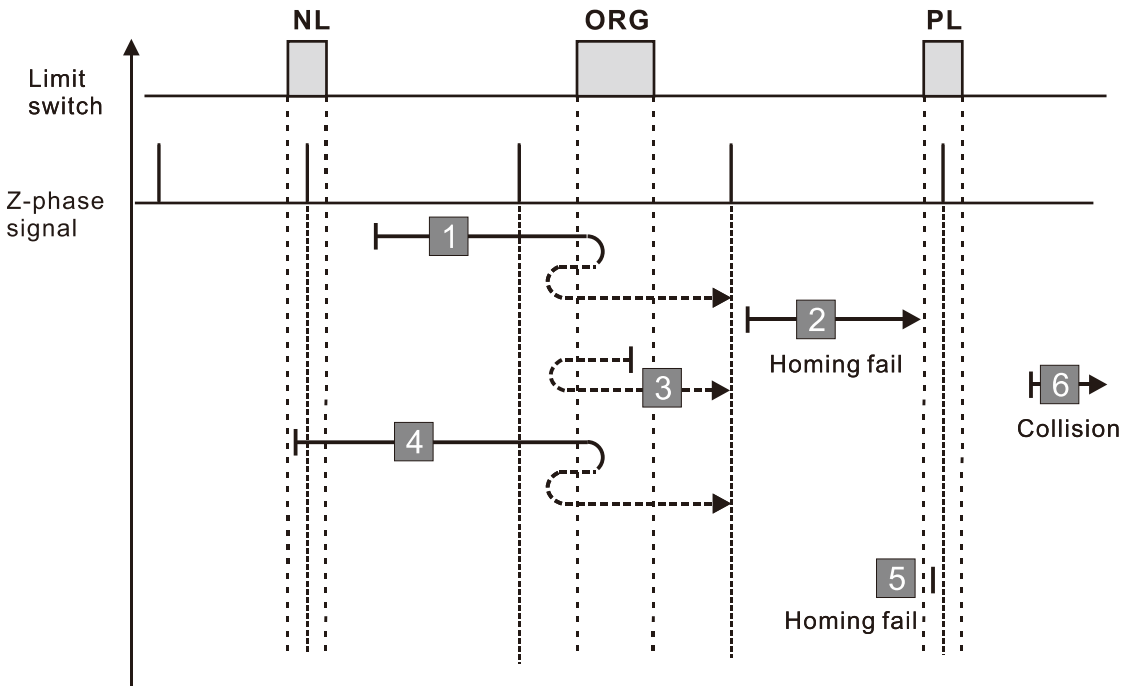

A homing failure occurs when the following conditions happen:

1. If the initial motor movement is in the reverse direction and no falling edge of the ORG switch is encountered, a homing failure occurs.
2. If a positive or negative limit switch signal is encountered in the process of motor movement, a homing failure occurs.
3. If no ORG switch or Z-phase signal is encountered in the homing process mentioned above, and time-out is triggered, then a homing failure occurs.

Diagram 5

CiA402 Object 0x6098H	Z	Y	X	Function Description
Homing Method	Home Limit	Z-phase Signal Setting	Homing Mode	
5	0	0	3	Execute homing position control in the reverse direction until encountering the ORG switch (from 0 to 1). Then, the direction is reversed to locate the Z-phase signal as the origin. Stops when encountering the negative limit switch.

1. The initial movement direction depends on the ORG switch status. The initial movement is in the forward direction if the ORG switch is active; the initial movement is in the reverse direction if the ORG switch is inactive.
2. When moving in the reverse direction and encountering the rising edge of the ORG switch, the movement direction is reversed and waits for the falling-edge trigger of the ORG switch.
3. Then, the movement locates the Z-phase signal in the forward direction and uses the Z-phase signal as the origin.

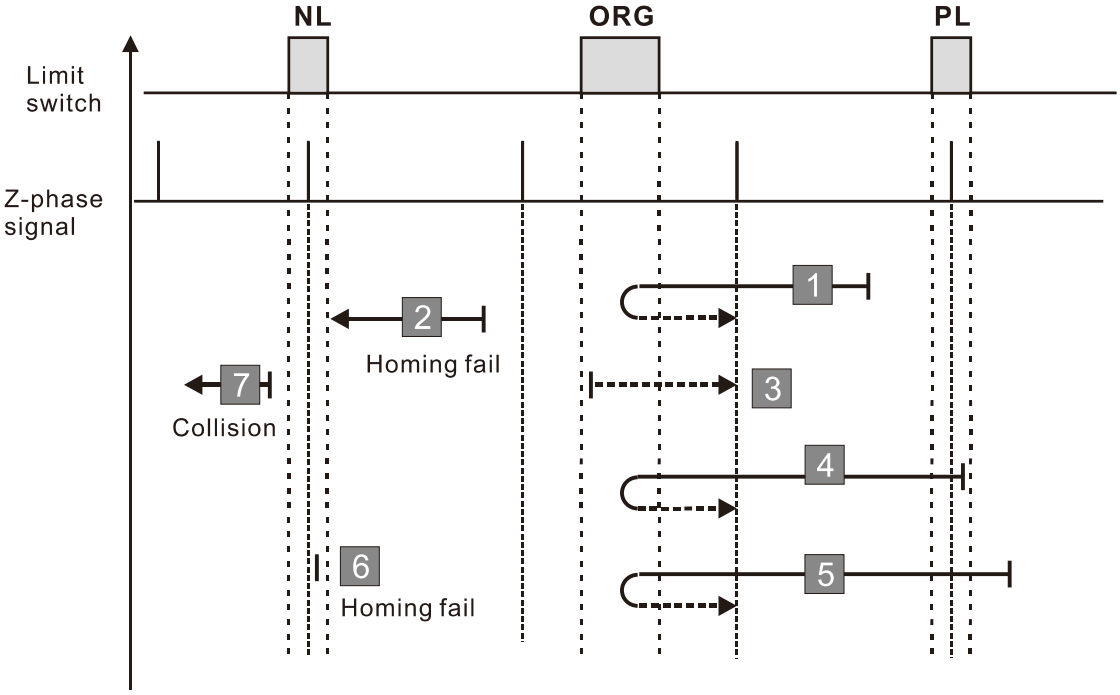

A homing failure occurs when the following conditions happen:

1. If the motor starts the movement in the reverse direction and no rising edge of the ORG switch is encountered, a homing failure occurs.
2. If a positive or negative limit switch signal is encountered in the process of motor movement, a homing failure occurs.
3. If no ORG switch or Z-phase signal is encountered in the homing process mentioned above, and time-out is triggered, then a homing failure occurs.

Diagram 6

CiA402 Object 0x6098H	Z	Y	X	Function Description
Homing Method	Home Limit	Z-phase Signal Setting	Homing Mode	
6	0	1	3	Execute homing position control in the reverse direction until encountering the ORG switch (from 0 to 1). Then, continue locating the Z-phase signal in the same direction as the origin. Stops when encountering the negative limit switch.

1. The initial movement direction depends on the ORG switch status. The initial movement is in the forward direction if the ORG switch is active; the initial movement is in the reverse direction if the ORG switch is inactive.
2. When moving in the forward direction and encountering the falling-edge of the ORG switch, the movement direction is reversed and waits for the rising-edge trigger of the ORG switch.
3. Then, the movement locates the Z-phase signal in the reverse direction and uses the Z-phase signal as the origin.

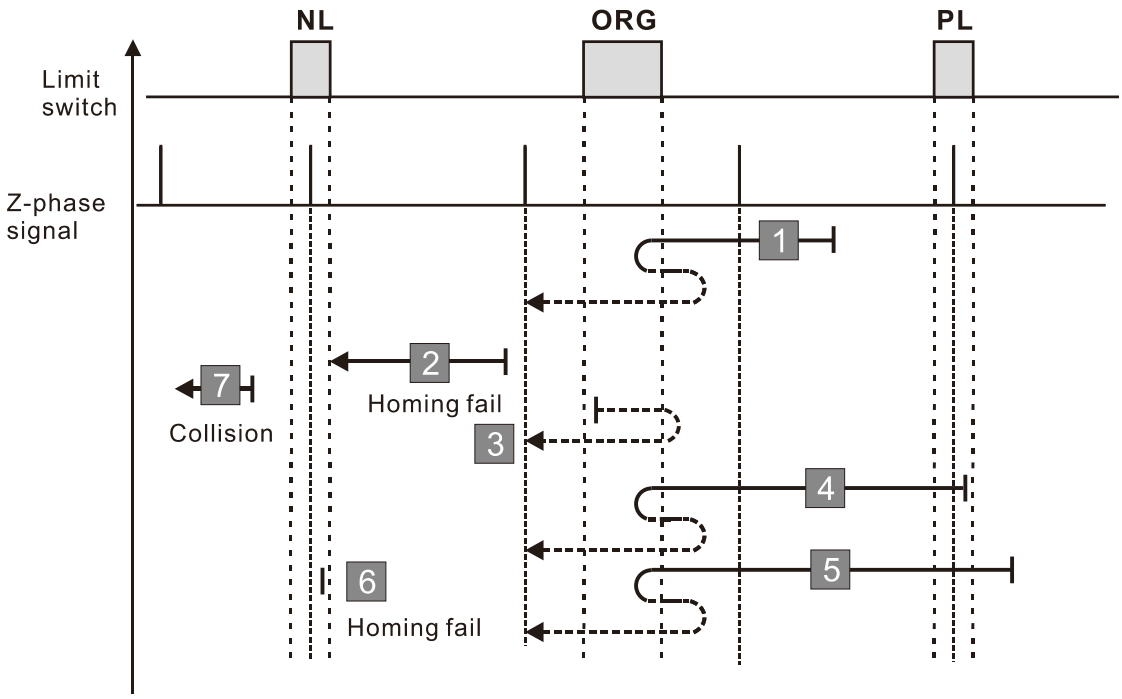

A homing failure occurs when the following conditions happen:

1. If the initial motor movement is in the forward direction and no falling edge of the ORG switch is encountered, a homing failure occurs.
2. If a positive or negative limit switch signal is encountered in the process of motor movement, a homing failure occurs.
3. If no ORG switch or Z-phase signal is encountered in the homing process mentioned above, and time-out is triggered, then a homing failure occurs.

Diagram 7

CiA402 Object 0x6098H	Z	Y	X	Function Description
Homing Method	Home Limit	Z-phase Signal Setting	Homing Mode	
7	1	0	2	Execute homing position control in the forward direction until encountering the ORG switch (from 0 to 1). Then, the direction is reversed to locate the Z-phase signal as the origin. When encountering the positive limit switch, the direction is reversed to locate the origin.

1. The initial movement direction depends on the ORG switch status. The initial movement is in the reverse direction if the ORG switch is active; the initial movement is in the forward direction if the ORG switch is inactive.
2. When moving in the forward direction and encountering the positive limit switch, the movement direction is reversed and waits for the falling-edge trigger of the positive limit switch.
3. When moving in the forward direction and encountering the rising edge of the ORG switch, the movement direction is reversed and waits for the falling-edge trigger of the ORG switch..
4. Then, the movement locates the Z-phase signal in the reverse direction and uses the Z-phase signal as the origin.

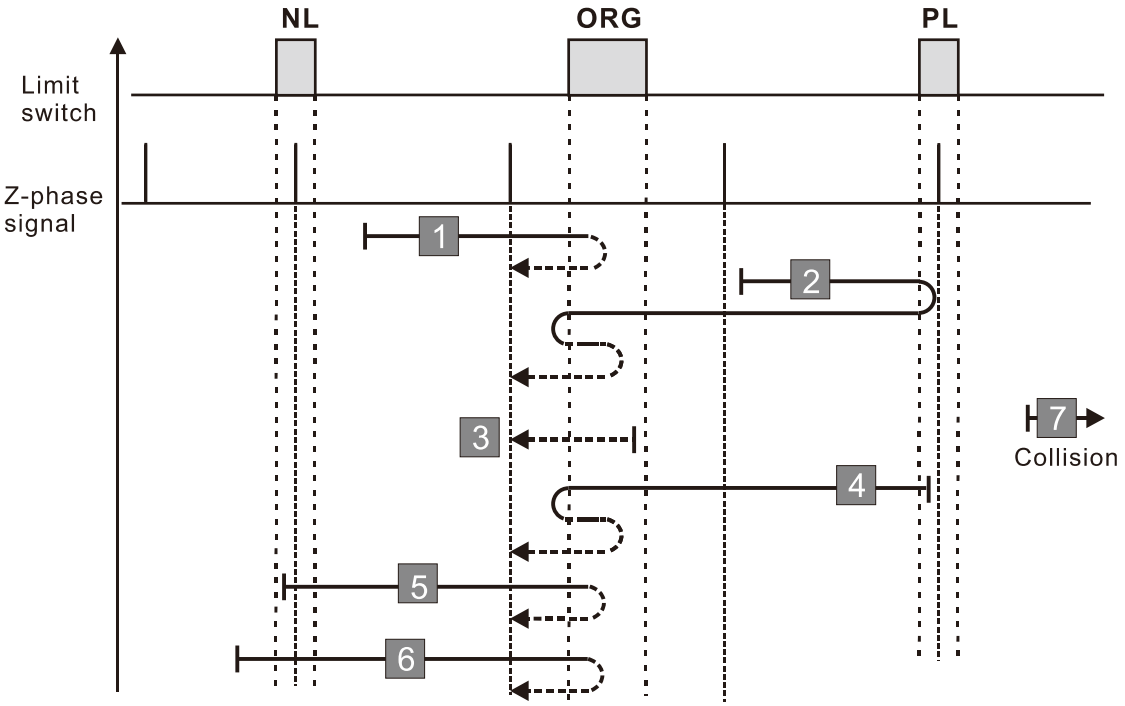

A homing failure occurs when the following conditions happen:

1. If a negative limit switch signal is encountered when the motor moves in the reverse direction, a homing failure occurs.
2. If no positive limit switch or Z-phase signal is encountered in the homing process mentioned above, and time-out is triggered, then a homing failure occurs.

Diagram 8

CiA402 Object 0x6098H	Z	Y	X	Function Description
Homing Method	Home Limit	Z-phase Signal Setting	Homing Mode	
8	1	1	2	Execute homing position control in the forward direction until encountering the ORG switch (from 0 to 1). Then, continue locating the Z-phase signal in the same direction as the origin. When encountering the positive limit switch, the direction is reversed to locate the origin.

1. The initial movement direction depends on the ORG switch status. The initial movement is in the reverse direction if the ORG switch is active; the initial movement is in the forward direction if the ORG switch is inactive.
2. When moving in the forward direction and encountering the positive limit switch, the movement direction is reversed and waits for the falling-edge trigger of the positive limit switch.
3. When moving in the reverse direction and encountering the falling edge of the ORG switch, the movement direction is reversed and waits for the rising-edge trigger of the ORG switch..
4. Then, the movement locates the Z-phase signal in the forward direction and uses the Z-phase signal as the origin.

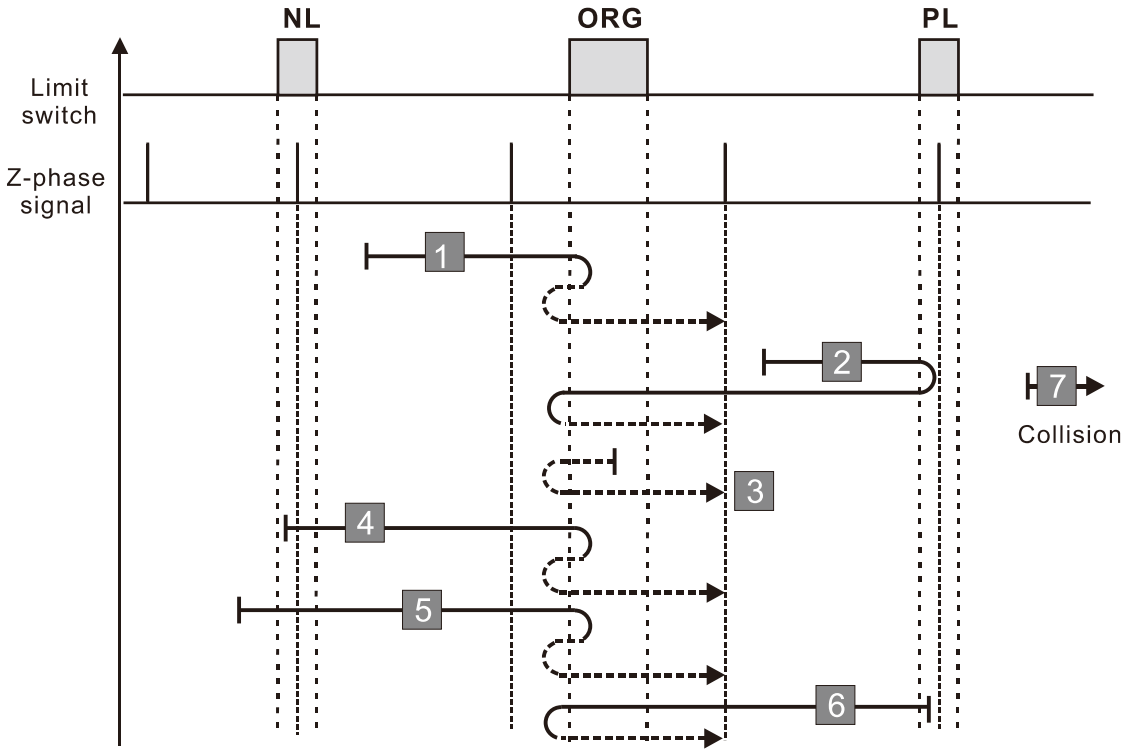

A homing failure occurs when the following conditions happen:

1. If a negative limit switch signal is encountered when the motor moves in the reverse direction, a homing failure occurs.
2. If no positive limit switch or Z-phase signal is encountered in the homing process mentioned above, and time-out is triggered, then a homing failure occurs.

Diagram 9

CiA402 Object 0x6098H	Z	Y	X	Function Description
Homing Method	Home Limit	Z-phase Signal Setting	Homing Mode	
9	1	0	6	Execute homing position control in the forward direction until encountering the ORG switch (from 1 to 0). Then, the direction is reversed to locate the Z-phase signal as the origin. When encountering the positive limit switch, the direction is reversed to locate the origin.

1. The initial movement is in the forward direction.
2. When moving in the forward direction and encountering the positive limit switch, the movement direction is reversed and waits for the falling-edge trigger of the positive limit switch.
3. When moving in the forward direction and encountering the falling edge of the ORG switch, the movement direction is reversed and waits for the rising-edge trigger of the ORG switch..
4. Then, the movement locates the Z-phase signal in the reverse direction and uses the Z-phase signal as the origin.

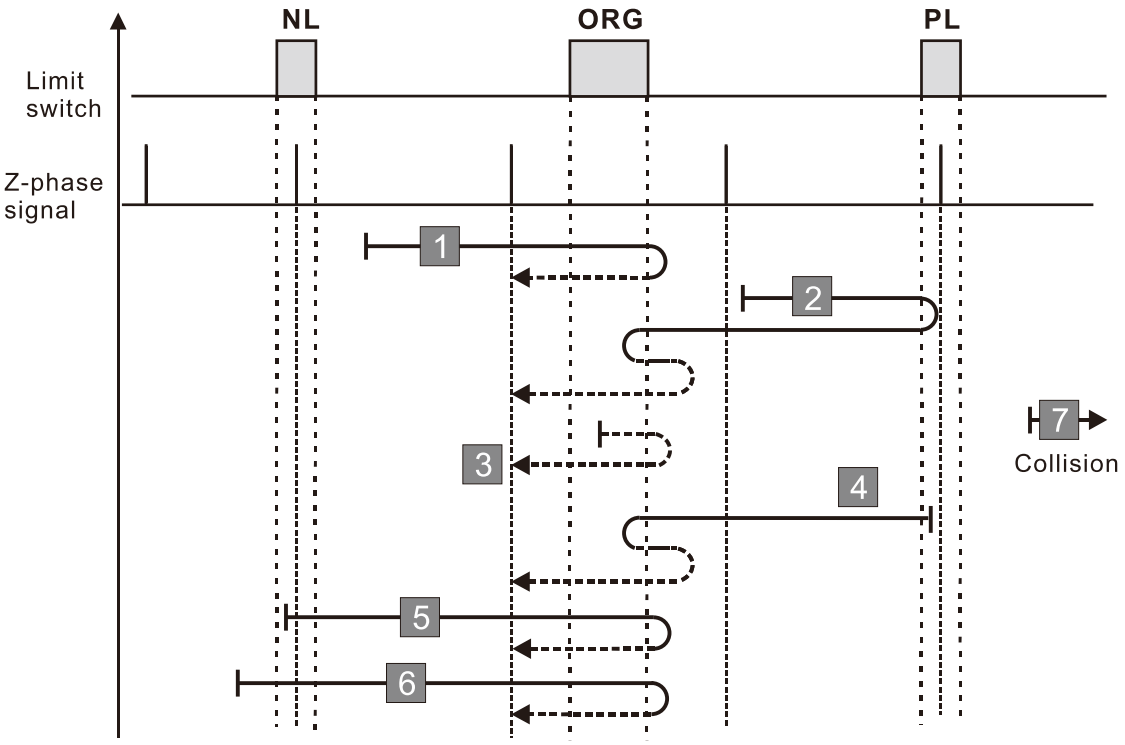

A homing failure occurs when the following conditions happen:

1. If a negative limit switch signal is encountered when the motor moves in the reverse direction, a homing failure occurs.
2. If no positive limit switch or Z-phase signal is encountered in the homing process mentioned above, and time-out is triggered, then a homing failure occurs.

Diagram 10

CiA402 Object 0x6098H	Z	Y	X	Function Description
Homing Method	Home Limit	Z-phase Signal Setting	Homing Mode	
10	1	1	6	Execute homing position control in the forward direction until encountering the ORG switch (from 1 to 0). Then, continue locating the Z-phase signal in the same direction as the origin. When encountering the positive limit switch, the direction is reversed to locate the origin.

1. The initial movement is in the forward direction.
2. When moving in the forward direction and encountering the positive limit switch, the movement direction is reversed and waits for the falling-edge trigger of the positive limit switch.
3. When moving in the reverse direction and encountering the rising edge of the ORG switch, the movement direction is reversed and waits for the falling-edge trigger of the ORG switch.
4. Then, the movement locates the Z-phase signal in the forward direction and uses the Z-phase signal as the origin.

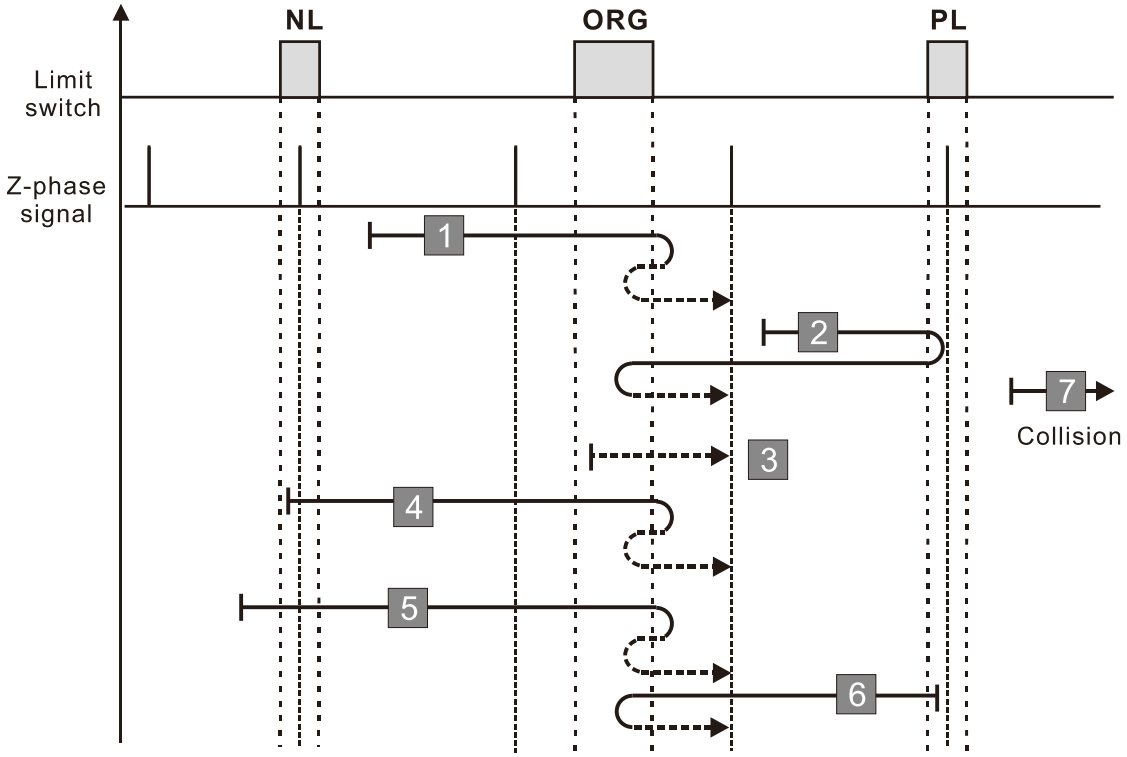

A homing failure occurs when the following conditions happen:

1. If a negative limit switch signal is encountered when the motor moves in the reverse direction, a homing failure occurs.
2. If no positive limit switch or Z-phase signal is encountered in the homing process mentioned above, and time-out is triggered, then a homing failure occurs.

Diagram 11

CiA402 Object 0x6098H	Z	Y	X	Function Description
Homing Method	Home Limit	Z-phase Signal Setting	Homing Mode	
11	1	0	3	Execute homing position control in the reverse direction until encountering the ORG switch (from 0 to 1). Then, the direction is reversed to locate the Z-phase signal as the origin. When encountering the negative limit switch, the direction is reversed to locate the origin.

1. The initial movement direction depends on the ORG switch status. The initial movement is in the reverse direction if the ORG switch is active; the initial movement is in the forward direction if the ORG switch is inactive.
2. When moving in the reverse direction and encountering the negative limit switch, the movement direction is reversed and waits for the falling-edge trigger of the negative limit switch.
3. When moving in the reverse direction and encountering the rising edge of the ORG switch, the movement direction is reversed and waits for the falling-edge trigger of the ORG switch.
4. Then, the movement locates the Z-phase signal in the forward direction and uses the Z-phase signal as the origin.

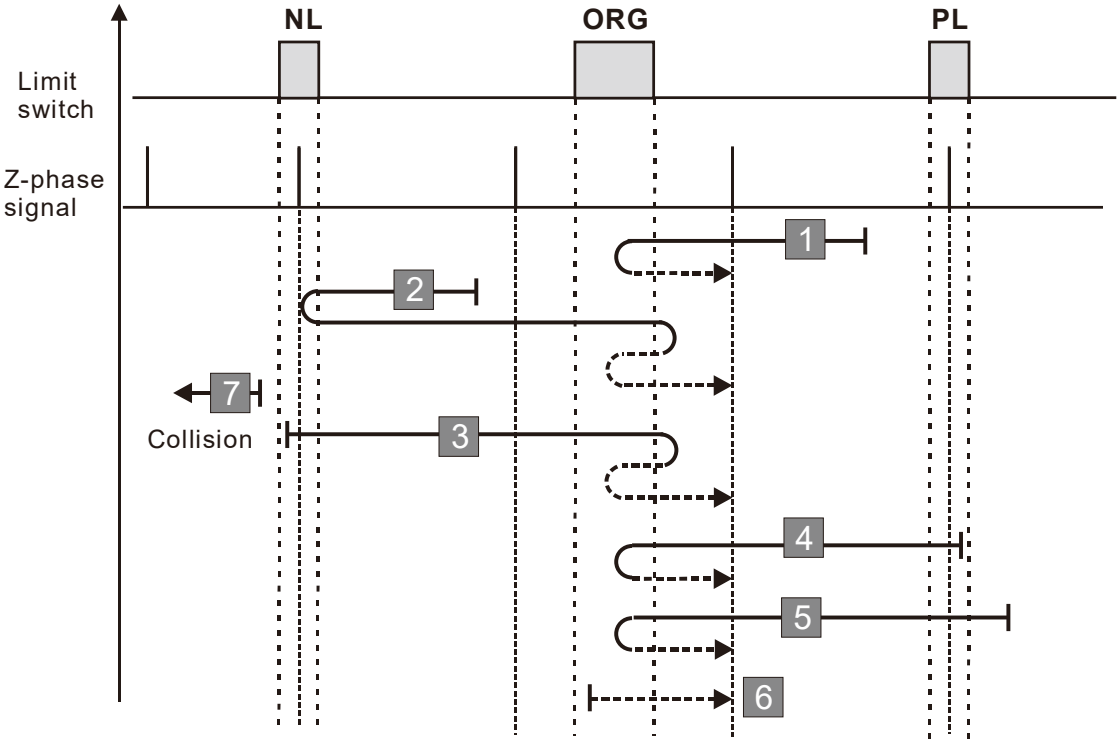

A homing failure occurs when the following conditions happen:

1. If a positive limit switch signal is encountered when the motor moves in the forward direction, a homing failure occurs.
2. If no negative limit switch or Z-phase signal is encountered in the homing process mentioned above, and time-out is triggered, then a homing failure occurs.

Diagram 12

CiA402 Object 0x6098H	Z	Y	X	Function Description
Homing Method	Home Limit	Z-phase Signal Setting	Homing Mode	
12	1	1	3	Execute homing position control in the reverse direction until encountering the ORG switch (from 0 to 1). Then, continue locating the Z-phase signal in the same direction as the origin. When encountering the negative limit switch, the direction is reversed to locate the origin.

1. The initial movement direction depends on the ORG switch status. The initial movement is in the reverse direction if the ORG switch is active; the initial movement is in the forward direction if the ORG switch is inactive.
2. When moving in the reverse direction and encountering the negative limit switch, the movement direction is reversed and waits for the falling-edge trigger of the negative limit switch.
3. When moving in the forward direction and encountering the falling edge of the ORG switch, the movement direction is reversed and waits for the rising-edge trigger of the ORG switch.
4. Then, the movement locates the Z-phase signal in the reverse direction and uses the Z-phase signal as the origin.

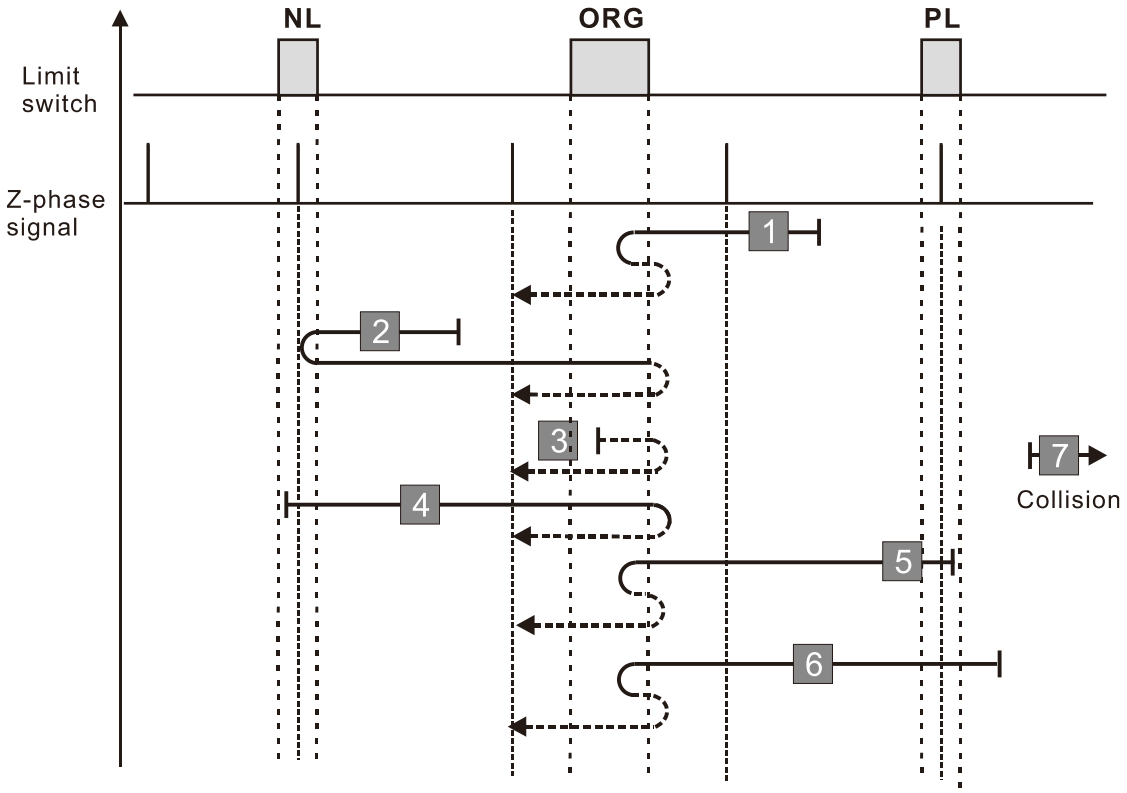

A homing failure occurs when the following conditions happen:

1. If a positive limit switch signal is encountered when the motor moves in the forward direction, a homing failure occurs.
2. If no negative limit switch or Z-phase signal is encountered in the homing process mentioned above, and time-out is triggered, then a homing failure occurs.

Diagram 13

CiA402 Object 0x6098H	Z	Y	X	Function Description
Homing Method	Home Limit	Z-phase Signal Setting	Homing Mode	
13	1	0	7	Execute homing position control in the reverse direction until encountering the ORG switch (from 1 to 0). Then, the direction is reversed to locate the Z-phase signal as the origin. When encountering the negative limit switch, the direction is reversed to locate the origin.

1. The initial movement is in the reverse direction.
2. When moving in the reverse direction and encountering the negative limit switch, the movement direction is reversed and waits for the falling-edge trigger of the negative limit switch.
3. When moving in the reverse direction and encountering the falling edge of the ORG switch, the movement direction is reversed and waits for the rising-edge trigger of the ORG switch.
4. Then, the movement locates the Z-phase signal in the forward direction and uses the Z-phase signal as the origin

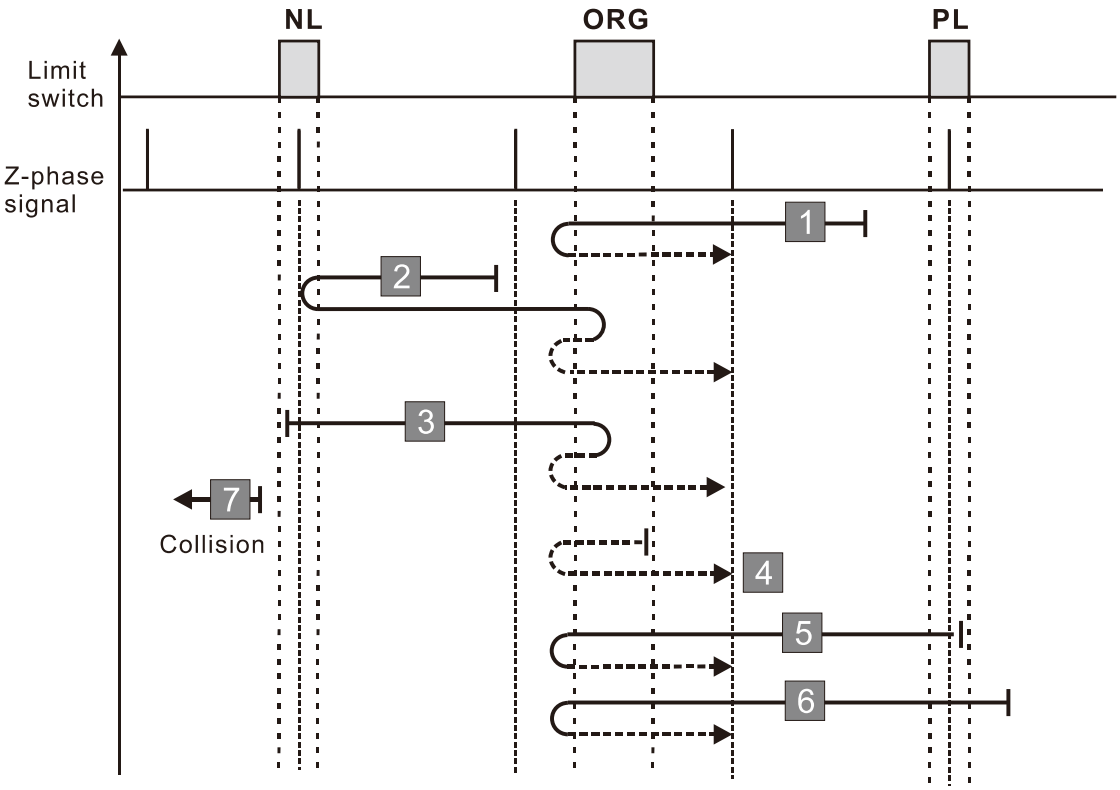

A homing failure occurs when the following conditions happen:

1. If a positive limit switch signal is encountered when the motor moves in the forward direction, a homing failure occurs.
2. If no negative limit switch or Z-phase signal is encountered in the homing process mentioned above, and time-out is triggered, then a homing failure occurs.

Diagram 14

CiA402 Object 0x6098H	Z	Y	X	Function Description
Homing Method	Home Limit	Z-phase Signal Setting	Homing Mode	
14	1	1	7	Execute homing position control in the reverse direction until encountering the ORG switch (from 1 to 0). Then, continue locating the Z-phase signal in the same direction as the origin. When encountering the negative limit switch, the direction is reversed to locate the origin.

1. The initial movement is in the reverse direction.
2. When moving in the reverse direction and encountering the negative limit switch, the movement direction is reversed and waits for the falling-edge trigger of the negative limit switch.
3. When moving in the forward direction and encountering the rising edge of the ORG switch, the movement direction is reversed and waits for the falling-edge trigger of the ORG switch.
4. Then, the movement locates the Z-phase signal in the reverse direction and uses the Z-phase signal as the origin.

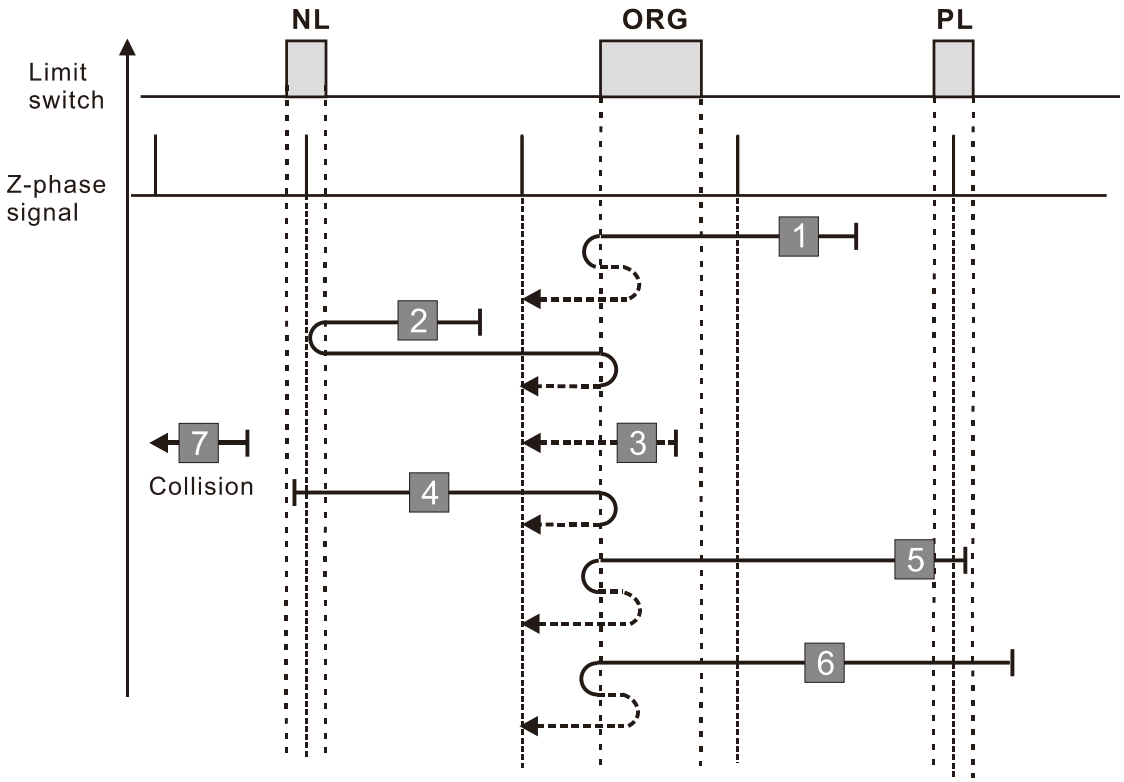

A homing failure occurs when the following conditions happen:

1. If a positive limit switch signal is encountered when the motor moves in the forward direction, a homing failure occurs.
2. If no negative limit switch or Z-phase signal is encountered in the homing process mentioned above, and time-out is triggered, then a homing failure occurs.

Diagram 15

CiA402 Object 0x6098H	Z	Y	X	Function Description
Homing Method	Home Limit	Z-phase Signal Setting	Homing Mode	
17	-	2	1	Execute homing position control in the reverse direction and use the negative limit switch as the origin.

1. The initial movement is in the reverse direction.
2. When encountering the rising edge of the negative limit switch, the movement direction is reversed and waits for the falling-edge trigger of the negative limit switch as the origin.

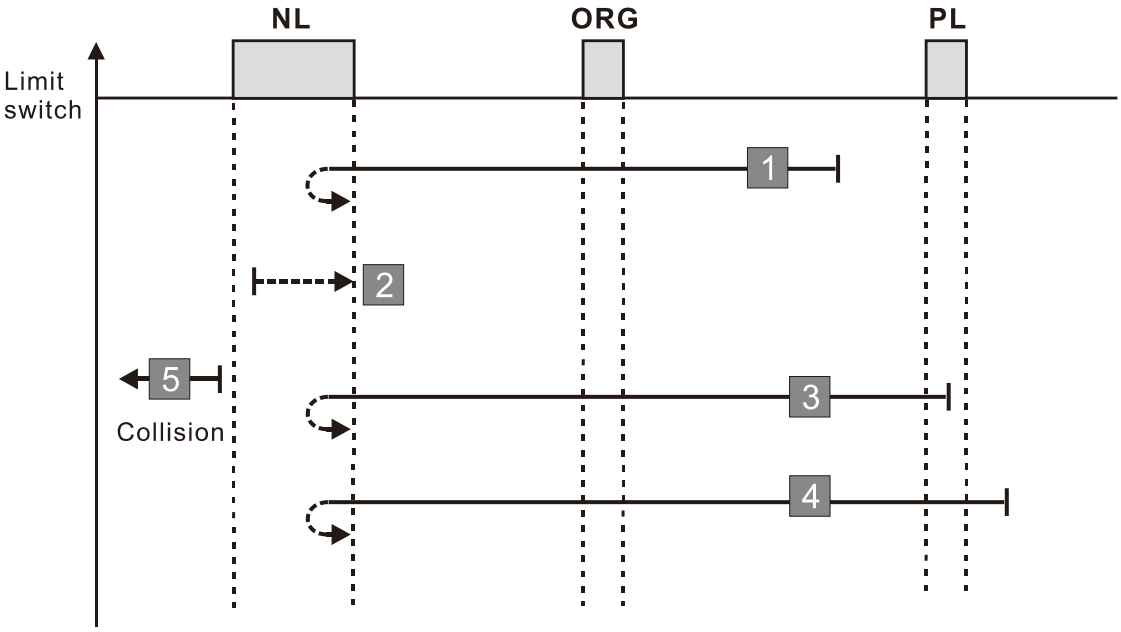

A homing failure occurs when the following conditions happen:

1. If a positive limit switch signal is encountered when the motor moves in the forward direction, a homing failure occurs.
2. If no negative limit switch signal is encountered in the homing process mentioned above, and time-out is triggered, then a homing failure occurs.

Diagram 16

CiA402 Object 0x6098H	Z	Y	X	Function Description
Homing Method	Home Limit	Z-phase Signal Setting	Homing Mode	
18	-	2	0	Execute homing position control in the forward direction and use the positive limit switch as the origin.

1. The initial movement is in the forward direction.
2. When encountering the rising edge of the positive limit switch, the movement direction is reversed and waits for the falling-edge trigger of the positive limit switch as the origin.

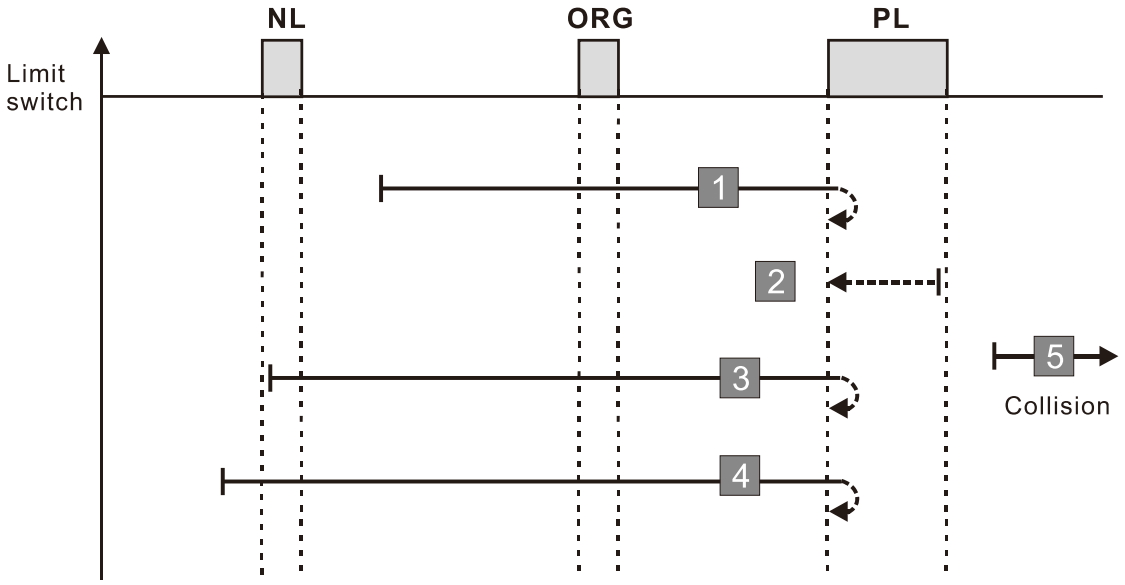

A homing failure occurs when the following conditions happen:

1. If a negative limit switch signal is encountered when the motor moves in the reverse direction, a homing failure occurs.
2. If no positive limit switch signal is encountered in the homing process mentioned above, and time-out is triggered, then a homing failure occurs.

Diagram 17

CiA402 Object 0x6098H	Z	Y	X	Function Description
Homing Method	Home Limit	Z-phase Signal Setting	Homing Mode	
19	No correspondence			See the diagram for homing method 19

1. The initial movement direction depends on the ORG switch status. The initial movement is in the reverse direction if the ORG switch is active; the initial movement is in the forward direction if the ORG switch is inactive.
2. When moving in the forward direction and encountering the rising edge of the ORG switch, the movement direction is reversed.
3. Then, wait for the falling-edge trigger of the ORG switch as the origin.

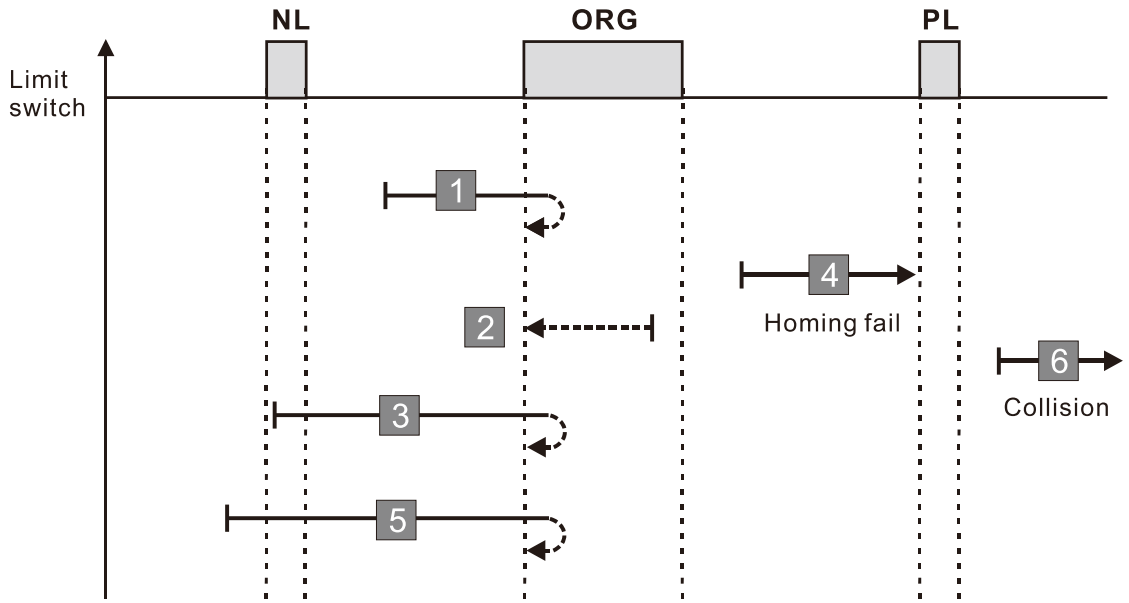

A homing failure occurs when the following conditions happen:

1. If the initial motor movement is in the forward direction and no falling edge of the ORG switch is encountered, a homing failure occurs.
2. If a positive or negative limit switch signal is encountered in the process of motor movement, a homing failure occurs.
3. If no ORG switch signal is encountered in the homing process mentioned above, and time-out is triggered, then a homing failure occurs.

Diagram 18

CiA402 Object 0x6098H	Z	Y	X	Function Description
Homing Method	Home Limit	Z-phase Signal Setting	Homing Mode	
20	0	2	2	Execute homing position control in the forward direction and use the ORG switch (from 0 to 1) as the origin. Stops when encountering the positive limit switch.

1. The initial movement direction depends on the ORG switch status. The initial movement is in the reverse direction if the ORG switch is active; the initial movement is in the forward direction if the ORG switch is inactive.
2. When moving in the reverse direction and encountering the falling edge of the ORG switch, the movement direction is reversed.
3. Then, wait for the rising-edge trigger of the ORG switch as the origin.

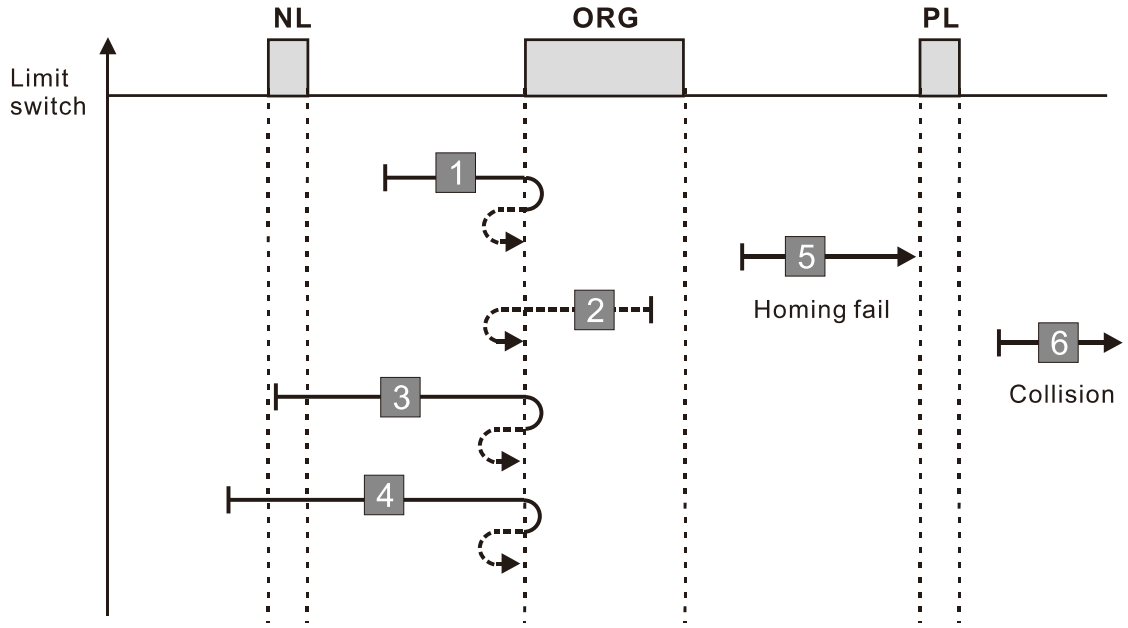

A homing failure occurs when the following conditions happen:

1. If the initial motor movement is in the reverse direction and no falling edge of the ORG switch is encountered, a homing failure occurs.
2. If a positive or negative limit switch signal is encountered in the process of motor movement, a homing failure occurs.
3. If no ORG switch signal is encountered in the homing process mentioned above, and time-out is triggered, then a homing failure occurs.

Diagram 19

CiA402 Object 0x6098H	Z	Y	X	Function Description
Homing Method	Home Limit	Z-phase Signal Setting	Homing Mode	
21	No correspondence			See the diagram 19 for homing method 21

1. The initial movement direction depends on the ORG switch status. The initial movement is in the forward direction if the ORG switch is active; the initial movement is in the reverse direction if the ORG switch is inactive.
2. When moving in the reverse direction and encountering the rising edge of the ORG switch, the movement direction is reversed.
3. Then, water for the falling-edge trigger of the ORG switch as the origin.

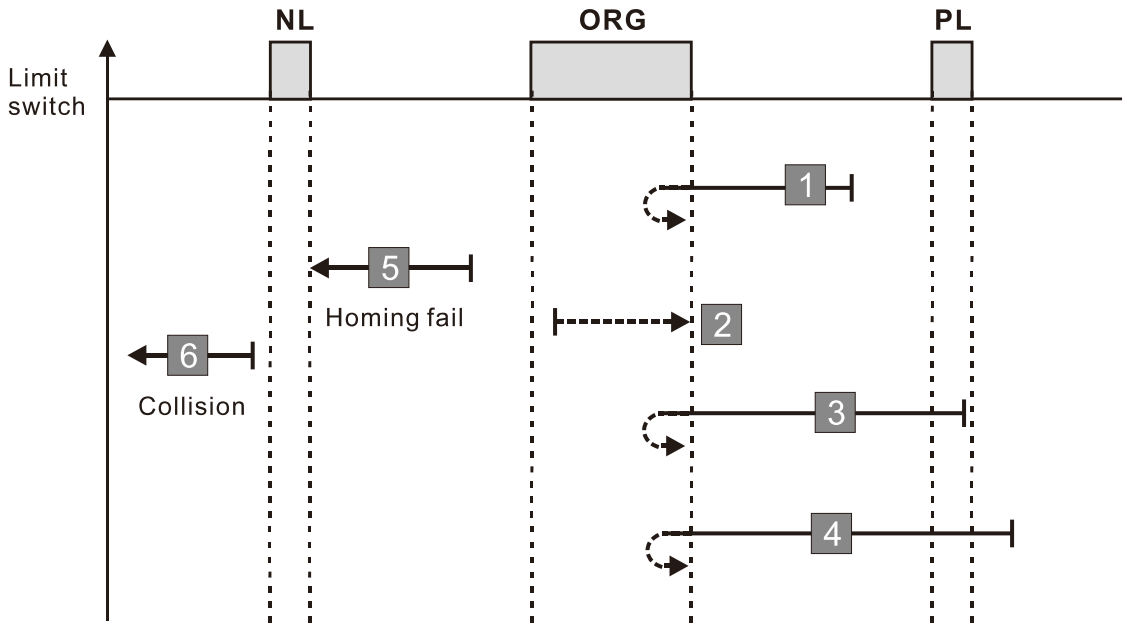

A homing failure occurs when the following conditions happen:

1. If the initial motor movement is in the reverse direction and no rising edge of the ORG switch is encountered, a homing failure occurs.
2. If a positive or negative limit switch signal is encountered in the process of motor movement, a homing failure occurs.
3. If no ORG switch signal is encountered in the homing process mentioned above, and time-out is triggered, then a homing failure occurs.

Diagram 20

CiA402 Object 0x6098H	Z	Y	X	Function Description
Homing Method	Home Limit	Z-phase Signal Setting	Homing Mode	
22	0	2	3	Execute homing position control in the reverse direction and use the ORG switch (from 0 to 1) as the origin. Stops when encountering the negative limit switch.

1. The initial movement direction depends on the ORG switch status. The initial movement is in the forward direction if the ORG switch is active; the initial movement is in the reverse direction if the ORG switch is inactive.
2. When moving in the forward direction and encountering the falling edge of the ORG switch, the movement direction is reversed.
3. Then, wait for the rising-edge trigger of the ORG switch as the origin.

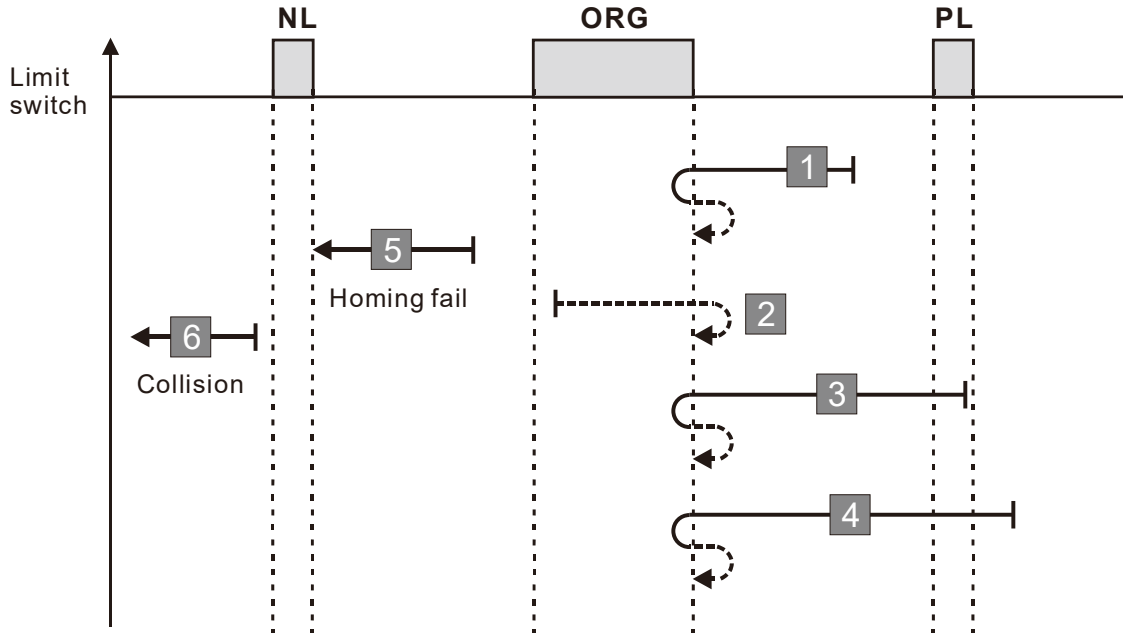

A homing failure occurs when the following conditions happen:

1. If the initial motor movement is in the forward direction and no falling edge of the ORG switch is encountered, a homing failure occurs.
2. If a positive or negative limit switch signal is encountered in the process of motor movement, a homing failure occurs.
3. If no ORG switch signal is encountered in the homing process mentioned above, and time-out is triggered, then a homing failure occurs.

Diagram 21

CiA402 Object 0x6098H	Z	Y	X	Function Description
Homing Method	Home Limit	Z-phase Signal Setting	Homing Mode	
23	No correspondence			See the diagram for homing method 23

1. The initial movement direction depends on the ORG switch status. The initial movement is in the reverse direction if the ORG switch is active; the initial movement is in the forward direction if the ORG switch is inactive.
2. When moving in the forward direction and encountering the positive limit switch, the movement direction is reversed and waits for the falling-edge trigger of the positive limit switch.
3. When moving in the forward direction and encountering the rising edge of the ORG switch, the movement direction is reversed.
4. Then, wait for the falling-edge trigger of the ORG switch as the origin.

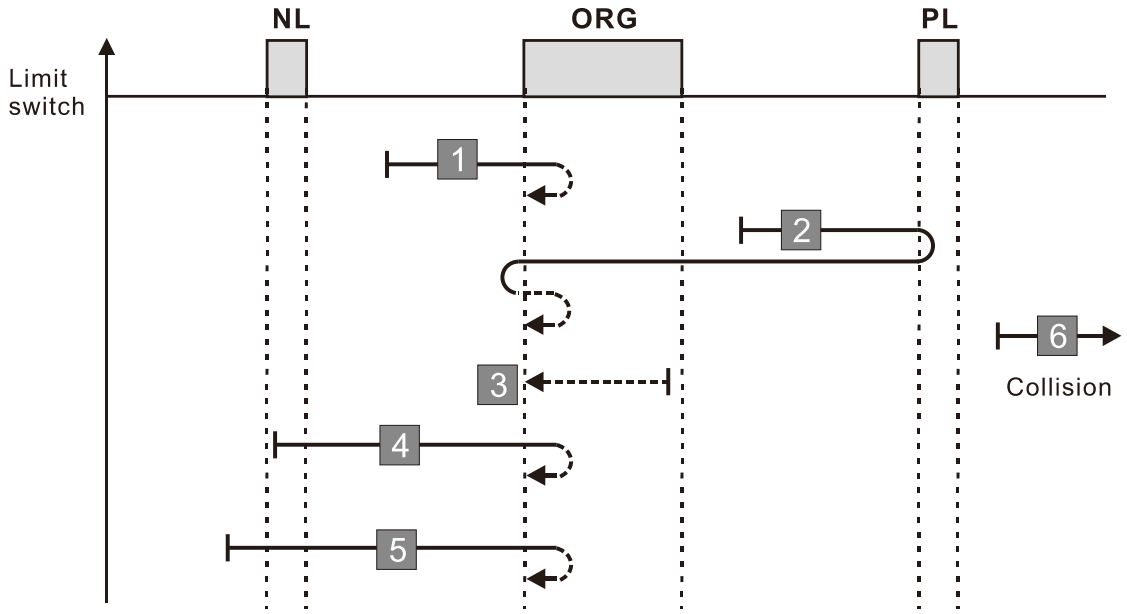

A homing failure occurs when the following conditions happen:

1. If a negative limit switch signal is encountered when the motor moves in the reverse direction, a homing failure occurs.
2. If no positive limit switch signal is encountered in the homing process mentioned above, and time-out is triggered, then a homing failure occurs.

Diagram 22

CiA402 Object 0x6098H	Z	Y	X	Function Description
Homing Method	Home Limit	Z-phase Signal Setting	Homing Mode	
24	1	2	2	Execute homing position control in the forward direction and use the ORG switch (from 0 to 1) as the origin. When encountering the positive limit switch, the direction is reversed to the locate the origin.

1. The initial movement direction depends on the ORG switch status. The initial movement is in the reverse direction if the ORG switch is active; the initial movement is in the forward direction if the ORG switch is inactive.
2. When moving in the forward direction and encountering the positive limit switch, the movement direction is reversed and waits for the falling-edge trigger of the positive limit switch.
3. When moving in the reverse direction and encountering the falling edge of the ORG switch, the movement direction is reversed.
4. Then, wait for the rising-edge trigger of the ORG switch as the origin.

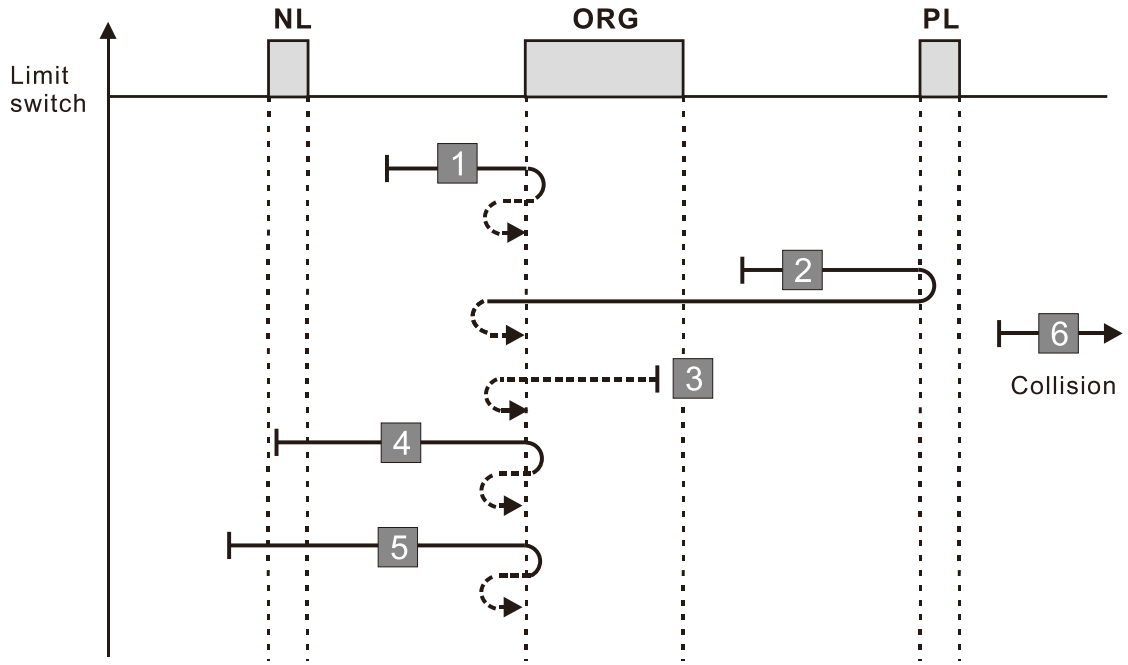

A homing failure occurs when the following conditions happen:

1. If a negative limit switch signal is encountered when the motor moves in the reverse direction, a homing failure occurs.
2. If no positive limit switch signal is encountered in the homing process mentioned above, and time-out is triggered, then a homing failure occurs.

Diagram 23

CiA402 Object 0x6098H	Z	Y	X	Function Description
Homing Method	Home Limit	Z-phase Signal Setting	Homing Mode	
25	No correspondence			See the diagram for homing method 25

1. The initial movement is in the forward direction.
2. When moving in the forward direction and encountering the positive limit switch, the movement direction is reversed and waits for the falling-edge trigger of the positive limit switch.
3. When moving in the forward direction and encountering the falling edge of the ORG switch, the movement direction is reversed.
4. Then, wait for the rising-edge trigger of the ORG switch as the origin.

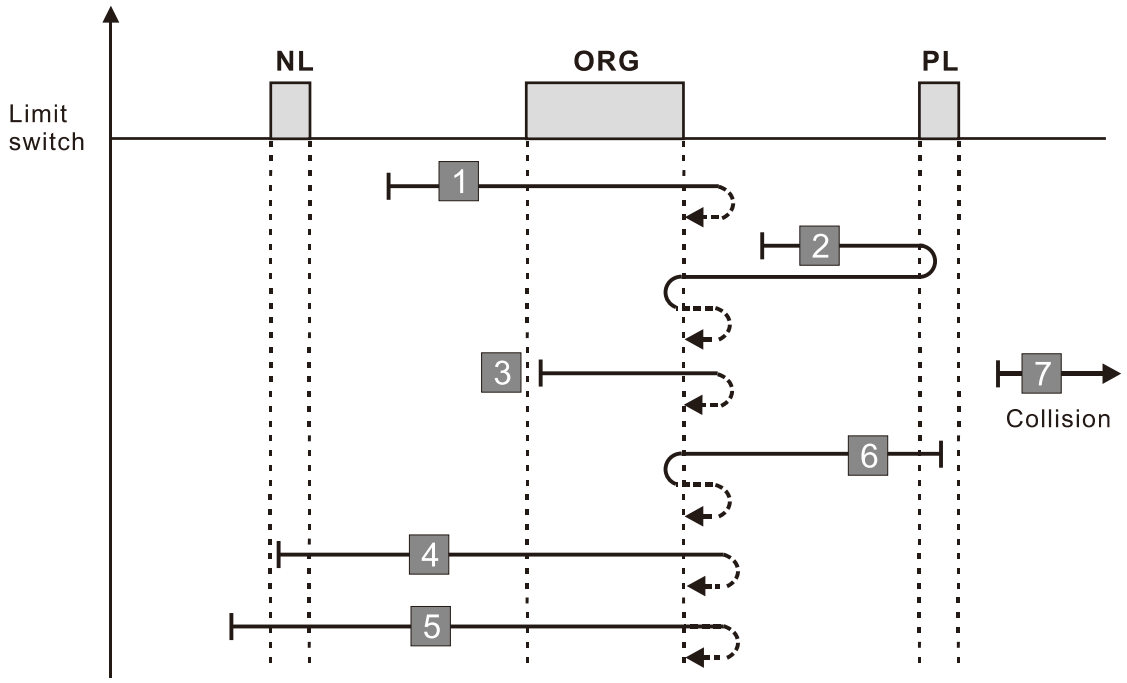

A homing failure occurs when the following conditions happen:

1. If a negative limit switch signal is encountered when the motor moves in the reverse direction, a homing failure occurs.
2. If no positive limit switch signal is encountered in the homing process mentioned above, and time-out is triggered, then a homing failure occurs.

Diagram 24

CiA402 Object 0x6098H	Z	Y	X	Function Description
Homing Method	Home Limit	Z-phase Signal Setting	Homing Mode	
26	1	2	6	Execute homing position control in the forward direction and use the ORG switch (from 1 to 0) as the origin. When encountering the positive limit switch, the direction is reversed to locate the origin.

1. The initial movement is in the forward direction.
2. When moving the in the forward direction and encountering the positive limit switch, the movement direction is reversed and waits for the falling-edge trigger of the positive limit switch.
3. When moving in the reverse direction and encountering the rising edge of the ORG switch, the movement direction is reversed.
4. Then, wait for the falling-edge trigger of the ORG switch as the origin.

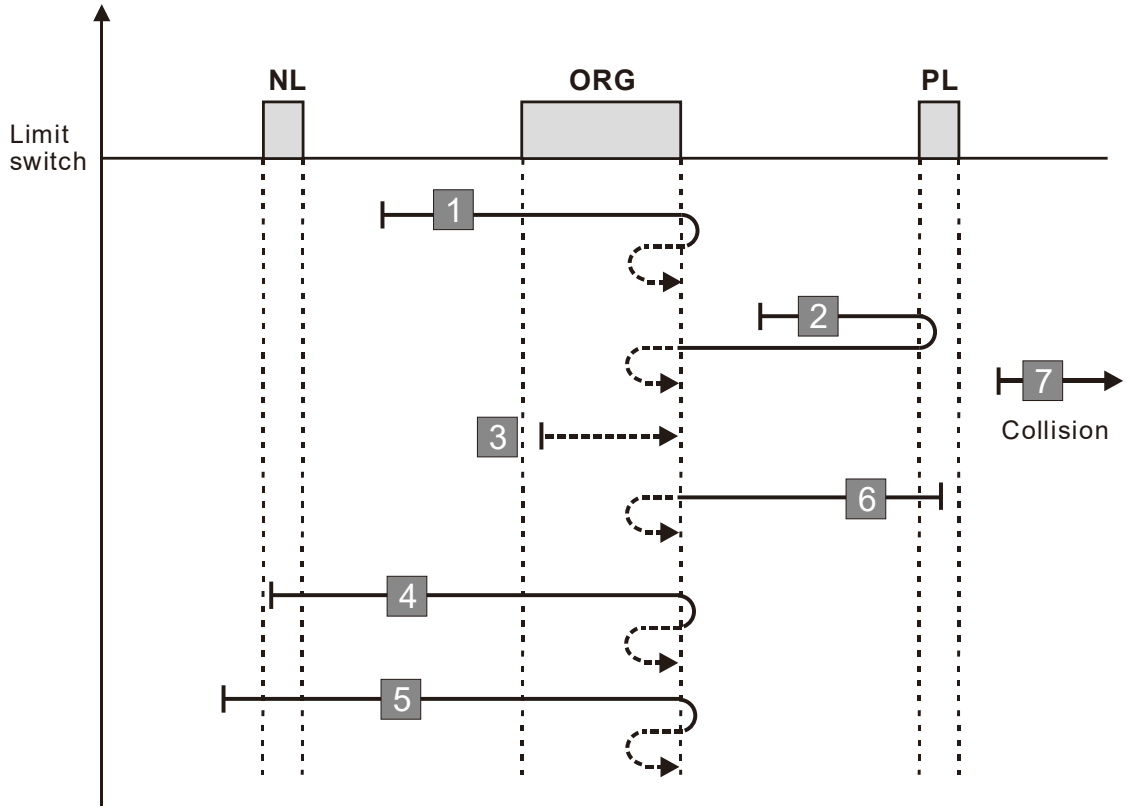

A homing failure occurs when the following conditions happen:

1. If a negative limit switch signal is encountered when the motor moves in the reverse direction, a homing failure occurs.
2. If no positive limit switch signal is encountered in the homing process mentioned above, and time-out is triggered, then a homing failure occurs.

Diagram 25

CiA402 Object 0x6098H	Z	Y	X	Function Description
Homing Method	Home Limit	Z-phase Signal Setting	Homing Mode	
27	No correspondence			See the diagram for homing method 27

1. The initial movement direction depends on the ORG switch status. The initial movement is in the forward direction if the ORG switch is active; the initial movement is in the reverse direction if the ORG switch is inactive.
2. When moving in the reverse direction and encountering the negative limit switch, the movement direction is reversed and waits for the falling-edge trigger of the negative limit switch.
3. When moving in the reverse direction and encountering the rising edge of the ORG switch, the movement direction is reversed.
4. Then, wait for the falling-edge trigger of the ORG switch as the origin.

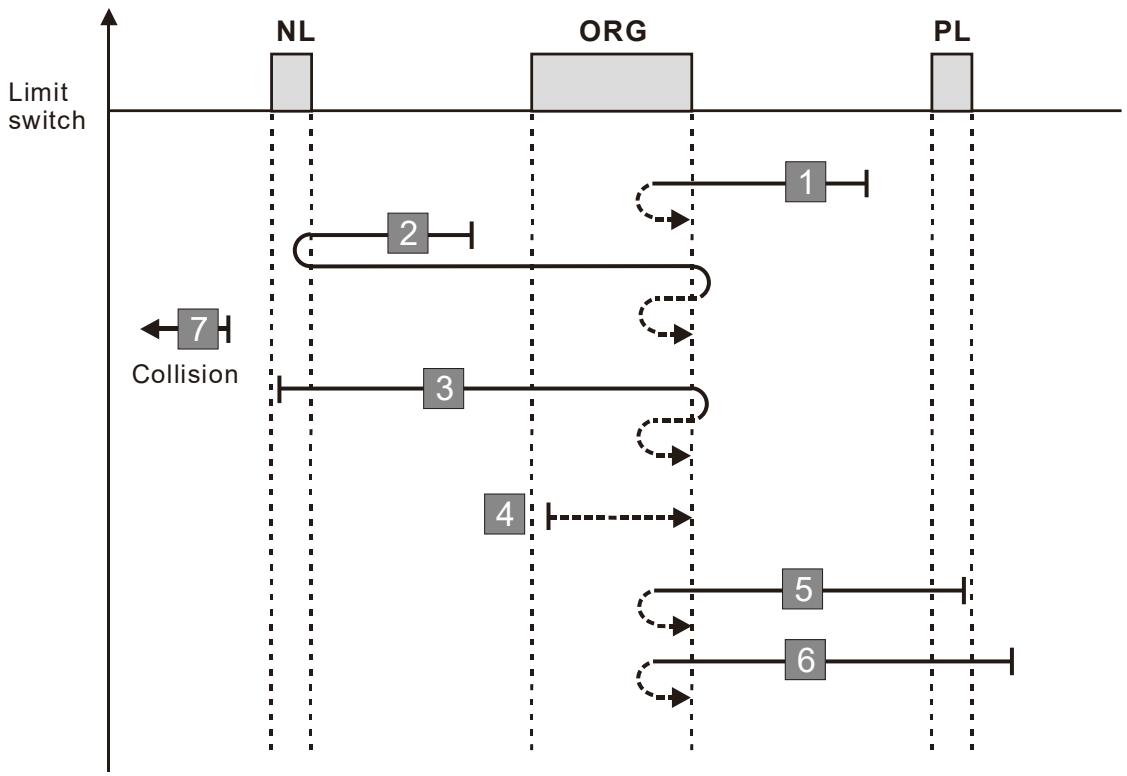

A homing failure occurs when the following conditions happen:

1. If a positive limit switch signal is encountered when the motor moves in the forward direction, a homing failure occurs.
2. If no negative limit switch signal is encountered in the homing process mentioned above, and time-out is triggered, then a homing failure occurs.

Diagram 26

CiA402 Object 0x6098H	Z	Y	X	Function Description
Homing Method	Home Limit	Z-phase Signal Setting	Homing Mode	
28	1	2	3	Execute homing position control in the reverse direction and use the ORG switch (from 0 to 1) as the origin. When encountering the negative limit switch, the direction is reversed to locate the origin.

1. The initial movement direction depends on the ORG switch status. The initial movement is in the forward direction if the ORG switch is active; the initial movement is in the reverse direction if the ORG switch is inactive.
2. When moving in the reverse direction and encountering the negative limit switch, the movement direction is reversed and waits for the falling-edge trigger of the negative limit switch.
3. When moving in the forward direction and encountering the falling edge of the ORG switch, the movement direction is reversed.
4. Then, wait for the rising-edge trigger of the ORG switch as the origin.

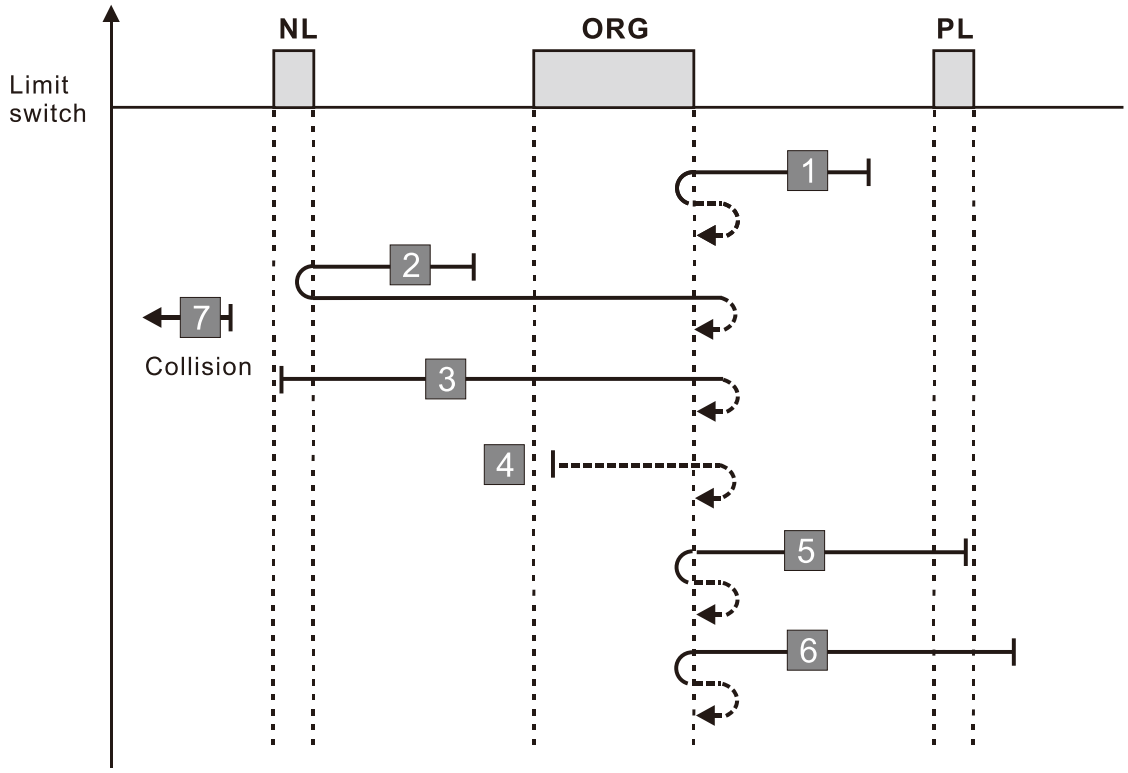

A homing failure occurs when the following conditions happen:

1. If a positive limit switch signal is encountered when the motor moves in the forward direction, a homing failure occurs.
2. If no negative limit switch signal is encountered in the homing process mentioned above, and time-out is triggered, then a homing failure occurs.

Diagram 27

CiA402 Object 0x6098H	Z	Y	X	Function Description
Homing Method	Home Limit	Z-phase Signal Setting	Homing Mode	
29	No correspondence			See the diagram for homing method 29

1. The initial movement is in the reverse direction.
2. When moving in the reverse direction and encountering the negative limit switch, the movement direction is reversed and waits for the falling-edge trigger of the negative limit switch.
3. When moving in the reverse direction and encountering the falling edge of the ORG switch, the movement direction is reversed.
4. Then, wait for the rising-edge trigger of the ORG switch as the origin.

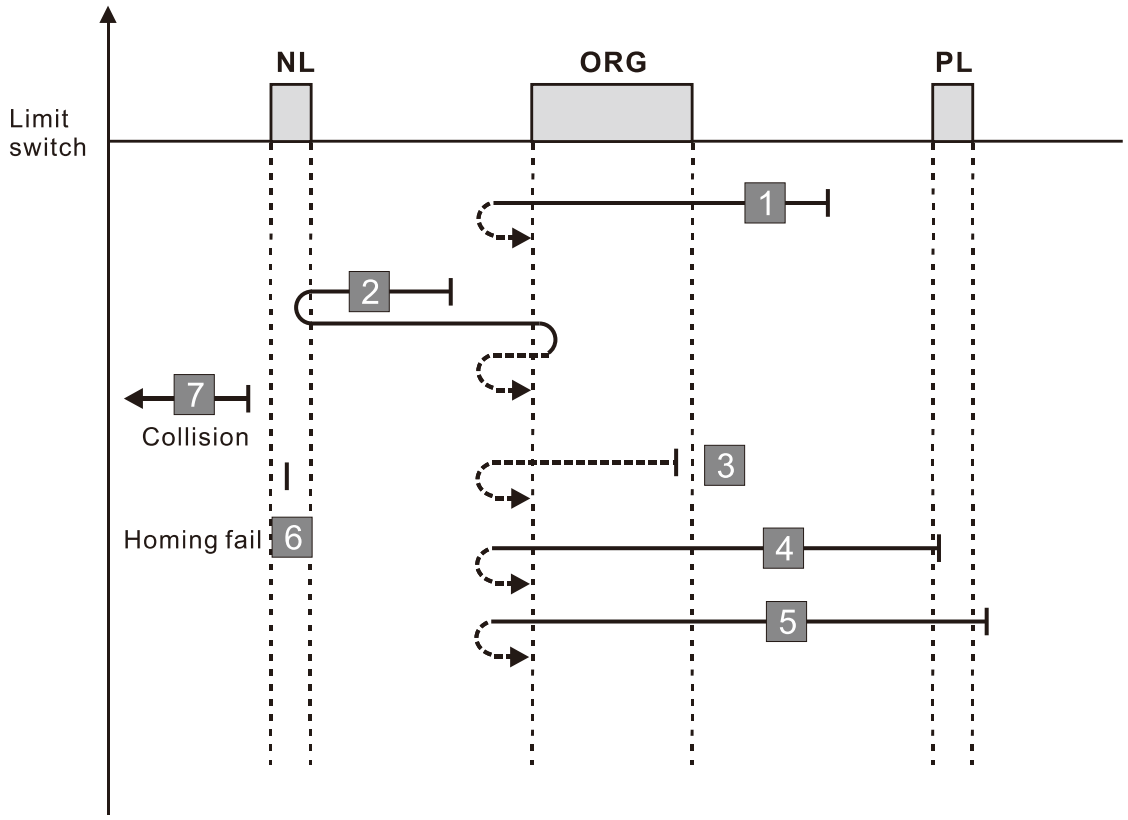

A homing failure occurs when the following conditions happen:

1. If a positive limit switch signal is encountered when the motor moves in the forward direction, a homing failure occurs.
2. If no negative limit switch signal is encountered in the homing process mentioned above, and time-out is triggered, then a homing failure occurs.

Diagram 28

CiA402 Object 0x6098H	Z	Y	X	Function Description
Homing Method	Home Limit	Z-phase Signal Setting	Homing Mode	
30	1	2	7	Execute homing position control in the reverse direction and use the ORG switch (from 1 to 0) as the origin. When encountering the negative limit switch, the direction is reversed to locate the origin.

1. The initial movement is in the reverse direction.
2. When moving in the reverse direction and encountering the negative limit switch, the movement direction is reversed and waits for the falling-edge trigger of the negative limit switch.
3. When moving in the forward direction and encountering the rising edge of the ORG switch, the movement direction is reversed.
4. Then, wait for the falling-edge trigger of the ORG switch as the origin.

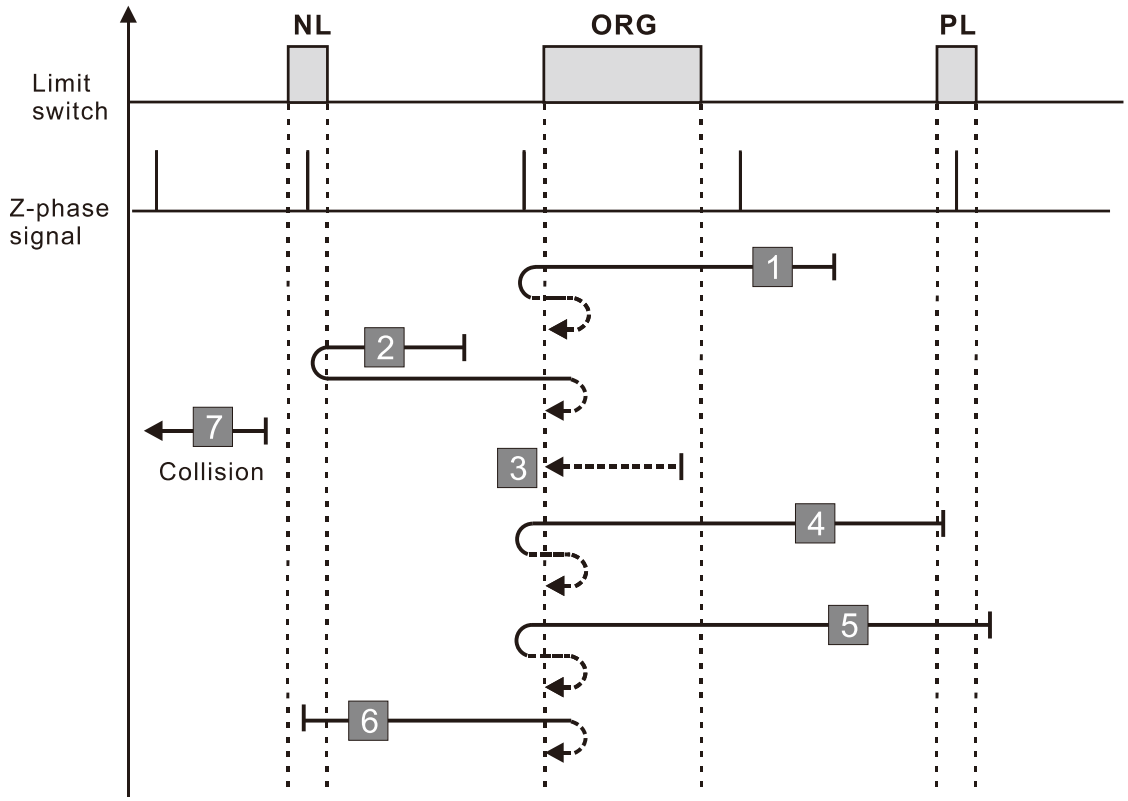

A homing failure occurs when the following conditions happen:

1. If a positive limit switch signal is encountered when the motor moves in the forward direction, a homing failure occurs.
2. If no negative limit switch signal is encountered in the homing process mentioned above, and time-out is triggered, then a homing failure occurs.

Diagram 29

CiA402 Object 0x6098H	Z	Y	X	Function Description
Homing Method	Home Limit	Z-phase Signal Setting	Homing Mode	
33	0	-	5	Locate the Z-phase signal in the reverse direction and use the Z-phase signal as the origin. Stops when encountering the negative limit switch.

1. The initial movement is in the reverse direction.
2. Then, the movement locates the Z-phase signal in the reverse direction and uses the Z-phase signal as the origin.

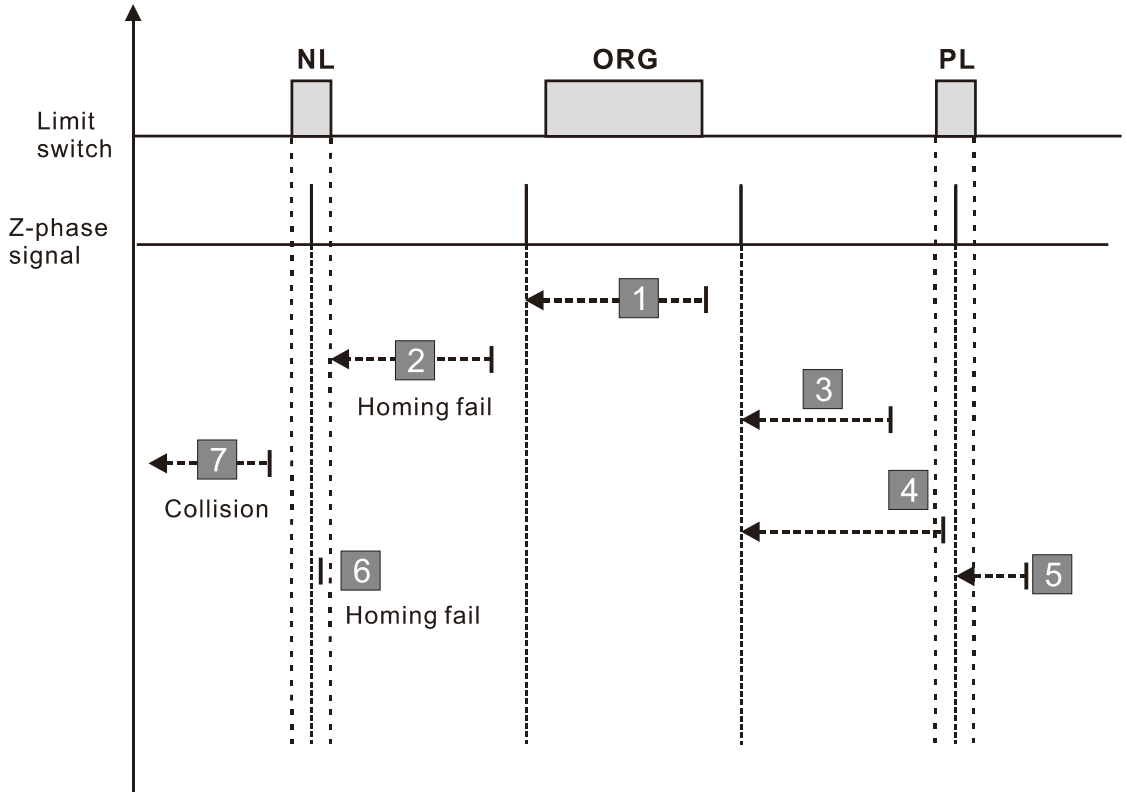

A homing failure occurs when the following conditions happen:

1. If a positive or negative limit switch signal is encountered in the process of motor movement, a homing failure occurs.
2. If no Z-phase signal is encountered in the homing process mentioned above, and time-out is triggered, then a homing failure occurs.

Diagram 30

CiA402 Object 0x6098H	Z	Y	X	Function Description
Homing Method	Home Limit	Z-phase Signal Setting	Homing Mode	
34	0	-	4	Locate the Z-phase signal in the forward direction and use the Z-phase signal as the origin. Stops when encountering the positive limit switch.

1. The initial movement is in the forward direction.
2. Then, the movement locates the Z-phase signal in the forward direction and uses the Z-phase signal as the origin.

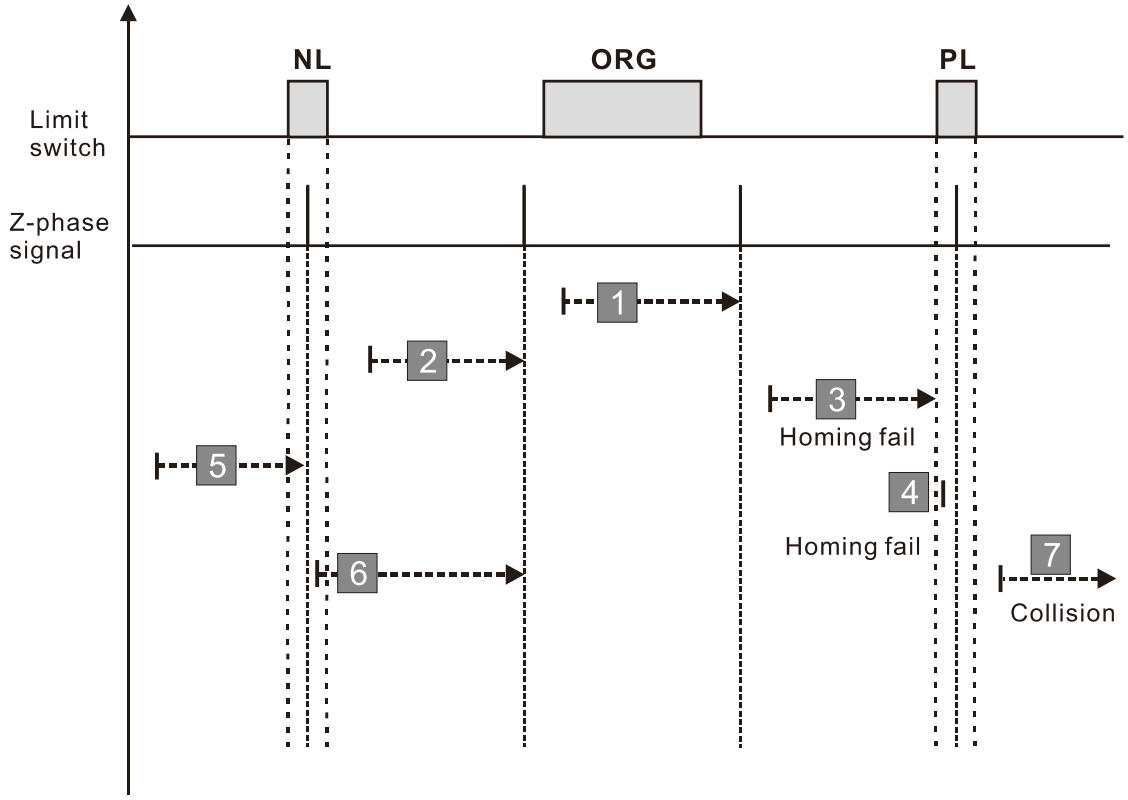

A homing failure occurs when the following conditions happen:

1. If a positive or negative limit switch signal is encountered in the process of motor movement, a homing failure occurs.
2. If no Z-phase signal is encountered in the homing process mentioned above, and time-out is triggered, then a homing failure occurs.

Diagram 31

CiA402 Object 0x6098H	Z	Y	X	Function Description
Homing Method	Home Limit	Z-phase Signal Setting	Homing Mode	
35	-	-	8	Use the current position as the origin.

1. The current position is used as the origin (this function is available even when the drive is in stop status).

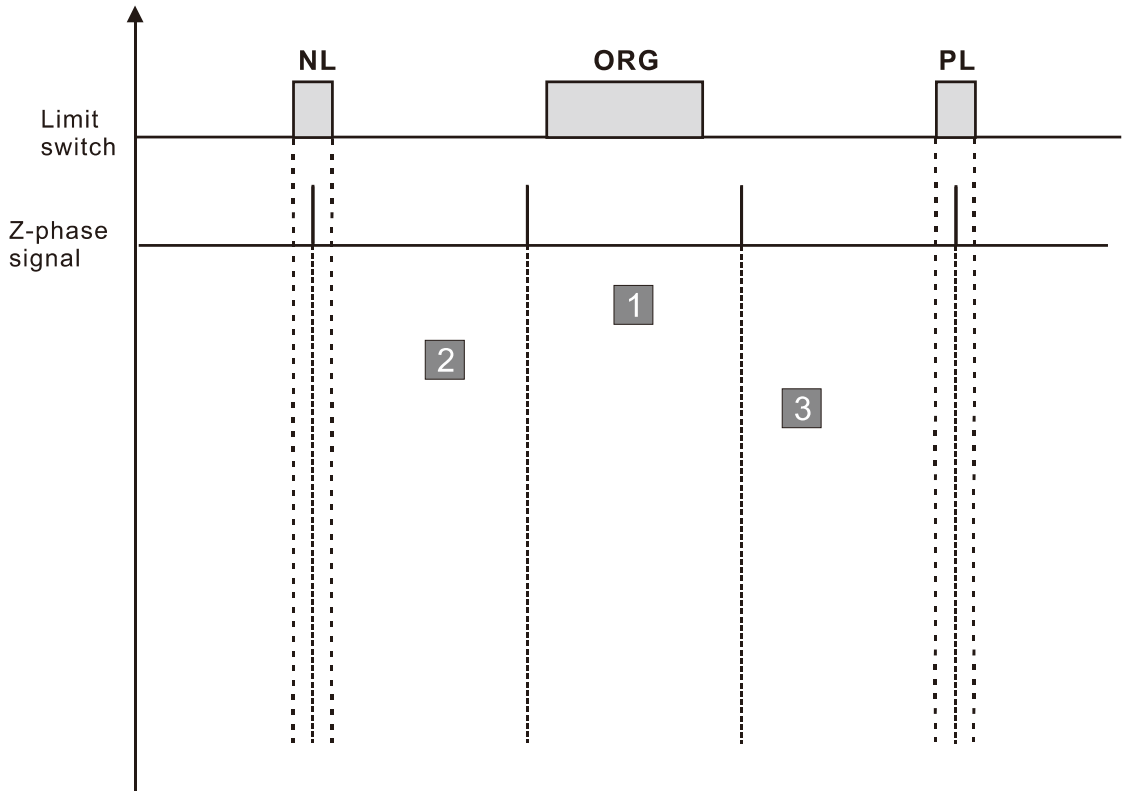

A homing failure occurs when the following condition happen:

1. No homing failure condition occurs.

11-69 Homing control time out

Default: 60.0

Settings 0.0–6000.0 sec.

Sets the time limit for completing the homing process. When executing homing position control, a fault occurs for the drive if positioning time exceeds Pr.11-69.

11-70 Homing control 1st step speed

Default: 8.00

Settings 0.00–599.00 Hz

11-71 Homing control 2nd step speed

Default: 2.00

Settings 0.00–599.00 Hz

There are two steps of speed for the homing process:

CiA402 defines:

- The first-step speed is used to locate the switch signals (positive limit switch, negative limit switch and ORG switch)
- The second-step speed is used to locate the reference point (Z-phase signal, the rising/falling edge of the ORG switch signal)

Considering the braking distance when the motor encounters the switch signal, do not use a too fast first-step speed.

To ensure the high repeatability of the reference point, use a low second-step speed.

11-72 Homing control acceleration / deceleration time (0–Homing control 1st step speed)

Default: 10.00

Settings 0.00–600.00 sec.

This parameter is the first-step of acceleration/deceleration time from 0 Hz to Pr.11-70 when the homing position control function is enabled.

Acceleration/deceleration time in the process of homing refers to Pr.11-72 setting value.

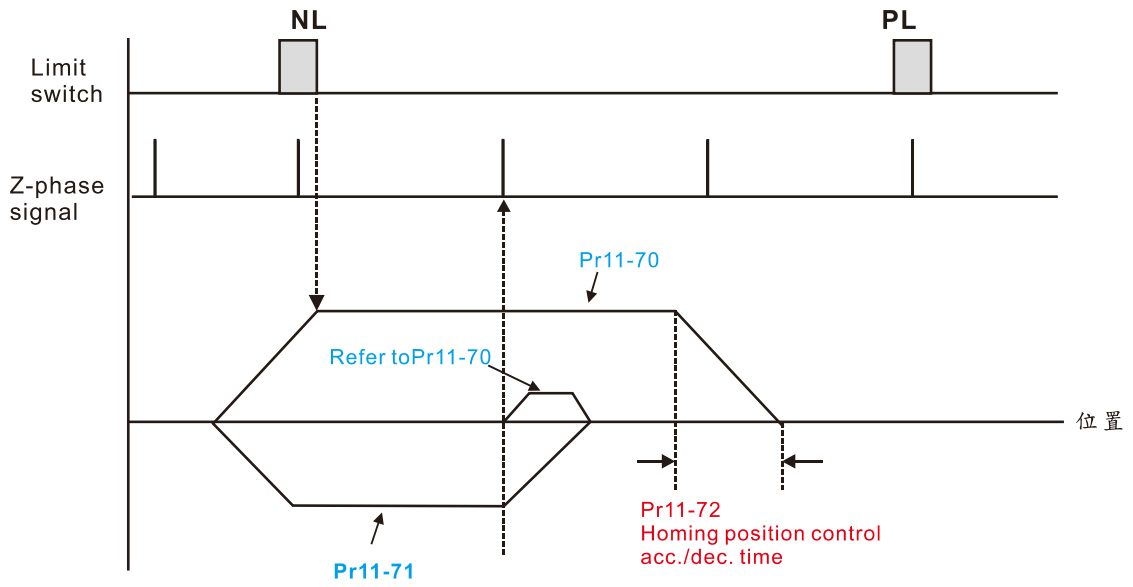

11-73 Homing control offset (revolution)

Default: 0

Settings -30000–30000 resolutions

11-74 Homing control offset (pulse)

Default: 0

Settings Refer to Pr.10-01 setting

Pr.11-73 and Pr.11-74 are the offset number of revolutions and pulses required for the coordinate system origin (mechanical origin) position determined after the homing positioning process is completed.

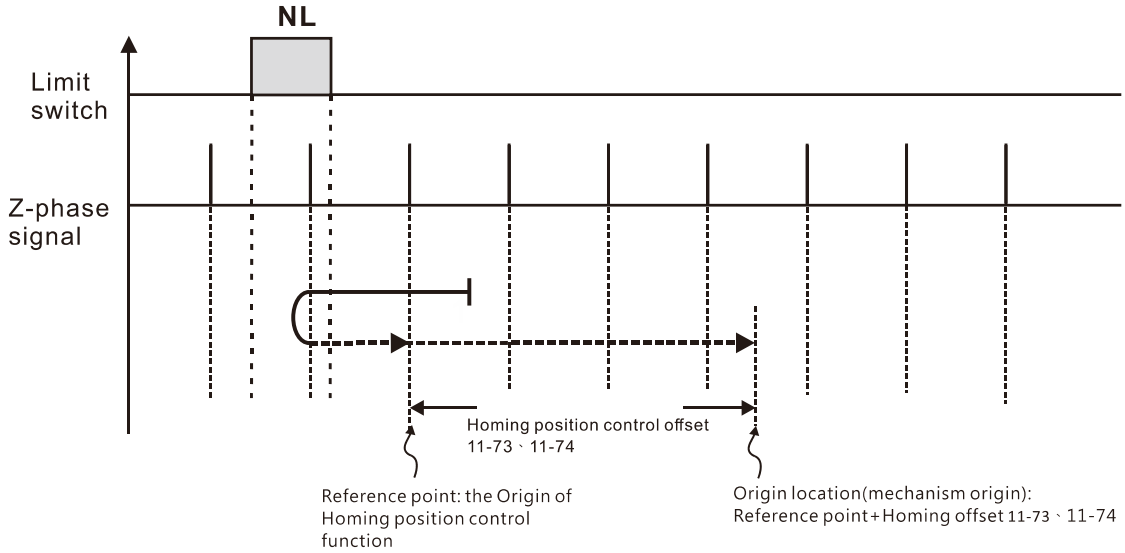

11-75 Position record (revolution)

Default: 0

Settings -30000–30000 resolutions

11-76 Position record (pulse)

Default: 0

Settings Refer to Pr.10-01 setting

The position memory function enables the drive to record the motor's current position and makes the coordinate system remain at the mechanical origin even after the drive's power-off when using incremental encoder. With this function, you do not need to execute the homing positioning again.

The position memory function is only valid when Pr.11-60 bit0=1 (position memory function is enabled).

When the drive is powered off, it records the motor's current position in Pr.11-75 and Pr.11-76. After the drive is powered on again, the motor's initial position = Pr.11-75 × PPR number + Pr.11-76, and the homing process is regarded as completed.

If the saved position exceeds the maximum capacity of position memory (Pr.11-75 and Pr.11-76), the warning code POF (position counting overflow) is displayed after the drive is powered on again.

11-78 HALT revived selection

Default: 0

Settings 0: Stopped

1: Continue according to the previous positon command

When executing P2P positioning position control through communications:

If 6000h bit3=1, the drive stops at zero speed in a Servo ON status according to the deceleration time for position control.

If 6000h bit3=0, the drive acts according to Pr.11-78 settings:

When Pr.11-78=0, the drive is in complete stop, and Servo ON remains.

When Pr.11-78=1, the drive resumes with previous position command.

	bit	Value	bit name	Profile Position Control Mode (pp)
6000h	3	0	HALT	Acts according to Pr.11-78 settings
		1		Stops according to the deceleration time for position control

13 Application Parameters by Industry (appied to 230V / 460V models)

✓ This parameter can be set during operation.

13-00 Industry-specific parameter application

Default: 0

Settings 0: Disabled
1: User-defined Parameter
2: Compressor (IM)
3: Fan
4: Pump
10: Air Handling Unit, AHU

Note: after you select the macro, some of the default values adjust automatically according to the application selection.

Group setting 02: Compressor (IM)

The following table lists the relevant compressor application parameters.

Pr.	Explanation	Settings
00-11	Speed control mode	0 (V/F control)
00-16	Load selection	0 (Normal load)
00-17	Carrier frequency	Default setting
00-20	Master frequency command source (AUTO) / Source selection of the PID target	2 (External analog input)
00-21	Operation command source (AUTO)	1 (External terminals)
00-22	Stop method	0 (Ramp to stop)
00-23	Control of motor direction	1 (Disable reverse)
01-00	Maximum operation frequency	Default setting
01-01	Output frequency of motor 1	Default setting
01-02	Output voltage of motor 1	Default setting
01-03	Mid-point frequency 1 of motor 1	Default setting
01-04	Mid-point voltage 1 of motor 1	Default setting
01-05	Mid-point frequency 2 of motor 1	Default setting
01-06	Mid-point voltage 2 of motor 1	Default setting
01-07	Minimum output frequency of motor 1	Default setting
01-08	Minimum output voltage of motor 1	Default setting
01-11	Output frequency lower limit	20 (Hz)
01-12	Acceleration time 1	20 (s)
01-13	Deceleration time 1	20 (s)
03-00	Analog input selection (AVI)	0 (No function)
03-01	Analog input selection (ACI)	1 (Frequency command)
05-01	Full-load current for induction motor 1 (A)	Default setting
05-03	Rated speed for induction motor 1 (rpm)	Default setting
05-04	Number of poles for induction motor 1	Default setting

Group setting 03: Fan

The following table lists the relevant fan setting application parameters.

Pr.	Explanation	Settings
00-11	Speed control mode	0 (V/F control)
00-16	Load selection	0 (Normal load)
00-17	Carrier frequency	Default setting
00-20	Master frequency command source (AUTO) / Source selection of the PID target	2 (External analog input)
00-21	Operation command source (AUTO)	1 (External terminals)
00-22	Stop method	1 (Coast to stop)
00-23	Control of motor direction	1 (Disable reverse)
00-30	Master frequency command (HAND) source	0 (Digital keypad)
00-31	Operation Command (HAND) source	0 (Digital keypad)
01-00	Maximum operation frequency	Default setting
01-01	Output frequency of motor 1	Default setting
01-02	Output voltage of motor 1	Default setting
01-03	Mid-point frequency 1 of motor 1	Default setting
01-04	Mid-point voltage 1 of motor 1	Default setting
01-05	Mid-point frequency 2 of motor 1	Default setting
01-06	Mid-point voltage 2 of motor 1	Default setting
01-07	Minimum output frequency of motor 1	Default setting
01-08	Minimum output voltage of motor 1	Default setting
01-10	Output frequency upper limit	50 (Hz)
01-11	Output frequency lower limit	35 (Hz)
01-12	Acceleration time 1	15 (s)
01-13	Deceleration time 1	15 (s)
01-43	V/F curve selection	2 (Second V/F curve)
02-05	Multi-function input command 5 (MI5)	16 (Rotating speed command from ACI)
03-00	Analog input selection (AVI)	1 (Frequency command)
03-01	Analog input selection (ACI)	1 (Frequency command)
03-28	AVI terminal input selection	0 (0–10 V)
03-29	ACI terminal input selection	1 (0–10 V)
03-31	AFM output selection	0 (0–10 V)
03-50	Analog input curve selection	1 (three-point curve of AVI)
07-06	Restart after momentary power loss	2 (Speed tracking by minimum output frequency)
07-11	Number of times of restart after fault	5 (times)
07-33	Auto-restart interval of fault	60 (s)

🕮 Group setting 04: Pump

The following table lists the relevant pump setting application parameters.

Pr.	Explanation	Settings
00-11	Speed control mode	0 (V/F control)
00-16	Load Selection	0 (Normal load)
00-20	Master frequency command source (AUTO) / Source selection of the PID target	2 (External analog input)
00-21	Operation command source (AUTO)	1 (External terminals)
00-23	Control of motor direction	1 (Disable reverse)
01-00	Maximum operation frequency	Default setting
01-01	Output frequency of motor 1	Default setting
01-02	Output voltage of motor 1	Default setting
01-03	Mid-point frequency 1 of motor 1	Default setting
01-04	Mid-point voltage 1 of motor 1	Default setting
01-05	Mid-point frequency 2 of motor 1	Default setting
01-06	Mid-point voltage 2 of motor 1	Default setting
01-07	Minimum output frequency of motor 1	Default setting
01-08	Minimum output voltage of motor 1	Default setting
01-10	Output frequency upper limit	50 (Hz)
01-11	Output frequency lower limit	35 (Hz)
01-12	Acceleration time 1	15 (s)
01-13	Deceleration time 1	15 (s)
01-43	V/F curve selection	2 (Second V/F curve)
07-06	Restart after momentary power loss	2 (Speed tracking by minimum output frequency)
07-11	Number of times of restart after fault	5
07-33	Auto-restart interval of fault	60 (s)

Group setting 10: Air Handling Unit, AHU

The following table lists the relevant AHU setting application parameters.

Pr	Explanation	Settings
00-04	Content of multi-function display	2
00-11	Speed control mode	0 (V/F control)
00-16	Load Selection	0 (Normal load)
00-20	Master frequency command source (AUTO) / Source selection of the PID target	2 or 0
00-21	Operation command source (AUTO)	1 or 0
00-22	Stop method	1 (Coast to stop)
00-23	Control of motor direction	1 (Disable reverse)
00-30	Master frequency command (HAND) source	0 (Digital keypad)
00-31	Operation Command (HAND) source	0 (Digital keypad)
01-00	Maximum operation frequency	50
01-01	Output frequency of motor 1	50
01-02	Output voltage of motor 1	380
01-07	Minimum output frequency of motor 1	0.1
01-10	Output frequency upper limit	50
01-11	Output frequency lower limit	35
01-34	Zero-speed mode	2
01-43	V/F curve selection	2
02-05	Multi-function input command 5 (MI5)	16 or 17
02-13	Multi-function output 1 RLY1	11
02-14	Multi-function output 2 RLY2	1
03-00	Analog input selection (AVI)	1
03-01	Analog input selection (ACI)	1
03-02	Analog input selection (AUI)	1
03-28	AVI terminal input selection	0
03-29	ACI terminal input selection	1
03-20	Multi-function output 1 (AFM1)	0
03-23	Multi-function output 2 (AFM2)	0
03-31	AFM2 output selection	0 or 1
03-50	Analog input curve selection	4 (three-point curve of AUI)
07-06	Restart after momentary power loss	2 (Speed tracking by minimum output frequency)
07-11	Number of times of restart after fault	5 (times)
07-33	Auto-restart interval of fault	60 (s)

14 Extension Card Parameter

✓ This parameter can be set during operation.

✓ 14-00 Extension Card Input Terminal Selection (AI10)

✓ 14-01 Extension Card Input Terminal Selection (AI11)

Default: 0

Settings
0: Disable
1: Frequency command
2: Torque command (torque limit under speed mode)
3: Torque compensation command
4: PID target value
5: PID feedback signal
6: Thermistor (PTC / KTY-84) input value
7: Positive torque limit
8: Negative torque limit
9: Regenerative torque limit
10: Positive / negative torque limit
11: PT100 thermistor input value
13: PID compensation value

📖 If the settings for Pr.03-00–Pr.03-02 are the same, the AI10 input has highest priority.

✓ 14-08 Analog Input Filter Time (AI10)

✓ 14-09 Analog Input Filter Time (AI11)

Default: 0.01

Settings 0.00–20.00 sec.

📖 Analog signals, such as those entering AI1 and AI2, are commonly affected by interference that affects the stability of the analog control. Use the Input Noise Filter to create a more stable system.

📖 When the time constant setting is too large, the control is stable but the control response is slow. When the time constant setting is too small, the control response is faster but the control may be unstable. For optimal setting, adjust the setting based on the control stability or the control response.

14-10 Analog Input 4–20 mA Signal Loss Selection (AI10)

14-11 Analog Input 4–20 mA Signal Loss Selection (AI11)

Default: 0

Settings
0: Disable
1: Continue operation at the last frequency
2: Decelerate to 0Hz
3: Stop immediately and display “ACE”

📖 Determines the treatment when the 4–20 mA signal is lost (Pr.14-18 = 2, Pr.14-19 = 2).

- When Pr.14-18 or Pr.14-19 = 0, the voltage input is 0–10 V; when Pr.14-18 or Pr.14-19 = 1, the voltage input is 4–20 mA, and Pr.14-10 and Pr.14-11 are invalid.
- When the setting is 1 or 2, the keypad displays the warning code “ANL”. It keeps blinking until the ACI signal is recovered.
- When the drive stops, the condition that causes the warning does not exist, so the warning automatically disappears.

14-12 Extension Card Output Terminal Selection (AO10)
14-13 Extension Card Output Terminal Selection (AO11)

Default: 0

Settings 0–23

- Refer to the function chart below for details setting.

Function Chart

Settings	Functions	Descriptions
0	Output frequency (Hz)	Maximum frequency Pr.01-00 is processed as 100%.
1	Frequency command (Hz)	Maximum frequency Pr.01-00 is processed as 100%.
2	Motor speed (Hz)	Maximum frequency Pr.01-00 is processed as 100%.
3	Output current (rms)	(2.5 × drive rated current) is processed as 100%
4	Output voltage	(2 × motor rated voltage) is processed as 100%
5	DC bus voltage	450V (900V)=100%
6	Power factor	-1.000–1.000=100%
7	Power	(2 × drive rated power) is processed as 100%
8	Torque	Full load torque = 100%
9	AVI	0–10 V = 0–100%
10	ACI	4–20 mA = 0–100%
11	AUI	-10–10V = 0–100%
12	Iq current command	(2.5 × drive rated current) is processed as 100%
13	Iq feedback value	(2.5 × drive rated current) is processed as 100%
14	Id current command	(2.5 × drive rated current) is processed as 100%
15	Id feedback value	(2.5 × drive rated current) is processed as 100%
18	Torque command	Motor rated torque of motor = 100%
19	PG2 frequency command	Maximum frequency Pr.01-00 is processed as 100%.
20	CANopen analog output	For CANopen communication analog output Terminal / Address AFM1 / 2026-A1 AFM2 / 2026-A2 AO10 / 2026-AB AO11 / 2026-AC

<table>
<tr><th>Settings</th><th>Functions</th><th>Descriptions</th></tr>
<tr><td>21</td><td>RS-485 analog output</td><td>For RS-485 (InnerCOM / Modbus) control analog output
<table>
<tr><th>Terminal</th><th>Address</th></tr>
<tr><td>AFM1</td><td>26A0H</td></tr>
<tr><td>AFM2</td><td>26A1H</td></tr>
<tr><td>AO10</td><td>26AAH</td></tr>
<tr><td>AO11</td><td>26ABH</td></tr>
</table></td></tr>
<tr><td>22</td><td>Communication card analog output</td><td>For communication analog output (CMC-EIP01, CMC-PN01, CMC-DN01)
<table>
<tr><th>Terminal</th><th>Address</th></tr>
<tr><td>AFM1</td><td>26A0H</td></tr>
<tr><td>AFM2</td><td>26A1H</td></tr>
<tr><td>AO10</td><td>26AAH</td></tr>
<tr><td>AO11</td><td>26ABH</td></tr>
</table></td></tr>
<tr><td>23</td><td>Constant voltage output</td><td>Pr.03-32 controls the voltage output level.
0–100% of Pr.03-32 corresponds to 0–10 V of AFM.</td></tr>
<tr><td>25</td><td>CANopen and RS-485 analog output</td><td>For CANopen and InnerCOM control output</td></tr>
</table>

14-14 Analog Output 1 Gain (AO10)

14-15 Analog Output 1 Gain (AO11)

Default: 100.0

Settings 0.0–500.0%

Adjusts the voltage level outputted to the analog meter from the analog signal (Pr.14-12, Pr.14-13) output terminal AFM of the drive.

14-16 Analog Output 1 in REV Direction (AO10)

14-17 Analog Output 1 in REV Direction (AO11)

Default: 0

Settings 0: Absolute value in output voltage
1: Reverse output 0 V; forward output 0–10 V
2: Reverse output 5–0 V; forward output 5–10 V

Determines the reverse direction of output voltage when AO10 and AO11 are set as 0–10 V (Pr.14-36 = 0, Pr.14-37 = 0).

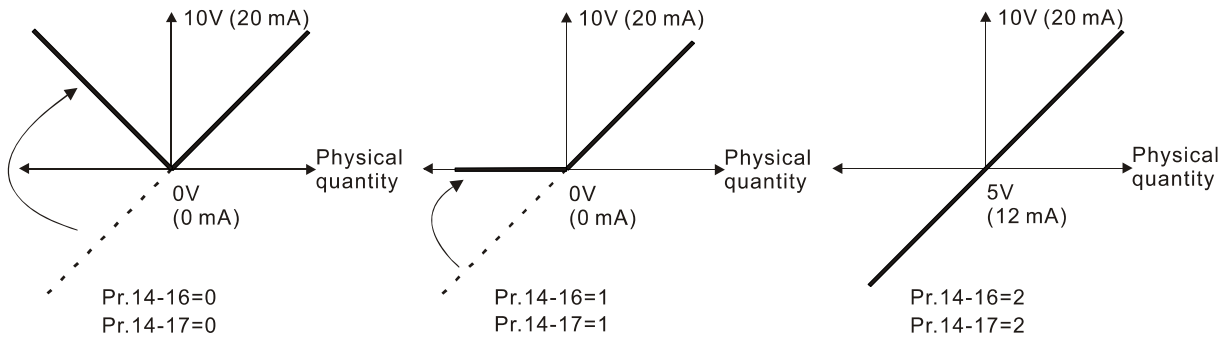

Selections for the analog output direction

14-18 Extension Card Input Selection (AI10)

Default: 0

Settings 0: 0–10 V (AVI10)
1: 0–20 mA (ACI10)
2: 4–20 mA (ACI10)

14-19 Extension Card Input Selection (AI11)

Default: 0

Settings 0: 0–10 V (AVI11)
1: 0–20 mA (ACI11)
2: 4–20 mA (ACI11)

When you change the input mode, verify that the external terminal switch (AI10, AI11) is in correct position.

14-20 AO10 DC Output Setting Level
14-21 AO11 DC Output Setting Level

Default: 0.00

Settings 0.00–100.00%

14-22 AO10 Filter Output Time
14-23 AO11 Filter Output Time

Default: 0.01

Settings 0.00–20.00 sec.

14-36 AO10 Output Selection
14-37 AO11 Output Selection

Default: 0

Settings 0: 0–10 V
1: 0–20 mA
2: 4–20 mA

12-2 Adjustment & Application

The followings are abbreviations for different types of motors:

- IM: Induction motor
- PM: Permanent magnet synchronous AC motor
- IPM: Interior permanent magnet synchronous AC motor
- SPM: Surface permanent magnet synchronous AC motor
- SynRM: Synchronous reluctance motor

12-2-1 Permanent-Magnet Synchronous Motor, Space Vector Control Adjustment Procedure (PM SVC, Pr.00-11=2)

(applicable for C2000 Plus firmware version after V3.05)

- Control diagram

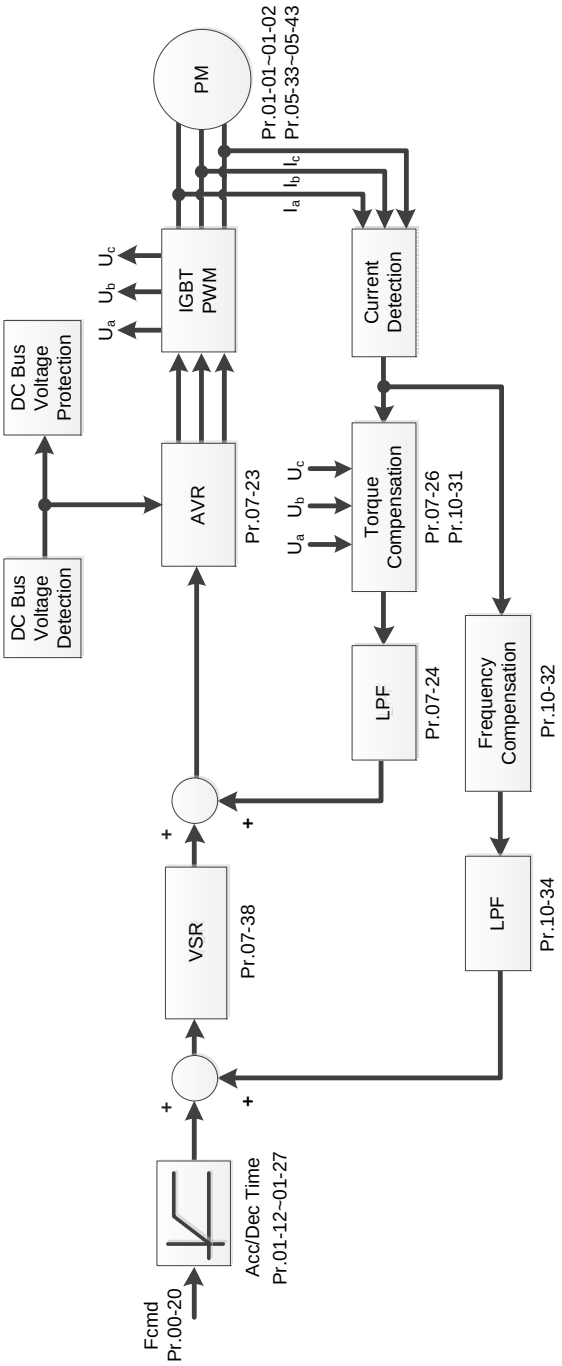

- PM SVC adjustment procedure
  (The number marked on the procedure corresponds to the number of following adjustment explanations)

I. PM SVC motor parameters adjustment flowchart

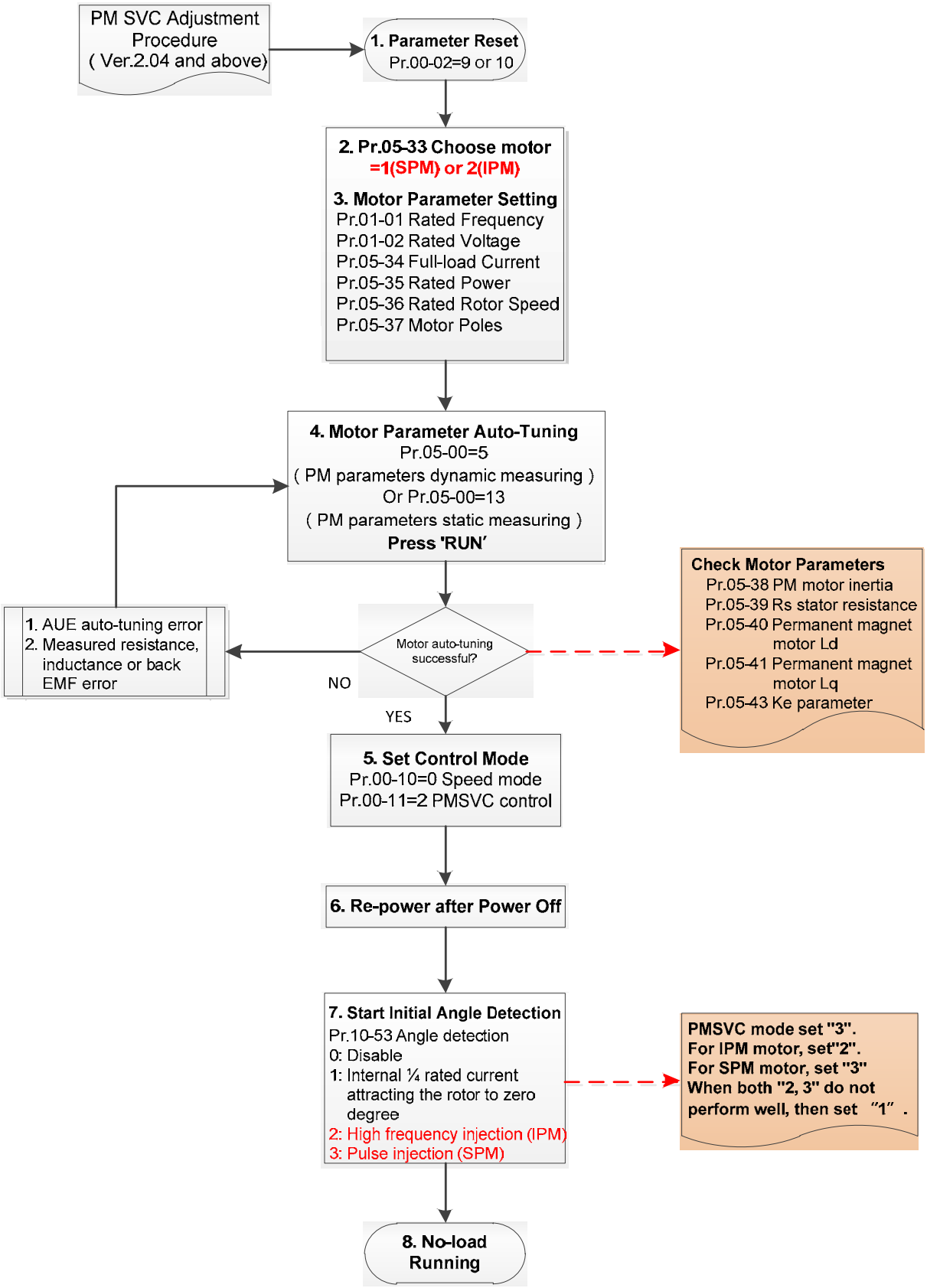

Basic motor parameters adjustment

1. Parameter reset:
   Reset Pr.00-02 = 9 (50 Hz) or 10 (60 Hz) to the default value.
2. Select PM motor type:
   Pr.05-33 = 1 (SPM) or 2 (IPM)
3. Motor nameplate parameter setting:

Parameter	Description
Pr.01-01	Rated frequency (Hz)
Pr.01-02	Rated voltage (V_{AC})
Pr.05-34	Rated current (A)
Pr.05-35	Rated power (kW)
Pr.05-36	Rated rotor speed (rpm)
Pr.05-37	Number of poles for the motor (poles)

4. PM parameter auto-tuning:
   Set Pr.05-00 = 5 (rolling auto-tuning for PM, with no load) or 13 (static auto-tuning for PM) and press RUN key to finish motor auto-tuning, then you will get the following parameters:

Parameter	Description
Pr.05-39	Stator resistance for a permanent magnet motor (Ω)
Pr.05-40	Permanent magnet motor Ld (mH)
Pr.05-41	Permanent magnet motor Lq (mH)
Pr.05-43	Ke parameter of a permanent magnet motor ($V_{phase \cdot rms}$ / krpm) (When Pr.05-00 = 5, the Ke parameter is measured based on the actual motor rotation.) (When Pr.05-00 = 13, the Ke parameter is automatically calculated based on the motor power, current and rotor speed.)

   If an auto-tuning error (AUE) occurs, refer to Chapter 14 “Fault Codes and Descriptions” for further treatment.

AUE Error (code)	Description
AUE (40)	Auto-tuning error
AUE1 (142)	Auto-tuning error 1 (No feedback current error)
AUE2 (143)	Auto-tuning error 2 (Motor phase loss error)

5. Set control mode
   Control mode for the drive: Pr. 00-10 = 0: Speed mode
   Control mode for the motor: Pr. 00-11 = 2: PM SVC mode
6. Re-power on after power off.
7. Measure the initial magnetic pole angle of PM
   Set Pr.10-53 PM initial rotor position detection method
   0: Disabled
   1: Using I/F current command (Pr.10-31) to attract the rotor to zero degrees
   2: High frequency injection
   3: Pulse injection
   * For IPM, the setting value is suggested to be 2; for SPM, the setting value is suggested to be 3. You can choose the setting 1 if the result is not good of setting as 2 or 3.

II. PM SVC adjustment flowchart for operation with no load / light load

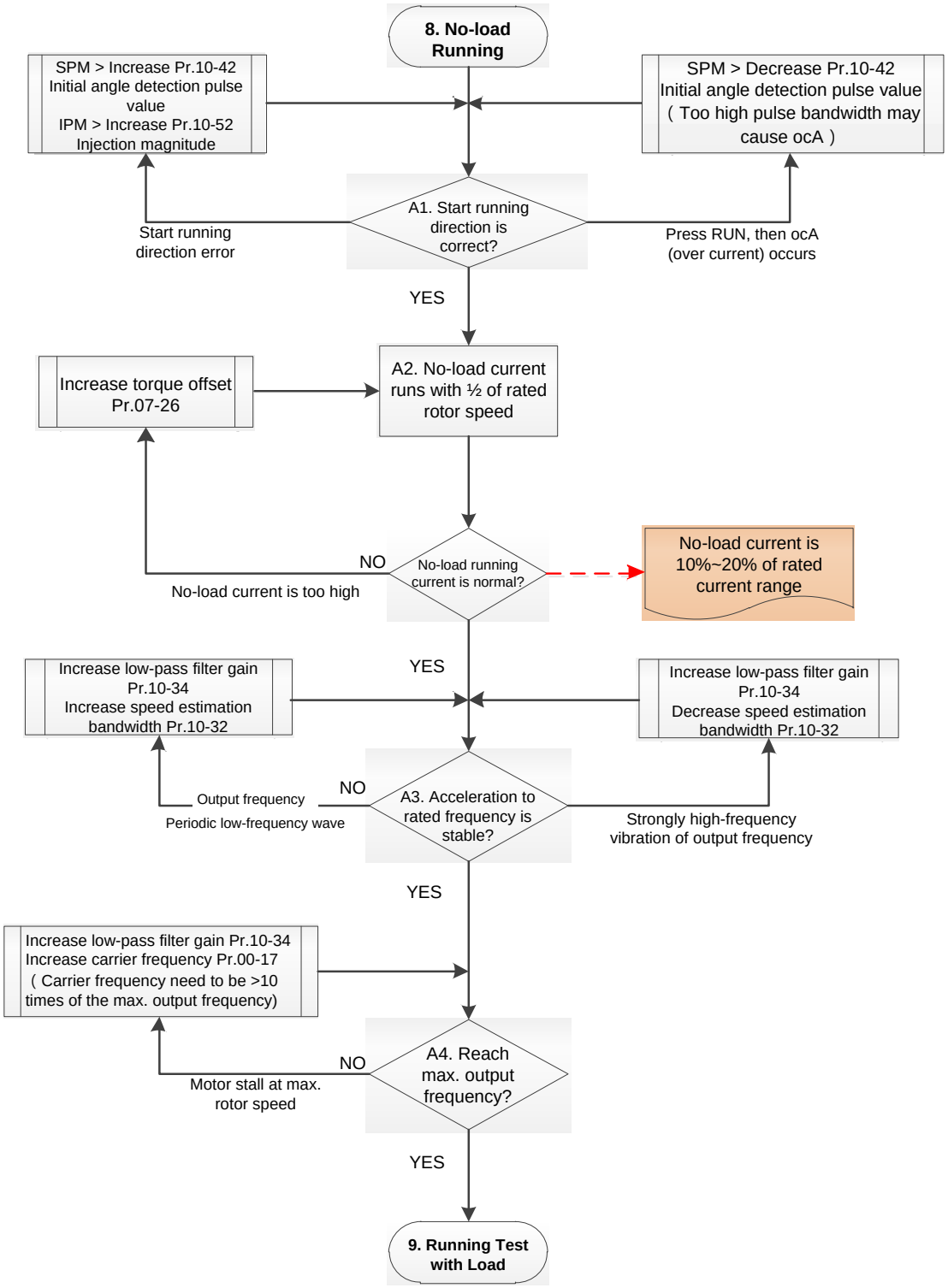

📖 Adjustment for operation with light load

8. Start the motor without load / with light load and operate to 1/2 of the rated rotor speed

A1. Start operation direction:

a. If the start operation direction is wrong

SPM: increase the current proportion for Pr.10-42 (initial angle detection pulse value) to improve the accuracy of the angle detection.

IPM: Increase the voltage for Pr.10-52 (injection magnitude) to improve the accuracy of the angle detection.

b. If an ocA error occurs when pressing RUN to start the motor, decrease the current proportion for Pr.10-42 (initial angle detection pulse value).

A2. Operates the motor in 1/2 of the rated rotor speed, adjust the no-load operating current
If the no-load operating current exceeds 20% of the rated current, increase Pr.07-26 (torque compensation gain) and observe the no-load operating current.

A3. Accelerate to the rated frequency and observe if the motor operates stably.

a. If the motor output rotor speed presents periodic low-frequency wave, increase Pr.10-34 (PM sensorless speed estimator low-pass filter gain), or increase Pr.10-32 (PM FOC sensorless speed estimator bandwidth).
b. If the output frequency reflects high frequency vibration, decrease Pr.10-34 or decrease Pr.10-32.

A4. Accelerate the motor to the maximum rotor speed, and observe if it operates stably.
If the motor stalls when accelerating to the maximum rotor speed, then increase Pr.10-34 (PM sensorless speed estimator low-pass filter gain), or increase Pr.00-17 (carrier frequency, you must set the carrier frequency larger than 10 times of the maximum output frequency)

III. PM SVC adjustment flowchart for operation starts with load

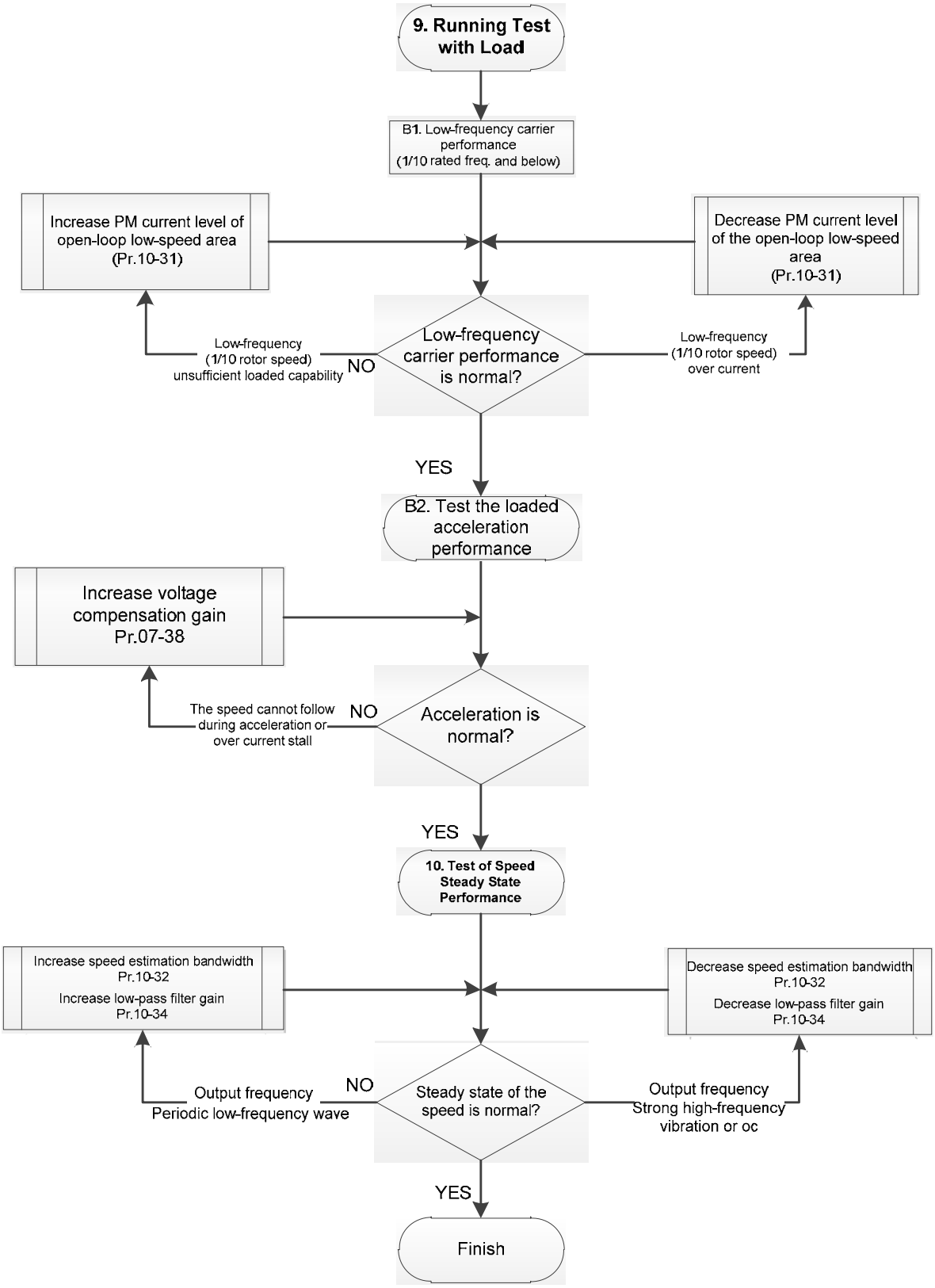

📖 Adjustment for operation with heavy load

9. Load operating test

B1. Low-frequency loading performance is below 1/10 of rated frequency:

a. If the low-frequency loading performance is insufficient, or the rotor speed is not smooth, increase Pr.10-31 (current command of I/F mode).

b. If the low-frequency current is large, decrease Pr.10-31 (current command of I/F mode).

B2. Test the with-load accelerating performance:

When the motor operates in 1/10 of rotor speed and above, if the speed cannot follow the acceleration time during accelerating, or the current stalls, increase Pr.07-38 (PMSVC voltage feedback forward gain).

10. Stability test at constant speed operation: the motor operates stably at constant speed

a. If the motor output rotor speed presents periodic low-frequency wave, increase Pr.10-34 (PM sensorless speed estimator low-pass filter gain), or increase Pr.10-32 (PM FOC sensorless speed estimator bandwidth).

b. If the output frequency reflects high frequency vibration, decrease Pr.10-34 or decrease Pr.10-32.

- PM SVC related parameters

Refer to Section 12-1 Description of Parameter Settings for more details.

Parameter	Description	Unit	Default	Setting Range
Pr.07-24	Torque command filter time	sec.	0.500	0.001–10.000
Pr.07-26	Torque compensation gain	NA	0	0–5000
Pr.07-38	PMSVC voltage feedback forward gain	NA	1.0	0.00–2.00
Pr.10-31	I/F mode, current command	%	40	0–150
Pr.10-32	PM FOC sensorless speed estimator bandwidth	Hz	5.00	0.00–600.00
Pr.10-34	PM sensorless speed estimator low-pass filter gain	NA	1.00	0.00–655.35
Pr.10-39	Frequency point to switch from I/F mode to PM sensorless mode	Hz	20.00	0.00–599.00
Pr.10-40	Frequency point to switch from PM sensorless mode to V/F mode	Hz	20.00	0.00–599.00
Initial Angle Estimating Parameters				
Pr.10-42	Initial angle detection pulse value	NA	1.0	0.0–3.0
Pr.10-51	Injection frequency	Hz	500	0–1200
Pr.10-52	Injection magnitude	V	15.0 / 30.0	0.0–200.0
Pr.10-53	PM initial rotor position detection method 0: Disable 1: Force attracting the rotor to zero degrees 2: High frequency injection 3: Pulse injection	NA	0	0–3

12-2-2 Permanent-Magnet Synchronuous Motor, Field-Oriented Control and with Encoder Adjustment Procedure (PM FOCPG, Pr,00-11=4)

(applicable for C2000 Plus firmware version after V3.05)

- Control diagram

(A) PM FOCPG control diagram

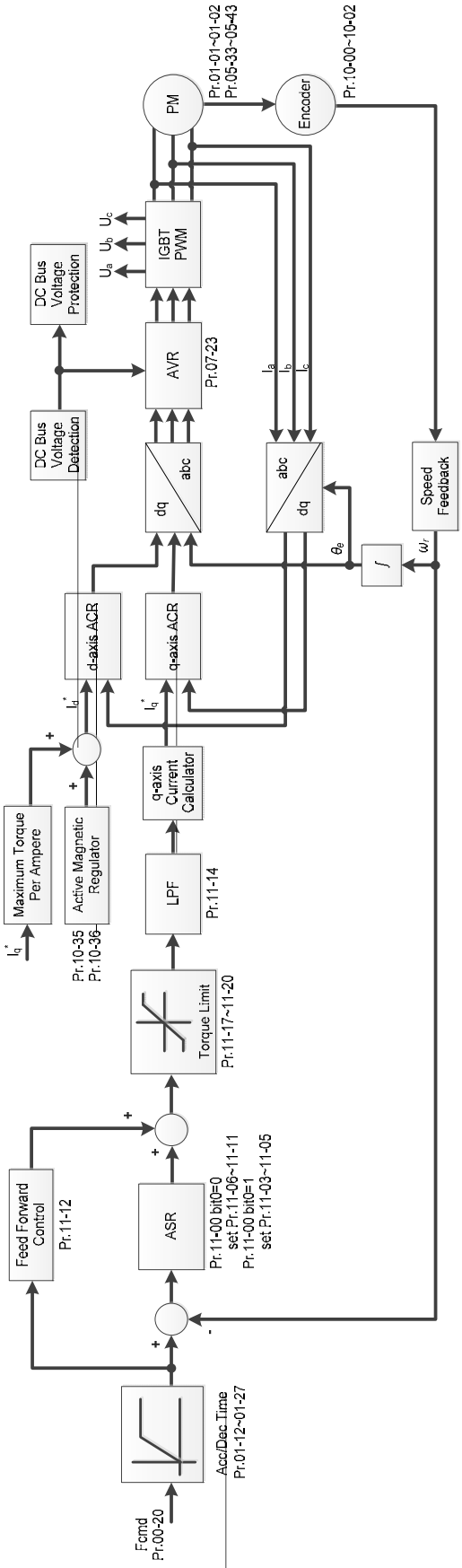

(B) PM TQCPG control diagram

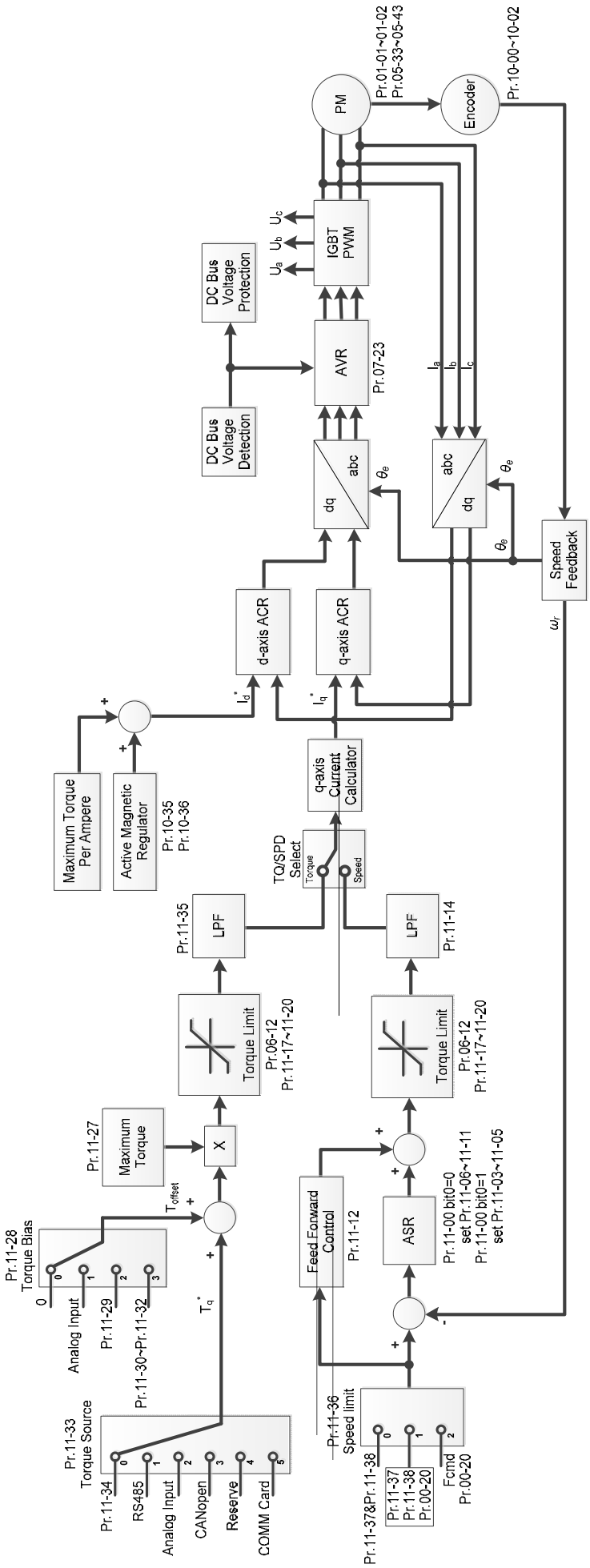

- PM FOCPG adjustment procedure
  (The number marked on the procedure corresponds to the number of following adjustment explanations)

  I. PM FOCPG motor parameters adjustment flowchart

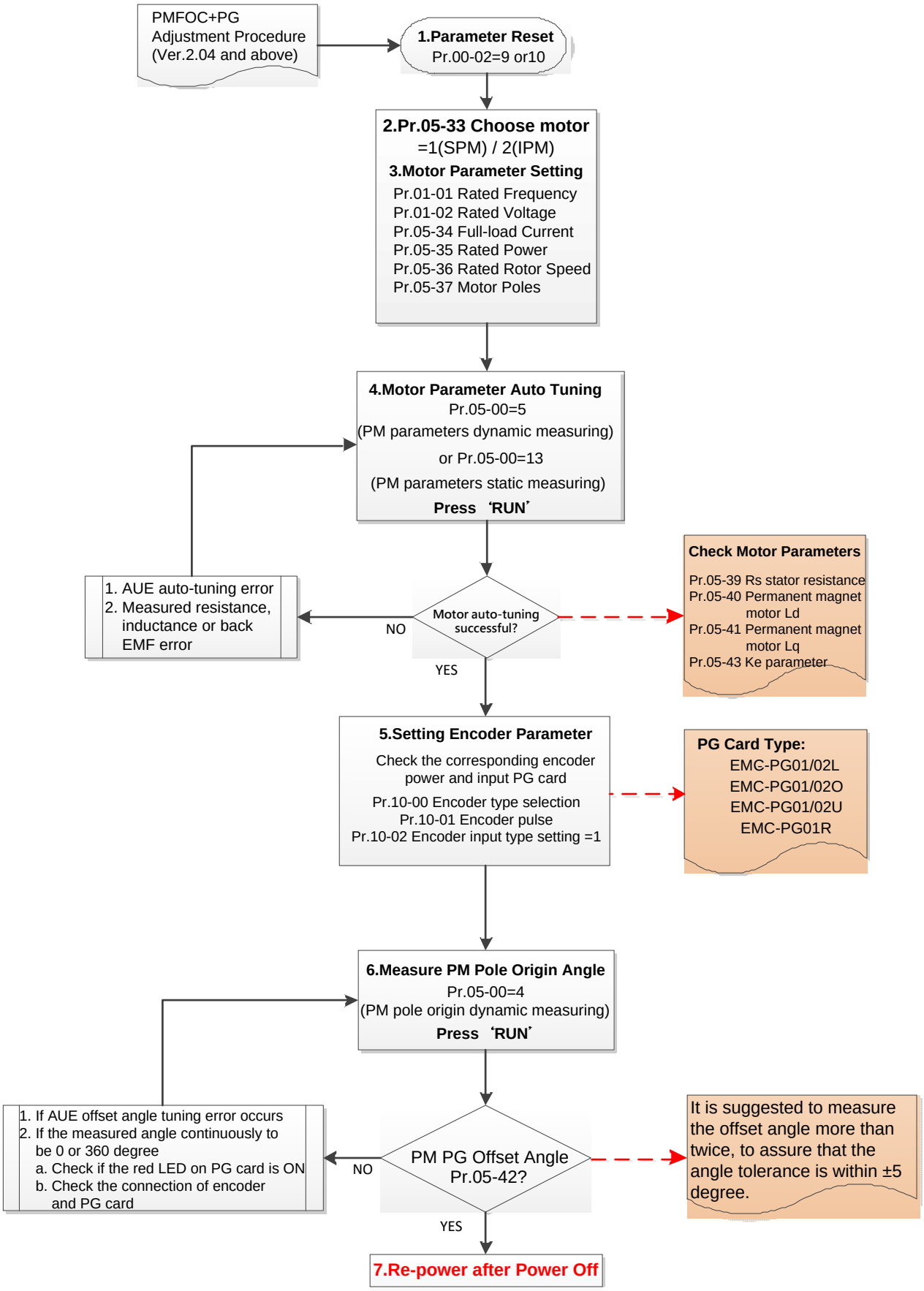

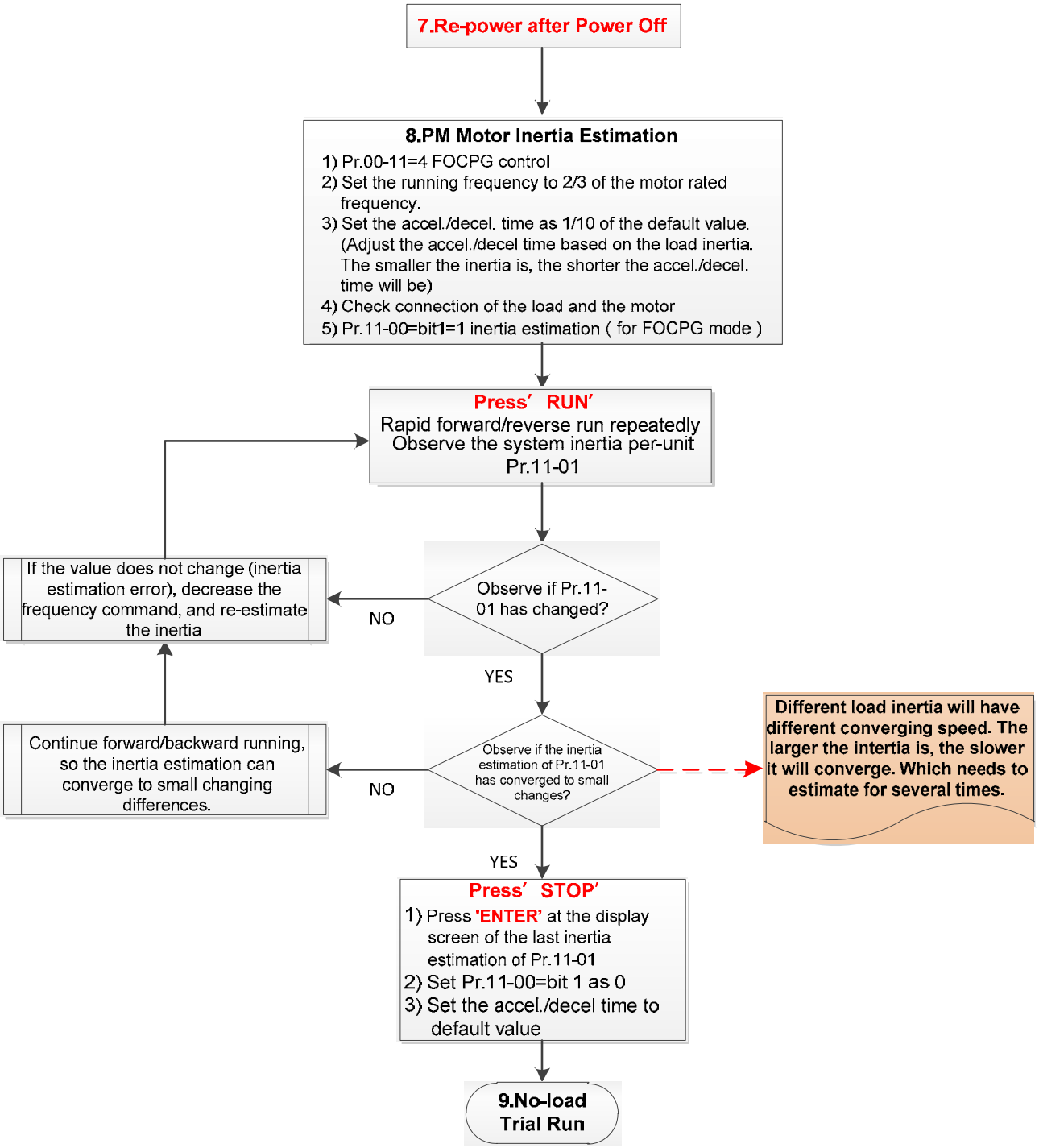

📖 basic motor parameters adjustment

1. Parameter reset:
   Reset Pr.00-02=9 (50Hz) or 10 (60Hz) to the default value.
2. Select IPM motor type:
   Pr.05-33=1 (SPM) or 2 (IPM)
3. Motor nameplate parameter setting:

Parameter	Description
Pr.01-01	Rated frequency (Hz)
Pr.01-02	Rated voltage (V_{AC})
Pr.05-33	PM motor type (IPM or SPM)
Pr.05-34	Rated current (A)

Parameter	Description
Pr.05-35	Rated power (kW)
Pr.05-36	Rated rotor speed (RPM)
Pr.05-37	Number of poles for the motor (poles)

4. PM parameter auto-tuning:
   Set Pr.05-00 = 5 (rolling auto-tuning for PM, with no load) or 13 (static auto-tuning for PM) and press RUN key to finish motor auto-tuning, then you will get the following parameters:

Parameter	Description
Pr.05-39	Stator resistance for a permanent magnet motor (Ω)
Pr.05-40	Permanent magnet motor Ld (mH)
Pr.05-41	Permanent magnet motor Lq (mH)
Pr.05-43	Ke parameter of a permanent magnet motor ($V_{phase\ \cdot\ rms}$ / krpm) (When Pr.05-00=5, the Ke parameter is measured based on the actual motor rotation.) (When Pr.05-00=13, the Ke parameter is automatically calculated based on the motor power, current and rotor speed.)

   If an auto-tuning error (AUE) occurs, refer to Chapter 14 “Error Codes and Descriptions” for further treatment.

AUE Error (code)	Description
AUE (40)	Auto-tuning error
AUE1 (142)	Auto-tuning error 1 (No feedback current error)
AUE2 (143)	Auto-tuning error 2 (Motor phase loss error)
AUE3 (144)	Auto-tuning error 3 (No-load current I_0 measuring error)
AUE4 (148)	Auto-tuning error 4 (Leakage inductance Lsigma measuring error)

5. Set encoder parameter
   Check the encoder power and input type, make sure it is used with correct PG card.

PG Card Type			
EMC-PG01L	EMC-PG01O	EMC-PG01U	EMC-PG01R
EMC-PG02L	EMC-PG02O	EMC-PG02U	-

   Related parameters:
   (1) Pr. 10-00: Encoder type selection
   (2) Pr. 10-01: Encoder pulses per revolution
   (3) Pr. 10-02: Encoder input type setting = 1 (A-phase and B-phase are pulse inputs, forward direction if A-phase leads B-phase by 90 degrees)
6. Measure the initial magnetic pole angle of PM
   (1) Set Pr.05-00=4 (dynamic test for PM magnetic pole)
   (2) Press RUN key to proceed the PM magnetic pole measurement, and to get the offset angle.
   Note 1: It is suggested to measure the offset angle more than twice, to make sure the angle tolerance is within ±5 degree.
   Note 2: Verify the encoder and PG card are connected in the right order.
7. Re-power on after power off.
8. Execute inertia estimation for PM
   (1) Set Pr. 00-11 = 4, PM FOCPG control.

(2) Set the operation frequency command to 2/3 of the motor's rated frequency.

(3) Set the acceleration / deceleration time (Pr. 01-12, Pr. 01-13) to 1/10 of the default time. (adjust the acceleration / deceleration time according to the load inertia. The smaller the load inertia, the shorter the acceleration / deceleration time is set).

(4) Check if the load and the motor is connected.

(5) Set Pr. 11-00 bit1 = 1, inertia estimate (only in FOCPG mode).

(6) Press RUN key to proceed the inertia

Quickly run the motor in forward and reverse direction repeatedly, and observe the inertia estimated value of Pr. 11-01 for the keypad.

a. If the system inertial estimated value of Pr. 11-01 does not change (= default 256), it means the inertia estimation is wrong. Reduce the frequency command and estimate the inertia again.

b. If the system inertia estimated value of Pr. 11-01 is still a lot different from the estimated value of FWD/REV operation, continue the estimation in forward / reverse operating direction to restraint the estimated inertia to small difference.

(7) Press STOP key to obtain the estimated inertia value:

a. Press ENTER to confirm the input value at the displayed page of the last estimated inertia value of Pr. 11-01.

b. Set Pr.11-01 bit1 = 0, return the control mode to speed mode.

c. Set the acceleration / deceleration time (Pr.01-12, 01-13) back to the default value.

II. PM FOC+PG adjustment flowchart for operation without load / with light load

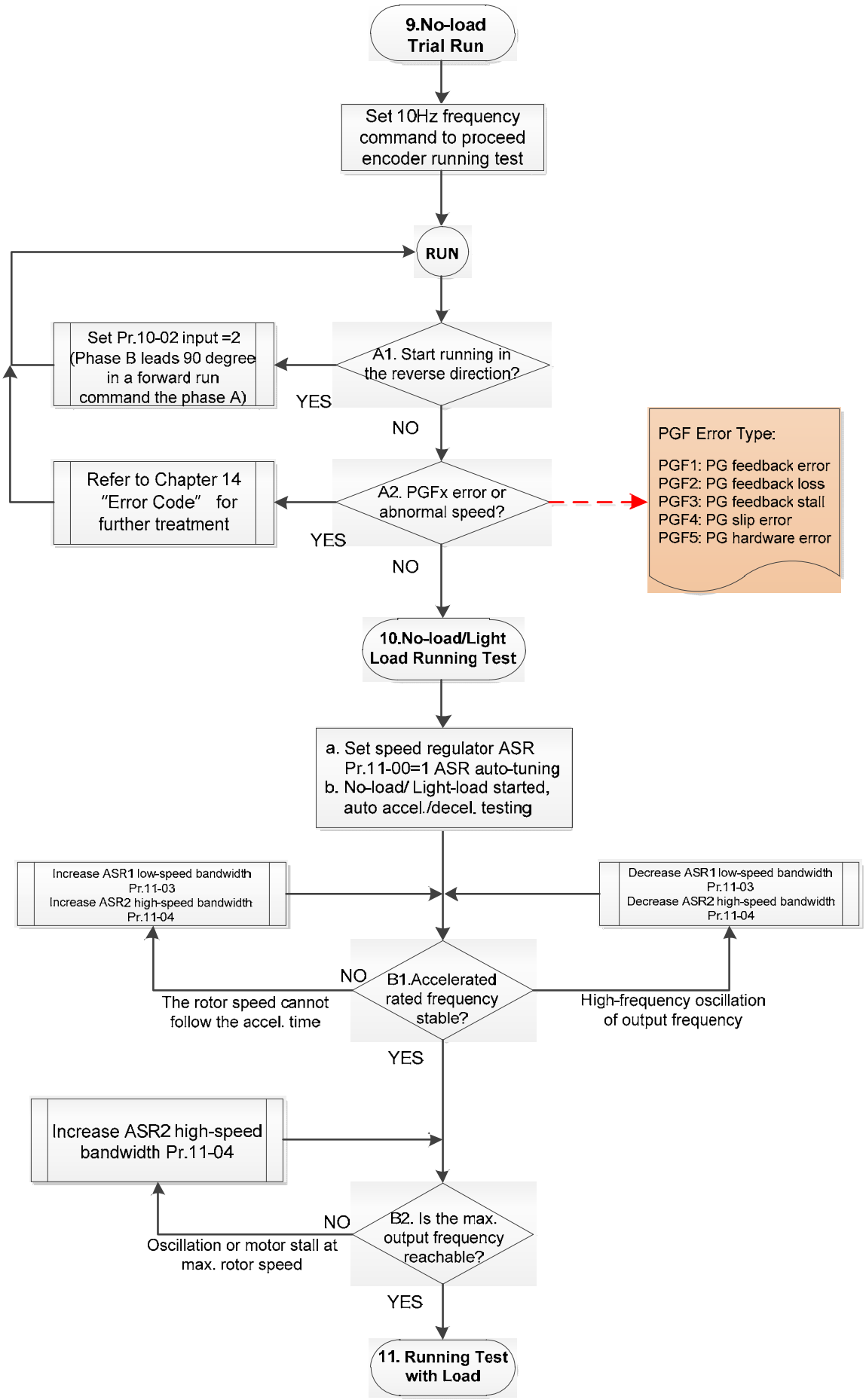

Adjustment for operation with no load / light load

9. No-load trial run

Set the frequency command to 10 Hz to proceed the encoder running test:

A1. If the motor starts in a reverse direction.

If the motor starts in a reverse direction, set the encoder input type Pr. 10-02 = 2 (A-phase and B-phase are pulse inputs, forward direction if B-phase leads A-phase by 90 degrees.)

A2. Observe if a PGFx error is displayed on the keypad, or the motor runs in an abnormal speed.

If the PGFx error is displayed or the motor runs in an abnormal speed, refer to Chapter 14 “Fault Codes and Descriptions” or the following table for PGFx error type and further treatment.

PGF Error (code)	Description	Solution
PGF1 (42)	PG feedback error	Check parameter setting of Pr.10-00–10-02
PGF2 (43)	PG feedback loss	Check the wiring of encoder and PG card
PGF3 (44)	PG feedback stall	Check the wiring of encoder and PG card
PGF4 (45)	PG slip error	Check the pulse setting of Pr.10-01 Check the wiring of encoder and PG card
PGF5 (65)	PG hardware error	Check if the PG card is installed on the correct slot position Check the setting parameter of the encoder

10. No-load / light load running test

a. Set the speed regulator (ASR) as Pr.11-00=1, and set the ASR gain as auto-tuning.

b. Start the motor with no load / light load and proceed acceleration / deceleration test.

B1. Accelerate to the rated frequency and observe if the motor runs stably.

- If the output rotor speed cannot follow the acceleration time, increase Pr.11-04 (ASR2 high-speed bandwidth) or Pr.11-03 (ASR1 low-speed bandwidth).
- If a high-frequency oscillation occurs in the output frequency, decrease Pr.11-04 (ASR2 high-speed bandwidth) or Pr.11-03 (ASR1 low-speed bandwidth).

B2. Accelerate the motor to the maximum frequency and observe if it runs stably.

If an oscillation occurs or motor stalls at maximum rotor speed during operation, increase Pr.11-04 (ASR2 high-speed bandwidth) or Pr.00-17 (Carrier frequency).

Setting curve of speed regulator (ASR) and related parameter:

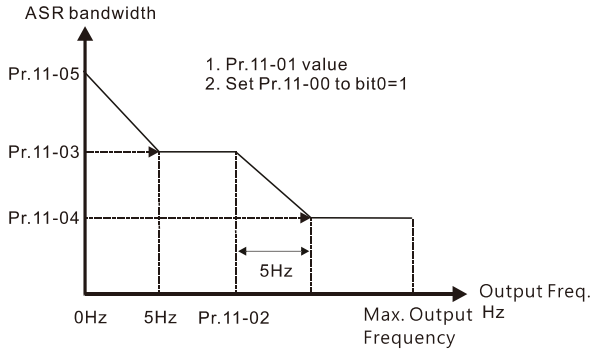

ASR adjustment- auto gain

Parameter	Description	Default
Pr.11-00	System control	0
Pr.11-01	Per unit of system inertia	256
Pr.11-02	ASR1/ASR2 switch frequency (it is suggested to set the switch frequency higher than Pr.10-39)	7.00 Hz
Pr.11-03	ASR1 low-speed bandwidth	10 Hz
Pr.11-04	ASR2 high-speed bandwidth	10 Hz
Pr.11-05	ASR zero-speed bandwidth	10 Hz

III. PM FOCPG adjustment flowchart for operation starts with load

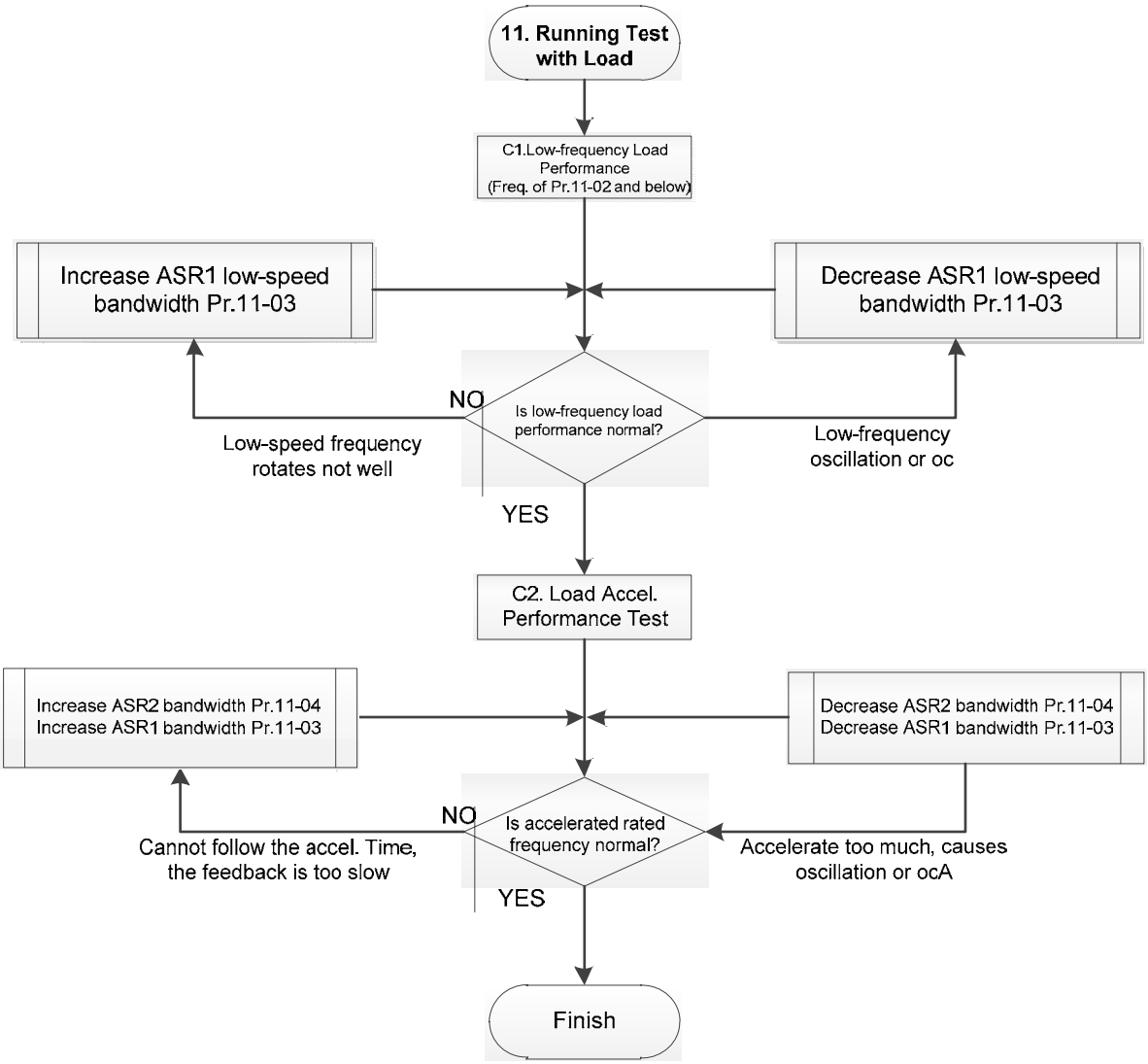

📖 Adjustment for operation with load

C1. Low-frequency load performance, when the drive operates under ASR1 / ASR2 switch frequency (Pr.11-02):

a. If the low-speed frequency cannot start-up with load or the rotor speed is not smooth, increase Pr.11-03 (ASR1 low-speed bandwidth), or increase Pr.11-01 (Per-unit system inertia).

b. If an oscillation or over current (oc) error occurs at low-speed frequency, decrease Pr.11-(ASR1 low-speed bandwidth) or decrease Pr.11-01 (Per-unit system inertia).

C2. With-load accelerating performance testing in heavy-load status, accelerate the motor to the rated rotor speed according to the acceleration time.

- If the motor rotor speed cannot follow the acceleration time, and the response is too slow, increase Pr.11-04 (ASR2 high-speed bandwidth) and Pr.11-03 (ASR1 low-speed bandwidth); if the response speed is still not enough, increase 10% of the per-unit system inertia for Pr.11-01 each time.
- If an excessive acceleration causes an oscillation or ocA error, decrease Pr.11-04 (ASR2 high-speed bandwidth) and Pr.11-03 (ASR1 low-speed bandwidth).

- PM FOCPG adjustment parameters

Refer to Section 12-1 “Description of Parameter Settings” for detailed information.

Parameter	Description	Unit	Default	Setting Range
Encoder Setting Parameters				
Pr.10-00	Encoder type selection	N/A	0	0–5
Pr.10-01	Encoder pulses per revolution	ppr	600	1–20000
Pr.10-02	Encoder input type setting	N/A	0	0–5
Motor Performance Control Parameters				
Pr.11-00	System control	bit	0	0–8
Pr.11-01	Per-unit of system inertia	N/A	256	1–65535
Pr.11-02	ASR1 / ASR2 switch frequency	Hz	7	5.00–599
Pr.11-03	ASR1 low-speed bandwidth	Hz	10	1–100 (PM) 1–40 (IM)
Pr.11-04	ASR2 high-speed bandwidth	Hz	10	1–100 (PM) 1–40 (IM)
Pr.11-05	Zero-speed bandwidth	Hz	10	1–100 (PM) 1–40 (iM)

12-2-3 Induction Motor, Sensorless Field-Oriented Control Adjustment Procedure (IMFOC Sensorless, Pr.00-11=5)

- Control diagram

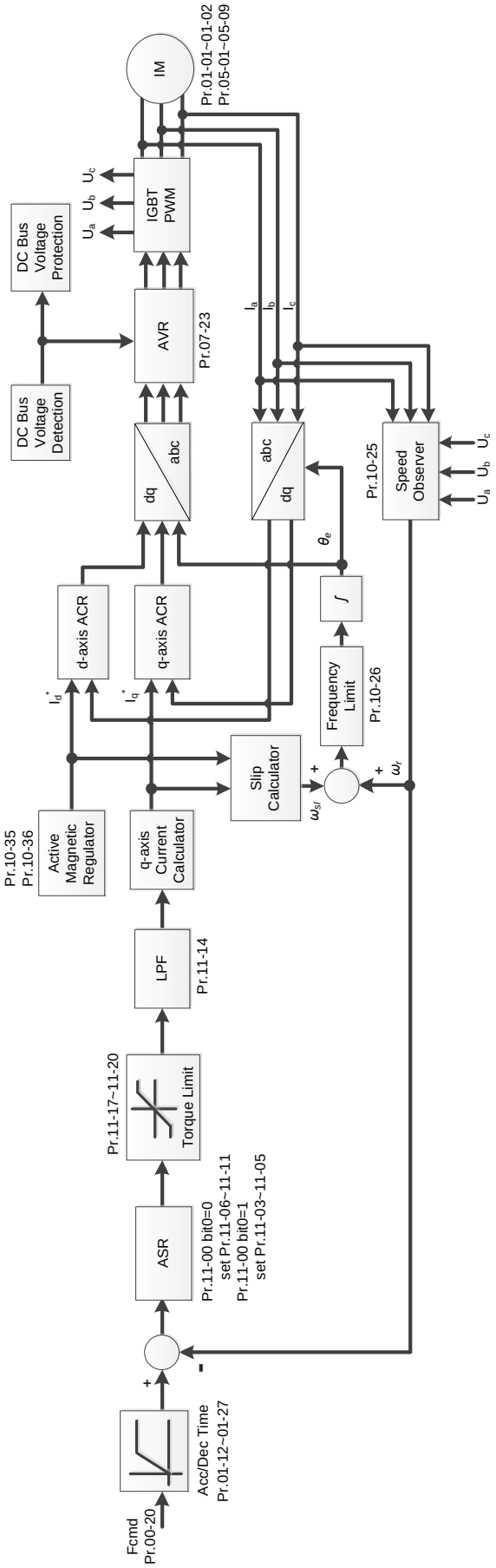

- Adjustment procedure

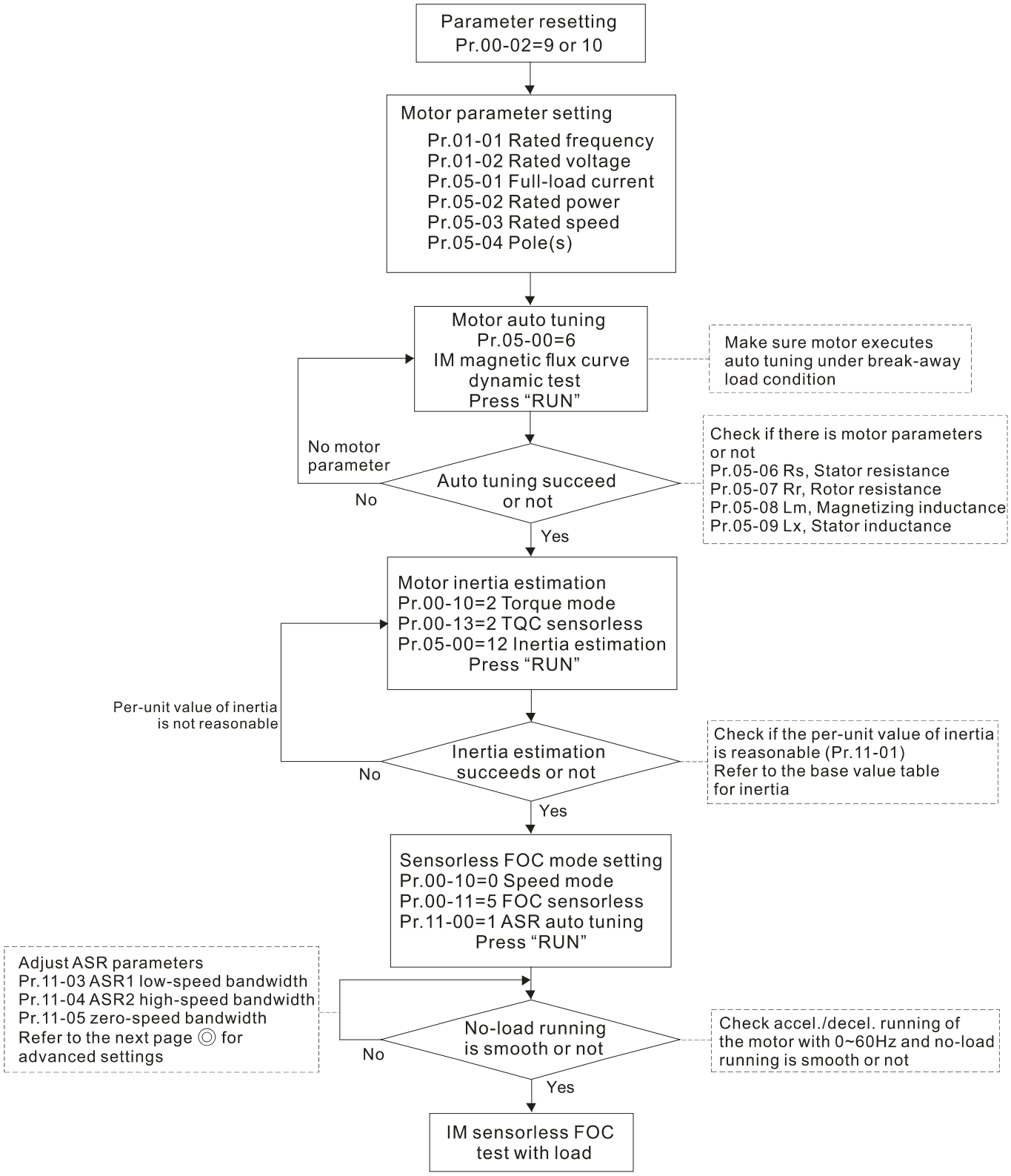

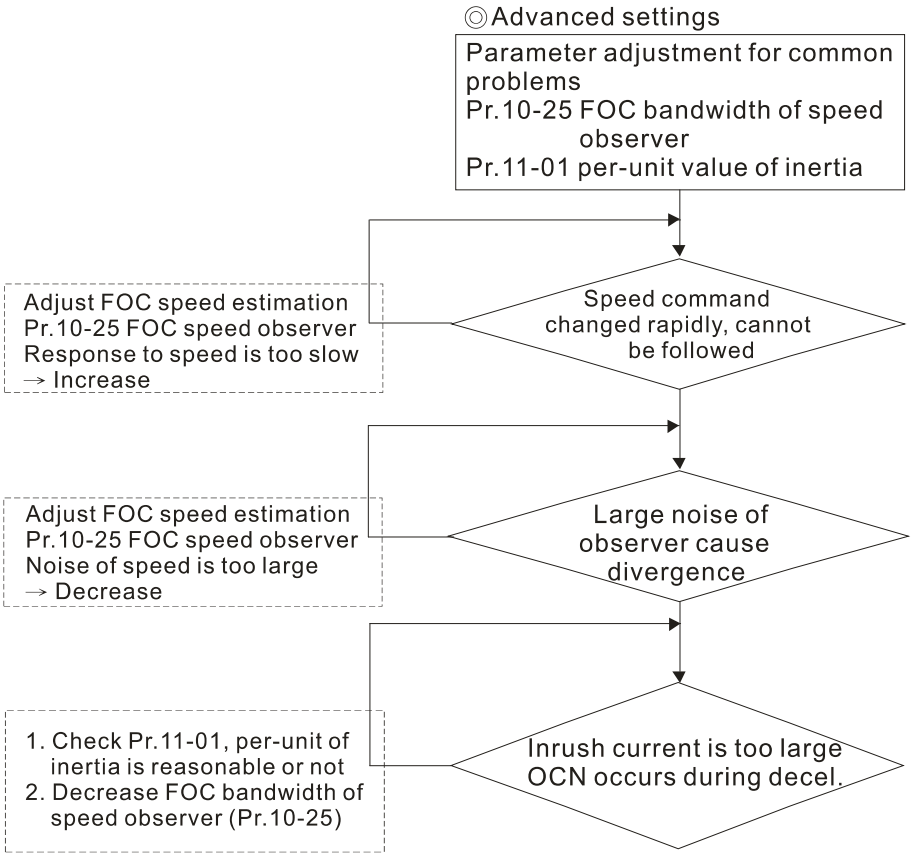

📖 Basic motor parameters adjustment

1. Parameter reset:
   Reset Pr.00-02 = 9 (50 Hz) or 10 (60 Hz) to the default value.
2. Select PM motor type:
   Pr.05-33 = 0 (IM)
3. Motor nameplate parameter setting:

Parameter	Description
Pr.01-01	Rated frequency (Hz)
Pr.01-02	Rated voltage (V_{AC})
Pr.05-01	Full-load current for induction motor 1 (A)
Pr.05-02	Rated power for induction motor 1 (kW)
Pr.05-03	Rated speed for induction motor 1 (rpm)
Pr.05-04	Number of poles for induction motor 1 (poles)

4. Press RUN to start auto-tuning of IM magnetic flux curve dynamic test for Pr.05-00 = 1 or 6 (motor is running). Make sure the motor executes auto-tuning under break-away load condition. Check if there are motor parameters after auto-tuning.

Parameter	Description
Pr.05-06	Stator resistance (Rs) for induction motor 1 (Ω)
Pr.05-07	Rotor resistance (Rr) for induction motor 1 (Ω)
Pr.05-08	Magnetizing inductance (Lm) for induction motor 1 (mH)
Pr.05-09	Stator inductance (Lx) for induction motor 1 (mH)

If an auto-tuning error (AUE) occurs, refer to Chapter 14 “Fault Codes and Descriptions” for further treatment.

AUE Error (code)	Description
AUE (40)	Auto-tuning error
AUE1 (142)	Auto-tuning error 1 (No feedback current error)
AUE2 (143)	Auto-tuning error 2 (Motor phase loss error)
AUE3 (144)	Auto-tuning error 3 (No-load current I_0 measuring error)
AUE4 (148)	Auto-tuning error 4 (Leakage inductance Lsigma measuring error)

5. Execute inertia estimation for IM (optional), press RUN key to start the process.

   Set Pr.00-10=2, torque mode

   Set Pr.00-13=2, IM TQC sensorless

   Set Pr.05-00=12, FOC sensorless inertia estimation

   Check if the estimated value for Pr.11-01 is reasonable (refer to the explanation of Pr.11-00) when the inertia estimation process is finished, the base value table of inertia is as below (unit: kg-cm^2).

HP	kW	Inertia	HP	kW	Inertia	HP	kW	Inertia
1	0.7	2.3	30	22	176.5	215	160	2800.0
2	1.5	4.3	40	30	202.5	250	186	3550.0
3	2.2	8.3	50	37	355.5	300	224	5139.0
5	3.7	14.8	60	45	410.8	375	279	5981.0
7	5.5	26.0	75	56	494.8	425	317	5981.0
10	7.5	35.8	100	75	1056.5	475	354	5981.0
15	11	74.3	120	89	1275.3	600	447	5981.0
20	15	95.3	150	112	1900.0	650	485	5981.0
25	18	142.8	175	130	2150.0	750	559	5981.0

6. Execute IMFOC Sensorless mode, set up the following parameters:

   Set Pr.00-10=0, speed mode

   Set Pr.00-11=5, IMFOC Sensorless

   Set Pr.11-00 bit0 =1, use ASR gain auto-tuning

   Press RUN key and start the no load test. Accelerate the motor to the rated speed, and then decelerate to stop, check if the motor runs smoothly.

   - If the motor runs smoothly, then the setting for IMFOC Sensorless is completed.
   - If the motor does not run smoothly or fails to start at low frequency, then refer to the following steps for adjustment.

7. Select auto-tuning gain (Pr.11-00 bit0=1), adjust ASR parameters according to the speed response.

   Set Pr.11-00 bit0 =1, use auto-tuning for ASR

   Set Pr.11-03 ASR1 low-speed bandwidth (When the acceleration of low-speed cannot follow the acceleration command, increase the low-speed bandwidth)

   Set Pr.11-04 ASR2 high-speed bandwidth (When the acceleration in high speed causes vibration or cannot follow the acceleration command, increase high-speed bandwidth)

   Set Pr.11-05 Zero-speed bandwidth (If the response of start-up is slow or incapable, increase zero-speed bandwidth)

   - The bigger the setting value for ASR bandwidth, the faster the response.
   - The low-speed bandwidth cannot be set too high, or the observer will diverge.

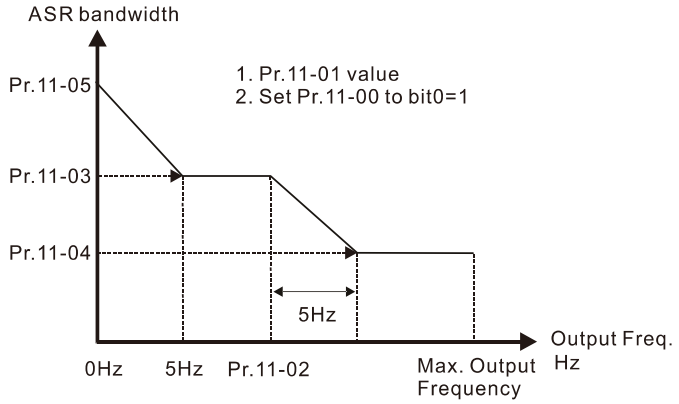

8. Adjust the setting of FOC speed observer and per-unit value of inertia (common problems)
   - Pr.10-25: Set up FOC bandwidth of speed observer

     Situation 1. Speed command changes rapidly, but speed response cannot follow.

     (Speed response is too slow→Increase the setting value)

     Situation 2. The noise of the observer is too large, and causes the operation diverged.

     (Speed noise is too large→Decrease)
   - Pr.11-01: Set up per unit of system inertia

     Situation 1. The inrush current is too high at start-up, and causes an oc error.

     Situation 2. An ocn error occurs during RUN or STOP, and the motor runs randomly.

     a. Check Pr.11-01 whether the JM per-unit of system inertia is too large.

     b. Decrease Pr.10-25 FOC bandwidth for speed observer or Pr.11-05 zero-speed bandwidth.

- IMFOC Sensorless adjustment parameters

  Refer to Section 12-1 Description of Parameter Settings for more details

Parameter	Description	Unit	Default	Settings
00-11	Speed control mode		0	0–8
01-01	Rated frequency (Hz)	Hz	60.00 / 50.00	0.00–599.00
01-02	Rated voltage (V_{AC})	V	Depending on the model power	Depending on the model power
05-00	Motor parameter auto-tuning		0	0–13
05-02	Rated power for induction motor 1 (kW)	kW	Depending on the model power	0.00–655.35
05-03	Rated speed for induction motor 1 (rpm)	rpm	Depending on the motor's number of poles	0–xxxx (Depending on the motor's number of poles)
05-04	Number of poles for induction motor 1 (poles)		4	2–64
05-05	No-load current for induction motor 1 (A)		Depending on the model power	0.00–Pr.05-01 default
05-06	Stator resistance (Rs) for induction motor 1 (Ω)	Ω	Depending on the model power	0.000–65.535

Parameter	Description	Unit	Default	Settings
05-07	Rotor resistance (Rr) for induction motor 1 (Ω)	Ω	0.000	0.000–65.535
05-08	Magnetizing inductance (Lm) for induction motor 1 (mH)	mH	0.0	0.0–6553.5
05-09	Stator inductance (Lx) for induction motor 1 (mH)	mH	0.0	0.0–6553.5
10-25	FOC bandwidth for speed observer	Hz	40.0	20.0–100.0
11-00	System control		513	0–65535
11-01	Per unit of system inertia	pu	256	1–65535
11-02	ASR1 / ASR2 switch frequency	Hz	7.00	5.00–599.00
11-03	ASR1 low-speed bandwidth	Hz	10	1–40 Hz (IM) / 1–100 Hz (PM)
11-04	ASR2 high-speed bandwidth	Hz	10	1–40 Hz (IM) / 1–100 Hz (PM)
11-05	Zero-speed bandwidth	Hz	10	1–40 Hz (IM) / 1–100 Hz (PM)

12-2-4 Permanent-Magnet Synchrounous, Sensorless Field-Oriented Control Adjustment Procedure (PM Sensorless, Pr.00-11 = 6)

(applicable for C2000 Plus firmware version after V3.05)

- Control diagram

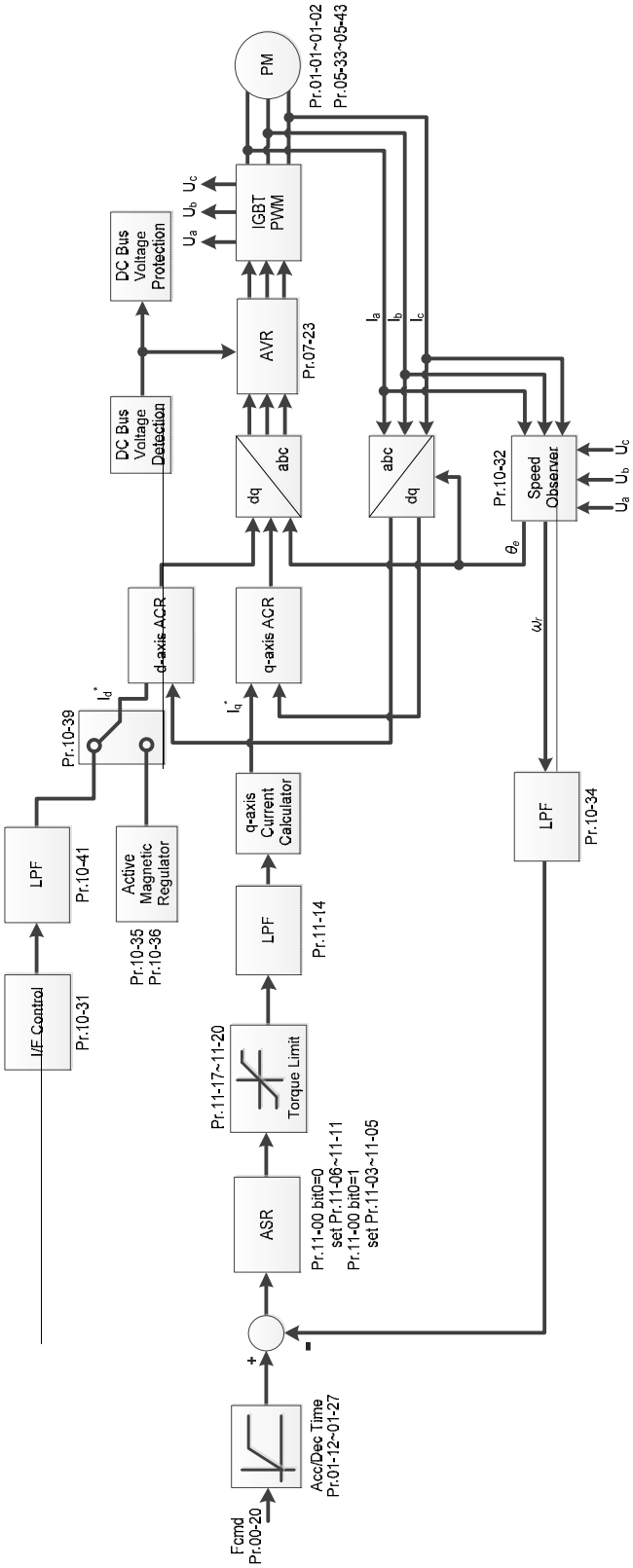

* PMFOC Sensorless control is the control method dedicated for PM; it uses the high salient pole characteristic of PM to detect positions of NS magnetic poles. By doing this, it calculates the motor's rotor position at low-speed frequency.

- PM Sensorless adjustment procedure
  (The number marked on the procedure corresponds to the number of following adjustment explanations)

  I. PM Sensorless motor parameters adjustment flowchart

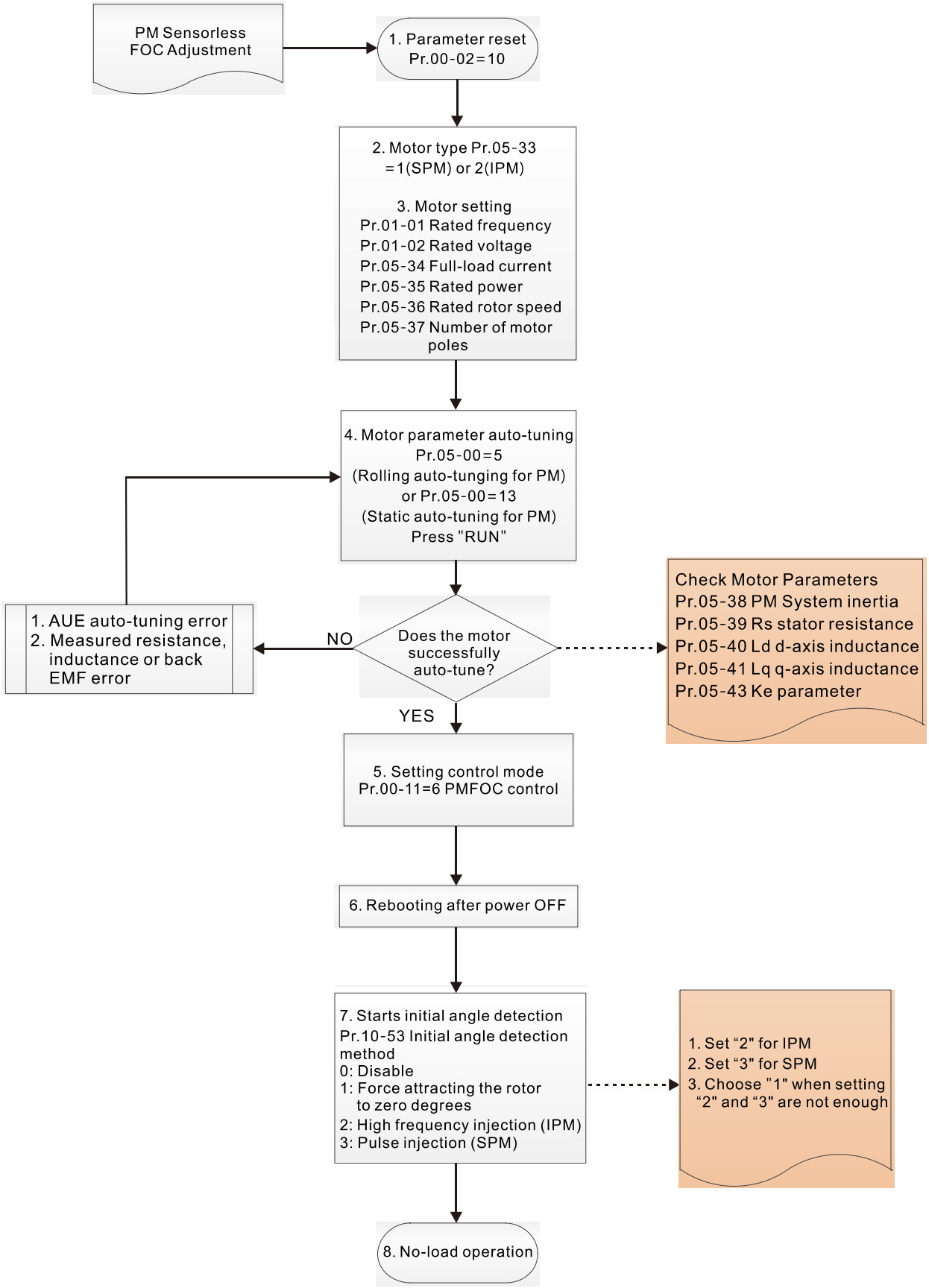

Motor parameters adjustment

1. Parameter reset:

   Reset Pr.00-02 = 10 to the default value.

2. Select motor type:

   Pr.05-33 = 1 or 2 (SPM or IPM)

3. Motor nameplate parameter setting:

Parameter	Description
Pr.01-01	Rated frequency (Hz)
Pr.01-02	Rated voltage (V_{AC})
Pr.05-34	Rated current (A)
Pr.05-35	Rated power (kW)
Pr.05-36	Rated rotor speed (rpm)
Pr.05-37	Number of motor poles (poles)
Pr.05-38	System inertia for PM (kg-cm^2)

4. PM parameter auto-tuning:

   Set Pr.05-00 = 5 (rolling auto-tuning for PM, with no load) or 13 (static auto-tuning for PM) and press RUN key to finish motor auto-tuning, then you will get the following parameters:

Parameter	Description
Pr.05-39	Stator resistance for a permanent magnet motor (Ω)
Pr.05-40	Permanent magnet motor Ld (mH)
Pr.05-41	Permanent magnet motor Lq (mH)
Pr.05-43	Ke parameter of a permanent magnet motor ($V_{phase \cdot rms}$ / krpm) (When Pr.05-00 = 5, the Ke parameter is measured based on the actual motor rotation.) (When Pr.05-00 = 13, the Ke parameter is automatically calculated based on the motor power, current and rotor speed.)

   If an auto-tuning error (AUE) occurs, refer to Chapter 14 “Error Codes and Descriptions” for further treatment.

AUE Fault code	Description
AUE (40)	Auto-tuning error
AUE 1 (142)	Auto-tuning error 1 (no feedback current error)
AUE 2 (143)	Auto-tuning error 2 (motor phase loss error)

5. Set control mode

   Set Pr.00-11 = 6 PM Sensorless FOC control mode

6. After auto-tuning, re-power on after power off.

7. Measure the initial magnetic pole angle of PM

   Set Pr.10-53 PM initial rotor position detection method:

   0: Disabled

   1: Force attracting the rotor to zero degrees

   2: High frequency injection

   3: Pulse injection

   * For IPM, the setting value is suggested to be 2; for SPM, the setting value is suggested to be 3. You can choose the setting 1 if the result is not good of setting as 2 or 3.

II. PM Sensorless adjustment flowchart for operation without load / with light load

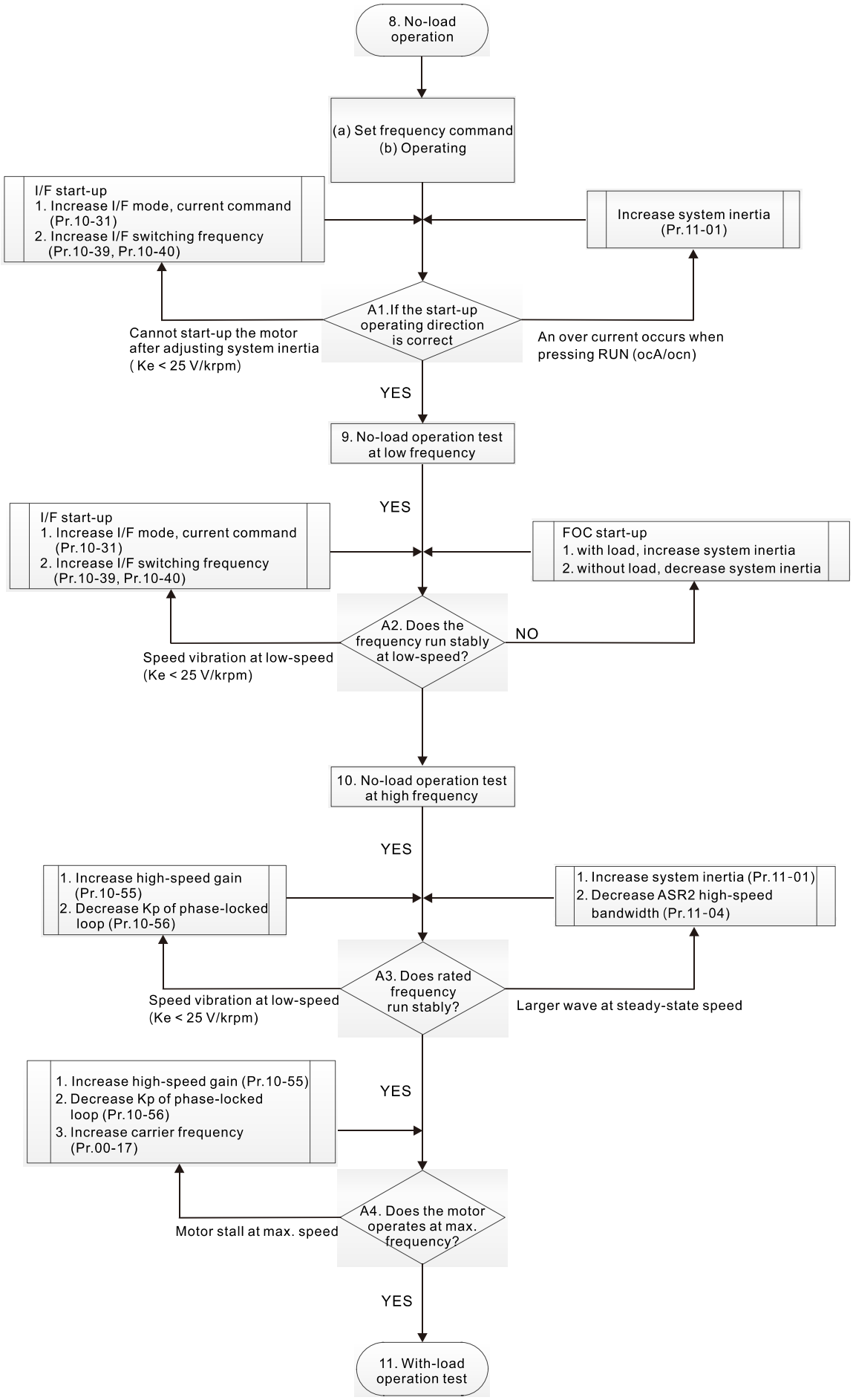

No-load / light-load operation adjustment

8. Start the motor with no load

(a) Set Pr.11-00 = 1 Auto-tuning for ASR

(b) Start the motor without load, and operates the motor to 1/2 of rated rotor speed

A1. If the start direction is wrong or starting rotation is not smooth (ocA), adjust Pr.11-01 (system inertia). When the Ke parameter (Pr.05-43) is < 25 V, increase Pr.10-31 (I/F mode, current command) or Pr.10-39, Pr.10-40 (switch the frequency from I/F mode to PM Sensorless mode).

A2. If the motor starts up with a reverse direction, but operates with a correct direction, adjust Pr.10-52 (injection magnitude) when using High frequency injection to detect the PM initial rotor position (Pr.10-53 = 2); increase Pr.10-42 (initial angle detection pulse value) to improve the accuracy of angle detection when using Pulse injection to detect the PM initial rotor position (Pr.10-53 = 3).

9. Acceleration test with no load / light load

A3. Accelerate the motor to the rated frequency, and check if it operates stably.

a. If the motor output frequency presents steady state speed wave, increase Pr.11-04 (ASR2 high-speed bandwidth) or Pr.11-01 (per-unit of system inertia).

b. If the motor output frequency presents large fluctuations or diverges, increase Pr.10-55 (magnetic flux linkage estimate high-speed gain) or decrease Pr.10-56 (Kp of phase-locked loop).

A4. Accelerate the motor to the maximum frequency, and check if it operates stably.
If the motor stalls at the maximum operation speed, increase Pr.10-55 (magnetic flux linkage estimate high-speed gain) and Pr.00-17 (carrier frequency), or decrease Pr.10-56 (Kp of phase-locked loop).

Setting curve for speed regulator (ASR) and related parameters:

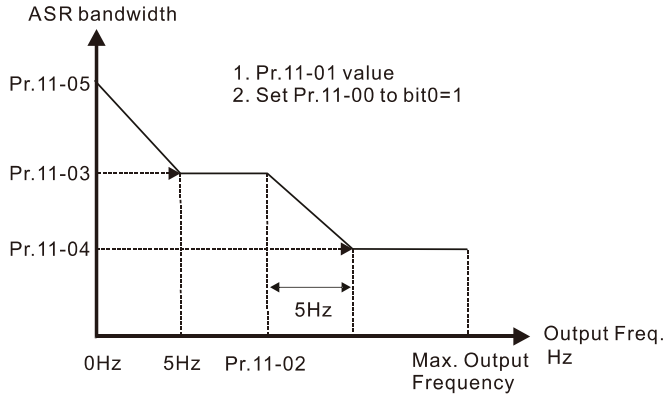

ASR adjustment- auto gain

Parameter	Description	Default
Pr.11-00	System control	0
Pr.11-01	Per-unit of system inertia	256
Pr.11-02	ASR1 / ASR2 switch frequency (set the switch frequency > Pr.10-39)	7 Hz
Pr.11-03	ASR1 low-speed bandwidth	10 Hz
Pr.11-04	ASR2 high-speed bandwidth	10 Hz
Pr.11-05	Zero-speed bandwidth	10 Hz

III. PM Sensorless adjustment flowchart for operation starts with load

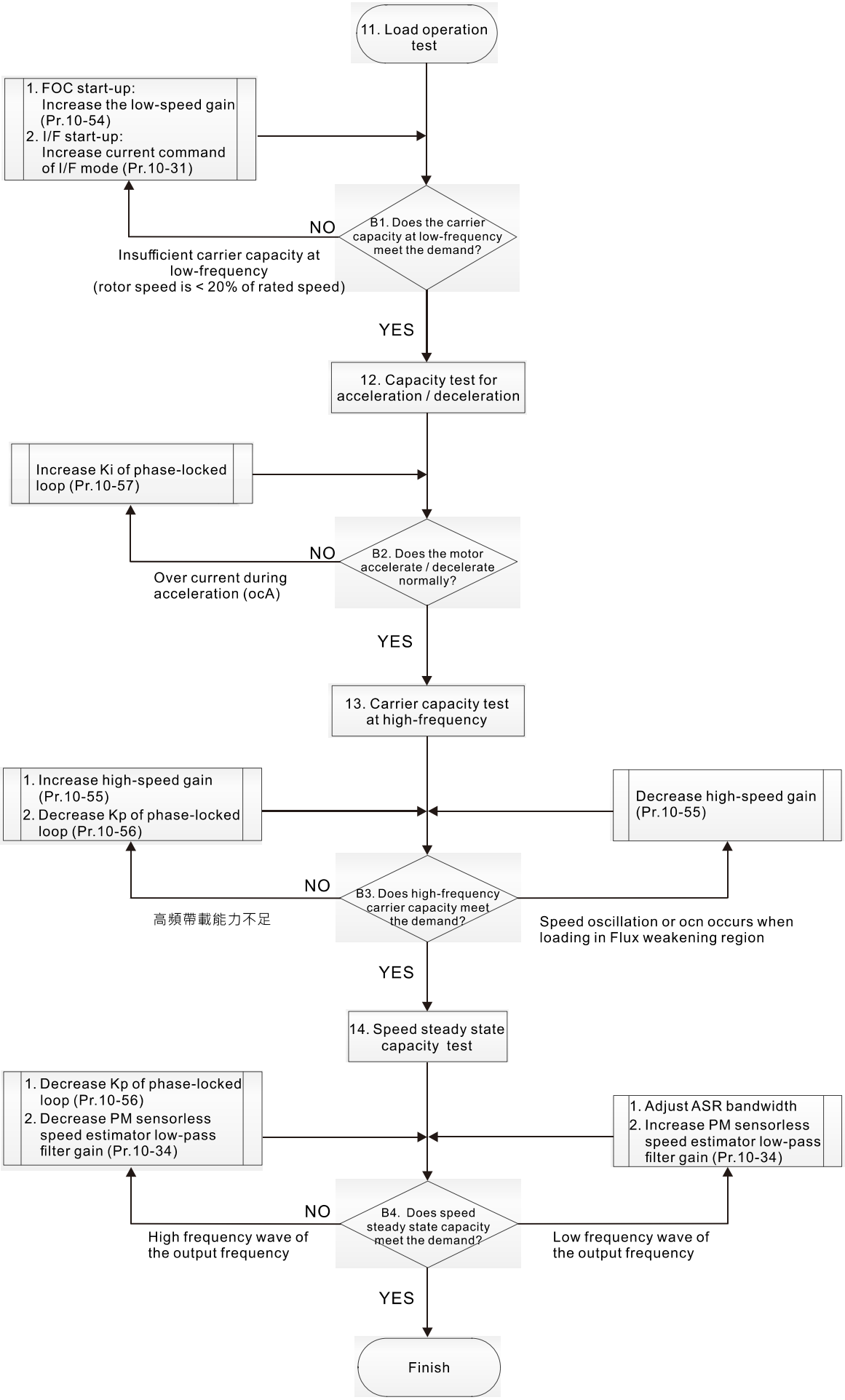

📖 Load operation adjustment and steady state adjustment at constant speed

11. Load operation test

B1. Low-frequency carrier capacity test (the output frequency is < 20% of rated speed):

a. If the frequency switch from I/F mode to PM Sensorless is zero (Pr.10-39 = 0 Hz), increase Pr.10-54 (magnetic flux linkage estimate low-speed gain).

b. If the output frequency is less than Pr.10-39 (frequency to switch from I/F mode to PM Sensorless), increase Pr.10-31 (I/F mode, current command).

B2. Carrier capacity test during acceleration

In heavy load operation, accelerate the motor to rated speed according to the acceleration time:

a. If the motor responds too slowly or an over current occurs during the acceleration, increase Pr.10-57 (Ki phase-locked loop).

12. Steady state test at constant speed, check if the motor operates stably at constant speed.

a. If the motor's output frequency presents periodic low-frequency wave, increase Pr.10-34 (PM sensorless speed estimator low-pass filter gain), or adjust the ASR parameters.

b. If the motor's output frequency presents extreme vibration, decrease Pr.10-34 (PM sensorless speed estimator low-pass filter gain) or Pr.10-56 (Kp phase-locked loop).

- PM Sensorless adjustment parameters

Refer to Section 12-1 "Description of Parameter Settings" for detailed information.

Parameter	Description	Unit	Default	Settings
Pr.10-31	I/F mode, current command	%	40	150
Pr.10-34	PM sensorless speed estimator low-pass filter gain	NA	1.00	0.00–655.35
Pr.10-39	Frequency to switch from I/F mode to PM sensorless mode	Hz	20.0	0.0–599.0
Pr.10-40	Frequency to switch from PM sensorless mode to I/F mode	Hz	20.0	0.0–599.0
Pr.10-54	Magnetic flux linkage estimate low-speed gain (applied to 230V / 460V models)	%	100	10–1000
Pr.10-55	Magnetic flux linkage estimate high-speed gain (applied to 230V / 460V models)	%	100	10–1000
Pr.10-56	Kp of phase-locked loop (applied to 230V / 460V models)	%	100	10–1000
Pr.10-57	Ki of phase-locked loop (applied to 230V / 460V models)	%	100	10–1000
Initial Angle Estimating Parameters				
Pr.10-42	Initial angle detection pulse value	NA	0.5	0.0–3.0
Pr.10-51	Injection frequency (applicable when Pr.10-53 = 2)	Hz	500	0–1200
Pr.10-52	Injection magnitude (applicable when Pr.10-53 = 2)	V	15.0/30.0	0.0–200.0

Parameter	Description	Unit	Default	Settings
Pr.10-53	PM initial rotor position detection method 0: Disable 1: Force attracting the rotor to zero degrees 2: High frequency injection 3: Pulse injection	NA	0	0–3
Motor Performance Control Parameters				
Pr.11-00	System control	bit	0	0–8
Pr.11-02	ASR1 / ASR2 switch frequency	Hz	7.0	5.0–599.0
Pr.11-03	ASR1 low-speed bandwidth	Hz	10	1–100 (PM) 1–40 (IM)
Pr.11-04	ASR2 high-speed bandwidth	Hz	10	1–100 (PM) 1–40 (IM)
Pr.11-05	Zero-speed bandwidth	Hz	10	1–100 (PM) 1–40 (IM)

12-2-5 Interior Permanent-Magnet Synchrounous, Sensorless Fieled-Oriented Control Adjustment Procedure (IPM Sensorless, Pr.00-11=7)

(applicable for C2000 Plus firmware version after V3.05)

- Control diagram

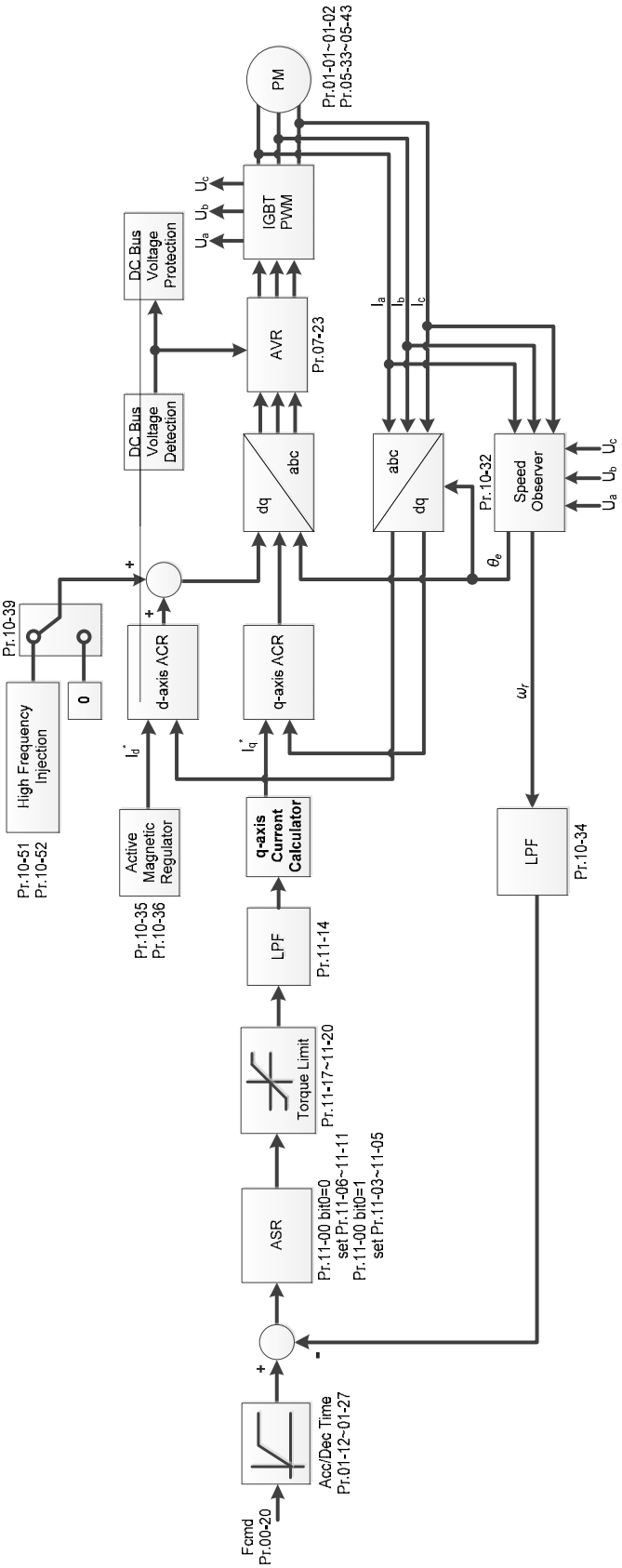

* IPM Sensorless FOC control is the control method dedicated for IPM, it uses the high salient pole characteristic (Lq > Ld) of IPM to detect the positions of NS magnetic poles. By doing this, it calculates the motor's rotor position at low-speed frequency.

- IPM Sensorless adjustment procedure
  (The number marked on the procedure corresponds to the number of following adjustment explanations)

  I. IPM Sensorless adjustment flowchart

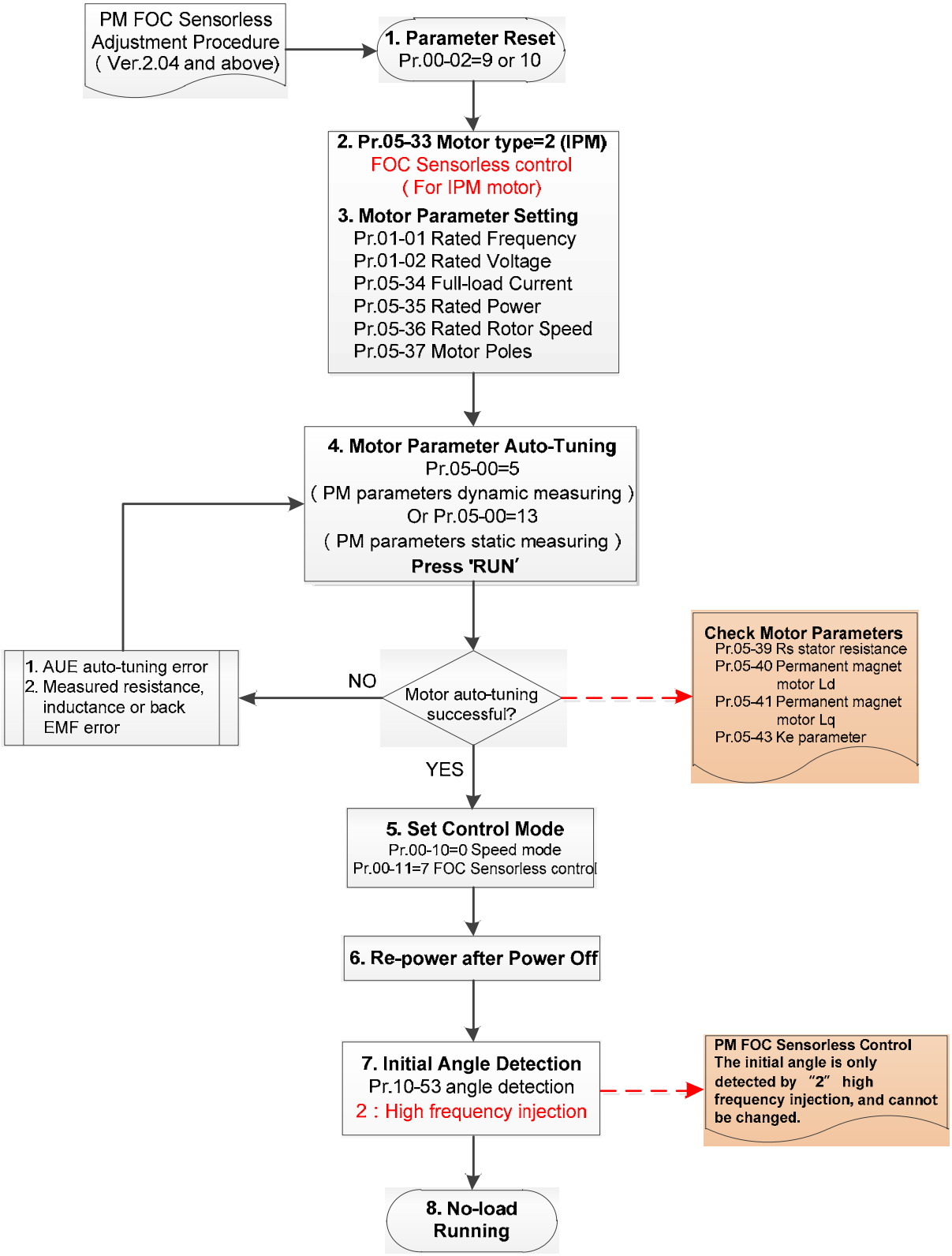

📖 Basic motor parameters adjustment

1. Parameter reset:

   Reset Pr.00-02=9 (50Hz) or 10 (60Hz) to the default value.

2. Select IPM motor type:

   Pr.05-33=2 (IPM)

3. Motor nameplate parameter setting:

Parameter	Description
Pr.01-01	Rated frequency (Hz)
Pr.01-02	Rated voltage (V_{AC})
Pr.05-33	PM motor type (IPM or SPM)
Pr.05-34	Rated current (A)
Pr.05-35	Rated power (kW)
Pr.05-36	Rated rotor speed (RPM)
Pr.05-37	Number of poles for the motor (poles)

4. PM parameter auto-tuning:

   Set Pr.05-00 = 5 (rolling auto-tuning for PM, with no load) or 13 (static auto-tuning for PM) and press RUN key to finish motor auto-tuning, then you will get the following parameters:

Parameter	Description
Pr.05-39	Stator resistance for a permanent magnet motor (Ω)
Pr.05-40	Permanent magnet motor Ld (mH)
Pr.05-41	Permanent magnet motor Lq (mH)
Pr.05-43	Ke parameter of a permanent magnet motor ($V_{phase \cdot rms}$ / krpm) (When Pr.05-00=5, the Ke parameter is measured based on the actual motor rotation.) (When Pr.05-00=13, the Ke parameter is automatically calculated based on the motor power, current and rotor speed.)

   If an auto-tuning error (AUE) occurs, refer to Chapter 14 “Error Codes and Descriptions” for further treatment.

AUE Error (code)	Description
AUE (40)	Auto-tuning error
AUE1 (142)	Auto-tuning error 1 (No feedback current error)
AUE2 (143)	Auto-tuning error 2 (Motor phase loss error)
AUE3 (144)	Auto-tuning error 3 (No-load current I_0 measuring error)
AUE4 (148)	Auto-tuning error 4 (Leakage inductance Lsigma measuring error)

5. Set control mode

   Control mode for the drive: Pr. 00-10 = 0: Speed mode

   Control mode for the motor: Pr. 00-11 = 7: Interior PM FOC Sensorless

6. After auto-tuning, cycle the power.

7. Measure the initial magnetic pole angle of PM

   When Pr.00-11=7 PM FOC Sensoreless mode, the initial magnetic pole angle detection method is high frequency injection.

II. IPM Sensorless adjustment flowchart for operation without load / with light load

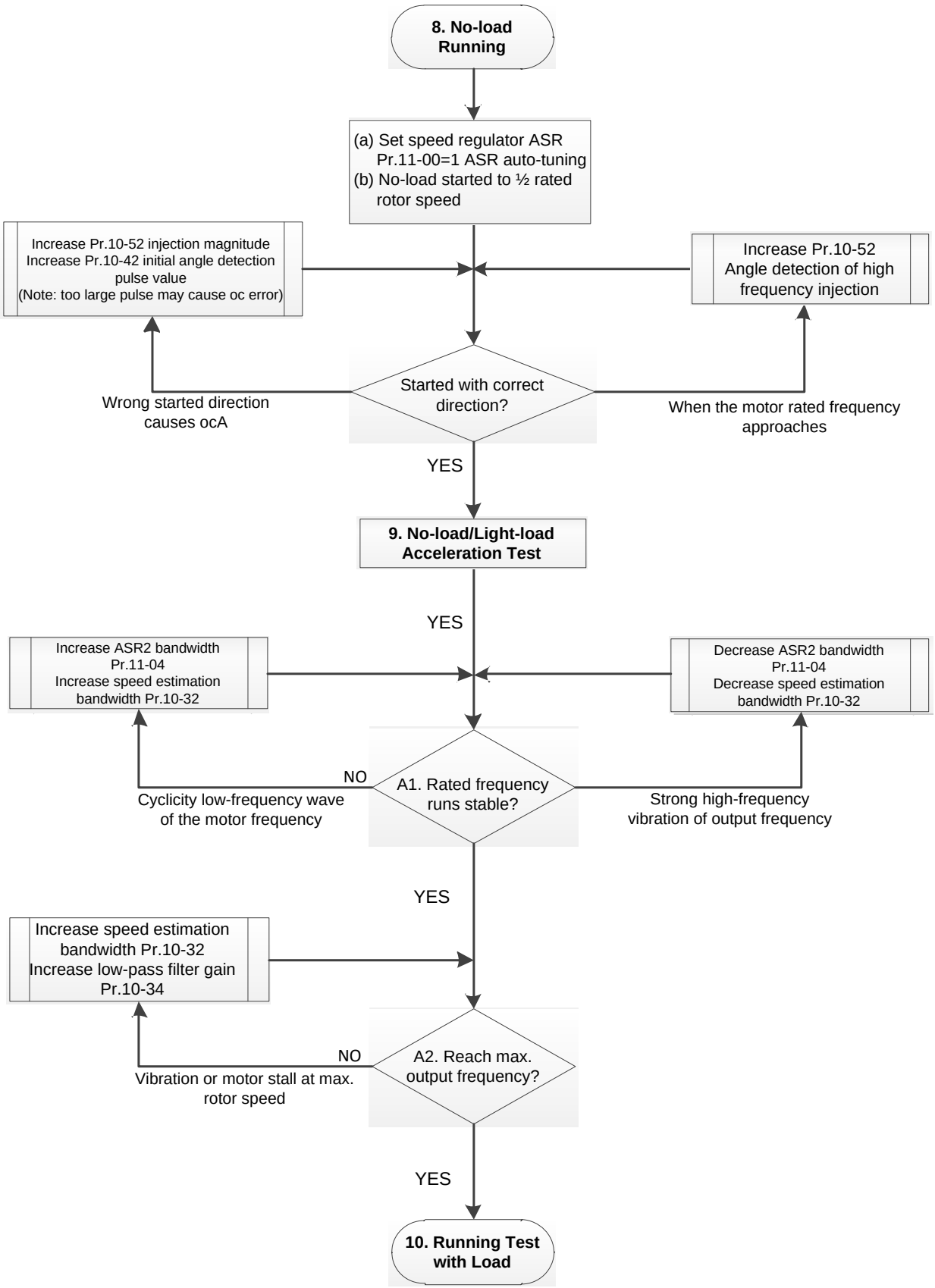

📖 No-load / light-load operation adjustment

8. Start the motor with no-load

(a) Set Pr.11-00 = 1 Auto-tuning for ASR and APR

(b) Start the motor without load, and operates the motor to 1/2 of rated rotor speed

a. If the start direction is wrong, starting rotation is not smooth (ocA) or the motor salient ratio (Lq / Ld) is low, increase Pr. 10-52 (injection magnitude) and Pr. 10-42 (initial angel detection pulse value) to improve the accuracy of the angle detection.

b. If Pr. 10-51 (injection frequency) is close to the rated motor frequency (Pr. 01-01), then increase Pr.10-51 to avoid the angle detection difference caused by motor rated frequency.

9. Acceleration test with no load / light load

A1. Accelerate to rated frequency and observe if the motor operates stably.

a. If the motor output rotor speed presents periodic low-frequency wave, increase Pr. 11-04 (ASR2 high-speed bandwidth), or increase Pr. 10-32 (PM FOC sensorless speed estimator bandwidth).

b. If the output frequency reflects high-frequency vibration, decrease Pr.11-04 or decrease Pr.10-32.

A2. Accelerate the motor to the maximum frequency, and observe if it operates stably.

If the motor stalls when accelerating to the maximum rotor speed, increase Pr.10-32 (PM FOC sensoress speed estimator bandwidth) and Pr.10-34 (PM sensorless speed estimator low-pass filter gain).

Setting curve for speed regulator (ASR) and related parameters:

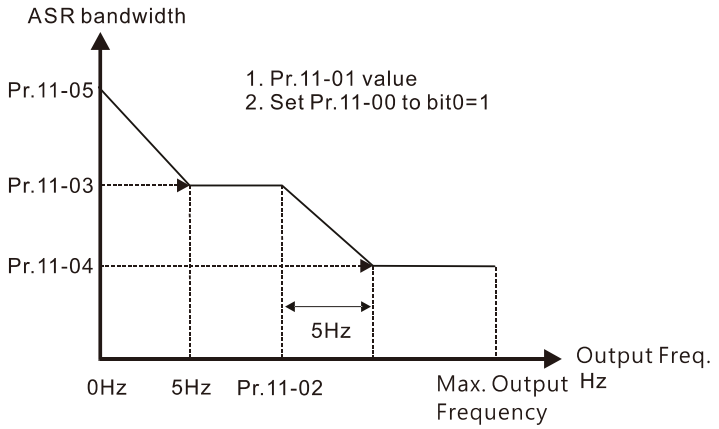

ASR adjustment- auto gain

Parameter	Description	Default
Pr.11-00	System control	0
Pr.11-01	Per unit of system inertia	256
Pr.11-02	ASR1 / ASR2 switch frequency (it is suggested to set the switch frequency higher than Pr.10-39)	7 Hz
Pr.11-03	ASR1 low-speed bandwidth	10 Hz
Pr.11-04	ASR2 high-speed bandwidth	10 Hz
Pr.11-05	Zero-speed bandwidth	10 Hz

III. IPM Sensorless adjustment flowchart for operation starts with load

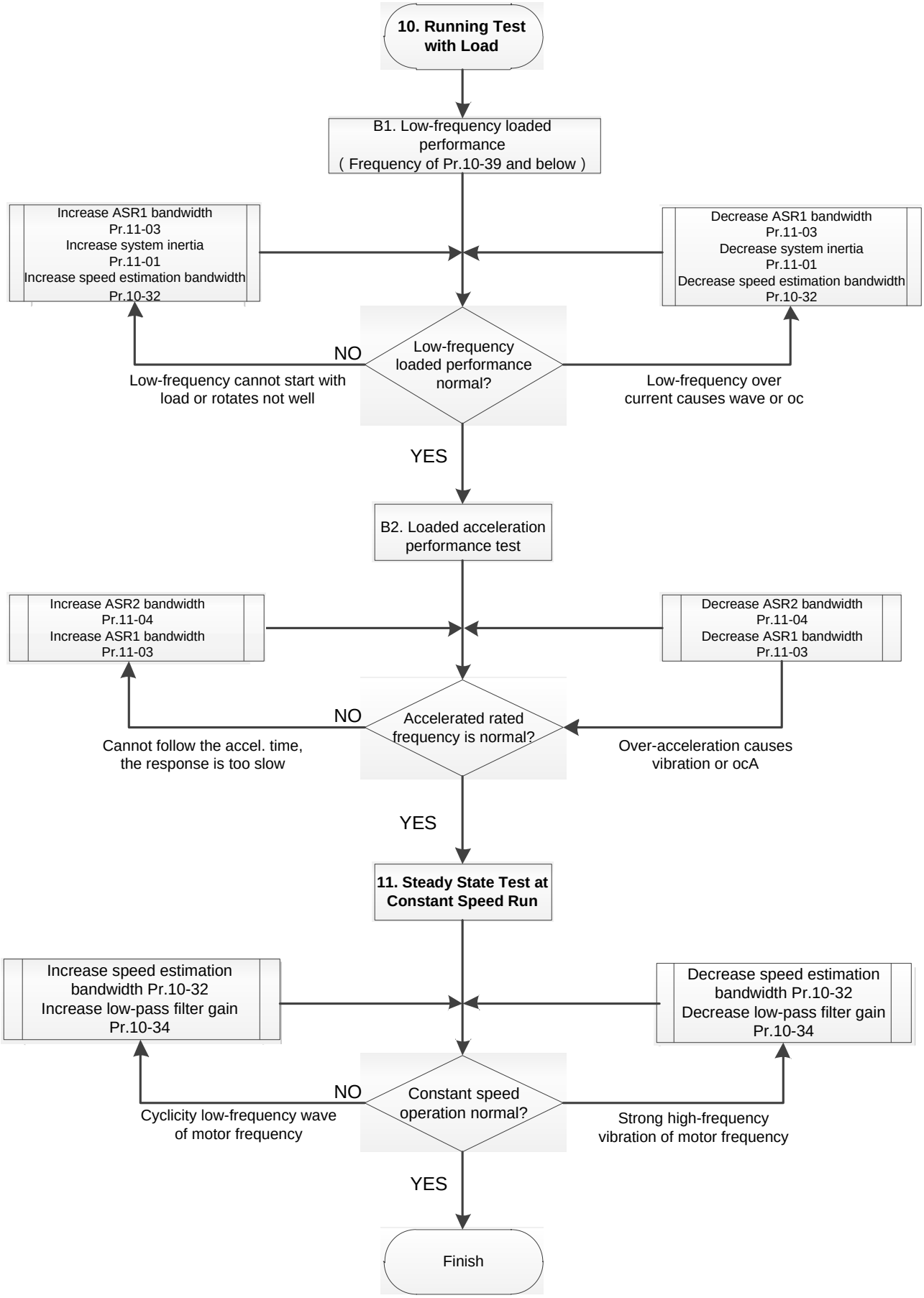

📖 Load operation adjustment

1. Load operating test

B1. Low-frequency loading performance, when the switch frequency is below Pr.10-39:

a. When the low-frequency cannot start the motor with load, or the rotor speed is not smooth, increase Pr.11-03 (ASR1 low-speed bandwidth) or Pr.11-01 (per-unit of system inertia); if the above adjustment cannot meet the requirement, then increase Pr.10-32 (PM FOC sensorless speed estimator bandwidth).

b. When frequency outputs, low-frequency operating current is large or an oc error occurs, decrease Pr.11-03 and Pr.11-01; or decrease Pr.10-32.

B2. Acceleration performance test under heavy-load status, accelerate the motor to rated rotor speed according to the acceleration time:

a. If the motor cannot follow the acceleration time, and the response is too slow, increase Pr.11-04 (ASR2 high-speed bandwidth) and Pr.11-03 (ASR1 low-speed bandwidth).

b. If an excessive acceleration causes vibration or ocA error, decrease Pr.11-04 and Pr.11-03.

2. Stability test at constant speed operation: if the motor operates stably at constant speed

b. If the motor output rotor speed presents periodic low-frequency wave, increase Pr. 10-34 (PM sensorless speed estimator low-pass filter gain), or increase Pr. 10-32 (PM FOC sensorless speed estimator bandwidth).

c. If the output frequency reflects high-frequency vibration, decrease Pr. 10-34 or decrease Pr. 10-32.

- IPM Sensorless adjustment parameters

Refer to Section 12-1 Description of Parameter Settings for more details.

Parameter	Description	Unit	Default	Setting Range
Pr.10-32	PM FOC sensorless speed estimator bandwidth	Hz	5.00	0.00–600
Pr.10-34	PM sensorless speed estimator bandwidth	N/A	1.00	0.00–655.35
Pr.10-35	AMR (Kp) gain	N/A	1.00	0.00–3.00
Pr.10-36	AMR (Ki) gain	N/A	0.20	0.00–3.00
Pr.10-39	Frequency point to switch from I/F mode to PM sensorless mode	Hz	20.00	0.00–599
Pr.10-40	Frequency point to switch from PM sensorless mode to V/F mode	Hz	20.00	0.00–599
Pr.10-42	Initial angle detection pulse value	N/A	1.0	0.0–3.0
Initial Angle Estimating Parameters				
Pr.10-51	Injection frequency (for IPM)	Hz	500	0–1200
Pr.10-52	Injection magnitude (for IPM)	V	15.0 / 30.0	0.0–200.0
Pr.10-53	PM initial rotor position detection method	N/A	0	0–3
Motor Performance Control Parameters				
Pr.11-00	System control	bit	0	0–8
Pr.11-02	ASR1 / ASR2 switch frequency	Hz	7	5.00–599
Pr.11-03	ASR1 low-speed bandwidth	Hz	10	1–100 (PM) 1–40 (IM)
Pr.11-04	ASR2 high-speed bandwidth	Hz	10	1–100 (PM) 1–40 (IM)
Pr.11-05	Zero-speed bandwidth	Hz	10	1–100 (PM) 1–40 (IM)

12-2-6 Synchronous Reluctance Motor, Sensorless Field-Oriented Control Adjustment Procedure (SynRM Sensorless, Pr.00-11=8)

(applicable for C2000 Plus firmware version after V3.06)

- Control diagram

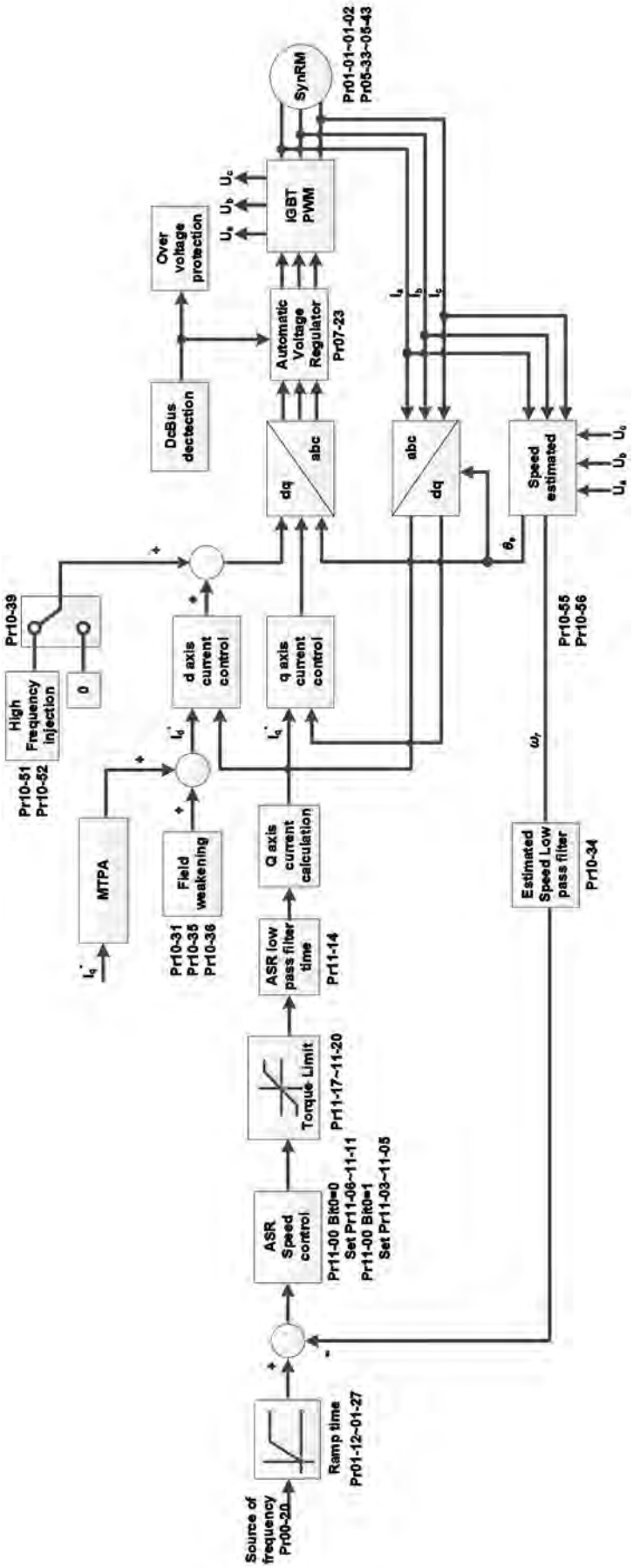

- SynRM Sensorless adjustment procedure
  (The number marked on the procedure corresponds to the number of following adjustment explanations)

  I. SynRM Sensorless motor parameters adjustment flowchart

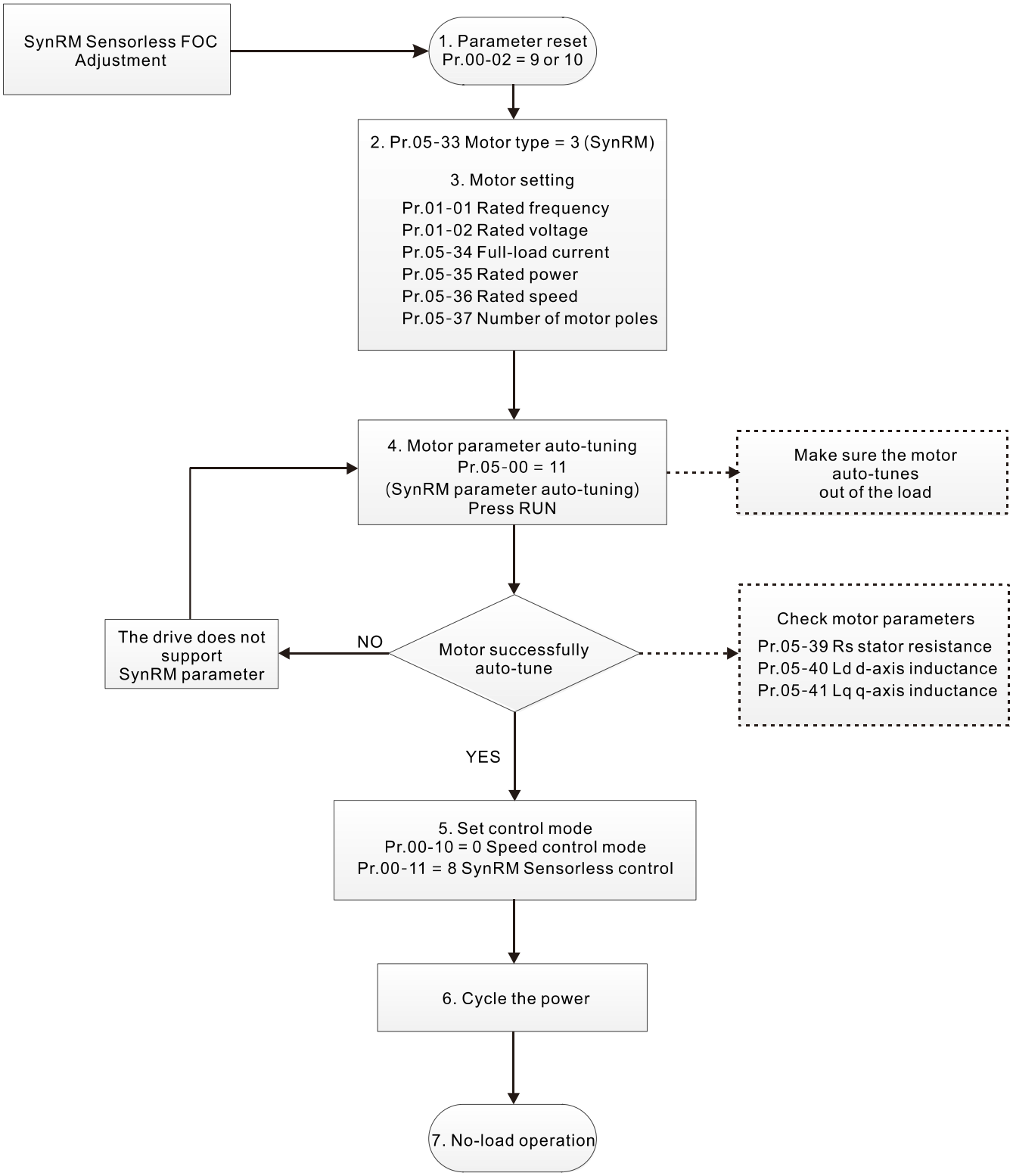

📖 Motor parameters adjustment

1. Parameter reset:

   Reset Pr.00-02 = 9 (50 Hz) or 10 (60 Hz) to the default value

2. Select motor type:

   Pr.05-33 = 3 (SynRM)

3. Motor nameplate parameter setting:

Parameter	Description
Pr.01-01	Rated frequency (Hz)
Pr.01-02	Rated voltage (V_{AC})
Pr.05-34	Rated current (A)
Pr.05-35	Rated power (kW)
Pr.05-36	Rated rotor speed (rpm)
Pr.05-37	Number of motor poles (poles)

4. Motor parameter auto-tuning:

   Set Pr.05-00 = 5 (rolling auto-tuning for PM, with no load) or 13 (static auto-tuning for PM) and press RUN key to finish motor auto-tuning, then you will get the following parameters:

Parameter	Description
Pr.05-39	Stator resistance for a permanent magnet motor (Ω)
Pr.05-40	Permanent magnet motor Ld (mH)
Pr.05-41	Permanent magnet motor Lq (mH)

5. Set control mode:

   Set Pr.00-10 = 0 (Speed control mode)

   Set Pr.00-11 = 8 (SynRM Sensorless)

6. After auto-tuning, cycle the power.

II. SynRM Sensorless for operation with no load

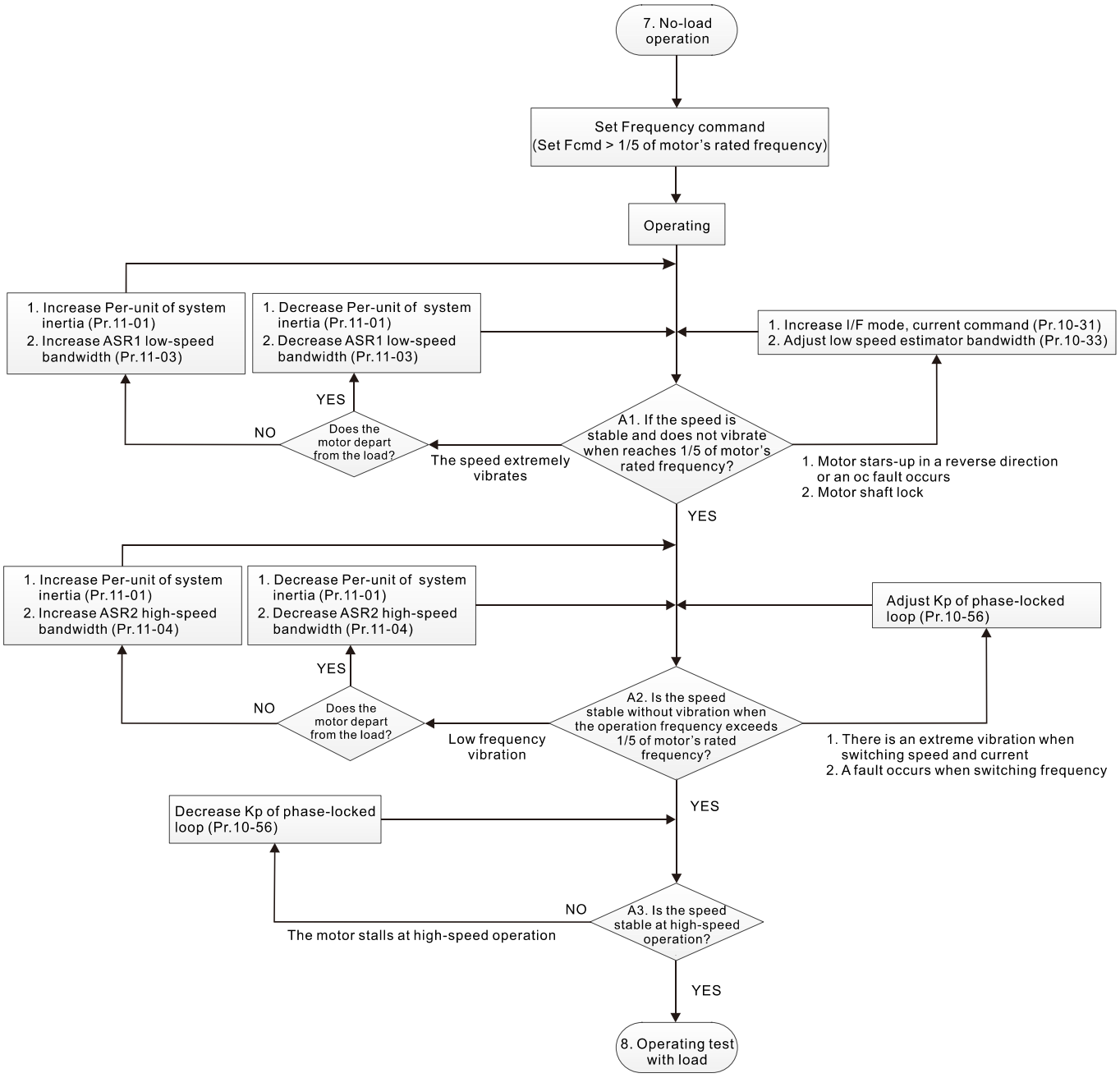

📖 No-load operation adjustment

7. Start the motor without load

A1. Start the motor without load, refer to the following adjustment before the operation frequency reaches 1/5 or motor's rated frequency:

a. If the motor starts in a wrong direction, the starting rotation is not smooth (ocA) or there is motor shaft lock, adjust Pr.10-31 (I/F mode, current command) and Pr.10-33 (PM FOC sensorless low-speed estimator bandwidth).

b. When there is an extreme vibration of the motor speed, adjust Pr.11-01 (per-unit of system inertia) and Pr.11-03 (ASR1 low-speed bandwidth) depending on whether the motor departs from the load.

Setting curve for speed regulator (ASR) and related parameters:

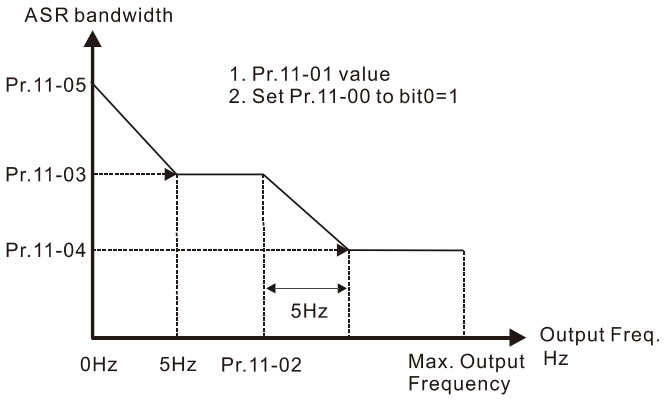

ASR adjustment- auto gain

Parameter	Description	Default
11-00	System control	201h
11-01	Per-unit of system inertia	256
11-02	ASR1 / ASR2 switch frequency (it's recommended that the switch frequency is higher than Pr.10-39)	10 Hz
11-03	ASR1 low-speed bandwidth	5 Hz
11-04	ASR2 high-speed bandwidth	5 Hz
11-05	Zero-speed bandwidth	5 Hz

A2. The operation frequency exceeds the switch frequency for Pr.10-39

a. If there is an extreme vibration of speed and current when switching frequency, or a fault occurs during the switching process, adjust Pr.10-56 (Kp of phase-locked loop).

b. Both of adjustments for Pr.10-55 (magnetic flux linkage estimate high-speed gain) and Pr.10-56 (Kp of phase-locked loop) affect the performance of the speed estimator. Adjust only Pr.10-56 in no-load operation.

A3. Observe whether the motor operates stably when accelerates to the maximum frequency If the motor stalls at the maximum operation speed, decrease Pr.10-56 (Kp phase-locked loop)

III. SynRM Sensorless adjustment for operation starts with load

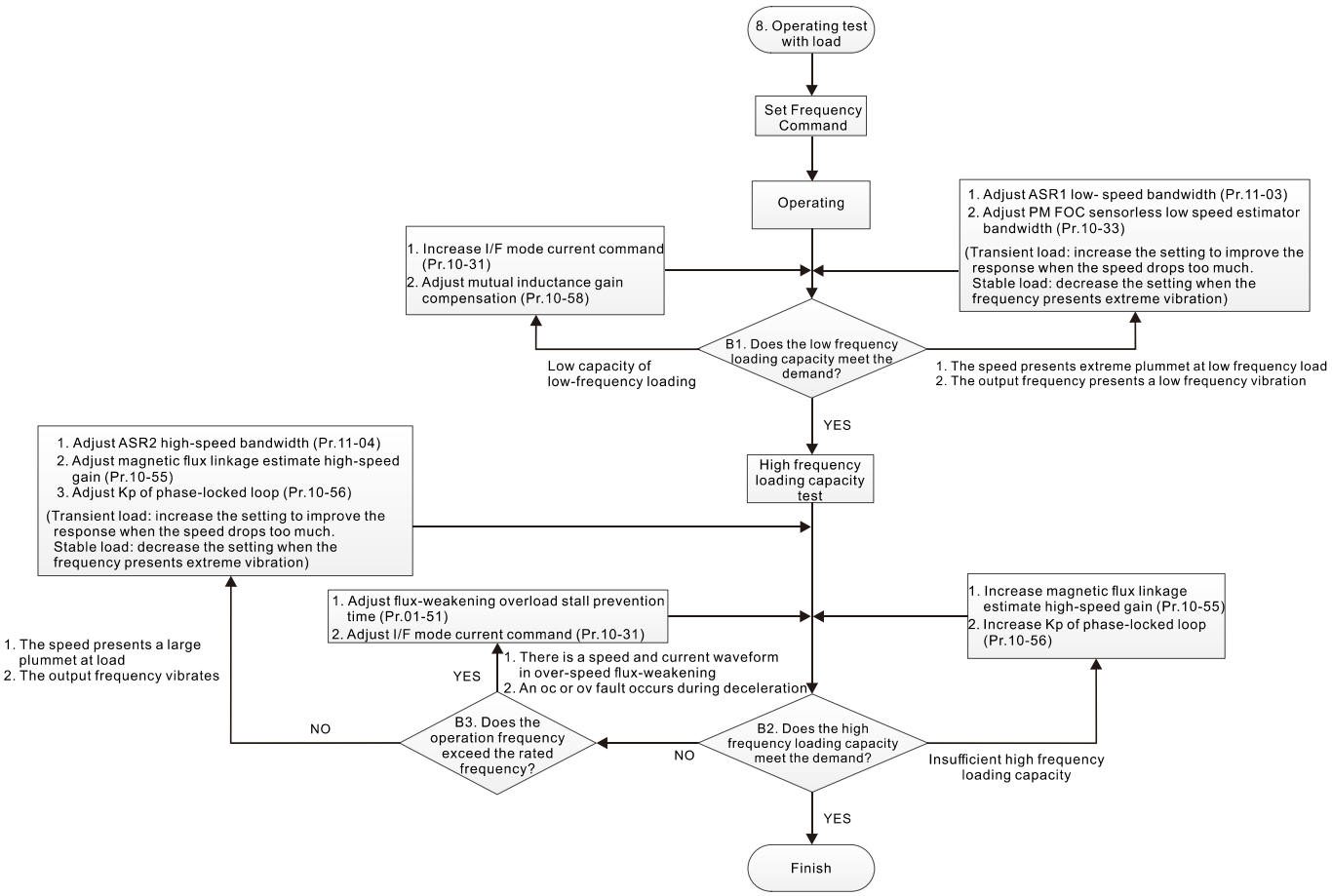

📖 Load operation adjustment

8. Operation test with load

B1. Low-frequency loading capacity test

a. If the low-frequency loading performance is low, increase Pr.10-31 (I/F mode, current command) and Pr.10-58 (mutual inductance compensation gain).

b. If the low-frequency loading speed presents large plummet, or the output frequency presents low-frequency vibration, adjust Pr.11-03 (ASR1 low-speed bandwidth) and Pr.10-33 (PM FOC sensorless speed estimator bandwidth). Increase the setting to improve the response when the speed drops too much at transient load. Decrease the setting if the frequency presents an extreme vibration at stable load.

B2. High frequency loading capacity test

a. If the high frequency loading performance is insufficient, increase Pr.10-55 (Magnetic flux linkage estimate high-speed gain) and Pr.10-56 (Kp of phase-locked loop).

b. If there is large plummet of loading speed, or the output frequency vibrates, adjust Pr.11-04 (ASR2 high-speed bandwidth), Pr.10-55 (magnetic flux linkage estimate high-speed gain) and Pr.10-56 (Kp of phase-locked loop). Increase the setting to improve the response when the speed drops too much at transient load. Decrease the setting if the frequency presents an extreme vibration at stable load.

B3. Operation frequency exceeds the rated frequency

a. When there is a waveform of speed and current in the flux-weakening zone, and an oc or ov fault occurs during the deceleration, adjust Pr.01-51 (flux-weakening overload stall prevention time) and Pr.10-31 (I/F mode current command).

- SynRM Sensorless adjustment parameters

Refer to Section 12-1 Description of Parameter Settings for more details

Parameter	Description	Unit	Default	Settings
00-10	Control mode		0	0–2
00-11	Speed control mode		0	0–8
00-17	Carrier frequency	kHz	4	4–8
01-51	Flux-weakening overload stall prevention time	Sec.	1.00	0.00–600.00
05-00	Motor parameter auto-tuning		0	0–13
05-33	Induction motor (IM) or permanent magnet synchronous AC motor (PM) selection		3	0–3
05-34	Full-load current for a permanent magnet synchronous AC motor / reluctance motor	Amps	NA	NA
05-35	Rated power for a permanent magnet synchronous AC motor / reluctance motor	kW	NA	0–655.35
05-36	Rated speed for a permanent magnet synchronous AC motor / reluctance motor	rpm	NA	0–65535
05-37	Number of poles for a permanent magnet synchronous AC motor / reluctance motor		NA	0–65535
05-38	System inertia for a permanent magnet synchronous AC motor / reluctance motor	Kg-cm^2	NA	0.0~6553.5
05-39	Stator resistance for a permanent magnet synchronous AC motor / reluctance motor	ohm	0.000	0.000–65.535

Parameter	Description	Unit	Default	Settings
05-40	Permanent magnet synchronous AC motor / reluctance motor Ld	mH	0.00	0.00–655.35
05-41	Permanent magnet synchronous AC motor / reluctance motor Lq	mH	0.00	0.00–655.35
07-12	Speed tracking during start-up		0	0–3
10-08	Treatment for encoder / speed observer feedback fault		2	0–2
10-09	Detection time of encoder / speed observer feedback fault	Sec.	1.0	0.0–10.0
10-10	Encoder / speed observer stall level	%	115	0–120
10-11	Detection time of encoder / speed observer stall	sec	0.1	0.0–2.0
10-12	Encoder / speed observer stall action		2	0~2
10-13	Encoder / speed observer slip range	%	50	0–50
10-14	Detection time of encoder / speed observer slip	sec	0.5	0.0–10.0
10-15	Encoder / speed observer stall and slip error action		2	0–2
10-31	I/F mode, current command	%	15	0–150
10-33	PM FOC sensorless speed estimator bandwidth (low speed)		1.00	0.01–3.00
10-34	PM sensorless speed estimator low-pass filter gain		1.00	0.00–10.00
10-35	AMR (Kp) gain		0.40	0.00–3.00
10-36	AMR (Ki) gain		2.00	0.00–3.00
10-39	Frequency to switch from I/F mode to PM sensorless mode	Hz	10.00	0.0–599.00
10-51	Injection frequency	Hz	400	0–1200
10-52	Injection magnitude	%	30	10~50
10-55	Magnetic flux linkage estimate high-speed gain		1.0	0.1–3.0
10-56	Kp of phase-locked loop	Hz	10	5–50
10-58	Mutual inductance gain compensation		1.00	0.00–655.35
11-00	System control		513	0–65535
11-01	Per-unit of system inertia	pu	256	1–65535
11-02	ASR1 / ASR2 switch frequency	Hz	10.00	5.00–599.00
11-03	ASR1 low-speed bandwidth	Hz	5	1–30
11-04	ASR2 high-speed bandwidth	Hz	5	1–30
11-05	Zero-speed bandwidth	Hz	5	1–30
11-17	Forward motor torque limit Quadrant I	%	200	0–500
11-18	Forward regenerative torque limit Quadrant II	%	200	0–500
11-19	Reverse motor torque limit Quadrant III	%	200	0–500
11-20	Reverse regenerative torque limit Quadrant IV	%	200	0–500
11-35	Torque command filter time	Sec.	0.050	0.000–1.000

[This page intentionally left blank]

Chapter 13 Warning Codes

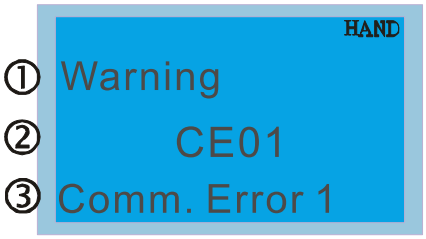

① Display error signal
② Abbreviate error code
③ Display error description

ID No.	Display on LCD Keypad	Warning Name	Description
1	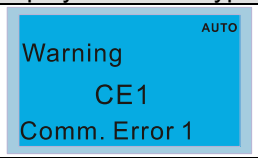	Communication error 1 (CE1)	RS-485 Modbus illegal function code
Action and Reset			
Action level	When the function code is not 03, 06, 10 and 63		
Action time	Immediately act		
Warning setting parameter	N/A		
Reset method	“Warning” occurs when Pr.09-02=0 and the motor drive keeps running. The drive resets automatically when receiving the correct function code.		
Reset condition	Immediately reset		
Record	N/A		
Cause	Corrective Actions		
Incorrect communication command from upper unit	Check if the communication command is correct.		
Malfunction caused by interference	Verify the wiring and grounding of the communication circuit. It is recommended to separate the communication circuit from the main circuit, or wire in 90 degree for effective anti-interference performance.		
Different communication setting from the upper unit	Check if the setting for Pr.09-02 is the same as the setting for the upper unit.		
Disconnection or bad connection of the cable	Check the cable and replace it if necessary.		

Display on LCD Keypad	Warning Name	Description
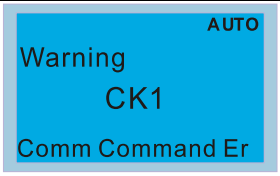	Communication command error 1 (CK1)	Keypad communication data, illegal function code (Keypad auto-detect this error and display it.)
Action and Reset		
Action level	When the function code is not 03, 06, 10 and 63	
Action time	Immediately act	
Warning setting parameter	N/A	
Reset method	Remove the keypad and then reconnect it to the motor drive.	
Reset condition	Immediately reset	
Record	N/A	
Cause	Corrective Actions	
Incorrect communication command from keypad	Keypad and the motor drive don’t communicate properly. It is recommended to remove the keypad and then reconnect it to the motor drive.	
Malfunction caused by interference	Verify the wiring and grounding of the communication circuit. It is recommended to separate the communication circuit from the main circuit, or wire in 90 degree for effective anti-interference performance.	
Different communication setting from keypad	Check if the Baud rate = 19200 bps. Format = RTU8, N, 2.	
Disconnection or bad connection of the cable	Check the cable and replace it if necessary.	

ID No.	Display on LCD Keypad	Warning Name	Description
2	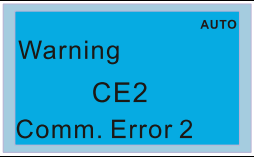	Communication error 2 (CE2)	RS-485 Modbus illegal data address
Action and Reset			
Action level	When the input data address is incorrect		
Action time	Immediately act		
Warning setting parameter	N/A		
Reset method	“Warning” occurs when Pr.09-02=0 and the motor drive keeps running. The drive resets automatically when receiving the correct data address.		
Reset condition	Immediately reset		
Record	N/A		
Cause	Corrective Actions		
Incorrect communication command from upper unit	Check if the communication command is correct.		
Malfunction caused by interference	Verify the wiring and grounding of the communication circuit. It is recommended to separate the communication circuit from the main circuit, or wire in 90 degree for effective anti-interference performance.		
Different communication setting from the upper unit	Check if the setting for Pr.09-02 is the same as the setting for the upper unit.		
Disconnection or bad connection of the cable	Check the cable and replace it if necessary.		

.Display on LCD Keypad	Warning Name	Description
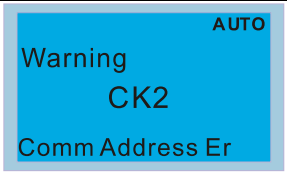	Communication address error (CK2)	Keypad communication data, illegal data address (Keypad auto-detect this error and display it.)
Action and Reset		
Action level	When the input data address is incorrect	
Action time	Immediately act	
Warning setting parameter	N/A	
Reset method	Remove the keypad and then reconnect it to the motor drive.	
Reset condition	Immediately reset	
Record	N/A	
Cause	Corrective Actions	
Incorrect communication command from keypad	Keypad and the motor drive don’t communicate properly. It is recommended to remove the keypad and then reconnect it to the motor drive.	
Malfunction caused by interference	Verify the wiring and grounding of the communication circuit. It is recommended to separate the communication circuit from the main circuit, or wire in 90 degree for effective anti-interference performance.	
Different communication setting from keypad	Check if the Baud rate = 19200 bps. Format = RTU8, N, 2.	
Disconnection or bad connection of the cable	Check the cable and replace it if necessary.	

ID No.	Display on LCD Keypad	Warning Name	Description
3	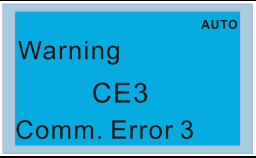	Communication error 3 (CE3)	RS-485 Modbus illegal data value
Action and Reset			
Action level	When the length of communication data is too long		
Action time	Immediately act		
Warning setting parameter	N/A		
Reset method	“Warning” occurs when Pr.09-02=0 and the motor drive keeps running. The drive resets automatically when receiving the correct communication data value.		
Reset condition	Immediately reset		
Record	N/A		
Cause	Corrective Actions		
Incorrect communication command from upper unit	Check if the communication command is correct.		
Malfunction caused by interference	Verify the wiring and grounding of the communication circuit. It is recommended to separate the communication circuit from the main circuit, or wire in 90 degree for effective anti-interference performance.		
Different communication setting from the upper unit	Check if the setting for Pr.09-02 is the same as the setting for the upper unit.		
Disconnection or bad connection of the cable	Check the cable and replace it if necessary.		

.Display on LCD Keypad	Warning Name	Description
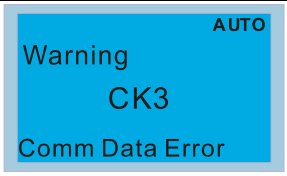	Communication data error (CK3)	Keypad communication data, illegal data value (Keypad auto-detect this error and display it.)
Action and Reset		
Action level	When the length of communication data is too long	
Action time	Immediately act	
Warning setting parameter	N/A	
Reset method	Remove the keypad and then reconnect it to the motor drive.	
Reset condition	Immediately reset	
Record	N/A	
Cause	Corrective Actions	
Incorrect communication command from keypad	Keypad and the motor drive don’t communicate properly. It is recommended to remove the keypad and then reconnect it to the motor drive.	
Malfunction caused by interference	Verify the wiring and grounding of the communication circuit. It is recommended to separate the communication circuit from the main circuit, or wire in 90 degree for effective anti-interference performance.	
Different communication setting from keypad	Check if the Baud rate = 19200 bps. Format = RTU8, N, 2.	
Disconnection or bad connection of the cable	Check the cable and replace it if necessary.	

ID No.	Display on LCD Keypad	Warning Name	Description
4	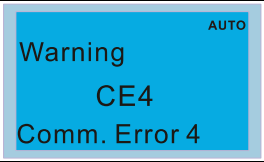	Communication error 4 (CE4)	RS-485 Modbus data is written to read-only address
Action and Reset			
Action level	When the data is written to read-only address		
Action time	Immediately act		
Warning setting parameter	N/A		
Reset method	“Warning” occurs when Pr.09-02=0 and the motor drive keeps running. The drive resets automatically when receiving the correct written address of communication data.		
Reset condition	Immediately reset		
Record	N/A		
Cause	Corrective Actions		
Incorrect communication command from upper unit	Check if the communication command is correct.		
Malfunction caused by interference	Verify the wiring and grounding of the communication circuit. It is recommended to separate the communication circuit from the main circuit, or wire in 90 degree for effective anti-interference performance.		
Different communication setting from the upper unit	Check if the setting for Pr.09-02 is the same as the setting for the upper unit.		
Disconnection or bad connection of the cable	Check the cable and replace it if is necessary.		

Display on LCD Keypad	Warning Name	Description
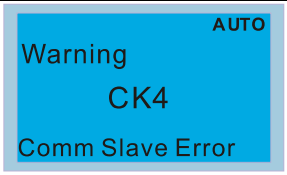	Communication slave error (CK4)	Keypad communication data is written to read-only address. (Keypad auto-detect this error and display it.)
Action and Reset		
Action level	When the data is written to read-only address	
Action time	Immediately act	
Warning setting parameter	N/A	
Reset method	Remove the keypad and then reconnect it to the motor drive.	
Reset condition	Immediately reset	
Record	N/A	
Cause	Corrective Actions	
Incorrect communication command from keypad	Keypad and the motor drive don’t communicate properly. It is recommended to remove the keypad and then reconnect it to the motor drive. If the problem persists after reconnecting the keypad, pay attention to the motor drive status. For example: Motor drive might reset to default setting during operation or while enabling PLC function.	
Malfunction caused by interference	Verify the wiring and grounding of the communication circuit. It is recommended to separate the communication circuit from the main circuit, or wire in 90 degree for effective anti-interference performance.	
Different communication setting from keypad	Check if the Baud rate = 19200 bps. Format = RTU8, N, 2.	
Disconnection or bad connection of the cable	Check the cable and replace it if is necessary.	

ID No.	Display on LCD Keypad	Warning Name	Description
5	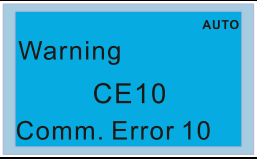	Communication error 10 (CE10)	RS-485 Modbus transmission time-out
Action and Reset			
Action level	When the communication time exceeds the detection time of Pr.09-03 communication time-out		
Action time	Setting for Pr.09-03		
Warning setting parameter	N/A		
Reset method	“Warning” occurs when Pr.09-02=0 and the motor drive keeps running. The drive resets automatically when receiving the next communication packet.		
Reset condition	Immediately reset		
Record	N/A		
Cause	Corrective Actions		
The upper unit does not transmit the communication command within Pr. 09-03 setting time	Check if the upper unit transmits the communication command within the setting time for Pr.09-03.		
Malfunction caused by interference	Verify the wiring and grounding of the communication circuit. It is recommended to separate the communication circuit from the main circuit, or wire in 90 degree for effective anti-interference performance.		
Different communication setting from the upper unit	Check if the setting for Pr.09-02 is the same as the setting for the upper unit.		
Disconnection or bad connection of the cable	Check the cable and replace it if necessary.		

Display on LCD Keypad	Warning Name	Description
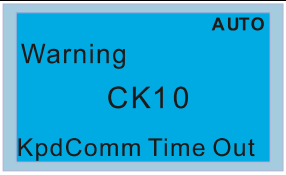	Keypad communication time out (CK10)	Keypad communication data, transmission time-out (Keypad auto-detect this error and display it.)
Action and Reset		
Action level	When the communication time exceeds the detection time of Pr.09-03 communication time-out	
Action time	Setting for Pr.09-03	
Warning setting parameter	N/A	
Reset method	Remove the keypad and then reconnect it to the motor drive.	
Reset condition	Immediately reset	
Record	N/A	
Cause	Corrective Actions	
Incorrect communication command from keypad	Keypad and the motor drive don’t communicate properly. It is recommended to remove the keypad and then reconnect it to the motor drive.	
Malfunction caused by interference	Verify the wiring and grounding of the communication circuit. It is recommended to separate the communication circuit from the main circuit, or wire in 90 degree for effective anti-interference performance.	
Different communication setting from keypad	Check if the Baud rate = 19200 bps. Format = RTU8, N, 2.	
Disconnection or bad connection of the cable	Check the cable and replace it if necessary.	

ID No.	Display on LCD Keypad	Warning Name	Description
7	AUTO Warning SE1 Save Error 1	Save error 1 (SE1)	Keypad COPY error 1: Keypad copy time-out
Action and Reset			
Action level		“SE1” warning occurs when the keypad does not transmit the COPY command to the drive, and does not transmit any data to the drive again in 10 ms at the time you copy the parameters to the drive.	
Action time		10 ms	
Warning setting parameter		N/A	
Reset method		Manual reset	
Reset condition		Immediately reset	
Record		N/A	
Cause		Corrective Actions	
Communication connection error		SE1: The causes of error are mostly communication problems between the keypad and control board. Potential causes include communication signal interference and the unacceptable communication command to the Slave. Check if the error occurs randomly, or only occurs when copying certain parameters (the error displays on the upper right corner of the copy page). If you cannot clear the error, please contact Delta.	
Keypad error			
Control board error			

ID No.	Display on LCD Keypad	Warning Name	Description
8	AUTO Warning SE2 Save Error 2	Save error 2 (SE2)	Keypad COPY error 2: parameter writing error
Action and Reset			
Action level		“SE2” warning occurs when writing the parameters incorrectly at the time you copy parameters to the drive. For example, you copy the new firmware version with added parameters to the drive with old firmware version.	
Action time		N/A	
Warning setting parameter		N/A	
Reset method		Manual reset	
Reset condition		Immediately reset	
Record		N/A	
Cause		Corrective Actions	
Add new parameters to the new firmware version.		SE2: In this stage, the copied data has been transmitted to the Slave. The Slave compares and processes the copied data, and then saves the data to the Data ROM. During the process, the data error (should be attribution error) may occur, or the data cannot be saved to EEPROM. At this time, the warning occurs. It is suggested to check the status of Data ROM and remove the error causes first. If you cannot clear the error, please contact Delta.	
Malfunction caused by interference		Verify the wiring and grounding of the main circuit, control circuit and the encoder for effective anti-interference performance.	

ID No.	Display on LCD Keypad	Warning Name	Description
9	AUTO Warning oH1 Over heat 1 warn	IGBT over-heating warning (oH1)	The AC motor drive detects over-heating of IGBT, and over the protection level of oH1 warning. (When Pr.06-15 is higher than the IGBT over-heating level, the drive shows oH1 error without displaying oH1 warning.)

Action and Reset	
Action level	Pr.06-15
Action time	"oH1" warning occurs when IGBT temperature is higher than Pr.06-15 setting value.
Warning setting parameter	N/A
Reset method	Auto-reset
Reset condition	The drive auto-resets when IGBT temperature is lower than oH1 warning level minus (–) 5°C
Record	N/A
Cause	**Corrective Actions**
Check if the ambient temperature or temperature inside the cabinet is too high, or if there is obstruction in the ventilation hole of the control cabinet.	1. Check the ambient temperature. 2. Regularly inspect the ventilation hole of the control cabinet. 3. Change the installed place if there are heating objects, such as braking resistors, in the surroundings. 4. Install/ add cooling fan or air conditioner to lower the temperature inside the cabinet.
Check if there is any obstruction on the heat sink or if the fan is running	Remove the obstruction or replace the cooling fan.
Insufficient ventilation space	Increase ventilation space of the drive.
Check if the drive matches the corresponded loading	1. Decrease loading. 2. Decrease the carrier. 3. Replace with a drive with larger capacity.
The drive has run 100% or more of the rated output for a long time	Replace with a drive with larger capacity.

ID No.	Display on LCD Keypad	Warning Name	Description
10	AUTO Warning oH2 Over heat 2 warn	Over-heat key components (oH2)	The drive has detected the key components are over heat

Action and Reset	
Action level	oH2 error level minus (–) 5°C
Action time	The oH2 warning occurs when the temperature sensor of key components detects the temperature is higher than oH2 warning level
Warning setting parameter	N/A
Reset method	Auto-reset
Reset condition	The drive auto-resets when the temperature sensor of key components detects the temperature is lower than oH2 error level minus (–) 10°C
Record	N/A
Cause	**Corrective Actions**
Check if the ambient temperature or temperature inside the cabinet is too high, or if there is obstruction in the ventilation hole of the control cabinet.	1. Check the ambient temperature. 2. Regularly inspect the ventilation hole of the control cabinet. 3. Change the installed place if there are heating objects, such as braking resistors, in the surroundings. 4. Install/ add cooling fan or air conditioner to lower the temperature inside the cabinet.
Check if there is any obstruction on the heat sink or if the fan is running	Remove the obstruction or replace the cooling fan.
Insufficient ventilation space	Increase ventilation space of the drive.
Check if the drive matches the corresponded loading	1. Decrease loading. 2. Decrease the carrier. 3. Replace with a drive with larger capacity.

The drive has run 100% or more of the rated output for a long time	Replace with a drive with larger capacity.
Unstable power	Install reactor(s).
The load changes frequently	Reduce the changes of the load.

oH1/ oH2 warning level

<table>
<tr><th>Model</th><th>oH1</th><th>oH2</th><th>oH warning
oH1 warning = (Pr.06-15)</th></tr>
<tr><td>VFD007C23A-21</td><td rowspan="18">110</td><td rowspan="3">95</td><td rowspan="18">oH1 Warning = oH1 – 5
oH2 Warning = oH2 – 5</td></tr>
<tr><td>VFD015C23A-21</td></tr>
<tr><td>VFD022C23A-21</td></tr>
<tr><td>VFD037C23A-21</td><td>100</td></tr>
<tr><td>VFD055C23A-21</td><td rowspan="3">80</td></tr>
<tr><td>VFD075C23A-21</td></tr>
<tr><td>VFD110C23A-21</td></tr>
<tr><td>VFD150C23A-21</td><td rowspan="3">75</td></tr>
<tr><td>VFD185C23A-21</td></tr>
<tr><td>VFD220C23A-21</td></tr>
<tr><td>VFD300C23A-00 / VFD300C23A-21</td><td rowspan="6">65</td></tr>
<tr><td>VFD370C23A-00 / VFD370C23A-21</td></tr>
<tr><td>VFD450C23A-00 / VFD450C23A-21</td></tr>
<tr><td>VFD550C23A-00 / VFD550C23A-21</td></tr>
<tr><td>VFD750C23A-00 / VFD750C23A-21</td></tr>
<tr><td>VFD900C23A-00 / VFD900C23A-21</td></tr>
<tr><td colspan="4"></td></tr>
<tr><td>VFD007C43A-21 / VFD007C4EA-21</td><td rowspan="3">110</td><td rowspan="2">95</td><td rowspan="4">oH1 Warning = oH1 – 5
oH2 Warning = oH2 – 5</td></tr>
<tr><td>VFD015C43A-21 / VFD015C4EA-21</td></tr>
<tr><td>VFD022C43A-21 / VFD022C4EA-21</td><td>100</td></tr>
<tr><td>VFD037C43A-21 / VFD037C4EA-21</td><td rowspan="24">110</td><td>105</td></tr>
<tr><td>VFD040C43A-21 / VFD040C4EA-21</td><td rowspan="2">100</td><td rowspan="24">oH1 Warning = oH1 – 5
oH2 Warning = oH2 – 5</td></tr>
<tr><td>VFD055C43A-21 / VFD055C4EA-21</td></tr>
<tr><td>VFD075C43A-21 / VFD075C4EA-21</td><td rowspan="3">80</td></tr>
<tr><td>VFD110C43A-21 / VFD110C4EA-21</td></tr>
<tr><td>VFD150C43A-21 / VFD150C4EA-21</td></tr>
<tr><td>VFD185C43A-21 / VFD185C4EA-21</td><td rowspan="3">85</td></tr>
<tr><td>VFD220C43A-21 / VFD220C4EA-21</td></tr>
<tr><td>VFD300C43A-21 / VFD300C4EA-21</td></tr>
<tr><td>VFD370C43S-00 / VFD370C43S-21</td><td rowspan="7">65</td></tr>
<tr><td>VFD450C43S-00 / VFD450C43S-21</td></tr>
<tr><td>VFD550C43A-00 / VFD550C43A-21</td></tr>
<tr><td>VFD750C43A-00 / VFD750C43A-21</td></tr>
<tr><td>VFD900C43A-00 / VFD900C43A-21</td></tr>
<tr><td>VFD1100C43A-00 / VFD1100C43A-21</td></tr>
<tr><td>VFD1320C43A-00 / VFD1320C43A-21</td></tr>
<tr><td>VFD1600C43A-00 / VFD1600C43A-21</td></tr>
<tr><td>VFD1850C43A-00 / VFD1850C43A-21</td><td rowspan="6">70</td></tr>
<tr><td>VFD2200C43A-00 / VFD2200C43A-21</td></tr>
<tr><td>VFD2800C43A-00 / VFD2800C43C-21</td></tr>
<tr><td>VFD3150C43A-00 / VFD3150C43C-21</td></tr>
<tr><td>VFD3550C43A-00 / VFD3550C43C-21</td></tr>
<tr><td>VFD4500C43A-00 / VFD4500C43C-21</td></tr>
<tr><td>VFD5000C43A-00 / VFD5000C43C-21</td><td colspan="3">Contact Delta</td></tr>
<tr><td>VFD5600C43A-00 / VFD5600C43C-21</td><td colspan="3">Contact Delta</td></tr>
<tr><td colspan="4"></td></tr>
<tr><td>VFD015C53A-21</td><td>100</td><td rowspan="3">85</td><td rowspan="6">oH1 Warning = oH1 – 5
oH2 Warning = oH2 – 5</td></tr>
<tr><td>VFD022C53A-21</td><td>105</td></tr>
<tr><td>VFD037C53A-21</td><td rowspan="4">100</td></tr>
<tr><td>VFD055C53A-21</td><td rowspan="3">70</td></tr>
<tr><td>VFD075C53A-21</td></tr>
<tr><td>VFD110C53A-21</td></tr>
</table>

Model	oH1	oH2	oH warning oH1 warning = (Pr.06-15)
VFD150C53A-21			
VFD185C63B-21	90	85	oH1 Warning = oH1 – 5 oH2 Warning = oH2 – 5
VFD220C63B-21			
VFD300C63B-21			
VFD370C63B-21			
VFD450C63B-00 / VFD450C63B-21	100	65	
VFD550C63B-00 / VFD550C63B-21			
VFD750C63B-00 / VFD750C63B-21	110		
VFD900C63B-00 / VFD900C63B-21			
VFD1100C63B-00 / VFD1100C63B-21			
VFD1320C63B-00 / VFD1320C63B-21			
VFD1600C63B-00 / VFD1600C63B-21			
VFD2000C63B-00 / VFD2000C63B-21			
VFD2500C63B-00 / VFD2500C63B-21		70	
VFD3150C63B-00 / VFD3150C63B-21			
VFD4000C63B-00 / VFD4000C63B-21			
VFD4500C63B-00 / VFD4500C63B-21			
VFD5600C63B-00 / VFD5600C63B-21			
VFD6300C63B-00 / VFD6300C63B-21			

ID No.	Display on LCD Keypad	Warning Name	Description
11	AUTO Warning PID PID FBK Error	PID feedback error (PID)	PID feedback loss (warning for analog feedback signal; works only when PID enables)

Action and Reset		
Action level	When the analog input is lower than 4mA (only detects analog input of 4–20mA)	
Action time	Pr.08-08	
Warning setting parameter	Pr.08-09 0: Warn and keep operation 1: Fault and ramp to stop 2: Fault and coast to stop 3: Warn and operate at last frequency	
Reset method	Auto	“Warning” occurs when Pr.08-09=0 or 3. The “Warning” automatically clears when the feedback signal is larger than 4mA.
	Manual	“Error” occurs when Pr.08-09=1 or 2. You must reset manually.
Reset condition	Immediately reset	
Record	Records when Pr.08-09=1 or 2 (“Error”). Does not record when Pr.08-09=3 (“Warning”).	
Cause	Corrective Actions	
Loose or broken PID feedback wiring	Tighten the terminals again. Replace with a new cable.	
Feedback device malfunction	Replace with a new feedback device.	
Hardware error	If the PID error still occurs after checking all the wiring, return to the factory for repair.	

ID No.	Display on LCD Keypad	Warning Name	Description
12	AUTO Warning ANL Analog loss	ACI analog signal loss (AnL)	Analog input current loss (including all analog 4–20mA signals)
Action and Reset			
Action level	When the analog input is lower than 4mA (only detects analog input 4–20mA)		
Action time	Immediately act		
Warning setting parameter	Pr.03-19 0: Disable 1: Continue operation at the last frequency (warning, keypad displays ANL) 2: Decelerate to 0Hz (warning, keypad displays ANL) 3: Stop immediately and display ACE		
Reset method	Auto	“Warning” occurs when Pr.03-19=1 or 2. The “Warning automatically clears when the analog input signal is larger than 4mA.	
	Manual	“Error” occurs when Pr.03-19=3. You must reset manually.	
Reset condition	Immediately reset		
Record	Does not record when Pr.03-19=1 or 2 (“Warning”).		
Cause	Corrective Actions		
Loose or broken ACI wiring	Tighten the terminals again. Replace with a new cable.		
External device error	Replace new device.		
Hardware error	If the AnL error still occurs after checking all the wiring, return to the factory for repair.		

ID No.	Display on LCD Keypad	Warning Name	Description
13	AUTO Warning uC Under Current	Under current (uC)	Low current
Action and Reset			
Action level	Pr.06-71		
Action time	Pr.06-72		
Warning setting parameter	Pr.06-73 0: No function 1: Fault and coast to stop 2: Fault and ramp to stop by 2nd deceleration time 3: Warn and operation continue		
Reset method	Auto	“Warning” occurs when Pr.06-73=3. The “Warning” automatically clears when the output current is > (Pr.06-71+0.1A).	
	Manual	“Error” occurs when Pr.06-73=1 and 2. You must reset manually.	
Reset condition	Immediately reset		
Record	Does not record when Pr.06-73=3 and uC displays “Warning”.		
Cause	Corrective Actions		
Broken motor cable	Exclude the connection issue of the motor and its load.		
Improper setting for the low current protection	Set the proper settings for Pr.06-71, Pr.06-72 and Pr.06-73.		
Low load	Check the loading status. Make sure the loading matches the motor capacity.		

ID No.	Display on LCD Keypad	Warning Name	Description
15	AUTO Warning PGFB PG FBK Warn	PG feedback warning (PGFb)	PG feedback error warning
Action and Reset			
Action level	Motor runs in a reverse direction to the direction of frequency command		
Action time	Pr.10-09		
Warning setting parameter	Pr.10-08=0 0: Warn and operation continue 1: Fault and ramp to stop 2: Fault and coast to stop		
Reset method	Auto-reset		
Reset condition	“Warning” automatically clears when the drive stops		
Record	N/A		
Cause	Corrective Actions		
Incorrect encoder parameter setting	Reset encoder parameter (Pr.10-02).		
Check if the connection of encoder is loss	Wiring again.		
Broken PG card or PG encoder	Replace with a new PG card or encoder.		
Malfunction caused by interference	Verify wiring of the control circuit, and wiring/grounding of the main circuit to prevent interference.		

ID No.	Display on LCD Keypad	Warning Name	Description
17	HAND Warning oSPd Over Speed Warn	Over speed warning (oSPd)	Over speed warning
Action and Reset			
Action level	The encoder feedback speed > Pr.10-10		
Action time	Pr.10-11		
Warning setting parameter	Pr.10-12=0 0: Warn and keep operation		
Reset method	“Warning” automatically clears when the drive stops		
Reset condition	“Warning” automatically clears when the drive stops		
Record	N/A		
Cause	Corrective Actions		
Improper setting for Pr.10-25 FOC bandwidth of speed observer	Decrease setting value for Pr.10-25.		
Improper bandwidth setting for ASR speed controller	Increase the bandwidth setting for ASR speed controller.		
Incorrect motor parameter setting	Reset motor parameter and run parameter tuning.		
Malfunction caused by interference	Verify wiring of the control circuit, and wiring/grounding of the main circuit to prevent interference.		

ID No.	Display on LCD Keypad	Warning Name	Description
18	AUTO Warning dAvE Deviation Warn	Deviation Warning (dAvE)	Over speed deviation warning
Action and Reset			
Action level		Pr.10-13	
Action time		Pr.10-14	
Warning setting parameter		Pr.10-15=0 0: Warn and keep operation	
Reset method		“Warning” automatically clears when the drive stops	
Reset condition		After the drive stops	
Record		N/A	
Cause		Corrective Actions	
Improper parameter setting for the slip error		Reset proper value for Pr.10-13 and Pr.10-14.	
Improper setting for ASR parameter and acceleration/ deceleration		Reset ASR parameters. Set proper accel./ decel. time.	
Accel./ Decel. time is too short		Reset proper accel./ decel. time.	
Motor locked		Remove the causes of motor locked.	
Mechanical brake is not released		Check the active timing of the system.	
Incorrect parameter setting of torque limit (Pr.06-12, Pr.11-17–20)		Adjust to proper setting value.	
Malfunction caused by interference		Verify wiring of the control circuit, and wiring/grounding of the main circuit to prevent interference.	

ID No.	Display on LCD Keypad	Warning Name	Description
19	AUTO Warning PHL Phase Loss	Phase loss (PHL)	Input phase loss warning
Action and Reset			
Action level		One of the phases outputs less than Pr.06-47	
Action time		Pr.06-46	
Warning setting parameter		Pr.06-45=0 0: Warn and keep operation	
Reset method		“Warning” automatically clears when the drive stops	
Reset condition		After the drive stops	
Record		N/A	
Cause		Corrective Actions	
Phase loss of the input power		Verify wiring of the main circuit.	
Single phase power input on a three-phase model		Use the model with voltage that matches the power.	
The power voltage has changed		If the power of main circuit works well, check if the MC of the main circuit is broken. Cycle the power after verifying the power is normal. If PHL still occurs, return to the factory for repair.	
Loose wiring terminal of input power		Tighten the terminal screws with the torque listed in the user manual.	
Check if the input cable of 3-phase power is broken		Make sure the wiring is correct. Replace the broken part of the cable.	
The voltage of input power has changed		Check setting for Pr.06-50 (Time for Input Phase Loss Detection) and Pr.06-52 (Ripple of Input Phase Loss).	
Unbalance three-phase of the input power		Check the status of 3-phase power.	

ID No.	Display on LCD Keypad	Warning Name	Description
20	AUTO Warning ot1 Over Torque 1	Over-torque 1 (ot1)	Over-torque 1 warning

Action and Reset	
Action level	Pr.06-07
Action time	Pr.06-08
Warning setting parameter	Pr.06-06=1 or 3 0: No function 1: Continue operation after over-torque detection during constant speed operation 2: Stop after over-torque detection during constant speed operation 3: Continue operation after over-torque detection during RUN 4: Stop after over-torque detection during RUN
Reset method	When input current < (Pr.06-07 – 5%), the Ot1 warning automatically clears
Reset condition	When input current < (Pr.06-07 – 5%), the Ot1 warning automatically clears
Record	N/A

Cause	Corrective Actions
Incorrect parameter setting	Configure the settings for Pr.06-07 and Pr.06-08 again.
Mechanical error (e.g. mechanical lock due to over-torque)	Remove the causes of malfunction.
The load is too large	Decrease the loading. Replace with a motor with larger capacity.
Accel./ Decel. time and working cycle is too short	Increase the setting values for Pr.01-12–01-19 (accel./ decel. time)
V/F voltage is too high	Adjust the settings for Pr.01-01–01-08 (V/F curve), especially the setting value for the mid-point voltage (if the mid-point voltage is set too small, the load capacity decreases at low-speed).
The motor capacity is too small	Replace with a motor with larger capacity.
Over-load during low-speed operation	Decrease the loading during low-speed operation. Increase the motor capacity.
The torque compensation is too large	Adjust the torque compensation value (Pr.07-26 torque compensation gain) until the output current decreases and the motor does not stall.
Improper parameter settings for the speed tracking function (including restart after momentary power loss and restart after fault)	Correct the parameter settings for speed tracking. Start the speed tracking function. Adjust the maximum current for Pr.07-09 speed tracking.

ID No.	Display on LCD Keypad	Warning Name	Description
21	AUTO Warning ot2 Over Torque 2	Over-torque (ot2)	Over-torque 2 warning
Action and Reset			
Action level		Pr.06-10	
Action time		Pr.06-11	
Warning setting parameter		Pr.06-09=1 or 3 0: No function 1: Continue operation after over-torque detection during constant speed operation 2: Stop after over-torque detection during constant speed operation 3: Continue operation after over-torque detection during RUN 4: Stop after over-torque detection during RUN	
Reset method		When output current < (Pr.06-10 – 5%), the Ot2 warning automatically clears	
Reset condition		When output current < (Pr.06-10 – 5%), the Ot2 warning automatically clears	
Record		N/A	
Cause		Corrective Actions	
Incorrect parameter setting		Configure the settings for Pr.06-10 and Pr.06-11	
Mechanical error (e.g. mechanical lock due to over-torque)		Remove the causes of malfunction.	
The load is too large		Decrease the loading. Replace with a motor with larger capacity.	
Accel./ Decel. time and working cycle is too short		Increase the setting values for Pr.01-12–01-19 (accel./ decel. time)	
V/F voltage is too high		Adjust the V/F curve (Motor 2, Pr.01-35–01-42), especially the setting value for the mid-point voltage (if the mid-point voltage is set too small, the load capacity decreases at low-speed).	
The motor capacity is too small		Replace with a motor with larger capacity.	
Over-load during low-speed operation		Decrease the loading during low-speed operation. Increase the motor capacity.	
The torque compensation is too large		Adjust the torque compensation value (Pr.07-26 torque compensation gain) until the output current decreases and the motor does not stall.	
Improper parameter settings for the speed tracking function (including restart after momentary power loss and restart after fault)		Correct the parameter settings for speed tracking. Start speed tracking function. Adjust the maximum current for Pr.07-09 speed tracking.	

ID No.	Display on LCD Keypad	Warning Name	Description
22_1	AUTO Warning oH3 Motor Over Heat	Motor over-heating (oH3) PTC	Motor over-heating warning. The AC motor drive detects the temperature inside the motor is too high

Action and Reset	
Action level	Pr.03-00=6 (PTC), PTC input level > Pr.06-30 (default=50%)
Action time	Immediately act
Warning setting parameter	Error treatment: Pr.06-29 0: Warn and keep operating 1: Fault and ramp to stop 2: Fault and coast to stop 3: No warning When Pr.06-29=0 and when the temperature is ≤ Pr.06-30 level, the oH3 warning automatically clears. When Pr.06-29=0 (“Warning”), it automatically resets.
Reset method	When Pr.06-29=0, oH3 displays “Warning”. When the temperature is ≤ Pr.06-30 level, the oH3 warning automatically clears.
Reset condition	When the temperature is ≤ Pr.06-30 level, the oH3 warning automatically clears.
Record	N/A

Cause	Corrective Actions
Motor locked	Clear the motor lock status.
The load is too large	Decrease the loading. Replace with a motor with larger capacity.
Ambien temperature is too high	Change the installed place if there are heating devices in the surroundings. Install/ add cooling fan or air conditioner to lower the ambient temperature.
Motor cooling system error	Check the cooling system to make it work normally.
Motor fan error	Replace the fan.
Operates at low-speed too long	Decrease low-speed operation time. Change to dedicated motor for the drive. Increase the motor capacity.
Accel./ Decel. time and working cycle is too short	Increase setting values for Pr.01-12–01-19 (accel./ decel. time).
V/F voltage is too high	Adjust settings for Pr.01-01–01-08 (V/F curve), especially the setting value for the mid-point voltage (if the mid-point voltage is set too small, the load capacity decreases at low-speed).
Check if the motor rated current matches the motor nameplate	Configure the correct rated current value of the motor again.
Check if the PTC is properly set and wired	Check the connection between PTC thermistor resistor and the heat protection.
Check if the setting for stall prevention is correct	Set the stall prevention to the proper value.
Unbalance three-phase impedance of the motor	Replace the motor.
Harmonics is too high	Use remedies to reduce harmonics.

ID No.	Display on LCD Keypad	Warning Name	Description
22_2	AUTO Warning oH3 Motor Over Heat	Motor over-heating (oH3) PT100	Motor over-heating warning. The AC motor drive detects the temperature inside the motor is too high.
Action and Reset			
Action level	Pr.03-00=11 (PT100), PT100 input level > Pr.06-57 (default=7V)		
Action time	Immediately act		
Warning setting parameter	Error treatment: Pr.06-29 0: Warn and keep operating 1: Fault and ramp to stop 2: Fault and coast to stop 3: No warning When Pr.06-29=0 and when the temperature is < Pr.06-56 level, the oH3 warning automatically clears. If the temperature is between Pr.06-56 and Pr.06-57, the frequency outputs according to the operating frequency setting for Pr.06-58.		
Reset method	When Pr.06-29=0, oH3 displays “Warning”. When the temperature is < Pr.06-56 level, the oH3 warning automatically clears.		
Reset condition	When the temperature is < Pr.06-56 level, the oH3 warning automatically clears.		
Record	N/A		
Cause	Corrective Actions		
Motor locked	Clear the motor lock status.		
The load is too large	Decrease loading. Replace with a motor with larger capacity.		
Ambien temperature is too high	Change the installed place if there are heating devices in the surroundings. Install/ add cooling fan or air conditioner to lower the ambient temperature.		
Motor cooling system error	Check the cooling system to make it work normally.		
Motor fan error	Replace the fan.		
Operates at low-speed too long	Decrease low-speed operation time. Change to dedicated motor for the drive. Increase the motor capacity.		
Accel./ Decel. time and working cycle is too short	Increase the setting values for Pr.01-12–01-19 (accel./ decel. time).		
V/F voltage is too high	Adjust the settings for Pr.01-01–01-08 (V/F curve), especially the setting value for the mid-point voltage (if the mid-point voltage is set too small, the load capacity decreases at low-speed).		
Check if the motor rated current matches the motor nameplate	Configure the correct rated current value of the motor again.		
Check if the PT100 is properly set and wired	Check the connection between PT100 thermistor resistor and the heat protection.		
Check if the setting for stall prevention is correct	Set the stall prevention to the proper value.		
Unbalance three-phase impedance of the motor	Replace the motor.		
Harmonics is too high	Use remedies to reduce harmonics.		

ID No.	Display on LCD Keypad	Warning Name	Description
24	AUTO Warning oSL Over Slip Warn	Over slip warning (oSL)	Over slip warning. By using the maximum slip (Pr.10-29) as the base, when the drive outputs at constant speed, and the F>H or F<H exceeds Pr.07-29 level and Pr.07-30 setting time, 100% Pr.07-29 = Pr.10-29.
Action and Reset			
Action level		When the drive outputs at constant speed, and F>H or F<H exceeds the Pr.07-29 level	
Action time		Pr.07-30	
Warning setting parameter		Pr.07-31=0 Warning 0: Warn and keep operation 1: Fault and ramp to stop 2: Fault and coast to stop 3: No warning	
Reset method		When Pr.07-31=0 and when the drive outputs at constant speed, and F>H or F<H no longer exceeds the Pr.07-29 level, the oSL warning automatically clears.	
Reset condition		N/A	
Record		N/A	
Cause		Corrective Actions	
Check if the motor parameter is correct		Check the motor parameter.	
The load is too large		Decrease the loading.	
Check if the settings for Pr.07-29, Pr.07-30 and Pr.10-29 are properly set		Check the parameter settings for oSL protection.	

ID No.	Display on LCD Keypad	Warning Name	Description
25	AUTO Warning tUn Auto tuning	Auto tuning (tUn)	Parameter auto-tuning is processing. When running auto-tuning, the keypad displays “tUn”.
Action and Reset			
Action level		When running Pr.05-00 motor parameter auto-tuning, the keypad displays “tUn”.	
Action time		N/A	
Warning setting parameter		N/A	
Reset method		When auto-tuning is finished and no error occurs, the warning automatically clears.	
Reset condition		When auto-tuning is finished and no error occurs.	
Record		N/A	
Cause		Corrective Actions	
The motor parameter is running auto-tuning		When the auto-tuning is finished, the warning automatically clears.	

ID No.	Display on LCD Keypad	Warning Name	Description
28	AUTO Warning OPHL Output PHL Warn	Output phase loss (OPHL)	Output phase loss
Action and Reset			
Action level		Pr.06-47	
Action time		N/A	
Warning setting parameter		Pr.06-45 0: Warn and keep operating 1: Fault and ramp to stop 2: Fault and coast to stop 3: No warning	
Reset method		If Pr.06-45 is set to 0, the OPHL warning automatically clears after the drive stops.	
Reset condition		N/A	
Record		N/A	
Cause		Corrective Actions	
Unbalanced three-phase impedance of the motor		Replace the motor.	
Check if the wiring is incorrect		Check the cable. Replace the cable.	
Check if the motor is a single-phase motor		Choose a three-phase motor.	
Check if the current sensor is broken		Check if the control board cable is loose. If yes, reconnect the cable and run the drive to test. If the error still occurs, return to the factory for repair. Check if the three-phase current is balanced with a current clamp meter. If the current is balanced and the OPHL error still shows on the display, return to the factory for repair.	
If capacity of the drive is larger than the motor		Choose the matches capacity of the drive and motor.	

ID No.	Display on LCD Keypad	Warning Name	Description
30	AUTO Warning SE3 Copy Model Err 3	Copy model error 3 (SE3)	Keypad COPY error 3: copy model error
Action and Reset			
Action level		“SE3” warning occurs when different drive identity codes are found during copying parameters.	
Action time		Immediately act when the error is detected	
Warning setting parameter		N/A	
Reset method		Manual reset	
Reset condition		N/A	
Record		N/A	
Cause		Corrective Actions	
Keypad copy between different power range drives		It is mainly to prevent parameter copies between different HP/models.	

ID No.	Display on LCD Keypad	Warning Name	Description
36	AUTO Warning CGdn Guarding T-out	CANopen guarding time-out (CGdn)	CANopen guarding time-out 1
Action and Reset			
Action level		When CANopen Node Guarding detects that one of the slaves does not response, the CGdn error displays. The upper unit sets factor and time during configuration.	
Action time		The time that upper unit sets during configuration	
Warning setting parameter		N/A	
Reset method		Manual reset	
Reset condition		The upper unit sends a reset package to clear this fault.	
Record		N/A	
Cause		Corrective Actions	
The guarding time is too short, or less detection times		Increase the guarding time (Index 100C) and detection times.	
Malfunction caused by interference		1. Verify the wiring and grounding of the communication circuit. It is recommended to separate the communication circuit from the main circuit, or wire in 90 degree for effective anti-interference performance. 2. Make sure the communication circuit is wired in series. 3. Use CANopen cable or add terminating resistance.	

ID No.	Display on LCD Keypad	Warning Name	Description
37	AUTO Warning CHbn Heartbeat T-out	CANopen heartbeat error (CHbn)	CANopen heartbeat error
Action and Reset			
Action level		When CANopen Heartbeat detects that one of the slaves does not response, the CHbn error shows. The upper unit sets the confirming time of producer and consumer during configuration.	
Action time		The upper unit sets the confirming time of producer and consumer during configuration.	
Warning setting parameter		N/A	
Reset method		Manual reset	
Reset condition		The upper unit sends a reset package to clear this fault	
Record		When Pr.00-21≠3, CHbn is a “Warning”, and the warning is not recorded	
Cause		Corrective Actions	
The heartbeat time is too short		Increase heartbeat time (Index 1016)	
Malfunction caused by interference		1. Verify the wiring and grounding of the communication circuit. It is recommended to separate the communication circuit from the main circuit, or wire in 90 degree for effective anti-interference performance. 2. Make sure the communication circuit is wired in series. 3. Use CANopen cable or add terminating resistance.	
Communication cable is broken or bad connected		Check or replace the communication cable.	

ID No.	Display on LCD Keypad	Warning Name	Description
39	AUTO Warning CbFn Can Bus Off	CANopen bus off error (CbFn)	CANopen BUS off error
Action and Reset			
Action level		Hardware	When CANopen card is not installed, CbFn fault will occur.
		Software	When the master received wrong communication package, CbFn fault will occur. Too much interference on BUS When the CAN_H and CAN_L communication cable is short, the master receives wrong package, and CbFn fault occurs.
Action time		Immediately act when the fault is detected	
Warning setting parameter		N/A	
Reset method		Manual Reset	
Reset condition		Cycle the power	
Record		When Pr.00-21≠3, CbFn is a “Warning”, and the warning is not recorded	
Cause		Corrective Actions	
Check if the CANopen card is installed		Make sure the CANopen card is installed.	
Check if the CANopen speed is correct		Reset CANopen speed (Pr.09-37)	
Malfunction caused by interference		1. Verify the wiring and grounding of the communication circuit. It is recommended to separate the communication circuit from the main circuit, or wire in 90 degree for effective anti-interference performance. 2. Make sure the communication circuit is wired in series. 3. Use CANopen cable or add terminating resistance.	
Communication cable is broken or bad connected		Check or replace the communication cable.	

ID No.	Display on LCD Keypad	Warning Name	Description
40	AUTO Warning CIdn CAN/S Idx exceed	CANopen index error (CIdn)	CANopen Index error
Action and Reset			
Action level		CANopen communication Index error	
Action time		Immediately act when the fault is detected	
Warning setting parameter		N/A	
Reset method		Manual Reset	
Reset condition		Upper unit sends a reset package to clear this fault	
Record		When Pr.00-21≠3, CIdn is a “Warning”, and the warning is not recorded	
Cause		Corrective Actions	
Incorrect setting of CANopen index		Reset CANopen Index (Pr.00-02=7)	

ID No.	Display on LCD Keypad	Warning Name	Description
41	AUTO Warning CAdn CAN/S Addres set	CANopen station address error (CAdn)	CANopen station address error (only supports 1–127)
Action and Reset			
Action level		CANopen station address error	
Action time		Immediately act when the fault is detected	
Warning setting parameter		N/A	
Reset method		Manual Reset	
Reset condition		Pr.00-02=7	
Record		When Pr.00-21≠3, CAdn is a “Warning”, and the warning is not recorded	
Cause		Corrective Actions	
Incorrect setting of CANopen station address		1. Disable CANopen (Pr.09-36=0) 2. Reset CANopen (Pr.00-02=7) 3. Reset CANopen station address (Pr.09-36)	

ID No.	Display on LCD Keypad	Warning Name	Description
42	AUTO Warning CFrn CAN/S FRAM fail	CANopen memory error (CFrn)	CANopen memory error
Action and Reset			
Action level		When the user update firmware version of the control board, the FRAM internal data will not be changed, then CFrn fault will occur.	
Action time		Immediately act when the fault is detected	
Warning setting parameter		N/A	
Reset method		Manual Reset	
Reset condition		Pr.00-02=7	
Record		When Pr.00-21≠3, CFrn is a “Warning”, and the warning is not recorded	
Cause		Corrective Actions	
CANopen internal memory error		1. Disable CANopen (Pr.09-36=0) 2. Reset CANopen (Pr.00-20=7) 3. Reset CANopen station address (Pr.09-36)	

ID No.	Display on LCD Keypad	Warning Name	Description
43	AUTO Warning CSdn SDO T-out	CANopen SDO time-out (CSdn)	SDO transmission time-out (only shows on master station)
Action and Reset			
Action level		When the CANopen master transmits SDO command, and the Slave response “time-out”, CSdn warning will occur.	
Action time		Immediately act when the fault is detected	
Warning setting parameter		N/A	
Reset method		When the master resends a SDO command and receives the response, the warning automatically clears.	
Reset condition		N/A	
Record		N/A	
Cause		Corrective Actions	
Slave is not connected		Connect slave and CANopen BUS.	
The synchronize cycle is set too short		Increase the synchronization time (Index 1006)	
Malfunction caused by interference		1. Verify the wiring and grounding of the communication circuit. It is recommended to separate the communication circuit from the main circuit, or wire in 90 degree for effective anti-interference performance. 2. Make sure the communication circuit is wired in series. 3. Use CANopen cable or add terminating resistance.	
Disconnection or bad connection of the communication cable		Check the status of the cable, or replace the cable.	

ID No.	Display on LCD Keypad	Warning Name	Description
44	AUTO Warning CSbn Buf Overflow	CANopen SDO receives register overflow (CSbn)	CANopen SDO receives register overflow
Action and Reset			
Action level		The upper unit sends too much SDO and causes buffer overflow	
Action time		Immediately act when the fault is detected	
Warning setting parameter		N/A	
Reset method		The upper unit sends a reset package to clear the warning.	
Reset condition		N/A	
Record		N/A	
Cause		Corrective Actions	
Too much SDO from the upper unit		Check if the master sends too much SDO command. Make sure the master sends SDO command according to the command format.	

ID No.	Display on LCD Keypad	Warning Name	Description
46	AUTO Warning CPtn Error Protocol	CANopen format error (CPtn)	CANopen protocol format error

Action and Reset	
Action level	The slave detects that data from the upper unit cannot be recognized, and then shows CPtn warning
Action time	Immediately displays when the fault is detected
Warning setting parameter	N/A
Reset method	The upper unit sends a reset packet to clear the warning
Reset condition	N/A
Record	N/A

Cause	Corrective Actions
The upper unit sends incorrect communication packet	Make sure the master sends the packet based on CANopen DS301 standard command format.

ID No.	Display on LCD Keypad	Warning Name	Description
47	AUTO Warning PLrA RTC Adjust	RTC adjust (PLrA)	PLC (RTC) is not adjusted

Action and Reset		
Action level	When using RTC function for PLC program, and PLC detects unreasonable RTC time, PLrA warning displays.	
Action time	Immediately displays when the fault is detected	
Warning setting parameter	N/A	
Reset method	Auto	Stops the PLC and runs again, the warning automatically clears
	Manual	Manual reset to clear this warning
Reset condition	Cycle the power	
Record	N/A	

Cause	Corrective Actions
When using RTC function for PLC program, and the drive is power off over 7 days or KPC-CC01 does not connect to the drive for a long time, the RTC time is different with the internal calculated time when re-connect the keypad to the drive.	1. Stop the PLC program and restart it. 2. Adjust the RTC time and cycle the power.
KPC-CC01 does not adjust the RTC time	Adjust the RTC time and cycle the power.
PLC detects unreasonable RTC time	1. Stop the PLC program and restart it. 2. Cycle the power.
Replace with a new KPC-CC01	1. Stop the PLC program and restart it. 2. Cycle the power.

ID No.	Display on LCD Keypad	Warning Name	Description
49	HAND Warning PLrt Keypad RTC TOut	Keypad RTC time-out (PLrt)	PLC (RTC) error
Action and Reset			
Action level		N/A	
Action time		N/A	
Warning setting parameter		N/A	
Reset method		N/A	
Reset condition		Cycle the power	
Record		N/A	
Cause		Corrective Actions	
KPC-CC01 is not connected to the control board while using the RTC function		Do not remove the KPC-CC01 keypad while using RTC function.	

ID No.	Display on LCD Keypad	Warning Name	Description
50	AUTO Warning PLod Opposite Defect	PLC opposite defect (PLod)	PLC download error warning
Action and Reset			
Action level		During PLC downloading, the program source code detects incorrect address (e.g. the address exceeds the range), then the PLod warning shows.	
Action time		Immediately displays when the fault is detected	
Warning setting parameter		N/A	
Reset method		Check if the program is correct and re-download the program. If the fault does not exist, the warning automatically clears.	
Reset condition		N/A	
Record		N/A	
Cause		Corrective Actions	
Incorrect component number is found when downloading the PLC program		Use the correct component number.	

ID No.	Display on LCD Keypad	Warning Name	Description
51	AUTO Warning PLSv Save mem defect	PLC save memory error (PLSv)	Data error during PLC operation
Action and Reset			
Action level		The program detects incorrect written address (e.g. the address has exceeds the range) during PLC operation, then the PLSv warning shows.	
Action time		Immediately displays when the fault is detected	
Warning setting parameter		N/A	
Reset method		Check if the program is correct and re-download the program. If the fault does not exist, the warning automatically clears.	
Reset condition		N/A	
Record		N/A	
Cause		Corrective Actions	
An incorrect written address is detected during PLC operation		Make sure the write-in address is correct and re-download the program.	

ID No.	Display on LCD Keypad	Warning Name	Description
52	AUTO Warning PLdA Data defect	Data defect (PLdA)	Data error during PLC operation
Action and Reset			
Action level		The program detects incorrect write-in address when translating the program source code, then PLSv warning acts.	
Action time		Immediately displays when the fault is detected	
Warning setting parameter		N/A	
Reset method		Check if the program is correct and re-download the program. If the fault does not exist, the warning automatically clears.	
Reset condition		N/A	
Record		N/A	
Cause		Corrective Actions	
During PLC operation, the external Modbus has written/read incorrect data to internal PLC program		Check if the upper unit transmits the correct command	

ID No.	Display on LCD Keypad	Warning Name	Description
53	AUTO Warning PLFn Function defect	Function defect (PLFn)	PLC download function code error
Action and Reset			
Action level		The program detects incorrect command (unsupported command) during PLC downloading, then PLFn warning acts.	
Action time		Immediately displays when the fault is detected	
Warning setting parameter		N/A	
Reset method		Check if the program is correct and re-download the program. If the fault does not exist, the warning automatically clears.	
Reset condition		N/A	
Record		N/A	
Cause		Corrective Actions	
Unsupported command has used while downloading the program		Check if the firmware of the drive is the old version. If yes, please contact Delta.	

ID No.	Display on LCD Keypad	Warning Name	Description
54	AUTO Warning PLor Buf overflow	PLC buffer overflow (PLor)	PLC register overflow
Action and Reset			
Action level		When PLC runs the last command and the command exceeds the maximum capacity of the program, the PLor warning shows.	
Action time		Immediately displays when the fault is detected	
Warning setting parameter		N/A	
Reset method		Check if the program is correct and re-download the program. If the fault does not exist, the warning automatically clears.	
Reset condition		N/A	
Record		N/A	
Cause		Corrective Actions	
The program detects source code error during PLC operation		1. Disable PLC 2. Delete PLC program (Pr.00-02=6) 3. Enable PLC 4. Re-download PLC program	

ID No.	Display on LCM Keypad	Warning Name	Description
55	AUTO Warning PLFF Function defect	Function defect (PLFF)	Function code error during PLC operation
Action and Reset			
Action level		The program detects incorrect command (unsupported command) during PLC operation, then PLFF warning shows.	
Action time		Immediately displays when the fault is detected	
Warning setting parameter		NA	
Reset method		Check if the program is correct and re-download the program. If the fault does not exist, the warning automatically clears.	
Reset condition		N/A	
Record		N/A	
Cause		Corrective Actions	
The PLC runs an incorrect command during operation		When starting the PLC function and there is no program in the PLC, the PLFF warning shows. This is a normal warning, please download the program.	

ID No.	Display on LCD Keypad	Warning Name	Description
56	AUTO Warning PLSn Check sum error	Checksum error (PLSn)	PLC checksum error
Action and Reset			
Action level		PLC checksum error is detected after power on, then PLSn warning shows	
Action time		Immediately displays when the fault is detected	
Warning setting parameter		NA	
Reset method		Check if the program is correct and re-download the program. If the fault does not exist, the warning automatically clears.	
Reset condition		N/A	
Record		N/A	
Cause		Corrective Actions	
The program detects checksum error during PLC operation		1. Disable PLC 2. Remove PLC program (Pr.00-02=6) 3. Enable PLC 4. Re-download PLC program	

ID No.	Display on LCD Keypad	Warning Name	Description
57	AUTO Warning PLEd No end command	No end command (PLEd)	PLC end command is missing
Action and Reset			
Action level		The “End” command is missing until the last command is executed, the PLEd warning shows	
Action time		Immediately displays when the fault is detected	
Warning setting parameter		NA	
Reset method		Check if the program is correct and re-download the program. If the fault does not exist, the warning automatically clears.	
Reset condition		N/A	
Record		N/A	
Cause		Corrective Actions	
There is no “END” command during PLC operation		1. Disable PLC 2. Remove PLC program (Pr.00-02=6) 3. Enable PLC 4. Re-download PLC program	

ID No.	Display on LCD Keypad	Warning Name	Description
58	AUTO Warning PLCr PLC MCR error	PLC MCR error (PLCr)	PLC MCR command error
Action and Reset			
Action level		The MC command is detected during PLC operation, but there is no corresponded MCR command, then the PLCr warning shows.	
Action time		Immediately displays when the fault is detected	
Warning setting parameter		NA	
Reset method		Check if the program is correct and re-download the program. If the fault does not exist, the warning automatically clears.	
Reset condition		N/A	
Record		N/A	
Cause		Corrective Actions	
The MC command is continuously used for more than 9 times		The MC command cannot be used continuously for 9 times. Check and reset the program, then re-download the program.	

ID No.	Display on LCD Keypad	Warning Name	Description
59		PLC download fail (PLdF)	PLC download fail
Action and Reset			
Action level		PLC download fail due to momentary power loss during the downloading, when power is ON again, PLdF warning shows.	
Action time		Immediately displays when the fault is detected	
Warning setting parameter		NA	
Reset method		Check if the program is correct and re-download the program. If the fault does not exist, the warning automatically clears.	
Reset condition		N/A	
Record		N/A	
Cause		Corrective Actions	
PLC download is forced to stop, so the program write-in is incomplete		Check if there is any error in the program and re-download the PLC program	

ID No.	Display on LCD Keypad	Warning Name	Description
60	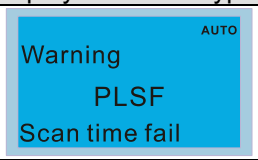	PLC scan time fail (PLSF)	PLC scan time exceeds the maximum allowable time
Action and Reset			
Action level		When the PLC scan time exceeds the maximum allowable time (400ms), PLSF warning shows.	
Action time		Immediately displays when the fault is detected	
Warning setting parameter		NA	
Reset method		Check if the program is correct and re-download the program. If the fault does not exist, the warning automatically clears.	
Reset condition		N/A	
Record		N/A	
Cause		Corrective Actions	
The PLC scan time exceeds the maximum allowable time (400ms)		Check if the source code is correct and re-download the program	

ID No.	Display on LCD Keypad	Warning Name	Description
61	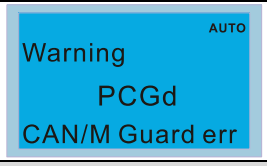	CAN/M guarding error (PCGd)	CANopen Master guarding error
Action and Reset			
Action level		When CANopen Master Node Guarding detects that one of the Slaves does not response, the PCGd warning will display	
Action time		Immediately displays when the fault is detected	
Warning setting parameter		NA	
Reset method		Check if the program is correct and re-download the program. If the fault does not exist, the warning automatically clears.	
Reset condition		N/A	
Record		N/A	
Cause		Corrective Actions	
Slave is not connected or CANopen BUS cable is not connected		Connect the Slave and CANopen BUS	
Malfunction caused by interference		1. Verify wiring/grounding of the communication circuit. It is recommended to separate the communication circuit from the main circuit, or wire in 90 degree for effective anti-interference performance. 2. Make sure the communication circuit is wired in series. 3. Use CANopen cable or add terminating resistance.	

Communication cable is broken or bad connected	Check or replace the communication cable.

ID No.	Display on LCD Keypad	Warning Name	Description
62	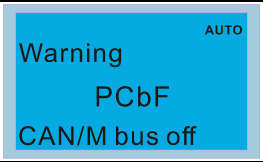	CAN/M BUS off (PCbF)	CANopen Master BUS off
Action and Reset			
Action level	When the CANopen master detects error packets more than 255 during the BUS off detection, or when the CANopen card is not installed, the PCbF warning displays. If the BUS cable is not connected, the drive will not receive issues packet, and the PCbF warning will not display.		
Action time	Immediately displays when the fault is detected		
Warning setting parameter	NA		
Reset method	Cycle the power		
Reset condition	N/A		
Record	N/A		
Cause	Corrective Actions		
Malfunction caused by interference	1. Verify wiring/grounding of the communication circuit. It is recommended to separate the communication circuit from the main circuit, or wire in 90 degree for effective anti-interference performance. 2. Make sure the communication circuit is wired in series. 3. Use CANopen cable or add terminating resistance.		
Communication cable is broken or bad connected	Check or replace the communication cable.		

ID No.	Display on LCD Keypad	Warning Name	Description
63	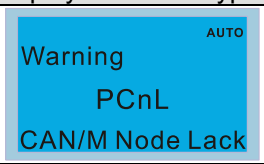	CAN/M node lack (PCnL)	CANopen Master node error
Action and Reset			
Action level	When the CANopen master configures different setting nodes from the actual nodes, the PCnL warning displays.		
Action time	Immediately displays when the fault is detected		
Warning setting parameter	N/A		
Reset method	When connect BUS to the original slave, or change the configured node numbers to meet the actual node quantity, the warning automatically clears.		
Reset condition	N/A		
Record	N/A		
Cause	Corrective Actions		
The configured node quantity is different from the actual nodes	Connect BUS to the original slave, or change the configured node numbers to meet the actual node quantity		
Communication cable is broken or bad connected	Check or replace the communication cable.		

ID No.	Display on LCD Keypad	Warning Name	Description
64	AUTO Warning PCCt CAN/M Cycle Time	CAN/M cycle time-out (PCCt)	CANopen Master cycle time-out
Action and Reset			
Action level		When the transmitted packet from CANopen master exceeds the maximum allowable quantity in a certain time, the PCCt warning displays.	
Action time		Immediately displays when the fault is detected	
Warning setting parameter		N/A	
Reset method		The warning automatically clears when changing the configuration and re-executing the program.	
Reset condition		N/A	
Record		N/A	
Cause		Corrective Actions	
When the transmitted packet from CANopen master exceeds the maximum allowable quantity in a certain time		Increase the time setting of D1090 synchronization cycle	

ID No.	Display on LCD Keypad	Warning Name	Description
65	AUTO Warning PCSF CAN/M SDO over	CAN/M SDO over (PCSF)	CANopen Master SDO overflow
Action and Reset			
Action level		When the CANopen master transmits too much SDO that causes buffer overflow, the PCSF warning displays	
Action time		Immediately displays when the fault is detected	
Warning setting parameter		N/A	
Reset method		Cycle the power, or stop the PLC and run the PLC again	
Reset condition		N/A	
Record		N/A	
Cause		Corrective Actions	
Internal PLC transmits too much SDO at once		The PLC program needs to confirm receiving the SDO feedback data before sending another SDO command.	

ID No.	Display on LCD Keypad	Warning Name	Description
66	AUTO Warning PCSd CAN/M Sdo Tout	CAN/M SDO time-out (PCSd)	CANopen Master SDO time-out
Action and Reset			
Action level		When the CANopen master sends a SDO command, and the BUS is too busy to transmit the command, PCSd warning displays.	
Action time		Immediately displays when the fault is detected	
Warning setting parameter		N/A	
Reset method		The warning automatically clears when the SDO transmits normally.	
Reset condition		N/A	
Record		N/A	
Cause		Corrective Actions	
When the CANopen master transmits a SDO command, and does not receive feedback from the Slave within 1 sec.		Check if the Slave responds within 1 second.	

ID No.	Display on LCD Keypad	Warning Name	Description
67	AUTO Warning PCAd CAN/M Addres set	CAN/M address error (PCAd)	CANopen Master station address error
Action and Reset			
Action level		When the CANopen master detects an incorrect or repeated station address from the Slave, the PCAd warning displays.	
Action time		Immediately displays when the fault is detected	
Warning setting parameter		N/A	
Reset method		The warning automatically clears when reset the station address and run the program again.	
Reset condition		N/A	
Record		N/A	
Cause		Corrective Actions	
When the CANopen master detects an incorrect or repeated station address from the Slave		Set the correct slave station address.	

ID No.	Display on LCD Keypad	Warning Name	Description
68	AUTO Warning PCTo CAN/M T-Out	CAN/M time-out (PCTo)	When the drive receives an incorrect packet, it means that there is interference or the command from the upper unit does not meet the CANopen command format.
Action and Reset			
Action level		N/A	
Action time		Immediately acts when receiving the command	
Warning setting parameter		N/A	
Reset method		The warning automatically clears after receives another normal packet	
Reset condition		N/A	
Record		N/A	
Cause		Corrective Actions	
Malfunction caused by interference		1. Verify wiring/grounding of the communication circuit. It is recommended to separate the communication circuit from the main circuit, or wire in 90 degree for effective anti-interference performance. 2. Make sure the communication circuit is wired in series. 3. Use CANopen cable or add terminating resistance.	
The command from the upper unit does not meet the CANopen format		Please contact Delta for further confirmation.	

ID No.	Display on LCD Keypad	Warning Name	Description
70	AUTO Warning ECid ExCom ID failed	ExCom ID fail (ECid)	Duplicate MAC ID error Node address setting error
Action and Reset			
Action level		Duplicate setting of MAC ID Node address setting error	
Action time		N/A	
Warning setting parameter		N/A	
Reset method		Correct the setting and cycle the power	
Reset condition		N/A	
Record		N/A	
Cause		Corrective Actions	
The setting address exceeds the range (0–63)		Check the address setting of the communication card (Pr.09-70)	
The speed setting exceeds the range		Standard: 0–2, non-standard: 0–7	

The address is duplicated with other nodes on the BUS	Reset the address

ID No.	Display on LCD Keypad	Warning Name	Description
71	AUTO Warning ECLv ExCom pwr loss	ExCom power loss (ECLv)	Low voltage of communication card
Action and Reset			
Action level		The 5V power that drive provides to communication card is to low	
Action time		Immediately acts	
Warning setting parameter		N/A	
Reset method		Re-power	
Reset condition		N/A	
Record		N/A	
Cause		Corrective Actions	
The 5V power that drive provides to communication card is to low		1. Switch the communication card to other C2000 drives and observe if there is ECLv warning shown. If yes, replace with a new communication card; if not, replace the drive. 2. Use another communication card to test if the ECLv warning has shown as well. If not, replace the card; if yes, replace the drive.	
The card is loose		Make sure the communication card is well inserted.	

ID No.	Display on LCD Keypad	Warning Name	Description
72	AUTO Warning ECtt ExCom Test Mode	ExCom test mode (ECtt)	Communication card is in the test mode
Action and Reset			
Action level		Communication card is in the test mode	
Action time		Immediately acts	
Warning setting parameter		N/A	
Reset method		Cycle the power and enter the normal mode	
Reset condition		N/A	
Record		N/A	
Cause		Corrective Actions	
Communication command error		Cycle the power	

ID No.	Display on LCD Keypad	Warning Name	Description
73	AUTO Warning ECbF ExCom Bus off	ExCom Bus off (ECbF)	The communication card detects too much errors in the BUS, then enters the BUS-OFF status and stop communicating
Action and Reset			
Action level		When the drive detects BUS-off (for DeviceNet)	
Action time		Immediately acts	
Warning setting parameter		N/A	
Reset method		Cycle the power	
Reset condition		N/A	
Record		N/A	
Cause		Corrective Actions	
Poor connection of the cable		Re-connect the cable	
Bad quality of the cable		Replace the cable	

ID No.	Display on LCD Keypad	Warning Name	Description
74	AUTO Warning ECnP ExCom No power	ExCom no power (ECnP)	There is no power supply on the DeviceNet
Action and Reset			
Action level	There is no power supply on the DeviceNet		
Action time	Immediately acts		
Warning setting parameter	N/A		
Reset method	Re-power		
Reset condition	N/A		
Record	N/A		
Cause	Corrective Actions		
The drive detects that DeviceNet has no power	Check if the cable and power is normal. If yes, return to the factory for repair.		

ID No.	Display on LCD Keypad	Warning Name	Description
75	AUTO Warning ECFF ExCom Facty def	ExCom factory defect (ECFF)	Factory default setting error
Action and Reset			
Action level	Factory default setting error		
Action time	Immediately acts		
Warning setting parameter	N/A		
Reset method	Cycle the power		
Reset condition	N/A		
Record	N/A		
Cause	Corrective Actions		
Factory default setting error	Use DCISoft to reset to the default value.		

ID No.	Display on LCD Keypad	Warning Name	Description
76	AUTO Warning ECiF ExCom Inner err	ExCom inner error (ECiF)	Serious internal error
Action and Reset			
Action level	Internal memory saving error		
Action time	Immediately acts		
Warning setting parameter	N/A		
Reset method	Cycle the power		
Reset condition	N/A		
Record	N/A		
Cause	Corrective Actions		
Noise interference	Verify wiring of the control circuit, and wiring/grounding of the main circuit to prevent interference. Cycle the power.		
The memory is broken	Reset to the default value and check if the error still exists. If yes, replace the communication card.		

ID No.	Display on LCD Keypad	Warning Name	Description
77	AUTO Warning ECio ExCom IONet brk	ExCom IO Net break (ECio)	IO connection break off
Action and Reset			
Action level		IO connection between the communication card and the master is broken off	
Action time		Immediately acts	
Warning setting parameter		N/A	
Reset method		Manual reset	
Reset condition		Immediately reset	
Record		N/A	
Cause		Corrective Actions	
The cable is loose		Re-install the cable	
Incorrect parameter setting for master communication		Check the setting for master communication parameter	

ID No.	Display on LCD Keypad	Warning Name	Description
78	AUTO Warning ECPP ExCom Pr data	ExCom Parameter data error (ECPP)	Profibus parameter data error
Action and Reset			
Action level		N/A	
Action time		N/A	
Warning setting parameter		N/A	
Reset method		Manual reset	
Reset condition		Immediately reset	
Record		N/A	
Cause		Corrective Actions	
The GSD file is incorrect		Get the correct GSD file from the software	

ID No.	Display on LCD Keypad	Warning Name	Description
79	AUTO Warning ECPi ExCom Conf data	ExCom configuration data error (ECPi)	Profibus configuration data error
Action and Reset			
Action level		N/A	
Action time		N/A	
Warning setting parameter		N/A	
Reset method		Manual reset	
Reset condition		Immediately reset	
Record		N/A	
Cause		Corrective Actions	
The GSD file is incorrect		Get the correct GSD file from the software	

ID No.	Display on LCD Keypad	Warning Name	Description
80	AUTO Warning ECEF ExCom Link fail	Ethernet link fail (ECEF)	Ethernet cable is not connected
Action and Reset			
Action level		Hardware detection	
Action time		Immediately acts	
Warning setting parameter		N/A	
Reset method		Manual reset	
Reset condition		N/A	
Record		N/A	
Cause		Corrective Actions	
Ethernet cable is loose		Re-connect the cable	
Bad quality of Ethernet cable		Replace the cable	

ID No.	Display on LCD Keypad	Warning Name	Description
81	AUTO Warning ECto ExCom Inr T-out	Communication time-out (ECto)	Communication time-out for communication card and the upper unit
Action and Reset			
Action level		N/A	
Action time		N/A	
Warning setting parameter		N/A	
Reset method		N/A	
Reset condition		CMC-EC01: auto resets when the communication with the upper unit is back to normal	
Record		N/A	
Cause		Corrective Actions	
Communication card is not connected with the upper unit		Check if the connection of the communication cable is correct	
Communication error of the upper unit		Check if the communication of the upper unit is normal	

ID No.	Display on LCD Keypad	Warning Name	Description
82	AUTO Warning ECCS ExCom Inr CRC	Checksum error (ECCS)	Checksum error for communication card and the drive
Action and Reset			
Action level		Software detection	
Action time		N/A	
Warning setting parameter		N/A	
Reset method		Manual reset	
Reset condition		Immediately resets	
Record		N/A	
Cause		Corrective Actions	
Noise interference		Verify wiring of the control circuit, and wiring/grounding of the main circuit to prevent interference.	

ID No.	Display on LCD Keypad	Warning Name	Description
83	AUTO Warning ECrF ExCom Rtn def	Return defect (ECrF)	Communication card returns to the default setting
Action and Reset			
Action level		Communication card returns to the default setting	
Action time		N/A	
Warning setting parameter		N/A	
Reset method		Manual reset	
Reset condition		Immediately resets	
Record		N/A	
Cause		Corrective Actions	
Communication card is returning to default setting		No actions.	

ID No.	Display on LCD Keypad	Warning Name	Description
84	AUTO Warning ECo0 ExCom MTCP over	Modbus TCP over (Eco0)	MODBUS TCP exceeds maximum communication value
Action and Reset			
Action level		Hardware detection	
Action time		Immediately acts	
Warning setting parameter		N/A	
Reset method		Manual reset	
Reset condition		Immediately resets	
Record		N/A	
Cause		Corrective Actions	
The Master communication value is more than the allowable quantity of the communication card		Reduce Master communication value	
The upper unit is online without communicating, and does not break off the Modbus TCP link, causes occupy connection		Revise program of upper unit, the communication should be break off when it is not used for a long time	
A new Modbus TCP connection is built every time when the upper unit is connected to the communication card, which caused occupy connection		Revise program of upper unit: use the same Modbus TCP connection when connected to the same communication card	

ID No.	Display on LCD Keypad	Warning Name	Description
85	AUTO Warning ECo1 ExCom EIP over	EtherNet/IP over (ECo1)	Ethernet/IP exceeds maximum communication value
Action and Reset			
Action level		Hardware detection	
Action time		Immediately acts	
Warning setting parameter		N/A	
Reset method		Manual reset	
Reset condition		Immediately resets	
Record		N/A	
Cause		Corrective Actions	
The Master communication value is more than the allowable quantity of the communication card		Reduce Master communication value	
The upper unit is online without communicating, and does not break off the Modbus TCP link, causes occupy connection		Revise program of upper unit, the communication should be break off when it is not used for a long time	
A new Modbus TCP connection is built every time when the upper unit is connected to the communication card, which caused occupy connection		Revise program of upper unit: use the same Modbus TCP connection when connected to the same communication card	

ID No.	Display on LCD Keypad	Warning Name	Description
86	AUTO Warning ECiP ExCom IP fail	IP fail (ECiP)	IP setting error
Action and Reset			
Action level		Software detection	
Action time		Immediately acts	
Warning setting parameter		N/A	
Reset method		Manual reset	
Reset condition		Immediate reset	
Record		N/A	
Cause		Corrective Actions	
IP conflict		Reset IP	
DHCP IP configuration error		MIS check if DHCP Server works normally	

ID No.	Display on LCD Keypad	Warning Name	Description
87	AUTO Warning EC3F ExCom Mail fail	Mail fail (EC3F)	Mail warning: Alarm mail will be sent when the communication card establishes alarm conditions
Action and Reset			
Action level		Communication card establishes alarm conditions	
Action time		Immediately acts	
Warning setting parameter		N/A	
Reset method		Manual reset	
Reset condition		Immediately resets	
Record		N/A	
Cause		Corrective Actions	
Communication card establishes alarm conditions		No actions	

ID No.	Display on LCDKeypad	Warning Name	Description
88	AUTO Warning Ecby ExCom Busy	ExCom busy (ECbY)	Communication card busy: too much packets are received
Action and Reset			
Action level		Software detection	
Action time		N/A	
Warning setting parameter		N/A	
Reset method		Manual reset	
Reset condition		N/A	
Record		N/A	
Cause		Corrective Actions	
Communication packets are too much for the communication card to process		Reduce communication packets	

ID No.	Display on LCDKeypad	Warning Name	Description
89	AUTO Warning ECCb ExCom Card break	ExCom card break (ECCb)	Communication card break off warning
Action and Reset			
Action level		Communication card break off	
Action time		The time between communication card break off and ECCb displays: 1. EtherNet/IP: 3 sec. 2. Modbus TCP: 3 sec. 3. DeviceNet: 1 sec. 4. PROFIBUS: 1 sec. 5. EtherCAT: 0.1 sec.	
Warning setting parameter		N/A	
Reset method		Auto resets after communication card is re-installed	
Reset condition		Immediately resets	
Record		N/A	
Cause		Corrective Actions	
Communication card break off		Re-install communication card	

ID No.	Display on LCDKeypad	Warning Name	Description
90	AUTO Warning CPLP Copy PLC Pass Wd	Copy PLC: password error (CPLP)	Copy PLC password error. When KPC-CC01 is processing PLC copy and the PLC password is incorrect, the CPLP warning shows.
Action and Reset			
Action level		PLC password is incorrect	
Action time		Immediately acts	
Warning setting parameter		N/A	
Reset method		Manual reset	
Reset condition		Directly resets	
Record		N/A	
Cause		Corrective Actions	
PLC password is incorrect		Reset and enter correct PLC password	

ID No.	Display on LCD Keypad	Warning Name	Description
91	AUTO Warning CPL0 Copy PLC Mode Rd	Copy PLC: Read mode error (CPL0)	Copy PLC Read mode error
Action and Reset			
Action level	When copy PLC read mode with incorrect process		
Action time	Immediately acts		
Warning setting parameter	N/A		
Reset method	Manual reset		
Reset condition	Directly resets		
Record	N/A		
Cause	Corrective Actions		
When copy PLC read mode and the process is incorrect	Cycle the power and copy PLC read mode again		

ID No.	Display on LCD Keypad	Warning Name	Description
92	AUTO Warning CPL1 Copy PLC Mode Wt	Copy PLC: Write mode (CPL1)	Copy PLC write mode error
Action and Reset			
Action level	Copy PLC write mode with incorrect process		
Action time	Immediately acts		
Warning setting parameter	N/A		
Reset method	Manual reset		
Reset condition	Directly resets		
Record	N/A		
Cause	Corrective Actions		
When copy PLC write mode and the process is incorrect	Cycle the power and copy PLC read mode again		

ID No.	Display on LCD Keypad	Warning Name	Description
93	AUTO Warning CPLv Copy PLC Version	Copy PLC: version error (CPLv)	Copy PLC version error. When non-C2000 built-in PLC is copied to C2000 drive, the CPLv warning shows
Action and Reset			
Action level	Software detection		
Action time	Immediately acts		
Warning setting parameter	N/A		
Reset method	Manual reset		
Reset condition	Directly resets		
Record	N/A		
Cause	Corrective Actions		
Non-C2000 Plus PLC program is copied to C2000 Plus	Check if the copied PLC program is for C2000 Plus. Use the correct C2000 Plus PLC program.		

ID No.	Display on LCD Keypad	Warning Name	Description
94	AUTO Warning CPLS Copy PLC Size	Copy PLC: size error (CPLS)	Copy PLC Capacity size error
Action and Reset			
Action level		Software detection	
Action time		Immediately acts	
Warning setting parameter		N/A	
Reset method		Manual reset	
Reset condition		Directly resets	
Record		N/A	
Cause		Corrective Actions	
The PLC copied to C2000 Plus exceeds the allowable capacity		Check if the copied PLC program is for C2000 Plus Use C2000 Plus PLC program with correct capacity	

ID No.	Display on LCD Keypad	Warning Name	Description
95	AUTO Warning CPLF Copy PLC Func	Copy PLC: PLC function (CPLF)	KPC-CC01 Copy PLC function should be executed when PLC is off
Action and Reset			
Action level		Software detection	
Action time		Immediately acts	
Warning setting parameter		N/A	
Reset method		Manual reset	
Reset condition		Directly resets	
Record		N/A	
Cause		Corrective Actions	
PLC function is enabled when KPC-CC01 is running copy PLC		Disable PLC function first, then run the PLC copy function again	

ID No.	Display on LCD Keypad	Warning Name	Description
96	AUTO Warning CPLt Copy PLC TimeOut	Copy PLC: time-out (CPLt)	Copy PLC time out
Action and Reset			
Action level		Software detection	
Action time		Immediately acts	
Warning setting parameter		N/A	
Reset method		Manual reset	
Reset condition		Directly resets	
Record		N/A	
Cause		Corrective Actions	
KPC-CC01 is removed while copying PLC program		The KPC-CC01 cannot be removed during the PLC copy process	

ID No.	Display on LCD Keypad	Warning Name	Description
101	AUTO Warning ictn InrCOM Time Out	InrCOM time-out (ictn)	Internal communication time-out
Action and Reset			
Action level		When Pr.09-31=(-1) – (-10) (no -9) and the internal communication between Master and Slave is abnormal, the ictn warning shows.	
Action time		Immediately acts	
Warning setting parameter		N/A	
Reset method		Auto-reset	
Reset condition		The warning automatically clears when the communication is back to normal condition	
Record		N/A	
Cause		Corrective Actions	
Malfunction caused by interference		Verify wiring/grounding of the communication circuit. It is recommended to separate the communication circuit from the main circuit, or wire in 90 degree for effective anti-interference performance.	
Different communication conditions with the upper unit		Check if the setting for Pr.09-02 is the same as the setting for upper unit	
Communication cable break off or not connected well		Check the cable status or replace the cable	

ID No.	Display on LCD Keypad	Warning Name	Description
105	AUTO Warning SpdR Est-Speed REV	Estimated speed reverse (SpdR)	Estimated speed is in a reverse direction with motor actual running direction
Action and Reset			
Action level		Software detection	
Action time		Pr.10-09	
Warning setting parameter		Pr.10-08 0: Warn and keep operation 1: Fault and coast to stop 2: Fault and ramp to stop	
Reset method		Manual reset	
Reset condition		Immediately resets	
Record		N/A	
Cause		Corrective Actions	
The motor runs in reverse direction at start		Check if the motor is hold when started, or start the motor with speed source.	
The difference between motor parameter measured Rr and Rs value is too large		Normally the Rr value of IM is Rs*0.7. If there is much difference of the measured value (e.g. Rr=Rs*0.3), proceed the motor parameter auto-tuning again.	
Insufficient output torque is dragged to the reverse direction by the load.		Increase the current limit of Pr.06-12, so as to increase the output torque.	

ID No.	Display on LCD Keypad	Warning Name	Description
123	AUTO Warning dEb Dec. Energy backup	Deceleration energy backup (dEb)	Deceleration energy backup
Action and Reset			
Action level		Software detection	
Action time		N/A	
Warning setting parameter		0: Disable 1: dEb with auto accel./decel., the output frequency will note return after power reply. 2: dEb with auto accel./decel., the output frequency will return after power reply. 3: dEb low-voltage control, then increase to 350V_{DC}/700V_{DC} and decelerate to stop. 4: dEb high-voltage control of 350V_{DC}/700V_{DC} and decelerate to stop	
Reset method		Manual reset	
Reset condition		Immediately resets	
Record		N/A	
Cause		Corrective Actions	
Instantaneous power off or low voltage and unstable/ sudden heavy load of the power that cause the voltage drop		Check the power consumption	
Unexpected power off		Check the power consumption	

ID No.	Display on LCD Keypad	Warning Name	Description
125	AUTO Warning INDX Index Pulse Fail	Index Pulse Fail (INDX)	1. The Z position difference is bigger than 2 and occurs 2 times. Besides, more than 20 Z position differences bigger than 2 occur in 1 second, 2. The two Zindex position differences > 10 degree mechanical angle. The two situations mentioned above cause Index Pulse Fail.
Action and Reset			
Action level		N/A	
Action time		1 second	
Warning Setting Parameter		N/A	
Reset method		Auto-reset after the resolving the trouble.	
Reset condition		N/A	
Record		N/A	
Cause		Corrective Actions	
Zindex may be affected by noise		Verify if the wiring of the control circuit, the wiring of the main circuit and the grounding wiring are compatible to the noise immunity.	

ID No.	Display on LCD Keypad	Warning Name	Description
126	AUTO Warning nHoY Not Home Yet	Not Home Yet (nHoY)	The motor drive receives an absolute motion command before homing is completed.
Action and Reset			
Action level		N/A	
Action time		Immediately acts	
Warning Setting Parameter		N/A	
Reset method		Press the STOP button on the keypad after you stop running the motor drive,	
Reset condition		Immediately resets	
Record		N/A	
Cause		Corrective Actions	
Error on the time sequence of system control.		Verify if anything wrong on the time sequence.	

Speed of homing is too slow	Verify if the frequency setting of homing is too slow which causes error on the control time sequence of the upper unit.

ID No.	Display on LCD Keypad	Warning Name	Description
127	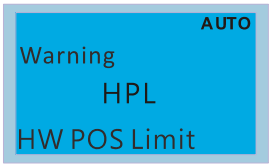	HW POS Limit (HPL)	When under FOCPG mode, the positive running limit (hardware limit switch) of the MI terminals is activated.
Action and Reset			
Action level	When under IMFOCPG/PMFOCPG mode, the motor drive reaches positive running limit.		
Action time	Immediately acts		
Warning Setting Parameter	N/A		
Reset method	Move the motor away from the limit position, the warning automatically clears.		
Reset condition	Immediately resets		
Record	N/A		
Cause	Corrective Actions		
Error occurs on hardware limit switch	1. Verify if the switch of hardware limit works properly. 2. Verify if the switch of hardware limit is installed at the right position. 3. Verify if the corresponding MI terminals of the positive limit switch is at the right status such as Normal Open and Normal Close.		
Overshoot	1. Verify if the Acceleration/ Deceleration time of the motor drive is right. 2. Verify if the frequency command of the motor drive is right.		
Select the wrong homing method	Verify if the mechanical parts and homing method co-work properly.		

ID No.	Display on LCD Keypad	Warning Name	Description
128	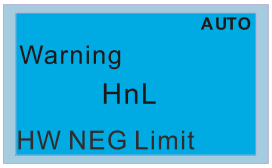	HW NEG Limit (HnL)	When under FOCPG mode, the negative running limit (hardware limit switch) of the MI terminals is activated.
Action and Reset			
Action level	When under IMFOCPG/PMFOCPG mode, the motor drive reaches negative running limit.		
Action time	Immediately acts		
Warning Setting Parameter	N/A		
Reset method	Move the motor away from the limit position, the warning automatically clears.		
Reset condition	Immediately reset		
Record	N/A		
Cause	Corrective Actions		
Error occurs on hardware limit switch	1. Verify if the switch of hardware limit works properly. 2. Verify if the switch of hardware limit is installed at the right position. 3. Verify if the corresponding MI terminals of the positive limit switch is at the right status such as Normal Open and Normal Close.		
Overshoot	1. Verify if the acceleration/ deceleration time of the motor drive is right. 2. Verify if the frequency command of the motor drive is right		
Select the wrong homing method	Verify if the mechanical parts and homing method co-work properly.		

ID No.	Display on LCD Keypad	Warning Name	Description
129	AUTO Warning SPL SW POS Limit	SW POS Limit (SPL)	When under FOCPG mode, the feedback position of the motor is higher than or equal to the software positive limit set by the parameters.
Action and Reset			
Action level		Pr.11-56, Pr.11-57	
Action time		Immediately acts	
Warning Setting Parameter		N/A	
Reset method		Move the motor away from the limit position, the warning automatically clears.	
Reset condition		Immediately resets	
Record		N/A	
Cause		Corrective Actions	
Error occurs on software limit switch		Verify if the setting of software limit switch at Pr.11-56 and Pr.11-57 is correct.	
Overshoot		1. Verify if the acceleration/ deceleration time of the motor drive is correct. 2. Verify if the frequency command of the motor drive is correct.	

ID No.	Display on LCD Keypad	Warning Name	Description
130	AUTO Warning SnL SW NEG Limit	SW NEG Limit (SnL)	When under FOCPG mode, the feedback position of the motor is lower than or equal to the negative limit set by the parameters.
Action and Reset			
Action level		Pr.11-58, Pr.11-59	
Action time		Immediately acts	
Warning Setting Parameter		N/A	
Reset method		Move the motor away from the limit position, the warning automatically clears.	
Reset condition		Immediately resets	
Record		N/A	
Cause		Corrective Actions	
Error occurs on software limit switch		Verify if the setting of software limit switch at Pr.11-58 and Pr.11-59 is correct.	
Overshoot		1. Verify if the acceleration/ deceleration time of the motor drive is correct. 2. Verify if the frequency command of the motor drive is correct.	

ID No.	Display on LCD Keypad	Warning Name	Description
131	AUTO Warning PoF Posn Overflow	Posn Overflow (PoF)	When the position record is bigger than the setting range at Pr.11-75.
Action and Reset			
Action level		Verify if the current position is over the setting range at Pr.11-75.	
Action time		Immediately acts	
Warning Setting Parameter		N/A	
Reset method		Stop running the motor drive, then manual reset.	
Reset condition		Immediately resets	
Record		N/A	
Cause		Corrective Actions	
Homing process incomplete		Verify if the homing process is completed.	
Position record is bigger than the setting range at Pr.11-75		Verify if the current position is over the upper and lower limit of Pr.11-75.	

ID No.	Display on LCD Keypad	Warning Name	Description
132	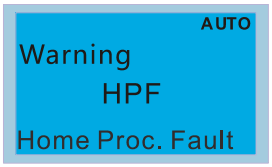	Home Proc. Fault (HPF)	Unusual signal occurs during the homing process,
Action and Reset			
Action level	N/A		
Action time	Immediately acts		
Warning Setting Parameter	N/A		
Reset method	Stop running the motor drive, then manual reset.		
Reset condition	Immediately resets		
Record	N/A		
Cause	Corrective Actions		
Unusual external signal is enabled	Verify if there's any error or signal is enabled and then interrupts the homing process.		
Press the STOP button during the homing process	Verify if anything wrong at control sequence.		

ID No.	Display on LCD Keypad	Warning Name	Description
133	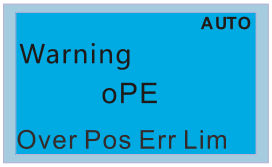	Over Pos Err Lim (oPE)	This warning code occurs: 1. When the positioning error of a position controller is bigger than the Pr.11-51 <Maximum allowable position-following error>. 2. And when Pr.11-54: Treatment to the large position control error is set as 0: Warn and continue operation
Action and Reset			
Action level	Pr.11-51		
Action time	Immediately acts		
Warning Setting Parameter	Pr.11-54		
Reset method	When the position following error is smaller than the maximum allowable position error, the warning automatically resets.		
Reset condition	Immediately resets		
Record	N/A		
Cause	Corrective Actions		
Acceleration/ Deceleration time error.	Verify if the acceleration time and the deceleration time is correct.		
Setting value of Pr.11-51 may be too small.	Verify if the setting value of Pr.11-51 is too small.		
The position control may not be working properly.	1. Verify if the position control works properly. 2. Verify if the settings of APR bandwidth control and the gain value for the APR feed forward are correct.		
The setting of command curve at the upper unit during the whole pulse positioning process may not be right.	If you set Pr.11-40 =1 (Input from external pulse) or set MI=90 (Position command source switch and choose 1: Input from external pulse), you need to verify if the acceleration/ deceleration curve of the pulse given by the upper unit is correct.		

[This page intentionally left blank]

Chapter 14 Fault Codes and Descriptions

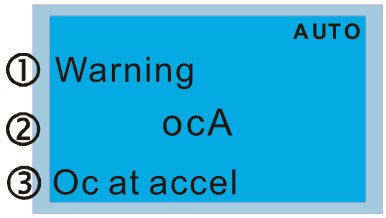

① Display error signal
② Abbreviate error code
③ Display error description

* : Refer to setting of Pr.06-17–Pr.06-22.

ID*	Display on LCD Keypad	Fault Name	Fault Descriptions
1	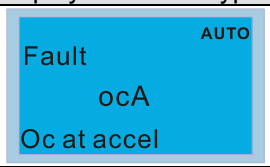	Over-current during acceleration (ocA)	Output current exceeds 2.4 times of rated current during acceleration. When ocA occurs, the drive closes the gate of the output immediately, the motor runs freely, and the display shows an ocA fault.

Action and Reset	
Action level	240% of rated current
Action time	Act immediately
Fault treatment parameter	N/A
Reset method	Manual reset
Reset condition	Reset in 5 sec. after the fault is cleared
Record	Yes

Cause	Corrective Actions
Acceleration time is too short	1. Increase the acceleration time 2. Increase the acceleration time of S curve 3. Set auto-acceleration and auto-deceleration parameter (Pr. 01-44) 4. Set over-current stall prevention function (Pr. 06-03) 5. Replace the drive with a larger capacity model.
Short circuit at motor output due to poor insulation wiring	Check the motor cable and remove causes of the short circuits, or replace the cable before turning on the power.
Check for possible burnout or aging insulation of the motor	Check the motor insulation value with megger. Replace the motor if the insulation is poor.
The load is too large.	Check if the output current during the whole working process exceeds the AC motor drive's rated current. If yes, replace the AC motor drive with a larger capacity model.
Impulsive change of the load	Reduce the load or increase the capacity of AC motor drive.
Use special motor or motor with larger capacity than the drive	Check the motor capacity (the rated current on the motor's nameplate should ≦ the rated current of the drive)
Use ON/OFF controller of an electromagnetic contactor at the output (U/V/W) of the drive	Check the action timing of the contactor and make sure it is not turned ON/OFF when the drive outputs the voltage.
V/F curve setting fault	Adjust V/F curve setting and frequency/voltage. When the fault occurs, and the frequency voltage is too high, reduce the voltage.
Torque compensation is too large	Adjust the torque compensation (refer to Pr.07-26 torque compensation gain) until the output current reduces and the motor does not stall.
Malfunction caused by interference	Verify the wiring of the control circuit and wiring/grounding of the main circuit to prevent interference.
The motor starts when in free run	Enable the speed tracking during start-up of Pr. 07-12.
Improper parameter settings for the speed tracking function (including restart after momentary power loss and restart after fault)	Correct the parameter settings for speed tracking. 1. Start the speed tracking function. 2. Adjust the maximum current for Pr. 07-09 speed tracking.
Incorrect combination of control mode and used motor	Check the settings for Pr. 00-11 control mode: 1. For IM, Pr. 00-11=0, 1, 2, 3, 5 2. For PM, Pr. 00-11=4, 6, or 7
The length of motor cable is too long	Increase AC motor drive's capacity. Install AC reactor(s) on the output side (U/V/W).

Hardware failure	The ocA occurs due to short circuit or ground fault at the output side of the drive. Check for possible short circuits between terminals with the electric meter: B1 corresponds to U, V, W; DC- corresponds to U, V, W; ⏚ corresponds to U, V, W. If short circuit occur, return to the factory for repair.
Check if the setting for stall prevention is correct	Set the stall prevention to the proper value.

ID*	Display on LCD Keypad	Fault Name	Fault Descriptions
2	AUTO Fault ocd Oc at decel	Over-current during deceleration (ocd)	Output current exceeds 2.4 times of rated current during deceleration. When ocd occurs, the drive closes the gate of the output immediately, the motor runs freely, and the display shows an ocd fault.

Action and Reset	
Action level	240% of rated current
Action time	Act immediately
Fault treatment parameter	N/A
Reset method	Manual reset
Reset condition	Reset in 5 sec. after the fault is cleared
Record	Yes
Cause	**Corrective Actions**
Deceleration time too short	1. Increase the deceleration time 2. Increase the deceleration time of S-curve 3. Set auto-acceleration and auto-deceleration parameter (Pr. 01-44) 4. Set over-current stall prevention function (Pr. 06-03) 5. Replace the drive with a larger capacity model
Check if the mechanical brake of the motor activates too early	Check the action timing of the mechanical brake
Short-circuit at motor output due to poor insulation wiring	Check the motor cable and remove causes of the short circuits, or replace the cable before turning on the power.
Check for possible burnout or aging insulation of the motor	Check the motor insulation value with megger. Replace the motor if the insulation is poor.
The load is too large	Check if the output current during the whole working process exceeds the AC motor drive's rated current. If yes, replace the AC motor drive with a larger capacity model.
Impulsive change of the load	Reduce the load or increase the capacity of AC motor drive.
Use special motor or motor with larger capacity than the drive	Check the motor capacity (the rated current on the motor's nameplate should ≦ the rated current of the drive)
Use ON/OFF controller of an electromagnetic contactor at the output (U/V/W) of the drive	Check the action timing of the contactor and make sure it is not turned ON/OFF when the drive outputs the voltage.
V/F curve setting fault	Adjust V/F curve settings and frequency/voltage. When the fault occurs, and the frequency voltage is too high, reduce the voltage.
Torque compensation is too large	Adjust the torque compensation (refer to Pr.07-26 torque compensation gain) until the output current reduces and the motor does not stall.
Malfunction caused by interference	Verify the wiring of the control circuit and wiring/grounding of the main circuit to prevent interference.
The length of motor cable is too long	Increase AC motor drive's capacity Install AC reactor(s) on the output side (U/V/W)
Hardware fault	The ocd occurs due to short circuit or ground fault at the output side of the drive. Check for possible short circuits between terminals with the electric meter: B1 corresponds to U, V, W; DC- corresponds to U, V, W; ⏚ corresponds to U, V, W. If short circuits occur, return to the factory for repair.
Check if the setting of stall prevention is correct	Set the stall prevention to the proper value.

ID*	Display on LCD Keypad	Fault Name	Fault Descriptions
3	AUTO Fault ocn Oc at normal SPD	Over-current during steady operation (ocn)	Output current exceeds 2.4 times of the rated current during constant speed. When ocn occurs, the drive closes the gate of the output immediately, the motor runs freely, and the display shows an ocn fault.

Action and Reset	
Action level	240% of rated current
Action time	Act immediately
Fault treatment parameter	N/A
Reset method	Manual reset
Reset condition	Reset in 5 sec. after the fault is cleared
Record	Yes

Cause	Corrective Actions
Short-circuit at motor output due to poor insulation wiring	Check the motor cable and remove causes of the short circuits, or replace the cable before turning on the power.
Check for possible shaft lock, burnout or aging insulation of the motor	Troubleshoot the motor shaft lock. Check the motor insulation value with megger. Replace the motor if the insulation is poor.
Impulsive change of the load	Reduce the load or increase the capacity of AC motor drive.
Use special motor or motor with larger capacity than the drive	Check motor capacity (the rated current on the motor's nameplate should ≦ the rated current of the drive)
Use ON/OFF controller of an electromagnetic contactor at the output (U/V/W) of the drive	Check the action timing of the contactor and make sure it is not turned ON/OFF when the drive outputs the voltage.
V/F curve setting fault	Adjust V/F curve settings and frequency/voltage. When the fault occurs, and the frequency voltage is too high, reduce the voltage.
Over-torque offset value too high	Adjust over-torque offset value (Refer to Pr. 07-26 torque compensation gain), until the output current is reduced and not motor stall.
Torque compensation is too large.	Adjust the torque compensation (refer to Pr.07-26 torque compensation gain) until the output current reduces and the motor does not stall.
Malfunction caused by interference	Verify the wiring of the control circuit and wiring/grounding of the main circuit to prevent interference.
The length of motor cable is too long	Increase the AC motor drive's capacity. Install AC reactor(s) on the output side (U/V/W).
Hardware failure	The ocn occurs due to short circuit or ground fault at the output side of the drive. Check for possible short circuit between terminals with the electric meter: B1 corresponds to U, V, W; DC- corresponds to U, V, W; ⏚ corresponds to U, V, W. If short circuits occur, return to the factory for repair.

ID*	Display on LCD Keypad	Fault Name	Fault Descriptions
4	AUTO Fault GFF Ground fault	Ground fault (GFF)	When (one of) the output terminal(s) is grounded, short circuit current is larger than Pr. 06-60 setting value, and the detection time is longer than Pr. 06-61 time setting, GFF occurs. NOTE: the short circuit protection is provided for AC motor drive protection, not to protect the user.
Action and Reset			
Action level		Pr. 06-60 (Default = 60%)	
Action time		Pr. 06-61 (Default = 0.10 sec.)	
Fault treatment parameter		N/A	
Reset method		Manual reset	
Reset condition		Reset in 5 sec. after the fault is cleared	
Record		Yes	
Cause		Corrective Actions	
Motor burnout or aging insulation occurred		Check the motor insulation value with megger. Replace the motor if the insulation is poor.	
Short circuit due to broken cable		Troubleshoot the short circuit. Replace the cable.	
Larger stray capacitance of the cable and terminal ⏚		If the motor cable length exceeds 100m, decrease the setting value for carrier frequency. Take remedies to reduce stray capacitance.	
Malfunction caused by interference		Verify the grounding and wiring of the communication circuit. It is recommended to separate the communication circuit from the main circuit, or wire in 90 degree for effective sufficient anti-interference performance.	
Hardware failure		Cycle the power after checking the status of motor, cable and cable length. If GFF still occurs, return to the factory for repair.	

ID*	Display on LCD Keypad	Fault Name	Fault Descriptions
5	AUTO Fault OCC Short Circuit	IGBT short circuit between upper bridge and lower bridge (occ)	Short-circuit is detected between upper bridge and lower bridge of the IGBT module
Action and Reset			
Action level		Hardware protection	
Action time		Act immediately	
Fault treatment parameter		N/A	
Reset method		Manual reset	
Reset condition		Reset in 5 sec. after the fault is cleared	
Record		Yes	
Cause		Corrective Actions	
IGBT fault		Check the motor wiring.	
Short-circuit detecting circuit fault		Cycle the power, if occ still occurs, return to the factory for repair.	

ID*	Display on LCD Keypad	Fault Name	Fault Descriptions
6	AUTO Fault ocS Oc at stop	Over-current at stop (ocS)	Over-current or hardware failure in current detection at stop. Cycle the power after ocS occurs. If the hardware failure occurs, the display shows cd1, cd2 or cd3.

Action and Reset	
Action level	240% of rated current
Action time	Act immediately
Fault treatment parameter	N/A
Reset method	Manual reset
Reset condition	Reset in 5 sec. after the fault is cleared
Record	Yes
Cause	**Corrective Actions**
Malfunction caused by interference	Verify the wiring of the control circuit and wiring/grounding of the main circuit to prevent interference.
Hardware failure	Check if other fault code such as cd1–cd3 occur after cycling the power. If yes, return to the factory for repair.

ID*	Display on LCD Keypad	Fault Name	Fault Descriptions
7	AUTO Fault ovA Ov at accel	Over-voltage during acceleration (ovA)	DC bus over-voltage during acceleration. When ovA occurs, the drive closes the gate of the output, the motor runs freely, and the display shows an ovA fault.

Action and Reset	
Action level	230V series: 410V_{DC} 460V series: 820V_{DC} 575V series: 1116V_{DC} 690V series: 1318V_{DC}
Action time	Act immediately when DC bus voltage is higher than the level
Fault treatment parameter	N/A
Reset method	Manual reset
Reset condition	Reset only when DC bus voltage is lower than 90% of the over-voltage level
Record	Yes
Cause	**Corrective Actions**
Acceleration is too slow (e.g. hen lifting load decreases acceleration time)	Decrease the acceleration time Use brake unit or DC bus Replace the drive with a larger capacity model.
The setting for stall prevention level is smaller than no-load current	The setting for stall prevention level should be larger than no-load current
Power voltage is too high	Check if the input voltage is within the rated AC motor drive input voltage range, and check for possible voltage spikes.
ON/OFF switch action of phase-in capacitor in the same power system	If the phase-in capacitor or active power supply unit acts in the same power system, the input voltage may surge abnormally in a short time. In this case, install an AC reactor.
Regenerative voltage of motor inertia	Use over-voltage stall prevention function (Pr. 06-01) Use auto-acceleration and auto-deceleration setting (Pr. 01-44) Use a brake unit or DC bus
Acceleration time is too short	Check if the over-voltage warning occurs after acceleration stops. When the warning occurs, do the following: 1. Increase the acceleration time 2. Set Pr. 06-01 over-voltage stall prevention 3. Increase setting value for Pr. 01-25 S-curve acceleration arrival time 2
Motor ground fault	The ground short circuit current charges the capacitor in the main circuit through the power. Check if there is ground fault on the motor cable, wiring box and its internal terminals. Troubleshoot the ground fault.
Incorrect wiring of brake resistor or brake unit	Check the wiring of brake resistor and brake unit.
Malfunction caused by interference	Verify the wiring of the control circuit and wiring/grounding of the main circuit to prevent interference.

ID*	Display on LCD Keypad	Fault Name	Fault Descriptions
8	AUTO Fault ovd Ov at decel	Over-voltage during deceleration (ovd)	DC bus over-voltage during deceleration. When ovd occurs, the drive closes the gate of the output immediately, the motor runs freely, and the display shows an ovd fault.

Action and Reset	
Action level	230V series: 410V_{DC} 460V series: 820V_{DC} 575V series: 1116V_{DC} 690V series: 1318V_{DC}
Action time	Act immediately when DC bus voltage is higher than the level
Fault treatment parameter	N/A
Reset method	Manual reset
Reset condition	Reset only when DC bus voltage is lower than 90% of the over-voltage level
Record	Yes
Cause	**Corrective Actions**
Deceleration time is too short, causing too large regenerative energy of the load	1. Increase the setting value of Pr. 01-13, Pr. 01-15, Pr. 01-17 and Pr. 01-19 (deceleration time) 2. Connect brake resistor, brake unit or DC bus on the drive. 3. Reduce the brake frequency. 4. Replace the drive with a larger capacity model. 5. Use S-curve acceleration/deceleration. 6. Use over-voltage stall prevention (Pr. 06-01). 7. Use auto-acceleration and auto-deceleration (Pr. 01-44). 8. Adjust braking level (Pr. 07-01 or the bolt position of the brake unit).
The setting for stall prevention level is smaller than no-load current	The setting for stall prevention level should be larger than no-load current
Power voltage is too high	Check if the input voltage is within the rated AC motor drive input voltage range, and check for possible voltage spikes.
ON/OFF switch action of phase-in capacitor in the same power system	If the phase-in capacitor or active power supply unit acts in the same power system, the input voltage may surge abnormally in a short time. In this case, install an AC reactor.
Motor ground fault	The ground short circuit current charges the capacitor in the main circuit through the power. Check if there is ground fault on the motor cable, wiring box and its internal terminals. Troubleshoot the ground fault.
Incorrect wiring of brake resistor or brake unit	Check the wiring of brake resistor or brake unit.
Malfunction caused by interference	Verify the wiring of the control circuit and wiring/grounding of the main circuit to prevent interference.

ID*	Display on LCD Keypad	Fault Name	Fault Descriptions
9	AUTO Fault ovn Ov at normal SPD	Over-voltage at constant speed (ovn)	DC bus over-voltage at constant speed. When ovn occurs, the drive closes the gate of the output immediately, the motor runs freely, and the display shows an ovn fault.

Action and Reset	
Action level	230V series: 410V_{DC} 460V series: 820V_{DC} 575V series: 1116V_{DC} 690V series: 1318V_{DC}
Action time	Act immediately when DC bus voltage is higher than the level
Fault treatment parameter	N/A
Reset method	Manual reset
Reset condition	Reset only when DC bus voltage is lower than 90% of over-voltage level
Record	Yes
Cause	Corrective Actions
Impulsive change of the load	1. Connect brake resistor, brake unit or DC bus to the drive. 2. Reduce the load. 3. Replace to drive with a larger capacity model. 4. Adjust braking level (Pr. 07-01 or bolt position of the brake unit).
The setting for stall prevention level is smaller than no-load current	The setting of stall prevention level should be larger than no-load current
Regenerative voltage of motor inertia	Use over-voltage stall prevention function (Pr. 06-01) Use a brake unit or DC bus
Power voltage is too high	Check if the input voltage is within the rated AC motor drive input voltage range, and check for possible voltage spikes.
ON/OFF switch action of phase-in capacitor in the same power system	If the phase-in capacitor or active power supply unit acts in the same power system, the input voltage may surge abnormally in a short time. In this case, install an AC reactor.
Motor ground fault	The ground short-circuit current charges the capacitor in the main circuit through the power. Check if there is ground fault on the motor cable, wiring box and its internal terminals. Troubleshoot the ground fault.
Incorrect wiring of brake resistor or brake unit	Check the wiring of brake resistor or brake unit.
Malfunction caused by interference	Verify the wiring of the control circuit and wiring/grounding of the main circuit to prevent interference.

ID*	Display on LCD Keypad	Fault Name	Fault Descriptions
10	AUTO Fault ovS Ov at stop	Over-voltage at stop (ovS)	Over-voltage at stop
Action and Reset			
Action level		230V series: 410V_{DC} 460V series: 820V_{DC} 575V series: 1116V_{DC} 690V series: 1318V_{DC}	
Action time		Act immediately when DC bus voltage is higher than the level	
Fault treatment parameter		N/A	
Reset method		Manual reset	
Reset condition		Reset only when DC bus voltage is lower than 90% of over-voltage level	
Record		Yes	
Cause		Corrective Actions	
Power voltage is too high		Check if the input voltage is within the rated AC motor drive input voltage range, and check for possible voltage spikes.	
ON/OFF switch action of phase-in capacitor in the same power system		If the phase-in capacitor or active power supply unit activates in the same power system, the input voltage may surge abnormally in a short time. In this case, install an AC reactor.	
Incorrect wiring of brake resistor or brake unit		Check the wiring of brake resistor or brake unit.	
Malfunction caused by interference		Verify the wiring of the control circuit and wiring/grounding of the main circuit to prevent interference.	
Hardware failure in voltage detection		Check if other fault code such as cd1–cd3 occur after cycling the power. If yes, return to the factory for repair.	
Motor ground fault		The ground short circuit current charges the capacitor in the main circuit through the power. Check if there is ground fault on the motor cable, wiring box and its internal terminals. Troubleshoot the ground fault.	

ID*	Display on LCD Keypad	Fault Name	Fault Descriptions
11	AUTO Fault LvA Lv at accel	Low-voltage during acceleration (LvA)	DC bus voltage is lower than Pr. 06-00 setting value during acceleration
Action and Reset			
Action level		Pr. 06-00 (Default = depending on the model)	
Action time		Act immediately when DC bus voltage is lower than Pr. 06-00	
Fault treatment parameter		N/A	
Reset method		Manual reset	
Reset condition		Reset when DC bus voltage is higher than Pr. 06-00 + 30V (Frame A–D) / 40V (Frame E and below)	
Record		Yes	
Cause		Corrective Actions	
Power-off		Improve power supply condition.	
Power voltage changes		Adjust voltage to the power range of the drive	
Start up the motor with large capacity		Check the power system. Increase the capacity of power equipment.	
The load is too large		Reduce the load. Increase the drive capacity. Increase the acceleration time.	
DC bus		Install DC reactor(s).	
Check if there is short-circuit plate or any DC reactor installed between terminal +1 and +2		Connect short circuit plate or DC reactor between terminal +1 and +2. If the fault still occurs, return to the factory for repair.	

ID*	Display on LCD Keypad	Fault Name	Fault Descriptions
12	AUTO Fault Lvd Lv at decel	Low-voltage during deceleration (Lvd)	DC bus voltage is lower than Pr. 06-00 setting value during deceleration
Action and Reset			
Action level		Pr. 06-00 (Default = depending on the model)	
Action time		Act immediately when DC bus voltage is lower than Pr. 06-00	
Fault treatment parameter		NA	
Reset method		Manual reset	
Reset condition		Reset when DC bus voltage is higher than Pr. 06-00 + 30V (Frame A–D) / 40V (Frame E and above)	
Record		Yes	
Cause		Corrective Actions	
Power-off		Improve power supply condition.	
Power voltage changes		Adjust voltage to the power range of the drive.	
Start up the motor with large capacity		Check the power system. Increase the capacity of power equipment.	
Sudden load		Reduce the load. Increase the drive capacity.	
DC bus		Install DC reactor(s).	

ID*	Display on LCD Keypad	Fault Name	Fault Descriptions
13	AUTO Fault Lvn Lv at normal SPD	Low-voltage at constant speed (Lvn)	DC bus voltage is lower than Pr. 06-00 setting value at constant speed
Action and Reset			
Action level		Pr. 06-00 (Default = depending on the model)	
Action time		Act immediately when DC bus voltage is lower than Pr. 06-00	
Fault treatment parameter		NA	
Reset method		Manual reset	
Reset condition		Reset when DC bus voltage is higher than Pr. 06-00 + 30V (Frame A–D) / 40V (Frame E and above)	
Record		Yes	
Cause		Corrective Actions	
Power-off		Improve power supply condition.	
Power voltage changes		Adjust voltage to the power range of the drive	
Start up the motor with large capacity		Check the power system. Increase the capacity of power equipment.	
Sudden load		Reduce the load. Increase the drive capacity.	
DC bus		Install DC reactor(s).	

ID*	Display on LCD Keypad	Fault Name	Fault Descriptions
14	AUTO Fault LvS Lv at stop	Low-voltage at stop (LvS)	1. DC bus voltage is lower than Pr. 06-00 setting value at stop 2. Hardware failure in voltage detection
Action and Reset			
Action level		Pr. 06-00 (Default = depending on the model)	
Action time		Act immediately when DC bus voltage is lower than Pr. 06-00	
Fault treatment parameter		N/A	
Reset method		Manual/ auto 230V series: Frame A–D = Lv level + 30V_{DC} + 500ms Frame E and above = Lv level + 40V_{DC} + 500ms 460V series: Frame A–D = Lv level + 60V_{DC} + 500ms Frame E and above = Lv level + 80V_{DC} + 500ms 575V series: Frame A–D = Pr. 06-00 + 100.0V_{DC} Frame E and above = Pr. 06-00 + 120.0V_{DC} 690V series: Frame A–D = Pr. 06-00 + 100.0V_{DC} Frame E and above = Pr. 06-00 + 100.0V_{DC}	
Reset condition		500ms	
Record		Yes	
Cause		Corrective Actions	
Power-off		Improve power supply condition.	
Incorrect drive models		Check if the power specification matches the drive.	
Power voltage changes		Adjust voltage to the power range of the drive. Cycle the power after checking the power. If LvS fault still occurs, return to the factory for repair.	
Start up the motor with large capacity		Check the power system. Increase the capacity of power equipment.	
DC bus		Install DC reactor(s).	

ID*	Display on LCD Keypad	Fault Name	Fault Descriptions
15	AUTO Fault OrP Phase lacked	Phase loss protection (OrP)	Phase loss of power input
Action and Reset			
Action level		DC bus is lower than Pr. 07-00, and DC bus ripple is higher than Pr. 06-52	
Action time		N/A	
Fault treatment parameter		Pr. 06-53	
Reset method		Manual reset	
Reset condition		Reset immediately when DC bus is higher than Pr. 07-00	
Record		Yes	
Cause		Corrective Actions	
Phase loss of input power		Correctly install the wiring of the main circuit power.	
Single phase power input to three-phase model		Choose the model whose power matches the voltage.	
Power voltage changes		If the main circuit power works normally, verify the main circuit. Cycle the power after checking the power, if OrP fault still occurs, return to the factory for repair.	
Loose wiring terminal of input power		Tighten the terminal screws according to the torque described in the user manual.	
The input cable of three-phase power is cut off		Wire correctly. Replace the cut off cable.	
Input power voltage changes too much		Verify the setting value for Pr. 06-50 Time for Input Phase Loss Detection and Pr. 06-52 Ripple of Input Phase Loss	
Unbalanced three-phase of input power		Check the power three-phase status.	

ID*	Display on LCD Keypad	Fault Name	Fault Descriptions
16	AUTO Fault oH1 IGBT over heat	IGBT overheating (oH1)	IGBT temperature exceeds the protection level
Action and Reset			
Action level		When Pr.06-15 is higher than the IGBT overheating protection level, oH1 fault occurs instead of oH1 warning.	
Action time		IGBT temperature exceeds the protection level for more than 100ms, oH1 fault occurs.	
Fault treatment parameter		N/A	
Reset method		Manual reset	
Reset condition		Reset only when IGBT temperature is lower than oH1 fault level minus (-) 10°C	
Record		Yes	
Cause		Corrective Actions	
Check if the ambient temperature or temperature inside the control cabinet is too high, or if there is obstruction in the ventilation hole of the control cabinet.		1. Check ambient temperature. 2. Regularly inspect the ventilation hole of the control cabinet. 3. Change the installed place if there are heating objects, such as braking resistors, in the surroundings. 4. Install/ add cooling fan or air conditioner to lower the temperature inside the cabinet.	
Check if there is any obstruction on the heat sink or if the fan is running.		Remove the obstruction or replace the cooling fan.	
Insufficient ventilation space		Increase ventilation space of the drive.	
Check if the drive matches the corresponding load		1. Reduce the load 2. Reduce the carrier 3. Replace the drive with a larger capacity model.	
The drive has run 100% or more than 100% of the rated output for a long time		Replace the drive with a larger capacity model.	

ID*	Display on LCD Keypad	Fault Name	Fault Descriptions
17	AUTO Fault oH2 Heat Sink oH	Over-heat key components (oH2)	The drive has detected the key components are over heat

Action and Reset	
Action level	Refer to the table below for oH2 level of each models
Action time	The oH2 fault occurs when the temperature sensor of key components detects the temperature is higher than the protection level for 100ms.
Fault treatment parameter	N/A
Reset method	Manual reset
Reset condition	The drive auto-resets when the temperature sensor of key components detects the temperature is lower than oH2 error level minus (–) 10°C
Record	Yes
Cause	**Corrective Actions**
Check if the ambient temperature or temperature inside the control cabinet is too high, or if there is obstruction in the ventilation hole of the control cabinet.	1. Check ambient temperature. 2. Regularly inspect the ventilation hole of the control cabinet. 3. Change the installed place if there are heating objects, such as braking resistors, in the surroundings. 4. Install/ add cooling fan or air conditioner to lower the temperature inside the cabinet.
Check if there is any obstruction on the heat sink or if the fan is running.	Remove the obstruction or replace the cooling fan.
Insufficient ventilation space	Increase ventilation space of the drive.
Check if the drive matches the corresponding load	1. Reduce the load 2. Reduce the carrier 3. Replace the drive with a larger capacity model.
The drive has run 100% or more than 100% of the rated output for a long time	Replace the drive with a larger capacity model.
Unstable power	Install reactor(s)
Load changes frequently	Reduce load changes

oH1/ oH2 warning level

Model	oH1	oH2	oH warning oH1 warning = (Pr.06-15)
VFD007C23A-21	110	95	oH1 Warning = oH1 – 5 oH2 Warning = oH2 – 5
VFD015C23A-21			
VFD022C23A-21			
VFD037C23A-21		100	
VFD055C23A-21		80	
VFD075C23A-21			
VFD110C23A-21			
VFD150C23A-21		75	
VFD185C23A-21			
VFD220C23A-21			
VFD300C23A-00 / VFD300C23A-21		65	
VFD370C23A-00 / VFD370C23A-21			
VFD450C23A-00 / VFD450C23A-21			
VFD550C23A-00 / VFD550C23A-21			
VFD750C23A-00 / VFD750C23A-21			
VFD900C23A-00 / VFD900C23A-21			
VFD007C43A-21 / VFD007C4EA-21	110	95	oH1 Warning = oH1 – 5 oH2 Warning = oH2 – 5
VFD015C43A-21 / VFD015C4EA-21			
VFD022C43A-21 / VFD022C4EA-21		100	
VFD037C43A-21 / VFD037C4EA-21	110	105	
VFD040C43A-21 / VFD040C4EA-21		100	oH1 Warning = oH1 – 5

Model	oH1	oH2	oH warning oH1 warning = (Pr.06-15)
VFD055C43A-21 / VFD055C4EA-21			oH2 Warning = oH2 – 5
VFD075C43A-21 / VFD075C4EA-21		80	
VFD110C43A-21 / VFD110C4EA-21			
VFD150C43A-21 / VFD150C4EA-21			
VFD185C43A-21 / VFD185C4EA-21		85	
VFD220C43A-21 / VFD220C4EA-21			
VFD300C43A-21 / VFD300C4EA-21			
VFD370C43S-00 / VFD370C43S-21		65	
VFD450C43S-00 / VFD450C43S-21			
VFD550C43A-00 / VFD550C43A-21			
VFD750C43A-00 / VFD750C43A-21			
VFD900C43A-00 / VFD900C43A-21			
VFD1100C43A-00 / VFD1100C43A-21			
VFD1320C43A-00 / VFD1320C43A-21			
VFD1600C43A-00 / VFD1600C43A-21			
VFD1850C43A-00 / VFD1850C43A-21		70	
VFD2200C43A-00 / VFD2200C43A-21			
VFD2800C43A-00 / VFD2800C43C-21			
VFD3150C43A-00 / VFD3150C43C-21			
VFD3550C43A-00 / VFD3550C43C-21			
VFD4500C43A-00 / VFD4500C43C-21			
VFD5000C43A-00 / VFD5000C43C-21	Contact Delta		
VFD5600C43A-00 / VFD5600C43C-21	Contact Delta		
VFD015C53A-21	100	85	oH1 Warning = oH1 – 5 oH2 Warning = oH2 – 5
VFD022C53A-21	105		
VFD037C53A-21	100		
VFD055C53A-21		70	
VFD075C53A-21			
VFD110C53A-21			
VFD150C53A-21			
VFD185C63B-21	90	85	oH1 Warning = oH1 – 5 oH2 Warning = oH2 – 5
VFD220C63B-21			
VFD300C63B-21			
VFD370C63B-21			
VFD450C63B-00 / VFD450C63B-21	100	65	
VFD550C63B-00 / VFD550C63B-21			
VFD750C63B-00 / VFD750C63B-21	110		
VFD900C63B-00 / VFD900C63B-21			
VFD1100C63B-00 / VFD1100C63B-21			
VFD1320C63B-00 / VFD1320C63B-21			
VFD1600C63B-00 / VFD1600C63B-21			
VFD2000C63B-00 / VFD2000C63B-21			
VFD2500C63B-00 / VFD2500C63B-21		70	
VFD3150C63B-00 / VFD3150C63B-21			
VFD4000C63B-00 / VFD4000C63B-21			
VFD4500C63B-00 / VFD4500C63B-21			
VFD5600C63B-00 / VFD5600C63B-21			
VFD6300C63B-00 / VFD6300C63B-21			

ID*	Display on LCD Keypad	Fault Name	Fault Descriptions
18	AUTO Fault tH1o Thermo 1 open	IGBT temperature detection failure (tH1o)	IGBT hardware failure in temperature detection
Action and Reset			
Action level		NTC broken or wiring failure	
Action time		When the IGBT temperature is higher than the protection level, and detection time exceeds 100ms, the tH1o protection occurs.	
Fault treatment parameter		N/A	
Reset method		Manual reset	
Reset condition		Reset immediately	
Record		Yes	
Cause		Corrective Actions	
Hardware failure		Wait for 10 minutes, and then cycle the power. Check if tH1o protection still occurs. If yes, return to the factory for repair.	

ID*	Display on LCD Keypad	Fault Name	Fault Descriptions
19	AUTO Fault tH2o Thermo 2 open	Capacitor hardware fault (tH2o)	Hardware failure in capacitor temperature detection
Action and Reset			
Action level		NTC broken or wiring failure	
Action time		When the IGBT temperature is higher than the protection level, and detection time exceeds 100ms, the tH2o protection occurs.	
Fault treatment parameter		N/A	
Reset method		Manual reset	
Reset condition		Reset immediately	
Record		Yes	
Cause		Corrective Actions	
Hardware failure		Wait for 10 minutes, and then cycle the power. Check if tH2o protection still occurs. If yes, return to the factory for repair.	

ID*	Display on LCD Keypad	Fault Name	Fault Descriptions
21	AUTO Fault oL Over load	Over load (oL)	The AC motor drive detects excessive drive output current. The overload capacity sustains for 1 minute when the drive outputs 120% of the drive's rated output current.

Action and Reset	
Action level	Based on over load curve and derating curve.
Action time	When the load is higher than the protection level and exceeds allowable time, the oL protection occurs.
Fault treatment parameter	N/A
Reset method	Manual reset
Reset condition	Reset in 5 sec. after the fault is cleared
Record	Yes
Cause	**Corrective Actions**
The load is too large	Reduce the load
Accel./Decel. time or the working cycle are too short	Increase the setting value for Pr. 01-12–01-19 (accel./decel time)
V/F voltage is too high	Adjust the settings for Pr.01-01–01-08 (V/F curve), especially the setting value for the mid-point voltage (if the mid-point voltage is set too low, the load capacity decreases at low speed). Refer to the V/F curve selection of Pr.01-43.
The capacity of the drive is too small	Replace the drive with a larger capacity model.
Overload during low-speed operation	Reduce the load during low-speed operation. Increase the drive capacity. Decrease the carrier frequency of Pr. 00-17.
Torque compensation is too large	Adjust the torque compensation (refer to Pr. 07-26 Torque Compensation Gain) until the output current reduces and the motor does not stall.
Check if the setting for stall prevention is correct.	Set the stall prevention to the proper value.
Output phase loss	Check the status of three-phase motor. Check if the cable is broken or the screws are loose.
Improper parameter settings for the speed tracking function (including restart after momentary power loss and restart after fault)	Correct the parameter settings for speed tracking. 1. Start the speed tracking function. 2. Adjust the maximum current for Pr.07-09 speed tracking.

ID*	Display on LCD Keypad	Fault Name	Fault Descriptions
22	AUTO Fault EoL1 Thermal relay 1	Electronics thermal relay 1 protection (EoL1)	Electronics thermal relay 1 protection. The drive coasts to stop once this fault occurs.

Action and Reset	
Action level	Start counting when output current > 105% of motor 1 rated current
Action time	Pr. 06-14 (if the output current is larger than 105% of motor 1 rated current again within 60 sec., the counting time reduces and is less than Pr. 06-14)
Fault treatment parameter	N/A
Reset method	Manual reset
Reset condition	Reset in 5 sec. after the fault is cleared
Record	Yes
Cause	Corrective Actions
The load is too large	Reduce the load.
Accel./Decel. time or the working cycle is too short	Increase the setting values for Pr. 01-12–01-19 (Accel./Decel time)
V/F voltage is too high	Adjust the settings for Pr.01-01–01-08 (V/F curve), especially the setting value for the mid-point voltage (if the mid-point voltage is set too low, the load capacity decreases at low speed). Refer to the V/F curve selection of Pr.01-43.
Overload during low-speed operation. When using a general motor, even it operates below rated current, an overload may still occur during low-speed operation.	Decrease low-speed operation time. Replace the drive with a dedicated to VFD model. Increase the motor capacity.
When using VFD dedicated motors, Pr. 06-13=0 (electronic thermal relay selection motor 1 = inverter motor)	Pr. 06-13=1 electronic thermal relay selection motor 1 = standard motor (motor with fan on the shaft).
Incorrect value of electronic thermal relay	Reset to the correct motor rated current.
The maximum motor frequency is set too low	Reset to the correct motor rated frequency.
One drive to multiple motors	Set Pr. 06-13=2 electronic thermal relay selection motor 1= disable, and install thermal relay on each motor.
Check if the setting for stall prevention is correct.	Set the stall prevention to the proper value.
Torque compensation is too large	Adjust the torque compensation (refer to Pr.07-26 torque compensation gain) until the current reduces and the motor does no stall.
Motor fan fault	Check the status of the fan, or replace the fan.
Unbalanced three-phase impedance of the motor	Replace the motor.

ID*	Display on LCD Keypad	Fault Name	Fault Descriptions
23	AUTO Fault EoL2 Thermal relay 2	Electronic thermal relay 2 protection (EoL2)	Electronic thermal relay 2 protection. The drive coasts to stop once this fault occurs.

Action and Reset	
Action level	Start counting when output current > 105% of motor 2 rated current
Action time	Pr. 06-28 (If the output current is larger than 105% of motor 2 rated current again within 60 sec., the counting time reduces and is less than Pr. 06-28)
Fault treatment parameter	N/A
Reset method	Manual reset
Reset condition	Reset in 5 sec. after the fault is cleared
Record	Yes

Cause	Corrective Actions
The load is too large	Reduce the load
Accel./Decel. time or the working cycle are too short	Increase the setting values for Pr.01-12–01-19 (accel./decel. time)
V/F voltage is too high	Adjust the settings for Pr.01-01–01-08 (V/F curve), especially the setting value for the mid-point voltage (if the mid-point voltage is set too low, the load capacity decreases at low speed). Refer to the V/F curve selection setting of Pr.01-43.
Overload during low-speed operation. When using general motor, even it operates below rated current, an overload may still occur during low-speed operation.	Decrease low-speed operation time. Replace the drive with a dedicated to VFD model. Increase the motor capacity.
When using VFD dedicated motors, Pr. 06-27=0 (electronic thermal relay selection motor 2 = 0 inverter motor)	Pr. 06-27=1 Electronic thermal relay selection motor 2 = standard motor (motor with fan on the shaft).
Incorrect value of electronic thermal relay	Reset to the correct motor rated current.
The maximum motor frequency is set too low	Reset to the correct motor rated frequency.
One drive to multiple motors	Set Pr. 06-27=2 Electronic thermal relay selection motor 2 = disable, and install thermal relay on each motor.
Check if the setting for stall prevention is correct.	Set the stall prevention to the proper value.
Torque compensation is too large	Adjust the torque compensation (refer to Pr.07-26 torque compensation gain) until the current reduces and the motor does no stall.
Motor fan fault	Check the status of the fan, or replace the fan.
Unbalanced three-phase impedance of the motor	Replace the motor.

ID*	Display on LCD Keypad	Fault Name	Fault Descriptions
24_1	AUTO Fault oH3 Motor over heat	Motor overheating (oH3) PTC	Motor overheating (PTC) (Pr. 03-00 – Pr. 03-02=6 PTC), when PTC input > Pr. 06-30, the fault treatment acts according to Pr. 06-29.

Action and Reset	
Action level	PTC input value > Pr. 06-30 setting (Default = 50%)
Action time	Act immediately
Fault treatment parameter	Pr. 06-29 0: Warn and keep operation 1: Fault and ramp to stop 2: Fault and coast to stop 3: No warning
Reset method	When Pr. 06-29=0, oH3 is a “Warning”. The “Warning” is automatically cleared. When Pr. 06-29=1 or 2, oH3 is a “Fault”. You must reset manually.
Reset condition	Reset immediately
Record	When Pr. 06-29=1 or 2, oH3 is a “Fault”, and the fault is recorded.

Cause	Corrective Actions
Motor shaft lock	Remove the shaft lock.
The load is too large	Reduce the load. Increase the motor capacity.
Ambient temperature is too high	Change the installed place if there are heating devices in the surroundings. Install/ add cooling fan or air conditioner to lower the ambient temperature.
Motor cooling system fault	Check the cooling system to make it work normally.
Motor fan fault	Replace the fan.
Operate at low-speed too long.	Decrease low-speed operation time. Replace the motor with a dedicated to VFD model. Increase the motor capacity.
Accel./Decel. time and working cycle are too short	Increase the setting values for Pr. 01-12–01-19 (accel./decel. time)
V/F voltage is too high	Adjust settings for Pr.01-01–01-08 (V/F curve), especially the setting value for the mid-point voltage (if the mid-point voltage is set too low, the load capacity decreases at low speed).
Check if the motor rated current matches that on the motor nameplate.	Reset to the correct motor rated current.
Check if the PTC is properly set and wired.	Check the connection between PTC thermistor and the heat protection.
Check if the setting for stall prevention is correct.	Set the stall prevention to the proper value.
Unbalanced three-phase impedance of the motor	Replace the motor.
Harmonics are too high.	Use remedies to reduce harmonics.

ID*	Display on LCD Keypad	Fault Name	Fault Descriptions
24_2	AUTO Fault oH3 Motor over heat	Motor overheating (oH3) PT100	Motor overheating (PT100) (Pr. 03-00 – Pr. 03-02=11 PT100). When PT100 input > Pr. 06-57 (default = 7V), the fault treatment acts according to Pr. 06-29.

Action and Reset	
Action level	PT100 input value > Pr. 06-57 setting (default = 7V)
Action time	Act immediately
Fault treatment parameter	Pr. 06-29 0: Warn and keep operation 1: Fault and ramp to stop 2: Fault and coast to stop 3: No warning
Reset method	When Pr. 06-29=0 and the temperature < Pr. 06-56, oH3 is automatically cleared. When Pr. 06-29=1 or 2, oH3 is a “Fault”. You must reset manually.
Reset condition	Reset immediately
Record	When Pr. 06-29=1 or 2, oH3 is a “Fault”, and the fault is recorded.
Cause	**Corrective Actions**
Motor shaft lock	Remove the shaft lock.
The load is too large	Reduce the load. Increase the motor capacity.
Ambient temperature is too high	Change the installed place If there are heating devices in the surroundings. Install/ add cooling fan or air conditioner to lower the ambient temperature.
Motor cooling system fault	Check the cooling system to make it work normally.
Motor fan fault	Replace the fan.
Operate at low-speed too long	Decrease low-speed operation time. Replace the motor with a dedicated to VFD model. Increase the motor capacity.
Accel./Decel. time and working cycle are too short	Increase the setting values for Pr. 01-12–Pr.01-19 (accel./decel. time)
V/F voltage is too high	Adjust settings for Pr.01-01–01-08 (V/F curve), especially the setting value for the mid-point voltage (if the mid-point voltage is set too low, the load capacity decreases at low speed).
Check if the motor rated current matches that on the motor nameplate.	Reset to the correct motor rated current.
Check if the PT100 is properly set and wired.	Check connection of PT100 thermistor.
Check if the setting for stall prevention is correct.	Set the stall prevention to the proper value.
Unbalanced three-phase impedance of the motor	Replace the motor.
Harmonics are too high	Use remedies to reduce harmonics.

ID*	Display on LCD Keypad	Fault Name	Fault Descriptions
26	AUTO Fault ot1 Over torque 1	Over torque 1 (ot1)	When output current exceeds the over-torque detection level (Pr.06-07) and exceeds over-torque detection time (Pr.06-08), and when Pr.06-06 or Pr.06-09 is set to 2 or 4, the ot1 fault displays.

Action and Reset		
Action level	Pr. 06-07	
Action time	Pr. 06-08	
Fault treatment parameter	Pr. 06-06 0: No function 1: Continue operation after Over-torque detection during constant speed operation 2: Stop after Over-torque detection during constant speed operation 3: Continue operation after Over-torque detection during RUN 4: Stop after Over-torque detection during RUN	
Reset method Reset condition	Auto	When Pr. 06-06=1 or 3, ot1 is a “Warning”. The warning is automatically cleared when the output current < (Pr. 06-07 – 5%)
	Manual	When Pr. 06-06=2 or 4, ot1 is a “Fault”. You must reset manually.
Record	Reset immediately	
Active level	When Pr. 06-06=2 or 4, ot1 is a “Fault”, and the fault is recorded.	

Cause	Corrective Actions
Incorrect parameter setting	Reset Pr. 06-07 and Pr. 06-08
Mechanical failure (e.g. over-torque, mechanical lock)	Remove the causes of malfunction.
The load is too large	Reduce the load. Replace the motor with a larger capacity model.
Accel./Decel. time and working cycle are too short	Increase the setting values for Pr. 01-12–Pr. 01-19 (accel./decel. time)
V/F voltage is too high	Decrease the setting values for Pr.01-01–01-08 (V/F curve), especially the setting value for the mid-point voltage (if the mid-point voltage is set too low, the load capacity decreases at low speed).
The motor capacity is too small	Replace the motor with a larger capacity model.
Overload during low-speed operation	Decrease low-speed operation time. Increase the motor capacity.
Torque compensation is too large	Adjust the torque compensation (refer to Pr.07-26 torque compensation gain) until the current reduces and the motor does no stall.
Improper parameter settings for speed tracking function (including restart after momentary power loss and restart after fault)	Correct the parameter settings for speed tracking. 1. Start the speed tracking function. 2. Adjust the maximum current for Pr.07-09 speed tracking.

ID*	Display on LCD Keypad	Fault Name	Fault Descriptions
27	AUTO Fault ot2 Over torque 2	Over torque 2 (ot2)	When output current exceeds the over-torque detection level (Pr.06-10) and exceeds over-torque detection time (Pr.06-11), and when Pr.06-09 is set to 2 or 4, the ot2 fault displays.

Action and Reset		
Action level	Pr. 06-10	
Action time	Pr. 06-11	
Fault treatment parameter	Pr. 06-09 0: No function 1: Continue operation after Over-torque detection during constant speed operation 2: Stop after Over-torque detection during constant speed operation 3: Continue operation after Over-torque detection during RUN 4: Stop after Over-torque detection during RUN	
Reset method Reset condition	Auto	When Pr. 06-09=1 or 3, ot2 is a “Warning”. The warning is automatically cleared when the output current < (Pr. 06-10 – 5%).
	Manual	When Pr. 06-09=2 or 4, ot2 is a “Fault”. You must reset manually.
Record	Reset immediately	
Active level	When Pr. 06-09=2 or 4, ot2 is a “Fault”, and the fault is recorded.	

Cause	Corrective Actions
Incorrect parameter setting	Reset Pr. 06-07 and Pr. 06-08
Mechanical failure (e.g. over-torque, mechanical lock)	Remove the causes of malfunction.
The load is too large.	Reduce the load. Replace the motor with a larger capacity model.
Accel./Decel. time and working cycle are too short	Increase the setting values for Pr.01-12–01-19 (accel./decel. time).
V/F voltage is too high	Adjust the settings for Pr.01-01–01-08 (V/F curve), especially the setting value for the mid-point voltage (if the mid-point voltage is set too low, the load capacity decreases at low speed).
The motor capacity is too small	Replace the motor with a larger capacity model.
Overload during low-speed operation	Decrease low-speed operation time. Increase the motor capacity.
Torque compensation is too large	Adjust the torque compensation (refer to Pr.07-26 torque compensation gain) until the current reduces and the motor does no stall.
Improper parameter settings for speed tracking function (including restart at momentary power loss and restart after fault)	Correct the parameter settings for speed tracking. 1. Start the speed tracking function. 2. Adjust the maximum current for Pr.07-09 speed tracking.

ID*	Display on LCD Keypad	Fault Name	Fault Descriptions
28	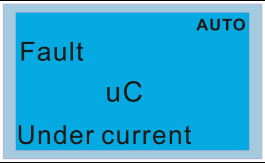	Under current (uC)	Low current detection
Action and Reset			
Action level	Pr. 06-71		
Action time	Pr. 06-72		
Fault treatment parameter	Pr. 06-73 0: No function 1: Fault and coast to stop 2: Fault and ramp to stop by 2nd deceleration time 3: Warn and operation continue		
Reset method Reset condition	Auto	When Pr. 06-73=3, uC is a “Warning”. The warning is automatically cleared when the output current > (Pr. 06-71+0.1A).	
	Manual	When Pr. 06-73=1 or 2, uC is a “Fault”. You must reset manually.	
Record	Reset immediately		
Active level	When Pr. 06-71=1 or 2, uC is a “Fault”, and the fault is recorded.		
Cause	Corrective Actions		
Motor cable disconnection	Troubleshoot the connection between the motor and the load.		
Improper setting of low-current protection	Reset Pr. 06-71, Pr. 06-72 and Pr. 06-73 to proper settings.		
The load is too low	Check the load status. Check if the motor capacity matches the load.		

ID*	Display on LCD Keypad	Fault Name	Fault Descriptions
29	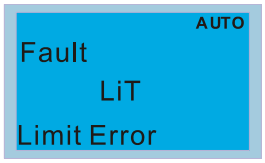	Limit Error (LiT)	This code occurs when the motor drive is running under speed mode (not IMFOCPG/PMFOCPG) and the negative running limit or the positive running limit of the MI terminals is enabled.
Action and Reset			
Action level	When under the speed mode (not FOCPG), negative running limit or positive running limit is enabled.		
Action time	Act immediately		
Fault treatment parameter	N/A		
Reset method	Move the motor away from the limit position, press the STOP/ RESET button on the keypad (Manual reset).		
Reset condition	Reset immediately		
Record	Yes		
Cause	Corrective Actions		
The limit ON/OFF switch may be on the wrong position	Install the limit ON/OFF switch to correct position.		
MI terminal may not be working properly.	Set Pr00-04=16 to verify if the MI terminals work properly. 16: The digital input status (ON / OFF) (i)		
Deceleration time may be too long, causing the motor cannot stop at limit position	Reduce deceleration time. Adjust setting value of DC brake current level (Pr.07-01 or the insert position on the brake unit).		

ID*	Display on LCD Keypad	Fault Name	Fault Descriptions
30	AUTO Fault cF1 EEPROM write err	EEPROM write error (cF1)	Internal EEPROM cannot be programmed
Action and Reset			
Action level		Firmware internal detection	
Action time		cF1 acts immediately when the drive detects the fault.	
Fault treatment parameter		N/A	
Reset method		Manual reset	
Reset condition		Reset immediately	
Record		Yes	
Cause		Corrective Actions	
Internal EEPROM cannot be programmed		Press “RESET” key or reset the parameter to the default setting, if cF1 still occurs, return to the factory for repair. Cycle the power, if cF1 still occurs, return to the factory for repair.	

ID*	Display on LCD Keypad	Fault Name	Fault Descriptions
31	AUTO Fault cF2 EEPROM read err	EEPROM read error (cF2)	Internal EEPROM cannot be read
Action and Reset			
Action level		Firmware internal detection	
Action time		cF2 acts immediately when the drive detects the fault	
Fault treatment parameter		N/A	
Reset method		Manual reset	
Reset condition		Reset immediately	
Record		Yes	
Cause		Corrective Actions	
Internal EEPROM cannot be read		Press “RESET” key or reset the parameter to the default setting, if cF2 still occurs, return to the factory for repair. Cycle the power, if cF2 error still occurs, return to the factory for repair.	

ID*	Display on LCD Keypad	Fault Name	Fault Descriptions
33	AUTO Fault cd1 Ias sensor err	U-phase error (cd1)	U-phase current detection error when power is ON
Action and Reset			
Action level		Hardware detection	
Action time		cd1 acts immediately when the drive detects the fault	
Fault treatment parameter		N/A	
Reset method		Power-off	
Reset condition		N/A	
Record		Yes	
Cause		Corrective Actions	
Hardware failure		Cycle the power. If cd1 still occurs, return to the factory for repair.	

ID*	Display on LCD Keypad	Fault Name	Fault Descriptions
34	AUTO Fault cd2 Ibs sensor err	V-phase error (cd2)	V-phase current detection error when power ON
Action and Reset			
Action level		Hardware detection	
Action time		cd2 acts immediately when the drive detects the fault	
Fault treatment parameter		N/A	
Reset method		Power-off	
Reset condition		N/A	
Record		Yes	
Cause		Corrective Actions	
Hardware failure		Cycle the power. If cd2 still occurs, return to the factory for repair.	

ID*	Display on LCD Keypad	Fault Name	Fault Descriptions
35	AUTO Fault cd3 Ics sensor err	W-phase error (cd3)	W-phase current detection error when power ON
Action and Reset			
Action level		Hardware detection	
Action time		cd3 acts immediately when the drive detects the fault	
Fault treatment parameter		N/A	
Reset method		Power-off	
Reset condition		N/A	
Record		Yes	
Cause		Corrective Actions	
Hardware failure		Cycle the power. If cd3 still occurs, return to the factory for repair.	

ID*	Display on LCD Keypad	Fault Name	Fault Descriptions
36	AUTO Fault Hd0 cc HW error	cc hardware failure (Hd0)	cc (current clamp) hardware protection error when power is ON
Action and Reset			
Action level		Hardware detection	
Action time		Hd0 acts immediately when the drive detects the fault	
Fault treatment parameter		N/A	
Reset method		Power-off	
Reset condition		N/A	
Record		Yes	
Cause		Corrective Actions	
Hardware failure		Cycle the power. If Hd0 still occurs, return to the factory for repair.	

ID*	Display on LCD Keypad	Fault Name	Fault Descriptions
37	AUTO Fault Hd1 Oc HW error	Oc hardware error (Hd1)	oc hardware protection error when power is ON
Action and Reset			
Action level		Hardware detection	
Action time		Hd1 acts immediately when the drive detects the fault	
Fault treatment parameter		N/A	
Reset method		Power-off	
Reset condition		N/A	
Record		Yes	
Cause		Corrective Actions	
Hardware failure		Cycle the power. If Hd1 still occurs, return to the factory for repair.	

ID*	Display on LCD Keypad	Fault Name	Fault Descriptions
38	AUTO Fault Hd2 Ov HW error	ov hardware error (Hd2)	ov hardware protection error when power is ON
Action and Reset			
Action level		Hardware detection	
Action time		Hd2 acts immediately when the drive detects the fault	
Fault treatment parameter		N/A	
Reset method		Power-off	
Reset condition		N/A	
Record		Yes	
Cause		Corrective Actions	
Hardware failure		Cycle the power. If Hd2 still occurs, return to the factory for repair.	

ID*	Display on LCD Keypad	Fault Name	Fault Descriptions
39	AUTO Fault Hd3 occ HW error	occ hardware error (Hd3)	Protection error of occ IGBT short-circuit detection when power is ON
Action and Reset			
Action level		Hardware detection	
Action time		Hd3 acts immediately when the drive detects the fault	
Fault treatment parameter		N/A	
Reset method		Power-off	
Reset condition		N/A	
Record		Yes	
Cause		Corrective Actions	
Hardware failure		Cycle the power. If Hd3 still occurs, return to the factory for repair.	

ID*	Display on LCD Keypad	Fault Name	Fault Descriptions
40	AUTO Fault AUE Auto tuning error	Auto-tuning error (AUE)	Motor auto-tuning error

Action and Reset	
Action level	Hardware detection
Action time	Act immediately
Fault treatment parameter	N/A
Reset method	Manual reset
Reset condition	Reset immediately
Record	Yes
Cause	**Corrective Actions**
Press “STOP” key during auto-tuning	Re-execute auto-tuning.
Incorrect motor capacity (too large or too small) and parameter setting	Check motor capacity and related parameters. Set the correct parameters, that is Pr. 01-01–Pr. 01-02. Set Pr.01-00 larger than motor rated frequency.
Incorrect motor wiring	Check the wiring.
Motor shaft lock	Remove the cause of motor shaft lock.
The electromagnetic contactor is ON at output side (U/V/W) of the drive	Make sure the electromagnetic valve is OFF.
The load is too large.	Reduce the load. Replace the motor with a larger capacity model.
Accel./Decel. time is too short	Increase the setting values for Pr. 01-12–Pr. 01-19 (Accel./Decel. time).

ID*	Display on LCD Keypad	Fault Name	Fault Descriptions
41	AUTO Fault AFE PID Fbk error	PID loss ACI (AFE)	PID feedback loss (analog feedback signal is only valid when the PID function is enabled)

Action and Reset		
Action level	When the analog input < 4mA (only detects 4–20mA analog input)	
Action time	Pr. 08-08	
Fault treatment parameter	Pr. 08-09 0: Warn and keep operation 1: Fault and ramp to stop 2: Warn and coast to stop 3: Fault and operate at last frequency	
Reset method	Auto	When Pr. 08-09=3 or 4, AFE is a “Warning”. When the feedback signal is > 4mA, the ”Warning” is automatically cleared.
	Manual	When Pr. 08-09=1 or 2, AFE is a “Fault”. You must reset manually.
Reset condition	Reset immediately	
Record	When Pr. 08-09=1 or 2, AFE is a “Fault”, and the fault is recorded; when Pr. 08-09=3 or 4, AFE is a “Warning”, and the warning is not recorded.	
Cause	**Corrective Actions**	
PID feedback cable is loose or cut off	Tighten the terminal. Replace the cable with a new one.	
Feedback device failure	Replace the device with a new one.	
Hardware failure	Check all the wiring. If AFE fault still occurs, return to the factory for repair.	

ID*	Display on LCD Keypad	Fault Name	Fault Descriptions
42	AUTO Fault PGF1 PG Fbk error	PG feedback error (PGF1)	The motor runs in a reverse direction to the frequency command direction.
Action and Reset			
Action level		Software detection	
Action time		Pr. 10-09	
Fault treatment parameter		Pr. 10-08 0: Warn and keep operation 1: Fault and ramp to stop 2: Fault and coast to stop	
Reset method		Manual reset	
Reset condition		Reset immediately	
Record		Yes	
Cause		Corrective Actions	
Incorrect parameter setting of encoder		Reset encoder parameter (Pr. 10-02).	
Check wiring of the encoder		Re-wire the encoder.	
PG card or PG encoder failure		Replace PG card or encoder with a new one.	
Malfunction caused by interference		Verify wiring of the control circuit and wiring/grounding of the main circuit to prevent interference.	

ID*	Display on LCD Keypad	Fault Name	Fault Descriptions
43	AUTO Fault PGF2 PG Fbk loss	PG feedback loss (PGF2)	Pr. 10-00 and Pr. 10-02 is not set in the PG control mode. When press “RUN” key, PGF2 fault occurs.
Action and Reset			
Action level		Software detection	
Action time		Act immediately	
Fault treatment parameter		N/A	
Reset method		Manual reset	
Reset condition		Reset immediately	
Record		Yes	
Cause		Corrective Actions	
Incorrect setting of encoder parameter		Reset encoder parameters (Pr. 10-00 and Pr. 10-02)	
Incorrect selection of the control mode		Choose the correct control mode.	

ID*	Display on LCD Keypad	Fault Name	Fault Descriptions
44	AUTO Fault PGF3 PG Fbk over SPD	PG feedback stall (GF3)	Under PG mode, when the motor frequency exceeds the encoder observer stall level (Pr. 10-10) and starts to count, the fault time is longer than the detection time of encoder observer stall (Pr. 10-11), then PGF3 fault occurs.

Action and Reset	
Action level	Pr. 10-10
Action time	Pr. 10-11
Fault treatment parameter	Pr. 10-12 0: Warn and keep operation 1: Fault and ramp to stop 2: Fault and coast to stop
Reset method	Manual reset
Reset condition	Reset immediately
Record	Yes
Cause	**Corrective Actions**
Incorrect setting of encoder parameter	Reset encoder parameter (Pr. 10-01)
Pr. 01-00 is set too small	Set proper value for Pr. 01-00.
Incorrect setting for ASR parameters and accel./decel. time	Reset ASR parameters. Set correct accel./decel. time.
Incorrect setting for PG feedback stall	Reset proper values for Pr. 10-10 and Pr. 10-11

ID*	Display on LCD Keypad	Fault Name	Fault Descriptions
45	AUTO Fault PGF4 PG Fbk deviate	PG slip error (PGF4)	Under PG mode, when the motor frequency exceeds encoder observer slip range (Pr. 10-13) and starts to count, the fault time is longer than the detection time of encoder observer slip (Pr. 10-14), PGF4 fault occurs.

Action and Reset		
Action level	Pr. 10-13	
Action time	Pr. 10-14	
Fault treatment parameter	Pr. 10-15 0: Warn and keep operation 1: Fault and ramp to stop 2: Fault and coast to stop	
Reset method	Auto	When Pr. 10-15=0, PGF4 is a “Warning”, when the deviation between output frequency and motor frequency is smaller than the encoder observer slip range, the warning is automatically cleared.
	Manual	When Pr. 10-15=1 or 2, PGF4 is a “Fault”. You must reset manually.
Reset condition	Reset immediately	
Record	When Pr. 10-15=1 or 2, PGF4 is a “Fault”, and the fault is recorded.	
Cause	**Corrective Actions**	
Incorrect settings for PG feedback parameters	Reset correct values for Pr. 10-13 and Pr. 10-14.	
Incorrect settings for ASR parameters and accel./decel. time	Reset ASR parameters. Set correct accel./decel time.	
Incorrect settings of encoder parameters	Reset encoder parameters (Pr. 10-01).	
Accel./Decel. time is too short	Reset proper accel./decel. time.	
Incorrect settings of torque limit parameters (Pr. 06-12, Pr. 11-17–20)	Reset proper setting values for Pr. 06-12 and Pr. 11-17–Pr. 17-20.	
Motor shaft lock	Remove causes of motor shaft lock.	
Mechanical brake is not released	Check the action sequence of the system.	

ID*	Display on LCD Keypad	Fault Name	Fault Descriptions
48	AUTO Fault ACE ACI loss	ACI loss (ACE)	Analog input loss (including all the 4–20mA analog signal)
Action and Reset			
Action level	When the analog input is < 4mA (only detects 4–20mA analog input)		
Action time	Act immediately		
Fault treatment parameter	Pr. 03-19 0: Disable 1: Continue operation at the last frequency (warning, ANL is displayed on the keypad) 2: Decelerate to stop (warning, ANL is displayed on the keypad) 3: Stop immediately and display ACE		
Reset method	Auto	When Pr. 03-19=1 or 2, ACE is a “Warning”. When analog input signal is > 4mA, the warning is automatically cleared.	
	Manual	When Pr. 03-19=3, ACE is a “Fault”. You must reset manually.	
Reset condition	Reset immediately		
Record	When Pr. 03-19=3, ACE is a “Fault”, and the fault is recorded.		
Cause	Corrective Actions		
ACI cable is loose or cut off	Tighten the terminal. Replace the cable with a new one.		
External device failure	Replace the device with a new one.		
Hardware failure	Check all the wiring. If ACE still occurs, return to the factory for repair.		

ID*	Display on LCD Keypad	Fault Name	Fault Descriptions
49	AUTO Fault EF External fault	External fault (EF)	External fault. When the drive decelerates based on the setting of Pr. 07-20, the EF fault displays on the keypad.
Action and Reset			
Action level	MIx=EF and the MI terminal is ON		
Action time	Act immediately		
Fault treatment parameter	Pr. 07-20 0: Coast to stop 1: Stop by 1st deceleration time 2: Stop by 2nd deceleration time 3: Stop by 3rd deceleration time 4: Stop by 4th deceleration time 5: System deceleration 6: Automatic deceleration (Pr. 01-46)		
Reset method	Manual reset		
Reset condition	Manual reset only after the external fault is cleared (terminal status is recovered)		
Record	Yes		
Cause	Corrective Actions		
External fault	Press RESET key after the fault is cleared.		

ID*	Display on LCD Keypad	Fault Name	Fault Descriptions
50	AUTO Fault EF1 Emergency stop	Emergency stop (EF1)	When the contact of MIx=EF1 is ON, the output stops immediately and displays EF1 on the keypad. The motor is in free running.
Action and Reset			
Action level		MIx=EF1 and the MI terminal is ON	
Action time		Act immediately	
Fault treatment parameter		N/A	
Reset method		Manual reset	
Reset condition		Manual reset only after the external fault is cleared (terminal status is recovered)	
Record		Yes	
Cause		Corrective Actions	
When Mix = EF1 activates		Verify if the system is back to normal condition, and then press “RESET” key to go back to the default.	

ID*	Display on LCD Keypad	Fault Name	Fault Descriptions
51	AUTO Fault bb Base block	External base block (bb)	When the contact of MIx=bb is ON, the output stops immediately and displays bb on the keypad. The motor is in free running.
Action and Reset			
Action level		MIx=bb and the MI terminal is ON	
Action time		Act immediately	
Fault treatment parameter		N/A	
Reset method		The display “bb” is automatically cleared after the fault is cleared.	
Reset condition		N/A	
Record		No	
Cause		Corrective Actions	
When Mix = bb activates		Verify if the system is back to normal condition, and then press “RESET” key to go back to the default.	

ID*	Display on LCD Keypad	Fault Name	Fault Descriptions
52	AUTO Fault Pcod Password error	Password is locked (Pcod)	Entering the wrong password three consecutive times
Action and Reset			
Action level		Entering the wrong password three consecutive times	
Action time		Act immediately	
Fault treatment parameter		N/A	
Reset method		Manual reset	
Reset condition		Power-off	
Record		Yes	
Cause		Corrective Actions	
Incorrect password input through Pr. 00-07		1. Input the correct password after rebooting the motor drive. 2. If you forget the password, do the following steps: Step 1: Input 9999 and press ENTER. Step 2: Repeat step 1. Input 9999 and press ENTER. (You need to finish step 1 and step 2 within 10 seconds. If you don’t finish the two steps in 10 seconds, try again.) 3. The parameter settings return to the default when the “Input 9999” process is finished.	

ID*	Display on LCD Keypad	Fault Name	Fault Descriptions
53	AUTO Fault ccod SW Code Error	SW Code Error (ccod)	This fault code occurs when the firmware version and the control board ID# don't match.
Action and Reset			
Action level		N/A	
Action time		N/A	
Fault treatment parameter		N/A	
Reset method		N/A	
Reset condition		N/A	
Record		N/A	
Cause		Corrective Actions	
The firmware version may be wrong. For example: Firmware of C2000 series is burned into control board of CH2000 series.		Return to the factory for repair.	

ID*	Display on LCD Keypad	Fault Name	Fault Descriptions
54	AUTO Fault CE1 PC err command	Illegal command (CE1)	Communication command is illegal
Action and Reset			
Action level		When the function code is not 03, 06, 10, or 63.	
Action time		Act immediately	
Fault treatment parameter		N/A	
Reset method		Manual reset	
Reset condition		Reset immediately	
Record		No	
Cause		Corrective Actions	
Incorrect communication command from the upper unit		Check if the communication command is correct.	
Malfunction caused by interference		Verify the wiring and grounding of the communication circuit. It is recommended to separate the communication circuit from the main circuit, or wire in 90 degree for effective anti-interference performance.	
Different communication setting from the upper unit		Check if the setting for Pr.09-02 is the same as the setting for the upper unit.	
Disconnection or bad connection of the cable		Check the cable and replace it if necessary.	

ID*	Display on LCD Keypad	Fault Name	Fault Descriptions
55	AUTO Fault CE2 PC err address	Illegal data address (CE2)	Data address is illegal
Action and Reset			
Action level	When the data address is correct.		
Action time	Act immediately		
Fault treatment parameter	N/A		
Reset method	Manual reset		
Reset condition	Reset immediately		
Record	No		
Cause	Corrective Actions		
Incorrect communication command from the upper unit	Check if the communication command is correct.		
Malfunction caused by interference	Verify the wiring and grounding of the communication circuit. It is recommended to separate the communication circuit from the main circuit, or wire in 90 degree for effective anti-interference performance.		
Different communication setting from the upper unit	Check if the setting for Pr.09-02 is the same as the setting for the upper unit.		
Disconnection or bad connection of the cable	Check the cable and replace it if necessary.		

ID*	Display on LCD Keypad	Fault Name	Fault Descriptions
56	AUTO Fault CE3 PC err data	Illegal data value (CE3)	Data value is illegal
Action and Reset			
Action level	When the data length is too long		
Action time	Act immediately		
Fault treatment parameter	N/A		
Reset method	Manual reset		
Reset condition	Reset immediately		
Record	No		
Cause	Corrective Actions		
Incorrect communication command from the upper unit	Check if the communication command is correct.		
Malfunction caused by interference	Verify the wiring and grounding of the communication circuit. It is recommended to separate the communication circuit from the main circuit, or wire in 90 degree for effective anti-interference performance.		
Different communication setting from the upper unit	Check if the setting for Pr.09-02 is the same as the setting for the upper unit.		
Disconnection or bad connection of the cable	Check the cable and replace it if necessary.		

ID*	Display on LCD Keypad	Fault Name	Fault Descriptions
57	AUTO Fault CE4 PC slave fault	Data is written to read-only address (CE4)	Data is written to read-only address
Action and Reset			
Action level		When the data is written to read-only address.	
Action time		Act immediately	
Fault treatment parameter		N/A	
Reset method		Manual reset	
Reset condition		Reset immediately	
Record		No	
Cause		Corrective Actions	
Incorrect communication command from the upper unit		Check if the communication command is correct.	
Malfunction caused by interference		Verify the wiring and grounding of the communication circuit. It is recommended to separate the communication circuit from the main circuit, or wire in 90 degree for effective anti-interference performance.	
Different communication setting from the upper unit		Check if the setting for Pr.09-02 is the same as the setting for the upper unit.	
Disconnection or bad connection of the cable		Check the cable and replace it if necessary.	

ID*	Display on LCD Keypad	Fault Name	Fault Descriptions
58	AUTO Fault CE10 PC time out	MODBUS transmission time-out (CE10)	MODBUS transmission time-out occurs
Action and Reset			
Action level		When the communication time exceeds the detection time for Pr.09-03 time-out.	
Action time		Pr. 09-03	
Fault treatment parameter		Pr. 09-02 0: Warn and continue operation 1: Fault and ramp to stop 2: Fault and coast to stop 3: No warning and continue operation	
Reset method		Manual reset	
Reset condition		Reset immediately	
Record		Yes	
Cause		Corrective Actions	
The upper unit does not transmit the communication command within Pr.09-03 setting time.		Check if the upper unit transmits the communication command within the setting time for Pr.09-03.	
Malfunction caused by interference		Verify the wiring and grounding of the communication circuit. It is recommended to separate the communication circuit from the main circuit, or wire in 90 degree for effective anti-interference performance.	
Different communication setting from the upper unit		Check if the setting for Pr.09-02 is the same as the setting for the upper unit.	
Disconnection or bad connection of the cable		Check the cable and replace it if necessary.	

ID*	Display on LCD Keypad	Fault Name	Fault Descriptions
60	AUTO Fault bF Braking fault	Brake transistor fault (bF)	The brake transistor of the motor drive is abnormal. (for the models with built-in brake transistor)
Action and Reset			
Action level		Hardware detection	
Action time		Act immediately	
Fault treatment parameter		N/A	
Reset method		Manual reset	
Reset condition		Reset immediately	
Record		Yes	
Cause		Corrective Actions	
Hardware fault		1. Press “RESET” key to go back to the default. If bF still occurs, return to the factory for repair. 2. Power off the motor drive since the internal circuit is abnormal. Use a meter to check if it is short-circuit between B2 to DC-. If short-circuit occurs, return to the factory for repair.	
Malfunction caused by interference		Verify wiring/grounding of the main circuit to prevent interference.	
Using the incorrect brake resistor		Check if the resistance value of the brake resistor matches to the drive.	
Incorrect wiring of the brake resistor		Refer to the optional accessories instruction in chapter 7, and verify the wiring.	

ID*	Display on LCD Keypad	Fault Name	Fault Descriptions
61	AUTO Fault ydc Y-delta connect	Y-connection / Δ-connection switch fault (ydc)	A fault occurs when Y-Δ switches
Action and Reset			
Action level		1. ydc occurs when the confirmation signals of Y-connection and Δ-connection are conducted at the same time. 2. If any of confirmation signals is not conducted within Pr. 05-25, ydc occurs.	
Action time		Pr. 05-25	
Fault treatment parameter		N/A	
Reset method		Manual reset	
Reset condition		Can be reset only when the confirmation signal of Y-connection is conducted if it is Y-connection, or when the confirmation signal of Δ-connection is conducted if it is Δ-connection.	
Record		Yes	
Cause		Corrective Actions	
The electromagnetic valve operates incorrectly during Y-Δ switch.		Check if the electromagnetic valve works normally. If not, replace it.	
Incorrect parameter setting		Check if related parameters are all set up and set correctly.	
The wiring of Y-Δ switch function is incorrect		Check the wiring.	

ID*	Display on LCD Keypad	Fault Name	Fault Descriptions
62	AUTO Fault dEb Dec. Energy back	Deceleration energy backup fault (dEb)	When Pr. 07-13 is not 0, and the power is suddenly off, causing the DC bus voltage lower than the dEb action level, the dEb function acts and the motor ramps to stop. Then dEb displays on the keypad.

Action and Reset		
Action level	When Pr. 07-13 is not 0, and the DC bus voltage is lower than the level of dEb.	
Action time	Act immediately	
Fault treatment parameter	N/A	
Reset method	Auto	When Pr. 07-13=2 (dEb with auto-acceleration / auto-deceleration, the drive outputs the frequency after the power is restored): dEb is automatically cleared.
	Hand	When Pr. 07-13=1 (dEb with auto-acceleration / auto-deceleration, the drive does not output the frequency after the power is restored): The drive stops when dEb acts and the rotation speed becomes 0 Hz, then the drive can be reset manually.
Reset condition	Auto: The fault is automatically cleared. Hand: When the drive decelerates to 0 Hz.	
Record	Yes	

Cause	Corrective Actions
Unstable power source or the power is off	Check the power system.
There is any other large load operates in the power system	1. Replace power system with a larger capacity. 2. Use a different power system from the large load system.

ID*	Display on LCD Keypad	Fault Name	Fault Descriptions
63	AUTO Fault oSL Over slip error	Over slip error (oSL)	On the basis of the maximum slip limit set via Pr. 10-29, the speed deviation is abnormal. When the motor drive outputs at constant speed, F>H or F<H exceeds the level set via Pr. 07-29, and it exceeds the time set via Pr. 07-30, oSL shows. oSL occurs in induction motors only.

Action and Reset		
Action level	Pr. 07-29 100% of Pr. 07-29 = the maximum limit of the slip frequency (Pr. 10-29)	
Action time	Pr. 07-30	
Fault treatment parameter	Pr. 07-31 0: Warn and continue operation 1: Fault and ramp to stop 2: Fault and coast to stop 3: No warning	
Reset method	Auto	Pr. 07-31=0 is a warning. When the motor drive outputs at constant speed, and F>H or F<H does not exceed the level set via Pr. 07-29 anymore, oSL warning will be cleared automatically.
	Hand	When Pr. 07-31=1 or 2, oSL is an error, and it needs to reset manually.
Reset condition	Reset immediately	
Record	Pr. 07-31=1 or 2, oSL is “Fault”, and will be recorded.	

Cause	Corrective Actions
Any of the motor parameters in parameter group 5 may be incorrect	Check the motor parameters
Overload	Decrease the load
Any of the setting value of Pr. 07-29, 07-30, and 10-29 is improper	Check the setting of oSL protection function related parameters

ID*	Display on LCD Keypad	Fault Name	Fault Descriptions
64	AUTO Fault ryF MC Fault	Electric valve switch fault (ryF)	Electric valve switch fault when executing Soft Start
Action and Reset			
Action level		Hardware detection (Frame D and above)	
Action time		Act immediately	
Fault treatment parameter		N/A	
Reset method		Manual reset	
Reset condition		Reset when the electric valve switch is correctly closed	
Record		Yes	
Cause		Corrective Actions	
The input power is abnormal		Check if the power is shut down during the drive operation. Check if the three-phase input power is normal.	
Malfunction caused by interference		Verify the wiring/grounding of the main circuit to prevent interference.	
Hardware failure		Cycle the power after checking the power. If ryF fault still occurs, return to the factory for repair.	

ID*	Display on LCD Keypad	Fault Name	Fault Descriptions
65	AUTO Fault PGF5 PG HW Error	Hardware error of PG card (PGF5)	Hardware error of PG card
Action and Reset			
Action level		1. The PG card (PG01U/PG02U) can only be used with the permanent magnetic motor. When the power is ON and Pr. 00-04=29 pole section shows 0 or 7 (wiring error or no U/V/W signal input), the PGF5 error will be activated. 2. The drive receives the operation command right after the power is ON, meanwhile, the PG card is not ready yet.	
Action time		Act immediately	
Fault treatment parameter		N/A	
Reset method		Manual reset	
Reset condition		Reset after cycle the power.	
Record		Yes	
Cause		Corrective Actions	
Wiring error or there is no U/V/W signal input		Re-connect the cables correctly	
Encoder failure		Verify if it is the UVW encoder	
The setting of encoder parameter is incorrect		Choose the correct setting of Pr. 10-00	
If the motor selection switch of PG card on the correct position		Check if it is the UVW encoder or Delta encoder	
PG card selection is incorrect		Install the correct PG card	

ID*	Display on LCD Keypad	Fault Name	Fault Descriptions
68	AUTO Fault SdRv SpdFbk Dir Rev	Reverse direction of the speed feedback (SdRv)	Rotating direction is different from the commanding direction detected by the sensorless

Action and Reset	
Action level	Software detection
Action time	Pr. 10-09
Fault treatment parameter	Pr. 10-08 0: Warn and keep operation 1: Fault and ramp to stop 2: Fault and coast to stop
Reset method	Manual reset
Reset condition	Reset immediately
Record	When Pr. 10-08=1 or 2, SdRv is a “Fault”, and the fault is recorded.

Cause	Corrective Actions
The setting of Pr.10-25 FOC bandwidth of speed observer is improper	Decrease the setting of Pr. 10-25
The setting of motor parameter is incorrect	Reset the motor parameter and execute parameter tuning
The motor cable is abnormal or broken	Check if the cable is well functioned or replace the cable
A reverse force is exerted, or the motor runs in a reverse direction at start	Start speed tracking function (Pr. 07-12)
Malfunction caused by interference	Verify the wiring of the control circuit and wiring/grounding of the main circuit to prevent interference.

ID*	Display on LCD Keypad	Fault Name	Fault Descriptions
69	AUTO Fault SdOr SpdFbk over SPD	Over speed rotation feedback (SdOr)	Over speed rotation detected by sensorless

Action and Reset	
Action level	Pr. 10-10
Action time	Pr. 10-11
Fault treatment parameter	Pr. 10-12 0: Warn and keep operation 1: Fault and ramp to stop 2: Fault and coast to stop
Reset method	Manual reset
Reset condition	Reset immediately
Record	When Pr. 10-12=1 or 2, SdOr is a “Fault”, and the fault is recorded.

Cause	Corrective Actions
The setting of Pr. 10-25 FOC bandwidth of speed observer is improper	Decrease the setting of Pr. 10-25
The setting of ASR bandwidth of speed controller is improper	Increase the bandwidth of ASR speed controller
The setting of motor parameter is incorrect	Reset motor parameter and execute parameter tuning
Malfunction caused by interference	Verify the wiring of the control circuit and wiring/grounding of the main circuit to prevent interference.

ID*	Display on LCD Keypad	Fault Name	Fault Descriptions
70	AUTO Fault SdDe SpdFbk deviate	Large deviation of speed feedback (SdDe)	A large deviation between the rotating speed and the command detected by the sensorless
Action and Reset			
Action level		Pr. 10-13	
Action time		Pr. 10-14	
Fault treatment parameter		Pr. 10-15 0: Warn and keep operation 1: Fault and ramp to stop 2: Fault and coast to stop	
Reset method		Manual reset	
Reset condition		Reset immediately	
Record		When Pr. 10-15=1 or 2, SdDe is a “Fault”, and the fault is recorded.	
Cause		Corrective Actions	
Improper parameter setting for abnormal rotating slip function		Reset proper setting for Pr. 10-13 and Pr. 10-14	
Improper parameter setting for ASR and acceleration/deceleration		Reset ASR parameters Set proper acceleration/deceleration time	
The acceleration/deceleration time is too short		Reset proper acceleration/deceleration time	
Motor shaft lock		Remove the cause of motor shaft lock	
The mechanical brake is not released		Verify the system action timeline	
Incorrect parameter setting for torque limit (Pr. 06-12, Pr. 11-17 – 20)		Adjust the setting to proper value	
Malfunction caused by interference		Verify the wiring of the control circuit and wiring/grounding of the main circuit to prevent interference.	

ID*	Display on LCD Keypad	Fault Name	Fault Descriptions
71	AUTO Fault WDTT Watchdog	Watchdog（WDTT）	Watchdog fault
Action and Reset			
Action level		Hardware detection	
Action time		N/A	
Fault treatment parameter		N/A	
Reset method		Hardware failure, and cannot reset. Cycle the power.	
Reset condition		N/A	
Record		Yes	
Cause		Corrective Actions	
Hardware interference		Verify the wiring of the control circuit and wiring/grounding of the main circuit to prevent interference. If the WDTT fault still occurs, return to the factory for repair.	

ID*	Display on LCD Keypad	Fault Name	Fault Descriptions
72	AUTO Fault STL1 STO Loss 1	STO Loss 1 (STL1)	STO1 – SCM1 internal loop detection fault
Action and Reset			
Action level		Hardware detection	
Action time		Act immediately	
Fault treatment parameter		N/A	
Reset method		Hardware failure, and cannot reset. Cycle the power.	
Reset condition		N/A	
Record		Yes	
Cause		Corrective Actions	
STO1 and SCM1 short circuit lines are not connected		Connect the short circuit line	
Hardware failure		After you make sure all the wiring is correct, if STOL fault still occurs after cycling the power, please return to the factory for repair.	
Bad connection of the IO card		Check if the PIN of IO card is broken. Check if the IO card connects to the control board correctly, and if the screws are tightened well.	
The IO card does not match the version of the control board		Contact local agent or Delta	

ID*	Display on LCD Keypad	Fault Name	Fault Descriptions
73	AUTO Fault S1 S1-emergy stop	Emergency stop for external safety (S1)	Emergency stop for external safety
Action and Reset			
Action level		Hardware detection	
Action time		Act immediately	
Fault treatment parameter		N/A	
Reset method		Manual reset	
Reset condition		Reset only after S1 fault is cleared.	
Record		Yes	
Cause		Corrective Actions	
The switch action of S1 and SCM (OPEN)		Reset the switch and cycle the power.	
S1 and SCM short circuit lines are not connected		Re-connect the short circuit lines	
Malfunction caused by interference		Verify the wiring/grounding of the main circuit, control circuit and encoder to prevent interference.	
Hardware failure		If S1 fault still occurs after cycling the power, please return to the factory for repair.	
Poor connection of the IO card		Check if the PIN of IO card is broken. Check if the IO card connects to the control board correctly, and if the screws are tightened well.	
The IO card does not match the version of the control board		Contact local agent or Delta	

ID*	Display on LCD Keypad	Fault Name	Fault Descriptions
75	AUTO Fault Brk EXT-Brake Error	External brake error (Brk)	External mechanical brake error The MO terminal is active when MOx=12, 42, 47 or 63, but the MIx=55 does not receive signal for mechanical brake action during the set time of Pr. 02-56.

Action and Reset	
Action level	MIx=55 did not receive signal for the mechanical brake action during the set time of Pr. 02-56.
Action time	Pr. 02-56
Fault treatment parameter	N/A
Reset method	Manual reset
Reset condition	Reset immediately
Record	Yes
Cause	**Corrective Actions**
Mechanical brake error	Verify if the mechanical brake can work correctly. Replace mechanical brake.
Incorrect parameter setting	If there is no brake-confirming signal to use, set Pr. 02-56=0.
Signal cable is loose or cut off	Tighten the screws. Replace the signal cable with a new one.
The time of Pr. 02-56 is set too short	Increase the time setting of Pr. 02-56
Malfunction caused by interference	Verify the wiring/grounding of the main circuit, control circuit and encoder to prevent interference.

ID*	Display on LCD Keypad	Fault Name	Fault Descriptions
76	AUTO Fault STO STO	STO (STO)	Safety Torque Off function active

Action and Reset		
Action level	Hardware detection	
Action time	Act immediately	
Fault treatment parameter	N/A	
Reset method	Auto	When Pr. 06-44=1 and after STO fault is cleared, it automatically resets.
	Manual	When Pr. 06-44=0 and after STO fault is cleared, reset it manually.
Reset condition	Reset only after STO fault is cleared.	
Record	Yes	
Cause	**Corrective Actions**	
The switch action of STO1/SCM1 and STO2/SCM2 (OPEN)	Reset the switch (ON) and cycle the power	
Poor connection of the IO card	Check if the PIN of IO card is broken. Check if the IO card connects to the control board correctly, and if the screws are tightened well.	
The IO card does not match the version of the control board	Contact local agent or Delta	

ID*	Display on LCD Keypad	Fault Name	Fault Descriptions
77	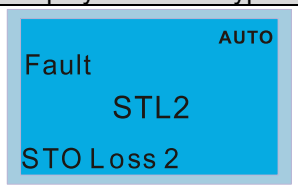	STO Loss 2 (STL2)	STO2–SCM2 internal loop detection fault
Action and Reset			
Action level	Hardware detection		
Action time	Act immediately		
Fault treatment parameter	N/A		
Reset method	Hardware failure, and cannot reset. Cycle the power.		
Reset condition	N/A		
Record	Yes		
Cause	Corrective Actions		
STO2 and SCM2 short circuit lines are not connected	Connect the short circuit lines		
Hardware failure	After you make sure all the wiring is correct, if STL2 fault still occurs after cycling the power, please return to the factory for repair.		
Poor connection of the IO card	Check if the PIN of IO card is broken. Check if the IO card connects to the control board correctly, and if the screws are tightened well.		
The IO card does not match the version of the control board	Contact local agent or Delta		

ID*	Display on LCD Keypad	Fault Name	Fault Descriptions
78	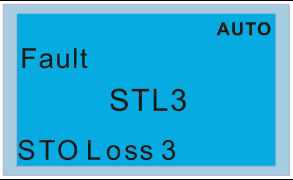	STO Loss 3 (STL3)	STO1–SCM1 and STO2–SCM2 internal loop detection fault
Action and Reset			
Action level	Hardware detection		
Action time	Act immediately		
Fault treatment parameter	N/A		
Reset method	Hardware failure, and cannot reset. Cycle the power.		
Reset condition	N/A		
Record	Yes		
Cause	Corrective Actions		
STO1 and SCM1, or STO2 and SCM2 short circuit lines are not connected	Re-connect the short circuit lines		
Hardware failure	After you make sure all the wiring is correct, if STL3 fault still occurs after cycling the power, please return to the factory for repair.		
Poor connection of the IO card	Check if the PIN of IO card is broken. Check if the IO card connects to the control board correctly, and if the screws are tightened well.		
The IO card does not match the version of the control board	Contact local agent or Delta		

ID*	Display on LCD Keypad	Fault Name	Fault Descriptions
82	AUTO Fault OPHL U phase lacked	Output phase loss U phase (OPHL)	U phase output phase loss
Action and Reset			
Action level	Pr. 06-47		
Action time	Pr. 06-46 Pr. 06-48: Use the setting value of Pr. 06-48 first if there is DC braking function, and then use that of Pr. 06-46.		
Fault treatment parameter	Pr.06-45 0: Warn and keep operation 1: Fault and ramp to stop 2: Fault and coast to stop 3: No warning		
Reset method	Manual reset		
Reset condition	Reset immediately		
Record	Pr. 06-45=1 or 2 is “Fault”, and will be recorded.		
Cause	Corrective Actions		
The three-phase impedance of motor is unbalanced	Replace the motor.		
The motor is wired incorrectly	Check the cable condition. Replace the cable.		
Using a single-phase motor	Choose a three-phase motor		
The current sensor is damaged	Check the flat cable of the control board. Re-do the wiring and test again if the flat cable is loose. If the fault still occurs, return the unit to the factory. Verify that the three-phase current is balanced via a current clamp meter. If it is balanced and the OPHL fault still occurs, return the unit to the factory		
The drive capacity is much larger than the motor capacity	Make sure the capacity of the drive and motor match to each other.		

ID*	Display on LCD Keypad	Fault Name	Fault Descriptions
83	AUTO Fault OPHL V phase lacked	Output phase loss V phase (OPHL)	V phase output phase loss
Action and Reset			
Action level		Pr. 06-47	
Action time		Pr. 06-46 Pr. 06-48: Use the setting value of Pr. 06-48 first. If DC braking function activates, use that of Pr. 06-46.	
Fault treatment parameter		Pr. 06-45 0: Warn and keep operation 1: Fault and ramp to stop 2: Fault and coast to stop 3: No warning	
Reset method		Manual reset	
Reset condition		Reset immediately	
Record		When Pr. 06-45=1 or 2, OPHL is a “Fault”, and the fault is recorded.	
Cause		Corrective Actions	
Unbalanced three-phase impedance of the motor		Replace the motor.	
Check if the wiring is incorrect		Check the cable and replace it if necessary.	
Check if the motor is a single-phase motor		Choose a three-phase motor.	
Check if the current sensor is broken		Check if the control board cable is loose. If yes, reconnect the cable and run the drive to test. If the fault still occurs, return to the factory for repair. Check if the three-phase current is balanced with a current clamp meter. If the current is balanced and the OPHL fault still occurs, return to the factory for repair.	
Check if the drive capacity is larger than the motor capacity		Choose the drive that matches the motor capacity	

ID*	Display on LCD Keypad	Fault Name	Fault Descriptions
84	AUTO Fault OPHL W phase lacked	Output phase loss W phase (OPHL)	W phase output phase loss

Action and Reset	
Action level	Pr. 06-47
Action time	Pr. 06-46 Pr. 06-48: Use the setting value of Pr. 06-48 first. If DC braking function activates, use that of Pr. 06-46.
Fault treatment parameter	Pr. 06-45 0: Warn and keep operation 1: Fault and ramp to stop 2: Fault and coast to stop 3: No warning
Reset method	Manual reset
Reset condition	Reset immediately
Record	When Pr. 06-45=1 or 2, OPHL is a “Fault”, and the fault is recorded.

Cause	Corrective Actions
Unbalanced three-phase impedance of the motor	Replace the motor.
Check if the wiring is incorrect	Check the cable and replace it if necessary.
Check if the motor is a single-phase motor	Choose a three-phase motor.
Check if the current sensor is broken	Check if the control board cable is loose. If yes, reconnect the cable and run the drive to test. If the fault still occurs, return to the factory for repair. Check if the three-phase current is balanced with a current clamp meter. If the current is balanced and the OPHL fault still occurs, return to the factory for repair.
Check if the drive capacity is larger than the motor capacity	Choose the drive that matches the motor capacity

ID*	Display on LCD Keypad	Fault Name	Fault Descriptions
85	AUTO Fault AboF PG ABZ Line off	PG ABZ line off (AboF)	The ABZ line off for protection when using PG02U

Action and Reset	
Action level	Hardware detection
Action time	Act immediately
Fault treatment parameter	N/A
Reset method	Manual reset
Reset condition	Reset immediately
Record	Yes

Cause	Corrective Actions
The PG signal cable is not connected or cut off	Check the PG signal cable
PG card screw is loose	Tighten all the screws
Malfunction caused by interference	Verify the wiring/grounding of the main circuit, control circuit and encoder to prevent interference.
Hardware failure	1. After you check the wiring, if AboF fault still occurs after cycle the power, return to the factory for repair. 2. Check if the VP power of PG card has no output, or the output voltage level is abnormal. 3. Check if the encoder is broken.
Encoder wiring is too long, causing large voltage drop of PG card VP power.	1. Decrease the wiring length. 2. Power on the encoder by other power sources.

ID*	Display on LCD Keypad	Fault Name	Fault Descriptions
86	AUTO Fault UvoF PG UVW Line off	PG UVW line off (UvoF)	UVW line off for protection when using PG02U
Action and Reset			
Action level		Hardware detection	
Action time		Act immediately	
Fault treatment parameter		N/A	
Reset method		Manual reset	
Reset condition		Reset immediately	
Record		Yes	
Cause		Corrective Actions	
The PG signal cable is not connected or cut off		Check the PG signal cable	
PG card screw is loose		Tighten all the screws	
Malfunction caused by interference		Verify the wiring/grounding of the main circuit, control circuit and encoder to prevent interference.	
Hardware failure		1. After you check the wiring, if AboF fault still occurs after cycle the power, return to the factory for repair. 2. Check if the VP power of PG card has no output, or the output voltage level is abnormal. 3. Check if the encoder is broken.	
Encoder wiring is too long, causing large voltage drop of PG card VP power.		1. Decrease the wiring length. 2. Power on the encoder by other power sources.	

ID*	Display on LCD Keypad	Fault Name	Fault Descriptions
87	AUTO Fault oL3 Derating Error	Overload protection at low frequency (oL3)	Low frequency and high current protection
Action and Reset			
Action level		Software detection	
Action time		Act immediately	
Fault treatment parameter		N/A	
Reset method		Manual reset	
Reset condition		Reset immediately	
Record		Yes	
Cause		Corrective Actions	
The drive operates in the low frequency range (High HP: below 15 Hz; Low HP: below 5 Hz) and IGBT temperature (High HP: 20°C; Low HP: 50°C)		1. Enhance the heat dissipation capacity for the cabinet. 2. Lower the carrier frequency (Pr.00-17). 3. Decrease the voltage settings that correspond to frequency below 15 Hz in the V/F curve. 4. Change Pr.00-11 to general control mode. 5. Replace the drive with a larger power model.	

ID*	Display on LCD Keypad	Fault Name	Fault Descriptions
89	AUTO Fault RoPd Rotor Pos. Error	Rotor position detection error (RoPd)	Rotor position detection error protection
Action and Reset			
Action level		Reset the software	
Action time		Act immediately	
Fault treatment parameter		N/A	
Reset method		Manual reset	
Reset condition		Reset immediately	
Record		Yes	
Cause		Corrective Actions	
Check if the motor cable is abnormal or broken		Check or replace the cable.	
Motor coil error		Replace the motor.	
Hardware failure		IGBT broken. Return to the factory for repair.	
Drive's current feedback line error		Cycle the power. If RoPd still occurs during operation, return to the factory for repair.	

ID*	Display on LCD Keypad	Fault Name	Fault Descriptions
90	AUTO Fault Fstp Force Stop	Force to stop (FStp)	Keypad forces PLC to Stop
Action and Reset			
Action level		When Pr. 00-32=1, STOP button on the keypad is valid. When giving the STOP command during the PLC operation, FStp fault occurs.	
Action time		Act immediately	
Fault treatment parameter		N/A	
Reset method		Manual reset	
Reset condition		Reset immediately	
Record		Yes	
Cause		Corrective Actions	
Pr. 00-32=1: keypad STOP button is valid		Check if it is necessary to set Pr. 00-32=0, so the keypad STOP button is invalid.	
Press STOP button during PLC operation		Verify the timing of STOP function.	

ID*	Display on LCD Keypad	Fault Name	Fault Descriptions
92	AUTO Fault LEr Pul. Tun. L Err	Pulse Tuning Inductance (L) Error (LEr)	This fault code occurs when D-axis and Q- axis inductance auto-tunes for more than 3 times.
Action and Reset			
Action level		Software detection	
Action time		Act immediately	
Fault treatment parameter		N/A	
Reset method		Manual reset	
Reset condition		Reset immediately	
Record		Yes	
Cause		Corrective Actions	
The motor drive doesn't disengaging the load.		Verify if the motor drive is auto-tuning.	
Mistake on setting up the motor parameters.		Verify if you set up the motor parameters according to the nameplate on the motor.	

ID*	Display on LCD Keypad	Fault Name	Fault Descriptions
93	AUTO Fault TRAP CPU Trap 0 error	CPU error 0 (TRAP)	CPU crash
Action and Reset			
Action level		Hardware detection	
Action time		Act immediately	
Fault treatment parameter		N/A	
Reset method		Cannot reset, power off.	
Reset condition		N/A	
Record		Yes	
Cause		Corrective Actions	
Hardware interference		Verify the wiring of control circuit, and the wiring/grounding of the main circuit to prevent interference. If TRAP fault still occurs, return to the factory for repair.	
Hardware failure		Return to the factory for repair.	
CPU is in an infinite loop		Cycle the power. If the TRAP fault still occurs, return to the factory for repair.	

ID*	Display on LCD Keypad	Fault Name	Fault Descriptions
101	AUTO Fault CGdE Guarding T-out	CANopen guarding fault (CGdE)	CANopen guarding fault
Action and Reset			
Action level		When CANopen Node Guarding detects that one of the slaves is not responding, the CGdE fault occurs. The upper unit sets factor and time during configuration.	
Action time		The time that upper unit sets during configuration	
Fault treatment parameter		N/A	
Reset method		Manual reset	
Reset condition		The upper unit sends a reset package to clear this fault	
Record		Yes	
Cause		Corrective Actions	
The guarding time is too short, or less detection times		Increase the guarding time (Index 100C) and detection times	
Malfunction caused by interference		1. Verify the wiring and grounding of the communication circuit. It is recommended to separate the communication circuit from the main circuit, or wire in 90 degree for effective anti-interference performance. 2. Make sure the communication circuit is wired in series. 3. Use CANopen cable or add terminating resistance.	
Communication cable is broken or bad connected		Check or replace the communication cable.	

ID*	Display on LCD Keypad	Fault Name	Fault Descriptions
102	AUTO Fault CHbE Heartbeat T-out	CANopen heartbeat fault (CHbE)	CANopen heartbeat fault
Action and Reset			
Action level		When CANopen Heartbeat detects that one of the slaves is not responding, the CHbE fault occurs. The upper unit sets the confirming time of producer and consumer during configuration.	
Action time		The confirming time that upper unit sets for producer and consumer during configuration.	
Fault treatment parameter		N/A	
Reset method		Manual reset	
Reset condition		The upper unit sends a reset package to clear this fault	
Record		Yes	
Cause		Corrective Actions	
The heartbeat time is too short		Increase heartbeat time (Index 100C)	
Malfunction caused by interference		1. Verify the wiring and grounding of the communication circuit. It is recommended to separate the communication circuit from the main circuit, or wire in 90 degree for effective anti-interference performance. 2. Make sure the communication circuit is wired in series. 3. Use CANopen cable or add terminating resistance.	
Communication cable is broken or bad connected		Check or replace the communication cable.	

ID*	Display on LCD Keypad	Fault Name	Fault Descriptions
104	AUTO Fault CbFE Can bus off	CANopen bus off fault (CbFE)	CANopen bus off fault
Action and Reset			
Action level		Hardware	When CANopen card is not installed, CbFE fault occurs.
		Software	When the master received wrong communication package, CbFE fault occurs. Too much interference on BUS When the CAN_H and CAN_L communication cable is short, the master will receive wrong package, and CbFE fault occurs.
Action level		Act immediately	
Fault treatment parameter		N/A	
Reset method		Manual reset	
Reset condition		Cycle the power	
Record		Yes	
Cause		Corrective Actions	
Check if the CANopen card is installed		Make sure the CANopen card is installed.	
Check if the CANopen speed is correct		Reset CANopen speed (Pr. 09-37)	
Malfunction caused by interference		1. Verify the wiring and grounding of the communication circuit. It is recommended to separate the communication circuit from the main circuit, or wire in 90 degree for effective anti-interference performance. 2. Make sure the communication circuit is wired in series. 3. Use CANopen cable or add terminating resistance.	
Communication cable is broken or bad connected		Check or replace the communication cable.	

ID*	Display on LCD Keypad	Fault Name	Fault Descriptions
105	AUTO Fault CIdE Can bus Index Err	CANopen index error (CIdE)	CANopen index error
Action and Reset			
Action level		Software detection	
Action time		Act immediately	
Fault treatment parameter		N/A	
Reset method		Manual reset	
Reset condition		Upper unit sends a reset package to clear this fault	
Record		Yes	
Cause		Corrective Actions	
Incorrect setting of CANopen index		Reset CANopen Index (Pr. 00-02=7)	

ID*	Display on LCD Keypad	Fault Name	Fault Descriptions
106	AUTO Fault CAdE Can bus Add. Err	CANopen station address error (CAdE)	CANopen station address error (only supports 1 – 127)
Action and Reset			
Action level		Software detection	
Action time		Act immediately	
Fault treatment parameter		N/A	
Reset method		Manual reset (Pr.00-02=7)	
Reset condition		N/A	
Record		Yes	
Cause		Corrective Actions	
Incorrect setting of CANopen station address		1. Disable CANopen (Pr.09-36=0) 2. Reset CANopen (Pr.00-02=7) 3. Reset CANopen station address (Pr.09-36)	

ID*	Display on LCD Keypad	Fault Name	Fault Descriptions
107	AUTO Fault CFrE Can bus off	CANopen memory error (CFrE)	CANopen memory error
Action and Reset			
Action level		When the user update firmware version of the control board, but the FRAM internal data remains the same, then CFrE fault occurs.	
Action time		Act immediately	
Fault treatment parameter		N/A	
Reset method		Manual reset	
Reset condition		Pr. 00-02=7	
Record		Pr. 00-21=3, the fault is recorded	
Cause		Corrective Actions	
CANopen internal memory error		1. Disable CANopen (Pr. 09-36=0) 2. Reset CANopen (Pr. 00-02=7) 3. Reset CANopen station address (Pr. 09-36)	

ID*	Display on LCD Keypad	Fault Name	Fault Descriptions
111	AUTO Fault ictE InrCom Time Out	InrCOM time-out error (ictE)	Internal communication time-out
Action and Reset			
Action level		Pr.09-31=-1 ~ -10 (there is no -9), when the internal communication between Slave and Master is abnormal, IctE fault occurs.	
Action time		Act immediately	
Fault treatment parameter		N/A	
Reset method		Automatically reset after the internal communication is normal	
Reset condition		N/A	
Record		Yes	
Cause		Corrective Actions	
Malfunction caused by interference		Verify the wiring and grounding of the communication circuit. It is recommended to separate the communication circuit from the main circuit, or wire in 90 degree for effective anti-interference performance.	
The communication condition is different with the upper unit		Verify the setting of Pr. 09-02 is the same as the setting of upper unit.	
Communication cable is broken or bad connected		Check or replace the communication cable.	

ID*	Display on LCD Keypad	Fault Name	Fault Descriptions
112	AUTO Fault SfLK PMLess Shaft Lock	PMLess shaft lock (SfLK)	The drive has RUN command with output frequency, but the permanent magnetic motor does not turn.
Action and Reset			
Action level		Software detection	
Action time		3 sec.	
Fault treatment parameter		N/A	
Reset method		Manual reset	
Reset condition		Reset immediately	
Record		Yes	
Cause		Corrective Actions	
Improper setting of the speed observer bandwidth		Increase the setting value.	
Motor shaft lock		Remove causes of the motor shaft lock.	
Motor error (e.g. demagnetization)		Replace the motor with a new one.	

ID*	Display on LCD Keypad	Fault Name	Fault Descriptions
142	AUTO Fault AUE1 Auto tuning Err	Auto-tune error 1 (AUE1)	No feedback current error when motor parameter automatically detects
Action and Reset			
Action level		Software detection	
Action time		Act immediately	
Fault treatment parameter		N/A	
Reset method		Manual reset	
Reset condition		Reset immediately	
Record		Yes	
Cause		Corrective Actions	
Motor is not wired		Wire the motor correctly	
The electromagnetic contactor is used as an open circuit on the output side of the drive (U/V/W).		Verify that the electromagnetic valve is closed.	

ID*	Display on LCD Keypad	Fault Name	Fault Descriptions
143	AUTO Fault AUE2 Auto tuning Err	Auto-tune error 2 (AUE2)	Motor phase loss error when motor parameter automatically detects
Action and Reset			
Action level		Software detection	
Action time		Act immediately	
Fault treatment parameter		N/A	
Reset method		Manual reset	
Reset condition		Reset immediately	
Record		Yes	
Cause		Corrective Actions	
Incorrect motor wiring		Wire the motor correctly.	
Motor error		Check if the motor works normally.	
The electromagnetic contactor is used as an open circuit on the output side of the drive (U/V/W).		Verify that the three-phases of the electromagnetic valve are all closed.	
Motor U/V/W wire error		Check if the wires are broken.	

ID*	Display on LCD Keypad	Fault Name	Fault Descriptions
144	AUTO Fault AUE3 Auto tuning Err	Auto-tune error 3 (AUE3)	No load current I_0 measurement error when motor parameter automatically detects.
Action and Reset			
Action level		Software detection	
Action time		Act immediately	
Fault treatment parameter		N/A	
Reset method		Manual reset	
Reset condition		Reset immediately	
Record		Yes	
Cause		Corrective Actions	
Incorrect settings for the motor parameter (rated current)		Check the settings for Pr. 05-01 / Pr. 05-13 / Pr. 05-34.	
Motor error		Check if the motor works normally.	

ID*	Display on LCD Keypad	Fault Name	Fault Descriptions
148	AUTO Fault AUE4 Auto tuning Err	Auto-tune error 4 (AUE4)	Leakage inductance Lsigma measurement error when motor parameter automatically detects.
Action and Reset			
Action level		Software detection	
Action time		Act immediately	
Fault treatment parameter		N/A	
Reset method		Manual reset	
Reset condition		Reset immediately	
Record		Yes	
Cause		Corrective Actions	
Motor error		Check if the motor works normally.	
Incorrect setting of motor parameters (base frequency)		Check the setting of Pr. 01-01.	

ID*	Display on LCD Keypad	Fault Name	Fault Descriptions
171	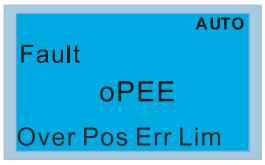	Over Position Error Limit (oPEE)	This fault code occurs: 1. When the positioning error of a position controller is bigger than Pr.11-51 <Maximum allowable position-following error> 2. .And when Pr.11-54: Treatment to the large position control error is set as 1: Fault and ramp to stop or 2: Fault and coast to stop.

Action and Reset	
Action level	Pr.11-51
Action time	Act immediately
Fault treatment parameter	Pr.11-54
Reset method	Manual reset
Reset condition	
Record	Yes

Cause	Corrective Actions
The acceleration/ deceleration time may not be correct.	Verify if the acceleration/ deceleration time is correct.
Setting value of Pr.11-51 may be too small.	Verify if the setting value of Pr.11-51 is too small.
The positon control of the motor drive may not be working properly.	1. Verify if the position control works properly. 2. Verify if the settings of APR bandwidth control and the gain value for the APR feed forward are correct.
The setting of command curve at the upper unit during the whole pulse positioning process may not be right.	If you set Pr.11-40 =1 (Input from external pulse) or set MI=90 (Position command source switch and choose 1: Input from external pulse), you need to verify if the acceleration/ deceleration curve of the pulse given by the upper unit is correct.

Chapter 15 CANopen Overview

15-1 CANopen Overview

15-2 Wiring for CANopen

15-3 CANopen Communication Interface Description

15-4 CANopen Supported Index

15-5 CANopen Fault Code

15-6 CANopen LED Function

The built-in CANopen function is a kind of remote control. You can control the AC motor drive by using CANopen protocol. CANopen is a CAN-based higher layer protocol that provides standardized communication objects, including real-time data (Process Data Objects, PDO), configuration data (Service Data Objects, SDO), and special functions (Time Stamp, Sync message, and Emergency message). It also has network management data, including Boot-up message, NMT message, and Error Control message. Refer to the CiA website http://www.can-cia.org/ for details. The content of this instruction sheet may be revised without prior notice. Consult our distributors or download the most updated version at http://www.delta.com.tw/industrialautomation

Delta CANopen supporting functions:

- Supports CAN2.0A Protocol
- Supports CANopen DS301 V4.02
- Supports DS402 V2.0.

Delta CANopen supporting services:

- PDO (Process Data Objects): PDO1–PDO4
- SDO (Service Data Objects):
  Initiate SDO Download;
  Initiate SDO Upload;
  Abort SDO;
  You can use the SDO message to configure the slave node and access the Object Dictionary in every node.
- SOP (Special Object Protocol):
  Support default COB-ID in Predefined Master/Slave Connection Set in DS301 V4.02;
  Support SYNC service;
  Support Emergency service.
- NMT (Network Management):
  Support NMT module control;
  Support NMT Error control;
  Support Boot-up.

Delta CANopen not supporting service:

- Time Stamp service

15-1 CANopen Overview

CANopen Protocol

CANopen is a CAN-based higher layer protocol, and was designed for motion-oriented machine control networks such as handling systems. Version 4.02 of CANopen (CiA DS301) is standardized as EN50325-4. The CANopen specifications cover the application layer and communication profile (CiA DS301), as well as a framework for programmable devices (CiA DS302), recommendations for cables and connectors (CiA DS303-1), SI units, and prefix representations (CiA DS303-2).

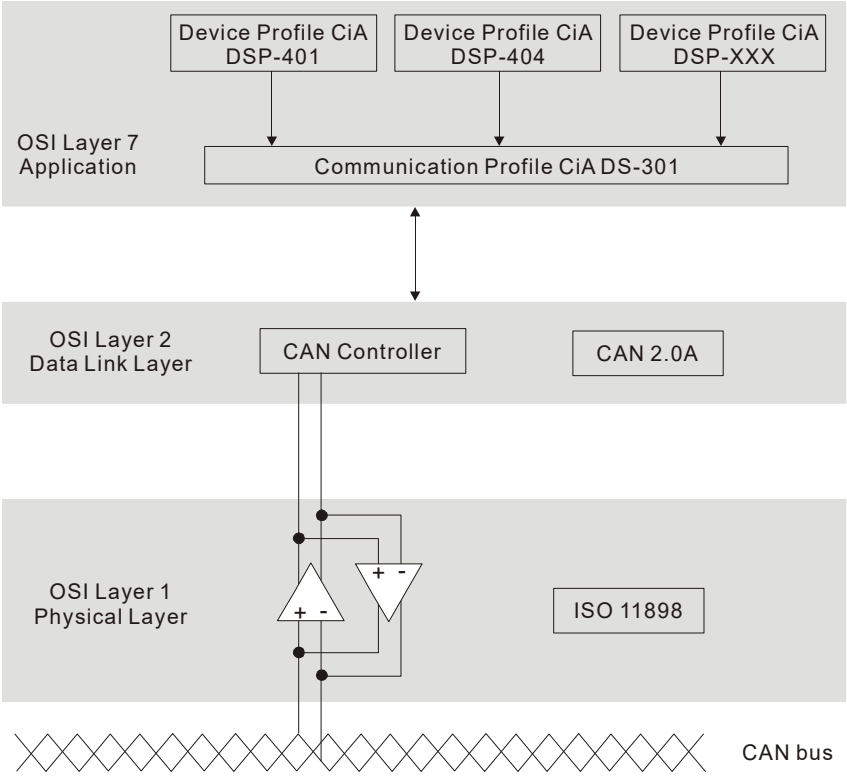

RJ45 Pin Definition

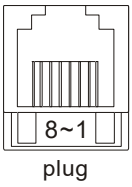

PIN	Signal	Description
1	CAN_H	CAN_H bus line (dominant high)
2	CAN_L	CAN_L bus line (dominant low)
3	CAN_GND	Ground / 0V /V-
6	CAN_GND	Ground / 0V /V-

CANopen Communication Protocol

It has services as follows:

- NMT (Network Management Object)
- SDO (Service Data Objects)
- PDO (Process Data Object)
- EMCY (Emergency Object)

NMT (Network Management Object)

The Network Management (NMT) follows a Master/Slave structure for executing NMT service. A network has only one NMT master, and the other nodes are slaves. All CANopen nodes have a present NMT state, and the NMT master can control the state of the slave nodes. Following shows the state diagram of a node:

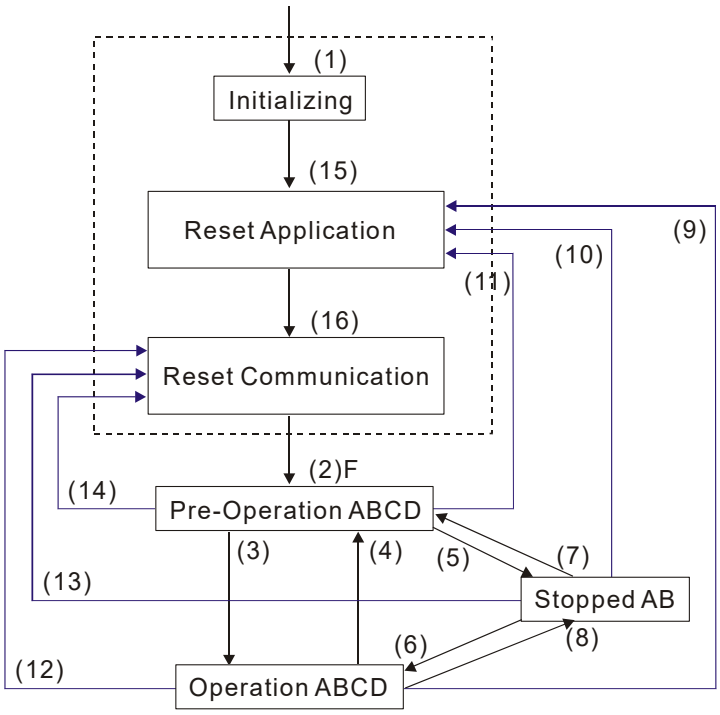

(1) After power is applied, start in the auto-initialization state
(2) Automatically enter the pre-operational state
(3) (6) Start remote node
(4) (7) Enter the pre-operational state
(5) (8) Stop remote node
(9) (10) (11) Reset node
(12) (13) (14) Reset communication
(15) Automatically enter the reset application state
(16) Automatically enter the reset communication state

A: NMT
B: Node Guard
C: SDO
D: Emergency
E: PDO
F: Boot-up

	Initializing	Pre-Operational	Operational	Stopped
PDO			○	
SDO		○	○	
SYNC		○	○	
Time Stamp		○	○	
EMCY		○	○	
Boot-up	○			
NMT		○	○	○

SDO (Service Data Objects)

Use SDO to access the Object Dictionary in every CANopen node using the Client/Server model. One SDO has two COB-IDs (request SDO and response SDO) to upload or download data between two nodes. There is no data limit for SDOs to transfer data, but it must transfer data by segment when the data exceeds four bytes with an end signal in the last segment.

The Object Dictionary (OD) is a group of objects in a CANopen node. Every node has an OD in the system, and OD contains all parameters describing the device and its network behavior. The access path in the OD is the index and sub-index; each object has a unique index in the OD, and has a sub-index if necessary.

PDO (Process Data Objects)

PDO communication can be described by the producer/ consumer model. Each node of the network listens to the messages of the transmission node and distinguishes whether the message has to be processed or not after receiving the message. A PDO can be transmitted from one device to one another device or to many other devices. Every PDO has two PDO services: a TxPDO and an RxPDO. PDOs are transmitted in a non-confirmed mode. All transmission types are listed in the following table:

Type Number	PDO				
	Cyclic	Acyclic	Synchronous	Asynchronous	RTR only
0		○	○		
1–240	○		○		
241–251	Reserved				
252			○		○
253				○	○
254				○	
255				○	

- Type number 0 indicates the synchronous aperiodic message between two PDO transmissions.
- Type number 1–240 indicates the number of SYNC message between two PDO transmissions.
- Type number 252 indicates the data is updated (but not sent) immediately after receiving SYNC.
- Type number 253 indicates the data is updated immediately after receiving RTR.
- Type number 254: Delta CANopen does not support this transmission format.
- Type number 255 indicates the data is an asynchronous aperiodic transmission.

All PDO transmission data must be mapped to index via Object Dictionary.

EMCY (Emergency Object)

When errors occur inside the hardware, an emergency object is triggered. An emergency object is only sent when an error occurs. As long as there is nothing wrong with the hardware, there is no emergency object warning of an error message.

15-2 Wiring for CANopen

Use an external adapter card EMC-COP01 for CANopen wiring to connect the CANopen to the drive. The link uses a RJ45 cable. You must wire the two farthest ends with 120 Ω terminating resistors as shown in the picture below.

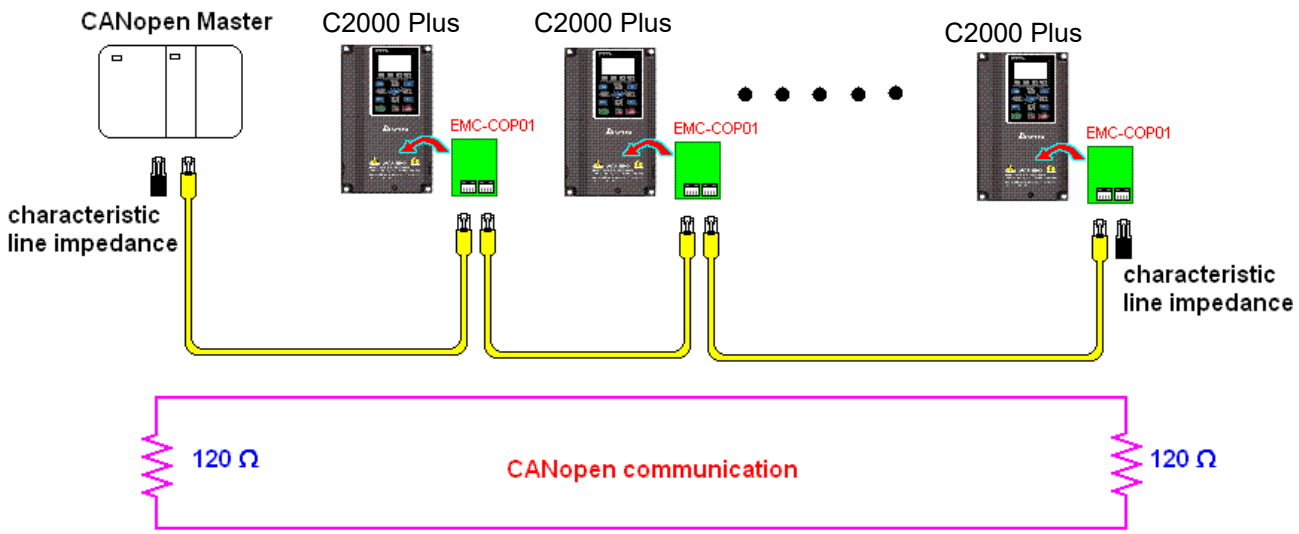

15-3 CANopen Communication Interface Descriptions

15-3-1 CANopen Control Mode Selection

There are two control modes for CANopen: the DS402 standard (Pr.09-40 set to 1) is the default, and the Delta's standard setting (Pr.09-40 set to 0). There are two control modes according to Delta's standard. One is the old control mode (Pr.09-30 = 0); this control mode can only control the motor drive under the speed control. The other mode is a new standard (Pr.09-30 = 1); this new control mode allows the motor drive to be controlled under multiple modes. The C2000 Plus currently supports speed, torque, position and home mode. The following table shows the control mode definitions:

CANopen Control Mode Selection	Control Mode							
	Speed		Torque		Position		Home	
	Index	Description	Index	Description	Index	Description	Index	Description
DS402 Standard Pr.09-40=1	6042-00	Target Rotating Speed (RPM)	6071-00	Target Torque (%)	607A-00	Target Position	-----	-----
	-----	-----	6072-00	Max. Torque Limit (%)	-----	-----	-----	-----
Delta Standard (Old definition) Pr.09-40=1, Pr.09-30=0	2020-02	Target Rotating Speed (Hz)	-----	-----	-----	-----	-----	-----
Delta Standard (New definition) Pr.09-40=0, Pr.09-30=1	2060-03	Target Rotating Speed (Hz)	2060-07	Target Torque (%)	2060-05	Target Position	-----	-----
	2060-04	Torque Limit (%)	2060-08	Speed Limit (Hz)	-----	-----	-----	-----

CANopen Control Mode Selection	Operation Control	
	Index	Description
DS402 Standard Pr.09-40=1	6040-00	Operation Command
	-----	-----
Delta Standard (Old definition) Pr.09-40=1, Pr.09-30=0	2020-01	Operation Command
Delta Standard (New definition) Pr.09-40=0, Pr.09-30=1	2060-01	Operation Command
	-----	-----

CANopen Control Mode Selection	Others	
	Index	Description
DS402 Standard Pr.09-40=1	605A-00	Quick stop processing mode
	605C-00	Disable operation processing mode
Delta Standard (Old definition) Pr.09-40=1, Pr.09-30=0	-----	-----
Delta Standard (New definition) Pr.09-40=0, Pr.09-30=1	-----	-----
	-----	-----

You can use some indices in either DS402 or Delta's standard.

For example:

1. Indices that are defined as RO attributes.
2. The corresponding index of available parameter groups: (2000-00–200B-XX)
3. Acceleration / Deceleration Index: 604F 6050

15-3-2 DS402 Standard Control Mode

15-3-2-1 Related settings for an AC motor drive (following the DS402 standard)

If you want to use the DS402 standard to control the motor drive, follow these steps:

1. Wire the hardware (refer to Section 15-2 Wiring for CANopen)
2. Set the operation source: set Pr.00-21 to 3 for CANopen communication card control. (Run/ stop, forward/ reverse run…etc.)
3. Set the frequency source: set Pr.00-20 to 6. Choose the source for the Frequency command from the CANopen setting.
4. Set the torque source: set Pr.11-33. Choose the source for the Torque command from the CANopen setting.
5. Set the position source: set Pr.11-40. Choose the source for the Position command from the CANopen setting.
6. Set DS402 as the control mode: Pr.09-40=1
7. Set the CANopen station: set Pr.09-36; the range is between 1–127. When Pr.09-36 = 0, the CANopen slave function is disabled. Note that if an error appears (station address error CAdE or CANopen memory error CFrE) when you finish the station setting, set Pr.00-02 = 7 to reset.
8. Set the CANopen baud rate: set Pr.09-37 (CANBUS Baud Rate: 1Mbps(0), 500Kbps(1), 250Kbps(2), 125Kbps(3), 100Kbps(4) and 50Kbps(5))
9. Set the multiple input functions to Quick Stop. You can also choose enable or disable; the default setting is disabled. If it is necessary to enable the function, set MI terminal to 53 in one of the following parameters: Pr.02.01–Pr.02.08 or Pr.02.26–Pr.02.31. (Note: This function is available in DS402 only.)

15-3-2-2 The status of the motor drive (following the DS402 standard)

According to the DS402 definition, the motor drive is divided into 3 blocks and 9 statuses as described below.

3 blocks

1. Power Disable: without PWM output
2. Power Enable: with PWM output
3. Fault: One or more errors have occurred.

9 statuses

1. Start: Power On
2. Not ready to switch on: the motor drive is initiating.
3. Switch On Disable: occurs when the motor drive finishes initiating.
4. Ready to Switch On: warming up before running.
5. Switch On: the motor drive has the PWM output, but the reference command is not effective.
6. Operation Enable: able to control normally.
7. Quick Stop Active: when there is a Quick Stop request, stop running the motor drive.
8. Fault Reaction Active: the motor drive detects conditions that might trigger error(s).
9. Fault: One or more errors have occurred in the motor drive.

When the motor drive turns on and finishes the initiation, it remains in Ready to Switch On status. To control the operation of the motor drive, change to Operation Enable status. To do this, set the control word's bit0–bit3 and bit7 of the Index 6040H and pair with Index Status Word (Status Word 0X6041). The control steps and index definition are described below.

Index 6040

15–9	8	7	6~4	3	2	1	0
Reserved	Halt	Fault Reset	Operation	Enable operation	Quick Stop	Enable Voltage	Switch On

Index 6041

15–14	13–12	11	10	9	8	7	6	5	4	3	2	1	0
Reserved	Operation	Internal limit active	Target reached	Remote	Reserved	Warning	Switch on disabled	Quick stop	Voltage enabled	Fault	Operation enable	Switch on	Ready to switch on

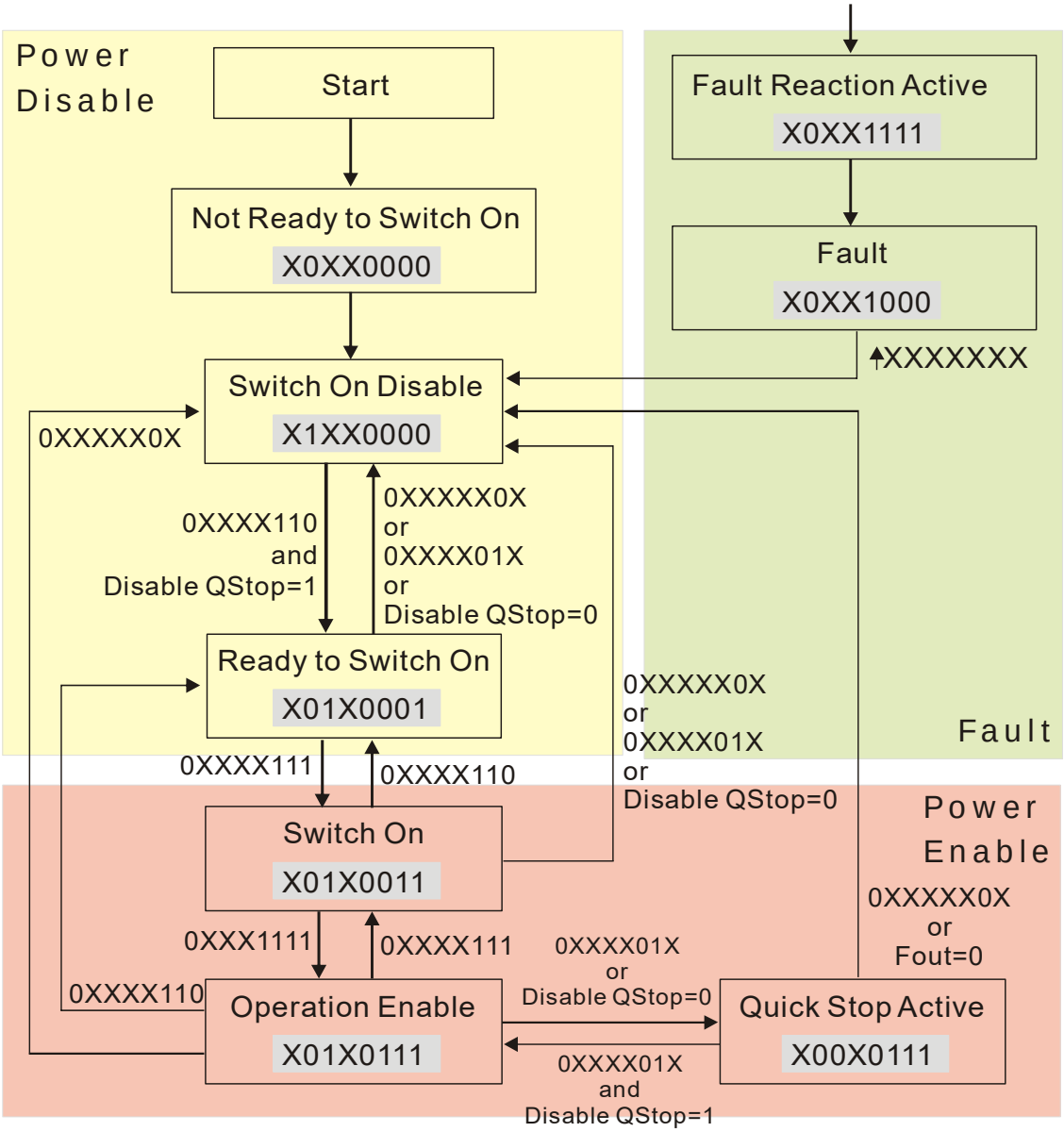

Set command 6040=0xE, and then set another command 6040=0xF. Then you can switch the motor drive to Operation Enable. The Index 605A determines the lines from Operation Enable when the control mode changes from Quick Stop Active. When the setting value is 1–3, both direction lines are active, but when the setting value of 605A is not 1–3, once the motor drive is switched to Quick Stop Active, it is not able to switch back to Operation Enable.)

Index	Sub	Definition	Default	R/W	Size	Unit	PDO Map	Mode	note
605Ah	0	Quick stop option code	2	RW	S16		No		0: Disable drive function 1: Slow down on slow down ramp 2: Slow down on quick stop ramp 5: Slow down on slow down ramp and stay in QUICK STOP 6: Slow down on quick stop ramp and stay in QUICK STOP 7: Slow down on the current limit and stay in Quick stop

When the control block switches from Power Enable to Power Disable, use 605C to define the stop method.

Index	Sub	Definition	Default	R/W	Size	Unit	PDO Map	Mode	note
605Ch	0	Disable operation option code	1	RW	S16		No		0: Disable drive function 1: Slow down with slow down ramp; disable the drive function

15-3-2-3 Various mode control method (following the DS402 standard)

The control mode of C2000 Plus currently supports speed, torque, position and home control, and are described as below:

Speed mode

1. Set C2000 Plus to speed control mode: set Index 6060 to 2.
   (The Index 6071 is available for torque limit under the speed control mode)
2. Switch to Operation Enable mode: set 6040=0xE, and then set 6040 = 0xF.
3. Set the target frequency: Set target frequency of 6042. Since the operation unit of 6042 is rpm, a conversion is required:

   $$n = f \times \frac{120}{p}$$

   n: rotation speed (rpm) (revolutions /minute)
   p: number of poles of the motor (Pole)
   f: rotation frequency (Hz)

   For example:
   Set 6042H = 1500 (rpm), if the number of poles for the drive is 4 (Pr.05-04 or Pr.05-16), then the motor drive's operation frequency is 1500/(120/4)=50Hz. The 6042 is defined as a signed operation. The plus or minus sign means to rotate clockwise or counter-clockwise
4. To set acceleration and deceleration: Use 604F (Acceleration) and 6050 (Deceleration).
5. Trigger an ACK signal: in the speed control mode, control the bit 6–4 of Index 6040. It is defined as below:

	Index 6040			Result
	bit 6	bit 5	bit 4	
Speed mode (Index 6060=2)	1	0	1	Locked at the current frequency.
	1	1	1	Run to reach the target frequency.
	Other			Decelerating to 0Hz.

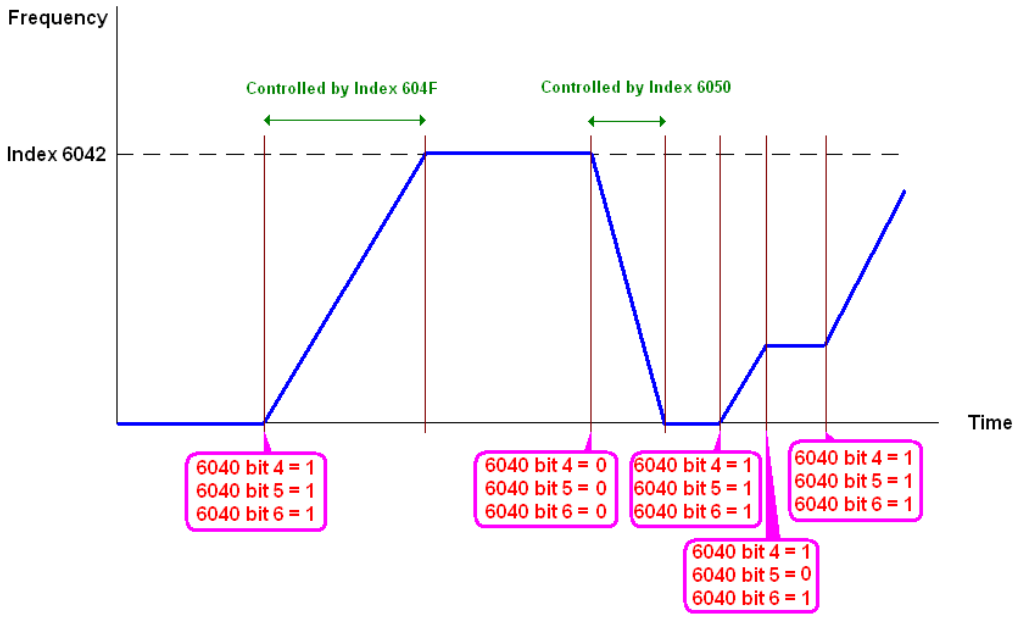

NOTE 01: Read 6043 to get the current rotation speed. (Unit: rpm)

NOTE 02: Read bit 10 of 6041 to check if the rotation speed has reached the targeting value. (0: Not reached; 1: Reached)

Torque mode

1. Set AC motor drive to the torque mode: set Index 6060 = 4.
   (The Index 6042 is available for speed limit under the torque control mode)
2. Switch to Operation Enable mode: set 6040 = 0xE, and then set 6040 = 0xF.
3. To set targeting torque: set 6071 as targeting torque and 6072 as the largest output torque.

Torque mode (Index 6060=4)	Index 6040			SUM
	bit6	bit5	bit4	
	X	X	X	RUN to reach the targeting torque.

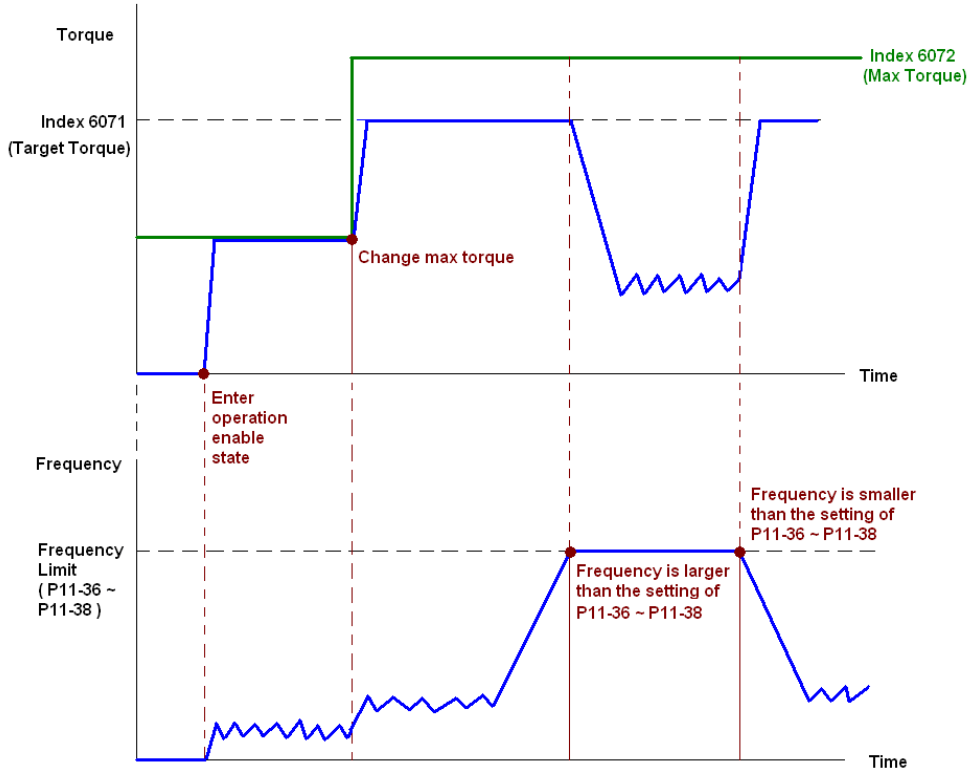

NOTE: The standard DS402 does not regulate the maximum speed limit. Therefore, if the motor drive defines the control mode of DS402, the highest speed will go with the setting of Pr.11-36 to Pr.11-38.

NOTE 01: Read 6077 to get the current torque. (Unit: 0.1%).

NOTE02: Read bit10 of 6041 to find if the torque has reached the targeting value. (0: Not reached; 1: Reached)

Position mode

1. Set the parameter of a trapezium curve to define position control (Pr.11-43 Max. Frequency of Point-to-Point Position Control, Pr.11-44 Accel. Time of Point-to-Point Position Control and Pr.11-45 Decel. Time of Point-to-Point Position Control)
2. Set C2000 to position control mode: set Index 6060 = 1.
3. Switch to Operation Enable mode: set 6040 = 0xE, and then set 6040 = 0xF.
4. Set targeting position: set 607A as the targeting position.
5. Trigger an ACK signal: set 6040 = 0x0F, and then set 6040 = 0x1F. (Pulse On).

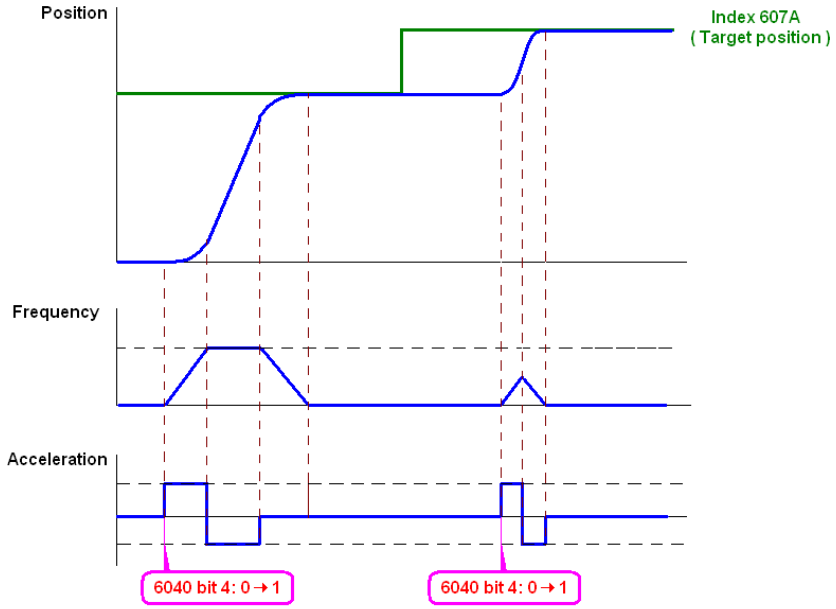

NOTE 01: Read 6064 to get the current position.

NOTE 02: Read bit10 of 6041 to find if the position reaches the targeting position. (0: Not reached, 1: reached)

NOTE 03: Read bit11 of 6041 to find if the position is over the limited area. (0: in the limit, 1: over the limit)

Home mode

1. Set Pr.00-12 to choose a home method.
2. Set the left and right limits correspond to the position of MI terminal.
3. Switch to Home mode: set Index 6060 = 6.
4. Switch to Operation Enable mode: set 6040 = 0xE, and then set 6040 = 0xF.
5. To trigger an ACK signal: set 6040 = 0x0F, and then set 6040 = 0x1F (Pulse On, and the motor drive will be back to home.)

NOTE 01: Read bit12 of 6041 to find if the home mode is completed. (0: Not reached, 1: reached)

15-3-3 Using the Delta Standard (Old definition, only supports speed mode)

15-3-3-1 Various mode control method (following the Delta old standard)

If you want to use the Delta old standard to control the motor drive, follow these steps:

1. Wire the hardware (refer to Section 15-2 Wiring for CANopen).
2. Set the operation source: set Pr.00-21 to 3 for CANopen communication card control. (Run/ stop, Forward/ reverse run…., etc.)
3. Set the frequency source: set Pr.00-20 to 6. Choose source for the Frequency command from the CANopen setting.
4. Set Delta Standard (Old definition, only supports speed mode) as the control mode: Pr.09-40 = 0 and Pr.09-30 = 0.
5. Set the CANopen station: set Pr.09-36; the range is among 1–127. When Pr.09-36=0, the CANopen slave function is disabled. Note: If an error appears (station address error CAdE or CANopen memory error CFrE) when you finish the station setting, set Pr.00-02 = 7 to reset.
6. Set the CANopen baud rate: set Pr.09-37 (CANBUS Baud Rate: 1Mbps(0), 500Kbps(1), 250Kbps(2), 125Kbps(3), 100Kbps(4) and 50Kbps(5))

15-3-3-2 The control method under speed mode

1. Set the target frequency: set 2020-02, the unit is Hz, with 2 decimal places. For example, 1000 is 10.00Hz.
2. Operation control: set 2020-01 = 0002H for running, and set 2020-01 = 0001H for stopping.

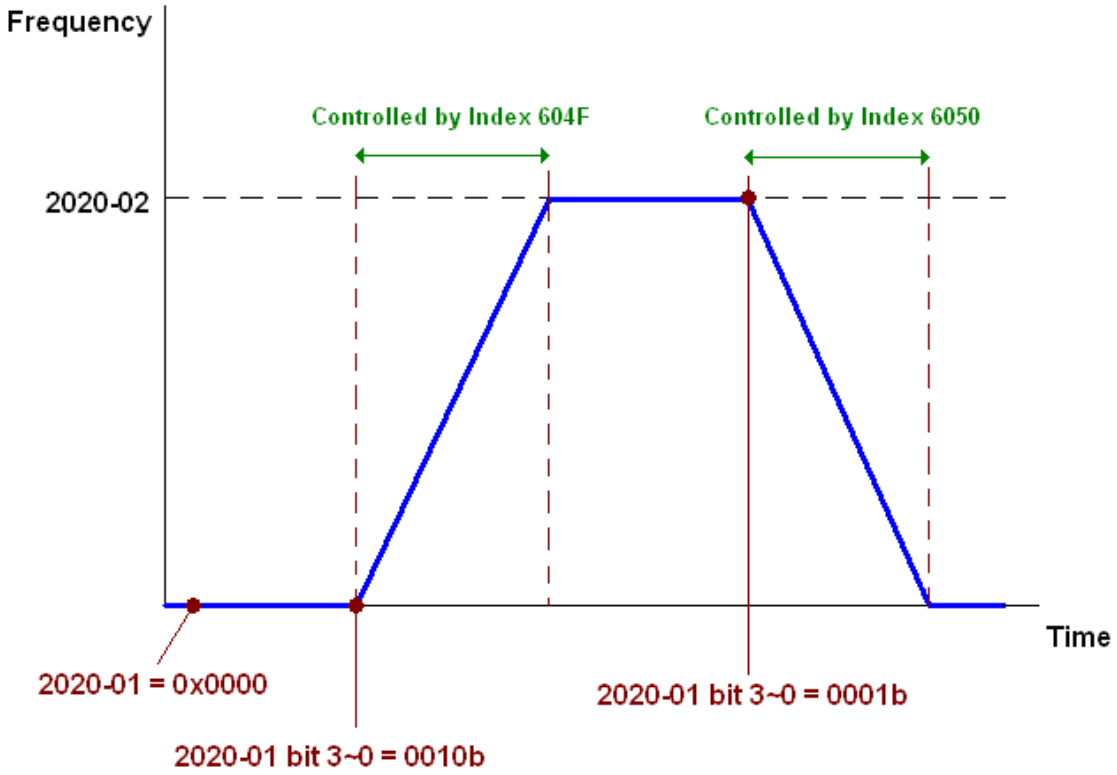

15-3-4 By Using Delta Standard (New Definition)

15-3-4-1 Related settings for an AC motor drive (Delta New Standard)

If you want to use the Delta new standard to control the motor drive, follow these steps:

1. Wire the hardware (refer to Section 15-2 Wiring for CANopen).
2. Set the operation source: set Pr.00-21 to 3 for CANopen communication card control. (Run/ stop, Forward/ reverse run…., etc.)
3. Set the frequency source: set Pr.00-20 to 6. Choose the source of the Frequency Command from CANopen setting.
4. Set the torque source: set Pr.11-33. Choose the source of the Torque Command from CANopen setting.)
5. Set the position source: set Pr.11-40=3. Choose the source of the Position Command from CANopen setting.)
6. Set Delta Standard (New definition) as the control mode: Pr.09-40 = 0 and Pr.09-30 = 0.
7. Set the CANopen station: set Pr.09-36; the range is among 1–127. When Pr.09-36=0, the CANopen slave function is disabled. (Note: If an error appears (station address error CAdE or CANopen memory error CFrE) when you finish the station setting, set Pr.00-02 = 7 to reset.
8. Set the CANopen baud rate: set Pr.09-37 (CANBUS Baud Rate: 1Mbps(0), 500Kbps(1), 250Kbps(2), 125Kbps(3), 100Kbps(4) and 50Kbps(5))

15-3-4-2 Various mode control method (Delta New Standard)

Speed Mode

1. Set C2000 to speed control mode: set Index6060 = 2.
2. 2. Set the target frequency: set 2060-03, unit is Hz, with 2 decimal places. For example, 1000 is 10.00Hz.
3. Operation control: set 2060-01 = 008H for Server on, and set 2060-01 = 0081H for running.

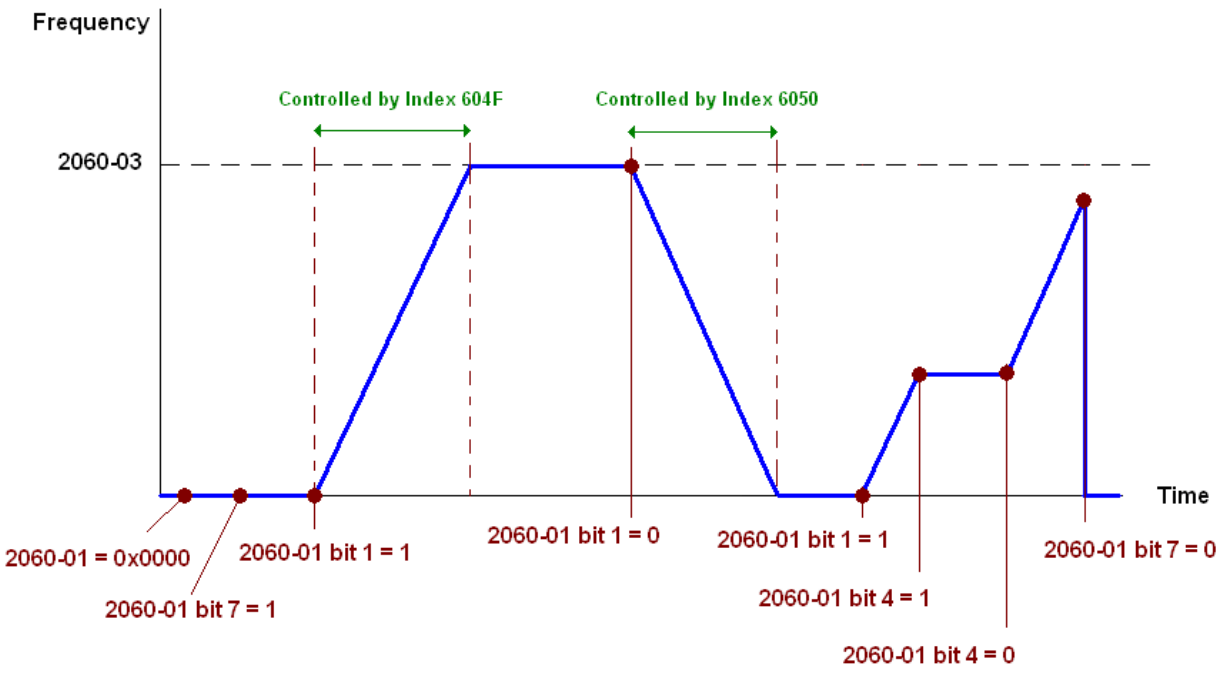

Torque Mode

1. Set C2000 to torque control mode: set Index 6060 = 4.
2. Set the target torque: set 2060-07, unit as %, and the value is one decimal place. For example, 100 is 10.0%.
3. Operation control: set 2060-01 = 0080H starts excitation, and the drive immediately runs at the target torque.

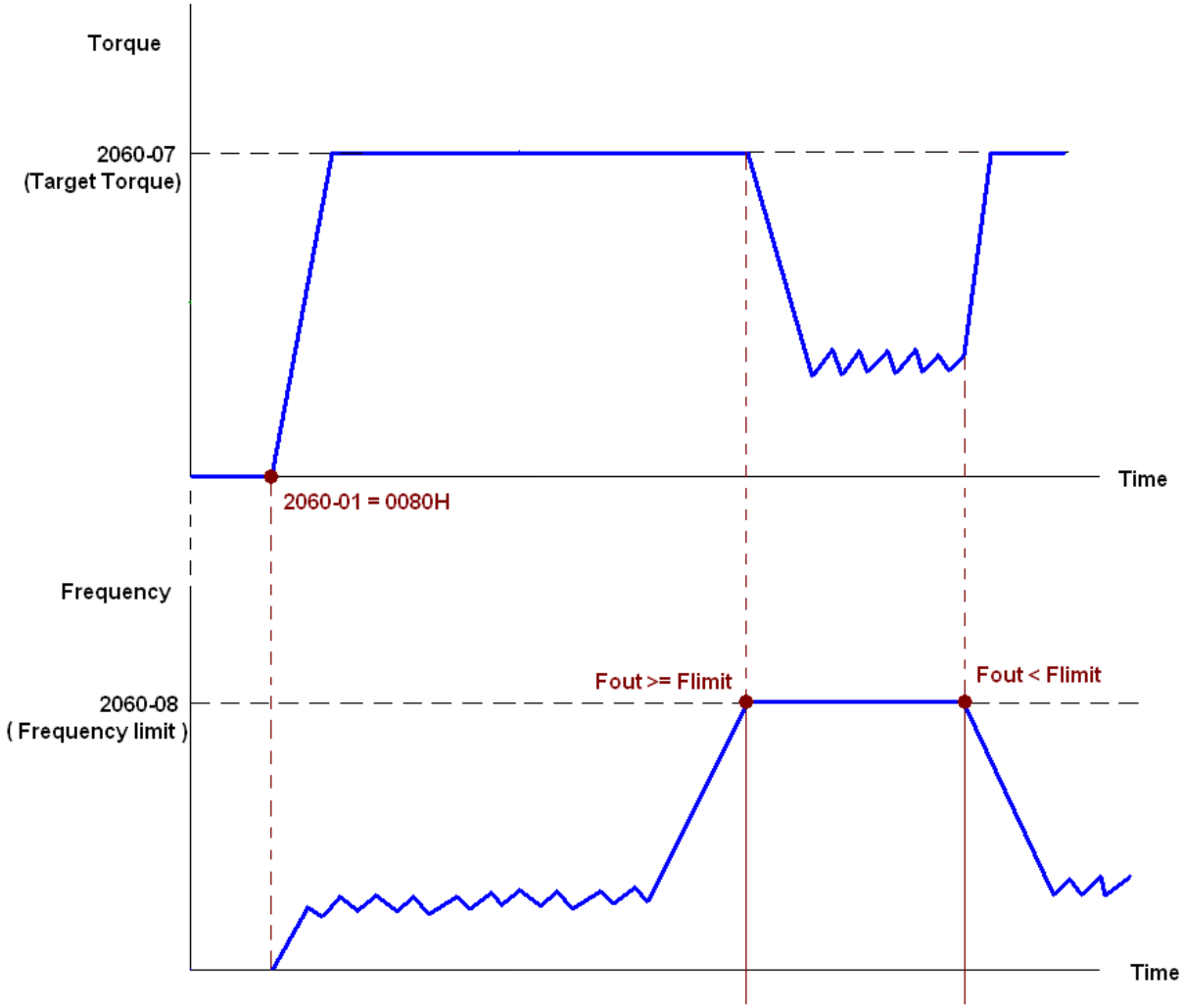

Note01: Read 2061-07 for the current torque (unit is 0.1%).

Note02: Read bit0 of 2061-01 to find if the torque has reached the set value (0: Not reached, 1: Reached).

Note 03: If the speed of the drive reaches the speed limit when torque outputs, you may reduce the output torque in order to ensure that the speed stays within the limits.

Position Mode

1. Set the parameter of a trapezium curve to define position control (Pr.11-43 Max. Position Control Frequency), Pr.11-44 Accel. Time of Position Control, Pr.11-45 Decel. Time of Position Control)
2. Set C2000 to position control mode, set Index 6060 = 1.
3. Set 2060-01 = 0080h, then motor drive starts excitation.
4. Set target position: set 2060-05 = target position.
5. Set 2060-01 =0081h to trigger the motor drive runs to the target position.
6. Repeat step 3 to step 5 to move to another position.

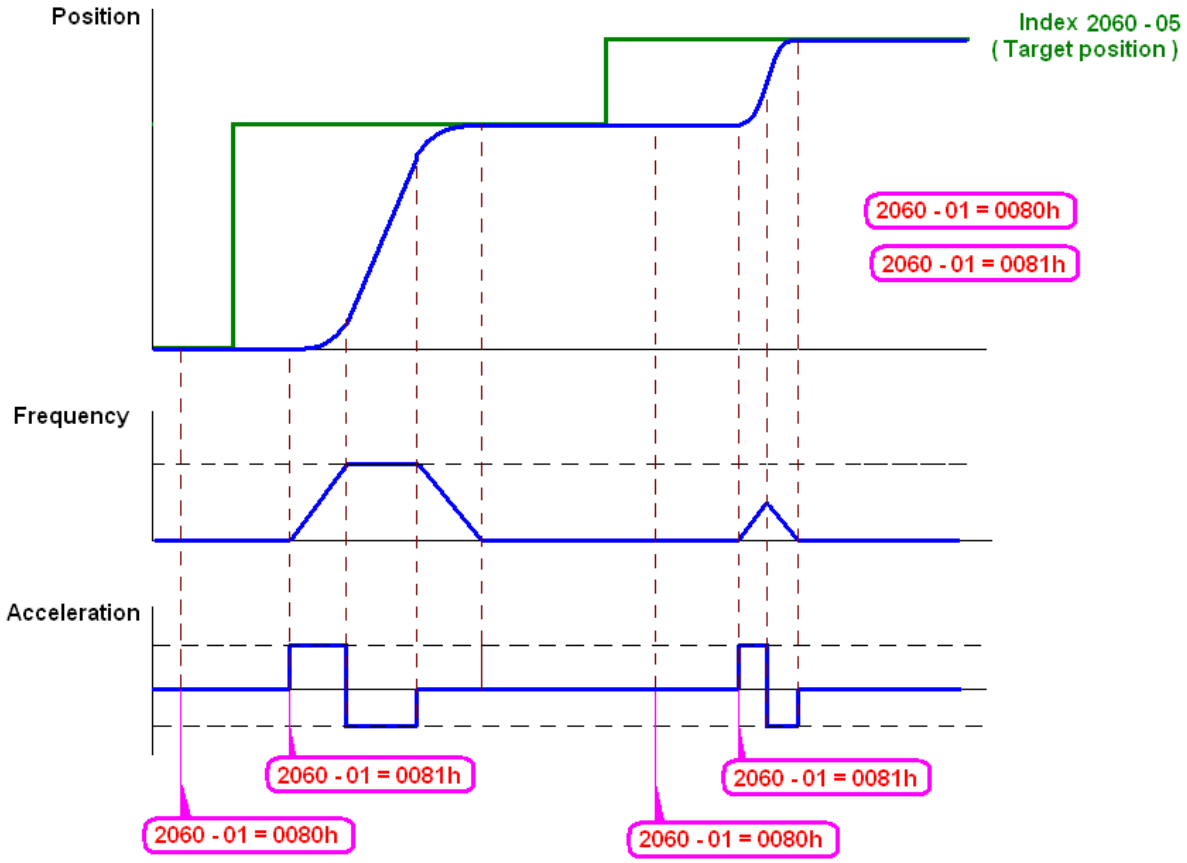

NOTE01: Read 2061-05 to get the current position.

NOTE02: Read bit0 of 2061 to find if the position has reached to the target position. (0: Not reached, 1: Reached).

Home Mode

1. Set Pr.00-12 to choose the method to return home.
2. 2. Set the left and right limits correspond to the position of MI terminal.
3. 3. Switch to home mode: set Index 6060 = 6.
4. 4. Set 2060-01 = 0080h, then the motor drive starts excitation.
5. 5. Set the ACK signal: set 2060-01 = 0081h, then the motor drive starts to go back home.

NOTE 01: Read bit12 of 6041 to find if returning home is completed. (0: Not reached, 1: Reached).

15-3-5 Control DI / DO / AI / AO through CANopen

To control the DO and AO of the motor drive through CANopen, follow the steps below:

1. Define the DO to be controlled by CANopen. For example, set Pr.02-14 to control RY2.
2. Define the AO to be controlled by CANopen. For example, set Pr.03-23 to control AFM2.
3. Control the Index mapped by CANopen. To control DO, use control index 2026-41. To control AO, you will need to control 2026-AX. To set RY2 as ON, set bit1 of Index 2026-41 =1, then RY2 outputs 1. To control AFM2 output = 50.00%, set Index 2026-A2 =5000, then AFM2 outputs 50%.

The following table shows the mapping of CANopen DI / DO / AI / AO:

DI:

Terminal	Related Parameters	R/W	Mapping Index
FWD	==	RO	2026-01 bit0
REV	==	RO	2026-01 bit1
MI1	==	RO	2026-01 bit2
MI2	==	RO	2026-01 bit3
MI3	==	RO	2026-01 bit4
MI4	==	RO	2026-01 bit5
MI5	==	RO	2026-01 bit6
MI6	==	RO	2026-01 bit7
MI7	==	RO	2026-01 bit8
MI8	==	RO	2026-01 bit9
MI10	==	RO	2026-01 bit10
MI11	==	RO	2026-01 bit11
MI12	==	RO	2026-01 bit12
MI13	==	RO	2026-01 bit13
MI14	==	RO	2026-01 bit14
MI15	==	RO	2026-01 bit15

DO:

Terminal	Related Parameters	R/W	Mapping Index
RY1	Pr.02-13 = 50	RW	2026-41 bit0
RY2	Pr.02-14 = 50	RW	2026-41 bit1
MO1	Pr.02-16 = 50	RW	2026-41 bit3
MO2	Pr.02-17 = 50	RW	2026-41 bit4
MO10	Pr.02-36 = 50	RW	2026-41 bit5
RY10			2026-41 bit5
MO11	Pr.02-37 = 50	RW	2026-41 bit6
RY11			2026-41 bit6
RY12	Pr.02-38 = 50	RW	2026-41 bit7
RY13	Pr.02-39 = 50	RW	2026-41 bit8
RY14	Pr.02-40 = 50	RW	2026-41 bit9
RY15	Pr.02-41 = 50	RW	2026-41 bit10

AI:

Terminal	Related Parameters	R/W	Mapping Index
AVI	==	RO	Value of 2026-61
ACI	==	RO	Value of 2026-62
AUI	==	RO	Value of 2026-63

AO:

Terminal	Related Parameters	R/W	Mapping Index
AFM1	Pr.03-20 = 20	RW	Value of 2026-A1
AFM2	Pr.03-23 = 20	RW	Value of 2026-A2

15-4 CANopen Supported Index

C2000 Supported Parameter Index:

The parameter index corresponds as shown in this example:

Index	**sub-Index**
2000H + Group	member+1

For example:

Pr.10-15 (Encoder Stall and Slip Error Action)

Group		**member**
10(0AH)	-	15(0FH)

Index = 2000H + 0AH = 200A

Sub Index = 0FH + 1H = 10H

C2000 Supported Control Index:

Delta Standard Mode (Old Definition)

Index	Sub	Definition	Default	R/W	Size	Note	
2020H	0	Number	3	R	U8		
	1	Control word	0	RW	U16	bit1–0	00B: Disable
							01B: Stop
							10B: Disable
							11B: JOG Enable
						bit3–2	Reserved
						bit5–4	00B:disable
							01B: Direction forward
							10B: Reverse
							11B: Switch Direction
						bit7–6	00B: 1st step Accel. /Decel.
							01B: 2nd step Accel. /Decel.
							10B: 3rd step Accel. /Decel.
							11B: 4th step Accel. /Decel.
						bit11–8	0000B: Master speed
							0001B: 1st step speed
							0010B: 2nd step speed
							0011B: 3rd step speed
							0100B: 4th step speed
							0101B: 5th step speed
							0110B: 6th step speed
							0111B: 7th step speed
							1000B: 8th step speed
							1001B: 9th step speed
							1010B: 10th step speed
							1011B: 11th step speed
							1100B: 12th step speed
							1101B: 13th step speed
							1110B: 14th step speed
							1111B: 15th step speed
						bit12	1: Enable the function of bit6-11
						bit 15	Reserved
	2	Freq. command (XXX.XXHz)	0	RW	U16		

Index	Sub	Definition	Default	R/W	Size	Note	
	3	Other trigger	0	RW	U16	bit0	1: E.F. ON
						bit1	1: Reset
						bit2	1: Base Block (B.B) ON
						bit15–3	Reserved
2021H	0	Number	10	R	U8		
	1	Error code	0	R	U16	High byte: Warning Code Low byte: Error Code	
	2	AC motor drive status	0	R	U16	bit1–0	00B: stop
							01B: decelerate to stop
							10B: waiting for operation command
							11B: in operation
						bit2	1: JOG command
						bit4–3	00B: Run forward
							01B: switch from run in reverse to run forward
							10B: switch from run forward to run in reverse
							11B: Run in reverse
						bit7–5	Reserved
						bit8	1: Master Frequency command controlled by communication interface
						bit9	1: Master Frequency command controlled by analog signal input
						bit10	1: Operation command controlled by communication interface
						bit11	1: Parameter lock
						bit12	1: Enable the digital keypad copy parameter function
						bit15–13	Reserved
	3	Freq. command (XXX.XXHz)	0	R	U16		
	4	Output freq. (XXX.XXHz)	0	R	U16		
	5	Output current (XX.XA)	0	R	U16		
	6	DC bus voltage (XXX.XV)	0	R	U16		
	7	Output voltage (XXX.XV)	0	R	U16		
	8	The current step run by the multi- step speed commend	0	R	U16		
	9	Reserved	0	R	U16		
	A	Display counter value（c）	0	R	U16		
	B	Display output power factor angle (XX.X°)	0	R	U16		
	C	Display output torque (XXX.X%)	0	R	U16		
	D	Display actual motor speed (rpm)	0	R	U16		
	E	Number of PG feedback pulses (0–65535)	0	R	U16		
	F	Number of PG2 pulse commands (0–65535)	0	R	U16		
	10	Power output (X.XXXkWh)	0	R	U16		
	17	Multi-function display (Pr.00-04)	0	R	U16		
2022H	0	Reserved	0	R	U16		
	1	Display the drive’s output current	0	R	U16		
	2	Counter value	0	R	U16		

Index	Sub	Definition	Default	R/W	Size	Note
	3	Actual output frequency (XXX.XXHz)	0	R	U16	
	4	DC bus voltage (XXX.XV)	0	R	U16	
	5	Output voltage (XXX.XV)	0	R	U16	
	6	Power factor angle (XX.X°)	0	R	U16	
	7	Display the output power of U, V, W in kW	0	R	U16	
	8	Display the motor speed estimated by the drive or encoder feedback in rpm	0	R	U16	
	9	Display the positive / negative output torque estimated by the drive (+0.0: positive torque; -0.0: negative torque)	0	R	U16	
	A	Display PG feedback	0	R	U16	
	B	Display the PID feedback value after enabling PID function in %	0	R	U16	
	C	Display the AVI analog input terminal signal, 0–10 V corresponds to 0.00–100.00% (see Explanation 2 in Pr.00-04)	0	R	U16	
	D	Display the ACI analog input terminal signal, 4–20 mA / 0–10 V corresponds to 0–100% (2.) (see Explanation 2 in Pr.00-04)	0	R	U16	
	E	Display the AUI analog input terminal signal, -10–10V corresponds to -100–100% (see Explanation 2 in Pr.00-04)	0	R	U16	
	F	IGBT temperature of the power module in °C	0	R	U16	
	10	Display the temperature of capacitance in °C	0	R	U16	
	11	The digital input status (ON / OFF), refer to Pr.02-12 (see Explanation 3 in Pr.00-04)	0	R	U16	
	12	The digital output status (ON / OFF), refer to Pr.02-18 (see Explanation 4 in Pr.00-04)	0	R	U16	
	13	Current step for the multi-step speed operation	0	R	U16	
	14	The corresponding CPU digital input pin status (d.) (see Explanation 3 in Pr.00-04)	0	R	U16	
	15	The corresponding CPU digital output pin status (O.) (see Explanation 4 in Pr.00-04)	0	R	U16	

Index	Sub	Definition	Default	R/W	Size	Note
	16	Number of actual motor revolutions (PG1 of PG card). Starts from 9 when the actual operation direction is changed, or the keypad display at stop is 0. Max. is 65535	0	R	U16	
	17	Pulse input frequency (PG2 of the PG card)	0	R	U16	
	18	Pulse input position (PG card PG2), maximum setting is 65535.	0	R	U16	
	19	Position command tracing error	0	R	U16	
	1A	Counter value of overload (0.00–100.00%)	0	R	U16	
	1B	Display GFF in %	0	R	U16	
	1C	Display DC bus voltage ripples (Unit: V_{DC})	0	R	U16	
	1D	PLC register D1043 data	0	R	U16	
	1E	Magnetic field area of the synchronous motor	0	R	U16	
	1F	User page displays the value in physical measure	0	R	U16	
	20	Output Value of Pr.00-05	0	R	U16	
	21	Number of motor turns when drive operates	0	R	U16	
	22	Operation position of motor	0	R	U16	
	23	Fan speed of the drive	0	R	U16	
	24	Control mode of the drive 0: speed mode 1: torque mode	0	R	U16	
	25	Carrier frequency of the drive	0	R	U16	
	26	Reserved				
	27	Motor status				
	28	Output positive/ negative torque of motor drive calculation				
	29	Torque command				
	2A	kWh display				
	2B	PG2 pulse input low-word				
	2C	PG2 pulse input high-word				
	2D	Motor actual position low-word				
	2E	Motor actual position high-word				
	2F	PID target value				
	30	PID offset				
	31	PID output frequency				

CANopen Remote IO Mapping

Index	Sub	R/W	Definition
2026H	01h	R	Each bit corresponds to the different input terminals
	02h	R	Each bit corresponds to the different input terminals
	03h–40h	R	Reserved
	41h	RW	Each bit corresponds to the different output terminals
	42h–60h	R	Reserved
	61h	R	AVI proportional value (%)
	62h	R	ACI proportional value (%)
	63h	R	AUI proportional value (%)
	64h–6Ah	R	Reserved

Index	Sub	R/W	Definition
	6Bh	R	Extension card AI10, 0.0–100.0% (EMC-A22A)
	6Ch	R	Extension card AI11, 0.0–100.0% (EMC-A22A)
	6Dh–A0h	R	Reserved
	A1h	RW	AFM1 output proportional value (%)
	A2h	RW	AFM2 output proportional value (%)
	A3h–AAh	RW	Reserved
	ABh	RW	Extension card AO10, 0.0–100.0% (EMC-A22A)
	ACh	RW	Extension card AO11, 0.0–100.0% (EMC-A22A)

Index 2026-01	bit0	bit1	bit2	bit3	bit4	bit5	bit6	bit7	bit8	bit9	bit10	bit11	bit12	bit13	bit14	bit15
1	FWD	REV	MI1	MI2	MI3	MI4	MI5	MI6	MI7	MI8						
2											MI10	MI11	MI12	MI13	MI14	MI15
3											MI10	MI11	MI12	MI13		

1: Control broad I/O (Standard)

2: Add external card, EMC-D611A

3: Add external card, EMC-D42A

Index 2026-41	bit0	bit1	bit2	bit3	bit4	bit5	bit6	bit7	bit8	bit9	bit10	bit11	bit12	bit13	bit14	bit15
1	RY1	RY2		MO1	MO2											
2						MO10	MO11									
3						RY10	RY11	RY12	RY13	RY14	RY15					

1: Control broad I/O (Standard)

2: Add external card, EMC-D42A

3: Add external card, EMC-R6AA

Delta Standard Mode (New Definition)

Index	sub	R/W	Size	Descriptions			Speed Mode	Position Mode	Home Mode	Torque Mode
				bit	Definition	Priority				
2060h	00h	R	U8						0: Stop Homing	
	01h	RW	U16	0	Ack	4	0: fcmd =0 1: fcmd = Fset(Fpid)	Pulse 1: Position control	Pulse 1: Return to home	
				1	Dir	4	0: FWD run command 1: REV run command			
				2				0: Relative move 1: Absolute move		
				3	Halt	3	0: drive run till target speed is attained 1: drive stop by deceleration setting			The torque target of internal decoding is set as 0, but the display of outside torque target will remain its outside setting.
				4	Hold	4	0: drive run till target speed is attained 1: frequency stop at current frequency			
				5	JOG	4	0: JOG OFF Pulse 1: JOG RUN			
				6	Qstop	2	Quick Stop	Quick Stop	Quick Stop	Quick Stop
				7	Power	1	0: Power OFF 1: Power ON	0: Power OFF 1: Power ON	0: Power OFF 1: Power ON	0: Power OFF 1: Power ON
				8	Reserved					

Index	sub	R/W	Size	Descriptions			Speed Mode	Position Mode	Home Mode	Torque Mode
				bit	Definition	Priority				
				9	Ext Cmd2	4	0→1: Absolute position cleared	0->1: Absolute position cleared	0->1: Absolute position cleared	0->1: Absolute position cleared
				10–14	Reserved					
				15	RST		Pulse 1: Fault code cleared	Pulse 1: Fault code cleared	Pulse 1: Fault code cleared	Pulse 1: Fault code cleared
	02h	RW	U16		Mode Cmd		0: Speed mode	1: P2P position mode	3: Home mode	2: Torque mode
	03h	RW	U16				Speed command (unsigned decimal)			
	04h	RW	U16							
	05h	RW	S32					Position command		
	06h	RW								
	07h	RW	U16							Torque command (signed decimal)
	08h	RW	U16							Speed limit (unsigned decimal)
2061h	01h	R	U16	0	Arrive		Frequency command reached	Position attained	Homing complete	Torque attained
				1	Dir		0: Motor FWD run 1: Motor REV run	0: Motor FWD run 1: Motor REV run	0: Motor FWD run 1: Motor REV run	0: Motor FWD run 1: Motor REV run
				2	Warn		Warning occurs	Warning	Warning	Warning
				3	Error		Error detected	Error detected	Error detected	Error detected
				4						
				5	JOG		JOG	JOG	JOG	JOG
				6	Qstop		Quick stop	Quick stop	Quick stop	Quick stop
				7	Power On		Switch ON	Switch ON	Switch ON	Switch ON
				15–8						
	02h	R								
	03h	R	U16				Actual output frequency	Actual output frequency	Actual output frequency	Actual output frequency
	04h	R								
	05h	R	S32				Actual position (absolute)	Actual position (absolute)	Actual position (absolute)	Actual position (absolute)
	06h	R								
	07h	R	S16				Actual torque	Actual torque	Actual torque	Actual torque

CANopen built-in PLC register D mapping（from D900–D999 mapping to 3000H–3063H）

Index	Sub	Property	Definition
3000	0	RW	PLC D900
3001	0	RW	PLC D901
3002	0	RW	PLC D902
…	…	RW	…
3063	0	RW	PLC D999

DS402 Standard

Index	Sub	Definition	Default	R/W	Size	Unit	PDO Map	Mode	Note
6007H	0	Abort connection option code	2	RW	S16		Yes		0：No action 2：Disable Voltage 3：quick stop
603FH	0	Error code	0	R0	U16		Yes		
6040H	0	Control word	0	RW	U16		Yes		
6041H	0	Status word	0	R0	U16		Yes		
6042H	0	vl target velocity	0	RW	S16	rpm	Yes	vl	
6043H	0	vl velocity demand	0	RO	S16	rpm	Yes	vl	
6044H	0	vl control effort	0	RO	S16	rpm	Yes	vl	
604FH	0	vl ramp function time	10000	RW	U32	ms	Yes	vl	Unit must be 100 ms, and check if the setting is 0.
6050H	0	vl slow down time	10000	RW	U32	ms	Yes	vl	
605AH	0	Quick stop option code	2	RW	S16		No		0：disable drive function 1：slow down on slow down ramp 2：slow down on quick stop ramp 5：slow down on slow down ramp and stay in QUICK STOP 6：slow down on quick stop ramp and stay in QUICK STOP
605CH	0	Disable operation option code	1	RW	S16		No		0：Disable drive function 1：Slow down with slow down ramp; disable of the drive function
6060H	0	Mode of operation	2	RW	S8		Yes		1：Profile Position Mode 2：Velocity Mode 4：Torque Profile Mode 6：Homing Mode
6061H	0	Mode of operation display	2	RO	S8		Yes		Same as above
6062H	0	Position demand value	0	RO	S32	pulse	Yes		
6064H	0	Position actual value	0	RO	S32	pulse	Yes		
6065H	0	Following error window	1000	RW	U32	pulse	Yes		
6067H	0	Position window	10	RW	U32	pulse	Yes		
6068H	0	Position window time	500	RW	U16	ms	Yes		
6071H	0	Target torque	0	RW	S16	0.1%	Yes	tq	Valid unit: 1%
6072H	0	Max torque	1500	RW	U16	0.1%	Yes	tq	Valid unit: 1%
6075H	0	Motor rated current	0	RO	U32	mA	No	tq	
6077H	0	Torque actual value	0	RO	S16	0.1%	Yes	tq	
6078H	0	Current actual value	0	RO	S16	0.1%	Yes	tq	
6079H	0	DC link circuit voltage	0	RO	U32	mV	No	tq	
607AH	0	Target position	0	RW	S32	pulse	Yes		
607CH	0	Home offset	0	RW	S32	pulse	Yes		
607DH	1	Min position limit	-72000000	RW	S32	pulse	Yes		
607DH	2	Max position limit	72000000	RW	S32	pulse	Yes		
6081H	0	Profile velocity	72000	RW	U32	pulse/sec	Yes		
6083H	0	Profile acceleration	72000	RW	U32	pulse/sec²	Yes		
6084H	0	Profile deceleration	72000	RW	U32	pulse/sec²	Yes		
6085H	0	Quick stop deceleration	72000	RW	U32	pulse/sec²	Yes		
6098H	0	Homing method	35	RW	S8		Yes		
6099H	1	Homing speed during search for switch	9600	RW	U32	pulse/sec	Yes		
6099H	2	Homing speed during search for zero	2400	RW	U32	pulse/sec	Yes		
609AH	0	Homing acceleration	960	RW	U32	pulse/sec²	Yes		
60F4H	0	Following error actual value	0	RW	S16	pulse	Yes		

15-5 CANopen Fault Code

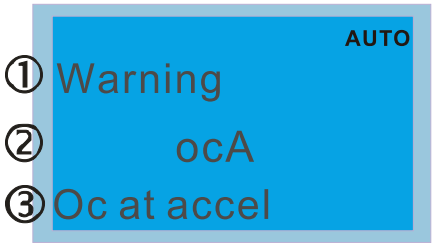

① Display error signal
② Abbreviate error code
③ Display error description

- Refer to settings for Pr.06-17–Pr.06-22
- Refer to Chapter 14 Fault Codes and Descriptions for detailed descriptions.

Setting *	Display	Fault code	Description	CANopen fault register (bit 0–7)	CANopen fault code
1	AUTO Fault ocA Oc at accel	0001H	Over-current during acceleration	1	2213H
2	AUTO Fault ocd Oc at decel	0002H	Over-current during deceleration	1	2213H
3	AUTO Fault ocn Oc at normal SPD	0003H	Over-current during steady operation	1	2314H
4	AUTO Fault GFF Ground fault	0004H	Ground fault	1	2240H
5	AUTO Fault occ Short Circuit	0005H	IGBT short circuit between upper bridge and lower bridge	1	2250H
6	AUTO Fault ocS Oc at stop	0006H	Over-current at stop	1	2214H
7	AUTO Fault ovA Ov at accel	0007H	Over-voltage during acceleration	2	3210H
8	AUTO Fault ovd Ov at decel	0008H	Over-voltage during deceleration	2	3210H

Setting *	Display	Fault code	Description	CANopen fault register (bit 0–7)	CANopen fault code
9	AUTO Fault ovn Ov at normal SPD	0009H	Over-voltage at constant speed	2	3210H
10	AUTO Fault ovS Ov at stop	000AH	Over-voltage at stop	2	3210H
11	AUTO Fault LvA Lv at accel	000BH	Low-voltage during acceleration	2	3220H
12	AUTO Fault Lvd Lv at decel	000CH	Low-voltage during deceleration	2	3220H
13	AUTO Fault Lvn Lv at normal SPD	000DH	Low-voltage at constant speed	2	3220H
14	AUTO Fault LvS Lv at stop	000EH	Low-voltage at stop	2	3220H
15	AUTO Fault OrP Phase lacked	000FH	Phase loss protection	2	3130H
16	AUTO Fault oH1 IGBT over heat	0010H	IGBT overheating	3	4310H
17	AUTO Fault oH2 Heat Sink oH	0011H	Heatsink overheating	3	4310H
18	AUTO Fault tH1o Thermo 1 open	0012H	IGBT temperature detection failure	3	FF00H
19	AUTO Fault tH2o Thermo 2 open	0013H	Capacitor hardware error	3	FF01H

Setting *	Display	Fault code	Description	CANopen fault register (bit 0–7)	CANopen fault code
21	AUTO Fault oL Over load	0015H	Over load	1	2310H
22	AUTO Fault EoL1 Thermal relay 1	0016H	Electronic thermal relay 1 protection	1	2310H
23	AUTO Fault EoL2 Thermal relay 2	0017H	Electronic thermal relay 2 protection	1	2310H
24	AUTO Fault oH3 Motor over heat	0018H	Motor overheating	3	FF20H
26	AUTO Fault ot1 Over torque 1	001AH	Over torque 1	3	8311H
27	AUTO Fault ot2 Over torque 2	001BH	Over torque 2	3	8311H
28	AUTO Fault uC Under current	001CH	Under current	1	8321H
29	AUTO Fault LMIT Limit Error	001DH	Limit Error	1	7320H
30	AUTO Fault cF1 EEPROM write err	001EH	EEPROM write error	5	5530H
31	AUTO Fault cF2 EEPROM read err	001FH	EEPROM read error	5	5530H
33	AUTO Fault cd1 Ias sensor err	0021H	U-phase error	1	FF04H

Setting *	Display	Fault code	Description	CANopen fault register (bit 0–7)	CANopen fault code
34	AUTO Fault cd2 Ibs sensor err	0022H	V-phase error	1	FF05H
35	AUTO Fault cd3 Ics sensor err	0023H	W-phase error	1	FF06H
36	AUTO Fault Hd0 cc HW error	0024H	cc hardware error	5	FF07H
37	AUTO Fault Hd1 Oc HW error	0025H	oc hardware error	5	FF08H
38	AUTO Fault Hd2 Ov HW error	0026H	ov hardware error	5	FF09H
39	AUTO Fault Hd3 occ HW error	0027H	occ hardware error	5	FF0AH
40	AUTO Fault AUE Auto tuning error	0028H	Auto-tuning error	1	FF21H
41	AUTO Fault AFE PID Fbk error	0029H	PID loss ACI	7	FF22H
42	AUTO Fault PGF1 PG Fbk error	002AH	PG feedback error	7	7301H
43	AUTO Fault PGF2 PG Fbk loss	002BH	PG feedback loss	7	7301H
44	AUTO Fault PGF3 PG Fbk over SPD	002CH	PG feedback stall	7	7301H

Setting *	Display	Fault code	Description	CANopen fault register (bit 0–7)	CANopen fault code
45	AUTO Fault PGF4 PG Fbk deviate	002DH	PG slip error	7	7301H
46	AUTO Fault PGr1 PG Ref error	002EH	PGr1 PG ref input error (applied to 575V / 690V)	7	FF23H
47	AUTO Fault PGr2 PG Ref loss	002FH	PGr2 PG ref killed line (applied to 575V / 690V)	7	FF24H
48	AUTO Fault ACE ACI loss	0030H	ACI loss	1	FF25H
49	AUTO Fault EF External fault	0031H	External fault	5	9000H
50	AUTO Fault EF1 Emergency stop	0032H	Emergency stop	5	9000H
51	AUTO Fault bb Base block	0033H	External base block	5	9000H
52	AUTO Fault Pcod Password error	0034H	Password is locked	5	FF26H
53	AUTO Fault ccod SW Code Error	0035H	SW Code Error	5	6100H
54	AUTO Fault CE1 PC err command	0036H	Illegal command	4	7500H
55	AUTO Fault CE2 PC err address	0037H	Illegal data address	4	7500H

Setting *	Display	Fault code	Description	CANopen fault register (bit 0–7)	CANopen fault code
56	AUTO Fault CE3 PC err data	0038H	Illegal data value	4	7500H
57	AUTO Fault CE4 PC slave fault	0039H	Data is written to read-only address	4	7500H
58	AUTO Fault CE10 PC time out	003AH	Modbus transmission time-out	4	7500H
60	AUTO Fault bF Braking fault	003CH	Brake transistor error	5	7110H
61	AUTO Fault ydc Y-delta connect	003DH	Y-connection / Δ-connection switch error	2	3330H
62	AUTO Fault dEb Dec. Energy back	003EH	Deceleration energy backup error	2	FF27H
63	AUTO Fault oSL Over slip error	003FH	Over slip error	7	FF28H
64	AUTO Fault ryF MC Fault	0040H	Electric valve switch error	5	7110H
65	AUTO Fault PGF5 PG HW Error	0041H	Hardware error of PG card	5	FF29H
68	AUTO Fault SdRv SpdFbk Dir Rev	0044H	Reverse direction of the speed feedback	0	8400H
69	AUTO Fault SdOr SpdFbk over SPD	0045H	Over speed rotation feedback	0	8400H

Setting *	Display	Fault code	Description	CANopen fault register (bit 0–7)	CANopen fault code
70	AUTO Fault SdDe SpdFbk deviate	0046H	Large deviation of speed feedback	0	8400H
71	AUTO Fault WDTT Watchdog	0047H	Watchdog (applied to 230V / 460V)	1	6010H
72	AUTO Fault STL1 STO Loss 1	0048H	STO Loss 1	5	FF30H
73	AUTO Fault S1 S1-emergy stop	0049H	Emergency stop for external safety	5	FF2AH
75	AUTO Fault Brk EXT-Brake Error	004BH	External brake error (applied to 230V / 460V)	5	7110H
76	AUTO Fault STO STO	004CH	STO	5	FF31H
77	AUTO Fault STL2 STO Loss 2	004DH	STO Loss 2	5	FF32H
78	AUTO Fault STL3 STO Loss 3	004EH	STO Loss 3	5	FF33H
82	AUTO Fault OPHL U phase lacked	0052H	Output phase loss U phase	2	2331H
83	AUTO Fault OPHL V phase lacked	0053H	Output phase loss V phase	2	2332H
84	AUTO Fault OPHL W phase lacked	0054H	Output phase loss W phase	2	2333H

Setting *	Display	Fault code	Description	CANopen fault register (bit 0–7)	CANopen fault code
85	AUTO Fault AboF PG ABZ Line off	0055H	PG ABZ line off	7	7301H
86	AUTO Fault UvoF PG UVW Line off	0056H	PG UVW line off	7	7301H
87	AUTO Fault oL3 Derating Error	0057H	Overload protection at low frequency	0	8A00H
89	AUTO Fault RoPd Rotor Pos. Error	0059H	Rotor position detection error	0	8A00H
90	AUTO Fault Fstp Force Stop	005AH	Force to stop	7	FF2EH
92	AUTO Fault LEr Pul. Tun. L Err	005CH	Pulse Tuning Inductance (L) Error	n/a	0
93	AUTO Fault TRAP CPU Trap 0 error	005BH	CPU error 0 (applied to 230V / 460V)	7	6000H
101	AUTO Fault CGdE Guarding T-out	0065H	CANopen guarding error	4	8130H
102	AUTO Fault CHbE Heartbeat T-out	0066H	CANopen heartbeat error	4	8130H
104	AUTO Fault CbFE Can bus off	0068H	CANopen bus off error	4	8140H
105	AUTO Fault CIdE Can bus Index Err	0069H	CANopen index error	4	8100H

Setting *	Display	Fault code	Description	CANopen fault register (bit 0–7)	CANopen fault code
106	AUTO Fault CAdE Can bus Add. Err	006AH	CANopen station address error	4	8100H
107	AUTO Fault CFrE Can bus off	006BH	CANopen memory error	4	8100H
111	AUTO Fault ictE InrCom Time Out	006FH	InrCOM time-out error	4	7500H
112	AUTO Fault SfLK PMLess Shaft Lock	0070H	PMLess shaft lock	0	8A00H
142	AUTO Fault AUE1 Auto tuning Err	008EH	Auto-tune error 1 (applied to 230V / 460V)	1	FF3DH
143	AUTO Fault AUE2 Auto tuning Err	008FH	Auto-tune error 2 (applied to 230V / 460V)	1	FF3EH
144	AUTO Fault AUE3 Auto tuning Err	0090H	Auto-tune error 3 (applied to 230V / 460V)	1	FF3FH
148	AUTO Fault AUE4 Auto tuning Err	0094H	Auto-tune error 4 (applied to 230V / 460V)	1	FF43H
171	AUTO Fault oPEE Over Pos Err Lim	00ABh	Over Position Error Limit	n/a	0

15-6 CANopen LED Function

There are two CANopen flash signs: RUN and ERR.

RUN LED:

LED status	Condition	CANopen State
OFF	OFF	Initial
Blinking	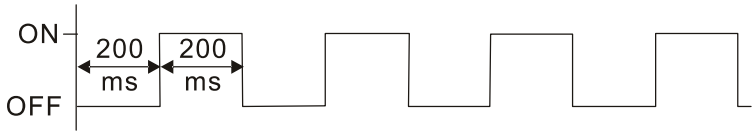	Pre-Operation
Single flash	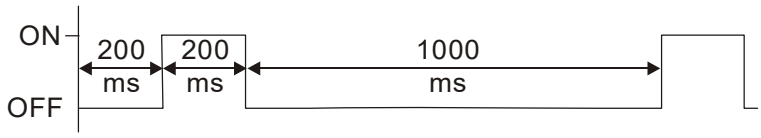	Stopped
ON	ON	Operation

ERR LED:

LED status	Condition / Status
OFF	No Error
Single flash	At least one CANopen packet failure 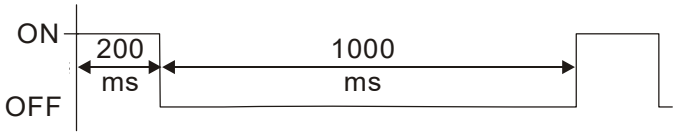
Double flash	Guarding failure or heartbeat failure 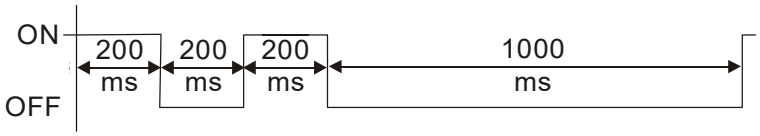
Triple flash	SYNC failure 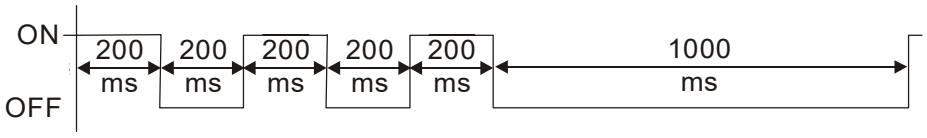
ON	Bus off

[This page intentionally left blank]

Chapter 16 PLC Function Applications

16-1 PLC Summary

16-2 Notes before PLC use

16-3 Turn on

16-4 Basic principles of PLC ladder diagrams

16-5 Various PLC device functions

16-6 Introduction to the Command Window

16-7 Error display and handling

16-8 CANopen Master control applications

16-9 Explanation of various PLC mode controls (speed, torque, homing, and position)

16-10 Internal communications main node control

16-11 Count function using MI8

16-12 Modbus remote IO control applications (use MODRW)

16-13 Calendar Function

16-1 PLC Summary

16-1-1 Introduction

The commands provided by the C2000 Plus's built-in PLC functions, including the ladder diagram editing tool WPLSoft, as well as the usage of basic commands and applications commands, chiefly retain the operating methods of Delta's PLC DVP series.

16-1-2 WPLSoft ladder diagram editing tool

WPLSoft is Delta's program editing software for the DVP and C2000 Plus programmable controllers in the Windows operating system environment. Apart from general PLC program design general Windows editing functions (such as cut, paste, copy, multiple windows, etc.), WPLSoft also provides many Chinese/ English annotation editing and other convenience functions (such as registry editing, settings, file reading, saving, and contact graphic monitoring and settings, etc.).

The following basic requirements that need to install WPLSoft editing software:

Item	System requirements
Operating system	Windows 95/98/2000/NT/ME/XP
CPU	At least Pentium 90
Memory	At least 16MB (we recommend at least 32MB)
Hard drive	Hard drive capacity: at least 100MB free space One optical drive (for use in installing this software)
Display	Resolution: 640×480, at least 16 colors; it is recommended that the screen area be set at 800×600 pixels
Mouse	Ordinary mouse or Windows-compatible device
Printer	Printer with a Windows driver program
RS-485 port	Must have at least an RS-485 port to link to the PLC
Suitable PLC models	Delta's full DVP-PLC series, C2000 / C2000 Plus series

16-2 Notes before PLC use

1. The PLC has a preset communications format of 7, N, 2, 9600, with node 2; the PLC node can be changed in Pr. 09-35, but this address may not be the same as the drive's address setting of Pr. 09-00.
2. C2000 Plus provides 2 communications serial ports that can be used to download PLC programs (see figure below). Channel 1 has a fixed communications format of 19200, 8, N, 2 RTU.

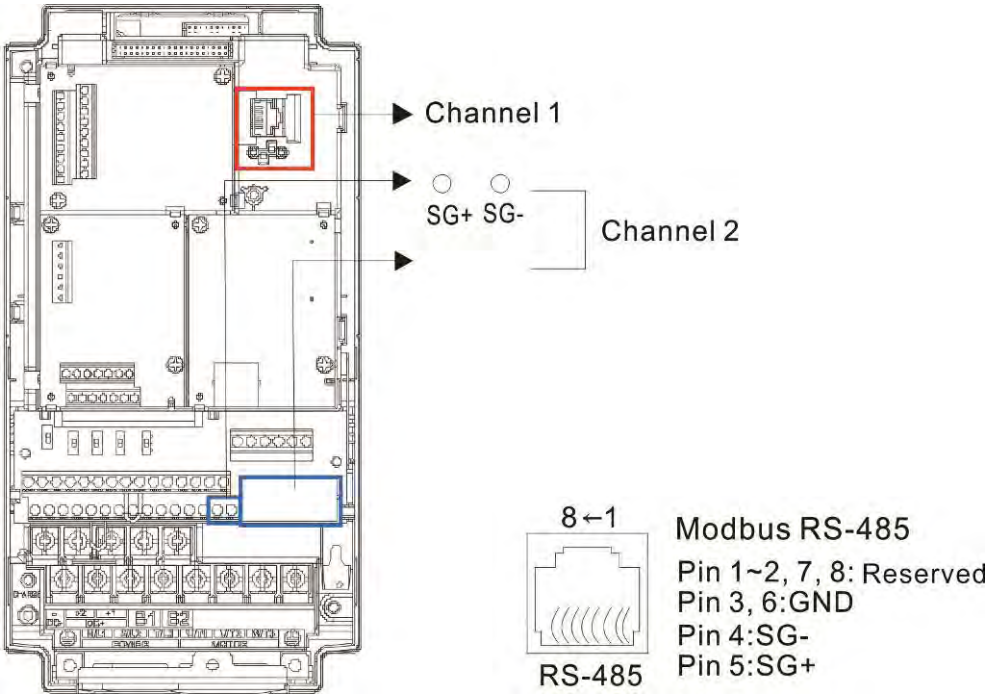

3. The client can simultaneously access data from the converter and internal PLC, which is performed through identification of the node. For instance, if the converter node is 1 and the internal PLC node is 2, then the client command will be
   01 (node) 03 (read) 0400 (address) 0001 (1 data item), indicating that it must read the data in converter Pr. 04-00
   02 (node) 03 (read) 0400 (address) 0001 (1 data item), indicating that it must read the data in internal PLC X0
4. The PLC program will be disabled when uploading/ downloading programs.
5. Please note when using WPR commands to write in parameters, values may be modified up to a maximum of 10^9 times, otherwise a memory write error will occur. The calculation of modifications is based on whether the entered value has been changed. If the entered value is left unchanged, the modifications will not increase afterwards. But if the entered value is different from before, the number of modifications will increase by one.
6. When Pr. 00-04 is set as 28, the displayed value will be the value of PLC register D1043 (see figure below):

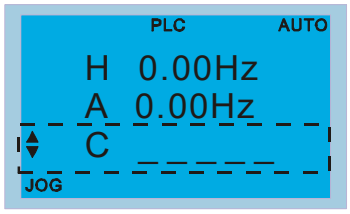

Digital Keypad KPC-CC01
Can display 0–65535

7. In the PLC Run and PLC Stop mode, the content 9 and 10 of Pr. 00-02 cannot be set and cannot be reset to the default value.
8. The PLC can be reset to the default value when Pr. 00-02 is set as 6.
9. The corresponding MI function will be disabled when the PLC writes to input contact X.
10. When the PLC controls converter operation, control commands will be entirely controlled by the PLC and will not be affected by the setting of Pr. 00-21.
11. When the PLC controls converter frequency commands (FREQ commands), frequency commands will be entirely controlled by the PLC, and will not be affected by the setting of Pr. 00-20 or the Hand ON/OFF configuration.
12. When the PLC controls converter frequency (TORQ commands), torque commands will be entirely controlled by the PLC, and will not be affected by the setting of Pr. 11-33 or the Hand ON/OFF configuration.
13. When the PLC controls converter frequency (POS commands), position commands will be entirely controlled by the PLC, and will not be affected by the setting of Pr. 11-40 or the Hand ON/OFF configuration.
14. When the PLC controls converter operation, if the keypad Stop setting is valid, this will trigger an FStP error and cause stoppage.

16-3 Turn on

16-3-1 Connect to PC

Start operation of PLC functions in accordance with the following four steps

1. After pressing the Menu key and selecting 4: PLC on the KPC-CC01 digital keypad, press the Enter key (see figure below).

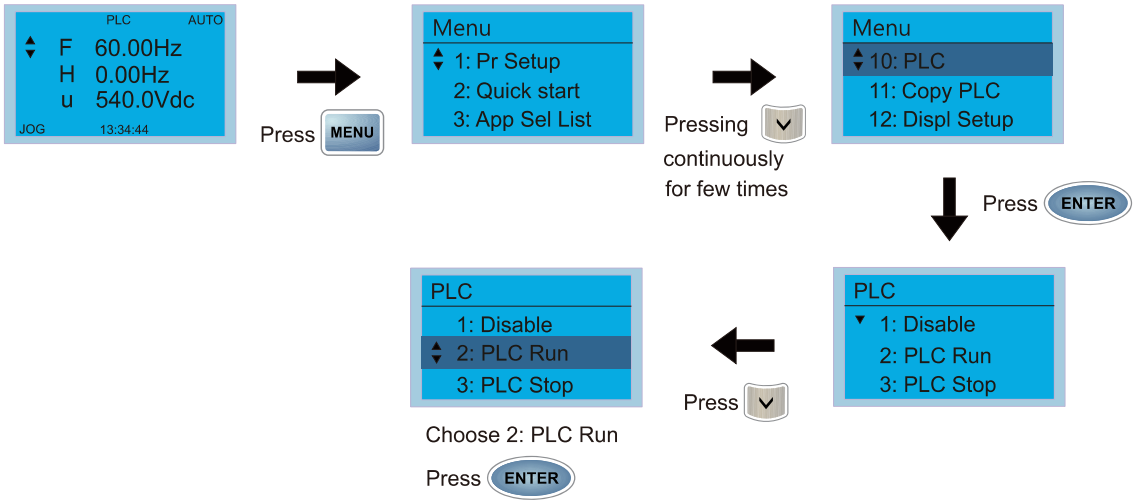

2. Wiring: Connect the drive's RJ45 communications interface to a PC via the RS-485.

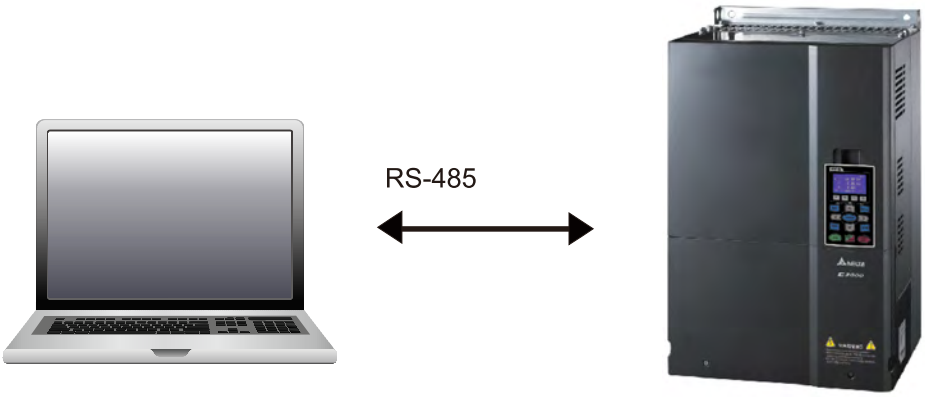

C2000 Plus

3. PLC function usage

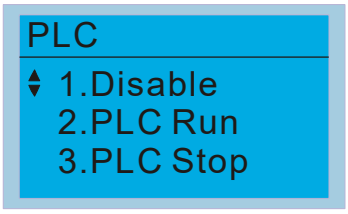

- PLC functions are as shown in the figure on the left; select item 2 and implement PLC functions.

1: No function (Disable)

2: Enable PLC (PLC Run)

3: Stop PLC functions (PLC Stop)

- When the external multifunctional input terminals (MI1–MI8) are in PLC Mode select bit0 (51) or PLC Mode select bit1 (52), and the terminal contact is closed or opened, it will compulsorily switch to the PLC mode, and keypad switching will be ineffective. Corresponding actions are as follows:

PLC mode Using KPC-CC01	PLC Mode select bit1(52)	PLC Mode select bit0 (51)
Disable	OFF	OFF
PLC Run	OFF	ON
PLC Stop	ON	OFF
Maintain previous state	ON	ON

NOTE

- When input/ output terminals (FWD REV MI1–MI8, MI10–15, Relay1, Relay2, RY10–RY15, MO1–MO2, and MO10–MO11) are included in the PLC program, these input/ output terminals will only be used by the PLC. As an example, when the PLC program controls Y0 during PLC operation (PLC1 or PLC2), the corresponding output terminal relay (RA/RB/RC) will operate in accordance with the program. At this time, the multifunctional input/ output terminal setting will be ineffective. Because these terminal functions are already being used by the PLC, the DI/ DO/ AO in use by the PLC can be determined by looking at Pr. 02-52, Pr. 02-53, and Pr. 03-30.
- When the PLC's procedures use special register D1040, the corresponding AO contact AFM1 will be occupied, and AFM2 corresponding to special register D1045 will have the same situation.
- Pr. 03-30 monitors the state of action of the PLC function analog output terminal; bit0 corresponds to the AFM1 action state, and bit1 corresponds to the AFM2 action state.

16-3-2 I/O device explanation

Input devices:

Serial No.	X0	X1	X2	X3	X4	X5	X6	X7	X10	X11	X12	X13	X14	X15	X16	X17
1	FWD	REV	MI1	MI2	MI3	MI4	MI5	MI6	MI7	MI8						
2											MI10	MI11	MI12	MI13	MI14	MI15
3											MI10	MI11	MI12	MI13		

1: Control I/O |

2: Expansion card: EMC-D611A (D1022=4)

3: Expansion card: EMC-D42A (D1022=5)

Output devices:

Serial No.	Y0	Y1	Y2	Y3	Y4	Y5	Y6	Y7	Y10	Y11	Y12	Y13	Y14	Y15	Y16	Y17
1	RY1	RY2		MO1	MO2											
2						MO10	MO11									
3						RY10	RY11	RY12	RY13	RY14	RY15					

1: Control I/O |

2: Expansion card: EMC-D42A (D1022=5)

3: Expansion card: EMC-R6AA (D1022=6)

RY1 / RY2 / RY3

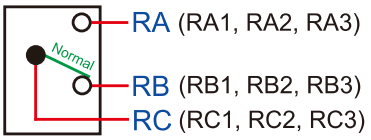

RY10 / RY11 / RY12 / RY13 / RY14 / RY15

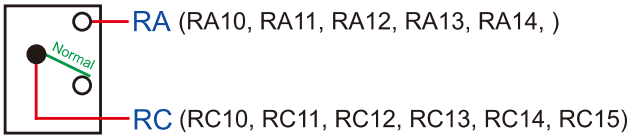

16-3-3 Installation WPLSoft

Download and install WPLSoft editing software in Delta's website:

After completing installation, the WPLSoft program will be installed in the designated subfolder "C:\Program Files\Delta Industrial Automation\WPLSoft x.xx".

16-3-4 Program writing

Step 1: Click on the WPLSoft icon to start the editing software. (See figure 16-1)

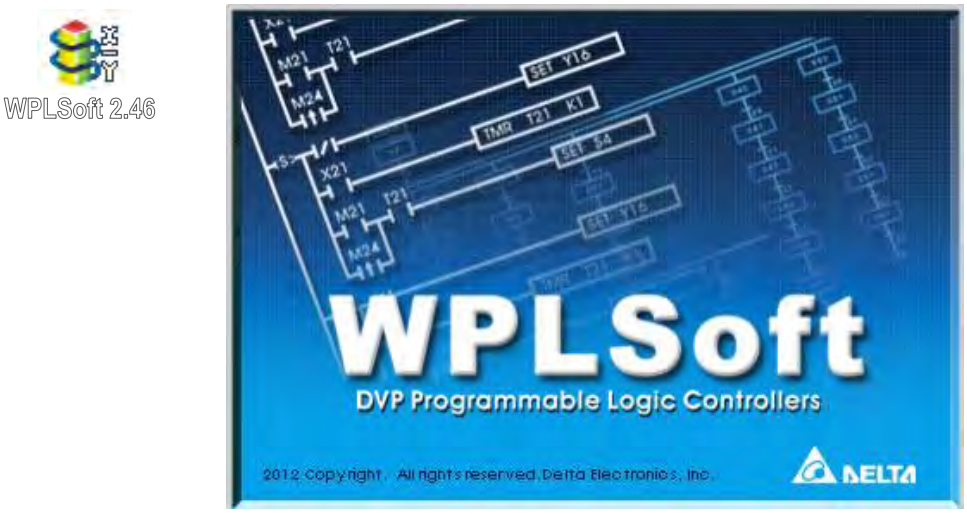

Figure 16-1 (Left: WPLSoft icon; Right: Start WPLSoft)

Step 2: The WPLSoft editing window appears (see figure 16-2 below). When running WPLSoft for the first time, before "New file" has been used, only the "File (F)," "Communications (C)," View (V)," "Options (O)," and "Help (H)" columns will appear on the function toolbar.

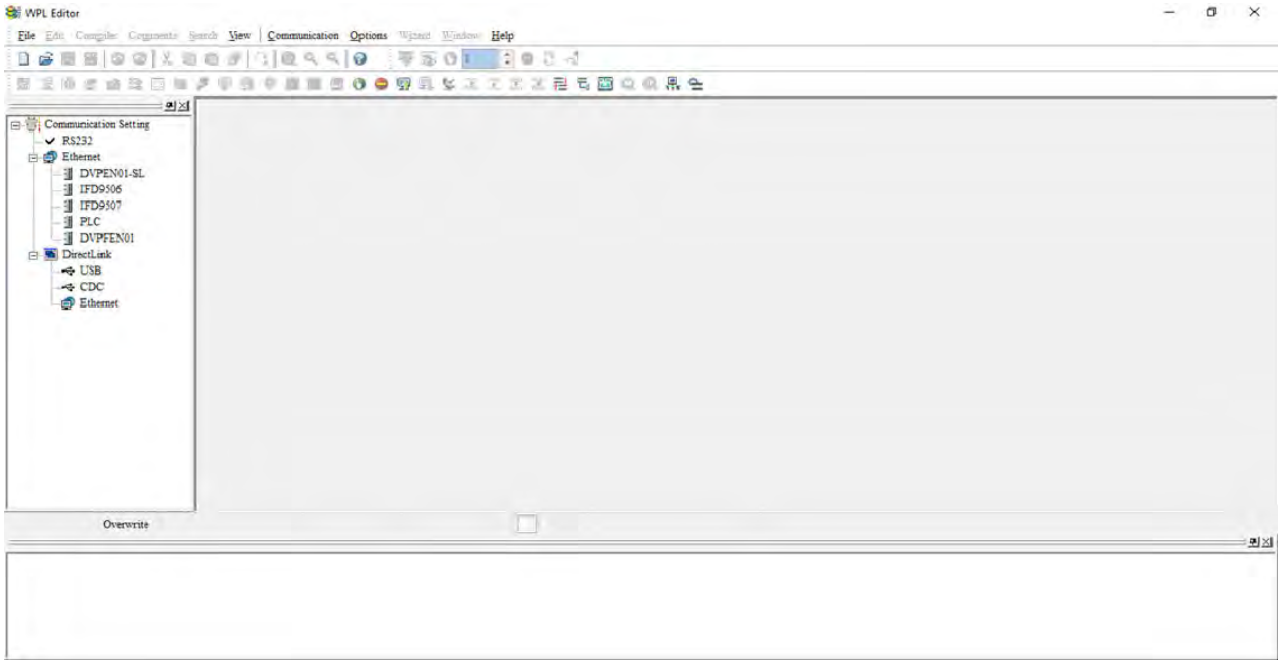

Figure 16-2

NOTE After running WPLSoft for the second time, the last file edited will open and be displayed in the editing window. The following figure 16-3 provides an explanation of the WPLSoft editing software window:

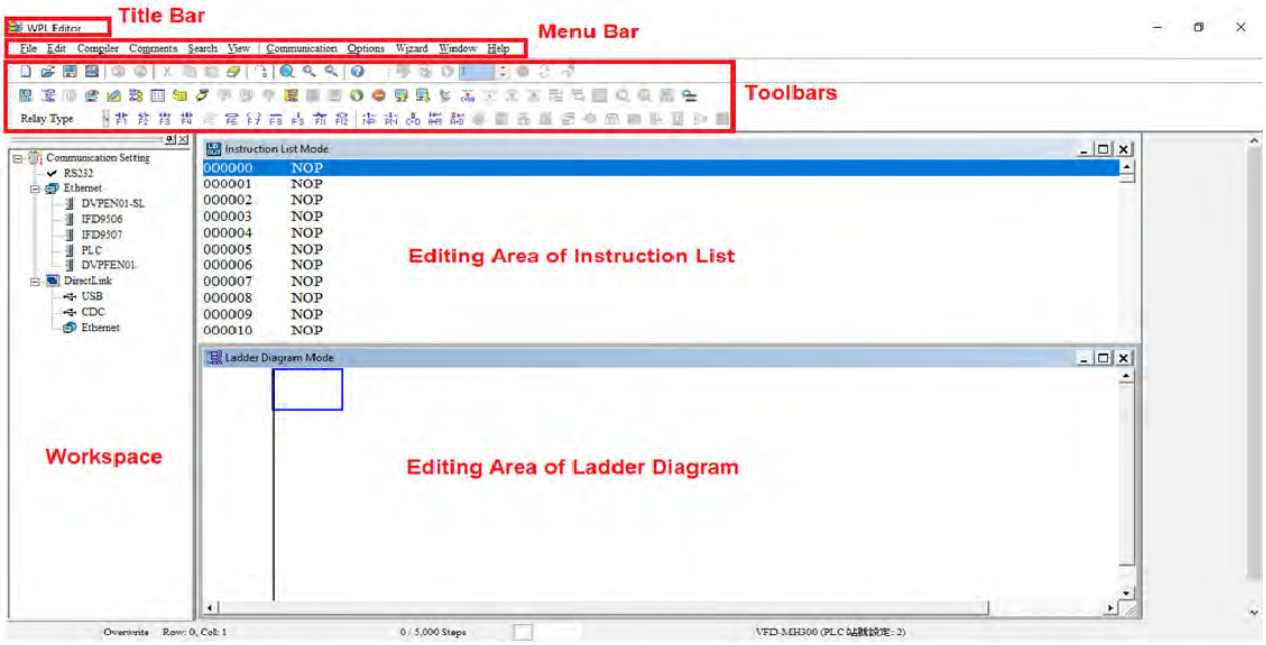

Figure 16-3

Step 3: Click on the icon on the toolbar: opens new file (Ctrl+N), see figure 16-4 below

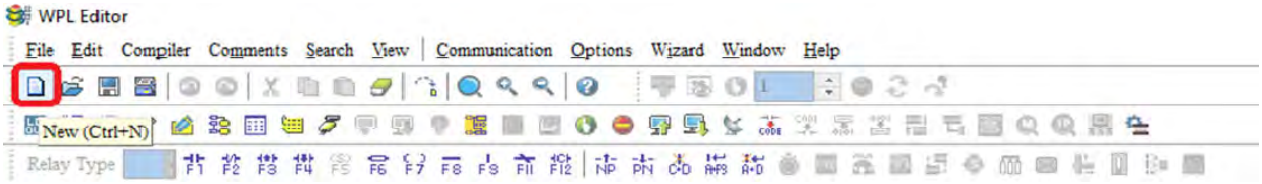

Figure 16-4

NOTE You can also find “New file (N) (Ctrl+N)” in the "File (F)", as shown in figure 16-5 below.

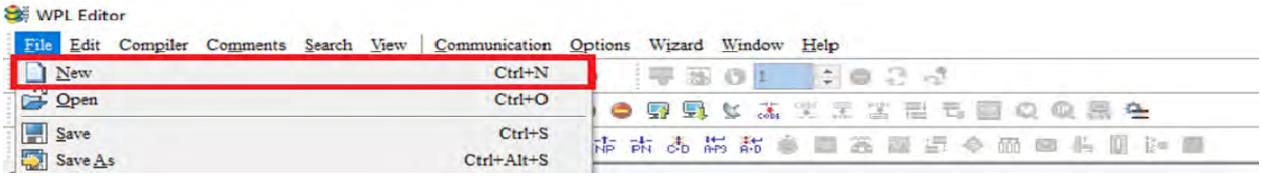

Figure 16-5

Step 4: The "Device settings" window will appear after clicking, see figure 16-6 below. You can now enter the project title and filename, and select the device and communication settings to be used.

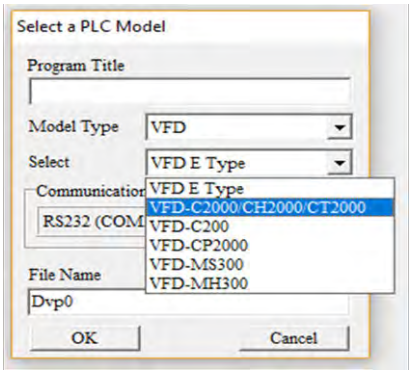

Figure 16-6

Communications settings: Perform settings in accordance with the desired communications method. See figure 16-7 below.

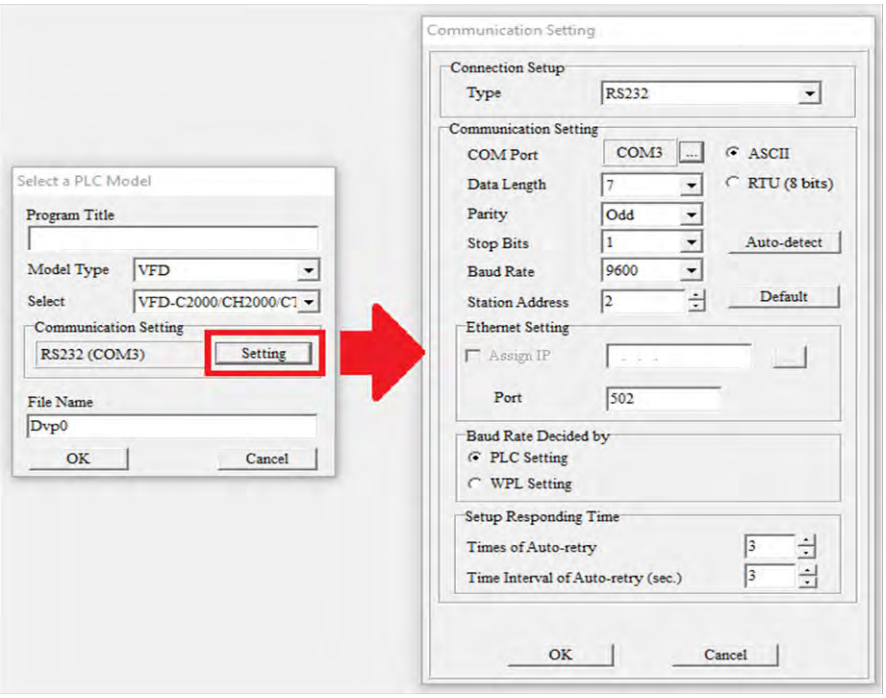

Figure 16-7

Step 5: Press Confirm after completing settings and begin program editing. There are two program editing methods; you can choose whether to perform editing in the command mode or the ladder diagram mode (see figure 16-8 below).

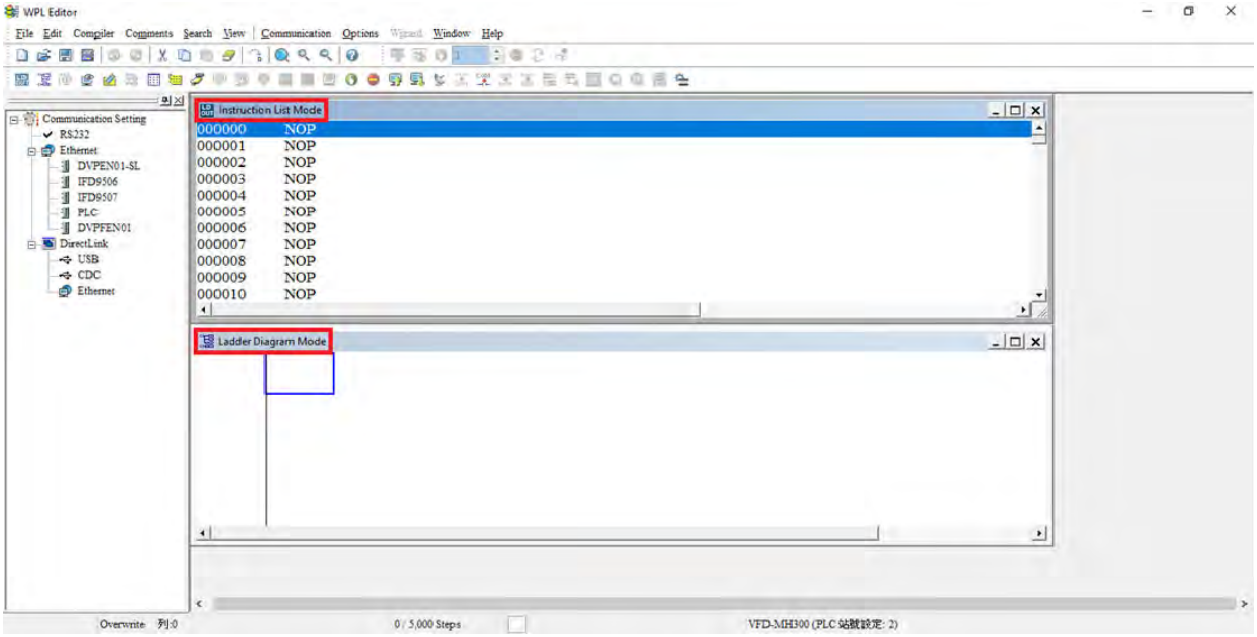

Figure 16-8

NOTE In ladder diagram mode, you can perform program editing using the buttons on the function icon row (see figure 16-9 below).

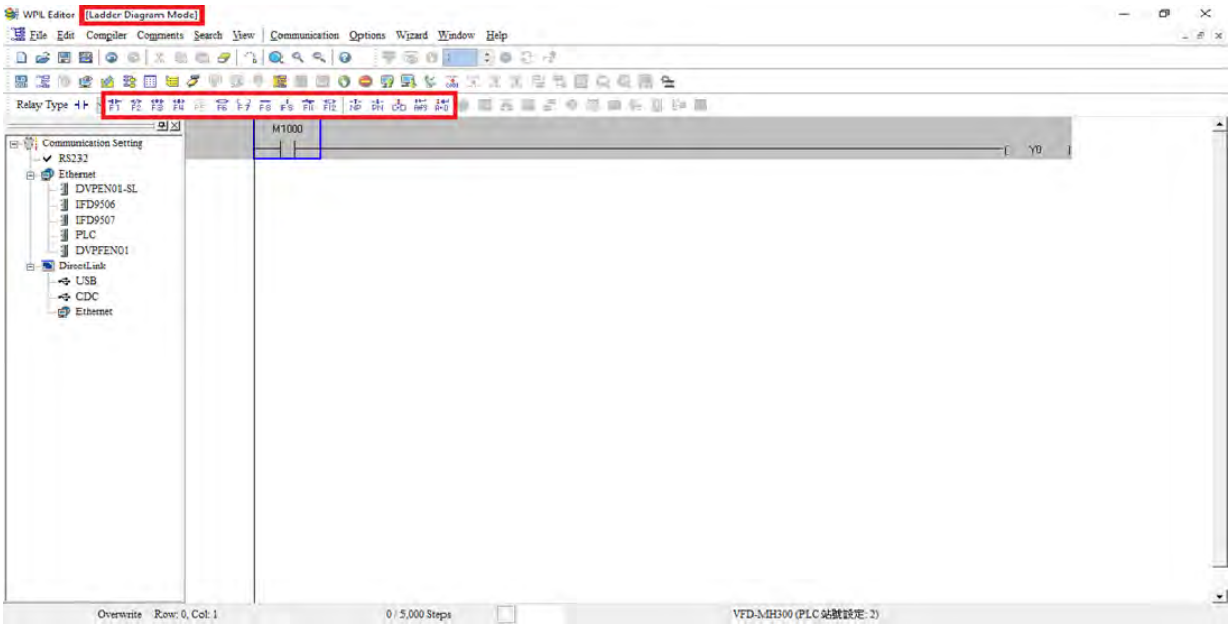

Figure 16-9

Basic Operation-Example

Input the ladder diagram as the figure below. The following steps can be operated through the mouse or function key (F1–F12) on the keyboard.

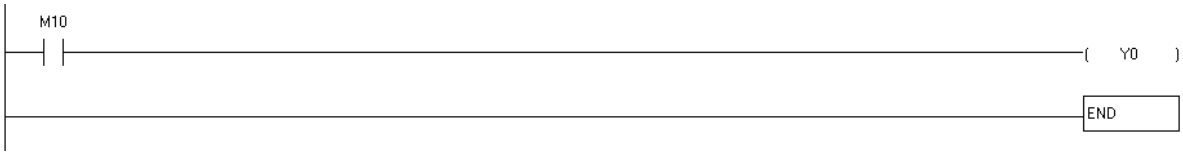

Figure 16-10

Step 1: The following screen will appear after a new file is established:

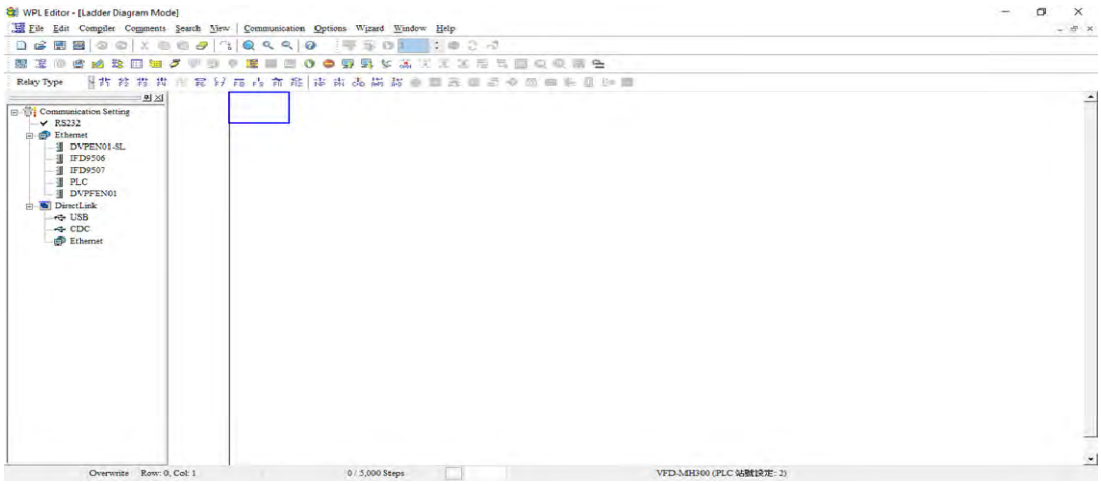

Figure 16-11

Step 2: Click on the always-open switch icon or press the function key F1. After the name of the input device and the comment dialog box have appeared, the device name (such as "M"), device number (such as "10"), and input comments (such as "auxiliary contact") can be selected; press the OK button when finished (see figure 16-12 and 16-13 below).

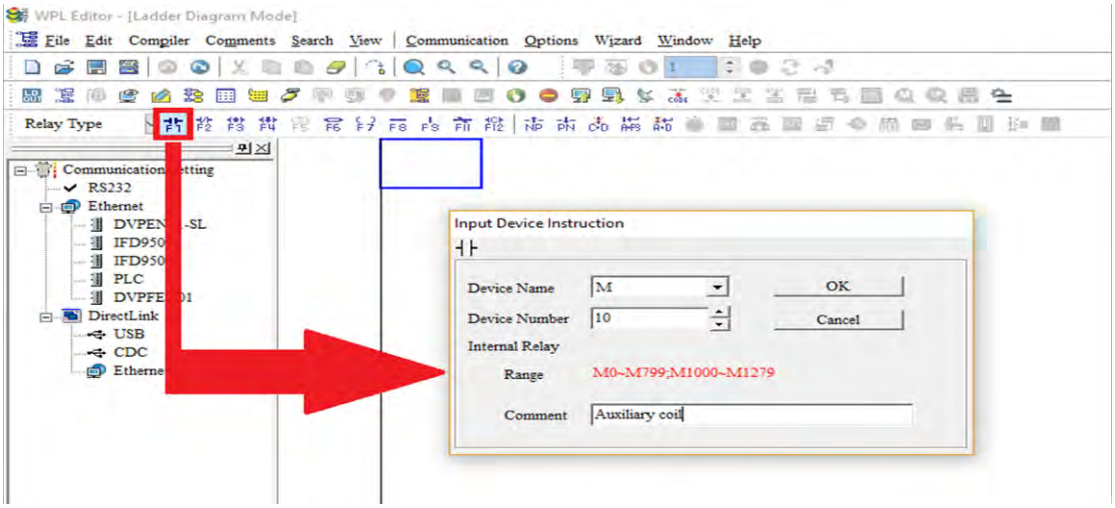

Figure 16-12

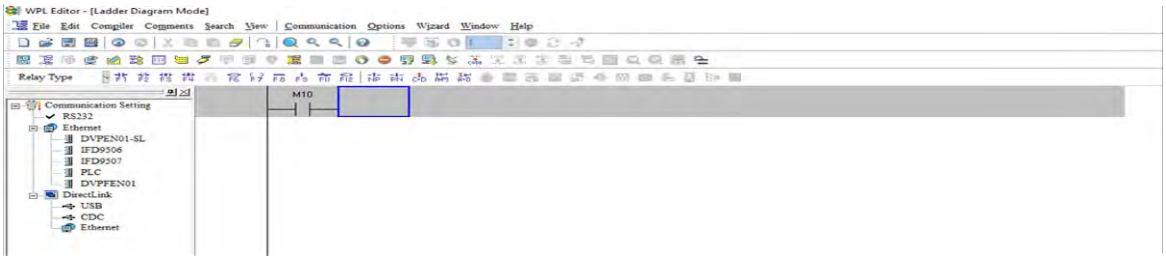

Figure 16-13

Step 3: Click on the output coil icon or press function key F7. After the name of the input device and the comment dialog box have appeared, the device name (such as "Y"), device number (such as "0"), and input comments (such as "output coil") can be selected; press the OK button when finished (see figure 16-14 and 16-15 below).

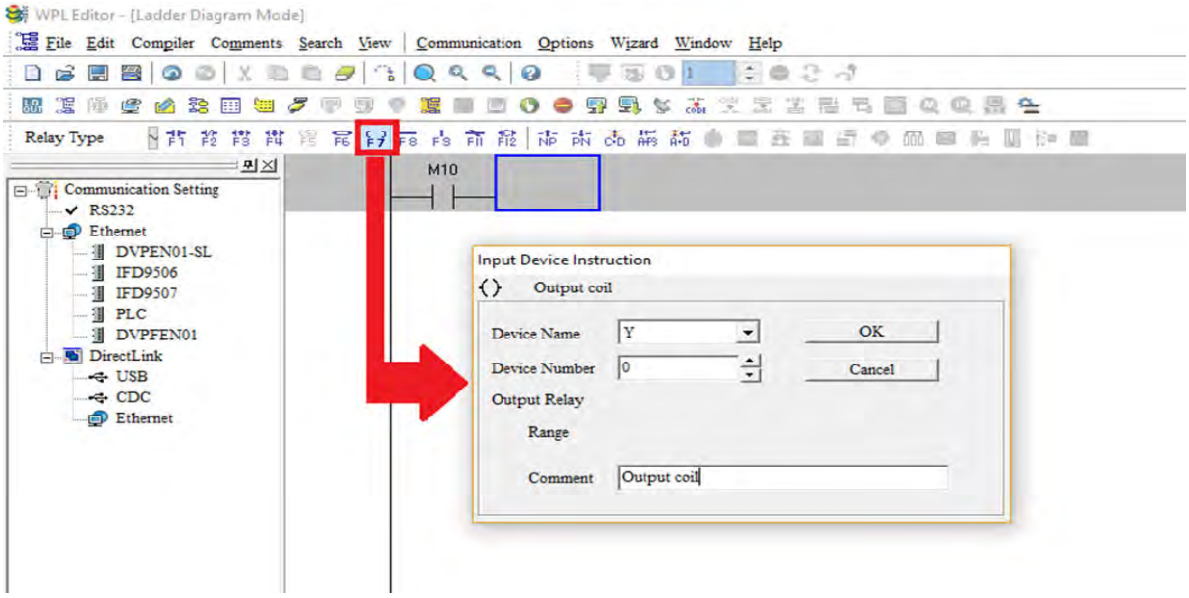

Figure 16-14

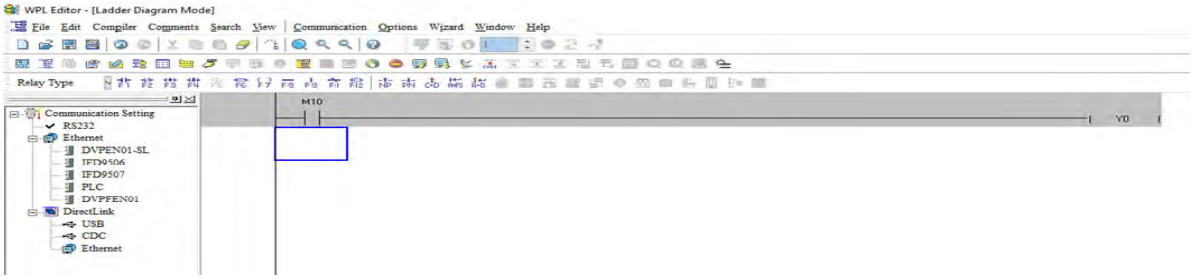

Figure 16-15

Step 4: Press “ENTER” button, when the “Input Instructions” window appears, key in “END” in the field and press the OK button (see figure 16-16 and 16-17 below).

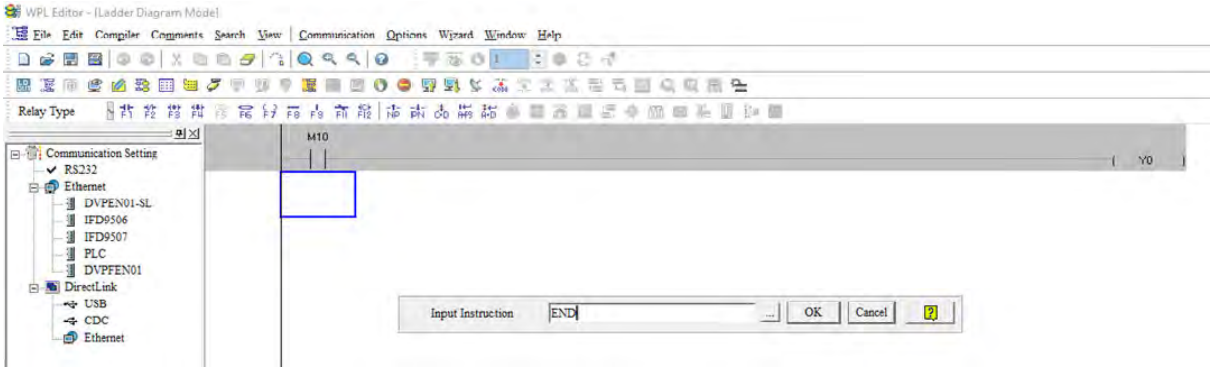

Figure 16-16

Figure 16-17

Step 5: Click on the “Ladder diagram => Code” icon, which will compile the edited ladder diagram as a command program. After compiling, the number of steps will appear on the left side of the busbar (see figure 16-18 below).

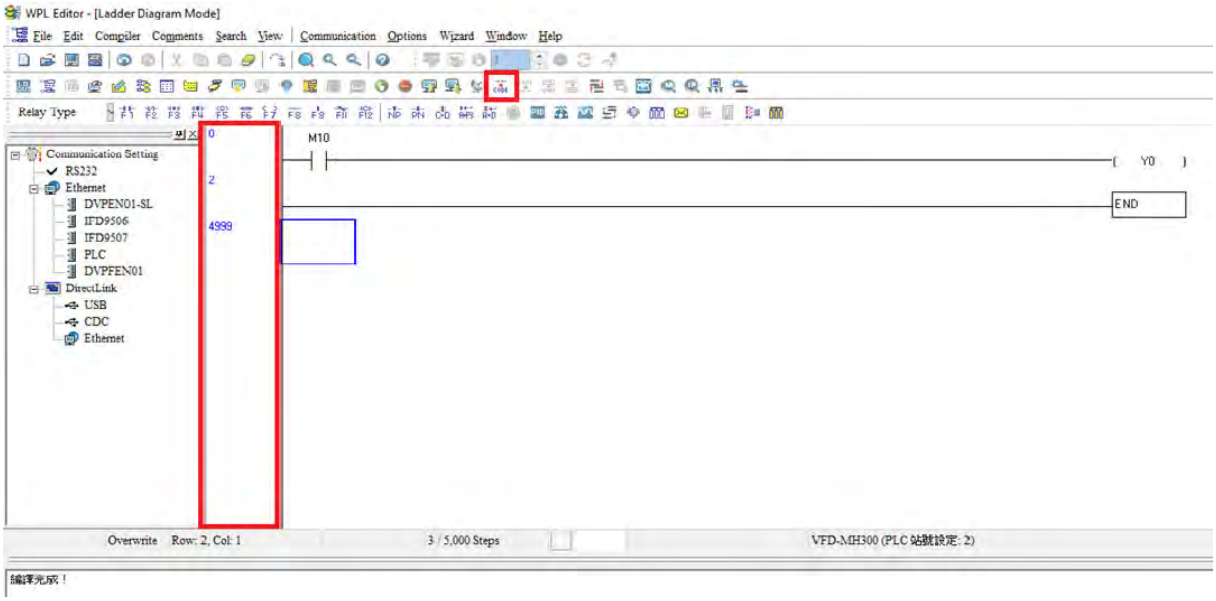

Figure 16-18

16-3-5 Program download

After inputting a program using WPLSoft, select compile . After completing compilation, select the to download a program. WPLSoft will perform program download with the online PLC in the communications format specified in communications settings.

16-3-6 Program monitoring

While confirming that the PLC is in the Run mode, after downloading a program, click on in the communications menu and select start ladder diagram control (see figure below)

16-4 Basic principles of PLC ladder diagrams

16-4-1 Schematic diagram of PLC ladder diagram program scanning

Output results are calculated on the basis of the ladder diagram configuration (internal devices will have real-time output before results are sent to an external output point)

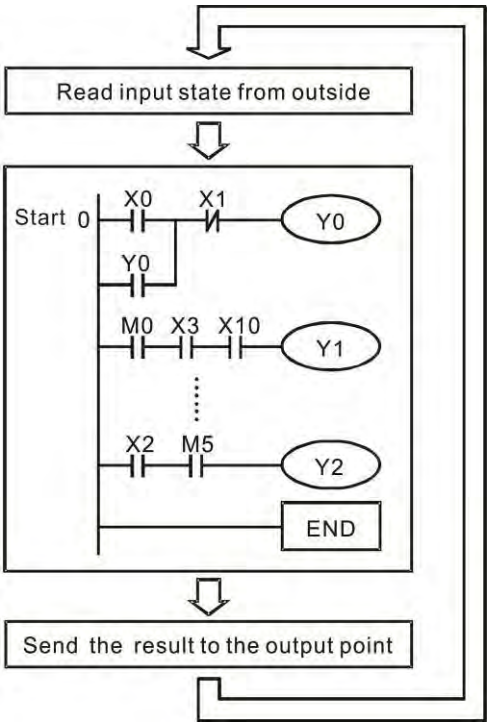

Repeated implementation

16-4-2 Introduction to ladder diagrams

Ladder diagrams comprise a graphic language widely applied in automatic control, and employs common electrical control circuit symbols. After a ladder diagram editor has been used to create a ladder pattern, PLC program designed is completed. The use of a graphic format to control processes is very intuitive, and is readily accepted by personnel who are familiar with electrical control circuit technology. Many of the basic symbols and actions in a ladder diagram comprise commonly seen electrical devices in conventional automatic control power distribution panels, such as buttons, switches, relays, timers, and counters.

Internal PLC devices: The types and quantities of internal PLC devices vary in different brands of products. Although these internal devices use the same names as conventional electrical control circuit elements such as relays, coils, and contacts, a PLC does not actually contain these physical devices, and they instead correspond to basic elements in the PLC's internal memory (bits). For instance, if a bit is 1, this may indicate that a coil is electrified, and if that bit is 0, it will indicate that the coil is not electrified. An N.O. contact (Normal Open, or contact a) can be used to directly read the value of the corresponding bit, and an N.C. contact (Normal Close, or contact b) can be used to obtain the inverse of the bit's value. Multiple relays occupy multiple bits, and 8 bits comprise one byte; two bytes comprise one word, and two words comprise a double word. When multiple relays are processing at the same time (such as addition/ subtraction or displacement, etc.), a byte, word, or double word can be used. Furthermore, a PLC contains two types of internal devices: a timer and a counter. It not only has a coil, but can count time and numerical values. Because of this, when it is necessary to process some numerical values, these values are usually in the form of bytes, words, or double words.

The various internal devices in a PLC all account for a certain quantity of storage units in the PLC's storage area. When these devices are used, the content of the corresponding storage area is read in the form of bits, bytes, or words.

Introduction to the basic internal devices in a PLC

Device type	Description of Function
Input Relay	An input relay constitutes the basic unit of storage in a PLC's internal memory corresponding to an external input point (which serves as a terminal connecting with an external input switch and receiving external input signals). It is driven by external input signals, to which it assigns values of 0 or 1. A program design method cannot change the input relay status, and therefore cannot rewrite the corresponding basic units of an input relay, and WPLSoft cannot be used to perform compulsory On/Off actions. A relay's contacts (contacts a and b) can be used an unlimited number of times. An input relay with no input signal must be left idle and cannot be used for some other purpose. ☑ Device indicated as: X0, X1, X7, X10, X11, etc. This device is expressed with the symbol "X" , and a device's order is indicated with an octal number. Please refer to Chapter 16-3-2 I/O device explanation for input point numbers.
Output Relay	An output relay constitutes the basic unit of storage in a PLC's internal memory corresponding to an external output point (which connects with an external load). It may be driven by an input relay contact, a contact on another internal device, or its own contacts. It uses one NO contact to connect with external loads or other contacts, and, like input contacts, can use the contact an unlimited number of times. An output relay with no input signal will be idle, but may be used an internal relay if needed. ☑ Device indicated as: Y0, Y1,…Y7, Y10, Y11,…etc. This device is expressed with the symbol "Y" , and a device's order is indicated with an octal number. Please refer to Chapter 16-3-2 I/O device explanation for output point numbers.
Internal Relay	Internal relays have no direct connection with the outside. These relays are auxiliary relays inside a PLC. Their function is the same as that of an auxiliary (central) relay in an electrical control circuit: Each auxiliary relay corresponding to a basic unit of internal storage; they can be driven by input relay contacts, output relay contacts, and the contacts of other internal devices. An internal auxiliary relay's contact can also be used an unlimited number of times. Internal relays have no outputs to outside, and must output via an output point. ☑ Device indicated as: M0, M1 to M799, etc. This device is expressed as the symbol "M" , and its order is expressed as a decimal number.
Counter	A counter is used to perform counting operations. A count setting value (such as the number of pulses to be counted) must be assigned when a counter is used. A counter contains a coil, contact, and a counting storage device. When the coil goes from Off to On, this indicates that the counter has an input pulse, and one is added to its count. There are 16 bits that can be employed by the user. ☑ Device indicated as: C0, C1 to C79, etc. This device is expressed as the symbol "C" , and its order is expressed as a decimal number.
Timer	A timer is used to complete control of timing. The timer contains a coil, contact, and a time value register. When the coil is electrified, if the preset time is reached, the contact will be actuated (contact a will close, contact b will open), and the timer's fixed value will be given by the set value. Timer has a regulated clock cycle (timing units: 100 ms). As soon as power to the coil is cut off, the contact will no longer be actuated (contact a will open, contact b will close), and the original timing value will return to zero. ☑ Device indicated as: T0, T1 to T159, etc. The device is expressed as the symbol "T" , and its order is expressed as a decimal number.

Device type	Description of Function
Data register	When a PLC is used to perform various types of sequence control and set time value and count value control, it most commonly perform data processing and numerical operations, and data registers are used exclusively for storage of data and various parameters. Each data register contains 16 bits of binary data, which means that it can store one word. Two data registers with adjacent numbers can be used to process double words. ☑ Device indicated as: D0, D1 to D399, etc. The device is expressed as the symbol "D" , and its order is expressed as a decimal number.

Ladder diagram images and their explanation

Ladder diagram structures	Explanation of commands	Command	Using Device
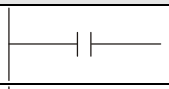	NO switch, contact a	LD	X、Y、M、T、C
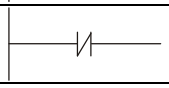	NC switch, contact b	LDI	X、Y、M、T、C
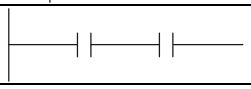	Series NO	AND	X、Y、M、T、C
	Series NC	ANI	X、Y、M、T、C
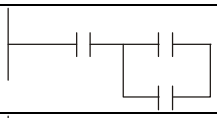	Parallel NO	OR	X、Y、M、T、C
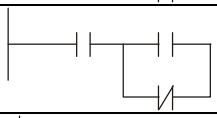	Parallel NC	ORI	X、Y、M、T、C
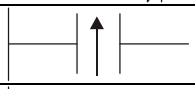	Positive edge-triggered switch	LDP	X、Y、M、T、C
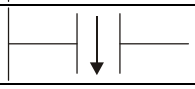	Negative edge-triggered switch	LDF	X、Y、M、T、C
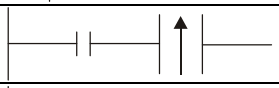	Positive edge-triggered series	ANDP	X、Y、M、T、C
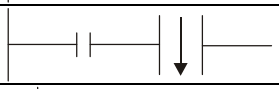	Negative edge-triggered series	ANDF	X、Y、M、T、C
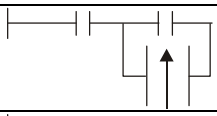	Positive edge-triggered parallel	ORP	X、Y、M、T、C
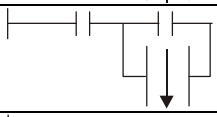	Negative edge-triggered parallel	ORF	X、Y、M、T、C
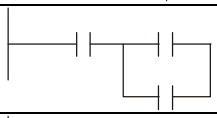	Block series	ANB	N/A
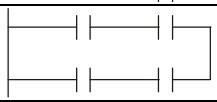	Block parallel	ORB	N/A
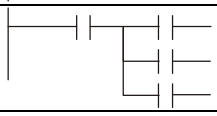	Multiple outputs	MPS MRD MPP	N/A
	Coil driven output commands	OUT	Y、M

Ladder diagram structures	Explanation of commands	Command	Using Device
	Some basic commands, applications commands	Some basic commands Applications commands	
	Inverted logic	INV	N/A

16-4-3 Overview of PLC ladder diagram editing

The program editing method begins from the left busbar and proceeds to the right busbar (the right busbar is omitted when editing using WPLSoft). Continue to the next row after completing each row; there is a maximum of 11 contacts on each row. If this is not sufficient, a continuous line will be generated to indicate the continued connection and more devices can be added. A continuous series of numbers will be generated automatically and identical input points can be used repeatedly. See figure below:

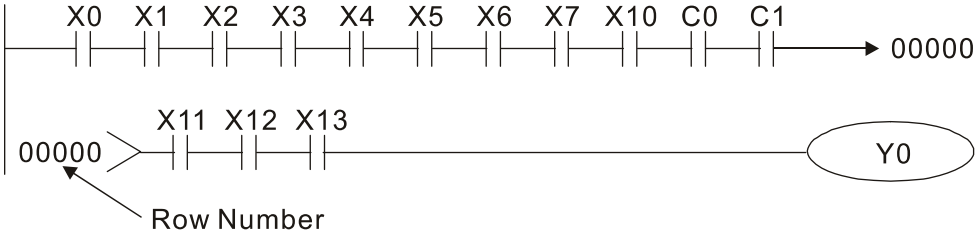

The ladder diagram programming method involves scanning from the upper left corner to the lower right corner. The coils and applications command-computing box are handled in the output, and the ladder diagram is placed on the farthest right. Taking the figure below as an example, we can gradually analyze the procedural sequence of the ladder diagram. The number in the upper right corner gives the sequential order.

Explanation of command sequence

1	LD	X0	
2	OR	M0	
3	AND	X1	
4	LD	X3	
	AND	M1	
	ORB		
5	LD	Y1	
	AND	X4	
6	LD	T0	
	AND	M3	
	ORB		
7	ANB		
8	OUT	Y1	
	TMR	T0	K10

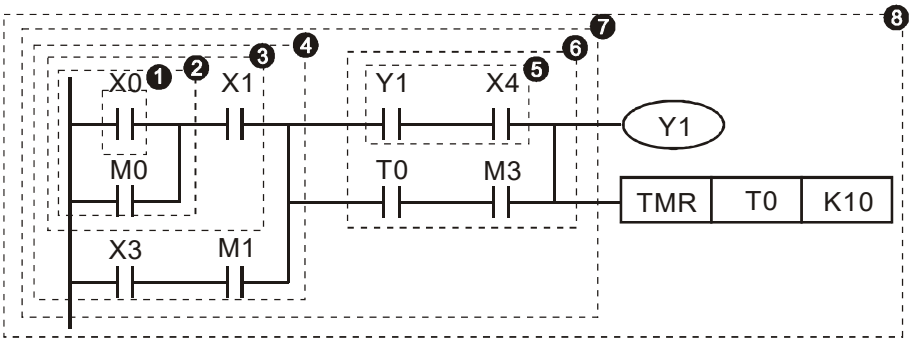

Explanation of basic structure of ladder diagrams

LD (LDI) command: An LD or LDI command is given at the start of a block.

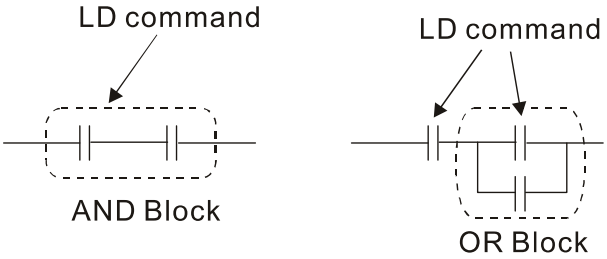

LDP and LDF have this command structure, but there are differences in their action state. LDP, LDF only act at the rising or falling edge of a conducting contact. (see figure below):

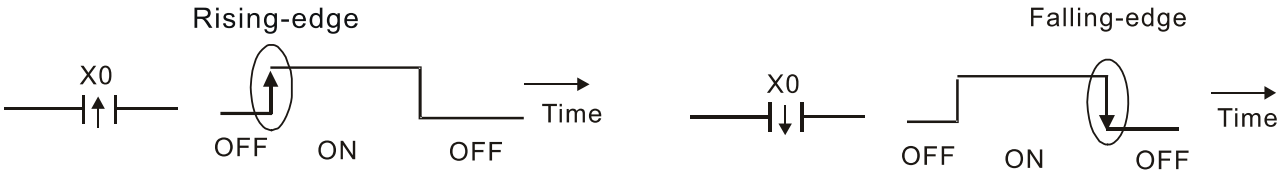

AND (ANI) command: A series configuration in which a single device is connected with one device or a block.

ANDP, ANDF also have structures like this, but their action occurs at the rising and falling edge.

OR (ORI) command: A single device is connected with one device or a block.

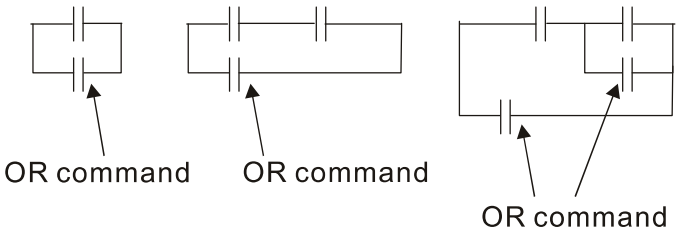

ORP, ORF also have identical structures, but their action occurs at the rising and falling edge.

ANB command: A configuration in which one block is in series with one device or block.

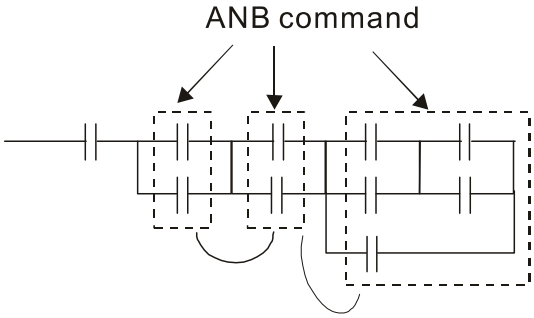

ORB command: A configuration in which one block is in parallel with one device or block.

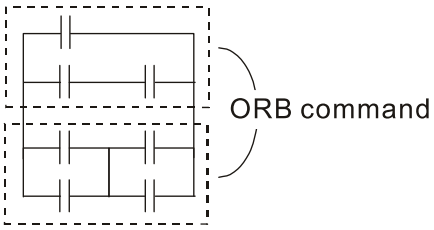

In the case of ANB and ORB operations, if a number of blocks are connected, they should be combined to form a block or network from the top down or from left to right.

MPS, MRD, MPP commands: Branching point memory for multiple outputs, enabling multiple, different outputs. The MPS command begins at a branching point, where the so-called branching point refers to the intersection of horizontal and vertical lines. We have to rely on the contact status along a single vertical line to determine whether the next contact can give a memory command. While each contact is basically able to give memory commands, in view of convenience and the PLC's capacity restrictions, this can be omitted from some places when converting a ladder diagram. The structure of the ladder diagram can be used to judge what kinds of contact memory commands are used.

MPS can be distinguished by use of the "┬" symbol; this command can be used consecutively for up to 8 times. The MRD command is read from branching point memory; because logic states along any one vertical line must be the same, in order to continue analysis of other ladder diagrams, the original contact status must be read.

MRD can be distinguished by use of the "├" symbol. The MPP command is read from the starting state of the uppermost branching point, and it is read from the stack (pop); because it is the final command along a vertical line, it indicates that the state of the vertical line can be concluded.

MPP can be distinguished by use of the "└" symbol. Although there should basically be no errors when using the foregoing analytical approach, the compiling program may sometimes omit identical state output, as shown in the following figure:

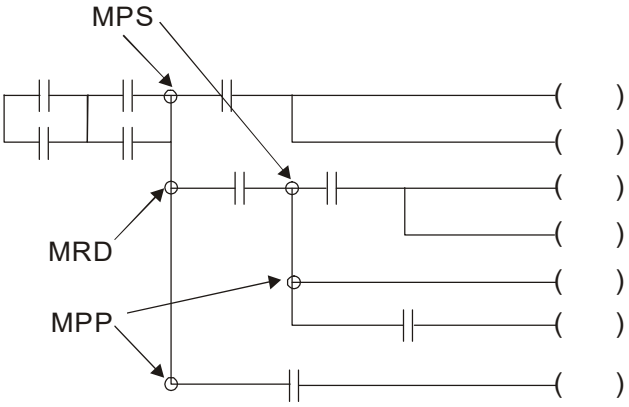

16-4-4 Commonly used basic program design examples

Start, stop, and protection

Some applications may require a brief close or brief break using the buttons to start and stop equipment. A protective circuit must therefore be designed to maintain continued operation in these situations; this protective circuit may employ one of the following methods:

Example 1: Priority stop protective circuit

When the start NO contact X1=On, and the stop NC contact X2＝Off, Y1=On; if X2=On at this time, coil Y1 will no longer be electrified, and this is therefore referred to as priority stop.

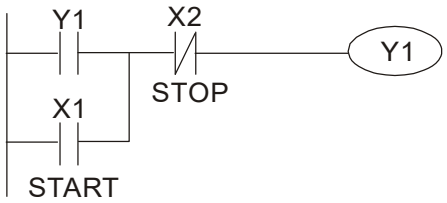

Example 2: Priority start protective circuit

When start NO contact X1=On, and the stop NC contact X2＝Off, Y1=On, and coil Y1 will be electrified and protected. At this time, if X2=On, coil Y1 will still protect the contact and continue to be electrified, and this is therefore priority start.

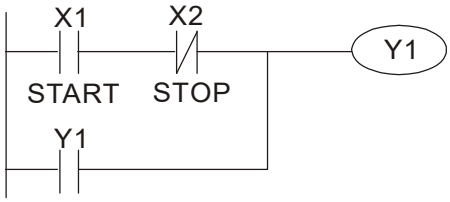

Example 3: Setting (SET) and reset (RST) command protective circuit

The following figure shows a protective circuit composed of RST and SET commands.

Priority stop occurs when the RST command is placed after the SET command. Because the PLC executes programs from the top down, at the end of the program, the state of Y1 will indicate whether coil Y1 is electrified. When X1 and X2 are both actuated, Y1 will lose power, and this is therefore priority stop.

Priority start occurs when the SET command is placed after the RST command. When X1 and X2 are both actuated, Y1 will be electrified, and this is therefore priority start.

Top priority of stop

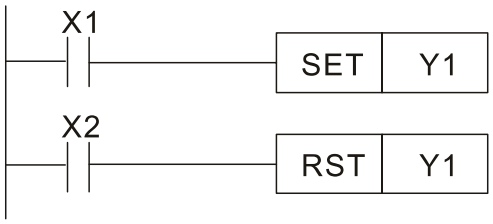

Top priority of start

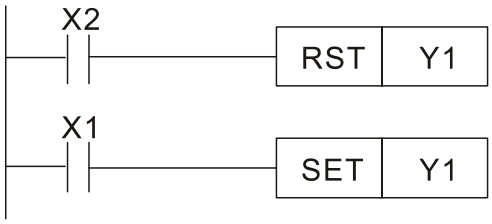

Commonly used control circuits

Example 4: Conditional control

X1, X3 are respectively start/ stop Y1, and X2 & X4 are respectively start/ stop Y2; all have protective circuits. Because Y1's NO contact is in series with Y2's circuit, it becomes an AND condition for the actuation of Y2. The action of Y1 is therefore a condition for the action of Y2, and Y1 must be actuated before Y2 can be actuated.

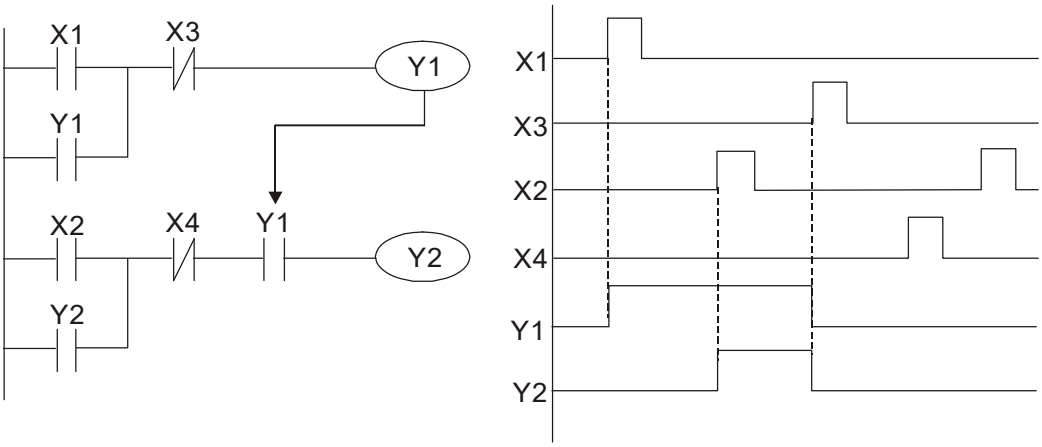

Example 5: Interlocking control

The figure below shows an interlocking control circuit. Depending on which of the start contacts X1, X2 is valid first, the corresponding output Y1 or Y2 will be actuated, and when one is actuated, the other will not be actuated. This implies that Y1 and Y2 cannot be actuated at the same time (interlocking effect). Even if both X1 and X2 are valid at the same time, because the ladder diagram program is scanned from the top down, it is impossible for Y1 and Y2 to be actuated at same time. This ladder diagram assigns priority only to Y1.

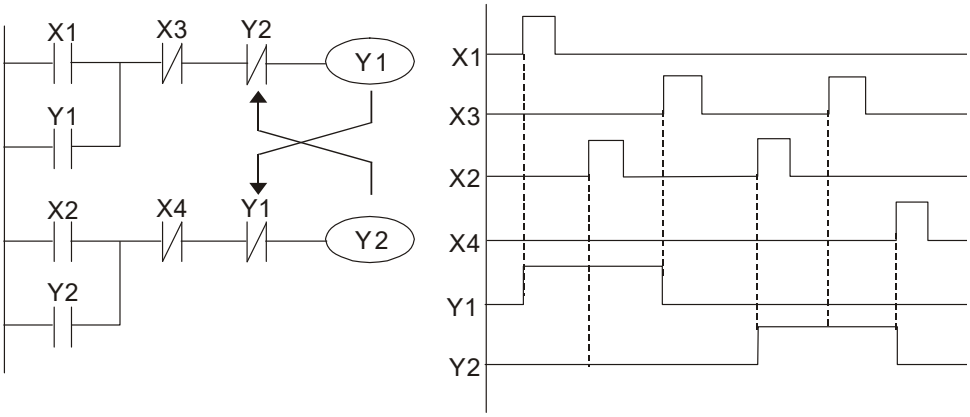

Example 6: Sequence control

If the NC contact of Y2 in the interlocking control configuration of example 5 is put in series with the Y1 circuit, so that it is an AND condition for actuation of Y1 (see figure below), not only is Y1 a condition for the actuation of Y2 in this circuit, the actuation of Y2 will also stop the actuation of Y1. This configuration confirms the actuation order of Y1 and Y2.

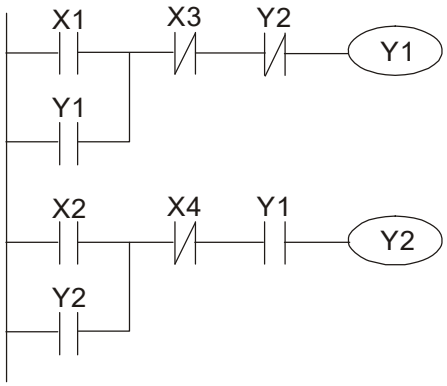

Example 7: Oscillating circuit

Oscillating circuit with a period of ΔT+ΔT

The figure below shows a very simple ladder diagram. When starting to scan the Y1 NC contact, because the Y1 coil has lost power, the Y1 NC contact will be closed. When the Y1 coil is then scanned, it will be electrified, and the output will be 1. When the Y1 NC contact is scanned in the scanning cycle, because Y1 coil is electrified, the Y1 NC contact will be opened, the Y1 coil will then lose power, and the output will be 0. Following repeated scanning, the output of Y1 coil will have an oscillating waveform with a period of ΔT (On) +ΔT (Off).

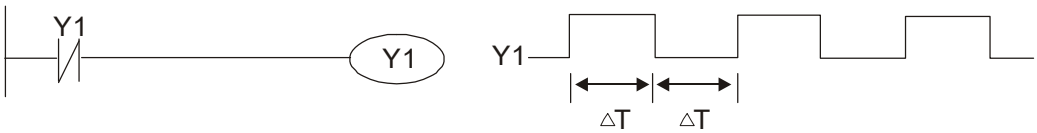

Oscillating circuit with a period of nT+ΔT

The program of the ladder diagram shown below uses timer T0 to control coil Y1's electrified time. After Y1 is electrified, it causes timer T0 to close during the next scanning cycle, which will cause the output from Y1 to have the oscillating waveform shown in the figure below. Here n is the timer's decimal setting value, and T is the clock cycle of the timer.

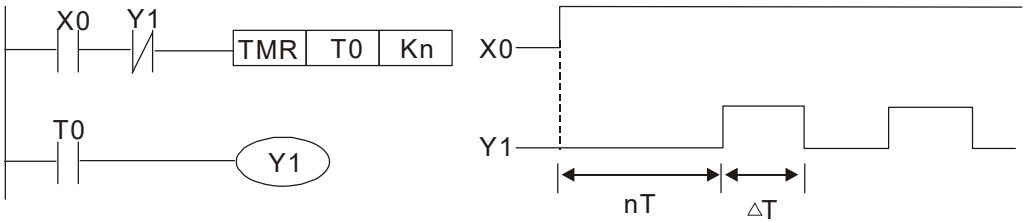

Example 8: Flashing circuit

The following figure shows an oscillating circuit of a type commonly used to cause an indicator light to flash or a buzzer to buzz. It uses two timers to control the On and Off time of Y1 coil. Here n1, n2 are the timing set values of T1 and T2, and T is the clock cycle of the timer.

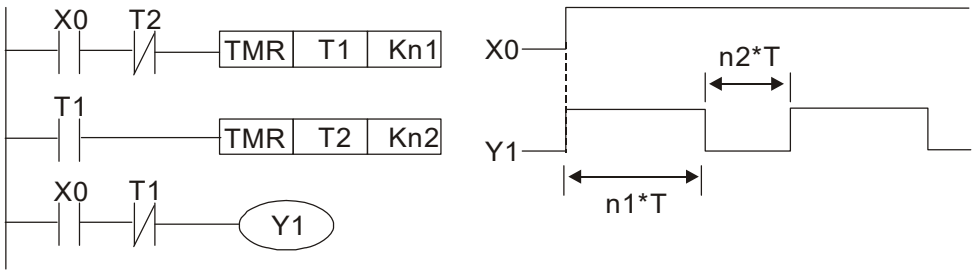

Example 9: Triggering circuit

In the figure below, a command consisting of the differential of the rising edge of X0 causes coil M0 to generate a single pulse for ΔT (length of one scanning cycle), and coil Y1 is electrified during this scanning cycle. Coil M0 loses power during the next scanning cycle, and NC contact M0 and NC contact Y1 are both closed. This causes coil Y1 to stay in an electrified state until there is another rising edge in input X0, which again causes the electrification of coil M0 and the start of another scanning cycle, while also causing coil Y1 to lose power, etc. The sequence of these actions can be seen in the figure below. This type of circuit is commonly used to enable one input to perform two actions in alternation. It can be seen from the time sequence in the figure below that when input X0 is a square wave signal with a period of T, the output of coil Y1 will be a square wave signal with a period of 2T.

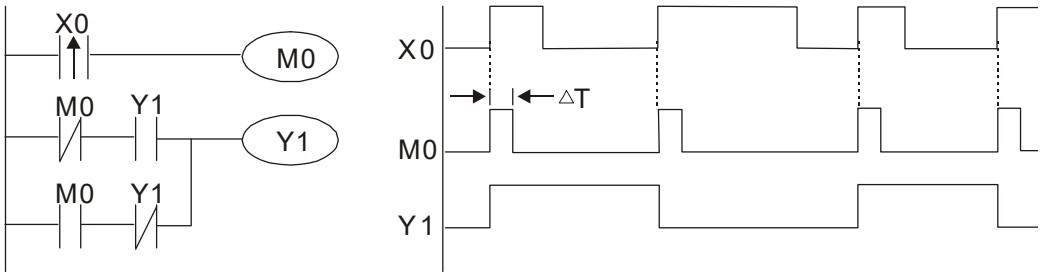

Example 10: Delay circuit

When input X0 is On, because the corresponding NC contact will be Off, the timer T10 will be in no power status, and output coil Y1 will be electrified. T10 will receive power and begin timing only after input X0 is Off, and output coil Y1 will be delayed for 100 sec. (K1000*0.1 sec. =100 sec.) before losing power; please refer to the sequence of actions in the figure below.

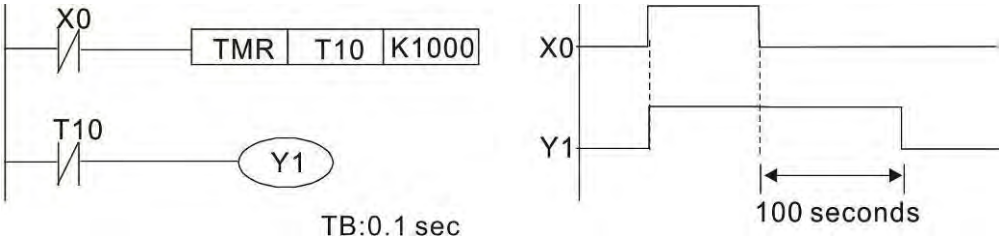

Example 11: The open/ close delay circuit is composed of two timers; output Y4 will have a delay whether input X0 is On or Off.

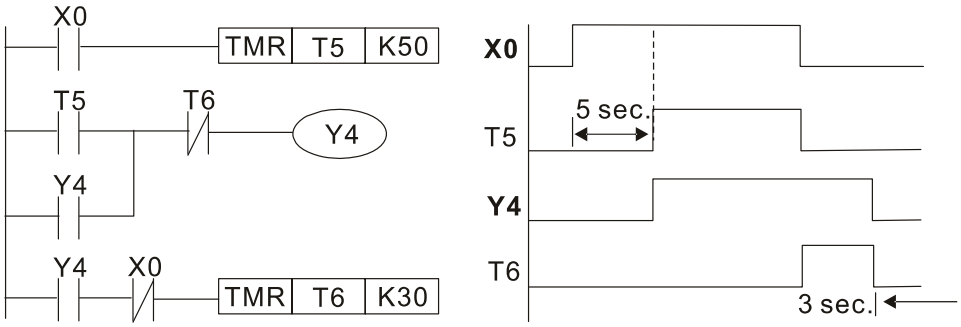

Example 12: Extended timing circuit

In the circuit in the figure on the left, the total delay time from the moment input X0 closes to the time output Y1 is electrified is (n1+n2)*T, where T is the clock cycle. Timers: T11, T12; clock cycle: T.

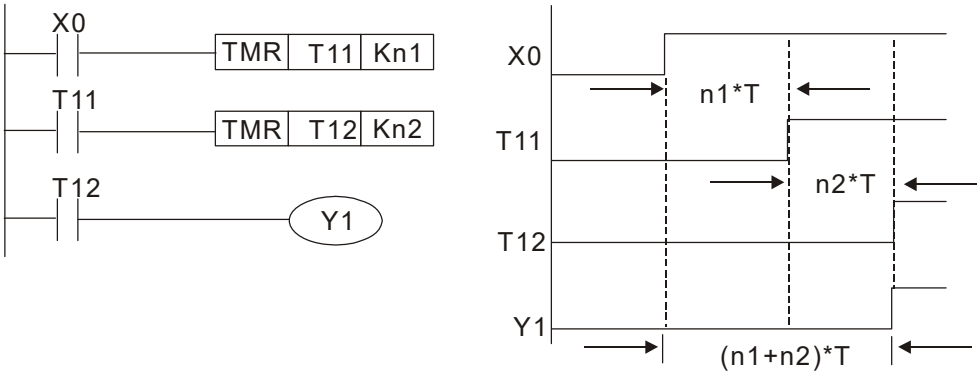

16-5 Various PLC device functions

Item	Specifications	Notes
Algorithmic control method	Program stored internally, alternating back-and-forth scanning method	
Input/ output control method	When it starts again after ending (after execution to the END command), the input/ output has an immediate refresh command	
Algorithmic processing speed	Basic commands (several μs);	Applications command (1 to several tens of μs)
Programming language	Command + ladder diagram	
Program capacity	10000 steps	
Input/ output terminal	Input (X): 10, output (Y): 4	This number of contacts constitutes C2000 Plus input/ output contacts; other devices have different correspondences

Type	Device	Item		Range		Function
Relay bit form	X	External input relay		X0–X17, 16 points, octal number	Total 32 points	Corresponds to external input point
	Y	External output relay		Y0–Y17, 16 points, octal number		Corresponds to external output point
	M	Auxiliary Relay	General Use	M0–M799, 800 points	Total 880 points	Contact can switch On/ Off within the program
			Special purpose	M1000–M1079, 80 points		
	T	Timer	100ms timer	T0–T159, 160 points	Total 160 points	Timers referred to by the TMR command; contact of the T with the same number will go On when the time is reached
	C	Counter	16-bit counter, general use	C0–C79, 80 points	Total 80 points	Counter referred to by the CNT command; contact of the C with the same number will go On when the count is reached
Register word data	T	Current timer value		T0–T159, 160 points		The contact will be On when the time is reached
	C	Current counter value		C0–C79, 16-bit counter 80 points		The counter contact will come On when the count is reached
	D	Data Register	Used to maintain power Off	D0–D399, 400 points	Total 1400 points	Used as data storage memory area
			Special purpose	D1000–D1199, 200 points D2000–D2799, 800 points		
Constant	K	Decimal	Single-byte	Setting Range: K-32,768–K32,767		
			Double-byte	Setting Range: K-2,147,483,648–K2,147,483,647		
	H	Hexadecimal	Single-byte	Setting Range:H0000–HFFFF		
			Double-byte	Setting Range: H00000000–HFFFFFFFF		
Serial communications port (program write/read)				RS-485/ keypad port		
Input/output				Built-in three analog inputs and two analog outputs		
Function expansion module			Optional Accessories	EMC-D42A; EMC-R6AA; EMCD611A		
Communication Expansion Module			Optional Accessories	EMC-COP01,(CANopen)		

16-5-1 Introduction to device functions

Input/ output contact functions

Input contact X functions: Input contact X is connected with an input device, and reads input signals entering the PLC. The number of times that contact a or b of input contact X is used in the program is not subject to restrictions. The On/ Off state of input contact X will change as the input device switches On and Off; a peripheral device (WPLSoft) cannot be used to force contact X On or Off.

Output contact Y functions

The job of output contact Y is to send an On/Off signal to drive the load connected with output contact Y. Output contacts consist of two types: relays and transistors. While number of times that contact a or b of each output contact Y is used in the program is not subject to restrictions, it is recommended that the number of output coil Y be used only once in a program, otherwise the right to determine the output state when the PLC performs program scanning will be assigned to the program's final output Y circuit.

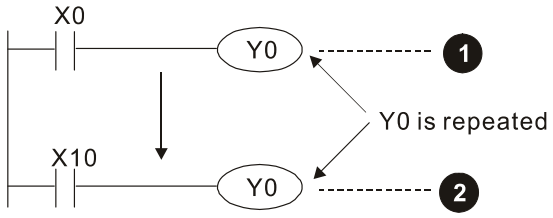

The output of Y0 will be decided by circuit ❷ ,
i.e. decided by ON/OFF of X10.

Numerical value, constant [K]/ [H]

Constant	Single-byte	K	Decimal	K-32,768–K32,767
	Double-byte			K-2,147,483,648–K2,147,483,647
	Single-byte	H	Hexadecimal	H0000–HFFFF
	Double-byte			H00000000–HFFFFFFFF

The PLC can use five types of numerical values to implement calculations based on its control tasks; the following is an explanation of the missions and functions of different numerical values.

Binary Number, BIN

The PLC's numerical operations and memory employ binary numbers. Binary nibbles and relevant terms are explained as follows:

bit	Bits are the fundamental units of binary values, and have a state of either 1 or 0
Nibble	Comprised of a series of 4 bits (such as b3–b0); can be used to express a one-nibble decimal number 0–9 or hexadecimal number: 0–F.
Byte	Comprised of a series of two nibbles (i.e. 8 bits, b7–b0); can express a hexadecimal number: 00–FF.
Word	Comprised of a series of two bytes (i.e. 16 bits, b15–b0); can express a hexadecimal number with four nibbles: 0000–FFFF.
Double Word	Comprised of a series of two words (i.e. 32 bits, b31–b0); can express a hexadecimal number with eight nibbles: 00000000–FFFFFFFF

Relationship between bits, digits, nibbles, words, and double words in a binary system (see figure below):

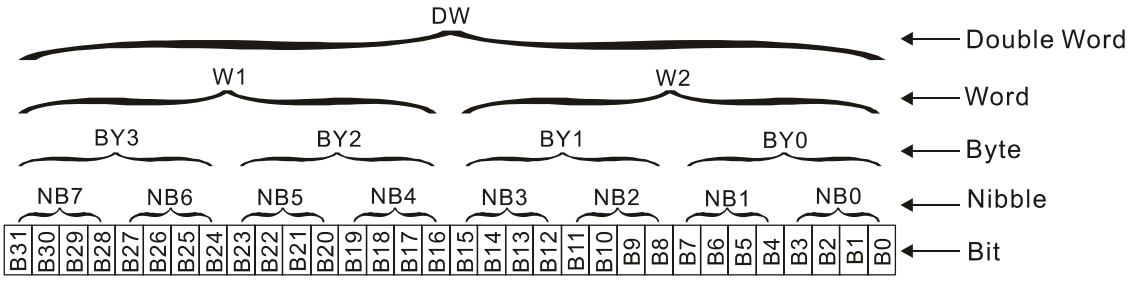

Octal Number, OCT

The external input and output terminals of a DVP-PLC are numbered using octal numbers

Example: External input: X0–X7，X10–X17…(Device number table);

External output: Y0–Y7，Y10–Y17…(Device number table)

Decimal Number, DEC

Decimal numbers are used for the following purposes in a PLC system:

☑ The setting values of timer T or counter C, such as TMR C0 K50. (K constant)

☑ The numbers of devices including M, T, C, or D, such as M10 or T30. (device number)

☑ Used as an operand in an application command, such as MOV K123 D0. (K constant)

Binary Code Decimal, BCD

Uses one nibble or 4 bits to express the data in a decimal number; a series of 16 bits can therefore express a decimal number with 4 nibbles. Chiefly used to read the input value of a fingerwheel numerical switch input or output a numerical value to a seven-segment display drive.

Hexadecimal Number, HEX

Applications of hexadecimal numbers in a PLC system: Used as operands in application commands, such as MOV H1A2B D0. (H constant)

Constant K

Decimal numbers are usually prefixed with a "K" in a PLC system, such as K100. This indicates that it is a decimal number with a numerical value of 100.

Exceptions: K can be combined with bit device X, Y, M, or S to produce data in the form of a nibble, byte, word, or double word, such as in the case of K2Y10 or K4M100. Here K1 represents a 4-bit combination, and K2–K4 variously represent 8, 12, and 16-bit combinations.

Constant H

Hexadecimal numbers are usually prefixed with the letter "H" in a PLC system, such as in the case of H100, which indicates a hexadecimal number with a numerical value of 100.

Functions of auxiliary relays

Like an output relay Y, an auxiliary relay M has an output coil and contacts a and b, and the number of times they can be used in a program is unrestricted. Users can use an auxiliary relay M to configure the control circuit, but cannot use it to directly drive an external load. Auxiliary relays have the following two types of characteristics:

Ordinary auxiliary relays: Ordinary auxiliary relays will all revert to the Off state if a power outage occurs while the PLC is running, and will remain in the Off state if power is again turned down.

Special purpose auxiliary relays: Each special purpose auxiliary relay has its own specific use. Do not use any undefined special purpose auxiliary relays.

Timer functions

Timers take 100 ms as their timing units. When the timing method is an upper time limit, when the current timer value = set value, power will be sent to the output coil. Timer setting values consist of decimal K values, and the data register D can also serve as a setting value.

Actual timer setting time = timing units * set value

Counter features

Item	16-bit counter
Type	General Type
CT Direction:	Score
Setting	0–32,767
Designation of set value	Constant K or data register D
Change in current value	When the count reaches the set value, there is no longer a count
Output contact	When the count reaches the set value, the contact comes On and stays On
Reset	The current value reverts to 0 when an RST command is executed, and the contact reverts to Off
Contact actuation	All are actuated after the end of scanning

Counter functions

When a counter's counting pulse input signal goes Off→On, if the counter's current value is equal to the set value, the output coil will come On. The setting value will be a decimal K values, and the data register D can also serve as a setting value.

16-bit counter C0–C79:

- ☑ 16-bit counter setting range: K0–K32,767. (when K0 and K1 are identical, the output contact will immediately be On during the first count.)
- ☑ The current counter value will be cleared from an ordinary counter when power is shut off to the PLC.
- ☑ If the MOV command or WPLSoft is used to transmit a value greater than the set value to the C0 current value register, when the next X1 goes from Off→On, the C0 counter contact will change to On, and the current value will change to the set value.
- ☑ A counter's setting value may be directly set using a constant K or indirectly set using the value in register D (not including special data registers D1000–D1199 or D2000–D2799).
- ☑ If the set value employs a constant K, it may only be a positive number; the set value may be either a positive or a negative number if the value in data register D is used. The current counter value will change from 32,767 to -32,768 as the count continues to accumulate.

Example

```
LD      X0
RST     C0
LD      X1
CNT     C0   K5
LD      C0
OUT     Y0
```

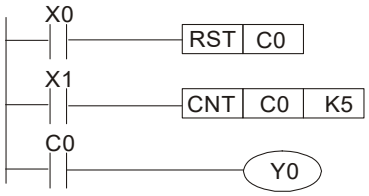

1. When X0=On and the RST command is executed, the current value of C0 will revert to 0, and the output contact will revert to Off.
2. When X1 changes from Off→On, the current value of the counter will execute an increase (add one).
3. When the count of counter C0 reaches the set value K5, the contact C0 will come On, and the current value of C0＝ set value =K5. Afterwards, signal C0 triggered by X1 cannot be received, and the current value of C0 will remain K5.
4.

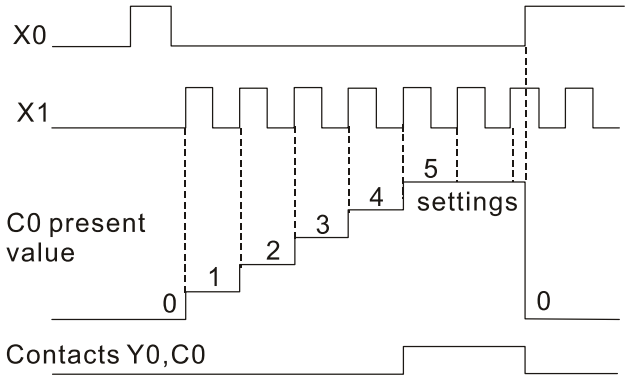

16-5-2 Introduction to special relay functions (special M)

R/W items: RO: read only function; RW: read and write function

Special M	Description of Function	R/W *
M1000	Operates monitor NO contact (contact a). NO while RUN, contact a. This contact is On while in the RUN state.	RO
M1001	Operates monitor NC contact (contact b). NC while RUN, contact b. This contact is Off while in the RUN state.	RO
M1002	Initiates a forward (the instant RUN is On) pulse. Initial pulse, contact a. Produces a forward pulse the moment RUN begins; its width = scan cycle	RO
M1003	Initiates a reverse (the instant RUN is Off) pulse. Initial pulse, contact a. Produces a reverse pulse the moment RUN ends; the pulse width = scan cycle	RO
M1004	Reserved	RO
M1005	Drive malfunction instructions	RO
M1006	Converter has no output (1 = no output, 0 = output)	RO
M1007	Drive direction FWD(0)/REV(1)	RO
M1008 – M1010	--	--
M1011	10 ms clock pulse, 5ms On / 5ms Off	RO
M1012	100 ms clock pulse, 50ms On / 50ms Off	RO
M1013	1 sec. clock pulse, 0.5s On / 0.5s Off	RO
M1014	1 min. clock pulse, 30s On / 30s Off	RO
M1015	Frequency attained (when used together with M1025)	RO
M1016	Parameter read/write error	RO
M1017	Parameter write successful	RO
M1018	--	--

Special M	Description of Function	R/W *
M1019	--	--
M1020	Zero flag	RO
M1021	Borrow flag	RO
M1022	Carry flag	RO
M1023	Divisor is 0	RO
M1024	--	--
M1025	Target drive frequency = set frequency (ON) Target drive frequency =0 (OFF)	RW
M1026	Drive operating direction FWD(OFF) / REV(ON)	RW
M1027	Drive Reset	RW
M1028	--	--
M1029	--	--
M1030	--	--
M1031	Compulsory setting of the current PID integral value equal to D1019 (0 change, 1 valid)	RW
M1032	Compulsory definition of FREQ command after PID control	RW
M1033	--	--
M1034	Initiates CANopen real-time control	RW
M1035	Initiates internal communications control	RW
M1036	Ignore calendar error	RW
M1037	--	--
M1038	MI8 count begins	RW
M1039	Reset MI8 count value	RW
M1040	Excitation (Servo On)	RW
M1041	--	--
M1042	Quick stop	RW
M1043	--	--
M1044	Pause (Halt)	RW
M1045 – M1047	--	--
M1048	Move to new position	RW
M1049	--	--
M1050	Absolute position / relative position (0: relative/1: absolute)	RW
M1051	--	--
M1052	Lock frequency (lock, frequency locked at the current operating frequency)	RW
M1053	--	--
M1054	Compulsory reset of absolute position	RW
M1055	Search Origin	RW
M1056	Excitation ready (Servo On Ready)	RO
M1057	--	--
M1058	On Quick Stopping	RO
M1059	CANopen Master setting complete	RO
M1060	CANopen Currently initializing slave station	RO
M1061	CANopen Slave station initialization failure	RO
M1062	--	--
M1063	Torque attained	RO
M1064	Target reached	RO
M1065	Read/write CANopen data time out	RO
M1066	Read/write CANopen data complete	RO
M1067	Read/write CANopen data successful	RO
M1068	Calendar calculation error	RO
M1069	--	--
M1070	Return home complete	RO
M1071	Homing error	RO

Special M	Description of Function	R/W *
M1072 – M1075	--	--
M1076	Calendar time error or refresh time out	RO
M1077	485 Read/write complete	RO
M1078	485 Read-write error	RO
M1079	485 Communications time out	RO
M1090	AUTO	RO
M1091	OFF	RO
M1092	HAND	RO
M1100	LOCAL	RO
M1101	REMOTE	RO
M1168	SBOV BCD and BIN mode switch	RW
M1260	PLC PID1 Enable	RW
M1262	PLC PID1 integral positive value limit	RW
M1270	PLC PID2 Enable	RW
M1272	PLC PID2 integral positive value limit	RW

16-5-3 Introduction to special register functions (special D)

Special D	Description of Function	R/W *
D1000	--	--
D1001	Device system program version	RO
D1002	Program capacity	RO
D1003	Total program memory content	RO
D1004 – D1009	--	--
D1010	Current scan time (units: 0.1 ms)	RO
D1011	Minimum scan time (units: 0.1 ms)	RO
D1012	Maximum scan time (units: 0.1 ms)	RO
D1013 – D1017	--	--
D1018	Current integral value	RO
D1019	Compulsory setting of PID I integral	RW
D1020	Output frequency (0.000–600.00Hz)	RO
D1021	Output current (####.#A)	RO
D1022	AI AO DI DO Expansion card number 0: No expansion card 4: AC input card (6 in) (EMC-D611A) 5: Digital I/O Card (4 in 2 out) (EMC-D42A) 6: Relay card (6 out) (EMC-R6AA) 11: Analog I/O Card (2 in 2 out) (EMC-A22A)	RO
D1023	Communication expansion card number 0: No expansion card 1: DeviceNet Slave (CMC-DN01) 2: Profibus-DP Slave (CMC-PD01) 3: CANopen Slave (EMC-COP01) 4: Modbus-TCP Slave (CMC-MOD01) 5: EtherNet/IP Slave (CMC-EIP01) 12: PROFINET Slave (CMC-PN01)	RO
D1024 – D1026	--	--

Special D	Description of Function	R/W *
D1027	PID calculation frequency command (frequency command after PID calculation)	RO
D1028	AVI value (0.00–100.00%)	RO
D1029	ACI value (0.0–100.00%)	RO
D1030	AUI value (-100.0–100.00%)	RO
D1031	C series: extension card AI10 (0.0–100.0%)	RO
D1032	C series: extension card AI11 (0.0–100.0%)	RO
D1033 – D1035	--	--
D1036	Servo error bit	RO
D1037	Drive output frequency	RO
D1038	DCBUS voltage	RO
D1039	Output voltage	RO
D1040	Analog output value AFM1 (-100.00–100.00%)	RW
D1041	C series: extension card AO10 (0.0–100.0%)	RW
D1042	C series: extension card AO11 (0.0–100.0%)	RW
D1043	Can be user-defined (will be displayed on panel when Pr. 00-04 is set as 28; display method is C xxx)	RW
D1044	--	-
D1045	Analog output value AFM2 (-100.00–100.00%)	RW
D1046 – D1049	--	--
D1050	Actual Operation Mode 0: Speed 1: Position 2: Torque 3: Homing Origin	RO
D1051	Encoder Pulses L	RO
D1052	Encoder Pulses H	RO
D1053	Actual torque	RO
D1054	MI8 current calculated count value (Low Word)	RO
D1055	MI8 current calculated count value (High Word)	RO
D1056	Rotational speed corresponding to MI8	RO
D1057	MI8's rotational speed ratio	RW
D1058	MI8 refresh rate (ms) corresponding to rotational speed	RW
D1059	Number of nibbles of rotational speed corresponding to MI8 (0–3)	RW
D1060	Operation Mode setting 0: Speed 1: Position 2: Torque 3: Homing Origin	RW
D1061	485 COM1 communications time out time (ms)	RW
D1062	Torque command (torque limit in speed mode)	RW
D1063	Year (Western calendar) (display range 2000–2099) (must use KPC-CC01)	RO
D1064	Week (display range 1–7) (must use KPC-CC01)	RO
D1065	Month (display range 1–12) (must use KPC-CC01)	RO
D1066	Day (display range 1–31) (must use KPC-CC01)	RO
D1067	Hour (display range 0–23) (must use KPC-CC01)	RO
D1068	Minute (display range 0–59) (must use KPC-CC01)	RO
D1069	Second (display range 0–59) (must use KPC-CC01)	RO
D1100	Target frequency	RO
D1101	Target frequency (must be operating)	RO
D1102	Reference frequency	RO
D1103	Target L	RO
D1104	Target H	RO

Special D	Description of Function	R/W *
D1105	Target torque	RO
D1106	--	--
D1107	π(Pi) Low word	RO
D1108	π(Pi) High word	RO
D1109	Random number	RO
D1110	Internal node communications number (set number of slave stations to be controlled)	RW
D1111	Actual position (Low word)	RO
D1112	Actual position (High word)	RO
D1113	--	RO
D1114	--	--
D1115	Internal node synchronizing cycle (ms)	RO
D1116	Internal node error (bit0 = Node 0, bit1 = Node 1,…bit7 = Node 7)	RO
D1117	Internal node online correspondence (bit0 = Node 0, bit1 = Node 1,…bit7 = Node 7)	RO
D1118	--	--
D1119	--	--
D1120	Internal node 0 control command	RW
D1121	Internal node 0 mode	RW
D1122	Internal node 0 reference command L	RW
D1123	Internal node 0 reference command H	RW
D1124	--	--
D1125	--	--
D1126	Internal node 0 status	RO
D1127	Internal node 0 reference status L	RO
D1128	Internal node 0 reference status H	RO
D1129	--	--
D1130	Internal node 1 control command	RW
D1131	Internal node 1 mode	RW
D1132	Internal node 1 reference command L	RW
D1133	Internal node 1 reference command H	RW
D1134	--	--
D1135	--	--
D1136	Internal node 1 status	RO
D1137	Internal node 1 reference status L	RO
D1138	Internal node 1 reference status H	RO
D1139	--	--
D1140	Internal node 2 control command	RW
D1141	Internal node 2 mode	RW
D1142	Internal node 2 reference command L	RW
D1143	Internal node 2 reference command H	RW
D1144	--	--
D1145	--	--
D1146	Internal node 2 status	RO
D1147	Internal node 2 reference status L	RO
D1148	Internal node 2 reference status H	RO
D1149	--	--
D1150	Internal node 3 control command	RW
D1151	Internal node 3 mode	RW
D1152	Internal node 3 reference command L	RW
D1153	Internal node 3 reference command H	RW
D1154	--	--
D1155	--	--
D1156	Internal node 3 status	RO
D1157	Internal node 3 reference status L	RO

Special D	Description of Function	R/W *
D1158	Internal node 3 reference status H	RO
D1159	--	--
D1160	Internal node 4 control command	RW
D1161	Internal node 4 mode	RW
D1162	Internal node 4 reference command L	RW
D1163	Internal node 4 reference command H	RW
D1164	--	--
D1165	--	--
D1166	Internal node 4 status	RO
D1167	Internal node 4 reference status L	RO
D1168	Internal node 4 reference status H	RO
D1169	--	--
D1170	Internal node 5 control command	RW
D1171	Internal node 5 mode	RW
D1172	Internal node 5 reference command L	RW
D1173	Internal node 5 reference command H	RW
D1174	--	RW
D1175	--	--
D1176	Internal node 5 status	--
D1177	Internal node 5 reference status L	RO
D1178	Internal node 5 reference status H	RO
D1179	--	--
D1180	Internal node 6 control command	RW
D1181	Internal node 6 mode	RW
D1182	Internal node 6 reference command L	RW
D1183	Internal node 6 reference command H	RW
D1184	--	--
D1185	--	--
D1186	Internal node 6 status	RO
D1187	Internal node 6 reference status L	RO
D1188	Internal node 6 reference status H	RO
D1189	--	--
D1190	Internal node 7 control command	RW
D1191	Internal node 7 mode	RW
D1192	Internal node 7 reference command L	RW
D1193	Internal node 7 reference command H	RW
D1194	--	--
D1195	--	--
D1196	Internal node 7 status	RO
D1197	Internal node 7 reference status L	RO
D1198	Internal node 7 reference status H	RO
D1199	--	--

Special D	Description of Function	Default	R/W *
D1200	PID 1 Mode: 0: Basic mode	0	RW
D1201	PID 1 Target selection: 0: Refer to D1202 1: AVI 2: ACI 3: AUI	0	RW
D1202	PID 1 Target value (0.00%–100.00%)	5000	RW

Special D	Description of Function	Default	R/W *
D1203	PID 1 Feedback selection: 0: Refer to D1204 1: AVI 2: ACI 3: AUI	1	RW
D1204	PID 1 Feedback value (0.00%–100.00%)	0	RW
D1205	PID 1 P value (decimal 2 points)	10	RW
D1206	PID 1 I value (decimal 2 points)	1000	RW
D1207	PID 1 D value (decimal 2 points)	0	RW
D1209	PID 1 Max. limit	10000	RW
D1215	PID 1 Calculation (decimal 2 points)	0	RO
D1220	PID2 Mode: 0: Basic mode	0	RW
D1221	PID 2 Target selection: 0: Refer to D1202 1: AVI 2: ACI 3: AUI	0	RW
D1222	PID 2 Target value (0.00%–100.00%)	5000	RW
D1223	PID 2 Feedback selection: 0: Refer to D1204 1: AVI 2: ACI 3: AUI	1	RW
D1224	PID 2 Feedback value (0.00%–100.00%)	0	RW
D1225	PID 2 P value (decimal 2 points)	10	RW
D1226	PID 2 I value (decimal 2 points)	1000	RW
D1227	PID 2 D value (decimal 2 points)	0	RW
D1229	PID 2 Max. limit	10000	RW
D1235	PID 2 Calculation (decimal 2 points)	0	RO

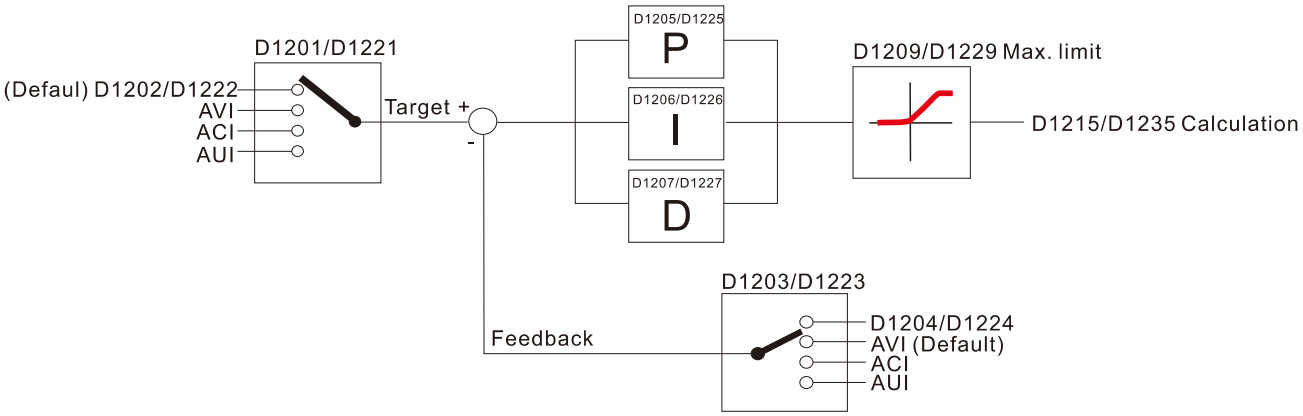

The following is CANopen Master's special D (Allow writing only when PLC is in STOP state)

n = 0–7

Special D	Description of Function	PDO Map	Power off Memory	Default	R/W
D1070	Channel opened by CANopen initialization (bit0=Machine code0 …)	NO	NO	0	R
D1071	Error channel occurring in CANopen initialization process (bit0=Machine code0 …)	NO	NO	0	R
D1072	Reserved	-	-		-
D1073	CANopen break channel (bit0=Machine code0 …)	NO	NO		R
D1074	Error code of master error 0: No error 1: Slave station setting error 2: Synchronizing cycle setting error (too small)	NO	NO	0	R
D1075	Reserved	-	-		-
D1076	SDO error message (main index value)	NO	NO		R
D1077	SDO error message (secondary index value)	NO	NO		R
D1078	SDO error message (error code)	NO	NO		R
D1079	SDO error message (error code)	NO	NO		R
D1080	Reserved	-	-		-
D1081 – D1086	Reserved	-	-		-
D1087 – D1089	Reserved	-	-		-
D1090	Synchronizing cycle setting	NO	YES	4	RW
D1091	Sets slave station On or Off (bit 0–bit 7 correspond to slave stations number 0–7)	NO	YES	FFFFH	RW
D1092	Delay before start of initialization	NO	YES	0	RW
D1093	Break time detection	NO	YES	1000ms	RW
D1094	Break number detection	NO	YES	3	RW
D1095 – D1096	Reserved	-	-		-
D1097	Corresponding real-time transmission type (PDO) Setting range: 1–240	NO	YES	1	RW
D1098	Corresponding real-time receiving type (PDO) Setting range: 1–240	NO	YES	1	RW
D1099	Initialization completion delay time Setting range: 1–60000 sec.	NO	YES	15 sec.	RW
D2000+100*n	Station number n of slave station Setting range: 0–127 0: No CANopen function	NO	YES	0	RW

The C2000 Plus supports 8 slave stations under the CANopen protocol; each slave station occupies 100 special D locations; stations are numbered 1–8, total of 8 stations.

Explanation of slave station number

Slave station no. 1	D2000	Node ID
	D2001	Slave station no. 1 torque restrictions
	–	–
	D2099	Address 4(H) corresponding to receiving channel 4
Slave station no. 2	D2100	Node ID
	D2101	Slave station no. 2 torque restrictions
	–	–
	D2199	Address 4(H) corresponding to receiving channel 4
Slave station no. 3	D2200	Node ID
	D2201	Slave station no. 3 torque restrictions
	–	–
	D2299	Address 4(H) corresponding to receiving channel 4
	⇩	
Slave station no. 8	D2700	Node ID
	D2701	Slave station no. 8 torque restrictions
	–	–
	D2799	Address 4(H) corresponding to receiving channel 4

1. The range of n is 0–7
2. ●Indicates PDOTX, ▲Indicates PDORX; unmarked special D can be refreshed using the CANFLS command

Special D	Description of Function	Default:	R/W
D2000+100*n	Station number n of slave station Setting range: 0–127 0: No CANopen function	0	RW
D2002+100*n	Manufacturer code of slave station number n (L)	0	R
D2003+100*n	Manufacturer code of slave station number n (H)	0	R
D2004+100*n	Manufacturer's product code of slave station number n (L)	0	R
D2005+100*n	Manufacturer's product code of slave station number n (H)	0	R

Basic definitions

Special D	Description of Function	Default:	PDO Mapping	PDO Default:				R/W
				1	2	3	4	
D2006+100*n	Communications break handling method of slave station number n	0	6007H–0010H					RW
D2007+100*n	Error code of slave station number n error	0	603FH–0010H					R
D2008+100*n	Control word of slave station number n	0	6040H–0010H	●		●	●	RW
D2009+100*n	Status word of slave station number n	0	6041H–0010H	▲		▲	▲	R
D2010+100*n	Control mode of slave station number n	2	6060H–0008H					RW
D2011+100*n	Actual mode of slave station number n	2	6061H–0008H					R

Velocity Control

Slave station number n=0–7

Special D	Description of Function	Default:	PDO Mapping	PDO Default:				R/W
				1	2	3	4	
D2001+100*n	Torque restriction on slave station number n	0	6072H–0010H					RW
D2012+100*n	Target speed of slave station number n	0	6042H–0010H	●				RW
D2013+100*n	Actual speed of slave station number n	0	6043H–0010H	▲				R
D2014+100*n	Error speed of slave station number n	0	6044H–0010H					R
D2015+100*n	Acceleration time of slave station number n	1000	604FH–0020H					R
D2016+100*n	Deceleration time of slave station number n	1000	6050H–0020H					RW

Torque control

Slave station number n=0–7

Special D	Description of Function	Default:	PDO Mapping	PDO Default:				R/W
				1	2	3	4	
D2017+100*n	Target torque of slave station number n	0	6071H–0010H				●	RW
D2018+100*n	Actual torque of slave station number n	0	6077H–0010H				▲	R
D2019+100*n	Actual current of slave station number n	0	6078H–0010H					R

Position control

Slave station number n=0–7

Special D	Description of Function	Default:	PDO Mapping	PDO Default:				R/W
				1	2	3	4	
D2020+100*n	Target of slave station number n (L)	0	607AH–0020H			●		RW
D2021+100*n	Target of slave station number n (H)	0						RW
D2022+100*n	Actual position of slave station number n (L)	0	6064H–0020H			▲		R
D2023+100*n	Actual position of slave station number n (H)	0						R
D2024+100*n	Speed chart of slave station number n (L)	10000	6081H–0020H					RW
D2025+100*n	Speed chart of slave station number n (H)	0						RW

20XXH correspondences: MI MO AI AO

Slave station number n=0–7

Special D	Description of Function	Default:	PDO Mapping	PDO Default:				R/W
				1	2	3	4	
D2026+100*n	MI status of slave station number n	0	2026H–0110H		▲			RW
D2027+100*n	MO setting of slave station number n	0	2026H–4110H		●			RW
D2028+100*n	AI1 status of slave station number n	0	2026H–6110H		▲			RW
D2029+100*n	AI2 status of slave station number n	0	2026H–6210H		▲			RW
D2030+100*n	AI3 status of slave station number n	0	2026H–6310H		▲			RW
D2031+100*n	AO1 status of slave station number n	0	2026H–A110H		●			RW
D2032+100*n	AO2 status of slave station number n	0	2026H–A210H		●			RW
D2033+100*n	AO3 status of slave station number n	0	2026H–A310H		●			RW

PDO reflection length setting:

Special D	Description of Function	Default:	R/W
D2034+100*n	Real-time transmission setting of slave station number n	000AH	RW
D2067+100*n	Real-time reception setting of slave station number n	0000H	RW

16-5-4 PLC Communication address

Device	Range	Type	Address (Hex)
X	00–37 (Octal)	bit	0400–041F
Y	00–37 (Octal)	bit	0500–051F
T	00–159	bit/word	0600–069F
M	000–799	bit	0800–0B1F
M	1000–1079	bit	0BE8–0C37
C	0–79	bit/word	0E00–0E47
D	00–399	word	1000–118F
D	1000–1099	word	13E8–144B
D	2000–2799	word	17D0–1AEF

Command code that can be used

Function Code	Description of Function	Function target
01	Coil status read	Y,M,T,C
02	Input status read	X,Y,M,T,C
03	Read single unit of data	T,C,D
05	Compulsory single coil status change	Y,M,T,C
06	Write single unit of data	T,C,D
0F	Compulsory multiple coil status change	Y,M,T,C
10	Write multiple units of data	T,C,D

NOTE

When PLC functions have been activated, the C2000 Plus can match PLC and drive parameters; this method employs different addresses, drives (default station number is 1, PLC sets station number as 2)

16-6 Introduction to the Command Window

16-6-1 Overview of basic commands

Ordinary commands

Command code	Function	OPERAND	Execution speed (us)
LD	Load contact a	X, Y, M, T, C	0.8
LDI	Load contact b	X, Y, M, T, C	0.8
AND	Connect contact a in series	X, Y, M, T, C	0.8
ANI	Connect contact b in series	X, Y, M, T, C	0.8
OR	Connect contact a in parallel	X, Y, M, T, C	0.8
ORI	Connect contact b in parallel	X, Y, M, T, C	0.8
ANB	Series circuit block	N/A	0.3
ORB	Parallel circuit block	N/A	0.3
MPS	Save to stack	N/A	0.3
MRD	Stack read (pointer does not change)	N/A	0.3
MPP	Read stack	N/A	0.3

Output command

Command code	Function	OPERAND	Execution speed (us)
OUT	Drive coil	Y, M	1
SET	Action continues (ON)	Y, M	1
RST	Clear contact or register	Y, M, T, C, D	1.2

Timer, counter

Command code	Function	OPERAND	Execution speed (us)
TMR	16-bit timer	T-K or T-D commands	1.1
CNT	16-bit counter	C-K or C-D (16-bit)	0.5

Main control command

Command code	Function	OPERAND	Execution speed (us)
MC	Common series contact connection	N0–N7	0.4
MCR	Common series contact release	N0–N7	0.4

Contact rising edge / falling edge detection command

Command code	Function	OPERAND	Execution speed (us)
LDP	Start of forward edge detection action	X, Y, M, T, C	1.1
LDF	Start of reverse edge detection action	X, Y, M, T, C	1.1
ANDP	Forward edge detection series connection	X, Y, M, T, C	1.1
ANDF	Reverse edge detection series connection	X, Y, M, T, C	1.1
ORP	Forward edge detection parallel connection	X, Y, M, T, C	1.1
ORF	Reverse edge detection parallel connection	X, Y, M, T, C	1.1

Upper/lower differential output commands

Command code	Function	OPERAND	Execution speed (us)
PLS	Upper differential output	Y, M	1.2
PLF	Lower differential output	Y, M	1.2

Stop command

Command code	Function	OPERAND	Execution speed (us)
END	Program conclusion	N/A	0.2

Other commands

Command code	Function	OPERAND	Execution speed (us)
NOP	No action	N/A	0.2
INV	Inverse of operation results	N/A	0.2
P	Index	P	0.3

16-6-2 Detailed explanation of basic commands

Command	Function					
LD	Load contact a					
Operand	X0–X17	Y0–Y17	M0–M799	T0–159	C0–C79	D0–D399
	✓	✓	✓	✓	✓	—

Explanation: The LD command is used for contact a starting at the left busbar or contact a starting at a contact circuit block; its function is to save current content and save the acquired contact status in the cumulative register.

Example: Ladder diagram:

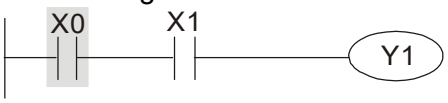

Command code:		Description:
LD	**X0**	Load Contact a of X0
AND	X1	Create series connection to contact a of X1
OUT	Y1	Drive Y1 coil

Command	Function					
LDI	Load contact b					
Operand	X0–X17	Y0–Y17	M0–M799	T0–159	C0–C79	D0–D399
	✓	✓	✓	✓	✓	—

Explanation: The LDI command is used for contact b starting at the left busbar or contact b starting at a contact circuit block; its function is to save current content and save the acquired contact status in the cumulative register.

Example: Ladder diagram:

Command code:		Description:
LDI	**X0**	Load Contact b of X0
AND	X1	Create series connection to contact a of X1
OUT	Y1	Drive Y1 coil

Command	Function					
AND	Connect contact a in series					
Operand	X0–X17	Y0–Y17	M0–M799	T0–159	C0–C79	D0–D399
	✓	✓	✓	✓	✓	—

Explanation: The AND command is used to create a series connection to contact a; first reads current status of the designated series contact and logical operation results before contact in order to perform "AND" operation; saves results in cumulative register.

Example: Ladder diagram:

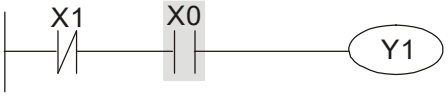

Command code:		Description:
LDI	X1	Load Contact b of X1
AND	**X0**	Create series connection to contact a of X0
OUT	Y1	Drive Y1 coil

Command	Function					
ANI	Connect contact b in series					
Operand	X0–X17	Y0–Y17	M0–M799	T0–159	C0–C79	D0–D399
	✓	✓	✓	✓	✓	—

Explanation

The ANI command is used to create a series connection to contact b; its function is to first read current status of the designated series contact and logical operation results before contact in order to perform "AND" operation; saves results in cumulative register.

Example

Ladder diagram:

Command code:		Description:
LD	X1	Load Contact a of X1
ANI	**X0**	Create series connection to contact b of X0
OUT	Y1	Drive Y1 coil

Command	Function					
OR	Connect contact a in parallel					
Operand	X0–X17	Y0–Y17	M0–M799	T0–159	C0–C79	D0–D399
	✓	✓	✓	✓	✓	—

Explanation

The OR command is used to establish a parallel connection to contact a; its function is to first read current status of the designated series contact and logical operation results before contact in order to perform "OR" operation; saves results in cumulative register.

Example

Ladder diagram:

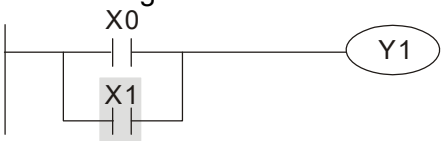

Command code:		Description:
LD	X0	Load Contact a of X0
OR	**X1**	Create series connection to contact a of X1
OUT	Y1	Drive Y1 coil

Command	Function					
ORI	Connect contact b in parallel					
Operand	X0–X17	Y0–Y17	M0–M799	T0–159	C0–C79	D0–D399
	✓	✓	✓	✓	✓	—

Explanation

The ORI command is used to establish a parallel connection to contact a; its function is to first read current status of the designated series contact and logical operation results before contact in order to perform "OR" operation; saves results in cumulative register.

Example

Ladder diagram:

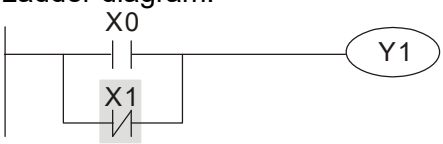

Command code:		Description:
LD	X0	Load Contact a of X0
ORI	**X1**	Create series connection to contact b of X1
OUT	Y1	Drive Y1 coil

Command	Function
ANB	Series circuit block
Operand	N/A

Explanation

ANB performs an "AND" operation on the previously saved logic results and the current cumulative register content.

Example

Ladder diagram:

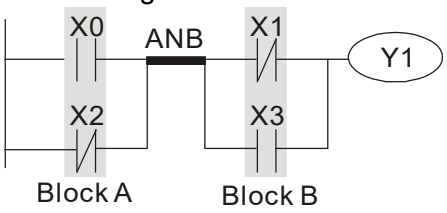

Command code:		Description:
LD	X0	Load Contact a of X0
ORI	X2	Establish parallel connection to contact b of X2
LDI	X1	Load Contact b of X1
OR	X3	Establish parallel connection to contact a of X3
ANB		Series circuit block
OUT	Y1	Drive Y1 coil

Command	Function
ORB	Parallel circuit block
Operand	N/A

Explanation: ORB performs an "OR" operation on the previously saved logic results and the current cumulative register content.

Example: Ladder diagram:

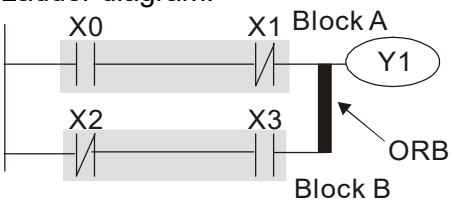

Command code:		Description:
LD	X0	Load Contact a of X0
ANI	X1	Establish parallel connection to contact b of X1
LDI	X2	Load Contact b of X2
AND	X3	Establish parallel connection to contact a of X3
ORB		Parallel circuit block
OUT	Y1	Drive Y1 coil

Command	Function
MPS	Save to stack
Operand	N/A

Explanation: Save current content of cumulative register to the stack. (Add one to stack pointer)

Command	Function
MRD	Read stack (pointer does not change)
Operand	N/A

Explanation: Reads stack content and saves to cumulative register. (Stack pointer does not change)

Command	Function
MPP	Read stack
Operand	N/A

Explanation: Retrieves result of previously-save logical operation from the stack, and saves to cumulative register. (Subtract one from stack pointer)

Example: Ladder diagram:

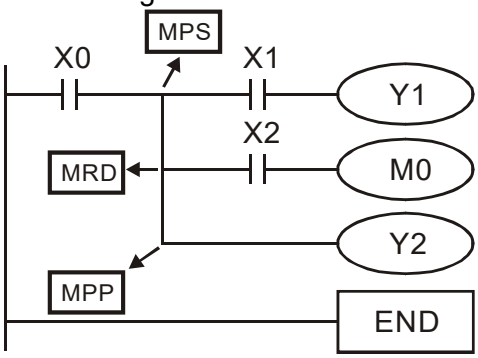

Command code:		Description:
LD	X0	Load Contact a of X0
MPS		Save to stack
AND	X1	Create series connection to contact a of X1
OUT	Y1	Drive Y1 coil
MRD		Read stack (pointer does not change)
AND	X2	Create series connection to contact a of X2
OUT	M0	Drive M0 coil
MPP		Read stack
OUT	Y2	Drive Y2 coil
END		Program conclusion

Command	Function					
OUT	Drive coil					
Operand	X0–X17	Y0–Y17	M0–M799	T0–159	C0–C79	D0–D399
	—	✓	✓	—	—	—

Explanation

Outputs result of logical operation before OUT command to the designated element.
Coil contact action:

Result:	Out command		
	Coil	Access Point:	
		Contact a (NO)	Contact b (NC)
FALSE	Off	Not conducting	Conducting
TRUE	On	Conducting	Not conducting

Example

Ladder diagram:

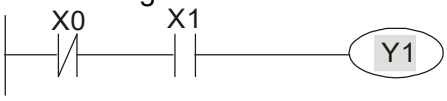

Command code:		Description:
LD	X0	Load Contact b of X0
AND	X1	Establish parallel connection to contact a of X1
OUT	**Y1**	Drive Y1 coil

Command	Function					
SET	Action continues (ON)					
Operand	X0–X17	Y0–Y17	M0–M799	T0–159	C0–C79	D0–D399
	—	✓	✓	—	—	—

Explanation

When the SET command is driven, the designated element will be set as On, and will be maintained in an On state, regardless of whether the SET command is still driven. The RST command can be used to set the element as Off.

Example

Ladder diagram:

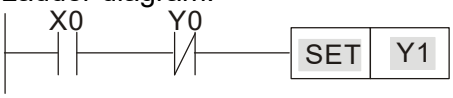

Command code:		Description:
LD	X0	Load Contact a of X0
AN	Y0	Establish parallel connection to contact b of Y0
SET	**Y1**	Action continues (ON)

Command	Function					
RST	Clear contact or register					
Operand	X0–X17	Y0–Y17	M0–M799	T0–159	C0–C79	D0–D399
	—	✓	✓	✓	✓	✓

Explanation

When the RST command is driven, the action of the designated element will be as follows:

Element	Mode
Y, M	Both coil and contact will be set as Off.
T, C	The current timing or count value will be set as 0, and both the coil and contact will be set as Off.
D	The content value will be set as 0.

If the RST command has not been executed, the status of the designated element will remain unchanged.

Example

Ladder diagram:

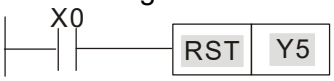

Command code:		Description:
LD	X0	Load Contact a of X0
RST	**Y5**	Clear contact or register

Command	Function	
TMR	16-bit timer	
Operand	T-K	T0–T159, K0–K32,767
	T-D	T0–T159, D0–D399

Explanation

When the TMR command is executed, the designated timer coil will be electrified, and the timer will begin timing. The contact's action will be as follows when the timing value reaches the designated set value (timing value >= set value):

NO (Normally Open) contact	Closed
NC (Normally Close) contact	Open

If the RST command has not been executed, the status of the designated element will remain unchanged.

Example

Ladder diagram:

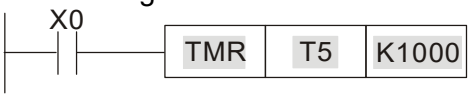

Command code:		Description:
LD	X0	Load Contact a of X0
TMR	T5 K1000	T5 timer Set value as K1000

Command	Function	
CNT	16-bit counter	
Operand	C-K	C0–C79, K0–K32,767
	C-D	C0–C79, D0–D399

Explanation

When the CNT command is executed from Off→On, this indicates that the designated counter coil goes from no power → electrified, and 1 will be added to the counter's count value; when the count reaches the designated value (count value = set value), the contact will have the following action:

NO (Normally Open) contact	Closed
NC (Normally Close) contact	Open

After the count value has been reached, the contact and count value will both remain unchanged even if there is continued count pulse input. Please use the RST command if you wish to restart or clear the count.

Example

Ladder diagram:

Command code:		Description:
LD	X0	Load Contact a of X0
CNT	**C2 K100**	C2counter Set value as K100

Command	Function
MC/MCR	Connect/release a common series contact
Operand	N0–N7

Explanation

MC is the main control initiation command, and any commands between MC and MCR will be executed normally. When the MC command is Off, any commands between MC and MCR will act as follows:

Determination of commands	Description
Ordinary timer	The timing value will revert to 0, the coil will lose power, and the contact will not operate
Counter	The coil will lose power, and the count value and contact will stay in their current state
Coil driven by OUT command	None receive power
Elements driven by SET, RST commands	Will remain in their current state
Applications commands	None are actuated

MCR is the main control stop command, and is placed at the end of the main control program. There may not be any contact commands before the MCR command.

The MC-MCR main control program commands support a nested program structure with a maximum only 8 levels; use in the order N0–N7, please refer to the following program:

Example

Ladder diagram:

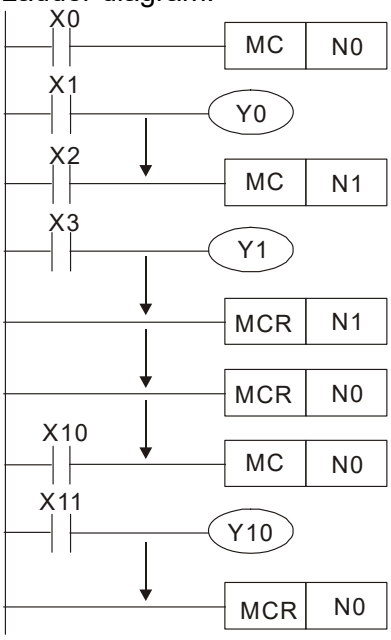

Command code:		Description:
LD	X0	Load Contact a of X0
MC	**N0**	Connection of N0 common series contact
LD	X1	Load Contact a of X1
OUT	Y0	Drive Y0 coil
:		
LD	X2	Load Contact a of X2
MC	**N1**	Connection of N1 common series contact
LD	X3	Load Contact a of X3
OUT	Y1	Drive Y1 coil
:		
MCR	**N1**	Release N1 common series contact
:		
MCR	**N0**	Release N0 common series contact
:		
LD	X10	Load Contact a of X10
MC	**N0**	Connection of N0 common series contact
LD	X11	Load Contact a of X11
OUT	Y10	Drive Y10 coil
:		
MCR	**N0**	Release N0 common series contact

Command	Function					
LDP	Start of forward edge detection action					
Operand	X0–X17	Y0–Y17	M0–M799	T0–159	C0–C79	D0–D399
	✓	✓	✓	✓	✓	—

Explanation

The LDP command has the same usage as LD, but its action is different; its function is to save current content, while also saving the detected state of the rising edge of the contact to the cumulative register.

Example

Ladder diagram:

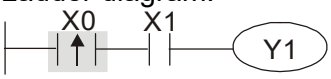

Command code:		Description:
LDP	**X0**	Start of X0 forward edge detection action
AND	X1	Create series connection to contact a of X1
OUT	Y1	Drive Y1 coil

Remark

Please refer to the function specifications table for each device in series for the scope of usage of each operand.
A rising edge contact will be TRUE after power is turned on if the rising edge contact is On before power is turned on to the PLC.

Command	Function					
LDF	Start of reverse edge detection action					
Operand	X0–X17	Y0–Y17	M0–M799	T0–159	C0–C79	D0–D399
	✓	✓	✓	✓	✓	—

Explanation

The LDF command has the same usage as LD, but its action is different; its function is to save current content while also saving the detected state of the falling edge of the contact to the cumulative register.

Example

Ladder diagram:

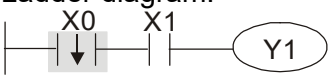

Command code:		Description:
LDF	**X0**	Start of X0 reverse edge detection action
AND	X1	Create series connection to contact a of X1
OUT	Y1	Drive Y1 coil

Command	Function					
ANDP	Forward edge detection series connection					
Operand	X0–X17	Y0–Y17	M0–M799	T0–159	C0–C79	D0–D399
	✓	✓	✓	✓	✓	—

Explanation: The ANDP command used for a contact rising edge detection series connection.

Example

Ladder diagram:

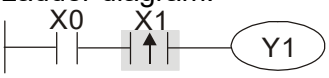

Command code:		Description:
LD	X0	Load Contact a of X0
ANDP	**X1**	X1 Forward edge detection series connection
OUT	Y1	Drive Y1 coil

Command	Function					
ANDF	Reverse edge detection series connection					
Operand	X0–X17	Y0–Y17	M0–M799	T0–159	C0–C79	D0–D399
	✓	✓	✓	✓	✓	—

Explanation: The ANDF command is used for a contact falling edge detection series connection.

Example

Ladder diagram:

Command code:		Description:
LD	X0	Load Contact a of X0
ANDF	**X1**	X1 Reverse edge detection series connection
OUT	Y1	Drive Y1 coil

Command	Function					
ORP	Forward edge detection parallel connection					
Operand	X0–X17	Y0–Y17	M0–M799	T0–159	C0–C79	D0–D399
	✓	✓	✓	✓	✓	—

Explanation: The ORP command is used for a contact rising edge detection parallel connection.

Example

Ladder diagram:

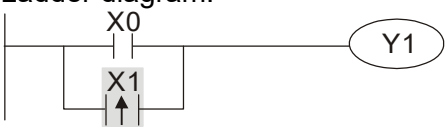

Command code:		Description:
LD	X0	Load Contact a of X0
ORP	**X1**	X1 Forward edge detection parallel connection
OUT	Y1	Drive Y1 coil

Command	Function					
ORF	Reverse edge detection parallel connection					
Operand	X0–X17	Y0–Y17	M0–M799	T0–159	C0–C79	D0–D399
	✓	✓	✓	✓	✓	—

Explanation: The ORF command is used for contact falling edge detection parallel connection.

Example

Ladder diagram:

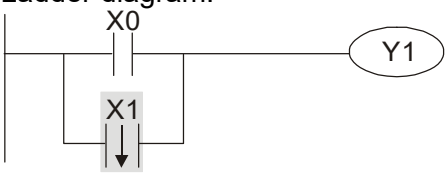

Command code:		Description:
LD	X0	Load Contact a of X0
ORF	**X1**	X1 Reverse edge detection parallel connection
OUT	Y1	Drive Y1 coil

Command	Function					
PLS	Upper differential output					
Operand	X0–X17	Y0–Y17	M0–M799	T0–159	C0–C79	D0–D399
	—	✓	✓	—	—	—

Explanation

Upper differential output commands. When X0=Off→On (positive edge-triggered), the PLS command will be executed, and M0 will send one pulse, with a pulse length consisting of one scanning period.

Example

Ladder diagram:

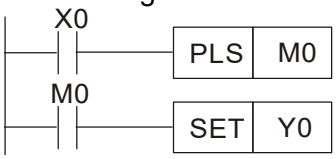

Time sequence diagram:

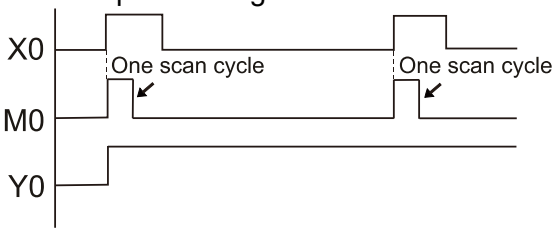

Command code:		Description:
LD	X0	Load Contact a of X0
PLS	**M0**	M0 Upper differential output
LD	M0	Load Contact a of M0
SET	Y0	Y0 Action continues (ON)

Command	Function					
PLF	Lower differential output					
Operand	X0–X17	Y0–Y17	M0–M799	T0–159	C0–C79	D0–D399
	—	✓	✓	—	—	—

Explanation

Lower differential output command. When X0= On→Off (negative edge-triggered), the PLF command will be executed, and M0 will send one pulse, with pulse length consisting of one scanning period.

Example

Ladder diagram:

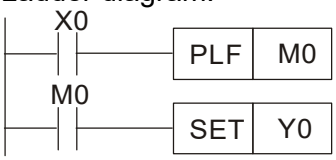

Time sequence diagram:

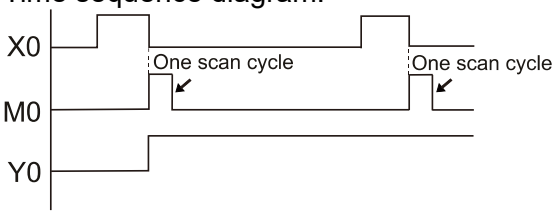

Command code:		Description:
LD	X0	Load Contact a of X0
PLF	**M0**	M0 Lower differential output
LD	M0	Load Contact a of M0
SET	Y0	Y0 Action continues (ON)

Command	Function
END	Program conclusion
Operand	N/A

Explanation

An END command must be added to the end of a ladder diagram program or command program. The PLC will scan from address 0 to the END command, and will return to address 0 and begins scanning again after execution.

Command	Function
NOP	No action
Operand	N/A

Explanation

The command NOP does not perform any operation in the program. Because execution of this command will retain the original logical operation results, it can be used in the following situation: the NOP command can be used instead of a command that is deleted without changing the program length.

Example

Ladder diagram:

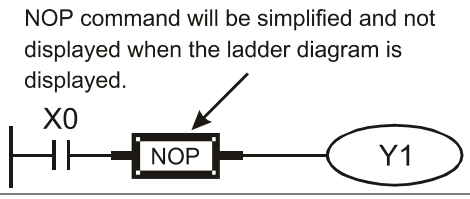

Command code:		Description:
LD	X0	Load Contact b of X0
NOP		No action
OUT	Y1	Drive Y1 coil

Command	Function
INV	Inverse of operation results
Operand	N/A

Explanation

Saves the result of the logic inversion operation prior to the INV command in the cumulative register.

Example

Ladder diagram:

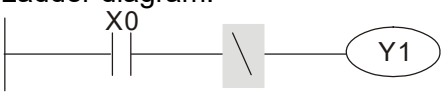

Command code:		Description:
LD	X0	Load Contact a of X0
INV		Inverse of operation results
OUT	Y1	Drive Y1 coil

Command	Function
P	Index
Operand	P0–P255

Explanation

Pointer P is used to subprogram call command API 01 CALL. User does not require starting from zero, but the number cannot be used repeatedly, otherwise an unpredictable error will occur.

Example

Ladder diagram:

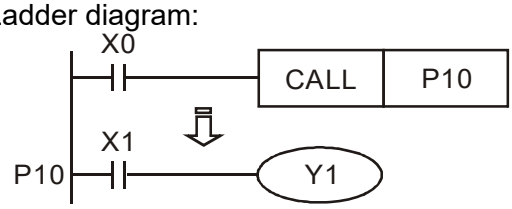

Command code:		Description:
LD	X0	Load Contact a of X0
CALL	P10	Call command CALL to P10
:		
P10		Pointer P10
LD	X1	Load Contact a of X1
OUT	Y1	Drive Y1 coil

16-6-3 Overview of application commands

Classification	API	Command code		P command	Function	STEPS	
		16 bit	32 bit			16 bit	32 bit
Circuit control	01	CALL	-	✓	Call subprogram	3	-
	2	SRET	-	-	Conclusion of subprogram	1	-
	06	FEND	-	-	Conclusion a main program	1	-
Send comparison	10	CMP	DCMP	✓	Compares set output	7	13
	11	ZCP	DZCP	✓	Range comparison	9	17
	12	MOV	DMOV	✓	Data movement	5	9
	13	SMOV	DSMOV	✓	Nibble movement	11	21
	15	BMOV	–	✓	Send all	7	–
Four logical operations	18	BCD	DBCD	✓	BIN to BCD transformation	5	9
	19	BIN	DBIN	✓	BCD to BIN transformation	5	9
	20	ADD	DADD	✓	BIN addition	7	13
	21	SUB	DSUB	✓	BIN subtraction	7	13
	22	MUL	DMUL	✓	BIN multiplication	7	13
	23	DIV	DDIV	✓	BIN division	7	13
	24	INC	DINC	✓	BIN add one	3	5
	25	DEC	DDEC	✓	BIN subtract one	3	5
Rotational displacement	30	ROR	DROR	✓	Right rotation	5	–
	31	ROL	DROL	✓	Left rotation	5	–
Data Process	40	ZRST	–	✓	Clear range	5	-
	41	DECO	DDECO	✓	Decoder	7	13
	42	ENCO	DENCO	✓	Encoder	7	13
	43	SUM	DSUM	✓	ON bit number	5	9
	44	BON	DBON	✓	ON bit judgement	7	13
	49	FLT	DFLT	✓	BIN whole number → binary floating point number transformation	5	9
Floating point operation	110	–	DECMP	✓	Comparison of binary floating point numbers	–	13
	111	–	DEZCP	✓	Comparison of binary floating point number range	–	17
	116	–	DRAD	✓	Angle → Diameter	–	9
	117	–	DDEG	✓	Diameter → angle	–	9
	120	–	DEADD	✓	Binary floating point number addition	–	13
	121	–	DESUB	✓	Binary floating point number subtraction	–	13
	122	–	DEMUL	✓	Binary floating point number multiplication	–	13
	123	–	DEDIV	✓	Binary floating point number division	–	13
	124	–	DEXP	✓	Binary floating point number obtain exponent	–	9
	125	–	DLN	✓	Binary floating point number obtain logarithm	–	9
	127	–	DESQR	✓	Binary floating point number find square root	–	9
	129	INT	DINT	✓	Binary floating point number → BIN whole number transformation	5	9
	130	–	DSIN	✓	Binary floating point number SIN operation	–	9
	131	–	DCOS	✓	Binary floating point number COS operation	–	9
	132	–	DTAN	✓	Binary floating point number TAN operation	–	9

Classification	API	Command code		P command	Function	STEPS	
		16 bit	32 bit			16 bit	32 bit
	133	–	DASIN	✓	Binary floating point number ASIN operation	–	9
	134	–	DACOS	✓	Binary floating point number ACOS operation	–	9
	135	–	DATAN	✓	Binary floating point number ATAN operation	–	9
	136	–	DSINH	✓	Binary floating point number SINH operation	–	9
	137	–	DCOSH	✓	Binary floating point number COSH operation	–	9
	138	–	DTANH	✓	Binary floating point number TANH operation	–	9
Other	147	SWAP	DSWAP	✓	Exchange the up/down 8 bits	3	5
communication	150	MODRW	–	✓	MODBUS read/write	7	–
Calendar	160	TCMP	–	✓	Compare calendar data	11	–
	161	TZCP	–	✓	Compare calendar data range	9	–
	162	TADD	–	✓	Calendar data addition	7	–
	163	TSUB	–	✓	Calendar data subtraction	7	–
	166	TRD	–	✓	Calendar data read	3	–
GRAY code	170	GRY	DGRY	✓	BIN→GRY code transformation	5	9
	171	GBIN	DGBIN	✓	GRY code →BIN transformation	5	9
Contact form logical operation	215	LD&	DLD&	-	Contact form logical operation LD#	5	9
	216	LD|	DLD|	-	Contact form logical operation LD#	5	9
	217	LD^	DLD^	-	Contact form logical operation LD#	5	9
	218	AND&	DAND&	-	Contact form logical operation AND#	5	9
	219	AND|	DAND|	-	Contact form logical operation AND#	5	9
	220	AND^	DAND^	-	Contact form logical operation AND#	5	9
	221	OR&	DOR&	-	Contact form logical operation OR#	5	9
	222	OR|	DOR|	-	Contact form logical operation OR#	5	9
	223	OR^	DOR^	-	Contact form logical operation OR#	5	9
Contact form compare command	224	LD＝	DLD＝	-	Contact form compare LD*	5	9
	225	LD＞	DLD＞	-	Contact form compare LD*	5	9
	226	LD＜	DLD＜	-	Contact form compare LD*	5	9
	228	LD＜＞	DLD＜＞	-	Contact form compare LD*	5	9
	229	LD＜＝	DLD＜＝	-	Contact form compare LD*	5	9
	230	LD＞＝	DLD＞＝	-	Contact form compare LD*	5	9
	232	AND＝	DAND＝	-	Contact form compare AND*	5	9
	233	AND＞	DAND＞	-	Contact form compare AND*	5	9
	234	AND＜	DAND＜	-	Contact form compare AND*	5	9
	236	AND＜＞	DAND＜＞	-	Contact form compare AND*	5	9
	237	AND＜＝	DAND＜＝	-	Contact form compare AND*	5	9
	238	AND＞＝	DAND＞＝	-	Contact form compare AND*	5	9
	240	OR＝	DOR＝	-	Contact form compare OR*	5	9
	241	OR＞	DOR＞	-	Contact form compare OR*	5	9
	242	OR＜	DOR＜	-	Contact form compare OR*	5	9
	244	OR＜＞	DOR＜＞	-	Contact form compare OR*	5	9
	245	OR＜＝	DOR＜＝	-	Contact form compare OR*	5	9
	246	OR＞＝	DOR＞＝	-	Contact form compare OR*	5	9

Classification	API	Command code		P command	Function	STEPS	
		16 bit	32 bit			16 bit	32 bit
Floating point contact form	275	-	FLD＝	-	Floating point number contact form compare LD*	-	9
	276	-	FLD＞	-	Floating point number contact form compare LD*	-	9
	277	-	FLD＜	-	Floating point number contact form compare LD*	-	9
Compare command	278	-	FLD＜＞	-	Floating point number contact form compare LD*	-	9
	279	-	FLD＜＝	-	Floating point number contact form compare LD*	-	9
	280	-	FLD＞＝	-	Floating point number contact form compare LD*	-	9
	281	-	FAND＝	-	Floating point number contact form compare AND*	-	9
	282	-	FAND＞	-	Floating point number contact form compare AND*	-	9
	283	-	FAND＜	-	Floating point number contact form compare AND*	-	9
	284	-	FAND＜＞	-	Floating point number contact form compare AND*	-	9
	285	-	FAND＜＝	-	Floating point number contact form compare AND*	-	9
	286	-	FAND＞＝	-	Floating point number contact form compare AND*	-	9
	287	-	FOR＝	-	Floating point number contact form compare OR*	-	9
	288	-	FOR＞	-	Floating point number contact form compare OR*	-	9
	289	-	FOR＜	-	Floating point number contact form compare OR*	-	9
	290	-	FOR＜＞	-	Floating point number contact form compare OR*	-	9
	291	-	FOR＜＝	-	Floating point number contact form compare OR*	-	9
	292	-	FOR＞＝	-	Floating point number contact form compare OR*	-	9
Drive special command	139	RPR	–	✓	Read servo parameter	5	–
	140	WPR	–	✓	Write servo parameter	5	–
	141	FPID	–	✓	Drive PID control mode	9	–
	142	FREQ	–	✓	Drive torque control mode	7	–
	262	–	DPOS	✓	Set target	-	5
	263	TORQ	–	✓	Set target torque	5	-
	261	CANRX	–	✓	Read CANopen slave station data	9	-
	264	CANTX	–	✓	Write CANopen slave station data	9	-
	265	CANFLS	–	✓	Refresh special D corresponding to CANopen	3	-
	320	ICOMR	DICOMR	✓	Internal communications read	9	17
	321	ICOMW	DICOMW	✓	Internal communications write	9	17
	323	WPRA	–	-	RAM write in drive parameters	5	-

16-6-4 Detailed explanation of applications commands

API 01	CALL P	S	Call subprogram

Bit device			Word device							
X	Y	M	K	H	KnX	KnY	KnM	T	C	D

Notes on operand usage:
The S operand can designate P
C2000 Plus series device: The S operand can designate P0-P63

16-bit command (3 STEP)			
CALL	Continuous execution type	CALLP	Pulse execution type
32-bit command			
—	—	—	—

Flag signal: none

Explanation

- **S**：Call subprogram pointer.
- Write the subprogram after the FEND command.
- The subprogram must end after the SRET command.
- Refer to the FEND command explanation and sample content for detailed command functions.

API 02	SRET P	–	Conclusion of subprogram

Bit device			Word device							
X	Y	M	K	H	KnX	KnY	KnM	T	C	D

Notes on operand usage:
No operand
A contact-driven command is not needed

16-bit command (1 STEP)			
FEND	Continuous execution type	—	—
32-bit command			
—	—	—	—

Flag signal: none

Explanation

- A contact-driven command is not needed. Automatically returns next command after CALL command
- Indicates end of subprogram. After end of subprogram, SRET returns to main program, and executes next command after the original call subprogram CALL command.
- Refer to the FEND command explanation and sample content for detailed command functions.

API 06		FEND		–	Conclusion a main program

	Bit device			Word device							
	X	Y	M	K	H	KnX	KnY	KnM	T	C	D

Notes on operand usage:
No operand
A contact-driven command is not needed

16-bit command (1 STEP)

FEND	Continuous execution type	–	–

32-bit command

–	–	–	–

Flag signal: none

Explanation

- This command indicates the end of the main program. It is the same as the END command when the PLC executes this command.
- The CALL command program must be written after the FEND command, and the SRET command added to the end of the subprogram.
- When using the FEND command, an END command is also needed. However, the END command must be placed at the end, after the main program and subprogram.

CALL command process

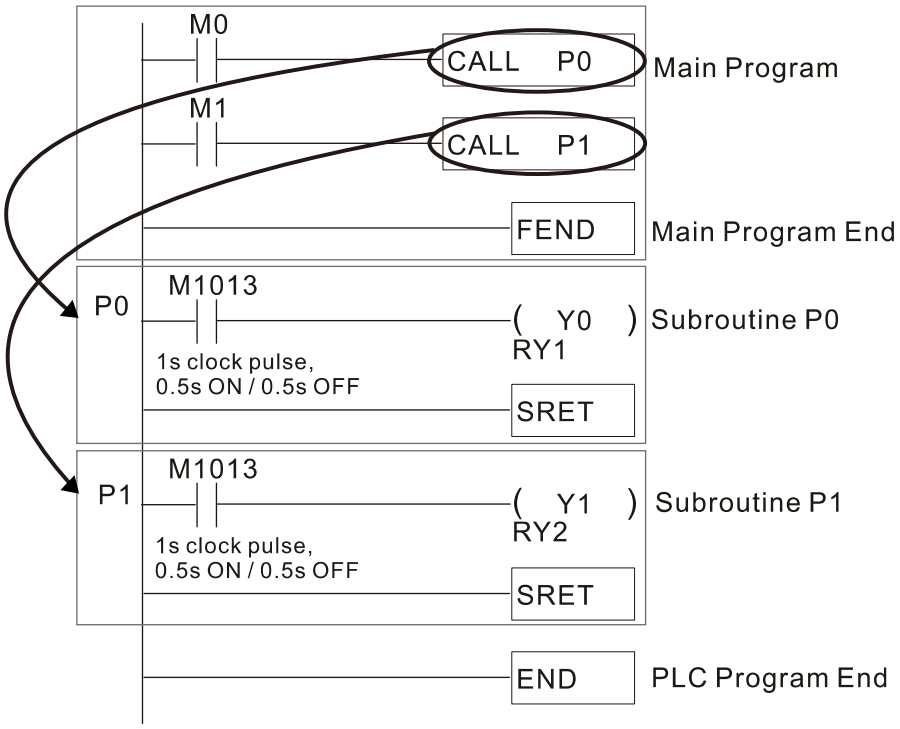

API 10	D	CMP	P	(S1) (S2) (D)	Compares set output

	Bit device			Word device							
	X	Y	M	K	H	KnX	KnY	KnM	T	C	D
S1				*	*	*	*	*	*	*	*
S2				*	*	*	*	*	*	*	*
D		*	*								

Notes on operand usage:
The operand D occupies three consecutive points

16-bit command (7 STEP)

CMP	Continuous execution type	CMPP	Pulse execution type

32-bit command (13 STEP)

DCMP	Continuous execution type	DCMPP	Pulse execution type

Flag signal: none

Explanation

- (S1): Compare value 1. (S2): Compare value 2. (D): Results of comparison.
- Compares the size of the content of operand (S1) and (S2); the results of comparison are expressed in (D).
- Size comparison is performed algebraically. All data is compared in the form of numerical binary values. Because this is a 16-bit command, when b15 is 1, this indicates a negative number.

Example

- When the designated device is Y0, it automatically occupies Y0, Y1 and Y2.
- When X10=On, the CMP command executes, and Y0, Y1 or Y2 will be On. When X10=Off, the CMP command will not execute, and the state of Y0, Y1 and Y2 will remain in the state prior to X10=Off.
- If ≥, ≤, or ≠ results are needed, they can be obtained via series/parallel connections of Y0–Y2.

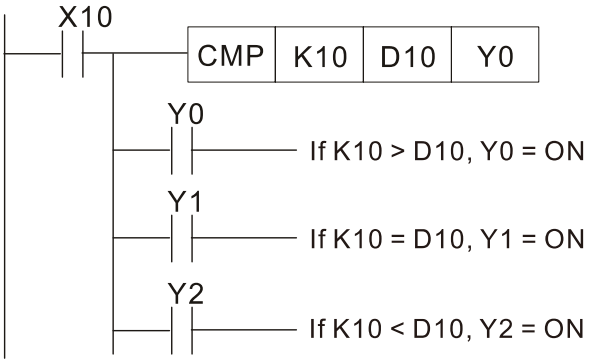

- To clear results of comparison, use the RST or ZRST command.

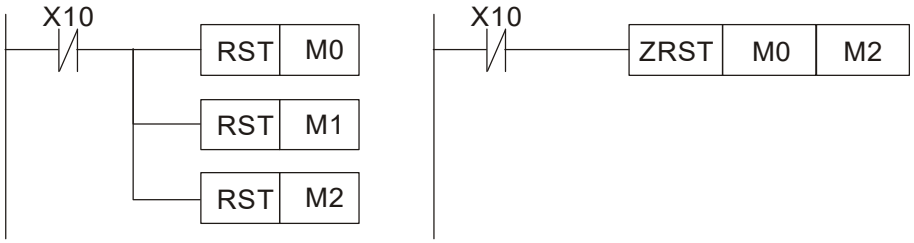

API 11	D	ZCP	P	(S1) (S2) (S) (D)	Range comparison

	Bit device			Word device							
	X	Y	M	K	H	KnX	KnY	KnM	T	C	D
S1				*	*	*	*	*	*	*	*
S2				*	*	*	*	*	*	*	*
S				*	*	*	*	*	*	*	*
D		*	*								

Notes on operand usage:
The content value of operand S1 is less than the content value of S2 operand
The operand D occupies three consecutive points

16-bit command (9 STEP)

ZCP	Continuous execution type	ZCPP	Pulse execution type

32-bit command (17 STEP)

DZCP	Continuous execution type	DZCPP	Pulse execution type

Flag signal: none

Explanation

- (S1): Lower limit of range comparison. (S2): Upper limit of range comparison. (S): Comparative value. (D): Results of comparison.
- When the comparative value (S) is compared with the lower limit (S1) and upper limit (S2), the results of comparison are expressed in (D).
- When lower limit (S1) > upper limit (S2), the command will use the lower limit (S1) to perform comparison with the upper and lower limit.
- Size comparison is performed algebraically. All data is compared in the form of numerical binary values. Because this is a 16-bit command, when b15 is 1, this indicates a negative number.

Example

- When the designated device is M0, it automatically occupies M0, M1 and M2.
- When X0=On, the ZCP command executes, and M0, M1 or M2 will be On. When X0=Off, the ZCP command will not execute, and the state of M0, M1 or M2 will remain in the state prior to X0=Off.
- If ≥, ≤, or ≠ results are needed, they can be obtained via series/parallel connections of M0–M2.

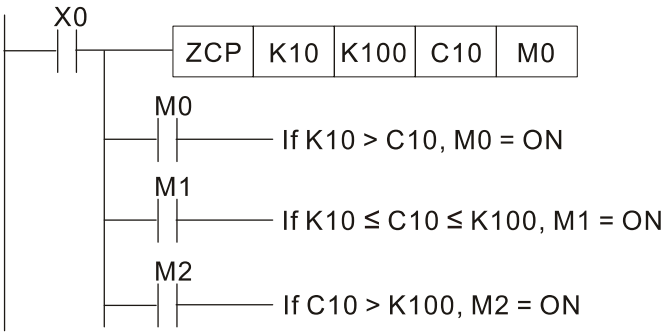

- To clear results of comparison, use the RST or ZRST command.

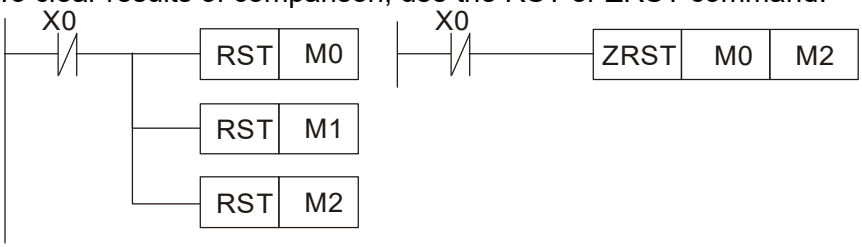

API 12	D	MOV	P	(S) (D)	Data movement

	Bit device			Word device							
	X	Y	M	K	H	KnX	KnY	KnM	T	C	D
S				*	*	*	*	*	*	*	*
D							*	*	*	*	*

Notes on operand usage: none

16-bit command (5 STEP)

MOV	Continuous execution type	MOVP	Pulse execution type

32-bit command (9 STEP)

DMOV	Continuous execution type	DMOVP	Pulse execution type

Flag signal:

Explanation

- (S): Data source. (D): Destination of data movement.
- When this command is executed, the content of (S) will be directly moved to (D). When the command is not executed, the content of (D) will not change.

Example

- When X0=Off, the content of D10 will not change; if X0=On, the value K10 will be sent to data register D10.
- When X1=Off, the content of D10 will not change; if X1=On, the current value of T0 will be sent to data register D10.

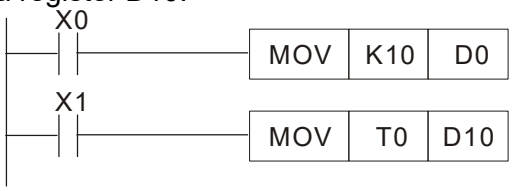

API 13	D	SMOV	P	S m1 m2 D n	Nibble movement

	Bit device			Word device							
	X	Y	M	K	H	KnX	KnY	KnM	T	C	D
S				*	*	*	*	*	*	*	*
D							*	*	*	*	*

Notes on operand usage: none

16-bit command (11 STEP)

MOV	Continuous execution type	SMOVP	Pulse execution type

32-bit command (21 STEP)

DSMOV	Continuous execution type	DSMOV P	Pulse execution type

Flag signal: M1168

Explanation

- S: Data source. m1: The data source transfers starting bit number. m2: The data source transfers individual bit number. D: Transfer destination. n Transferring starting bit number of the destination.
- BCD mode (M1168 = Off):
  SMOV enables and operates BCD under this mode, the operation is similar to the way SMOV operates decimal numbers. The command copies specific bit number of arithmetic element S (S is a 4-figure decimal number), and sends the bit number to arithmetic element D (D is also a 4-figure decimal number). The current data on the target register will be covered.
- m_1 range: 1–4
- m_2 range: 1–m_1 (m_2 cannot be larger than m_1)
- n range: m_2–4 (n cannot be smaller than m_2)

Example 1

- When M1168 = Off (BCD mode), X0 is ON, the instruction transfers two digits of the decimal number starting from the fourth digit of the decimal number (the digit in the thousands place of the decimal number) in D10 to the two digits of the decimal number starting from the third digit of the decimal number (the digit in the hundreds place of the decimal number) in D20. After the instruction is executed, the digits in the thousands place of the decimal number (10^3) and the ones place of the decimal number (10^0) in D20 are unchanged.

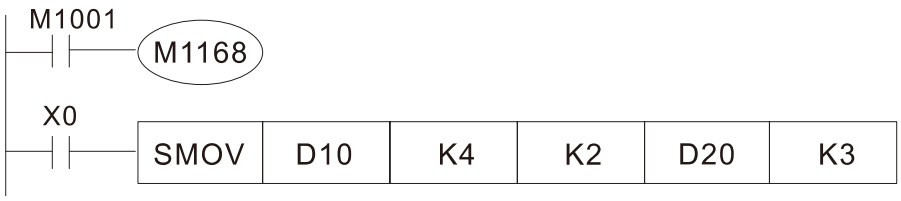

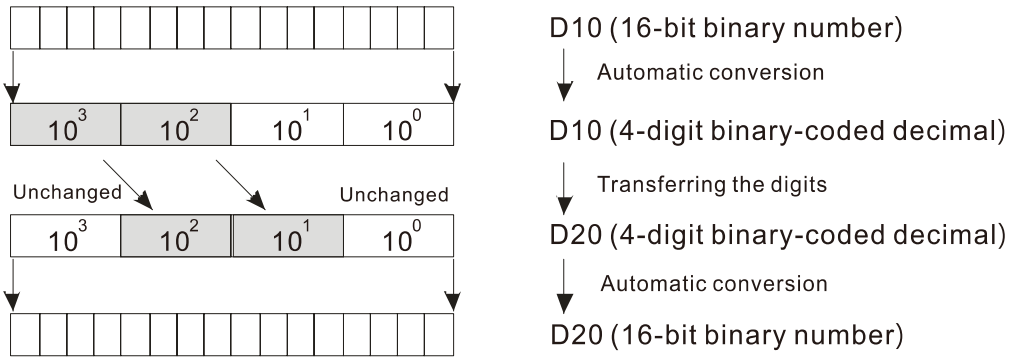

Example 2

■ When M1168 is On (BIN mode), and the SMOV command is executed, D10 and D20 do not change in BCD mode, but send 4 digits as a unit in BIN mode.

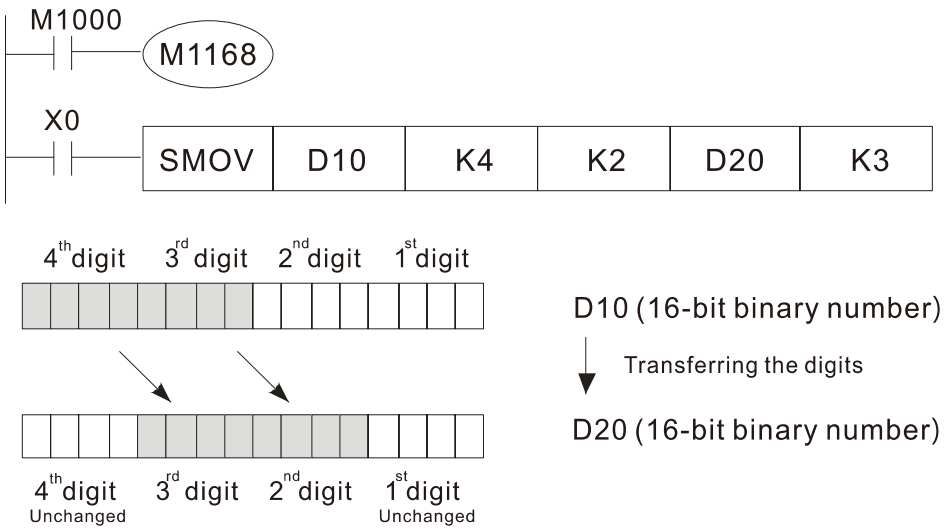

API 15	BMOV	P	S D n	Send all

	Bit device			Word device							
	X	Y	M	K	H	KnX	KnY	KnM	T	C	D
S						*	*	*	*	*	*
D							*	*	*	*	*
n				*	*				*	*	

Notes on operand usage:
n operand scope n ＝ 1 to 512

16-bit command (7 STEP)			
BMOV	Continuous execution type	BMOVP	Pulse execution type
32-bit command			
—	—	—	—

Flag signal: none

Explanation

- S: Initiate source device. D: Initiate destination device. n: Send block length.
- The content of n registers starting from the initial number of the device designated by S will be sent to the n registers starting from the initial number of the device designated by n; if the number of points referred to by n exceeds the range used by that device, only points within the valid range will be sent.

Example 1

- When X10=On, the content of registers D0–D3 will be sent to the four registers D20 to D23.

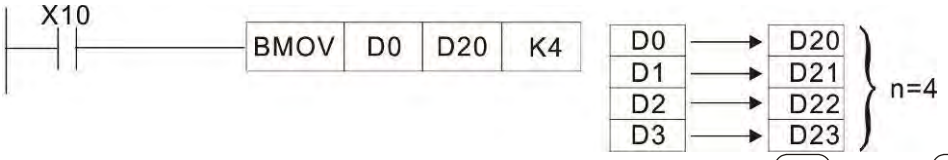

Example 2

- If the designated bit devices KnX, KnY, and KnM are sent, S and D must have the same number of nibbles, which implies that n must be identical.

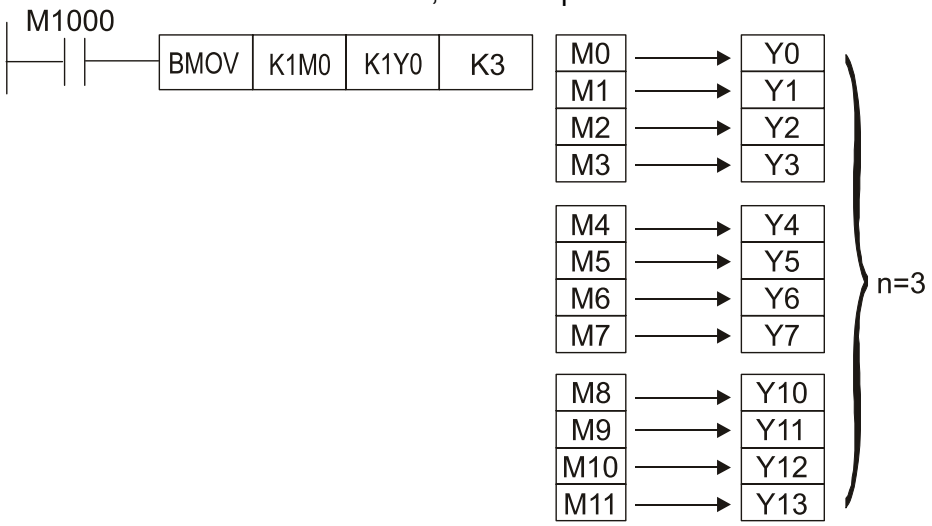

Example 3

- In order to prevent overlap between the transmission addresses of two operands, which would cause confusion, make sure that the addresses designated by the two operands have different sizes, as shown below:

When S > D, send in the order ①→② →③.

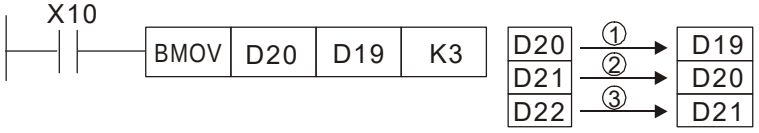

When S < D, send in the order ③→② →①.

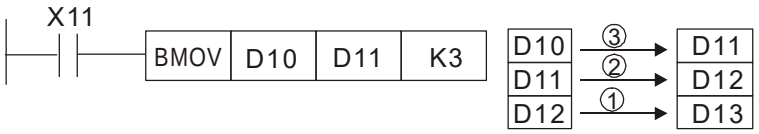

API 18	D	BCD	P	(S) (D)	BIN to BCD transformation

	Bit device			Word device							
	X	Y	M	K	H	KnX	KnY	KnM	T	C	D
S						*	*	*	*	*	*
D							*	*	*	*	*

Notes on operand usage: none

16-bit command (5 STEP)

BCD	Continuous execution type	BCDP	Pulse execution type

32-bit command (9 STEP)

DBCD	Continuous execution type	DBCDP	Pulse execution type

Flag signal: none

Explanation

- (S): Data source. (D): Destination of data movement.
- The content of data source (S) (BIN value, 0–9999) executes BCD transformation and saves in (D).
- Arithmetic elements S and D use the F device, it can only use 16-bit command.

Example

- When X0 is ON, and the BIN value of D10 is transformed to BCD value, the digit is saved in 4-bit element of K1Y0 (Y0–Y3).

- If D10 = 001E (Hex) = 0030 (Decimal), the executed result will be Y0–Y3=0000 (BIN).

API 19	D	BIN	P	S D	BCD to BIN transformation

	Bit device			Word device							
	X	Y	M	K	H	KnX	KnY	KnM	T	C	D
S						*	*	*	*	*	*
D							*	*	*	*	*

Notes on operand usage: none

16-bit command (5 STEP)

BIN	Continuous execution type	BINP	Pulse execution type

32-bit command (9 STEP)

DBIN	Continuous execution type	DBINP	Pulse execution type

Flag signal: none

Explanation

- S: Data source. D: Transformation result.
- The content of data source S (BCD: 0–9,999) executes BIN transformation and saves in D.
- Valid number range of the data source S: BCD (0–9,999), DBCD (0–99,999,999).

Example

- When X0 is ON, and the BCD value of K1X20 is transformed to BIN value, the result saves in D10.

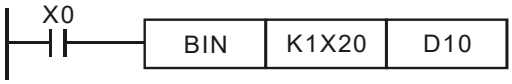

Remark

- When PLC reads a BCD type switch-off from the outside, it has to use the BIN command to transform the read data to BIN value, then saves the value into PLC.

API 20	D	ADD	P	(S1) (S2) (D)	BIN addition

	Bit device			Word device							
	X	Y	M	K	H	KnX	KnY	KnM	T	C	D
S1				*	*	*	*	*	*	*	*
S2				*	*	*	*	*	*	*	*
D							*	*	*	*	*

Notes on operand usage: none

16-bit command (7 STEP)

ADD	Continuous execution type	ADDP	Pulse execution type

32-bit command (13 STEP)

DADD	Continuous execution type	DADDP	Pulse execution type

Flag signal: M1020 Zero flag
M1021 Borrow flag
M1022 Carry flag
Please refer to the following supplementary explanation

Explanation

- (S1): Augend. (S2): Addend. (D): Sum.
- Using two data sources: The result of adding (S1) and (S2) using the BIN method will be stored in (D).
- The highest bit of any data is symbolized as bit 0 indicating (positive) 1 indicating (negative), enabling the use of algebraic addition operations. (for instance: 3+(-9)=-6)
- Flag changes connected with the addition.

1. When calculation results are 0, the zero flag M1020 will be On.
2. When calculation results are less than –32,768, the borrow flag M1021 will be On.
3. When calculation results are greater than 32,767, the carry flag M1022 will be On.

Example

- 16-bit BIN addition: When X0=On, the result of the content of addend D0 plus the content of augend D10 will exist in the content of D20.

Remark

- Relationship between flag actions and negative/positive numbers:

16-bit:

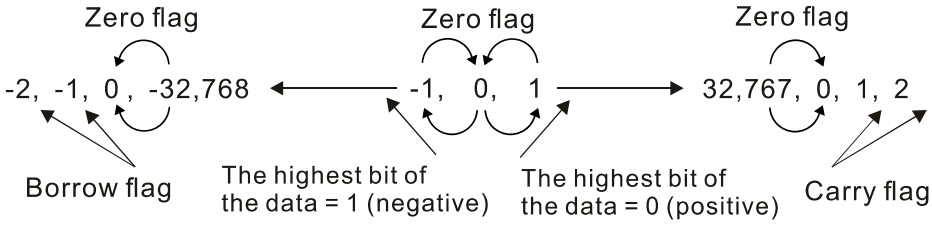

32-bit:

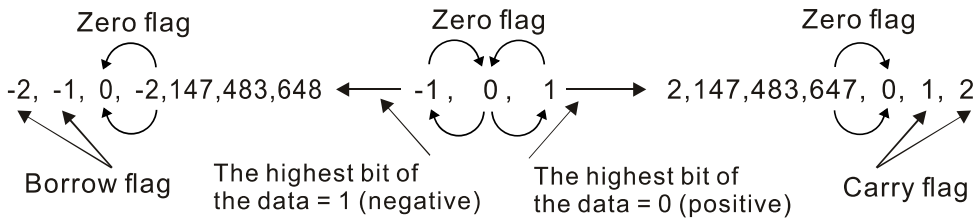

API 21	D	SUB	P	(S1) (S2) (D)	BIN subtraction

	Bit device			Word device							
	X	Y	M	K	H	KnX	KnY	KnM	T	C	D
S1				*	*	*	*	*	*	*	*
S2				*	*	*	*	*	*	*	*
D							*	*	*	*	*

Notes on operand usage: none

16-bit command (7 STEP)

SUB	Continuous execution type	SUBP	Pulse execution type

32-bit command (13 STEP)

DSUB	Continuous execution type	DSUBP	Pulse execution type

Flag signal: M1020 Zero flag
M1021 Borrow flag
M1022 Carry flag
Please refer to the following supplementary explanation

Explanation

- (S1): Minuend. (S2): Subtrahend. (D): Difference.
- Using two data sources: The result of subtraction of (S1) and (S2) using the BIN method is stored in (D).
- The highest bit of any data is symbolized as bit 0 indicating (positive) 1 indicating (negative), enabling the use of algebraic subtraction operations.
- Flag changes connected with subtraction.

1. When calculation results are 0, the zero flag M1020 will be On.
2. When calculation results are less than –32,768, the borrow flag M1021 will be On.
3. When calculation results are greater than 32,767, the carry flag M1022 will be On.

Example

- 16-bit BIN subtraction: When X0=On, the content of D10 is subtracted from the content of D0, and the difference is stored in D20.

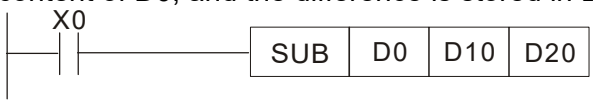

API 22	D	MUL	P	(S1) (S2) (D)	BIN multiplication

	Bit device			Word device							
	X	Y	M	K	H	KnX	KnY	KnM	T	C	D
S1				*	*	*	*	*	*	*	*
S2				*	*	*	*	*	*	*	*
D							*	*	*	*	*

Notes on operand usage:
The 16-bit command operand D will occupy 2 consecutive points

16-bit command (7 STEP)

MUL	Continuous execution type	MULP	Pulse execution type

32-bit command (13 STEP)

DMUL	Continuous execution type	DMULP	Pulse execution type

Flag signal: none

Explanation

- (S1): Multiplicand. (S2): Multiplier. (D): Product.
- Using two data sources: When (S1) and (S2) are multiplied using the BIN method, the product is stored in (D).

16-bit BIN multiplication operation:

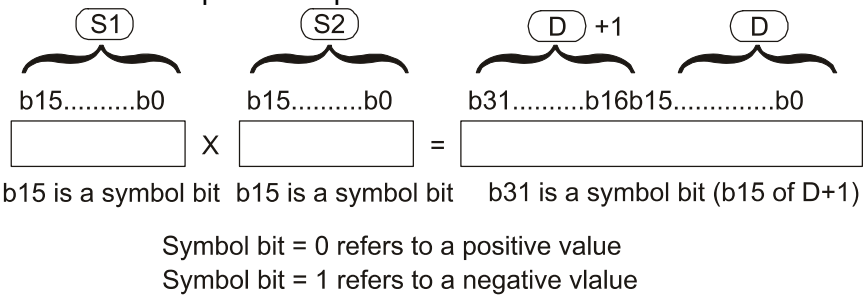

Symbol bit = 0 refers to a positive value
Symbol bit = 1 refers to a negative vlalue

When (D) is a bit device, K1–K4 can be designated as a hexadecimal number, which will occupy 2 consecutive units.

Example

- When 16-bit DO is multiplied by 16-bit D10, the result will be a 32-bit product; the upper 16 bits will be stored in D21, and the lower 16 bits will be stored in D20. Whether the bit at the farthest left is Off or On will indicate the sign of the result.

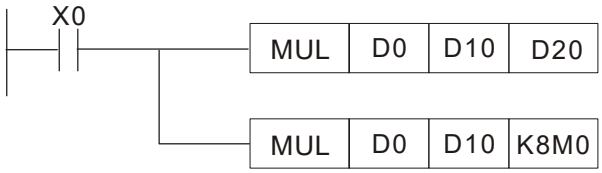

API 23	D	DIV	P	S1 S2 D	BIN division

	Bit device			Word device							
	X	Y	M	K	H	KnX	KnY	KnM	T	C	D
S1				*	*	*	*	*	*	*	*
S2				*	*	*	*	*	*	*	*
D							*	*	*	*	*

Notes on operand usage:
The 16-bit command operand D will occupy 2 consecutive points

16-bit command (7 STEP)

DIV	Continuous execution type	DIVP	Pulse execution type

32-bit command (13 STEP)

DDIV	Continuous execution type	DDIVP	Pulse execution type

Flag signal: none

Explanation

- S1: Dividend. S2: Divisor. D: Quotient and remainder.
- Using two data sources: The quotient and remainder will be stored in D when S1 and S2 are subjected to division using the BIN method. The sign bit for S1, S2 and D must be kept in mind when performing a 16-bit operation.

16-bit BIN division:

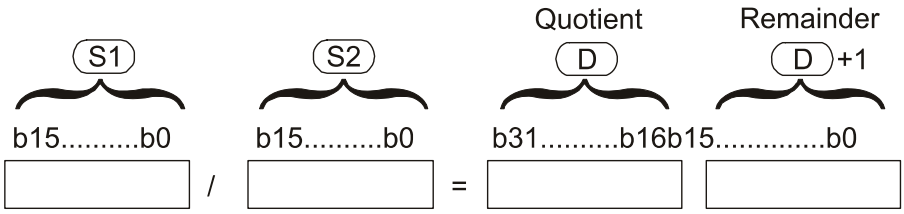

If D is a bit device, K1–K4 can be designated 16 bits, which will occupy 2 consecutive units and yield the quotient and remainder.

Example

- When X0=On, the quotient resulting from division of dividend D0 by divisor D10 will be placed in D20, and the remainder will be placed in D21. Whether the highest bit is Off or On will indicate the sign of the result.

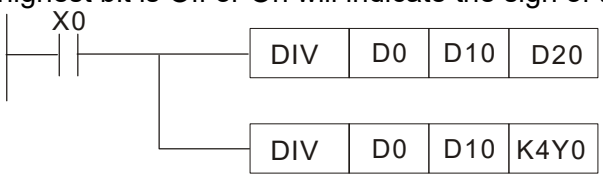

API 24	D	INC	P	(D)	BIN add one

	Bit device			Word device							
	X	Y	M	K	H	KnX	KnY	KnM	T	C	D
D							*	*	*	*	*

Notes on operand usage: none

16-bit command (3 STEP)

INC	Continuous execution type	INCP	Pulse execution type

32-bit command (5 STEP)

DINC	Continuous execution type	DINCP	Pulse execution type

Flag signal: none

Explanation

- (D): Destination device.
- If a command is not the pulse execution type, when the command is executed, the program will add 1 to the content of device (D) for each scanning cycle.
- This command is ordinarily used as a pulse execution type command (INCP).
- During 16-bit operation, 32,767 +1 will change the value to -32,768. During 32 bit operation, 2,147,483,647 +1 will change the value to -2,147,483,648.

Example

- When X0=Off→On, 1 is automatically added to the content of D0.

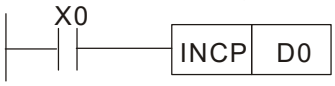

API 25	D	DEC	P	(D)	BIN subtract one

	Bit device			Word device							
	X	Y	M	K	H	KnX	KnY	KnM	T	C	D
D				*	*	*	*	*			

Notes on operand usage: none

16-bit command (3 STEP)

DEC	Continuous execution type	DECP	Pulse execution type

32-bit command (5 STEP)

DDEC	Continuous execution type	DDECP	Pulse execution type

Flag signal: none

Explanation

- (D): Destination device.
- If a command is not the pulse execution type, when the command is executed, the program will add 1 to the content of device (D) for each scanning cycle.
- This command is ordinarily used as a pulse execution type command (DECP).
- During 16-bit operation, -32,768 minus 1 will change the value to 32,767. During 32 bit operation, -2,147,483,648 minus 1 will change the value to -2,147,483,647.

Example

- When X0=Off→On, 1 is automatically subtracted from the content of D0.

API 30	D	ROR	P	(D) (n)	Right rotation

	Bit device			Word device							
	X	Y	M	K	H	KnX	KnY	KnM	T	C	D
D							*	*	*	*	*
n				*	*						

Notes on operand usage:
Only K4 (16-bit) will be valid if the operand D is designated as KnY or KnM.
n operand n=K1-K16 (16-bit)

16-bit command (5 STEP)

ROR	Continuous execution type	RORP	Pulse execution type

32-bit command (9 STEP)

DROR	Continuous execution type	DRORP	Pulse execution type

Flag signal: M1022 Carry flag

Explanation

- (D): Device to be rotated. (n): Number of bits for one rotation.
- Rotates the device designated by (D) to the right (n) bits.
- This command is ordinarily used as a pulse execution type command (RORP).

Example

- When X0=Off→On, 4 of the 16 bits in D10 specify a right rotation; the content of the bit indicated with * (see figure below) will be sent to the carry flag signal M1022.

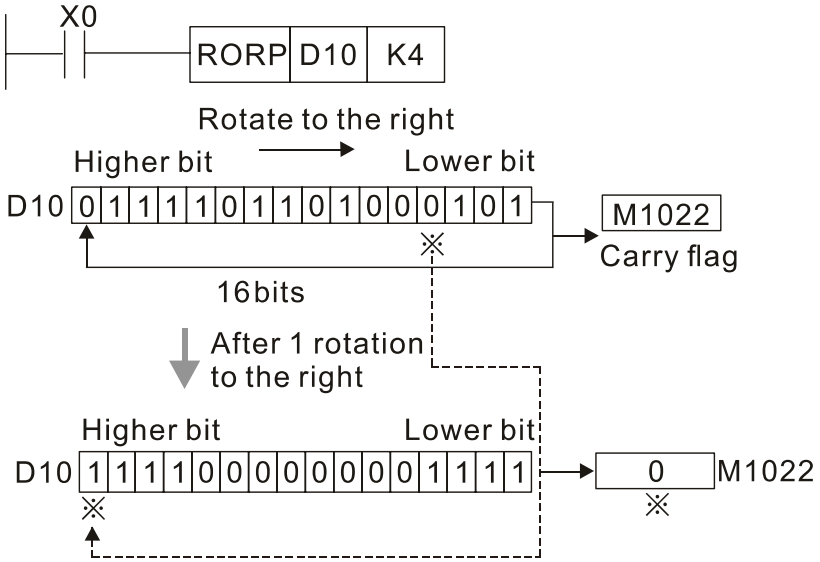

API 31	D	ROL	P	(D) (n)	Left rotation

	Bit device			Word device							
	X	Y	M	K	H	KnX	KnY	KnM	T	C	D
D							*	*	*	*	*
n				*	*						

Notes on operand usage:
Only K4 (16-bit) will be valid if the operand D is designated as KnY or KnM.
n operand n=1 to 16 (16-bit)

16-bit command (5 STEP)

ROL	Continuous execution type	ROLP	Pulse execution type

32-bit command (9 STEP)

DROL	Continuous execution type	DROLP	Pulse execution type

Flag signal: M1022 Carry flag

Explanation

- (D): Device to be rotated. (n): Number of bits for one rotation.
- Rotates the device designated by (D) to the left (n) bits.
- This command is ordinarily used as a pulse execution type command (ROLP).

Example

- When X0=Off→On, 4 of the 16 bits in D10 specify a left rotation; the content of the bit indicated with * (see figure below) will be sent to the carry flag signal M1022.

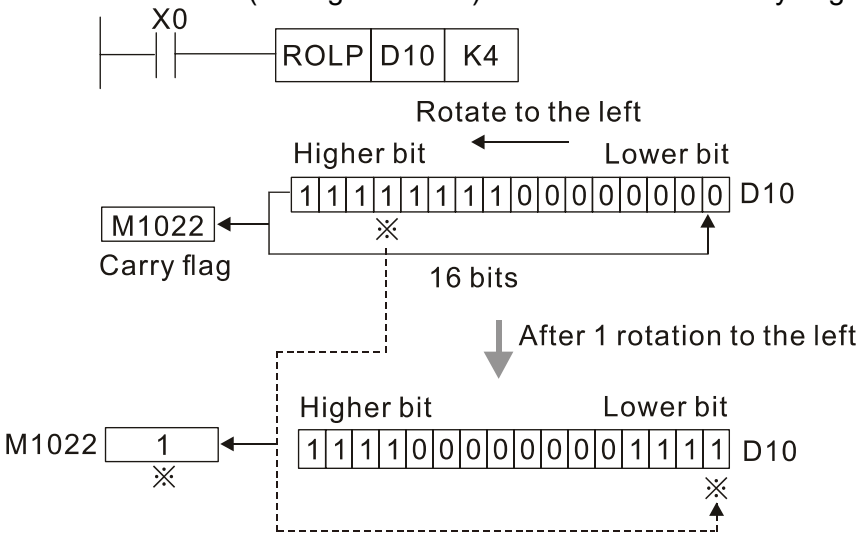

API 40		ZRST	P	(D1) (D2)	Clear range

	Bit device			Word device							
	X	Y	M	K	H	KnX	KnY	KnM	T	C	D
D1		*	*						*	*	*
D2		*	*						*	*	*

Notes on operand usage:
Number of operand D_1 operand ≤ number of operand D_2
Operands D_1, D_2 must designate the same type of device
Please refer to the function specifications table for each device in series for the scope of device usage

16-bit command (5 STEP)			
ZRST	Continuous execution type	ZRSTP	Pulse execution type
32-bit command			
—	—	—	—

Flag signal: none

Explanation

- **D_1**: Clear range's initial device. **D_2**: Clear range's final device.
- When the number of operand D_1 > number of operand D_2, only the operand designated by D_2 will be cleared.

Example

- When X0 is On, auxiliary relays M300–M399 will be cleared and changed to Off.
- When X1 is On, 16-bit counters C0–C127 will all be cleared. (Writes 0, and clears and changes contact and coil to Off).
- When X10 is On, timer T0–T127 will all be cleared. (Writes 0, and clears and changes contact and coil to Off).
- When X3 is On, the data in data registers D0–D100 will be cleared and set as 0.

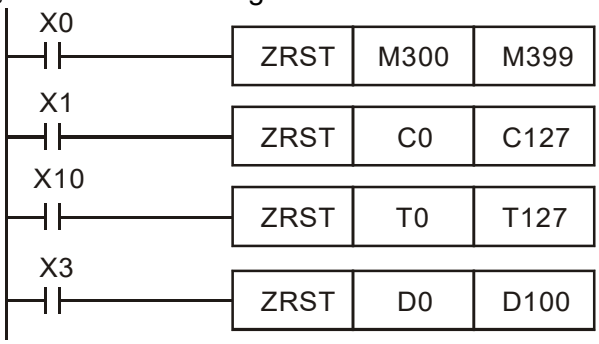

Remark

- Devices can independently use the clear command (RST), such as bit device Y, M and word device T, C, D.

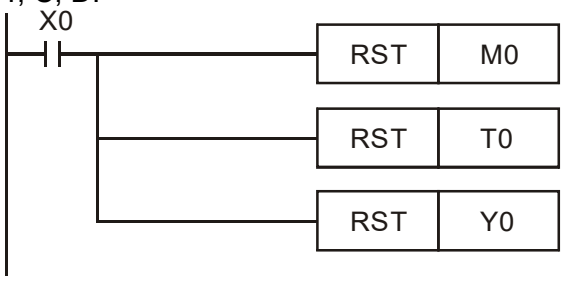

API 41	D	DECO	P	S D n	Decoder

	Bit device			Word device							
	X	Y	M	K	H	KnX	KnY	KnM	T	C	D
S	*	*	*	*	*				*	*	*
D		*	*				*	*	*	*	*
n				*	*						

Notes on operand usage: none

16-bit command (7 STEP)			
DECO	Continuous execution type	DECOP	Pulse execution type

32-bit command (13 STEP)			
DDECO	Continuous execution type	DDECOP	Pulse execution type

Flag signal: none

Explanation

- S: Decoding source device. D: Device that saves the decoding result. n: Length of decoding bit.
- Decodes with the lower "n" bit, and saves the length of "2^n" bit in D.
- This command usually uses pulse execution type command (DECOP).
- When D is the bit device, n = 1–8, when D is the word device, n = 1–4.

Example 1

- When Dis the bit device, the valid range of n is 0< **n** ≦8. If n = 0 or n > 8, a fault will occur.
- When n = 8, the maximum decoding will be 2^8 = 256 points.
- When M200 switches from Off to On, the content of X0–X2 is decoded to M100–M107.
- If S = 3, M103 (the third digit starting from M100) = On.
- When the command is executed, M200 turns to Off. The ones that are decoded and outputted act as usual.

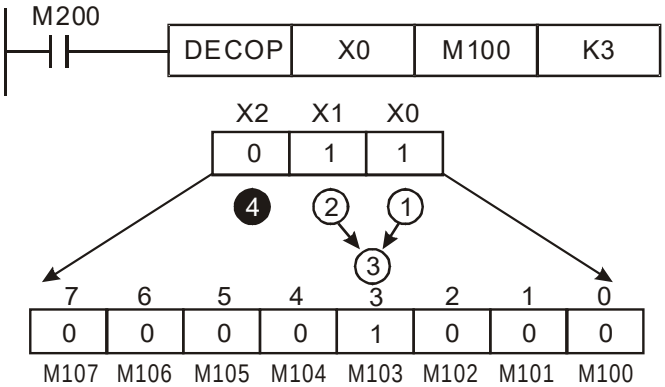

Example 2

- When D is word device, the valid range of n is 0< **n** ≦4. If n = 0 or n > 4, the fault occurs.
- When n = 4, the maximum decoding will be 2^4 = 16 points.
- When M200 switches from Off to On, the content of D10 (b2–b0) is decoded to D20 (b7–b0). The unused digits (b15–b8) of D20 become 0.
- The lower 3 digits of D10 are decoded and saved in the lower 8 digits of D20, the upper 8 digits are 0.
- When the command is executed, M200 turns to Off. The ones that are decoded and outputted act as usual.

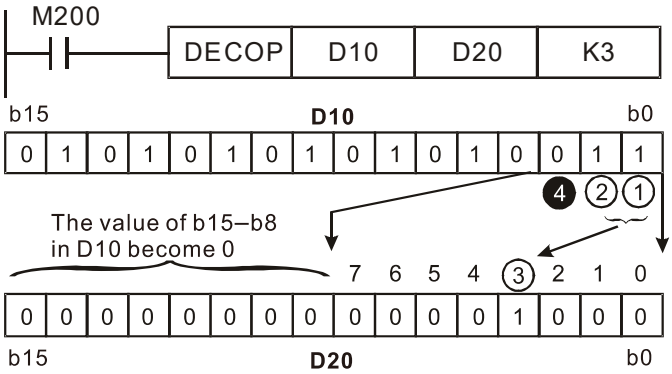

API 42	D	ENCO	P	S D n	Encoder

	Bit device			Word device							
	X	Y	M	K	H	KnX	KnY	KnM	T	C	D
S	*	*	*						*	*	*
D							*	*	*	*	*
n				*	*						

Notes on operand usage: none

16-bit command (7 STEP)

ENCO	Continuous execution type	ENCOP	Pulse execution type

32-bit command (13 STEP)

DENCO	Continuous execution type	DENCOP	Pulse execution type

Flag signal: none

Explanation

- S: Encoding source device. D: Device that saves the encoding result. n: Length of encoding bit.
- Encodes the data of lower "2^n" bit length from encoding source device S, and saves the encoding result in D.
- If multiple digits of encoding source device are 1, the command will process the first digit starting from high digit.
- This command usually uses pulse execution type command (ENCOP).
- When S is the bit device, n = 1–8, when S is the word device, n = 1–4.

Example 1

- When S is the bit device, the valid range of n is 0< **n** ≦8. If n = 0 or n > 8, a fault will occur.
- When n = 8, the maximum decoding will be 2^8 = 256 points.
- When X0 switches from Off to On, the content of 2^3 digit (M0–M7) is encoded and saved in the lower 3 digits (b2–b0). The unused digits (b15–b3) in D0 become 0.
- When the command is executed, X0 turns to Off. The data in D is unchanged.

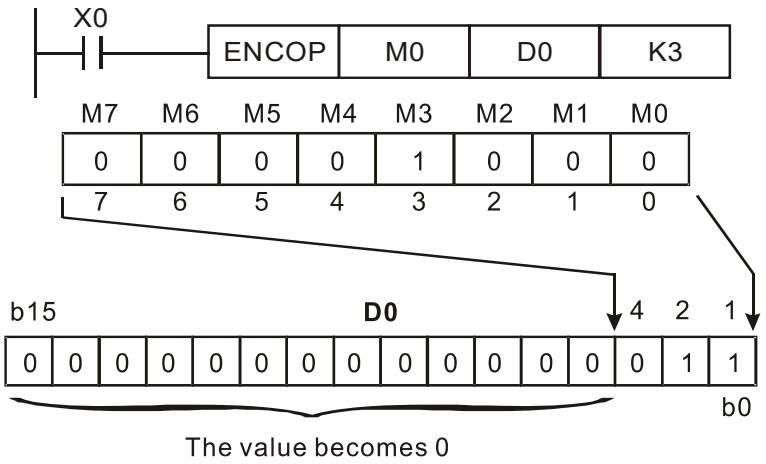

Example 2

- When S is word device, the valid range of n is 0< **n** ≦4. If n = 0 or n > 4, the fault occurs.
- When n = 4, the maximum decoding will be 2^4 = 16 points.
- When X0 switches from Off to On, 2^3 digit data of D10 (b0–b7) is encoded and saved in the lower 3 digits (b2–b0) of D20. The unused digits (b15–b3) of D20 become 0. (b8–b15 in D10 are invalid data)
- When the command is executed, X0 turns to Off. The data in D is unchanged.

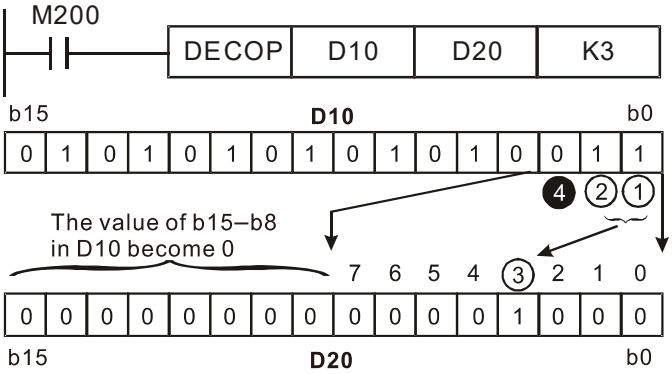

API 43	D	SUM	P	(S) (D)	ON bit number

	Bit device			Word device							
	X	Y	M	K	H	KnX	KnY	KnM	T	C	D
S				*	*	*	*	*	*	*	*
D									*	*	*

Notes on operand usage: none

16-bit command (5 STEP)

SUM	Continuous execution type	SUMP	Pulse execution type

32-bit command (9 STEP)

DSUM	Continuous execution type	DSUMP	Pulse execution type

Flag signal: M1020

Explanation

- (S): Source device. (D): Destination of saving counter values.
- The total amount of all digits that is “1” in S will be saved in D.
- D will use 2 registers when use the 32-bit command.
- Arithmetic elements S and D use F device, and can only use 16-bit command.
- If there is no bit is ON, the flag signal M1020 will be ON.

Example

- When M200 = On, the total amount of content “1” digit in D0’s 16-bit command will be saved in D2.

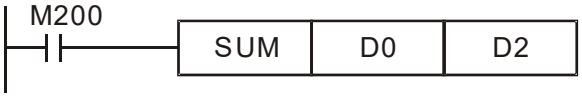

0	0	0	1	0	0	1	0	0	0	0	0	0	1	0	0

D0

3

D2

API 44	D	BON	P	S D n	ON bit judgement

	Bit device			Word device							
	X	Y	M	K	H	KnX	KnY	KnM	T	C	D
S				*	*	*	*	*	*	*	*
D		*	*						*	*	*
n				*	*						

Notes on operand usage: none

16-bit command (7 STEP)

BON	Continuous execution type	BONP	Pulse execution type

32-bit command (9 STEP)

DBON	Continuous execution type	DBONP	Pulse execution type

Flag signal: none

Explanation

- S: Source device. D: Destination of saving judging result. n: assign judged digit (numbering from 0)
- The status of specific digit from source device is shown on target position.
- Arithmetic element S uses F device, and can only use the 16-bit command.
- The valid range of arithmetic element n: n = 0–15 (16-bit), n = 0–31 (32-bit).

Example

- When X0 = On, if the 15th digit of D0 is “1”, M0 is On. If it is “0”, M0 is Off.
- When X0 turns to Off, M0 remains previous status.

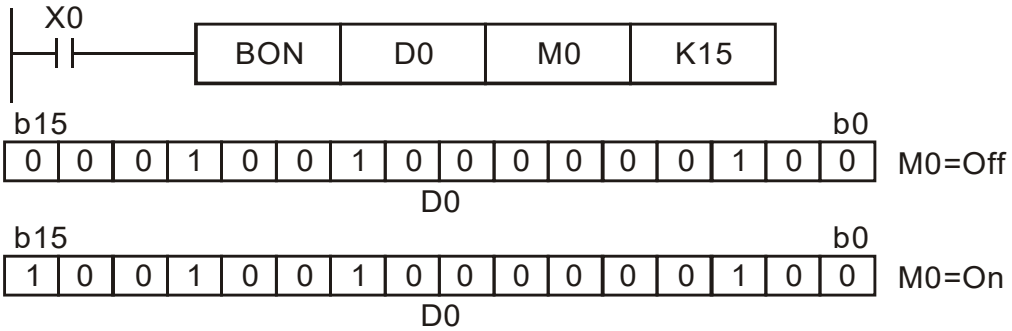

API 49	D	FLT	P	(S) (D)	BIN whole number → binary decimal transformation

	Bit device			Word device							
	X	Y	M	K	H	KnX	KnY	KnM	T	C	D
S		*	*						*	*	*
D		*	*						*	*	*

Notes on operand usage: Please refer to the function specifications table for each device in series for the scope of device usage
The operand D will occupy 2 consecutive points

16-bit command (5 STEP)

FLT	Continuous execution type	FLTP	Pulse execution type

32-bit command (9 STEP)

DFLT	Continuous execution type	DFLTP	Pulse execution type

Flag signal: none

Explanation

- **S**: Transformation source device. **D**: Device storing transformation results.
- Transforms BIN whole number into a binary decimal value.

Example

- When M200 is On, converts the whole number of values corresponding to D0 and D1 into floating point numbers, which are placed in D20 and D21.

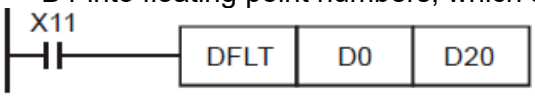

API 110	D	ECMP	P	S_1 S_2 D	Comparison of binary floating point numbers

	Bit device			Word device							
	X	Y	M	K	H	KnX	KnY	KnM	T	C	D
S1				*	*						*
S2				*	*						*
D				*	*						*

Notes on operand usage:
The operand D occupies three consecutive points
Please refer to the function specifications table for each device in series for the scope of device usage

16-bit command

—	—	—	—

32-bit command (13 STEP)

DECMP	Continuous execution type	DECMP P	Pulse execution type

Flag signal: none

Explanation

- **S_1**: Comparison of binary floating point numbers value 1. **S_2**: Comparison of binary floating point numbers value 2. **D**: Results of comparison, occupies 3 consecutive points.
- When binary floating point number 1 is compared with comparative binary floating point number 2, the result of comparison (>, =, <) will be expressed in **D**.
- **If the source operand S_1** or **S_2** designates a constant K or H, the command will transform the constant to a binary floating-point number for the purpose of comparison.

Example

- When the designated device is M10, it will automatically occupy M10–M12.
- When X0=On, the DECMP command executes, and one of M10–M12 will be On. When X0=Off, the DECMP command will not execute, and M10–M12 will remain in the X0=Off state.
- If results in the form of ≥, ≤, or ≠ are needed, they can be obtained by series and parallel connection of M10–M12.
- Please use the RST or ZRST command to clear the result.

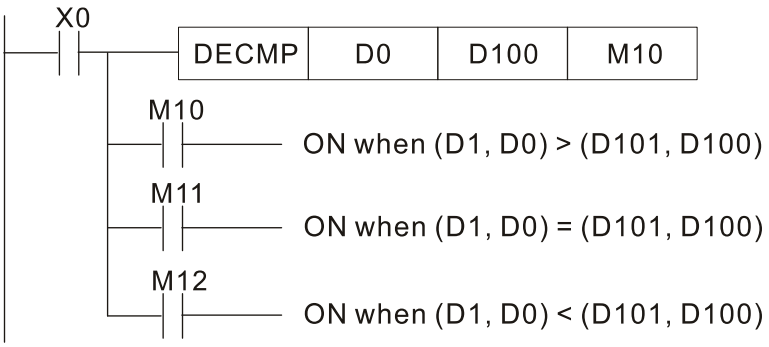

API 111	D	EZCP	P	S1 S2 S D	Comparison of binary floating point number range

	Bit device			Word device							
	X	Y	M	K	H	KnX	KnY	KnM	T	C	D
S1				*	*						*
S2				*	*						*
S				*	*						*
D		*	*								

Notes on operand usage:
The operand D occupies three consecutive points
Please refer to the function specifications table for each device in series for the scope of device usage

16-bit command

—	—	—	—

32-bit command (17 STEP)

DEZCP	Continuous execution type	DEZCP P	Pulse execution type

Flag signal: none

Explanation

- **S_1**: Lower limit of binary floating point number in range comparison. **S_2**: Upper limit of binary floating point number in range comparison. **S**: Comparison of binary floating point numerical values. **D**: Results of comparison, occupies 3 consecutive points.
- Comparison of binary floating point numerical value **S** with binary floating point number lower limit value **S_1** and binary floating point number upper limit value **S_2**; the results of comparison are expressed in **D**.
- **If the source operand S_1** or **S_2** designates a constant K or H, the command will transform the constant to a binary floating-point number for the purpose of comparison.
- When the lower limit binary floating point number **S_1** is greater than the upper limit binary floating point number **S_2**, a command will be issued to perform comparison with the upper and lower limits using the binary floating point number lower limit value **S_1**.

Example

- When the designated device is M0, it will automatically occupy M0–M2.
- When X0=On, the DEZCP command will be executed, and one of M0–M2 will be On. When X0=Off, the EZCP command will not execute, and M0–M2 will continue in the X0=Off state.
- Please use the RST or ZRST command to clear the result.

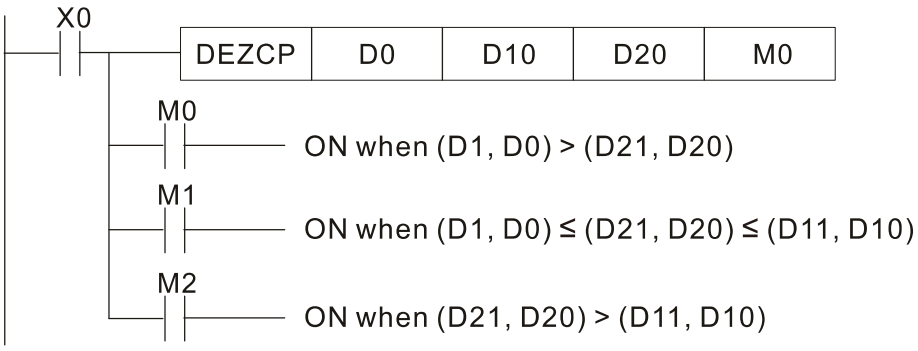

API 116	D	RAD	P	S D	Angle → Diameter

	Bit device			Word device							
	X	Y	M	K	H	KnX	KnY	KnM	T	C	D
S				*	*						*
D											*

Notes on operand usage:
Please refer to the function specifications table for each device in series for the scope of device usage

16-bit command

—	—	—	—

32-bit command (9 STEP)

DRAD	Continuous execution type	DRADP	Pulse execution type

Flag signal: none

Explanation

- **S**: data source (angle). **D**: result of transformation (diameter).
- Uses the following formula to convert angles to radians.
- Diameter ＝Angle × (π/180)

Example

- When X0=On, the angle of the designated binary floating point number (D1, D0) will be converted to radians and stored in (D11, D10), with the content consisting of a binary floating point number.

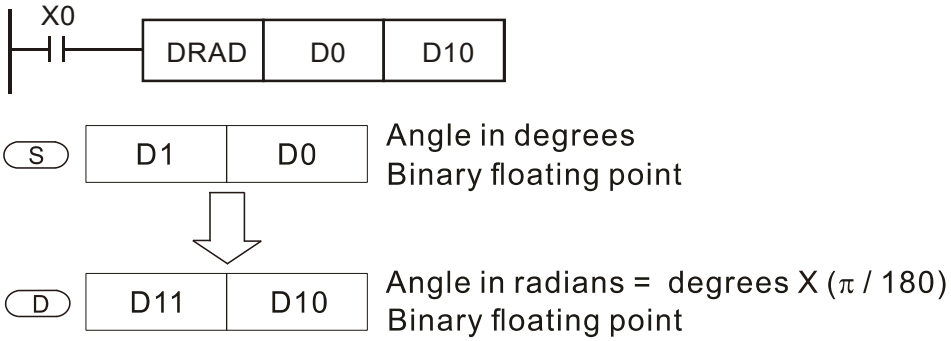

API 117	D	DEG	P	(S) (D)	Diameter → angle

	Bit device			Word device							
	X	Y	M	K	H	KnX	KnY	KnM	T	C	D
S				*	*						*
D											*

Notes on operand usage:
Please refer to the function specifications table for each device in series for the scope of device usage

16-bit command

—	—	—	—

32-bit command (9 STEP)

DDEG	Continuous execution type	DDEGP	Pulse execution type

Flag signal: none

Explanation

- **S**: data source (diameter). **D**: results of transformation (angle).
- Uses the following formula to convert radians to an angle.
- Angle ＝Diameter × (180/π)

Example

- When X0=On, angle of the designated binary floating point number (D1, D0) in radians will be converted to an angle and stored in (D11, D10), with the content consisting of a binary floating point number.

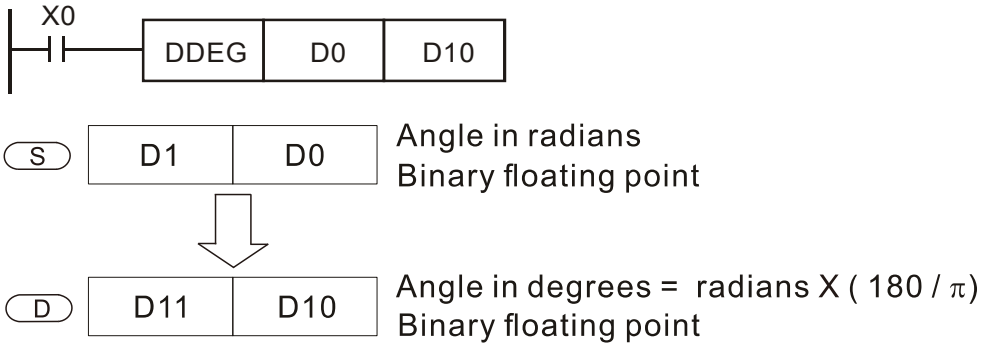

API 120	D	EADD	P	S1 S2 D	Adding binary floating point numbers

	Bit device			Word device							
	X	Y	M	K	H	KnX	KnY	KnM	T	C	D
S1				*	*						*
S2				*	*						*
D											*

Notes on operand usage:
Please refer to the function specifications table for each device in series for the scope of device usage

16-bit command			
—	—	—	—

32-bit command (9 STEP)			
DEADD	Continuous execution type	DEADDP	Pulse execution type

Flag signal: none

Explanation

- **S_1**: addend. **S_2**: augend. **D**: sum.
- When the content of the register designated by **S_2** is added to the content of the register designated by **S_1**, and the result is stored in the register designated by **D**. Addition is performed entirely using binary floating-point numbers.
- **If the source operand S_1** or **S_2** designates a constant K or H, the command will transform that constant into a binary floating point number for use in addition.
- **In the situation when S_1** and **S_2** designate identical register numbers, if a "continuous execution" command is employed, when conditional contact is On, the register will perform addition once during each scan. Pulse execution type commands (DEADDP) are generally used under ordinary circumstances.

Example

- When X0=On, a binary floating point number (D1, D0) will be added to a binary floating point number (D3, D2), and the results stored in (D11, D10).

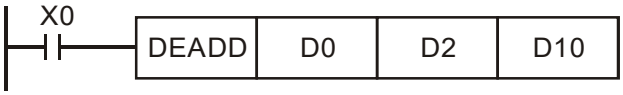

- When X2 =On, a binary floating point number (D11, D10) will be added to K1234 (which has been automatically converted to a binary floating-point number), and the results stored in (D21, D20).

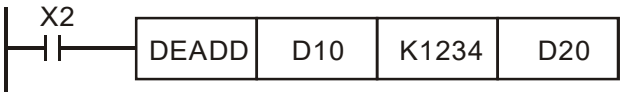

API 121	D	ESUB	P	S1 S2 D	Subtraction of binary floating point numbers

	Bit device			Word device							
	X	Y	M	K	H	KnX	KnY	KnM	T	C	D
S1				*	*						*
S2				*	*						*
D											*

Notes on operand usage:
Please refer to the function specifications table for each device in series for the scope of device usage

16-bit command			
—	—	—	—

32-bit command (13 STEP)			
DESUB	Continuous execution type	DESUBP	Pulse execution type

Flag signal: none

Explanation

- **S_1**: minuend. **S_2**: subtrahend. **D**: difference.
- When the content of the register designated by **S_2** is subtracted from the content of the register designated by **S_1**, the difference will be stored in the register designated by **D**; subtraction is performed entirely using binary floating-point numbers.
- **If the source operand S_1** or **S_2** designates a constant K or H, the command will transform that constant into a binary floating point number for use in subtraction.
- **In the situation when S_1** and **S_2** designate identical register numbers, if a "continuous execution" command is employed, when conditional contact is On, the register will perform addition once during each scan. Pulse execution type commands (DESUBP) are generally used under ordinary circumstances.

Example

- When X0=On, a binary floating point number (D1, D0) will be subtracted to a binary floating point number (D3, D2), and the results stored in (D11, D10).

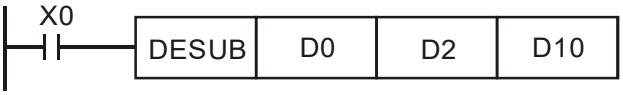

- When X2 =On, the binary floating point number (D1, D0) will be subtracted from K1234 (which has been automatically converted to a binary floating-point number), and the results stored in (D11, D10).

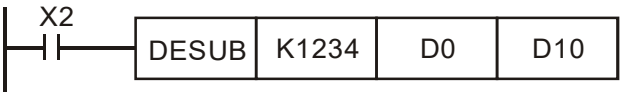

API 122	D	EMUL	P	S1 S2 D	Multiplication of binary floating point numbers

	Bit device			Word device							
	X	Y	M	K	H	KnX	KnY	KnM	T	C	D
S1				*	*						*
S2				*	*						*
D											*

Notes on operand usage:
Please refer to the function specifications table for each device in series for the scope of device usage

16-bit command			
—	—	—	—

32-bit command (13 STEP)			
DEMUL	Continuous execution type	DEMULP	Pulse execution type

Flag signal: none

Explanation

- **S_1**: multiplicand. **S_2**: multiplier. **D**: product.
- When the content of the register designated by **S_1** is multiplied by the content of the register designated by **S_2**, the product will be stored in the register designated by **D**; multiplication is performed entirely using binary floating-point numbers.
- **If the source operand S_1** or **S_2** designates a constant K or H, the command will transform that constant into a binary floating point number for use in multiplication.
- **In the situation when S_1** and **S_2** designate identical register numbers, if a "continuous execution" command is employed, when conditional contact is On, the register will perform multiplication once during each scan. Pulse execution type commands (DEMULP) are generally used under ordinary circumstances.

Example

- When X1=On, the binary floating point number (D1, D0) will be multiplied by the binary floating point number (D11, D10), and the product will be stored in the register designated by (D21, D20).

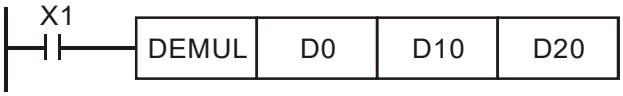

- When X2 =On, the binary floating point number (D1, D0) will be multiplied from K1234 (which has been automatically converted to a binary floating-point number), and the results stored in (D11, D10).

API 123	D	EDIV	P	S1 S2 D	Division of binary floating point numbers

	Bit device			Word device							
	X	Y	M	K	H	KnX	KnY	KnM	T	C	D
S1				*	*						*
S2				*	*						*
D											*

Notes on operand usage:
Please refer to the function specifications table for each device in series for the scope of device usage

16-bit command			
—	—	—	—

32-bit command (13 STEP)			
DEDIV	Continuous execution type	DEDIVP	Pulse execution type

Flag signal: none

Explanation

- **S_1**: dividend. **S_2**: divisor. **D**: quotient and remainder.
- When the content of the register designated by **S_1** is divided by the content of the register designated by **S_2**, the quotient will be stored in the register designated by **D**; division is performed entirely using binary floating-point numbers.
- **If the source operand S_1** or **S_2** designates a constant K or H, the command will transform that constant into a binary floating point number for use in division.

Example

- When X1=On, the binary floating point number (D1, D0) will be divided by the binary floating point number (D11, D10), and the quotient stored in the register designated by (D21, D20).

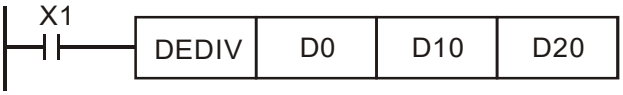

- When X2=On, the binary floating point number (D1, D0) will be divided by K1,234 (which has been automatically converted to a binary floating-point number), and the results stored in (D11, D10).

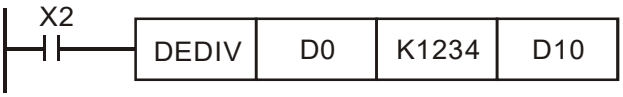

API 124	D	EXP	P	S D	Binary floating point number obtain exponent

	Bit device			Word device							
	X	Y	M	K	H	KnX	KnY	KnM	T	C	D
S				*	*						*
D											*

Notes on operand usage:
Please refer to the function specifications table for each device in series for the scope of device usage

16-bit command			
—	—	—	—

32-bit command (9 STEP)			
DEXP	Continuous execution type	DEXPP	Pulse execution type

Flag signal: none

Explanation

- **S**: operation source device. **D**: operation results device.
- Taking e =2.71828 as a base, **S** is the exponent in the EXP operation.
- [**D** +1，**D**]=EXP[**S +1**，**S**]
- Valid regardless of whether the content of **S** has a positive or negative value. The designated register D must have a 32-bit data format. This operation is performed using floating-point numbers, and **S** must therefore be converted to a floating point number.
- Content of operand **D** =e^{S} ; e=2.71828, **S** is the designated source data

Example

- When M0 is On, the value of (D1, D0) will be converted to a binary floating point number, which will be stored in register (D11, D10).
- When M1 is On, the EXP operation is performed on the exponent of (D11, D10); its value is a binary floating point number stored in register (D21, D20).

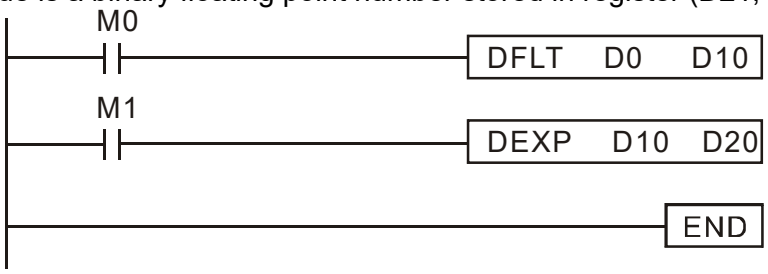

API 125	D	LN	P	S D	Binary floating point number obtain logarithm

	Bit device			Word device							
	X	Y	M	K	H	KnX	KnY	KnM	T	C	D
S				*	*						*
D											*

Notes on operand usage:
Please refer to the function specifications table for each device in series for the scope of device usage

16-bit command

—	—	—	—

32-bit command (9 STEP)

DLN	Continuous execution type	DLNP	Pulse execution type

Flag signal: none

Explanation

- **S**: operation source device. **D**: operation results device.
- Taking e =2.71828 as a base, **S** is the exponent in the EXP operation.
- [**D** +1，**D**]=EXP[**S +1**，**S**]
- Valid regardless of whether the content of **S** has a positive or negative value. The designated register D must have a 32-bit data format. This operation is performed using floating-point numbers, and **S** must therefore be converted to a floating point number.
- Content of operand **D** =e^S ; e=2.71828， **S** is the designated source data

Example

- When M0 is On, the value of (D1, D0) will be converted to a binary floating point number, which will be stored in register (D11, D10).
- When M1 is On, the EXP operation is performed on the exponent of (D11, D10); its value is a binary floating point number stored in register (D21, D20).

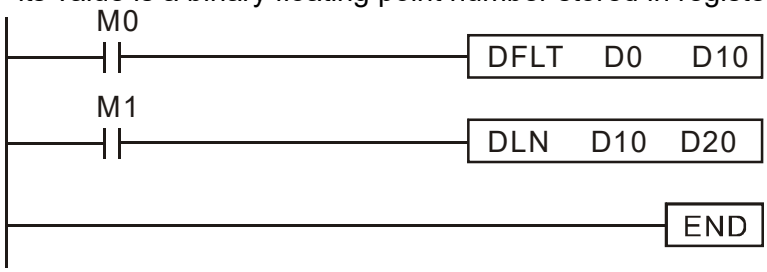

API 127	D	ESQR	P	(S) (D)	Binary floating point number find square root

	Bit device			Word device							
	X	Y	M	K	H	KnX	KnY	KnM	T	C	D
S				*	*						*
D											*

Notes on operand usage:
Please refer to the function specifications table for each device in series for the scope of device usage

16-bit command			
—	—	—	—

32-bit command (9 STEP)			
DESQR	Continuous execution type	DESQR P	Pulse execution type

Flag signal: none

Explanation

- **S**: source device for which square root is desired **D**: result of finding square root.
- When the square root is taken of the content of the register designated by **S**, the result is temporarily stored in the register designated by **D**. Taking square roots is performed entirely using binary floating-point numbers.
- If the source operand **S** refers to a constant K or H, the command will transform that constant into a binary floating point number for use in the operation.

Example

- When X0=On, the square root is taken of the binary floating point number (D1, D0), and the result is stored in the register designated by (D11, D10).

$$\sqrt{(D1 \cdot D0)} \longrightarrow (D11 \cdot D10)$$

Binary floating point Binary floating point

- When X2 =On, the square root is taken of K1,234 (which has been automatically converted to a binary floating-point number), and the results stored in (D11, D10).

API 129	D	INT	P	S D	Binary floating point number → BIN whole number transformation

	Bit device			Word device							
	X	Y	M	K	H	KnX	KnY	KnM	T	C	D
S											*
D											*

Notes on operand usage:
Please refer to the function specifications table for each device in series for the scope of device usage

16-bit command (5 STEP)

INT	Continuous execution type	INTP	Pulse execution type

32-bit command (9 STEP)

DINT	Continuous execution type	DINTP	Pulse execution type

Flag signal: none

Explanation

- **S**: the source device to be transformed. **D**: results of transformation.
- The content of the register designated by **S** is transformed from a binary floating point number format into a BIN whole number, and is temporarily stored in **D**. The BIN whole number floating point number will be discarded.
- The action of this command is the opposite of that of command API 49 (FLT).

Example

- When X0=On, the binary floating point number (D1, D0) is transformed into a BIN whole number, and the result is stored in (D10); the BIN whole number floating point number will be discarded.

API 130	D	SIN	P	(S) (D)	Binary floating point number SIN operation

	Bit device			Word device							
	X	Y	M	K	H	KnX	KnY	KnM	T	C	D
S				*	*						*
D											*

Notes on operand usage:
Please refer to the function specifications table for each device in series for the scope of device usage

16-bit command

—	—	—	—

32-bit command (9 STEP)

DSIN	Continuous execution type	DSINP	Pulse execution type

Flag signal: none

Explanation

- **S**: the designated source value. **D**: the SIN value result.
- **S** is the designated source in radians.
- The value in radians (RAD) is equal to (angle ×π/180).
- The SIN obtained from the source value designated by **S** is stored in **D**.

The following figure displays the relationship between the arc and SIN results:

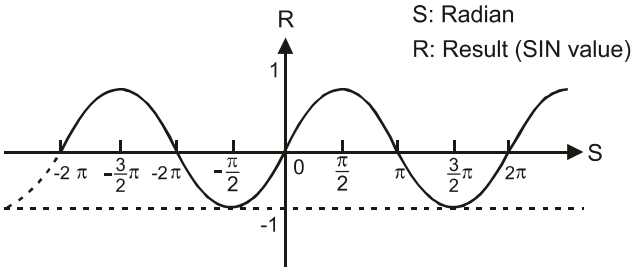

Example

- When X0=On, the SIN value of the designated binary floating point number (D1, D0) in radians (RAD) will be stored in (D11, D10), with the content consisting of a binary floating point number.

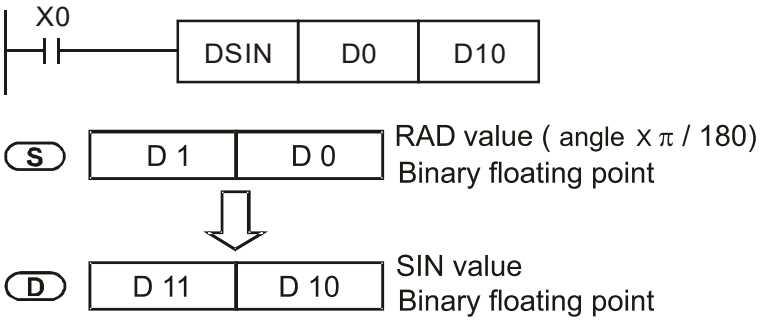

API 131	D	COS	P	(S) (D)	Binary floating point number COS operation

	Bit device			Word device							
	X	Y	M	K	H	KnX	KnY	KnM	T	C	D
S				*	*						*
D											*

Notes on operand usage:
Please refer to the function specifications table for each device in series for the scope of device usage

16-bit command

—	—	—	—

32-bit command (9 STEP)

DCOS	Continuous execution type	DCOSP	Pulse execution type

Flag signal: none

Explanation

- **S**: the designated source value. **D**: the COS value result.
- The source designated by S can be given as radians or an angle; this is decided by flag M1018.
- When M1018=Off, the operation is in radians mode, where the radians (RAD) value is equal to (angle ×π/180).
- When M1018=On, the operation is in the angle mode, where the angular range is 0°≤ angle <360°.
- When calculation results yield 0, M1020=On.
- The COS obtained from the source value designated by **S** is stored in **D**.

The following figure displays the relationship between the arc and SIN results:

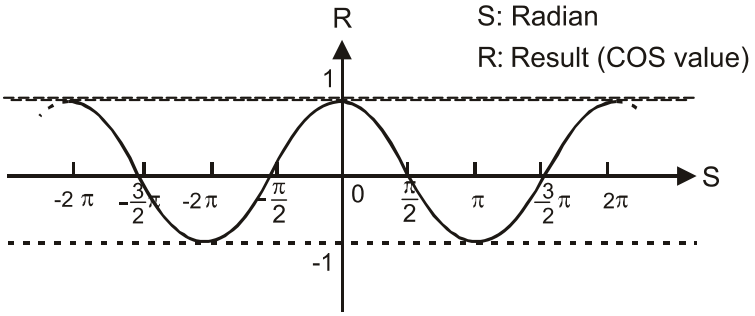

Example

- When X0=On, the COS value of the designated binary floating point number (D1, D0) in radians will be stored in (D11, D10), with the content consisting of a binary floating point number.

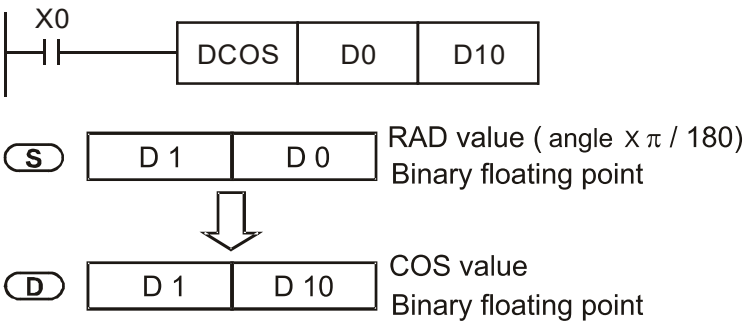

API 132	D	TAN	P	(S) (D)	Binary floating point number TAN operation

	Bit device			Word device							
	X	Y	M	K	H	KnX	KnY	KnM	T	C	D
S				*	*						*
D											*

Notes on operand usage:
Please refer to the function specifications table for each device in series for the scope of device usage

16-bit command

—	—	—	—

32-bit command (9 STEP)

DTAN	Continuous execution type	DTANP	Pulse execution type

Flag signal: none

Explanation

- **S**: the designated source value. **D**: the TAN value result.
- The source designated by **S** can be given as radians or an angle; this is decided by flag M1018.
- When M1018=Off, the operation is in radians mode, where the radians (RAD) value is equal to (angle ×π/180).
- When M1018=On, the operation is in the angle mode, where the angular range is 0°≤ angle <360°.
- When calculation results yield 0, M1020=On.
- The TAN obtained from the source value designated by **S** is stored in **D**.

The following figure displays the relationship between the arc and TAN results:

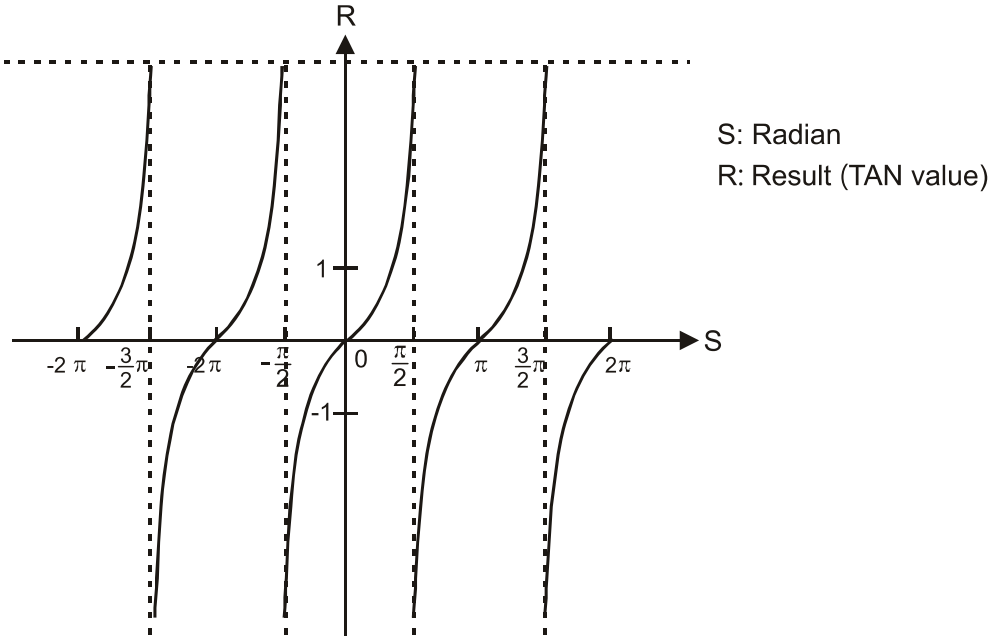

Example

- When X0=On, the TAN value of the designated binary floating point number (D1, D0) in radians (RAD) will be stored in (D11, D10), with the content consisting of a binary floating point number.

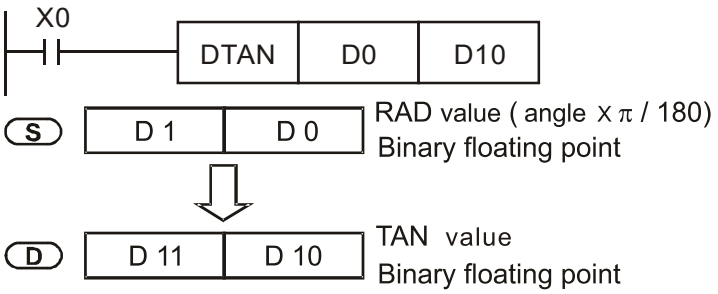

API 133	D	ASIN	P	(S) (D)	Binary floating point number ASIN operation

	Bit device			Word device							
	X	Y	M	K	H	KnX	KnY	KnM	T	C	D
S				*	*						*
D											*

Notes on operand usage:
Please refer to the function specifications table for each device in series for the scope of device usage

16-bit command

—	—	—	—

32-bit command (9 STEP)

DASIN	Continuous execution type	DASINP	Pulse execution type

Flag signal: none

Explanation

- **S**: the designated source (binary floating point number). **D**: the ASIN value result.
- ASIN value $=\sin^{-1}$

The figure below shows the relationship between input data and result:

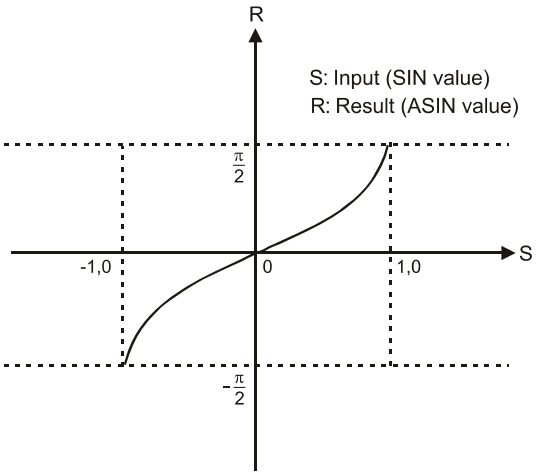

Example

- When X0=On, the ASIN value obtained from the designated binary floating point number (D1, D0) will be stored in (D11, D10), with the content consisting of a binary floating point number.

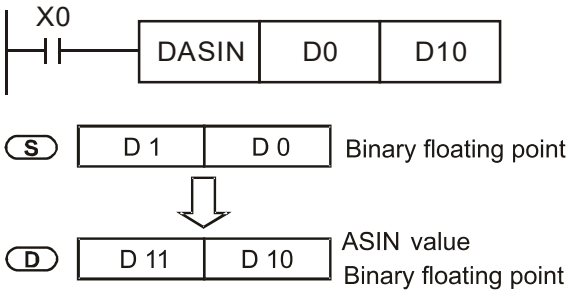

API 134	D	ACOS	P	(S) (D)	Binary floating point number ACOS operation

	Bit device			Word device							
	X	Y	M	K	H	KnX	KnY	KnM	T	C	D
S				*	*						*
D											*

Notes on operand usage:
Please refer to the function specifications table for each device in series for the scope of device usage

16-bit command

—	—	—	—

32-bit command (9 STEP)

DACOS	Continuous execution type	DACOS P	Pulse execution type

Flag signal: none

Explanation

- **S**: the designated source (binary floating point number). **D**: the ACOS value result.
- ACOS value =$\cos^{-1}$

The figure below shows the relationship between input data and result:

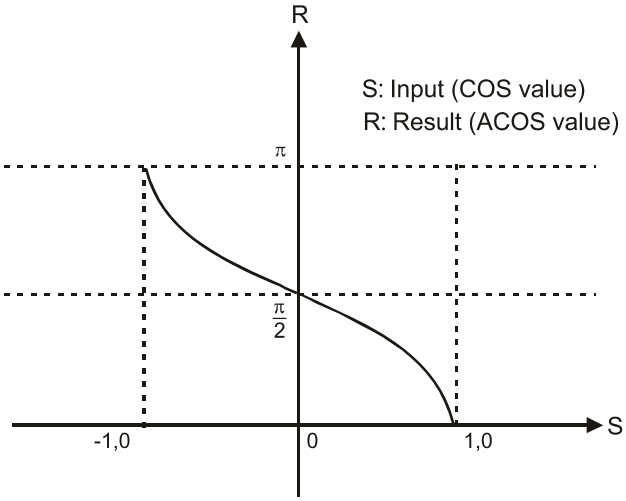

Example

- When X0=On, the ACOS value obtained from the designated binary floating point number (D1, D0) will be stored in (D11, D10), with the content consisting of a binary floating point number.

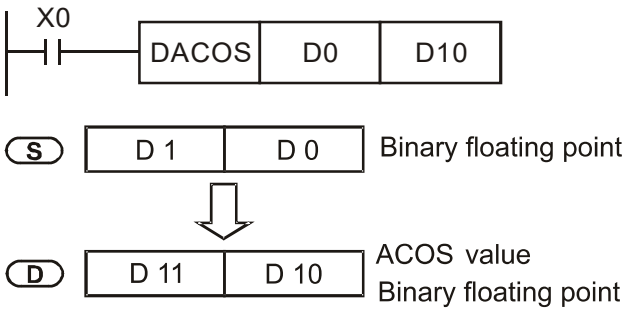

API 135	D	ATAN	P	(S) (D)	Binary floating point number ATAN operation

	Bit device			Word device							
	X	Y	M	K	H	KnX	KnY	KnM	T	C	D
S				*	*						*
D											*

Notes on operand usage:
Please refer to the function specifications table for each device in series for the scope of device usage

16-bit command

—	—	—	—

32-bit command (9 STEP)

DATAN	Continuous execution type	DATANP	Pulse execution type

Flag signal: none

Explanation

- **S**: the designated source (binary floating point number). **D**: the ATAN value result.
- ATAN value =$\tan^{-1}$

The figure below shows the relationship between input data and result:

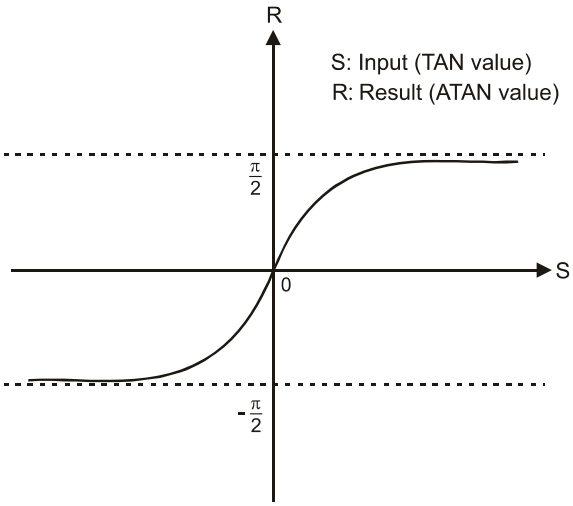

Example

- When X0=On, the TAN value obtained from the designated binary floating point number (D1, D0) will be stored in (D11, D10), with the content consisting of a binary floating point number.

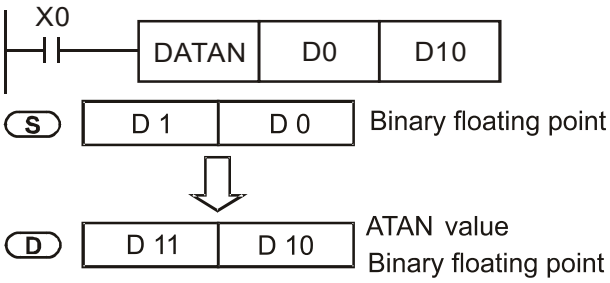

API 136	D	SINH	P	(S) (D)	Binary floating point number SINH operation

	Bit device			Word device							
	X	Y	M	K	H	KnX	KnY	KnM	T	C	D
S				*	*						*
D											*

Notes on operand usage:
Please refer to the function specifications table for each device in series for the scope of device usage

16-bit command			
—	—	—	—

32-bit command (9 STEP)			
DSINH	Continuous execution type	DSINHP	Pulse execution type

Flag signal: none

Explanation

- **S**: the designated source (binary floating point number). **D**: the SINH value result.
- SINH value $=(e^{s}-e^{-s})/2$

Example

- When X0=On, the SINH value obtained from the designated binary floating point number (D1, D0) will be stored in (D11, D10), with the content consisting of a binary floating point number.

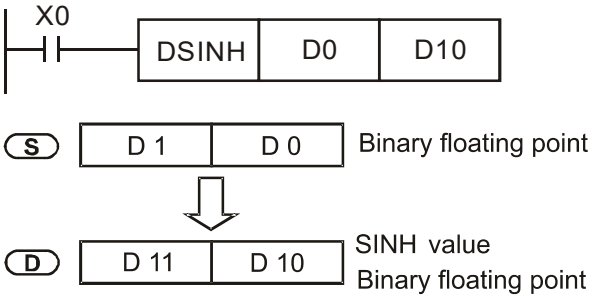

API 137	D	COSH	P	(S) (D)	Binary floating point number COSH operation

	Bit device			Word device							
	X	Y	M	K	H	KnX	KnY	KnM	T	C	D
S				*	*						*
D											*

Notes on operand usage:
Please refer to the function specifications table for each device in series for the scope of device usage

16-bit command

—	—	—	—

32-bit command (9 STEP)

DCOSH	Continuous execution type	DCOSH P	Pulse execution type

Flag signal: none

Explanation

- **S**: the designated source (binary floating point number). **D**: the COSH value result.
- COSH value $=(e^{s}+e^{-s})/2$

Example

- When X0=On, the COSH value obtained from the designated binary floating point number (D1, D0) will be stored in (D11, D10), with the content consisting of a binary floating point number.

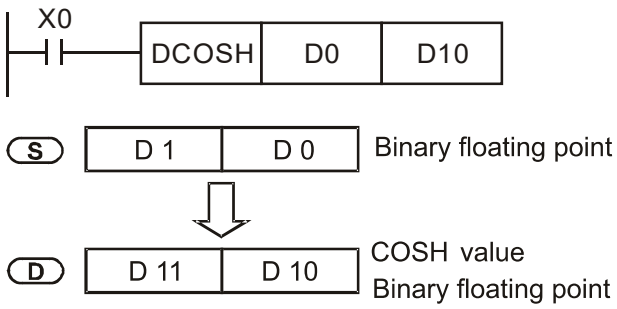

API 138	D	TANH	P	(S) (D)	Binary floating point number TANH operation

	Bit device			Word device							
	X	Y	M	K	H	KnX	KnY	KnM	T	C	D
S				*	*						*
D											*

Notes on operand usage:
Please refer to the function specifications table for each device in series for the scope of device usage

16-bit command

—	—	—	—

32-bit command (9 STEP)

DTANH	Continuous execution type	DTANH P	Pulse execution type

Flag signal: none

Explanation

- **S**: the designated source (binary floating point number). **D**: the TANH value result.
- TANH value $=(e^{s}-e^{-s})/(e^{s}+e^{-s})$

Example

- When X0=On, the TANH value obtained from the designated binary floating point number (D1, D0) will be stored in (D11, D10), with the content consisting of a binary floating point number.

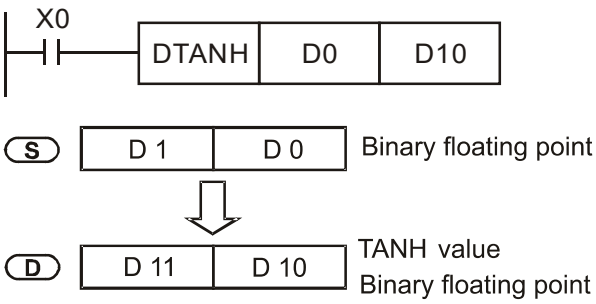

API 147	D	SWAP	P	(S)	Exchange the up/down 8 bits

	Bit device			Word device							
	X	Y	M	K	H	KnX	KnY	KnM	T	C	D
S						*	*	*	*	*	*

Notes on operand usage: none

16-bit command (3 STEP)

SWAP	Continuous execution type	SWAPP	Pulse execution type

32-bit command (5 STEP)

DSWAP	Continuous execution type	DSWAPP	Pulse execution type

Flag signal: none

Explanation

- (S): The device that going to exchange its up/down 8 bits.
- When using 16-bit command, the upper 8-bit and lower 8-bit exchange.
- When using 32-bit command, the contents of upper 8-bit and lower 8-bit of the 2 registers exchange.
- This command usually uses pulse execution type (SWAPP, DSWAPP)

API 150	MODRW P	S1 S2 S3 S n	MODBUS data read/write

	Bit device			Word device							
	X	Y	M	K	H	KnX	KnY	KnM	T	C	D
S1				*	*						*
S2				*	*						*
S3				*	*						*
S											*
n				*	*						*

16-bit command (5 STEP)			
MODRW	Continuous execution type	MODRW P	Pulse execution type
32-bit command			
—	—	—	—

Flag signal: M1077 M1078 M1079

Explanation

- S1: online device address. S2: communications function code. S3: address of data to read/write. S: register for data to be read/written is stored. N: length of data to be read/written.
- COM1 must be defined as controlled by the PLC (set Pr.09-31 = -12) before using this command, and the corresponding communications speed and format must also be set (set Pr.09-01 and Pr.09-04). S2: communications function code. Currently only supports the following function code; the remaining function code cannot be executed.

Function	Description
H 02	Input read
H 03	Read word
H 06	Write single word
H 0F	Write multiple coils
H 10	Write single word

- After executing this command, M1077, M1078 and M1079 will be immediately changed to 0.
- As an example, when C2000 Plus must control another converter and PLC, if the converter has a station number of 10 and the PLC has a station number of 20, see the following example:

Control slave device converter

Serial No.	Example	MODRW command				
		S1	S2	S3	S4	n
		Node ID	Function code	Address	Register	Length:
1	Reads 4 sets of data comprising the converter slave device parameters Pr.01-00 to Pr.01-03, and saves the read data in D0 to D3	K10	H3	H100	D0	K4
2	Reads 3 sets of data comprising the converter slave device addresses H2100 to H2102, and saves the read data in D5 to D7	K10	H3	H2100	D5	K3
3	Writes 3 sets of data comprising the converter slave device parameters Pr.05-00 to Pr.05-03, and writes the values as D10 to D12	K10	H10	H500	D10	K3
4	Writes 2 sets of data comprising the converter slave device addresses H2000 to H2001, and writes the values as D15 to D16	K10	H10	H2000	D15	K2

PLC controlling slave device

Serial No.	Example	MODRW command				
		S1	S2	S3	S4	n
		Node ID	Function code	Address	Register	Length:
1	Reads 4 sets of data comprising the PLC slave device's X0 to X3 state, and saves the read data in bits 0 to 3 of D0	K20	H2	H400	D0	K4
2	Reads 4 sets of data comprising the PLC slave device's Y0 to Y3 state, and saves the read data in bits 0 to 3 of D1	K20	H2	H500	D1	K4
3	Reads 4 sets of data comprising the PLC slave device's M0 to M3 state, and saves the read data in bits 0 to 3 of D2	K20	H2	H800	D2	K4
4	Reads 4 sets of data comprising the PLC slave device's T0 to T3 state, and saves the read data in bits 0 to 3 of D3	K20	H2	H600	D3	K4
5	Reads 4 sets of data comprising the PLC slave device's C0 to C3 state, and saves the read data in bits 0 to 3 of D4	K20	H2	HE00	D4	K4
6	Reads 4 sets of data comprising the PLC slave device's T0 to T3 count value, and saves the read data of D10 to D13	K20	H3	H600	D10	K4
7	Reads 4 sets of data comprising the PLC slave device's C0 to C3 count value, and saves the read data of D20 to D23	K20	H3	HE00	D20	K4
8	Reads 4 sets of data comprising the PLC slave device's D0 to D3 count value, and saves the read data of D30 to D33	K20	H3	H1000	D30	K4
9	Writes 4 sets of the PLC slave device's Y0 to Y3 state, and writes the values as bits 0 to 3 of D1	K20	HF	H500	D1	K4
10	Writes 4 sets of the PLC slave device's M0 to M3 state, and writes the values as bits 0 to 3 of D2	K20	HF	H800	D2	K4
11	Writes 4 sets of the PLC slave device's T0 to T3 state, and writes the values as bits 0 to 3 of D3	K20	HF	H600	D3	K4
12	Writes 4 sets of the PLC slave device's C0 to C3 state, and writes the values as bits 0 to 3 of D4	K20	HF	HE00	D4	K4
13	Writes 4 sets of the PLC slave device's T0 to T3 state, and writes the values of D10 to D13	K20	H10	H600	D10	K4
14	Writes 4 sets of the PLC slave device's C0 to C3 state, and writes the values of D20 to D23	K20	H10	HE00	D20	K4
15	Writes 4 sets of the PLC slave device's D0 to D3 state, and writes the values of D30 to D33	K20	H10	H1000	D30	K4

Example

- Will trigger M0 On when the PLC begins to operate, and sends instruction to execute one MODRW command.
- After receiving the slave device's response, if the command is correct, it will execute one ROL command, which will cause M1 to be On.
- After receiving the slave device's response, will trigger M50 = 1 after a delay of 10 PLC scanning cycles, and then execute one MODRW command.
- After again receiving the slave device's response, if the command is correct, it will execute one ROL command, and M2 will change to On at this time (and M2 can be defined as a repeat of M); K4M0 will change to K1, and only M0 will remain 1. Transmission can proceed in a continuous cycle. If you wish to add a command, merely add the desired command in the empty frame, and change repeat M to Mn+1.

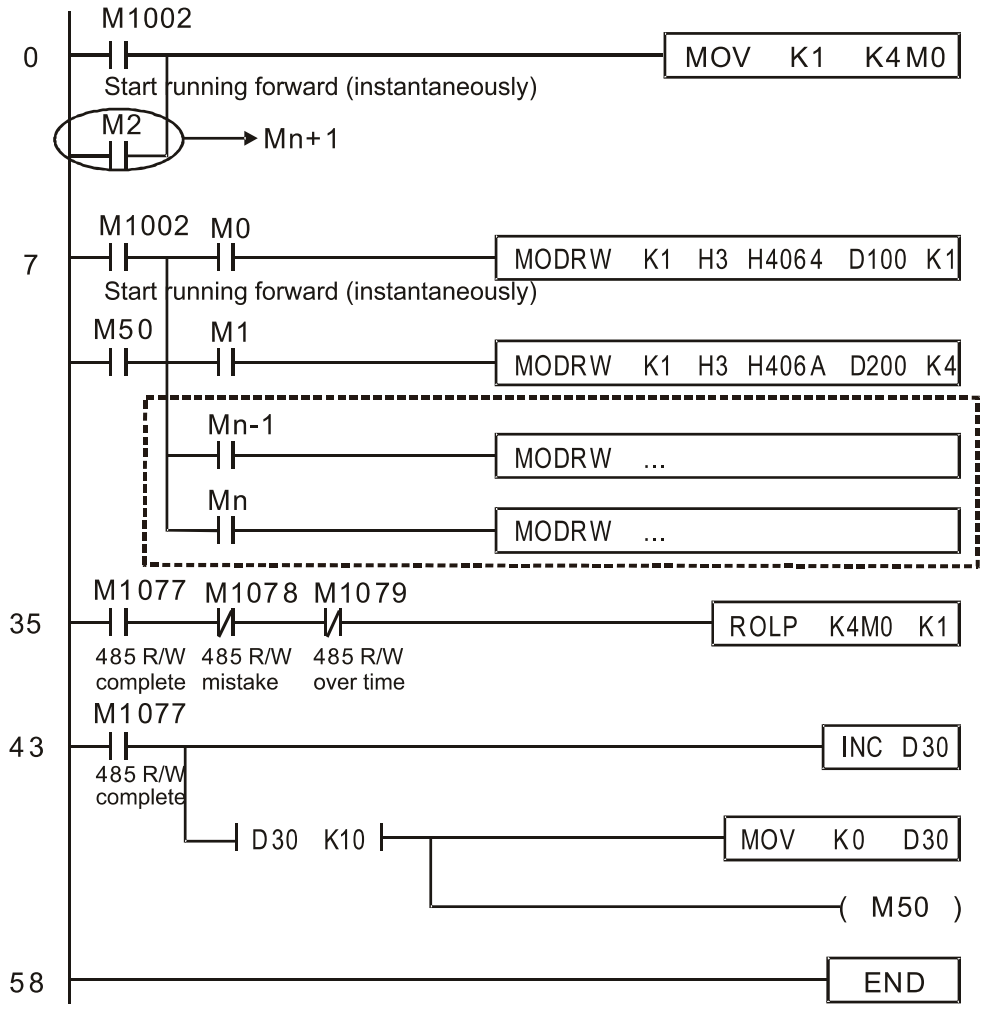

API 160	TCMP	P	S1 S2 S3 S D	Comparison of calendar data

	Bit device			Word device							
	X	Y	M	K	H	KnX	KnY	KnM	T	C	D
S1				*	*	*	*	*	*	*	*
S2				*	*	*	*	*	*	*	*
S3				*	*	*	*	*	*	*	*
S									*	*	*
D		*	*								

Notes on operand usage:
Please refer to the function specifications table for each device in series for the scope of device usage

16-bit command (11 STEP)

TCMP	Continuous execution type	TCMPP	Pulse execution type

32-bit command

–	–	–	–

Flag signal: none

Explanation

- **S_1**: Sets the hours of the comparison time, setting range is "K0–K23." **S_2**: Sets the minutes of the comparison time, setting range is "K0–K59." **S_3**: Sets the seconds of the comparison time, setting range is "K0–K59." **S**: current calendar time. **D**: Results of comparison.
- Compares the time in hours, minutes, and seconds set in **S_1**–**S_3** with the current calendar time in hours, minutes, and seconds, with the results of comparison expressed in **D**.
- **S** The hour content of the current calendar time is "K0–K23." **S** +1 comprises the minutes of the current calendar time, and consists of "K0–K59." **S** +2 comprises the seconds of the current calendar time, and consists of "K0–K59."
- The current calendar time designated by **S** is usually compared using the TCMP command after using the TRD command to read the current calendar time. If the content value of **S** exceeds the range, this is considered an operating error, the command will not execute, and M1068=On.

Example

- When X10=On, the command will execute, and the current calendar time in D20–D22 will be compared with the preset value of 12:20:45; the results will be displayed in M10–M12. When X10 On→Off, the command will not be executed, but the On/Off status prior to M10–M12 will be maintained.
- If results in the form of ≥, ≤, or ≠ are needed, they can be obtained by series and parallel connection of M10–M12.

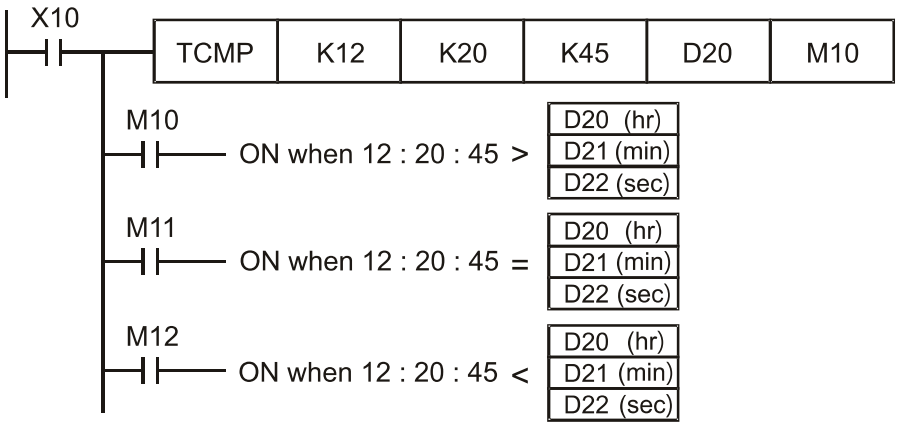

API 161	TZCP	P	S1 S2 S D	Comparison of calendar data

	Bit device			Word device							
	X	Y	M	K	H	KnX	KnY	KnM	T	C	D
S1									*	*	*
S2									*	*	*
S									*	*	*
D		*	*								

Notes on operand usage:
Please refer to the function specifications table for each device in series for the scope of device usage

16-bit command (9 STEP)

TZCP	Continuous execution type	TZCPP	Pulse execution type

32-bit command

—	—	—	—

Flag signal: none

Explanation

- **S_1**: Sets the lower limit of the comparison time. **S_2**: Sets the upper limit of the comparison time. **S**: current calendar time. **D**: Results of comparison.
- Performs range comparison by comparing the hours, minutes, and seconds of the current calendar time designated by **S** with the lower limit of the comparison time set as **S_1** and the upper limit of the comparison time set as **S_2**, and expresses the results of comparison in **D**.
- **S_1**、**S_1** +1、**S_1** +2: Sets the hours, minutes, and seconds of the lower limit of the comparison time.
- **S_2**、**S_2** +1、**S_2** +2: Sets the hours, minutes, and seconds of the upper limit of the comparison time.
- **S**、**S** +1、**S** +2: The hours, minutes, and seconds of the current calendar time
- The D0 designated by the **S** listed in this program is usually obtained by comparison using the TZCP command after using the TRD command in advance to read the current calendar time. If the value of **S_1**, **S_2**, or **S** exceeds the range, this is considered an operating error, the command will not execute, and M1068=On.
- When the current time **S** is less than the lower limit value **S_1** and **S** is less than the upper limit value **S_2**, **D** will be On. When the current time **S** is greater than the lower limit value **S_1** and **S** is greater than the upper limit value **S_2**, **D** +2 will be On; **D** +1 will be On under other conditions.

Example

- When X10=On, the TZCP command executes, and one of M10–M12 will be On. When X10=Off, the TZCP command will not execute, and M10–M12 will remain in the X10=Off state.

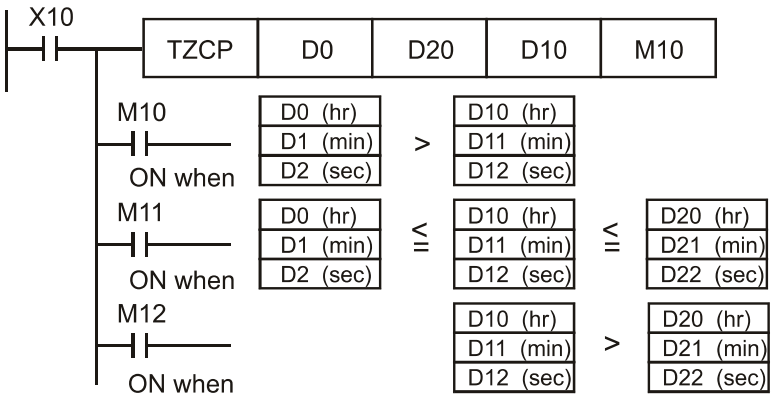

API 162	TADD	P	S1 S2 D	Calendar data addition

	Bit device			Word device							
	X	Y	M	K	H	KnX	KnY	KnM	T	C	D
S1									*	*	*
S2									*	*	*
D									*	*	*

Notes on operand usage:
Please refer to the function specifications table for each device in series for the scope of device usage

16-bit command (7 STEP)			
TADD	Continuous execution type	TADDP	Pulse execution type
32-bit command			
—	—	—	—

- Flag signal: M1020 Zero flag
  M1022 Carry flag
  M1068 Calendar error

Explanation

- **S_1**: time addend. **S_2**: time augend. **D**: time sum.
- The calendar data in hours, minutes, and seconds designated by **S_2** is added to the calendar data in hours, minutes, and seconds designated by **S_1**, and the result is stored as hours, minutes, and seconds in the register designated by **D**.
- If the value of **S_1** or **S_2** exceeds the range, this is considered an operating error, the command will not execute, M1067, M1068=On, and D1067 will record the error code 0E1A(HEX).
- If the results of addition are greater than or equal to 24 hours, carry flag M1022=On, and **D** will display the results of addition minus 24 hours.
- If the results of addition are equal to 0 (0 hours, 0 minutes, 0 seconds), zero flag M1020=On.

Example

- When X10=On, the TADD command will be executed, and the calendar data in hours, minutes, and seconds designated by D0 to D2 will be added to the calendar data in hours, minutes, and seconds designated by D10 to D12, and the results are stored as a total number of hours, minutes, and seconds in the registers designated by D20 to D22.

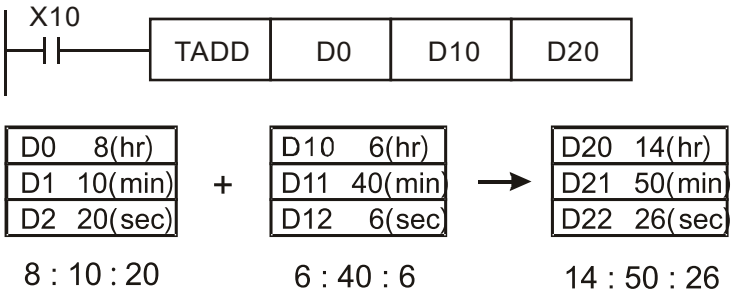

API 163	TSUB	P	S1 S2 D	Calendar data subtraction

	Bit device			Word device							
	X	Y	M	K	H	KnX	KnY	KnM	T	C	D
S1									*	*	*
S2									*	*	*
D									*	*	*

Notes on operand usage:
Please refer to the function specifications table for each device in series for the scope of device usage

16-bit command (7 STEP)			
TSUB	Continuous execution type	TSUBP	Pulse execution type
32-bit command			
—	—	—	—

- Flag signal: M1020 Zero flag
  M1022 Carry flag
  M1068 Calendar error

Explanation

- **S_1**: time minuend. **S_2**: time augend. **D**: time sum.
- Subtracts the calendar data in hours, minutes, and seconds designated by **S_2** from the calendar data in hours, minutes, and seconds designated by **S_1**, and the result is temporarily stored as hours, minutes, and seconds in the register designated by **D**.
- If the value of **S_1** or **S_2** exceeds the range, this is considered an operating error, the command will not execute, M1067, M1068=On, and D1067 will record the error code 0E1A(HEX).
- If subtraction results in a negative number, borrow flag M1021=On, and the result of that negative number plus 24 hours will be displayed in the register designated by **D**.
- If the results of subtraction are equal to 0 (0 hours, 0 minutes, 0 seconds), zero flag M1020=On.

Example

- When X10=On, the TADD command will be executed, and the calendar data in hours, minutes, and seconds designated by D10 to D12 will be subtracted from the calendar data in hours, minutes, and seconds designated by D0 to D2, and the results are stored as a total number of hours, minutes, and seconds in the registers designated by D20 to D22.

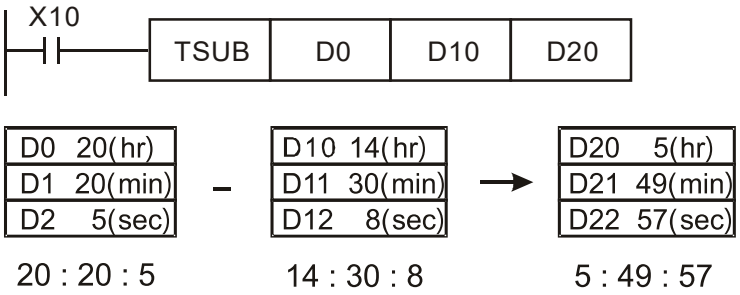

API 166	TRD	P	D	Calendar data read

	Bit device			Word device							
	X	Y	M	K	H	KnX	KnY	KnM	T	C	D
D									*	*	*

Notes on operand usage:
Please refer to the function specifications table for each device in series for the scope of device usage

16-bit command (3 STEP)			
TRD	Continuous execution type	TRDP	Pulse execution type
32-bit command			
—	—	—	—

- Flag signal: none

Explanation

- **S_1**: time minuend. **S_2**: time augend. **D**: time sum.
- **D**: device used to store the current calendar time after reading.
- The EH/EH2/SV/EH3/SV2/SA/SX/SC main units have a built-in calendar clock, and the clock provides seven sets of data comprising year, week, month, day, hour, minute, and second stored in D1063 to D1069. The TRD command function allows program designers to directly read the current calendar time into the designated seven registers.
- D1063 only reads the two right digits of the Western calendar year.

Example

- When X0=On, the current calendar time is read into the designated registers D0 to D6.
- In D1064, 1 indicates Monday, 2 indicates Tuesday, and so on, with and 7 indicating Sunday.

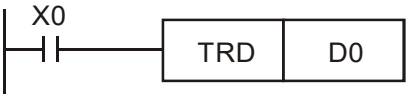

Special D	Item	Content		General D	Item
D1063	Year (Western)	00–99	→	D0	Year (Western)
D1064	Weeks	1–7	→	D1	Weeks
D1065	Month	1–12	→	D2	Month
D1066	Day	1–31	→	D3	Day
D1067	Hour	0–23	→	D4	Hour
D1068	Minute	0–59	→	D5	Minute
D1069	Second	0–59	→	D6	Second

API 170	D	GRY	P	S D	BIN→GRAY code transformation

	Bit device			Word device							
	X	Y	M	K	H	KnX	KnY	KnM	T	C	D
S				*	*	*	*	*	*	*	*
D							*	*	*	*	*

Notes on operand usage:
Please refer to the function specifications table for each device in series for the scope of device usage

16-bit command (5 STEP)

GRY	Continuous execution type	GRYP	Pulse execution type

32-bit command (9 STEP)

DGRY	Continuous execution type	DGRYP	Pulse execution type

- Flag signal: none

Explanation

- **S**: source device. **D**: device storing GRAY code.
- Transforms the content value (BIN value) of the device designated by **S** to GRAY code, which is stored in the device designated by **D**.
- The valid range of **S** is as shown below; if this range is exceeded, it will be considered an error, and the command will not execute.

  16-bit command: 0–32,767

- 32-bit command: 0–2,147,483,647

Example

- When X0=On, the constant K6513 will be transformed to GRAY code and stored in D0.

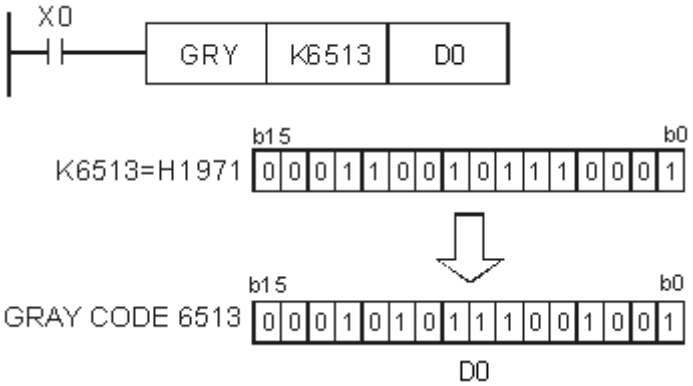

API 171	D	GBIN	P	S D	GRAY code →BIN transformation

	Bit device			Word device							
	X	Y	M	K	H	KnX	KnY	KnM	T	C	D
S				*	*	*	*	*	*	*	*
D							*	*	*	*	*

Notes on operand usage:
Please refer to the function specifications table for each device in series for the scope of device usage

16-bit command (5 STEP)

GBIN	Continuous execution type	GBINP	Pulse execution type

32-bit command (9 STEP)

DGBIN	Continuous execution type	DGBINP	Pulse execution type

- Flag signal: none

Explanation

- **S**: source device used to store GRAY code. **D**: device used to store BIN value after transformation.
- The GRAY code corresponding to the value of the device designated by **S** is transformed into a BIN value, which is stored in the device designated by **D**.
- This command will transform the value of the absolute position encoder connected with the PLC's input and (this encoder usually has an output value in the form of GRAY code) into a BIN value, which is stored in the designated register.
- The valid range of **S** is as shown below; if this range is exceeded, it will be considered an error, and the command will not execute.

  16-bit command: 0–32,767
- 32-bit command: 0–2,147,483,647

Example

- When X20=On, the GRAY code of the absolute position encoder connected with input points X0 to X17 will be transformed into BIN value and stored in D10.

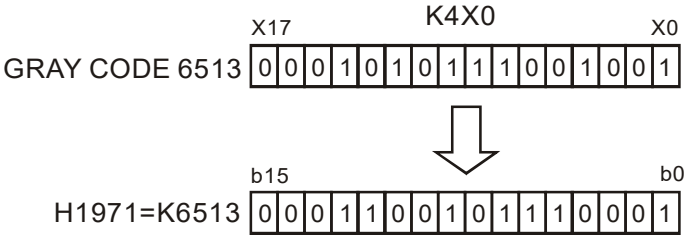

API 215–217	D	LD#		(S1) (S2)	Contact form logical operation LD#

	Bit device			Word device							
	X	Y	M	K	H	KnX	KnY	KnM	T	C	D
S1				*	*	*	*	*	*	*	*
S2				*	*	*	*	*	*	*	*

Notes on operand usage: # ：&、|、^
Please refer to the function specifications table for each device in series for the range of device usage

16-bit command (5 STEP)			
LD#	Continuous execution type	—	—

32-bit command (9 STEP)			
DLD#	Continuous execution type	—	—

Flag signal: none

Explanation

- **S_1**: data source device 1. **S_2**: data source device 2.
- This command performs comparison of the content of **S_1** and **S_2**; when the result of comparison is not 0, this command will be activated, but this command will not be activated when the result of comparison is 0.
- The LD#This command can be used while directly connected with the busbar

API No.	16-bit commands	32-bit commands	Conditions for activation				Conditions for inactivation			
215	LD&	**D**LD&	**S_1**	&	**S_2**	≠0	**S_1**	&	**S_2**	=0
216	LD|	**D**LD|	**S_1**	|	**S_2**	≠0	**S_1**	|	**S_2**	=0
217	LD^	**D**LD^	**S_1**	^	**S_2**	≠0	**S_1**	^	**S_2**	=0

- &: logical AND operation.
- |: logical OR operation.
- ^: logical XOR operation.

Example

- When the content of C0 and C10 is subjected to the logical AND operation, and the result is not equal to 0, Y10=On.
- When the content of D200 and D300 is subjected to the logical OR operation, and the result is not equal to 0, and X1=On, Y11=On and remains in that state.

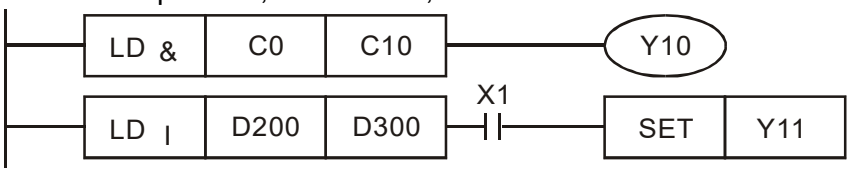

API 218–220	D	AND#		(S1) (S2)	Contact form logical operation AND#

	Bit device			Word device							
	X	Y	M	K	H	KnX	KnY	KnM	T	C	D
S1				*	*	*	*	*	*	*	*
S2				*	*	*	*	*	*	*	*

Notes on operand usage: # ：&、|、^
Please refer to the function specifications table for each device in series for the scope of device usage

16-bit command (5 STEP)			
AND#	Continuous execution type	—	—

32-bit command (9 STEP)			
DAND#	Continuous execution type	—	—

Flag signal: none

Explanation

- **S_1**: data source device 1. **S_2**: data source device 2.
- This command performs comparison of the content of **S_1** and **S_2**; when the result of comparison is not 0, this command will be activated, but this command will not be activated when the result of comparison is 0.
- The AND# command is an operation command in series with the contact.

API No.	16-bit commands	32-bit commands	Conditions for activation				Conditions for inactivation			
218	AND&	**D**AND&	**S_1**	&	**S_2**	≠0	**S_1**	&	**S_2**	=0
219	AND|	**D**AND|	**S_1**	|	**S_2**	≠0	**S_1**	|	**S_2**	=0
220	AND^	**D**AND^	**S_1**	^	**S_2**	≠0	**S_1**	^	**S_2**	=0

- &: logical AND operation.
- |: logical OR operation.
- ^: logical XOR operation.

Example

- When X0=On and the content of C0 and C10 is subjected to the logical AND operation, and the result is not equal to 0, Y10=On.
- When X1=Off and D10 and D0 is subjected to the logical OR operation, and the result is not equal to 0, Y11=On and remains in that state.
- When X2 =On and the content of the 32-bit register D200 (D201) and 32-bit register D100 (D101) is subjected to the logical XOR operation, and the result is not equal to 0 or M3=On, M50=On.

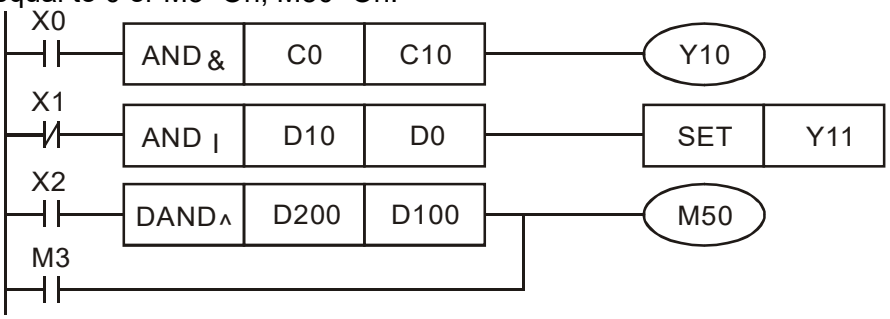

API 221–223	D	OR#		(S1) (S2)	Contact form logical operation OR#

	Bit device			Word device							
	X	Y	M	K	H	KnX	KnY	KnM	T	C	D
S1				*	*	*	*	*	*	*	*
S2				*	*	*	*	*	*	*	*

Notes on operand usage: # ：&、|、^
Please refer to the function specifications table for each device in series for the scope of device usage

16-bit command (5 STEP)			
OR#	Continuous execution type	—	—

32-bit command (9 STEP)			
DOR#	Continuous execution type	—	—

Flag signal: none

Explanation

- **S_1**: data source device 1. **S_2**: data source device 2.
- This command performs comparison of the content of **S_1** and **S_2**; when the result of comparison is not 0, this command will be activated, but this command will not be activated when the result of comparison is 0.
- The OR# command is an operation command in series with the contact.

API No.	16-bit commands	32-bit commands	Conditions for activation				Conditions for inactivation			
221	OR&	**D**OR&	**S_1**	&	**S_2**	≠0	**S_1**	&	**S_2**	=0
222	OR|	**D**OR|	**S_1**	|	**S_2**	≠0	**S_1**	|	**S_2**	=0
223	OR^	**D**OR^	**S_1**	^	**S_2**	≠0	**S_1**	^	**S_2**	=0

- &: logical AND operation.
- |: logical OR operation.
- ^: logical XOR operation.

Example

- When X1=On or the content of C0 and C10 is subjected to the logical AND operation, and the result is not equal to 0, Y0=On.
- When X2 and M30 are both equal to On, or the content of 32-bit register D10 (D11) and 32-bit register D20 (D21) is subjected to the logical OR operation, and the result is not equal to 0, or the content of the 32-bit counter C235 and the 32-bit register D200 (D201) is subjected to the logical XOR operation, and the result is not equal to 0, M60=On.

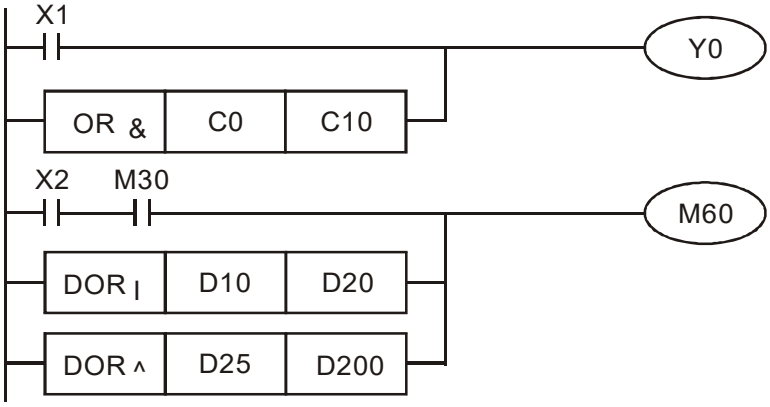

API 224–230	D	LD※		(S1) (S2)	Contact form compare LD*

	Bit device			Word device							
	X	Y	M	K	H	KnX	KnY	KnM	T	C	D
S1				*	*	*	*	*	*	*	*
S2				*	*	*	*	*	*	*	*

Notes on operand usage: ※ : = 、 > 、 < 、 <> 、 ≦ 、 ≧
Please refer to the function specifications table for each device in series for the scope of device usage

16-bit command (5 STEP)

LD※	Continuous execution type	—	—

32-bit command (9 STEP)

DLD※	Continuous execution type	—	—

Flag signal: none

Explanation

- **S_1**: data source device 1. **S_2**: data source device 2.
- This command compares the content of **S_1** and **S_2**. Taking API 224 (LD=) as an example, this command will be activated when the result of comparison is "equal," and will not be activated when the result is "unequal."
- The LD* can be used while directly connected with the busbar

API No.	16-bit commands	32-bit commands	Conditions for activation	Conditions for inactivation
224	LD＝	**D**LD＝	$S_1 = S_2$	$S_1 \neq S_2$
225	LD＞	**D**LD＞	$S_1 > S_2$	$S_1 \leqq S_2$
226	LD＜	**D**LD＜	$S_1 < S_2$	$S_1 \geqq S_2$
228	LD＜＞	**D**LD＜＞	$S_1 \neq S_2$	$S_1 = S_2$
229	LD＜＝	**D**LD＜＝	$S_1 \leqq S_2$	$S_1 > S_2$
230	LD＞＝	**D**LD＞＝	$S_1 \geqq S_2$	$S_1 < S_2$

Example

- When the content of C10 is equal to K200, Y10=On.
- When the content of D200 is greater than K-30, and X1=On, Y11=On and remains in that state.

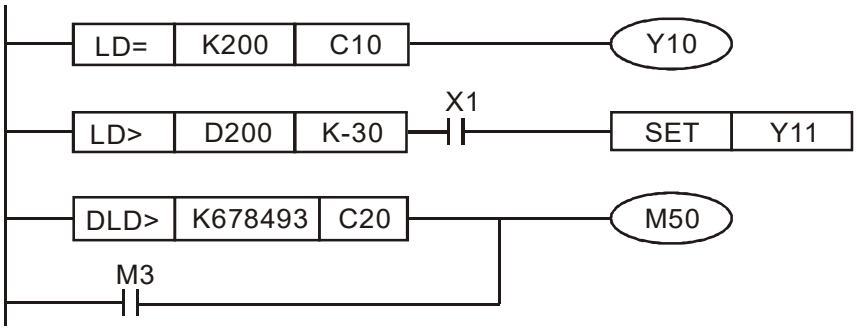

API 232–238	D	AND※		(S1) (S2)	Contact form compare AND*

	Bit device			Word device							
	X	Y	M	K	H	KnX	KnY	KnM	T	C	D
S1				*	*	*	*	*	*	*	*
S2				*	*	*	*	*	*	*	*

Notes on operand usage: ※：=、>、<、<>、≦、≧
Please refer to the function specifications table for each device in series for the scope of device usage

16-bit command (5 STEP)			
AND※	Continuous execution type	—	—

32-bit command (9 STEP)			
DAND※	Continuous execution type	—	—

Flag signal: none

Explanation

- **S_1**: data source device 1. **S_2**: data source device 2.
- This command compares the content of **S_1** and **S_2**. Taking API 232 (AND=) as an example, when the result of comparison is equal, this command will be activated; when the result of comparison is unequal, this command will not be activated.
- The AND* command is a comparison command in series with a contact.

API No.	16-bit commands	32-bit commands	Conditions for activation	Conditions for inactivation
232	AND＝	**D**AND＝	$S_1 = S_2$	$S_1 \neq S_2$
233	AND＞	**D**AND＞	$S_1 > S_2$	$S_1 \leqq S_2$
234	AND＜	**D**AND＜	$S_1 < S_2$	$S_1 \geqq S_2$
236	AND＜＞	**D**AND＜＞	$S_1 \neq S_2$	$S_1 = S_2$
237	AND＜＝	**D**AND＜＝	$S_1 \leqq S_2$	$S_1 > S_2$
238	AND＞＝	**D**AND＞＝	$S_1 \geqq S_2$	$S_1 < S_2$

Example

- When X0=On and the current value of C10 is also equal to K200, Y10=On.
- When X1=Off and the content of register D0 is not equal to K-10, Y11=On and remains in that state.
- When X2 =On and the content of the 32-bit register D0 (D11) is less than 678,493, or M3=On, M50=On.

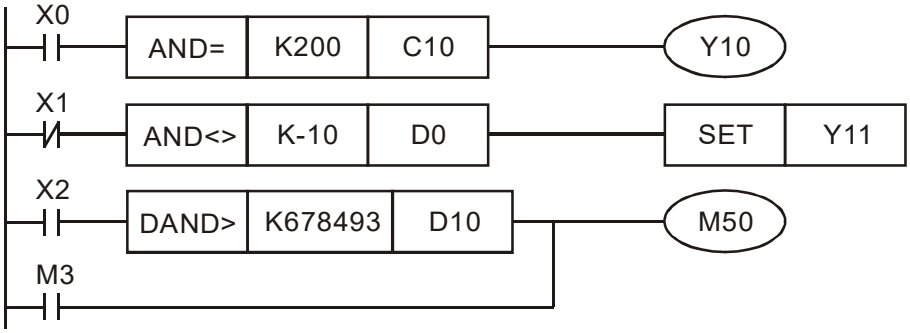

API 240–246	D	OR※		(S1) (S2)	Contact form compare OR*

	Bit device			Word device							
	X	Y	M	K	H	KnX	KnY	KnM	T	C	D
S1				*	*	*	*	*	*	*	*
S2				*	*	*	*	*	*	*	*

Notes on operand usage: ※ : = 、 > 、 < 、 <> 、 ≦ 、 ≧
Please refer to the function specifications table for each device in series for the scope of device usage

16-bit command (5 STEP)			
OR※	Continuous execution type	—	—

32-bit command (9 STEP)			
DOR※	Continuous execution type	—	—

Flag signal: none

Explanation

- **S_1**: data source device 1. **S_2**: data source device 2.
- This command compares the content of **S_1** and **S_2**. Taking API 240 (OR=) as an example, when the result of comparison is equal, this command will be activated; when the result of comparison is unequal, this command will not be activated.
- The OR* command is a compare command in parallel with a contact.

API No.	16-bit commands	32-bit commands	Conditions for activation	Conditions for inactivation
240	OR＝	**D**OR＝	$S_1 = S_2$	$S_1 \neq S_2$
241	OR＞	**D**OR＞	$S_1 > S_2$	$S_1 \leqq S_2$
242	OR＜	**D**OR＜	$S_1 < S_2$	$S_1 \geqq S_2$
244	OR＜＞	**D**OR＜＞	$S_1 \neq S_2$	$S_1 = S_2$
245	OR＜＝	**D**OR＜＝	$S_1 \leqq S_2$	$S_1 > S_2$
246	OR＞＝	**D**OR＞＝	$S_1 \geqq S_2$	$S_1 < S_2$

Example

- When X0=On and the current value of C10 is also equal to K200, Y10=On.
- When X1=Off and the content of register D0 is not equal to K-10, Y11=On and remains in that state.
- When X2 =On and the content of the 32-bit register D0 (D11) is less than 678,493, or M3=On, M50=On.

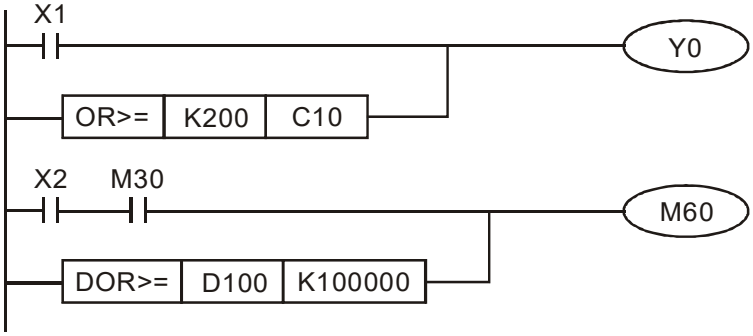

API 275–280	FLD※	(S1) (S2)	Floating point number contact form compare LD*

	Bit device			Word device							
	X	Y	M	K	H	KnX	KnY	KnM	T	C	D
S1									*	*	*
S2									*	*	*

Notes on operand usage: #：&、|、^
Please refer to the function specifications table for each device in series for the scope of device usage

16-bit command

–	–	–	–

32-bit command (9 STEP)

FLD※	Continuous execution type	–	–

Flag signal: none

Explanation

- **S_1**: data source device 1. **S_2**: data source device 2.
- This command compares the content of **S_1** and **S_2**. Taking "FLD=" as an example, if the result of comparison is "equal," this command will be activated; but it will not be activated when the result is "unequal."
- The FLD* command can directly input floating point numerical values (for instance: F1.2) to the **S_1**, **S_2** operands, or store floating-point numbers in register D for use in operations.
- This command can be used while directly connected with the busbar

API No.	32-bit commands	Conditions for activation	Conditions for inactivation
275	FLD＝	$S_1 = S_2$	$S_1 \neq S_2$
276	FLD＞	$S_1 > S_2$	$S_1 \leqq S_2$
277	FLD＜	$S_1 < S_2$	$S_1 \geqq S_2$
278	FLD＜＞	$S_1 \neq S_2$	$S_1 = S_2$
279	FLD＜＝	$S_1 \leqq S_2$	$S_1 > S_2$
280	FLD＞＝	$S_1 \geqq S_2$	$S_1 < S_2$

Example

- When the floating point number of register D200 (D201) is less than or equal to F1.2, and X1 activated, contact Y21 will be activated and remain in that state.

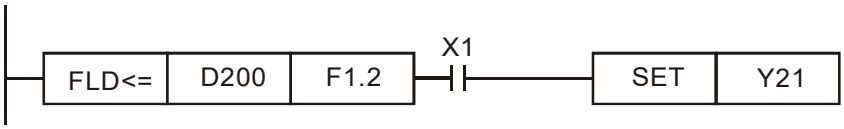

API 281–286		FAND※		(S1) (S2)	Floating point number contact form compare AND*

	Bit device			Word device							
	X	Y	M	K	H	KnX	KnY	KnM	T	C	D
S1									*	*	*
S2									*	*	*

Notes on operand usage: # ：& 、| 、^
Please refer to the function specifications table for each device in series for the scope of device usage

16-bit command			
–	–	–	–

32-bit command (9 STEP)			
FAND※	Continuous execution type	–	–

Flag signal: none

Explanation

- **S_1**: data source device 1. **S_2**: data source device 2.
- This command compares the content of **S_1** and **S_2**. Taking "FAND=" as an example, if the result of comparison is "equal," this command will be activated; but it will not be activated when the result is "unequal."
- The FAND* command can directly input floating point numerical values (for instance: F1.2) to the **S_1**, **S_2** operands, or store floating-point numbers in register D for use in operations.
- This command can be used while directly connected with the busbar

API No.	32-bit commands	Conditions for activation	Conditions for inactivation
281	FAND=	$S_1 = S_2$	$S_1 \neq S_2$
282	FAND＞	$S_1 > S_2$	$S_1 \leqq S_2$
283	FAND＜	$S_1 < S_2$	$S_1 \geqq S_2$
284	FAND＜＞	$S_1 \neq S_2$	$S_1 = S_2$
285	FAND＜＝	$S_1 \leqq S_2$	$S_1 > S_2$
286	FAND＞＝	$S_1 \geqq S_2$	$S_1 < S_2$

Example

- When X1=Off, and the floating point number in register D100 (D101) is not equal to F1.2, Y21=On and remains in that state.

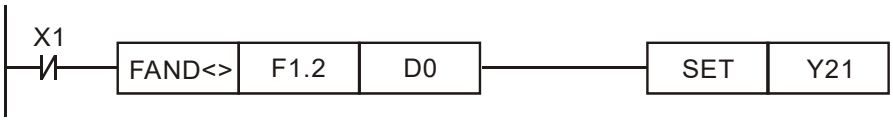

API 287–292		FOR※		(S1) (S2)	Floating point number contact form compare OR*

	Bit device			Word device							
	X	Y	M	K	H	KnX	KnY	KnM	T	C	D
S1									*	*	*
S2									*	*	*

Notes on operand usage: # ：& 、| 、^
Please refer to the function specifications table for each device in series for the scope of device usage

16-bit command			
–	–	–	–

32-bit command (9 STEP)			
FOR※	Continuous execution type	–	–

Flag signal: none

Explanation

- **S_1**: data source device 1. **S_2**: data source device 2.
- This command compares the content of **S_1** and **S_2**. Taking "FOR=" as an example, if the result of comparison is "equal," this command will be activated; but it will not be activated when the result is "unequal."
- The FOR* command can directly input floating point numerical values (for instance: F1.2) to the **S_1**, **S_2** operands, or store floating-point numbers in register D for use in operations.
- This command can be used while directly connected with the busbar

API No.	32-bit commands	Conditions for activation	Conditions for inactivation
287	FOR＝	$S_1 = S_2$	$S_1 \neq S_2$
288	FOR＞	$S_1 > S_2$	$S_1 \leqq S_2$
289	FOR＜	$S_1 < S_2$	$S_1 \geqq S_2$
290	FOR＜＞	$S_1 \neq S_2$	$S_1 = S_2$
291	FOR＜＝	$S_1 \leqq S_2$	$S_1 > S_2$
292	FOR＞＝	$S_1 \geqq S_2$	$S_1 < S_2$

Example

- When X2 and M30 are both equal to "On," or the floating point number in register D100 (D101) is greater than or equal to F1.234, M60=On.

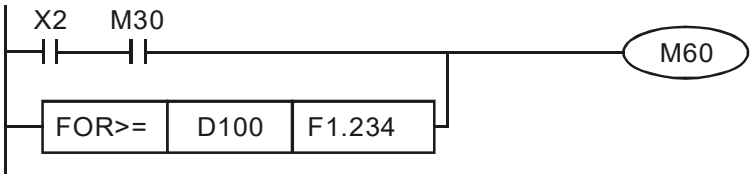

16-6-5 Detailed explanation of drive special applications commands

API 139	RPR	P	(S1) (S2)	Read servo parameter

	Bit device			Word device							
	X	Y	M	K	H	KnX	KnY	KnM	T	C	D
S1				*	*						*
S2											*

Notes on operand usage: none

16-bit command (5 STEP)

RPR	Continuous execution type	RPRP	Pulse execution type

32-bit command

—	—	—	—

Flag signal: none

Explanation

■ (S1): Parameter address of data to be read. (S2): Register where data to be read is stored.

API 140	WPR	P	(S1) (S2)	Write servo parameter

	Bit device			Word device							
	X	Y	M	K	H	KnX	KnY	KnM	T	C	D
S1				*	*						*
S2				*	*						*

Notes on operand usage: none

16-bit command (5 STEP)

WPR	Continuous execution type	WPRP	Pulse execution type

32-bit command

—	—	—	—

Flag signal: none

Explanation

■ (S1): Data to write to specified page. (S2): Parameter address of data to be written.

Example

■ When the data in the C2000 Plus drive's parameter H01.00 is read and written to D0, data from H01.01 will be read and written to D1.

■ When M0=On, the content of D10 will be written to the C2000 Plus drive parameter 04.00 (first speed of multiple speed levels).

■ When the parameter has been written successfully, M1017=On.

■ The C2000 Plus's WPR command does not support writing to the 20XX address, but the RPR command supports reading of 21XX, 22XX.

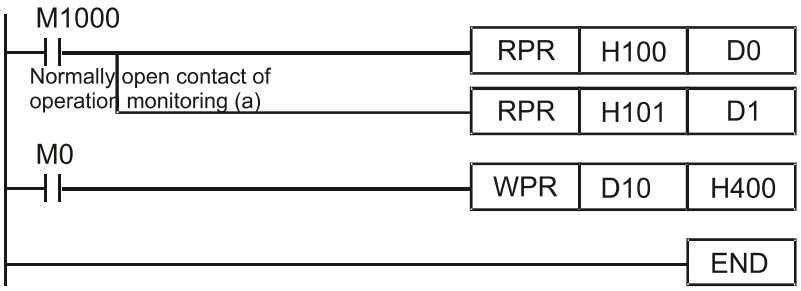

Recommendation

Take care when using the WPR command. When writing parameters, because most parameters are recorded as they are written, these parameters may only be revised 109 times; a memory write error may occur if parameters are written more than 10^9 times.

Because the following commonly-used parameters have special processing, there are **no** restrictions on the number of times they may be written.

Pr. 00-10: Control method

Pr. 00-11: Speed mode selection

Pr. 00-12: P2P position mode

Pr. 00-13: Torque mode select

Pr. 00-27: User-defined value

Pr. 01-12: Acceleration time 1

Pr. 01-13: Deceleration time 1

Pr. 01-14: Acceleration time 2

Pr. 01-15: Deceleration time 2

Pr. 01-16: Acceleration time 3

Pr. 01-17: Deceleration time 3

Pr. 01-18: Acceleration time 4

Pr. 01-19: Deceleration time 4

Pr. 02-12: Select MI Conversion Time mode:

Pr. 02-18: Select MO Conversion Time mode:

Pr. 04-50–Pr. 04-69: PLC register parameter 0 - 19

Pr. 08-04: Upper limit of integral

Pr. 08-05: PID output upper limit

Pr. 10-17: Electronic gear A

Pr. 10-18: Electronic gear B

Pr. 11-34: Torque command

Pr. 11-43: P2P highest frequency

Pr. 11-44: Position control acceleration time

Pr. 11-45: Position control deceleration time

Calculation of the number of times written is based on whether the written value is modified. For instance, writing the same value 100 times at the same time counts as writing only once.

When writing a PLC program, if unsure of usage of the WPR command, we recommend that you use the WPRP command.

API 141		FPID	P	(S1) (S2) (S3) (S4)	Drive PID control mode

	Bit device			Word device							
	X	Y	M	K	H	KnX	KnY	KnM	T	C	D
S1				*	*						*
S2				*	*						*
S3				*	*						*
S4				*	*						*

Notes on operand usage: none

16-bit command (9 STEP)			
FPID	Continuous execution type	FPIDP	Pulse execution type
32-bit command			
—	—	—	—

Flag signal: none

Explanation

- (S1): PID reference target value input terminal select. (S2): PID function proportional gain P. (S3): PID function integral time I. (S4): PID function differential time D.
- The FPID command can directly control the drive's feedback control of PID Pr. 08-00 PID reference target value input terminal selection, Pr. 08-01 proposal gain P, Pr. 08-02 integral time I, and Pr. 08-03 differential time D.

Example

- When M0=On, the set PID reference target value input terminal selection is 0 (no PID function), the PID function proportional gain P is 0, the PID function integral time I is 1 (units: 0.01 sec.), and the PID function differential time D is 1 (units: 0.01 sec.).
- When M1=On, the set PID reference target value input terminal selection is 0 (no PID function), the PID function proportional gain P is 1 (units: 0.01), the PID function integral time I is 0, and the PID function differential time D is 0.
- When M2=On, the set PID reference target value input terminal selection is 1 (target frequency input is controlled from the digital keypad), the PID function proportional gain P is 1 (units: 0.01), the PID function integral time I is 0, and the PID function differential time D is 0.
- D1027: Frequency command after PID operation.

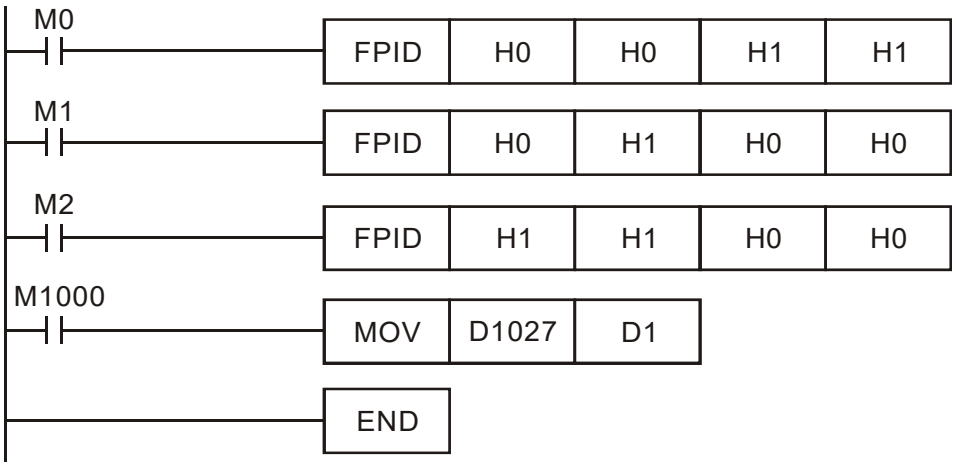

API 142	FREQ	P	(S1) (S2) (S3)	Drive speed control mode

	Bit device			Word device							
	X	Y	M	K	H	KnX	KnY	KnM	T	C	D
S1				*	*						*
S2				*	*						*
S3				*	*						*

Notes on operand usage: none

16-bit command (7 STEP)			
FREQ	Continuous execution type	FREQP	Pulse execution type
32-bit command			
—	—	—	—

Flag signal: M1015

Explanation

- (S1): Frequency command. (S2): Acceleration time. (S3): Deceleration time
- S2,S3: In acceleration/deceleration time settings, the number of decimal places is determined by the definitions of Pr. 01-45.

Example
When Pr. 01-45=0: units of 0.01 sec.
The setting of 50 for S2 (acceleration time) in the ladder diagram below implies 0.5 sec, and the S3 (deceleration time) setting of 60 implies 0.6 sec

- The FREQ command can control drive frequency commands, and acceleration and deceleration time; it also uses special register control actions, such as:
  M1025: Control drive RUN(On) / STOP(Off) (RUN requires Servo On (M1040 On) to be effective)
  M1026: Control drive operating direction FWD(Off) / REV(On)
  M1040: Control Servo On / Servo Off.
  M1042: Trigger quick stop (ON) / does not trigger quick stop (Off).
  M1044: Pause (On) / release pause (Off)
  M1052: Lock frequency (On) / release lock frequency (Off)

Example

- M1025: Drive RUN(On) / STOP(Off), M1026: drive operating direction FWD(Off) / REV(On). M1015: frequency reached.
- When M10=On, sets the drive frequency command K300 (3.00Hz), with an acceleration / deceleration time of 0.
  When M11=On, sets the drive frequency command K3000 (30.00Hz), with an acceleration time of 50 (0.5 sec.) and deceleration time of 60 (0.6 sec.). (When Pr. 01-45=0)
- When M11=Off, the drive frequency command will now change to 0

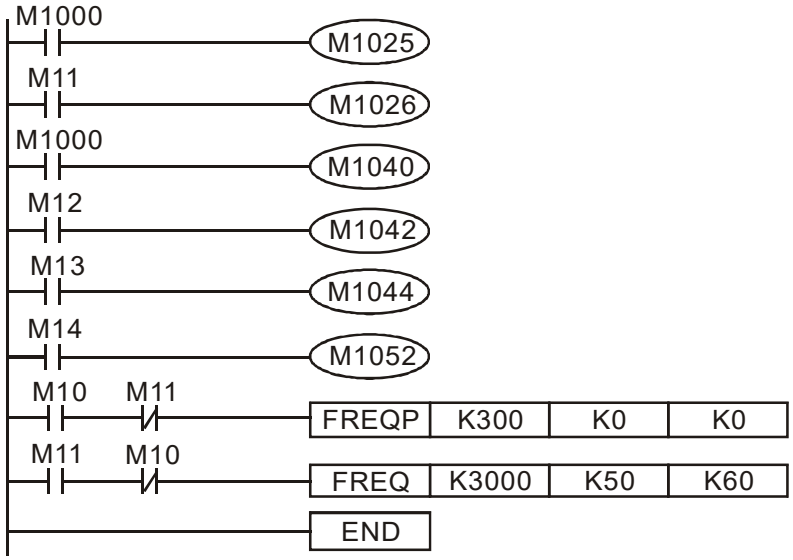

- Pr. 09-33 are defined on the basis of whether reference commands have been cleared before PLC operation.
  bit0: Prior to PLC scanning procedures, whether the target frequency has been cleared is 0. (This will be written to the FREQ command when the PLC is On)
  bit1: Prior to PLC scanning procedures, whether the target torque has been cleared is 0. (This will be written to the TORQ command when the PLC is On)
  bit2: Prior to PLC scanning procedures, whether speed limits in the torque mode have been cleared is 0. (This will be written to the TORQ command when the PLC is On)

Example: When using r to write a program

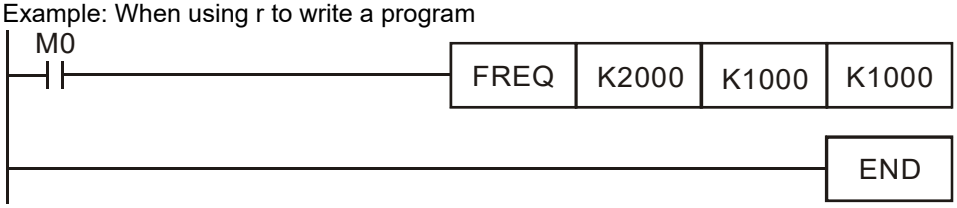

If we force M0 to be 1, the frequency command will be 20.00Hz; but when M0 is set as 0, there will be a different situation.

Case 1: When the Pr.09-33 bit 0 is 0, and M0 is set as 0, the frequency command will remain at 20.00Hz.

Case 2: When the Pr.09-33 bit 0 is 1, and M0 is set as 0, the frequency command will change to 0.00Hz.

The reason for this is that when the Pr.09-33 bit 0 is 1 prior to PLC scanning procedures, the frequency will first revert to 0.

When the Pr.09-33 bit 0 is 0, the frequency will not revert to 0.

API 263	TORQ	P	(S1) (S2)	Drive torque control mode

	Bit device			Word device							
	X	Y	M	K	H	KnX	KnY	KnM	T	C	D
S1				*	*						*
S2				*	*						*

Notes on operand usage: none

16-bit command (5 STEP)			
TORQ	Continuous execution type	TORQ P	Pulse execution type
32-bit command			
—	—	—	—

Flag signal: M1063

Explanation

- (S1): Torque command (numbered, no more than one digit). (S2): Speed limit.
- The TORQ command can control the drive torque command and speed limits; it also uses special register control actions, such as:
  M1040: Controls Servo On/Servo Off. When Servo is ON, if a TORQ command is executed, the torque will output the torque defined by the TORQ command, and the frequency restrictions will similarly be controlled by the TORQ command.

Example

- M1040: Control Servo On/Servo Off. M1063: set torque attained. D1060 is the mode controls. D1053 is the actual torque.
- When M0=Off, set the drive torque command K+500 (+50.0%), rotational speed restrictions is 3000 (30Hz).
- When M0=On, sets the drive torque command K-300 (-30.0%), rotational speed restrictions is 3000 (30Hz).
- When M10=On, drive began output torque command.
- When set torque is attained, M1063 will go On; this flag usually jumps continuously, however.

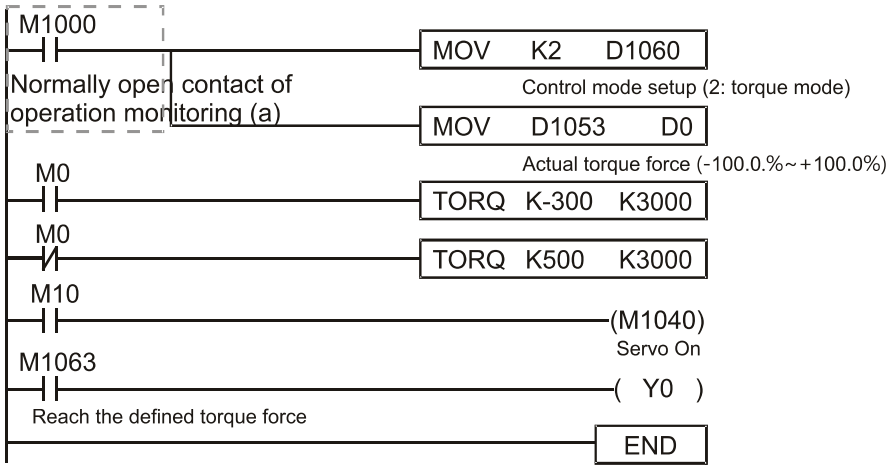

- Pr. 09-33 are defined on the basis of whether reference commands have been cleared before PLC operation.
  bit0: Prior to PLC scanning procedures, whether the target frequency has been cleared is 0. (This will be written to the FREQ command when the PLC is On)
  bit1: Prior to PLC scanning procedures, whether the target torque has been cleared is 0. (This will be written to the TORQ command when the PLC is On)
  bit2: Prior to PLC scanning procedures, whether speed limits in the torque mode have been cleared is 0. (This will be written to the TORQ command when the PLC is On)

Example:

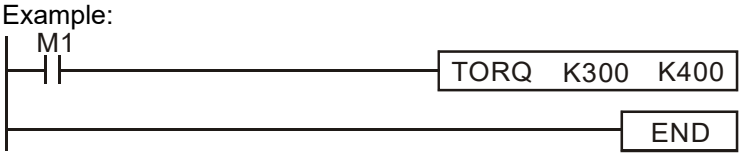

If we now force M1 to be 1, the torque command will be K+300 (+30%), and the speed limit will be 400 (40Hz). But when M1 is set as 0, there will be a different situation.
Case 1: When bit 1 and bit 2 of Pr. 09-33 are both set as 0, and M1 is set as 0, the torque command will remain at +30%, and the speed limit will be set as 40Hz.
Case 2: When bit 2 of Pr. 09-33 are both 1, and M1 is set as 0, the torque command will revert 0%, and the speed limit will be set as 0Hz.

API 262		DPOS	P	(S1)	Drive point-to-point control

	Bit device			Word device							
	X	Y	M	K	H	KnX	KnY	KnM	T	C	D
				*	*						*

Notes on operand usage: none

16-bit command

—	—	—	—

32-bit command (5 STEP)

DPOS	Continuous execution type	DPOSP	Pulse execution type

Flag signal: M1064, M1070

Explanation

- (S1): Target (must have a number).
- The DPOS command can control the drive's position commands, and employs special register control actions, such as:
  M1040: Control Servo On/Servo Off. M1055 search for origin. M1048 move to new position. If the control mode is position mode (D1060 = 1), and the converter is in the Servo ON state (M1040 = 1), if the DPOS command is executed, the drive will move to a new position in conjunction with activation of M1048 once (OFF to ON).

Example

- M1040: Control Servo On/Servo Off. M1064: set position attained. D1060 is the mode control. D1051(L) and D1052(H) are the actual position points.
- When X0=On, M1040 will be On (Servo On).
- When X1=On, sets DPOS position as +300000, and M1048 will change to On (move to new position) after a delay of 1 sec. Check whether the value of D1051 has changed at this time; after the set position point has been reached, M1064 will go On, and Y0 will output On.

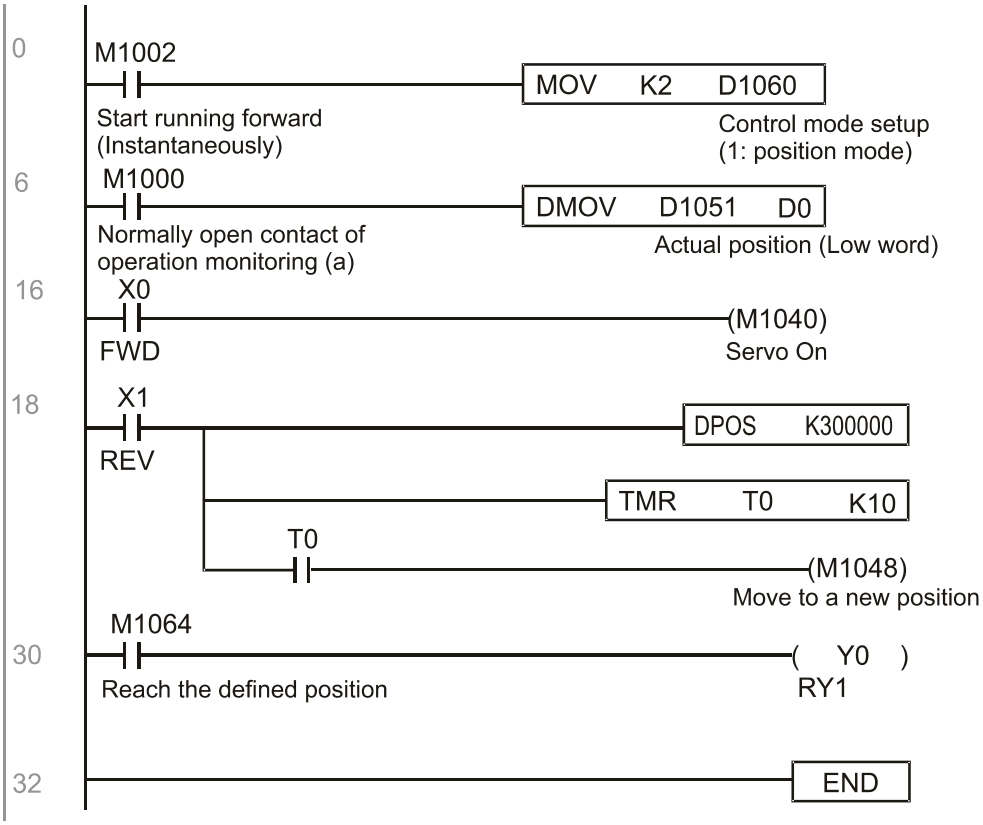

API 261	CANRX	P	(S1) (S2) (S3) (D)	Read CANopen slave station data

	Bit device			Word device							
	X	Y	M	K	H	KnX	KnY	KnM	T	C	D
S1				*	*						
S2				*	*						
S3				*	*						
D									*	*	*

Notes on operand usage: none

16-bit command (9 STEP)			
CANRX	Continuous execution type	CANRX P	Pulse execution type
32-bit command			
—	—	—	—

Flag signal

Explanation

- (S1): Slave station number. (S2): Main index.. (S3): Subindex+bit length. (D): Preset address.
- The CANRX command can read the index of the corresponding slave station. When it is executed, it will send the SDO message format to the slave station. M1066 and M1067 will both be 0 at that time, and M1066 will be set as 1 after reading. If the slave station gives the correct response, it will write the value to the preset register, and set M1067 as 1. If the slave station has a response error, M1067 will be set as 0, and an error message will be recorded to D1076 to D1079.

Example

M1002: When the PLC runs, the command will be triggered once and will set K4M400 = K1

Afterwards, each time M1066 is 1, it will switch to a different message.

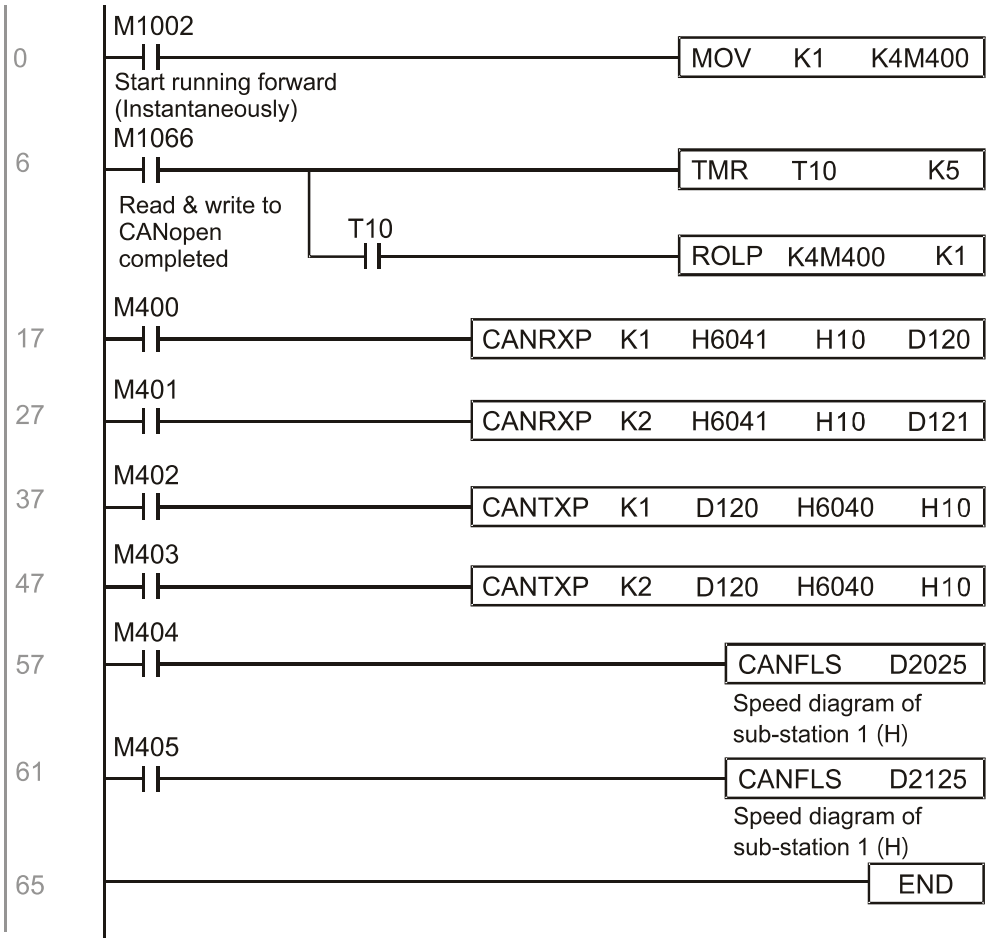

API 264		CANTX	P	(S1) (S2) (S3) (S4)	Write CANopen slave station data

	Bit device			Word device							
	X	Y	M	K	H	KnX	KnY	KnM	T	C	D
S1				*	*						
S2				*	*				*	*	*
S3				*	*						
S4				*	*						

Notes on operand usage: none

16-bit command (9 STEP)			
CANTX	Continuous execution type	CANTXP	Pulse execution type
32-bit command			
—	—	—	—

Flag signal

Explanation

- (S1): Slave station number. (S2): Address to be written. (S3): Main index. (S4): Subindex+bit length.
- The CANTX command can write a value to the index of the corresponding slave station. When it is executed, it will send the SDO message format to the slave station. M1066 and M1067 will both be 0 at that time, and M1066 will be set as 1 after reading. If the slave station gives the correct response, it will write the value to the preset register, and set M1067 as 1. If the slave station has a response error, M1067 will be set as 0, and an error message will be recorded to D1076 to D1079.

API 265		CANFLS	P	(D)	Refresh special D corresponding to CANopen

	Bit device			Word device							
	X	Y	M	K	H	KnX	KnY	KnM	T	C	D
D				*	*						

Notes on operand usage: none

16-bit command (3 STEP)

CANFLS	Continuous execution type	CANFLSP	Pulse execution type

32-bit command

—	—	—	—

Flag signal

Explanation

- (D): Special D to be refreshed.
- The CANFLS command can refresh special D commands. When is a read only attribute, executing this command will send a message equivalent to that of CANRX to the slave station, and the number of the slave station will be transmitted back and refreshed to this special D. When there is a read/write attribute, executing this command will send a message equivalent to that of CANTX to the slave station, and the value of this special D will be written to the corresponding slave station.
- When M1066 and M1067 are both 0, and M1066 is set as 1 after reading, if the slave station gives a correct response, the value will be written to the designated register, and M1067 will be set as 1. If the slave station's response contains an error, then M1067 will be set as 0, and an error message will be recorded to D1076–D1079.

API 320	D	ICOMR	P	(S1) (S2) (S3) (D)	Internal communications read

	Bit device			Word device							
	X	Y	M	K	H	KnX	KnY	KnM	T	C	D
S1				*	*						*
S2				*	*						*
S3				*	*						*
D				*	*						*

Notes on operand usage: none

16-bit command (9 STEP)

ICOMR	Continuous execution type	ICOMRP	Pulse execution type

32-bit command (17 STEP)

DICOMR	Continuous execution type	DICOMRP	Pulse execution type

Flag signal: M1077 M1078 M1079

Explanation

(S1): Selection of slave device. (S2): Device selection (0: converter, 1: internal PLC). (S3): Read address. (D): Saving target.

- The ICOMR command can obtain the slave station's converter and the internal PLC's register value.

API 321	D	ICOMW	P	(S1) (S2) (S3) (D)	Internal communications write

	Bit device			Word device							
	X	Y	M	K	H	KnX	KnY	KnM	T	C	D
S1				*	*						*
S2				*	*						*
S3				*	*						*
D				*	*						*

Notes on operand usage: none

16-bit command (9 STEP)

ICOMW	Continuous execution type	ICOMWP	Pulse execution type

32-bit command (17 STEP)

DICOMW	Continuous execution type	DICOMWP	Pulse execution type

Flag signal: M1077 M1078 M1079

Explanation

(S1): Selection of slave device. (S2): Device selection (0: converter, 1: internal PLC). (S3): Read address. (D): Saving target.

- The ICOMW command write a value to the slave station's converter and the internal PLC's register.

Example

Please refer to the following example:

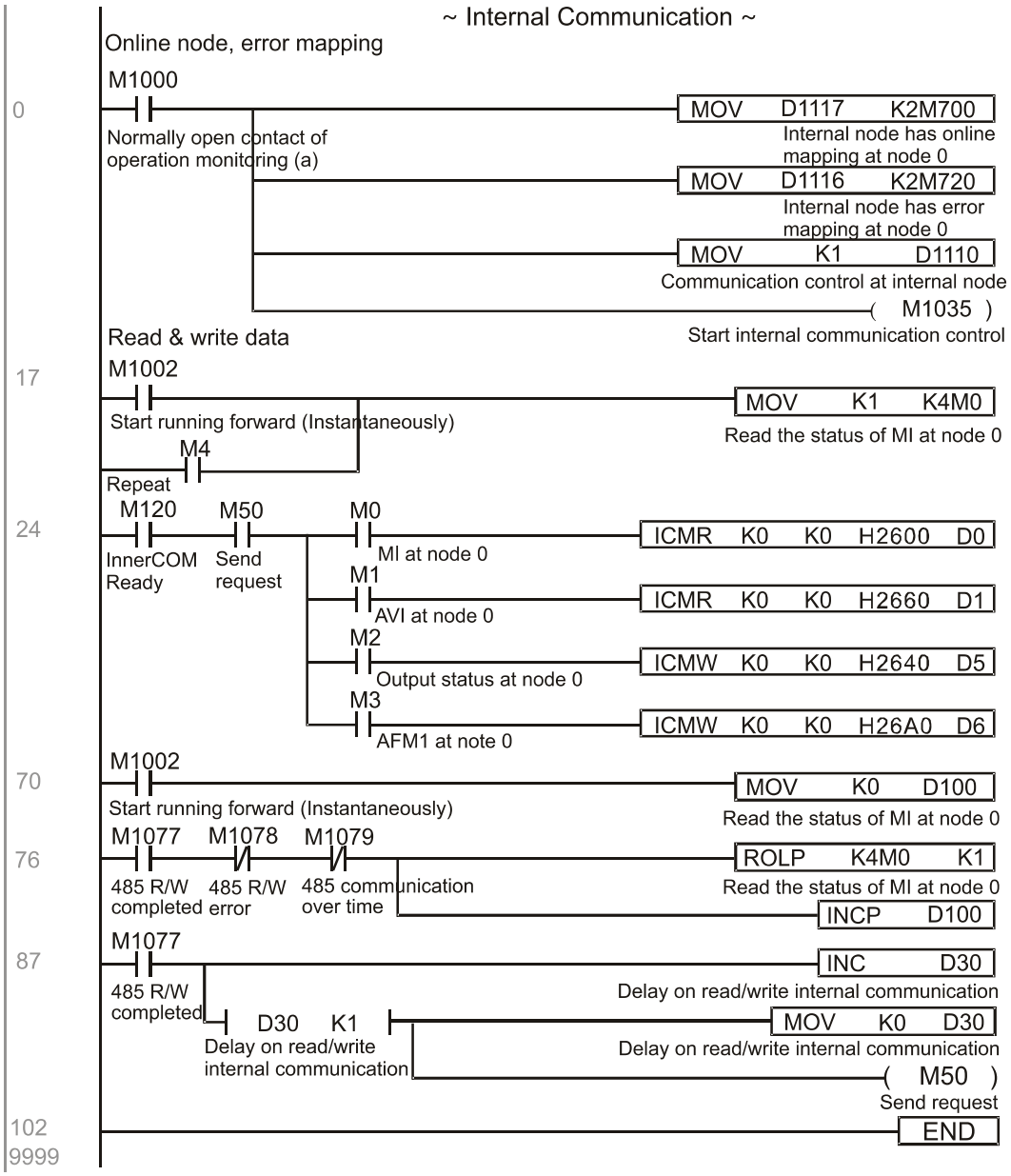

API 323		WPRA	P	(S1) (S2)	Drive parameters write-in

	Bit device			Word device							
	X	Y	M	K	H	KnX	KnY	KnM	T	C	D
S1				*	*						*
S2				*	*						*

Notes on operand usage: none

16-bit command (5 STEP)			
WORA	Continuous execution type	WORAP	Pulse execution type

32-bit command			
-	-	-	-

Flag signal: none

Explanation

(S1): Data that is going to write in (S2): Parameter address of the write-in data

Example

- Read the data of C2000 Plus drive's parameter H01.00 and write into D0, read data of H01.01 and write into D1.
- When M0 is ON, write the content of D10 into C2000 Plus drive's Pr.04-00 (1st step speed frequency).
- When parameter writes-in successfully, M1017 is ON.
- The WPR command does not support the write-in of 20XX address, but the RPR command supports the read-out of 21XX and 22XX.

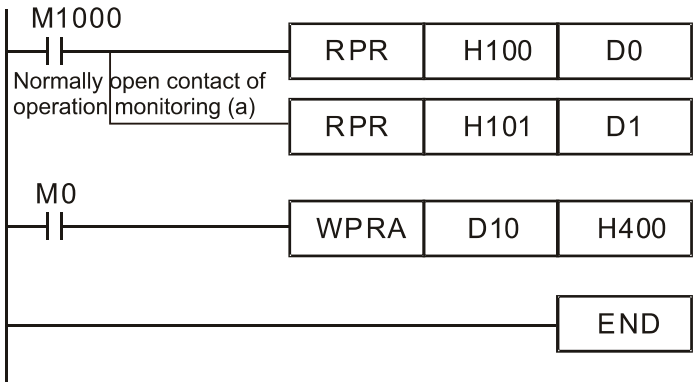

Recommendation

- When WPRA executes, the data is only written into the RAM area, and will get back to previous record when the power is off.

16-7 Error display and handling

Code	ID	Descript	Recommended handling approach
PLrA	47	RTC time check	Turn power on and off when resetting the keypad time
PLrt	49	Incorrect RTC time	Turn power on and off after making sure that the keypad is securely connected
PLod	50	Data writing memory error	Check whether the program has an error and download the program again
PLSv	51	Data write memory error during program execution	Restart power and download the program again
PLdA	52	Program transmission error	Try uploading again; if the error persists, sent to the manufacturer for service
PLFn	53	Command error while downloading program	Check whether the program has an error and download the program again
PLor	54	Program exceeds memory capacity or no program	Restart power and download the program again
PLFF	55	Command error during program execution	Check whether the program has an error and download the program again
PLSn	56	Check code error	Check whether the program has an error and download the program again
PLEd	57	Program has no END stop command	Check whether the program has an error and download the program again
PLCr	58	MC command has been used continuously more than nine times	Check whether the program has an error and download the program again
PLdF	59	Download program error	Check whether the program has an error and download again
PLSF	60	PLC scan time excessively long	Check whether the program code has a writing error and download again

16- 8 CANopen Master control applications

Control of a simple multi-axis application is required in certain situations. If the device supports the CANopen protocol, a C2000 Plus can serve as the master in implementing simple control (position, speed, homing, and torque control). The setting method comprises the following seven steps:

Step 1: Activating CANopen Master functions

1. Pr. 09-45=1 (initiates Master functions); restart power after completing setting, the status bar on the KPC-CC01 digital keypad will display "CAN Master".
2. Pr. 00-02=6 reset PLC (please note that this action will reset the program and PLC registers to the default values)
3. Turn power off and on again.
4. Use the KPC-CC01 digital keypad to set the PLC control mode as **"PLC Stop"** (if a newly-introduced drive is used, the blank internal PLC program will cause a PLFF warning code to be issued).

Step 2: Master memory settings

1. After connecting the 485 communications cable, use WPL Soft to set the PLC **status** as Stop (if the PLC mode has been switched to the **"PLC Stop"** mode, the PLC **status** should already be Stop)
2. Set the address and corresponding station number of the slave station to be controlled. For instance, if it is wished to control two slave stations (a maximum of 8 stations can be controlled simultaneously), and the station numbers are 21 and 22, it is only necessary to set D2000 and D2100 as 20 and 21, and then set D2200, D2300, D2400, D2500, D2600, and D2700 as 0. The setting method involves use of the PLC's WPL editing software WPL as follows:
   - Open WPL and implement **communications > register edit (T C D)** function

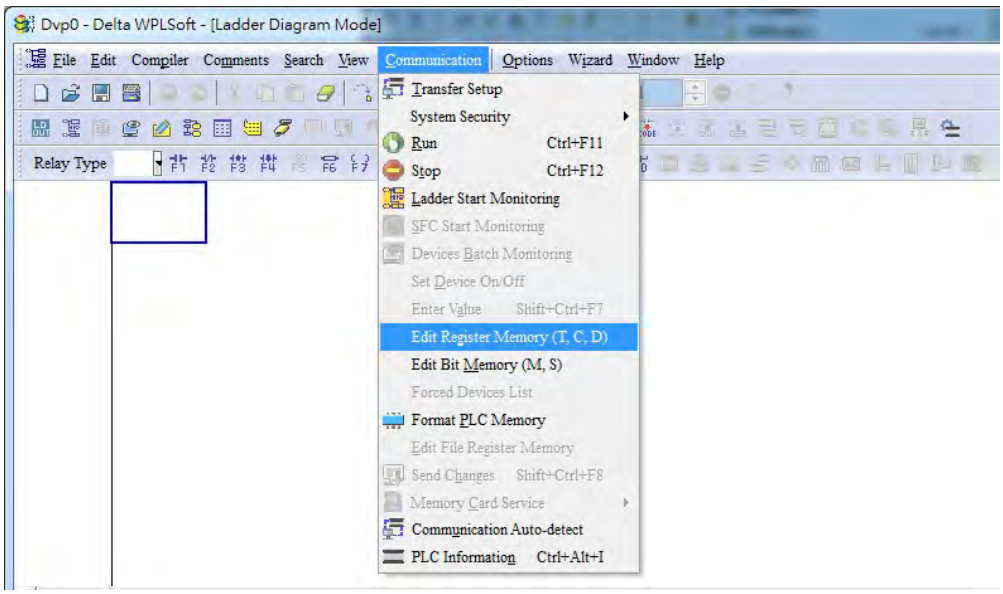

- After leaving the PLC register window, the register setting screen will appear, as shown below:

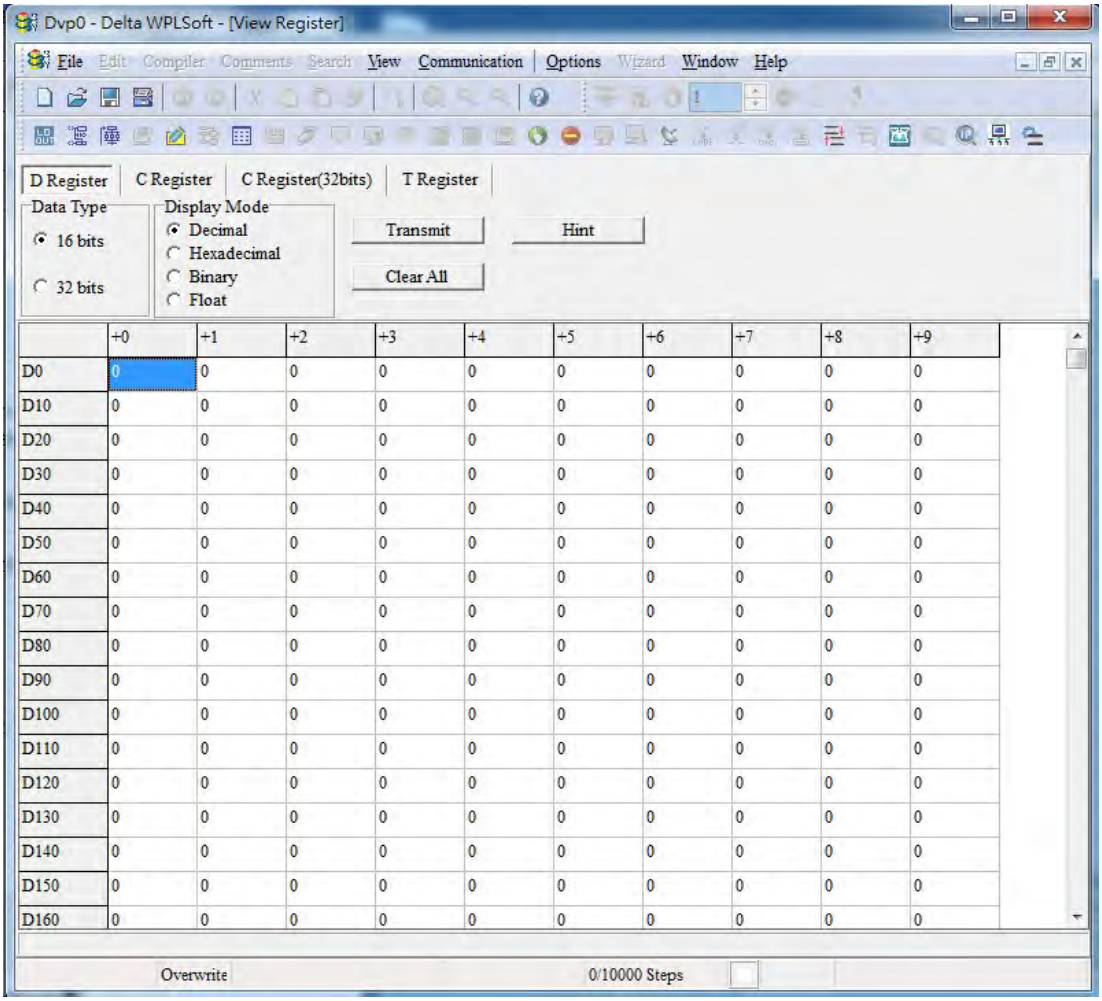

If there is a new PLC program and no settings have been made yet, you can read default data from the converter, and merely edit it to suit the current application.

If settings have already been made, however, the special D in the CANopen area will display the saved status (the CANopen D area is located at D1090 to D1099 and D2000 to D2799). Assuming it is a new program, we will first read the default data from the converter; check the communications format if there is no communications link (the default PLC station number is 2, 9600, 7N2, ASCII). Perform the following steps:

1. Switch the PLC to Stop status
2. Press the transmit button
3. Click on read memory after exiting the window
4. Ignore D0–D399
5. Click on the confirm button.

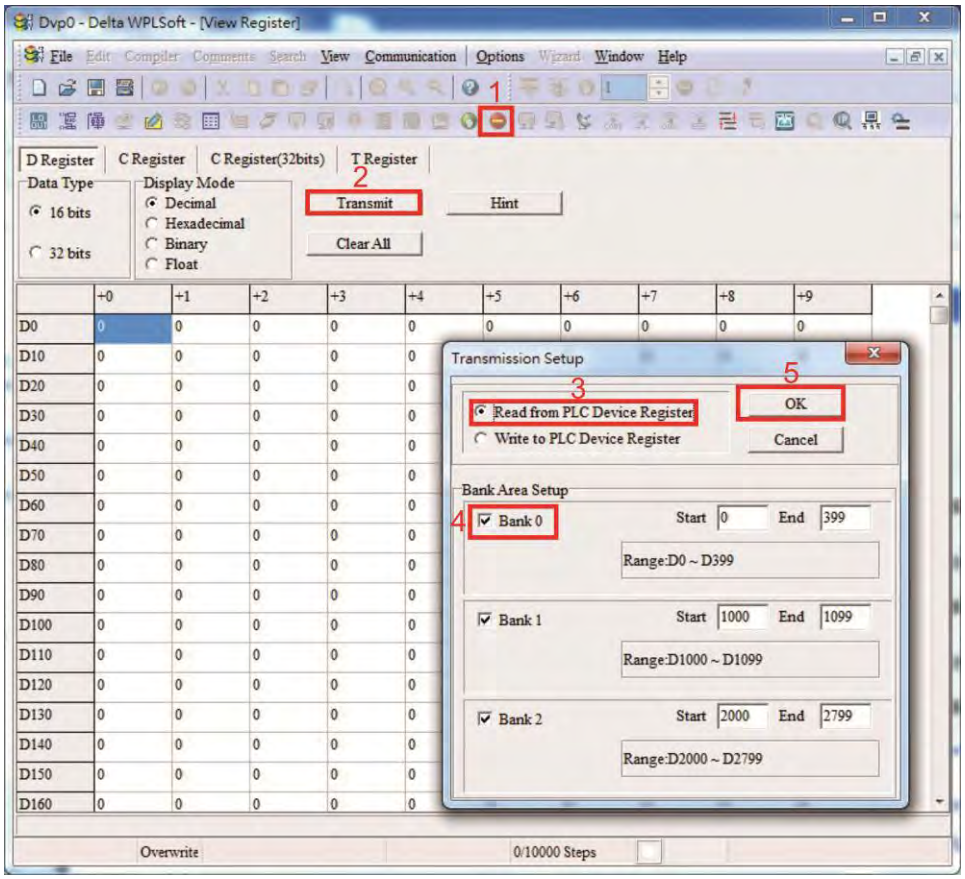

After reading the data, it is necessary to perform some special D settings. Before proceeding, we will first introduce the special D implications and setting range.

The CANopen Master's special D range is currently D1070 to D1099 and D2000 to D2799; this range is divided into 3 blocks:

- The first block is used to display CANopen's current status, and has a range of D1070–D1089
- The second block is used for CANopen's basic settings, and has a range of D1090–D1099
- The third block is the slave station mapping and control area, and has a range of D2000–D2799.

These areas are therefore introduced as follows:

The first contains the current CANopen status display:

When the master initializes a slave station, we can find out from D1070 whether configuration of the slave device has been completed; we can find out whether an error occurred in the configuration process from D1071 and whether the configuration is inappropriate from D1074.

After entering normal control, we can find out whether the slave device is offline from D1073. In addition, we can check the slave device's read/write information using the CANRX, CANTX, and CANFLS commands; error information can be obtained from D1076 to D1079 if there has been a read/write failure.

Special D	Description of Function	R/W
D1070	Channel opened by CANopen initialization (bit0=Machine code0 …….)	R
D1071	Error channel occurring in CANopen initialization process (bit0=Machine code0 …….)	R
D1072	Reserved	-

Special D	Description of Function	R/W
D1073	CANopen break channel (bit0=Machine code0 …….)	R
D1074	Error code of master error 0: No error 1: Slave station setting error 2: Synchronizing cycle setting error (too small)	R
D1075	Reserved	-
D1076	SDO error message (main index value)	R
D1077	SDO error message (secondary index value)	R
D1078	SDO error message (error code L)	R
D1079	SDO error message (error code H)	R

The second area is for basic CANopen settings: (the PLC must have **stopped** when this area is used to make settings)

We must set the information exchange time for the master and slave station,

Special D	Description of Function	Default:	R/W
D1090	Synchronizing cycle setting	4	RW

Use D1090 to perform settings; setting time relationships include:

$$\text{Sync time} \geq \frac{1M}{\text{Rate}} * \frac{N}{4}$$

N: TXPDO + RXPDO

For instance, when communications speed is 500K, TXPDO + RXPDO have 8 sets, and synchronizing time will require more than 4 ms

We must also define how many slave stations will be opened. D1091 is the channel for defining station opening, and D2000+100*n is the station number defining this channel. See the detailed explanation below.

Slave station number **n**=0–7

Special D	Description of Function	R/W
D1091	Sets slave station On or Off (bit 0-bit 7 correspond to slave stations number 0-7)	RW
D2000+100***n**	Slave station number	RW

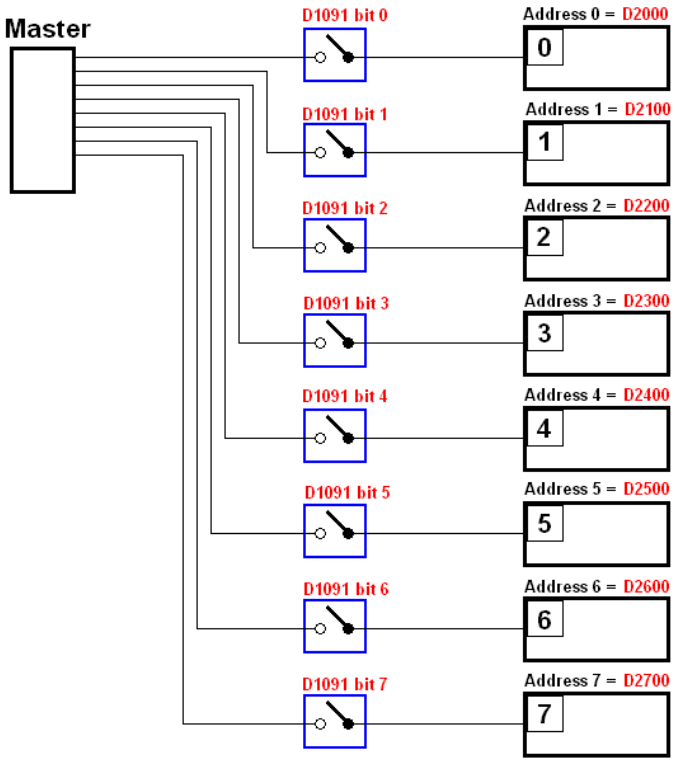

If slave devices have a slow start-up, the master can delay for a short time before performing slave station configuration; this time delay can be set via D1092.

Special D	Description of Function	Default	R/W
D1092	Delay before start of initialization	0	RW

With regard to slave device initialization, a delay time can be set to judge whether failure has occurred. If the communications speed is relatively slow, the delay time can be adjusted to judge whether initialization has been completed, which will ensure that there is time to perform slave device initialization.

Special D	Description of Function	Default	R/W
D1099	Initialization completion delay time Setting range: 1 to 60000 sec.	15 sec.	RW

After communication is successful, the system must detect whether there is a break in communications with the slave station. D1093 is used to set detection time, and D1094 sets the number of consecutive errors that will trigger a break error.

Special D	Description of Function	Default	R/W
D1093	Break time detection	1000ms	RW
D1094	Break number detection	3	RW

The packet type transmitted by PDO is set before establishing normal communications and generally does not require adjustment.

Special D	Description of Function	Default	R/W
D1097	Corresponding real-time transmission type (PDO) Setting range: 1–240	1	RW
D1098	Corresponding real-time receiving type (PDO) Setting range: 1–240	1	RW

The third block is the slave station mapping and control area.

CANopen provides a PDO method to perform mapping of the master and slave station memory, and enables the master to directly access read/write data in a certain memory area. The master will automatically perform data exchange with the corresponding slave device, and the read/write values can be seen directly from the special D area after real-time exchange (M1034 = 1 time) has been established. The C2000 Plus currently supports real-time mapping of four PDOs, and there are two types of PDO RXPDO (reads slave device information) and TXPDO (writes to slave device). In addition, in order to facilitate control, the C2000 Plus cannot perform mapping of commonly-used registers; the following is an overview of the current PDO mapping situation:

TXPDO							
PDO4 (Torque)		**PDO3 (Position)**		**PDO2 (Remote I/O)**		**PDO1 (Speed)**	
Description	Special D	Description	Special D	Description	Special D	Description	Special D
Controller word	D2008+100*n	Controller word	D2008+100*n	Slave device DO	D2027+100*n	Controller word	D2008+100*n
Target torque	D2017+100*n	Target position	D2020+100*n D2021+100*n	Slave device AO1	D2031+100*n	Target speed	D2012+100*n
Control method	D2010+100*n	Control method	D2010+100*n	Slave device AO2	D2032+100*n		
				Slave device AO3	D2033+100*n		

RXPDO							
PDO4 (Torque)		PDO3 (Position)		PDO2 (Remote I/O)		PDO1 (Speed)	
Description	Special D	Description	Special D	Description	Special D	Description	Special D
Mode word	D2009+100*n	Mode word	D2009+100*n	Slave device DI	D2026+100*n	Mode word	D2009+100*n
Actual torque	D2018+100*n	Actual position	D2022+100*n D2023+100*n	Slave device AI1	D2028+100*n	Actual frequency	D2013+100*n
Actual mode	D2011+100*n	Actual mode	D2011+100*n	Slave device AI2	D2029+100*n		
				Slave device AI3	D2030+100*n		

Because usage requires only simple to open the corresponding PDO, where TXPDO employs D2034+100*n settings and RXPDO employs D2067+100*n settings.

These two special D areas are defined as follows:

	PDO4		PDO3		PDO2		PDO1	
Default definition	Torque		Position		Remote I/O		Speed	
bit	15	14–12	11	10–8	7	6–4	3	2–0
Definition	En	Length	En	Length	En	Length	En	Length

En: indicates whether PDO is used

Length: indicates mapping of several variables

In a simple example, if we want to control a C2000 Plus slave device and make it to operate in speed mode, we only have to make the following settings:

D2034+100*n =000Ah

Length:	TX PDO							
	PDO4		PDO3		PDO2		PDO1	
	Description	Special D	Description	Special D	Description	Special D	Description	Special D
1	Controller Word	D2008+100*n	Controller Word	D2008+100*n	Slave device DO	D2027+100*n	Controller Word	D2008+100*n
2	Target torque	D2017+100*n	Target	D2020+100*n D2021+100*n	Slave device AO1	D2031+100*n	Target speed	D2012+100*n
3	Control method	D2010+100*n	Control method	D2010+100*n	Slave device AO2	D2032+100*n		
4					Slave device AO3	D2033+100*n		

	PDO4		PDO3		PDO2		PDO1	
Definition	Torque		Position		Remote I/O		Speed	
bit	15	14–12	11	10–8	7	6–4	3	2–0
Definition	0	0	0	0	0	0	1	2

D2067+100*n =000Ah

Length:	TX PDO							
	PDO4		PDO3		PDO2		PDO1	
	Description	Special D	Description	Special D	Description	Special D	Description	Special D
1	Controller Word	D2009+100*n	Controller Word	D2009+100*n	Slave device DI	D2026+100*n	Controller Word	D2009+100*n
2	Actual torque	D2018+100*n	Actual position	D2022+100*n D2023+100*n	Slave device AI1	D2028+100*n	Actual frequency	D2013+100*n
3	Actual mode	D2011+100*n	Actual mode	D2011+100*n	Slave device AI2	D2029+100*n		
4					Slave device AI3	D2030+100*n		

	PDO4		PDO3		PDO2		PDO1	
Definition	Torque		Position		Remote I/O		Speed	
bit	15	14–12	11	10–8	7	6–4	3	2–0
Definition	0	0	0	0	0	0	1	2

Switch the PLC to Run after completing settings. Now wait for successful initialization of CANopen (M1059 = 1 and M1061 = 0), and then initiate CANopen memory mapping (M1034 = 1). The control word and frequency command will now automatically refresh to the corresponding slave device (D2008+n*100 and D2012+n*100), and the slave device's status word and currently

frequency will also be automatically sent back to the master station (D2009+n*100 and D2013+n*100). This also illustrates how the master can handle these tasks through read/write operations in the special D area.

Furthermore, it should be noted that the remote I/O of PDO2 can obtain the slave device's current DI and AI status, and can also control the slave device's DO and AO status. Nevertheless, after introducing a fully automatic mapping special D, the C2000 Plus CANopen master also provides additional information refreshes. For instance, while in speed mode, acceleration/deceleration settings may have been refreshed. The special D therefore also stores some seldom-used real-time information, and these commands can be refreshed using the CANFLS command. The following is the C2000 Plus's current CANopen master data conversion area, which has a range of D2001+100*n–D2033+100*n, as shown below:

1. The range of n is 0–7
2. ●Indicates PDOTX, ▲Indicates PDORX; unmarked special D can be refreshed using the CANFLS command

Special D	Description of Function	Default	PDO Default				R/W
			1	2	3	4	
D2000+100*n	Station number n of slave station Setting range: 0–127 0: No CANopen function	0					RW
D2002+100*n	Manufacturer code of slave station number n (L)	0					R
D2003+100*n	Manufacturer code of slave station number n (H)	0					R
D2004+100*n	Manufacturer's product code of slave station number n (L)	0					R
D2005+100*n	Manufacturer's product code of slave station number n (H)	0					R

Basic definitions

Special D	Description of Function	Default	PDO Default				R/W
			1	2	3	4	
D2006+100*n	Communications break handling method of slave station number n	0					RW
D2007+100*n	Error code of slave station number n error	0					R
D2008+100*n	Control word of slave station number n	0	●		●	●	RW
D2009+100*n	Status word of slave station number n	0	▲		▲	▲	R
D2010+100*n	Control mode of slave station number n	2					RW
D2011+100*n	Actual mode of slave station number n	2					R

Velocity Control

Special D	Description of Function	Default	PDO Default				R/W
			1	2	3	4	
D2001+100*n	Torque restriction on slave station number n	0					RW
D2012+100*n	Target speed of slave station number n (rpm)	0	●				RW
D2013+100*n	Actual speed of slave station number n (rpm)	0	▲				R
D2014+100*n	Error speed of slave station number n (rpm)	0					R
D2015+100*n	Acceleration time of slave station number n (ms)	1000					RW
D2016+100*n	Deceleration time of slave station number n (ms)	1000					RW

Torque control

Special D	Description of Function	Default	PDO Default				R/W
			1	2	3	4	
D2017+100*n	Target torque of slave station number n(-100.0% – +100.0%)	0				●	RW
D2018+100*n	Actual torque of slave station number n(XX.X%)	0				▲	R
D2019+100*n	Actual current of slave station number n(XX.XA)	0					R

Position control

Special D	Description of Function	Default:	PDO Default:				R/W
			1	2	3	4	
D2020+100*n	Target of slave station number n (L)	0			●		RW
D2021+100*n	Target of slave station number n (H)	0					RW
D2022+100*n	Actual position of slave station number n (L)	0			▲		R
D2023+100*n	Actual position of slave station number n (H)	0					R
D2024+100*n	Speed chart of slave station number n (L)	10000					RW
D2025+100*n	Speed chart of slave station number n (H)	0					RW

Remote I/O

Special D	Description of Function	Default:	PDO Default:				R/W
			1	2	3	4	
D2026+100*n	MI status of slave station number n	0		▲			R
D2027+100*n	MO setting of slave station number n	0		●			RW
D2028+100*n	AI1 status of slave station number n	0		▲			R
D2029+100*n	AI2 status of slave station number n	0		▲			R
D2030+100*n	AI3 status of slave station number n	0		▲			R
D2031+100*n	AO1 setting of slave station number n	0		●			RW
D2032+100*n	AO2 setting of slave station number n	0		●			RW
D2033+100*n	AO3 setting of slave station number n	0		●			RW

After gaining an understanding of special D definitions, we return to setting steps. After entering the values corresponding to D1090 to D1099, D2000+100*n, D2034+100*n and D2067+100*n, we can begin to perform downloading, which is performed in accordance with the following steps:

1. D2000 and D2100 are set as 20 and 21, and D2200, D2300, D2400, D2500, D2600, and D2700 are set as 0; if a setting of 0 causes problems, D1091 can be set as 3, and slave stations 2 to 7 can be closed.
2. Switch PLC to Stop status.
3. Press the transmit button.
4. Click on write memory after exiting the window.
5. Ignore D0–D399.
6. Change the second range to D1090–D1099.
7. Click on Confirm.

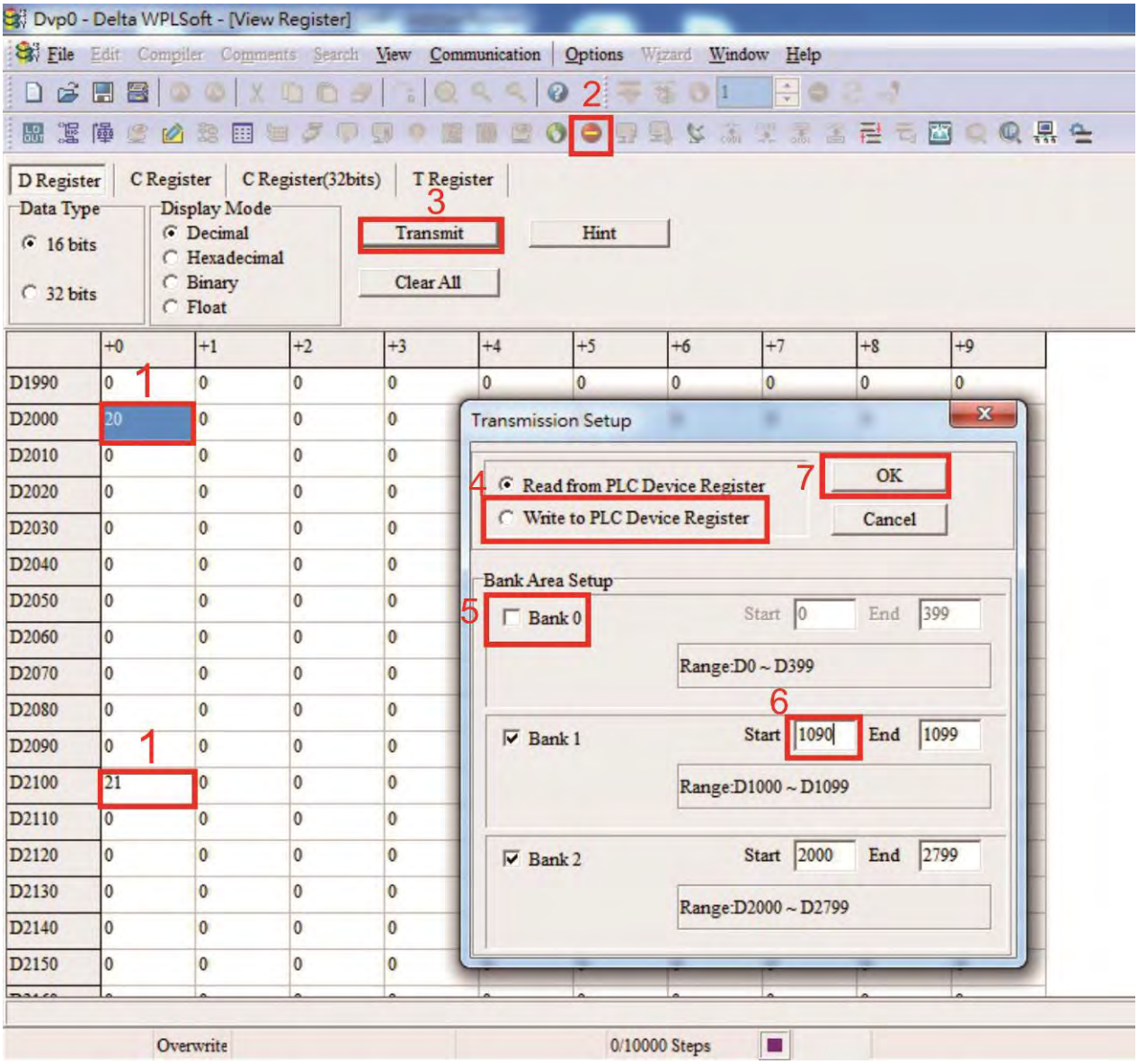

■ Another method can be used to set D1091: Determine which of slave stations 0 to 7 will not be needed, and set the corresponding bits to 0. For instance, if it is not necessary to control slave stations 2, 6 and 7, merely set D1091 = 003B, and the setting method is the same as described above: Use WPL to initiate **communications > use register edit (T C D)** function to perform settings.

Step 3: Set the master's communications station number and communications speed

- ☑ When setting the master's station number (Pr. 09-46, default is set as 100), make sure not to use the same number as a slave station.
- ☑ Set the CANopen communications speed (Pr. 09-37); regardless of whether the drive is defined as a master or slave station, the communications speed is set via this parameter.

Step 4: Write program code

Real-time access: Can directly read/write to or from the corresponding D area.

Non real-time access:

Read command: Use the CANRX command for reading. M1066 will be 1 when reading is completed; M1067 will be 1 if reading is successful, and M1067 will be 0 if an error has occurred.

Write command: Use the CANTX command for writing. M1066 will be 1 when writing is completed; M1067 will be 1 if writing is successful, and M1067 will be 0 if an error has occurred.

Refresh command: Use CANFLS command to refresh (if there are RW attributes, the master will write to the slave station; if there are RO attributes, the slave station will return the read values to the master); M1066 will be 1 if refresh has been completed; M1067 will be 1 if refresh is successful, and M1067 will be 0 if an error has occurred.

NOTE

When using CANRX, CANTX or CANFLS, internal implementation commands will wait until M1066 is completed before executing the next CANRX, CANTX or CANFLS.

Afterwards, download program to the drive (Please note that the PLC's default communications format is ASCII 7N2 9600, and the station number is 2. The WPL must therefore be modified, and the WPL setting pathway is **settings > communications settings**)

Step 5: Set the slave stations' station numbers, communications speed, control source, and command source

Delta's C2000 Plus and EC series devices currently support the CANopen communications interface drive, and the corresponding slave station numbers and communications speed parameters are as follows:

	Corresponding device parameters		Value	Definition
	C2000 Plus	E-C		
Slave station address	09-36	09-20	0	Disable CANopen hardware interface
			1–127	CANopen Communication address
Communication speed	09-37	09-21	0	1Mbps
			1	500Kbps
			2	250Kbps
			3	125Kbps
			4	100Kbps
			5	50Kbps
Control source	00-21	-	3	
	-	02-01	5	
Frequency source	00-20	-	6	
	-	02-00	5	
Torque source	11-33	-	3	
	-	-	-	
Position source	11-40	-	3	
	-	-	-	

Delta's A2 Servo currently supports the CANopen communications interface, and the corresponding slave station numbers and communications speed parameters are as follows:

	Corresponding device parameters	Value	Definition
	A2		
Slave station address	03-00	1–127	CANopen Communication address
Communication speed	03-01 bit 8-11 XRXX	R= 0	125Kbps
		R= 1	250Kbps
		R= 2	500Kbps
		R= 3	750Kbps
		R= 4	1Mbps
Control/command source	01-01	B	

Step 6: Connect hardware wiring

When performing wiring, note the head and tail terminal resistance; connection methods are as follows:

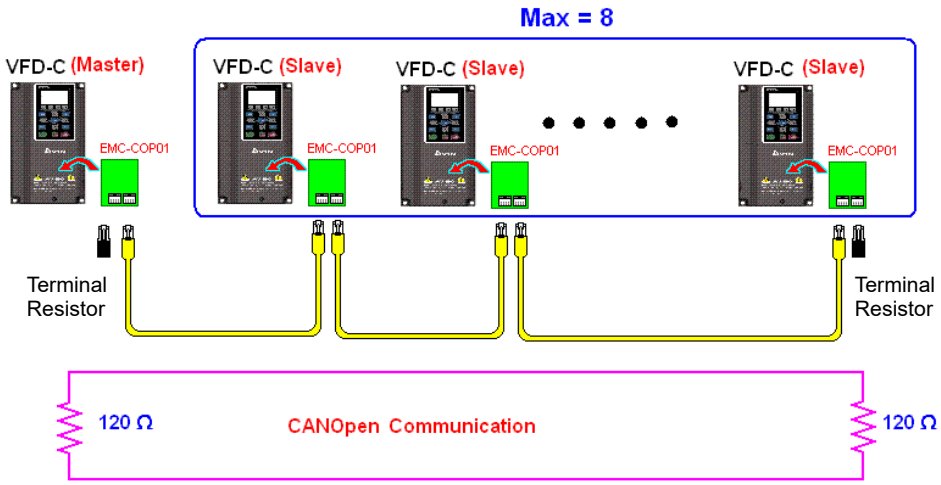

Step 7: Initiate control

After a program has been written and downloaded, switch the PLC mode to Run. Merely turn power to master and slave stations off and then on again.

Refer to CANMasterTest 1 vs. 2 drive.dvp

Example

C2000 Plus drive one-to-two control

Step 1: Activating CANopen Master functions

- ☑ Pr. 09-45=1 (initiates Master functions); restart power after completing setting, the status bar on the KPC-CC01 digital keypad will display "CAN Master".
- ☑ Pr. 00-02=6 reset PLC (please note that this action will reset the program and PLC registers to the default values)
- ☑ Turn power off and on again.
- ☑ Use the KPC-CC01 digital keypad to set the PLC control mode as "**PLC Stop**" (if a newly-introduced drive is used, the blank internal PLC program will cause a PLFF warning code to be issued).

Step 2: Master memory correspondences

- ☑ Enable WPL
- ☑ Use keypad set PLC mode as Stop (PLC 2)
- ☑ WPL read D1070 to D1099, D2000 to D2799
- ☑ Set D2000=10, D2100=11
- ☑ Set D2100, 2200, 2300, 2400, 2500, 2600, 2700=0
- ☑ Download D2000 to D2799 settings

Step 3: Set the master's communications station number and communications speed

- ☑ When setting the master's station number (Pr. 09-46, default is set as 100), make sure not to use the same number as a slave station.
- ☑ Set the CANopen communications speed as 1M (Pr. 09-37=0); regardless of whether the drive is defined as a master or slave station, the communications speed is set via this parameter.

Step 4: Write program code

Real-time access: Can directly read/write to or from the corresponding D area.

Non real-time access:

Read command: Use the CANRX command for reading. M1066 will be 1 when reading is complete; M1067 will be 1 if reading is successful, and M1067 will be 0 if an error has occurred.

Write command: Use the CANTX command for writing. M1066 will be 1 when writing is complete; M1067 will be 1 if writing is successful, and M1067 will be 0 if an error has occurred.

Refresh command: Use CANFLS command to refresh (if there are RW attributes, the master will write to the slave station; if there are RO attributes, the slave station will return the read values to the master); M1066 will be 1 if refresh has been completed; M1067 will be 1 if refresh is successful, and M1067 will be 0 if an error has occurred.

NOTE

When using CANRX, CANTX or CANFLS, internal implementation commands will wait until M1066 is completed before executing the next CANRX, CANTX or CANFLS.

Afterwards, download program to the drive (Please note that the PLC's default communications format is ASCII 7N2 9600, and the station number is 2. The WPL must therefore be modified, and the WPL setting pathway is **settings > communications settings**)

Step 5: Set the slave stations' station numbers and communications speed

Slave station no. 1: 09-37 = 0(Speed 1M) 09-36=10(Node ID 10)

Slave station no. 2: 09-37 = 0(Speed 1M) 09-36=10(Node ID 11)

Step 6: Connect hardware wiring

When performing wiring, note the head and tail terminal resistance; connection methods are as follows:

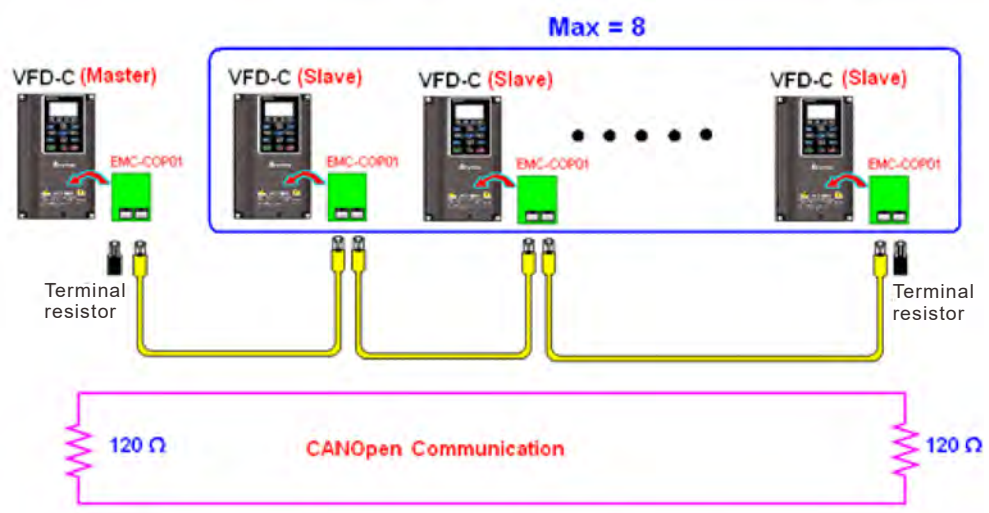

Step 7: Initiate control

After a program has been written and downloaded, switch the PLC mode to Run. Merely turn power to master and slave stations off and then on again.

Refer to CANMasterTest 1 vs. 2 driver.dvp

16-9 Explanation of various PLC mode controls (speed, torque, homing, and position)

The torque mode and position mode are based on FOC vector control and speed mode also supports FOC vector control. Control therefore cannot be performed successfully unless finishing motor parameter auto tuning ahead of time for the torque mode and position mode, and the speed mode based on FOC.

In addition, motors are classified as two types: IM and PM. For IM motors, the auto tuning of the motor parameter will be enough. For PM motors, after completing motor parameter auto tuning, the auto tuning of motor origin angle of deviation should be completed as well. Please refer to Chapter 12-1 Pr. 05-00 for detailed explanation.

※ If a PM motor belongs to Delta's ECMA series, motor parameters can be directly input from data in the servo motor catalog, and parameter study will not be needed.

Control methods and settings are explained as follows:

Speed control:

Register table for speed mode:

Control special M

Special M	Description of Function	Attributes
M1025	Drive frequency = set frequency (ON) / drive frequency =0 (OFF)	RW
M1026	Drive operating direction FWD(OFF) / REV(ON)	RW
M1040	Hardware power (Servo On)	RW
M1042	Quick stop	RW
M1044	Pause (Halt)	RW
M1052	Lock frequency (lock, frequency locked at the current operating frequency)	RW

Status special M

Special M	Description of Function	Attributes
M1015	Frequency attained (when used together with M1025)	RO
M1056	Servo On Ready	RO
M1058	On Quick Stopping	RO

Control special D

Special D	Description of Function	Attributes
D1060	Mode setting (speed mode is 0)	RW

Status special D

Special D	Description of Function	Attributes
D1037	Converter output frequency (0.00–600.00)	RO
D1050	Actual operating mode (speed mode is 0)	RO

Speed mode control commands:

FREQ(P)	S1	S2	S3
	Target speed	The first acceleration time setting	The first deceleration time setting

Example of speed mode control:

Before performing speed control, if the FOC (magnetic field orientation) control method is used, setting of electromechanical parameters must first be completed.

1. Setting D1060 = 0 will shift the converter to the speed mode (default).
2. Use the FREQ command to control frequency, acceleration time, and deceleration time.
3. Set M1040 = 1, the drive will now be excited, but the frequency will be 0.
4. Set M1025 = 1, the drive frequency command will now jump to the frequency designated by FREQ, and acceleration/deceleration will be controlled on the basis of the acceleration time and deceleration time specified by FREQ.
5. M1052 can be used to lock the current operating frequency.
6. M1044 can be used to temporarily pause operation, and the deceleration method will comply with deceleration settings.
7. M1042 can be used to perform quick stop, and deceleration will be as quick as possible without giving rise to an error. (There may still be a jump error if the load is too large.)
8. Control user rights: M1040(Servo ON) > M1042(Quick Stop) >M1044(Halt) >M1052(LOCK)

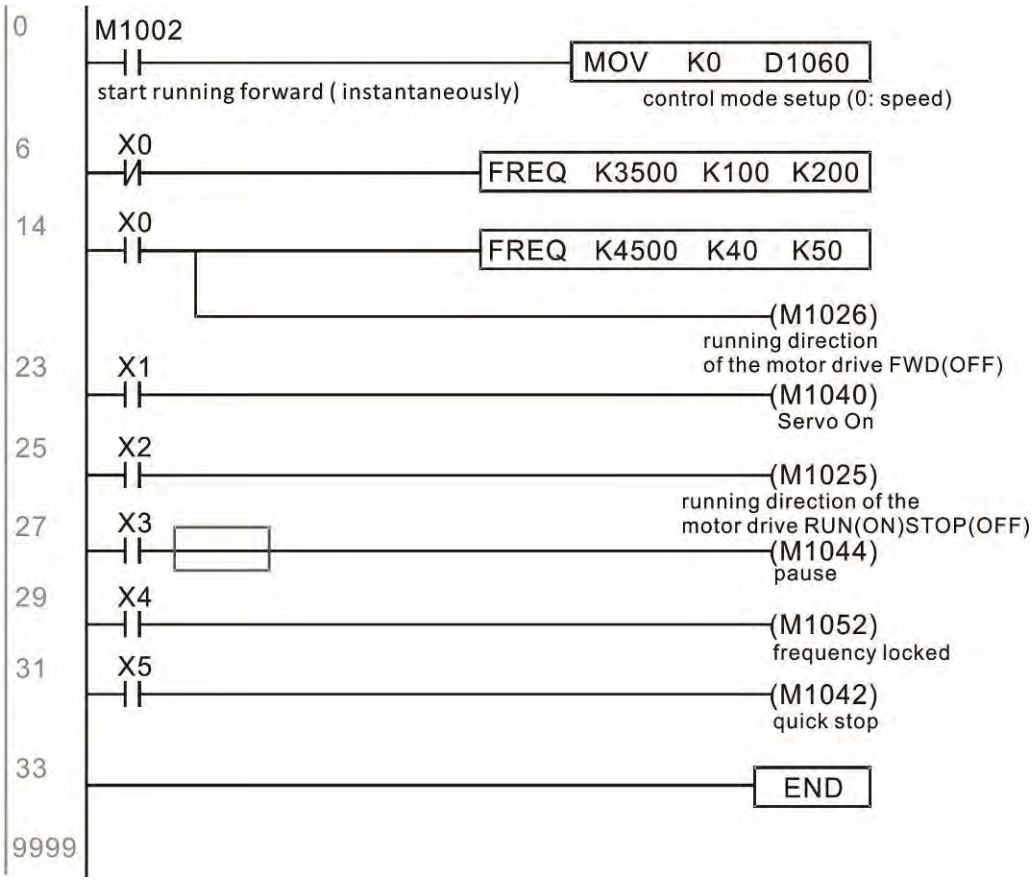

Torque control:

Register table for torque mode:

Control special M

Special M	Description of Function	Attributes
M1040	Servo On	RW

Status special M

Special M	Description of Function	Attributes
M1056	Servo On Ready	RO
M1063	Torque attained	RO

Control special D

Special D	Description of Function	Attributes
D1060	Operating mode setting (torque mode is 2)	RW

Status special D

Special D	Description of Function	Attributes
D1050	Actual operating mode (speed mode is 0)	RO
D1053	Actual torque	RO

Torque mode control commands:

TORQ(P)	S1	S2
	Target torque (with numbers)	Frequency restrictions

Example of torque mode control:

The setting of electromechanical parameters involved in torque control must be completed before implementing torque control.

1. Set D1060 = 2 to change the converted to the torque mode.
2. Use the TORQ command to implement torque control and speed limits.
3. Set M1040 = 1; the drive will now be excited, and immediately jump to the target torque or speed limit. D1053 can be used to find out the current torque.

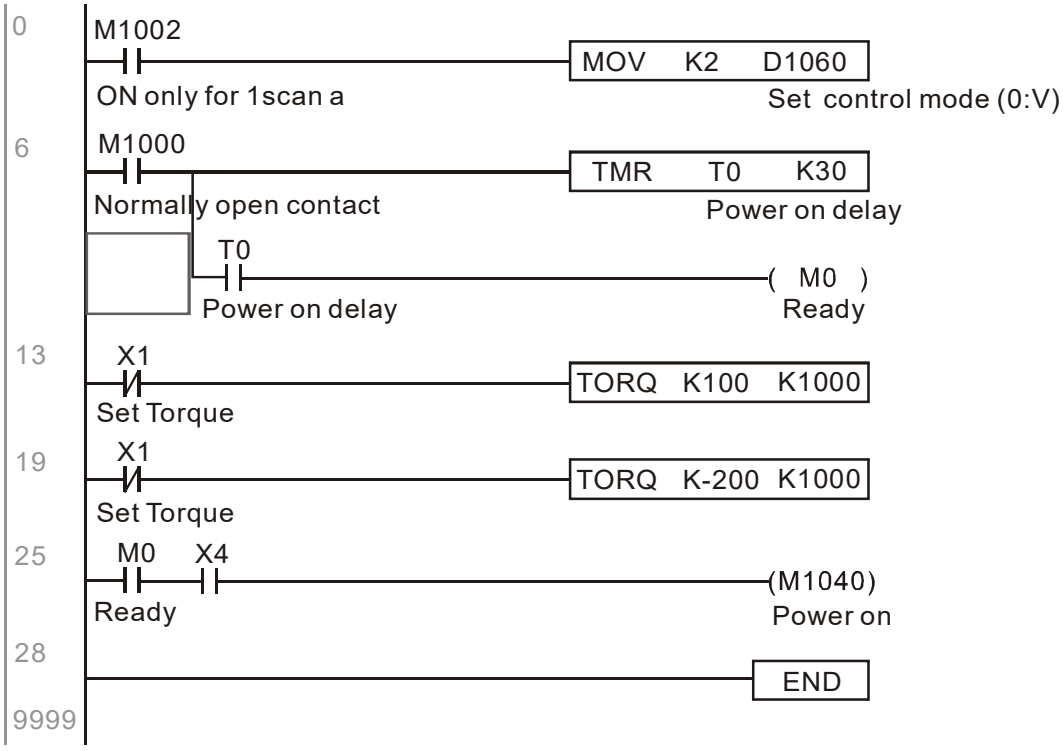

Homing control / position control:

Register table in homing mode / position mode:

Control special M

Special M	Description of Function	Attributes
M1040	Servo On	RW
M1048	Move to new position, must use control mode as position mode (D1060 = 1) and M1040 = 1	RW
M1050	Absolute position / relative position (0: relative / 1: absolute)	RW
M1055	Search for origin (home start), must use control mode as position mode (D1060 = 3) and M1040 = 1	RW

Status special M

Special M	Description of Function	Attributes
M1064	Target reached	RO
M1070	Return home complete	RO
M1071	Homing error	RO

Control special D

Special D	Description of Function	Attributes
D1060	Operating mode setting (position mode is 1, homing mode is 3)	RW

Status special D

Special D	Description of Function	Attributes
D1050	Actual operating mode (speed mode is 0)	RO
D1051	Actual position (Low word)	RO
D1052	Actual position (High word)	RO

※ D1051 and D1052 must be combined to give the actual location, and it has a serial number.

Position mode control commands:

DPOS(P) S1
Target (with numbers)

Example of homing mode / position mode control:

First complete setting of electromechanical parameters connected with position before implementing homing control or position control.

1. Set Pr. 00-40 to select the homing method and the corresponding limit sensors and origin. (Setting the MI function gives a reverse rotation limit of 44, a forward rotation limit of 45, and an origin proximity of 46. Because the C2000 Plus currently only supports a Z-phase origin, the encoder card must provide Z-phase.)
2. Set D1060 = 3 to change the converter to the homing mode.
3. Set M1040 = 1
   In the VF/SVC/VFPG mode, will enter the STANDBY mode (Pr. 01-34 can be used to access the STANDBY mode's action options).
   In the FOC+PG mode, zero speed holding will occur
4. Set M1055 = 1, and the drive will now start to search for the origin.
5. When homing is complete, M1070 will change to ON. If you now set D1060 = 1, the control mode will switch to position mode (please note that M1040 will not change to off; this mechanical origin move).

6. The DPOS command can now be used to designate the drive's target location. M1050 or Pr. 00-12 can be used to set a change in absolute or relative position.
7. Implement M1048 Pulse ON once (must be more than 1 ms in duration), and the converter will begin to move toward the target (M1040 must be 1 to be effective). The current position can be obtained from D1051 and D1052.

Part 1: The initialization mode is defined as the "homing" mode from the beginning (set D1060 = 3). X2 is used to implement converter excitation.

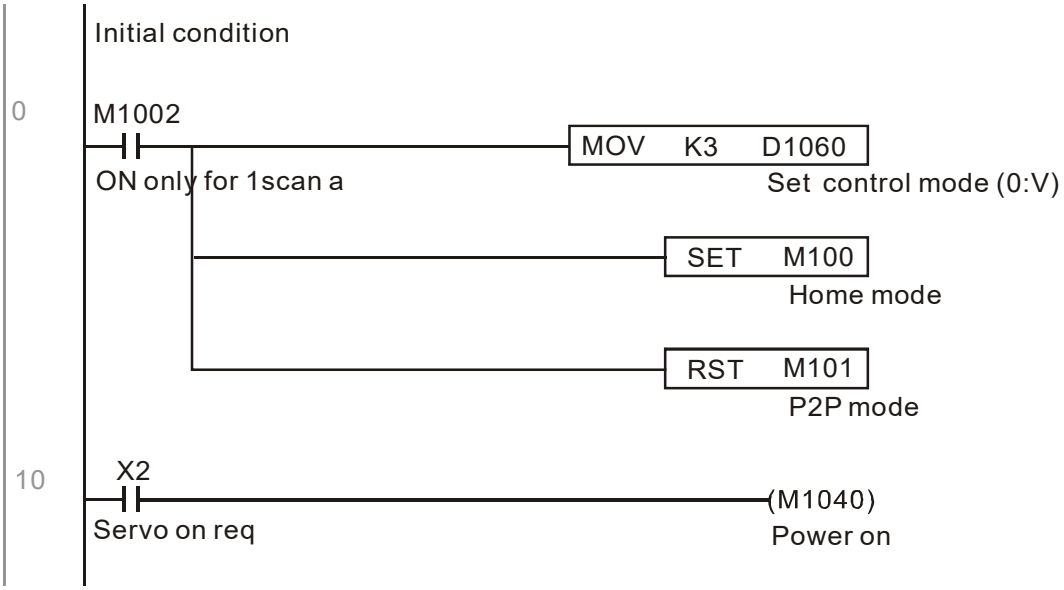

Part 2: Homing; Use X3 to trigger homing action; will automatically switch to position mode after completion.

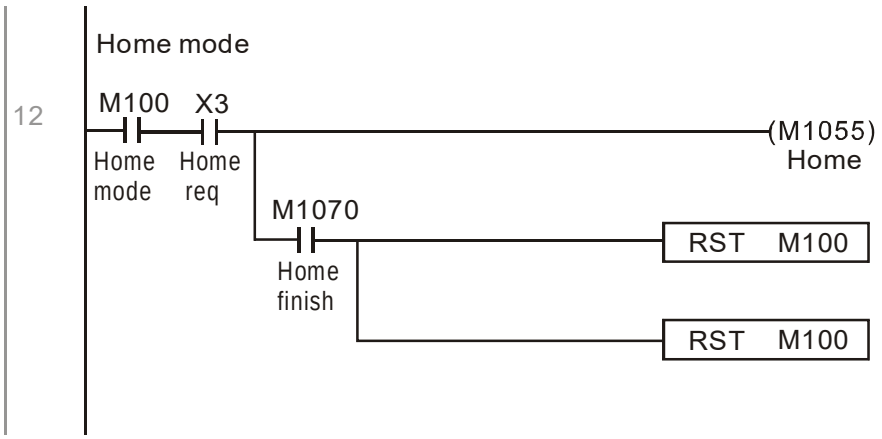

Part 3: Point-to-point movement; switch to position mode (set D1060 = 1), and move back and forth between position points. (+300000 – -300000)

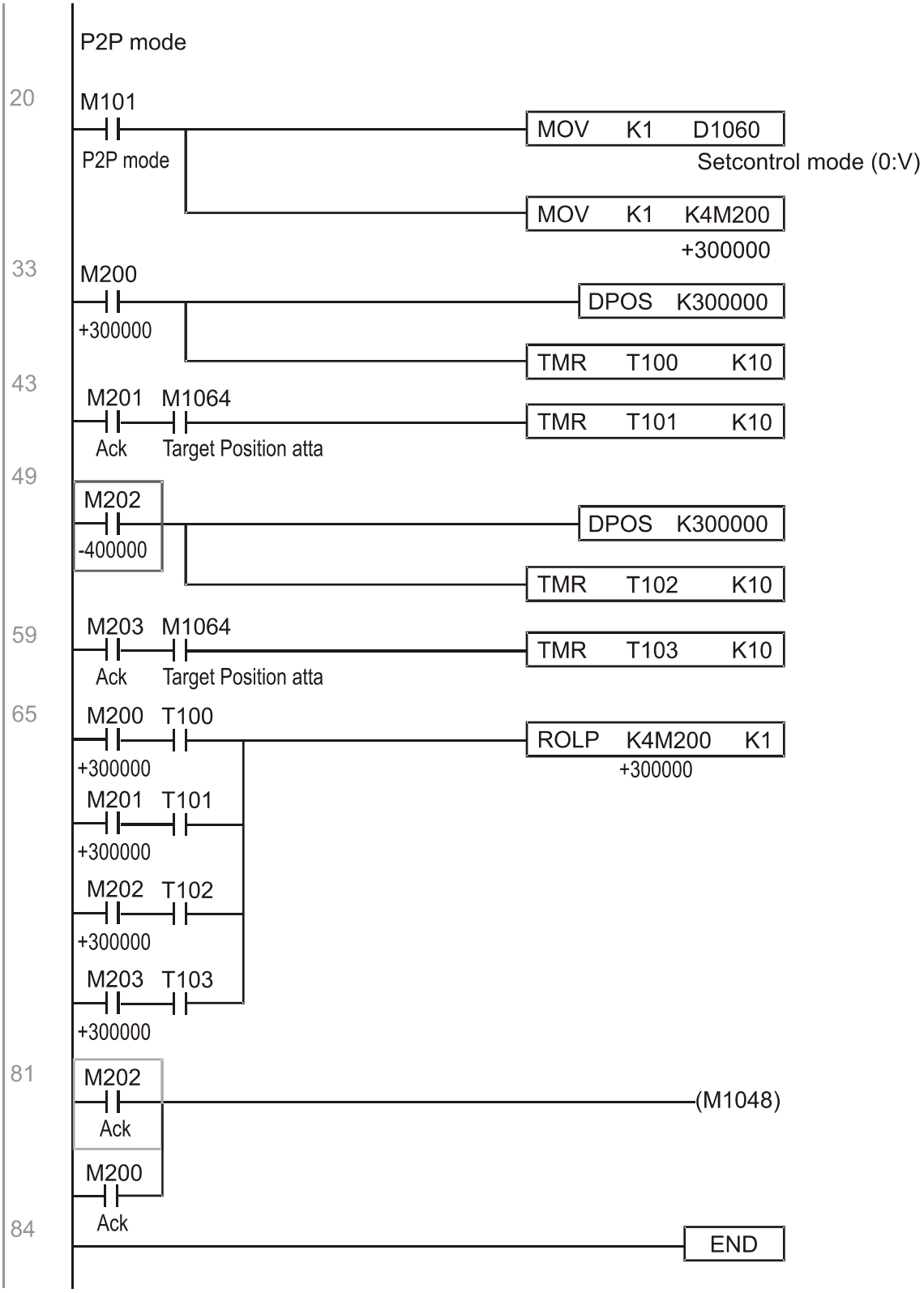

※ If homing is not needed in an application, the first and second parts can be skipped. However, the M1040 condition from Part 1 must be included, and the writing method in Part 1 involve the use of X2 to achieve direct access. In addition, when M101 is used at the beginning of Part 3 to set the control mode, it can be rewritten as M1002, which will put the PLC immediately into the position mode when it starts running.

16-10 Internal communications main node control

The protocol has been developed in order to facilitate the use of RS-485 instead of CANopen in certain application situations. The RS-485 protocol offers similar real-time characteristics as CANopen. The maximum number of slave devices is 8.

Internal communications have a master-slave structure. The initiation method is very simple:

Slave device:
Set Pr. 09-31 = -1 to -8 in order to access 8 nodes, and set Pr. 00-20 = 1 to define the control source as RS-485 and access the reference sources that must be controlled, namely speed command (Pr. 00-21 = 2), torque command (Pr. 11-33 = 1), and position command (Pr. 11-40=2). This will complete slave device settings. (PLC functions do not need to be activated)

System
Setting the master is even simpler; it is only necessary to set Pr. 09-31 = -10, and enable the PLC.

Hardware wiring: The master and slave stations are connected via the RS-485 serial port. The C2000 Plus provides two types of RS-485 serial port interfaces, see the figure below: (please refer to Chapter 06 “Control Terminals” concerning detailed terminal connections)

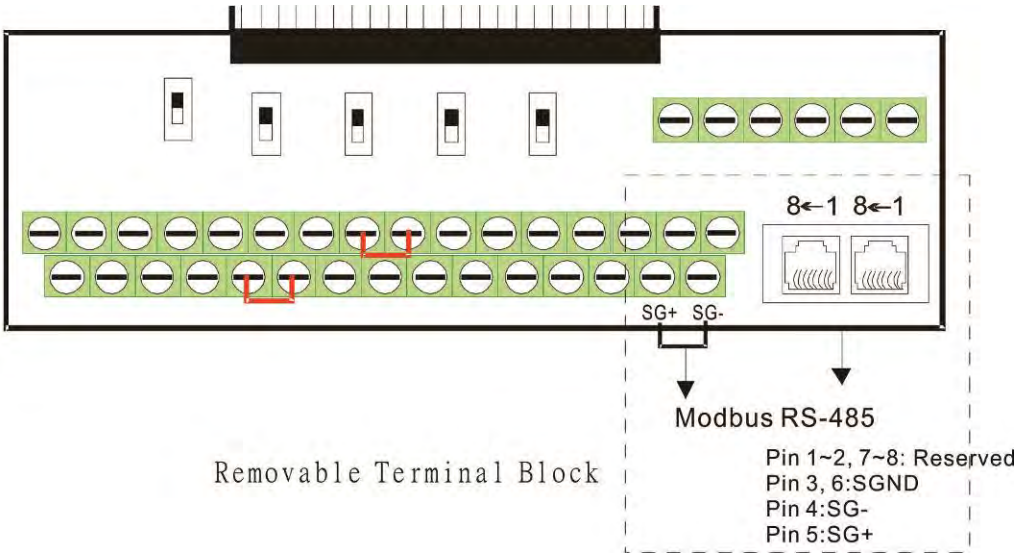

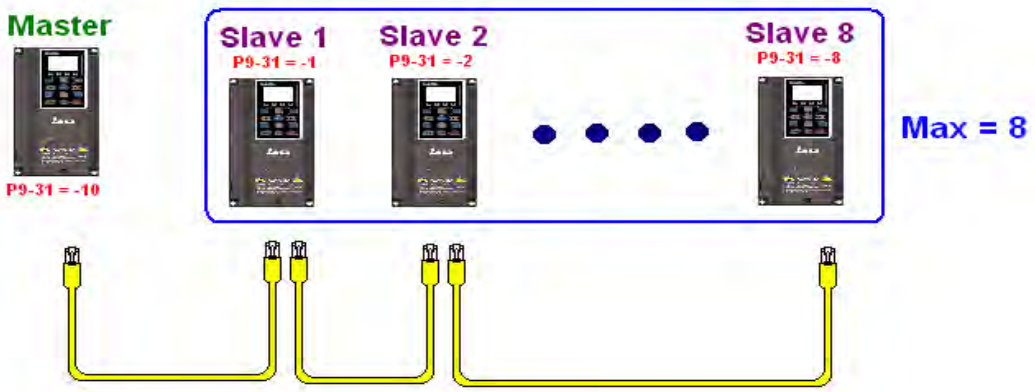

Master programming: In a program, D1110 can be used to define a slave station to be controlled (1–8, if set as 0, can jump between 8 stations). Afterwards, M1035 is set as 1, and the memory positions of the master and slave stations will correspond. At this time, it is only necessary to send commands to the correlation slave station address to control that station. The following is a register table connected with internal communications:

Control special M

Special M	Description of Function	Attributes
M1035	Initiates internal communications control	RW

Control special D

Special D	Description of Function	Attributes
D1110	Internal node communications number 1–8 (set the station number of the slave station to be controlled)	RW

Special D	Description of Function							Attributes
	Definition	bit	User rights	Speed mode	Location mode	Torque mode	Homing mode	
D1120 + 10*N	Internal node N control command	0	4	Command functions	-	-	Homing Origin	RW
		1	4	Reverse rotation requirements	Immediate change	-	-	
		2	4	-	-	-	-	
		3	3	Temporary pause	Temporary pause	-	-	
		4	4	Frequency locking	-	-	Temporary pause	
		5	4	JOG	-	-	-	
		6	2	Quick Stop	Quick Stop	Quick Stop	Quick Stop	
		7	1	Servo ON	Servo ON	Servo ON	Servo ON	
		11–8	4	Speed interval switching	Speed interval switching	-	-	
		13–12	4	Deceleration time change	-	-	-	
		14	4	Enable Bit 13–8	Enable Bit 13–8	-	-	
		15	4	Clear error code	Clear error code	Clear error code	Clear error code	
D1121 + 10*N	Internal node N control mode			0	1	2	3	RW
D1122 + 10*N	Internal node N reference command L			Speed command (no number)	Position command (with numbers)	Torque command (with numbers)	-	RW
D1123 + 10*N	Internal node N reference command H			-		Speed limit	-	RW

※ N = 0–7

Status special D

Special D	Description of Function	Attributes
D1115	Internal node synchronizing cycle (ms)	RO
D1116	Internal node error (bit0 = slave device 1, bit1 = slave device 2,…bit7 = slave device 8)	RO
D1117	Internal node online correspondence (bit0 = slave device 1, bit1 = slave device 2,…bit7 = slave device 8)	RO

Special D	Description of Function					Attributes
	bit	Speed mode	Location mode	Torque mode	Homing mode	
D1126 + 10*N	0	Frequency command arrival	Position command attained	Torque command attained	Zero command completed	RO
	1	Clockwise	Clockwise	Clockwise	Clockwise	
		Counterclockwise:	Counterclockwise:	Counterclockwise:	Counterclockwise:	
	2	Warning	Warning	Warning	Warning	
	3	Error	Error	Error	Error	
	5	JOG				
	6	Quick Stop	Quick Stop	Quick Stop	Quick Stop	
	7	Servo ON	Servo ON	Servo ON	Servo ON	
D1127 + 10*N		Actual frequency	Actual position (with numbers)	Actual torque (with numbers)	-	RO
D1128 + 10*N		-		-	-	

※ N = 0 – 7

Example: Assume it is desired to control slave station 1 operation at frequencies of 30.00Hz and 60.00 Hz, status, and online node correspondences:

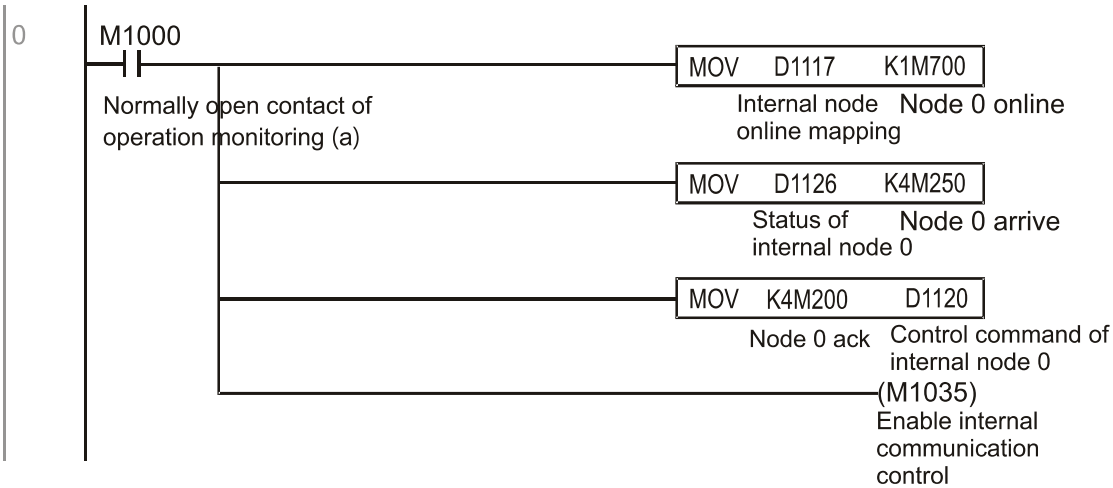

When it is judged that slave station 1 is online, delay 3 sec. and begin control

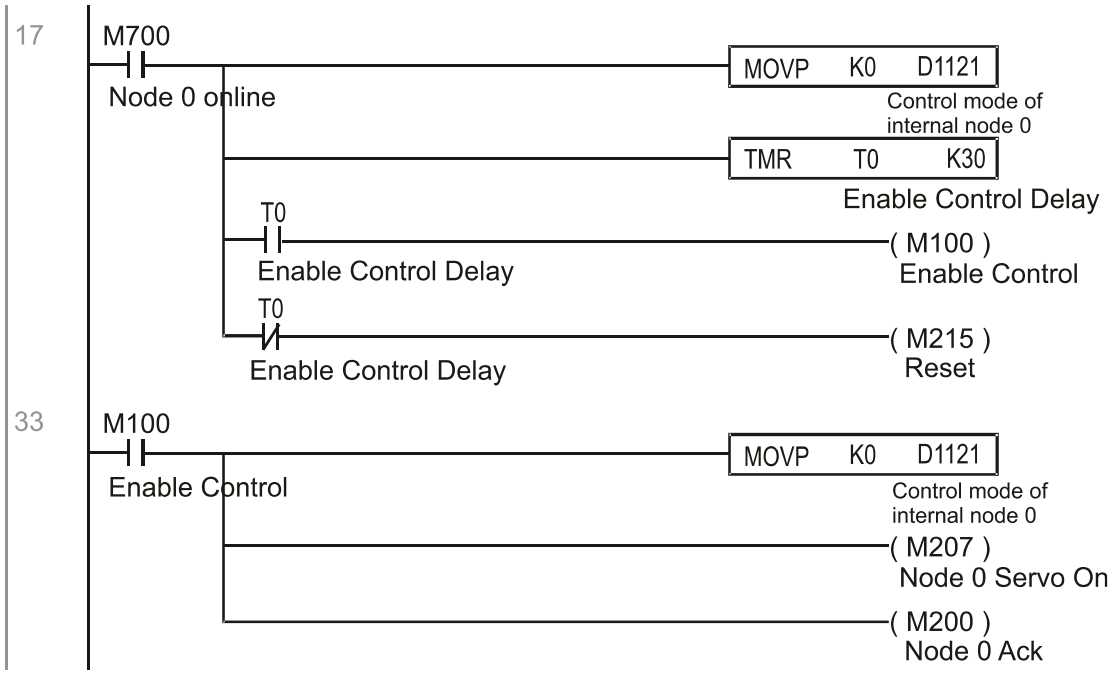

It is required slave station 1 maintains forward rotation at 30.00Hz for 1 sec., and maintains reverse rotation at 60.00 Hz for 1 sec., and repeat this cycle continuously.

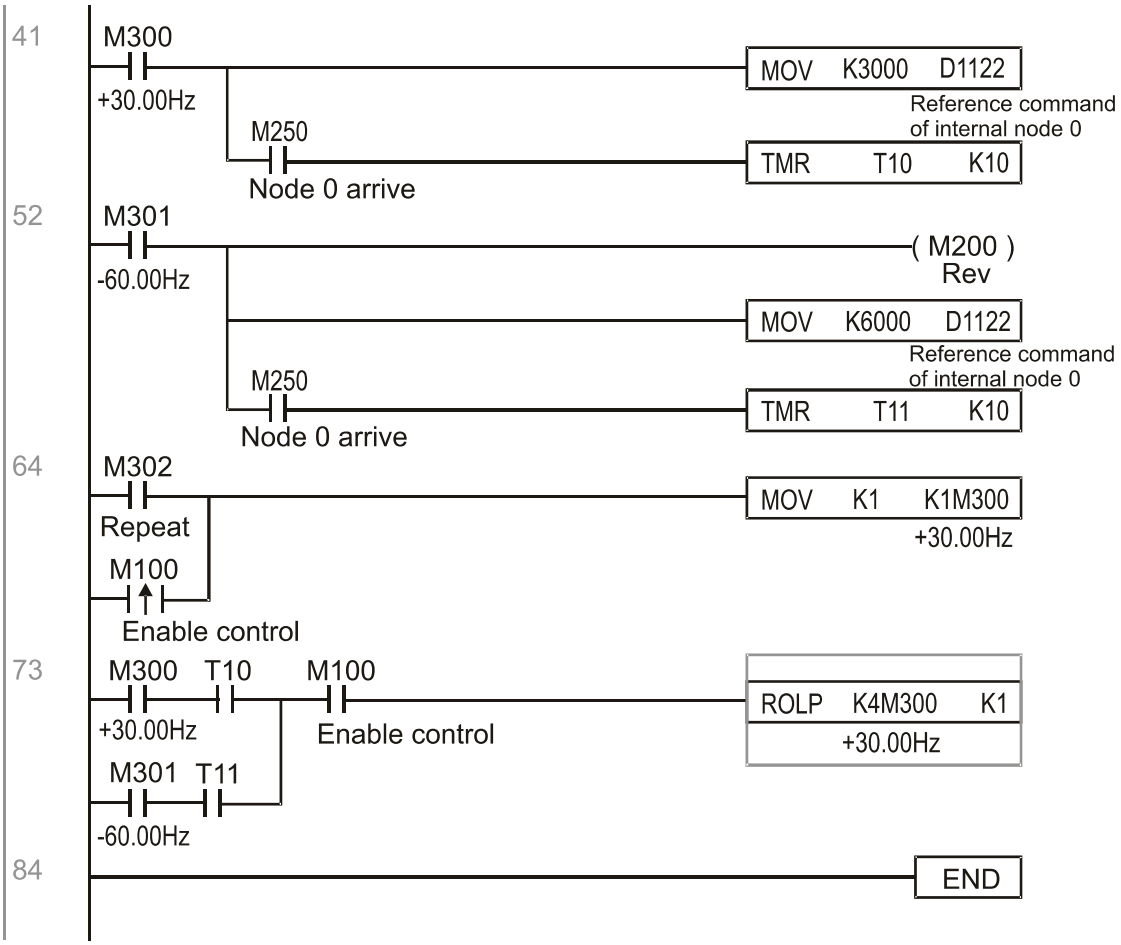

16-11 Count function using MI8

16-11-1 High-speed count function

The C2000 Plus's MI8 supports one-way pulse counting, and the maximum speed is 100K. The starting method is very simple, and only requires setting M1038 to begin counting. The 32 bit count value is stored on D1054 and D1055 in non-numerical form. M1039 can reset the count value to 0.

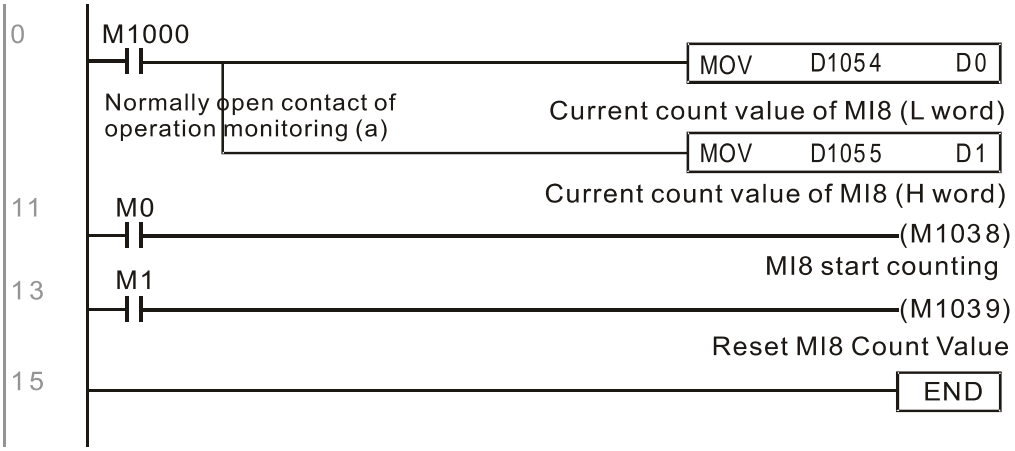

※ When the PLC program defines MI8 for use as a high-speed counter, and also for use in PLC procedures, it must be written to M1038 or M1039, and the original MI8 functions will be disabled.

16-11-2 Frequency calculation function

Apart from high-speed counting, the C2000 Plus's MI8 can also convert a received pulse to frequency. The following figure shows that there is no conflict between frequency conversion and count calculations, which can be performed simultaneously.

PLC speed calculation formula

D1057 Speed

D1058 Interval between calculations

D1059 Decimal places

Assuming that there are 5 input pulses each second, (see figure below) we set D1058=1000ms=1.0 sec. as the calculation interval. This enables five pulses to be sent to the converter each second.

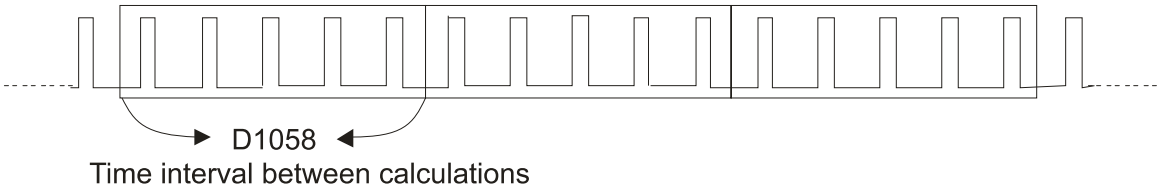

Assuming that each 5 pulses correspond to 1Hz, we set D1057=5.

Assuming that we wish to display numbers to two decimal places, we set D1059=2, which is also 1.00Hz. The numerical value displayed at D1056 is 100. For simplicity, the D1056 conversion formula can be expressed as in the following table:

$$D1056= \frac{\text{Pulses per second}}{D1057} \times \frac{1000}{D1058} \times 10^{D1059}$$

16-12 Modbus Remote IO Control Applications (use MODRW)

The C2000 Plus's internal PLC supports 485 read/write functions, which can be realized using the MODRW command. However, the 485 serial port must be defined as available for the PLC's 485 use before writing a program, and the Pr. 09-31 must be set as -12. After completing settings, the standard functions defined by 485 can be used to implement read/write commands at other stations. Communications speed is defined by parameter 09-01, the communications format is defined by Pr. 09-04, and the PLC's current station number is defined by Pr. 09-35. The C2000 Plus currently supports the functions read coil (0x01), read input (0x02), read register (0x03), write to single register (0x06), write to several coils (0x0F), and write to several registers (0x10). Explanations and the usage of these functions are provided as follows:

MODRW command					General meaning	Slave device is Delta's PLC meaning	Slave device is Delta's converter meaning
S1	S2	S3	S4	S5			
Node ID	Command	Address	Return: D area	Length			
K3	H01	H500	D0	K18	Read coil (bit)	Read 18 bits of data corresponding to slave station 3 PLC Y0 to Y21. This data is stored by bit 0 to 15 of the this station's D0 and bit 0 to bit 3 of D1.	Does not support this function
K3	H02	H400	D10	K10	Read input (bit)	Read 10 bits of data corresponding to slave station 3 PLC X0 to X11. This data is stored by bit 0 to 9 of this station's D10.	Does not support this function
K3	H03	H600	D20	K3	Read register (word)	Read 3 words of data corresponding to slave station 3 PLC T0 to T2. This data is stored by D20 to D22.	Read 3 words of data corresponding to slave station 3 converter parameters 06-00 to 06-02. This data is stored by D20 to D22
K3	H06	H610	D30	XX	Write to single register (word)	Write slave station 3 PLC's T16 to this station's D30 value	Write slave station 3 converter 06 to 16 parameter to this station's D30 value
K3	H0F	H509	D40	K10	Write to multiple coils (Bit)	Write slave station 3 PLC's Y11 to Y22 to bit 0 to 9 of D40.	Does not support this function
K3	H10	H602	D50	K4	Write to multiple registers (word)	Write slave station 3 PLC's T2 to T5 to D50 to D53	Write slave station 3 converter 06-02 to 06-05 parameters to this station's D50 to D53

※ XX indicates doesn't matter

After implementing MODRW, the status will be displayed in M1077 (485 read/write complete), M1078 (485 read/write error), and M1079 (485 read/write time out). M1077 is defined so as to immediately revert to 0 after the MODRW command has been implemented. However, any of three situations—a report of no error, a data error report, or time out with no report—will cause the status of M1077 to change to On.

Example program: Testing of various functions

At the start, will cause the transmitted time sequence to switch to the first data unit.

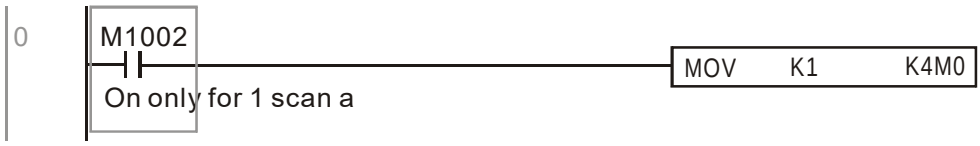

When the reported message indicates no error, it will switch to the next transmitted command

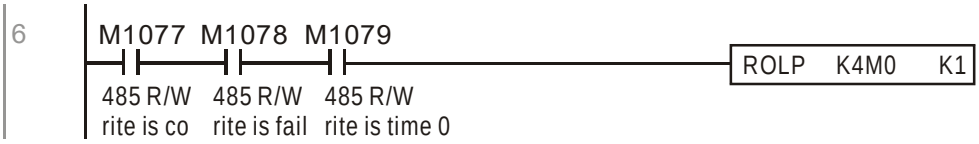

If time out occurs or an error is reported, the M1077 will change to On. At this time, after a delay of 30 scanning cycles, it will re-issue the original command once

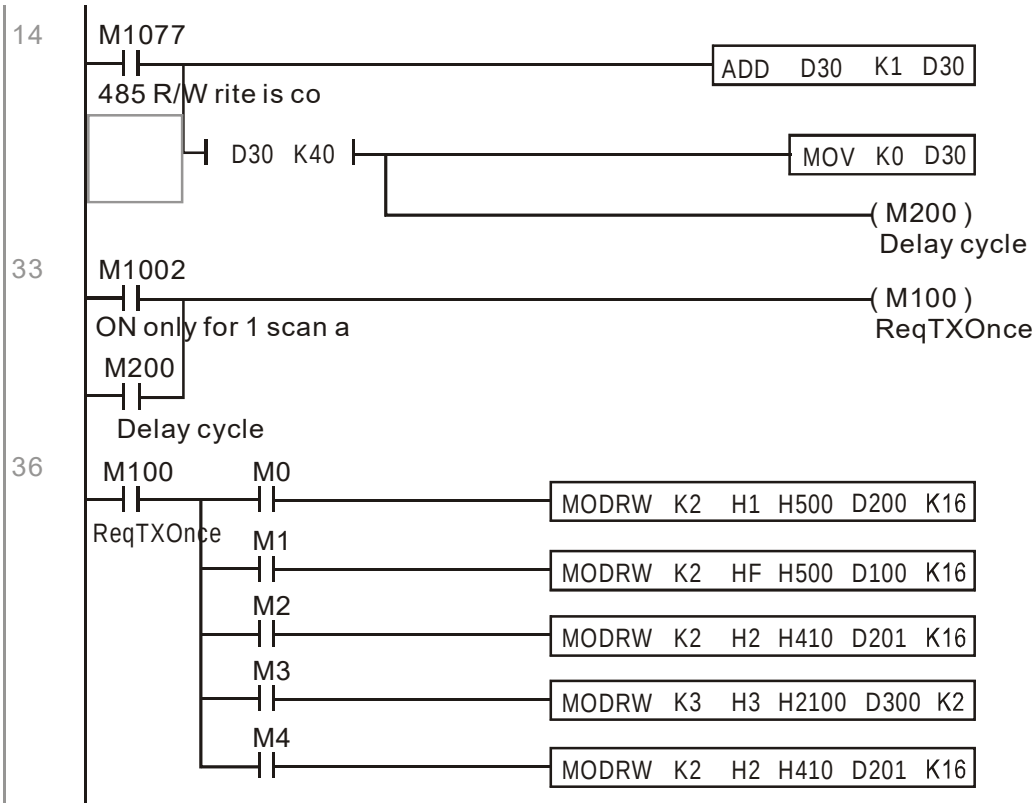

It will repeat after sending all commands

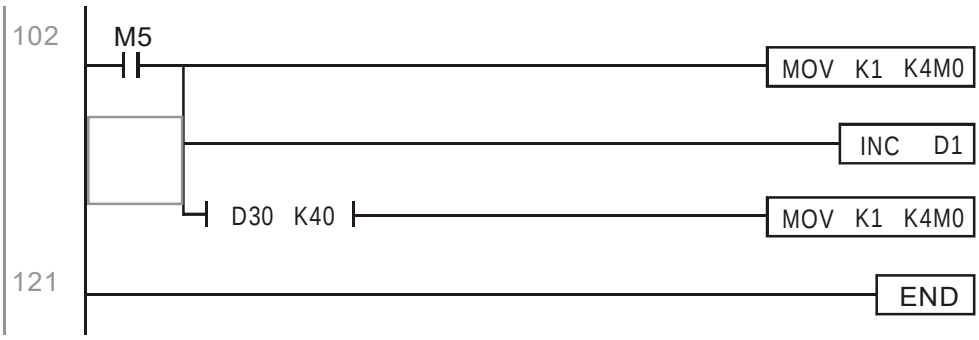

Practical applications:

Actual use to control the RTU-485 module.

Step 1: Set the communications format. Assume that the communications format is 115200, 8,N,2, RTU

C2000 Plus：The default PLC station number is set as 2 (09-35)

Pr. 09-31=-12 (COM1 is controlled by the PLC), Pr. 09-01=115.2 (The communications speed is 115200)

Pr. 09-04=13 (The format is 8,N,2, RTU)

RTU-485: The station number = 8 (give example)

ID7	ID6	ID5	ID4	ID3	ID2	ID1	ID0
0	0	0	0	1	0	0	0

PA3	PA2	PA1	PA0	DR2	DR1	DR0	A/R
1	**0**	**0**	**0**	**1**	**1**	**1**	**0**

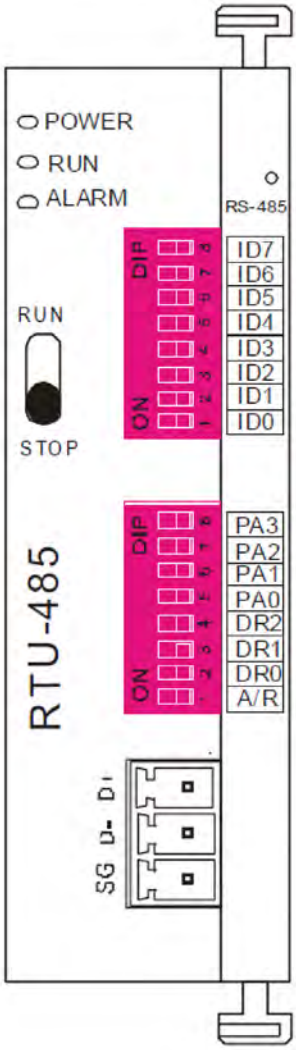

Communication station #:
ID0~ ID7 are defined as 2^0, 2^1, 2^2…2^6, 2^7

Communication protocol

PA3	PA2	PA1	PA0	A/R	Communication Protocol
OFF	OFF	OFF	OFF	ON	7,E,1 · ASCII
OFF	OFF	OFF	ON	ON	7,O,1 · ASCII
OFF	OFF	ON	OFF	ON	7,E,2 · ASCII
OFF	OFF	ON	ON	ON	7,O,2 · ASCII
OFF	ON	OFF	OFF	ON	7,N,2 · ASCII
OFF	ON	OFF	ON	ON	8,E,1 · ASCII
OFF	ON	ON	OFF	ON	8,O,1 · ASCII
OFF	ON	ON	ON	ON	8,N,1 · ASCII
ON	OFF	OFF	OFF	ON	8,N,2 · ASCII
OFF	ON	OFF	ON	OFF	8,E,1 · RTU
OFF	ON	ON	OFF	OFF	8,O,1 · RTU
OFF	ON	ON	ON	OFF	8,N,1 · RTU
ON	OFF	OFF	OFF	OFF	8,N,2 · RTU

DR2	DR1	DR0	Communicaton Speed
OFF	OFF	OFF	1,200 bps
OFF	OFF	ON	2,400 bps
OFF	ON	OFF	4,800 bps
OFF	ON	ON	9,600 bps
ON	OFF	OFF	19,200 bps
ON	OFF	ON	38,400 bps
ON	ON	OFF	57,600 bps
ON	ON	ON	115,200 bps

Step 2: Install control equipment. We sequentially connect a DVP16-SP (8 IN 8 OUT), DVP-04AD (4 channels AD), DVP02DA (2 channels DA), and DVP-08ST (8 switches) to the RTU-485.

The following corresponding locations can be obtained from the RTU-485's configuration definitions:

Module	Terminals	485 Address
DVP16-SP	X0–X7	0400H–0407H
	Y0–Y7	0500H–0507H
DVP-04AD	AD0–AD3	1600H–1603H
DVP02DA	DA0–DA1	1640H–1641H
DVP-08ST	Switch 0–7	0408H–040FH

Step 3: Physical configuration

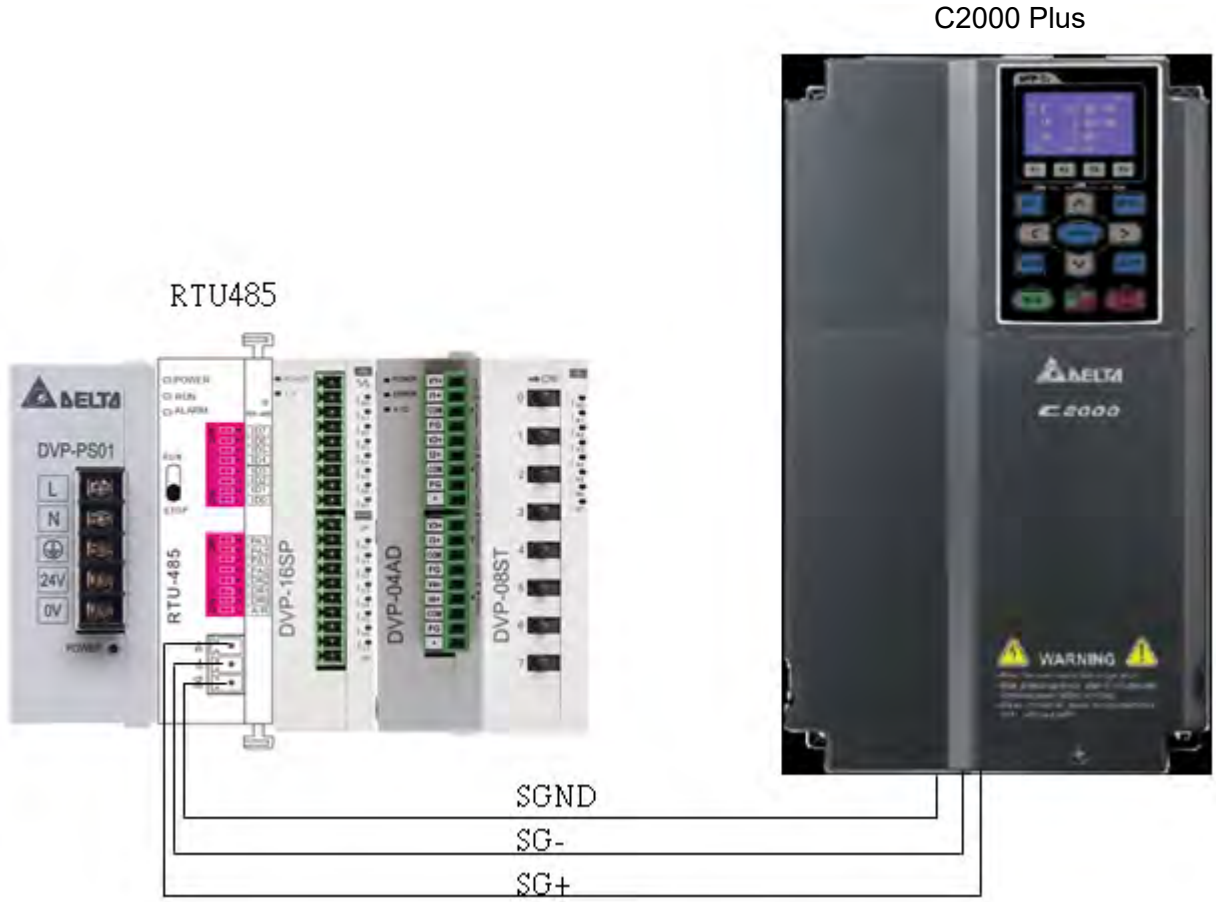

Step 4: Write to PLC program

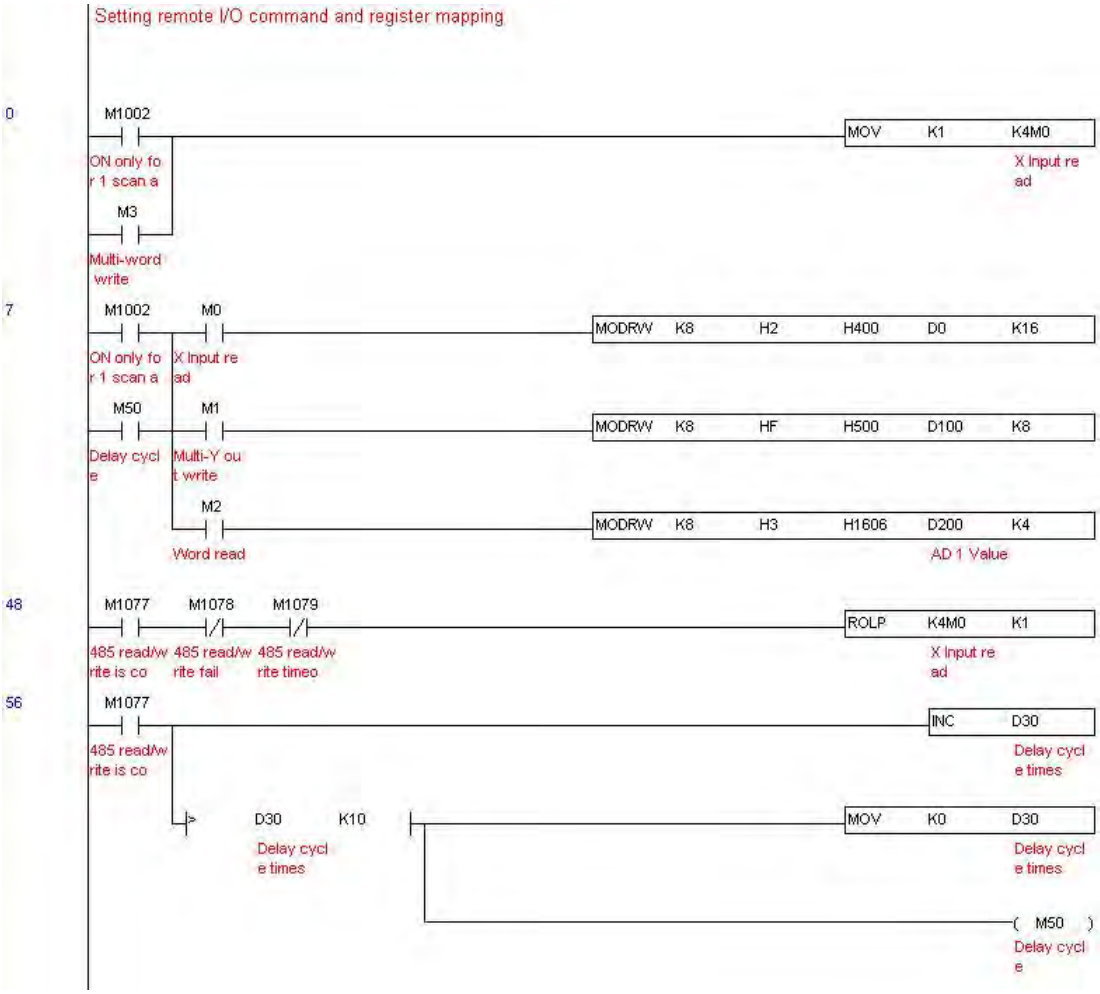

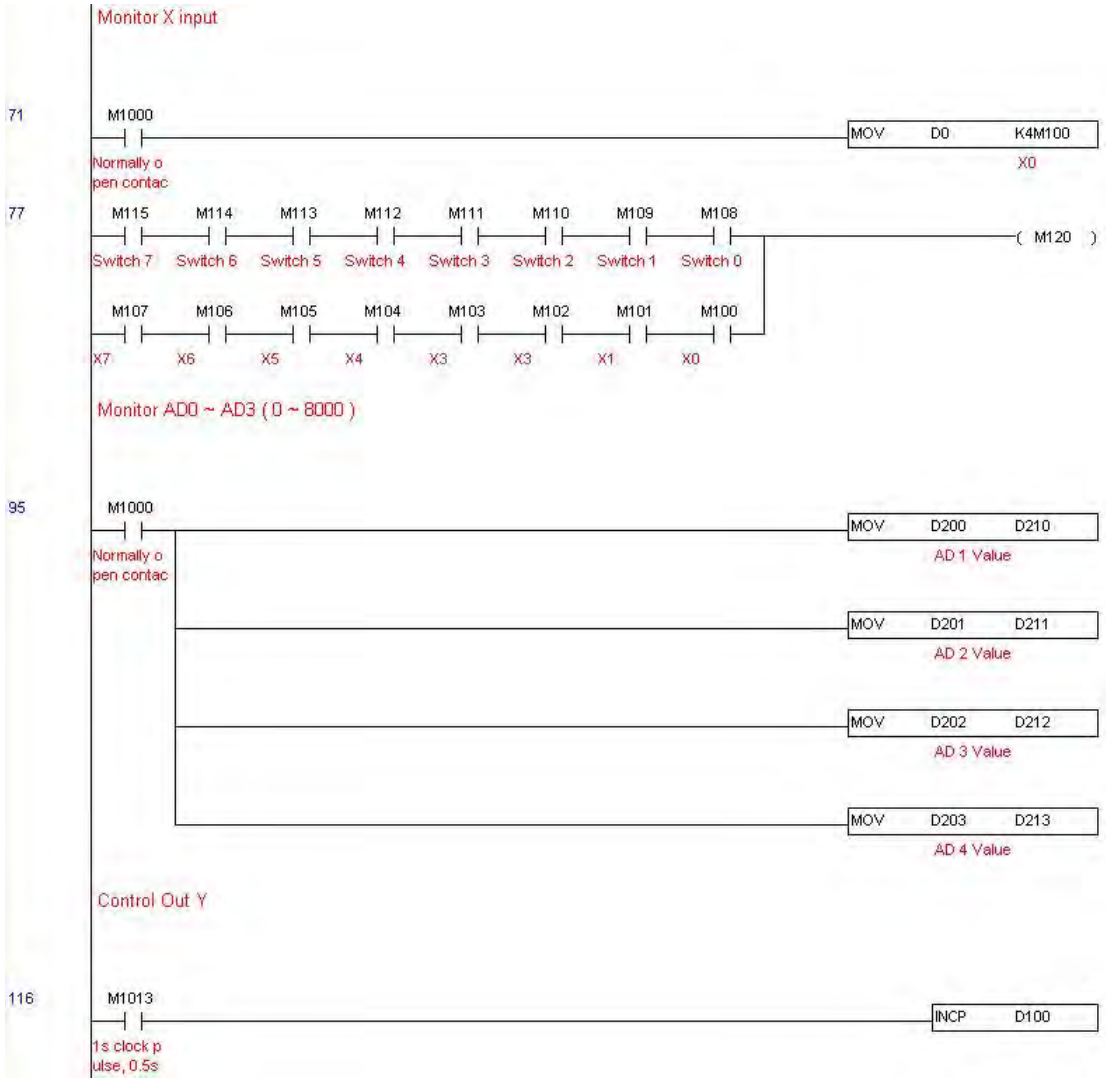
Monitor X input
71
M1000
Normally o
pen contac
MOV D0 K4M100
X0
77
M115 M114 M113 M112 M111 M110 M109 M108
Switch 7 Switch 6 Switch 5 Switch 4 Switch 3 Switch 2 Switch 1 Switch 0
(M120)
M107 M106 M105 M104 M103 M102 M101 M100
X7 X6 X5 X4 X3 X3 X1 X0
Monitor AD0 ~ AD3 (0 ~ 8000)
95
M1000
Normally o
pen contac
MOV D200 D210
AD 1 Value
MOV D201 D211
AD 2 Value
MOV D202 D212
AD 3 Value
MOV D203 D213
AD 4 Value
Control Out Y
116
M1013
1s clock p
ulse, 0.5s
INCP D100

Control DA Value (0 ~ 4000)
120
M1011
10ms clock
pulse, 5m
INCP K3M200
MOV K4M200 D300
DA 1
DECP K3M220
MOV K4M220 D301
DA 2
137
END

Step 5: Actual testing situation:

I/O testing: When the switch is activated, it can be discovered that the display corresponds to M115–M108. Furthermore, it can be seen that one output point light is added every 1 sec. (the display uses a binary format)

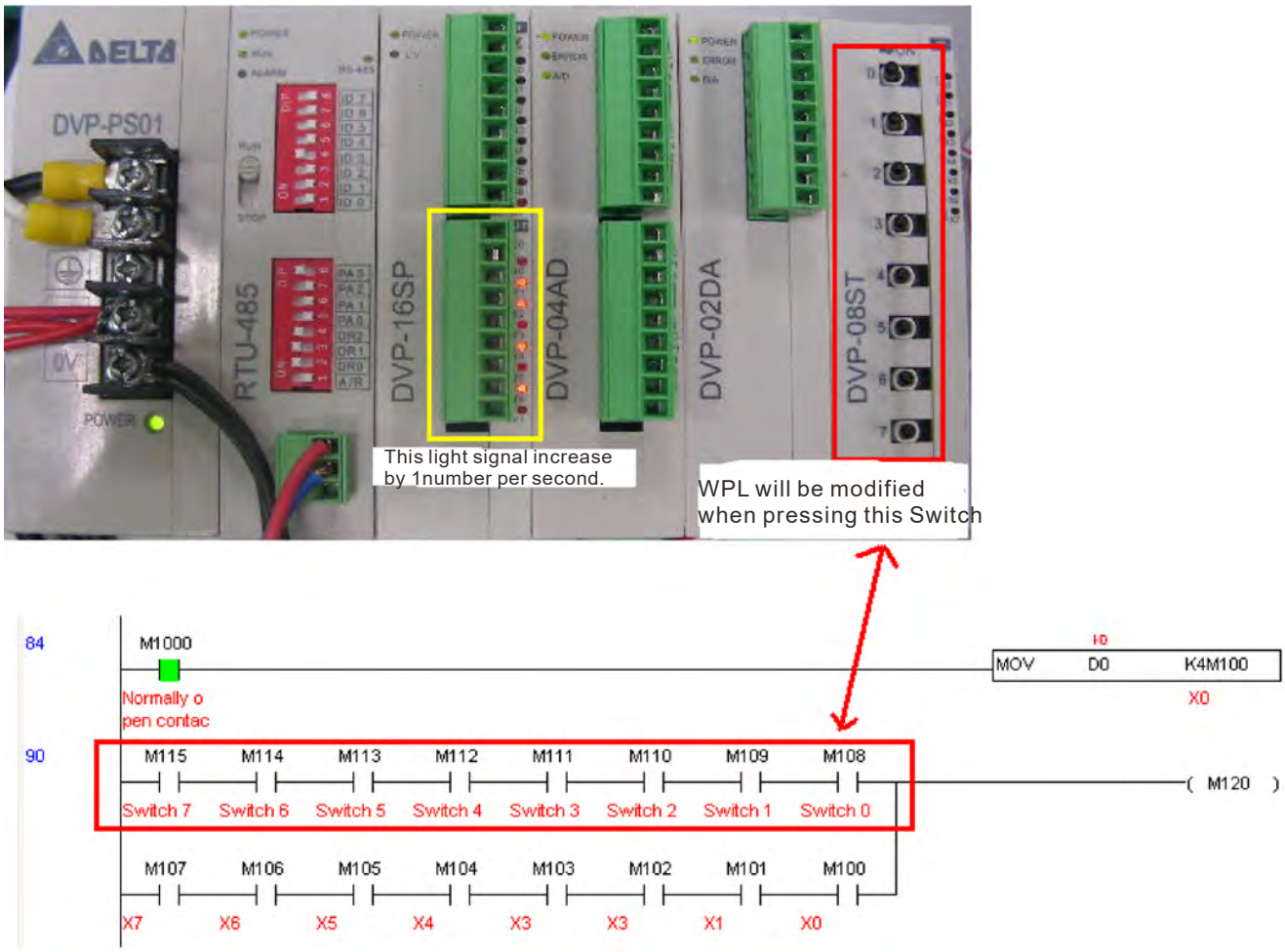

AD DA testing: It can be discovered that D200 and D201 are roughly twice the D300, and continue to increase progressively. For their part, the D202 and D203 are roughly twice the D301, and continue to decrease progressively.

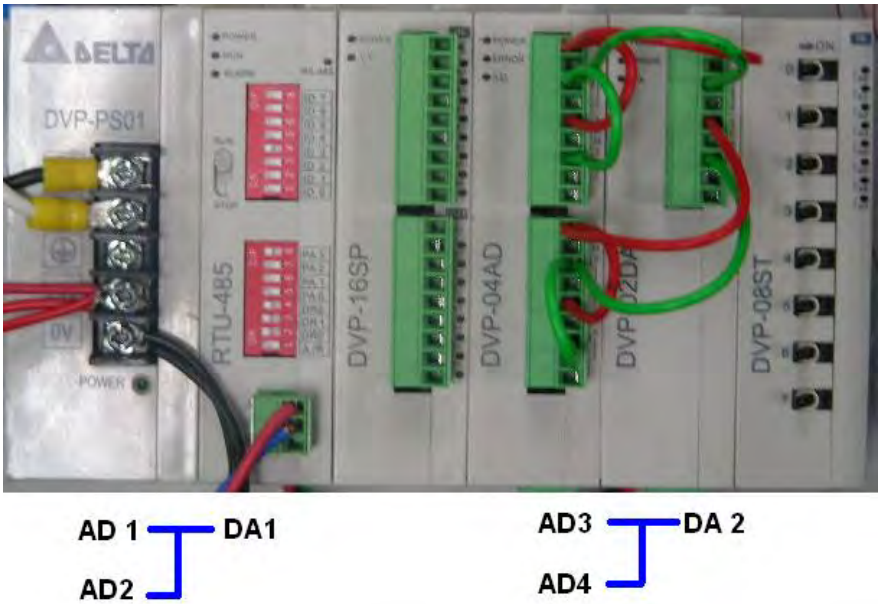

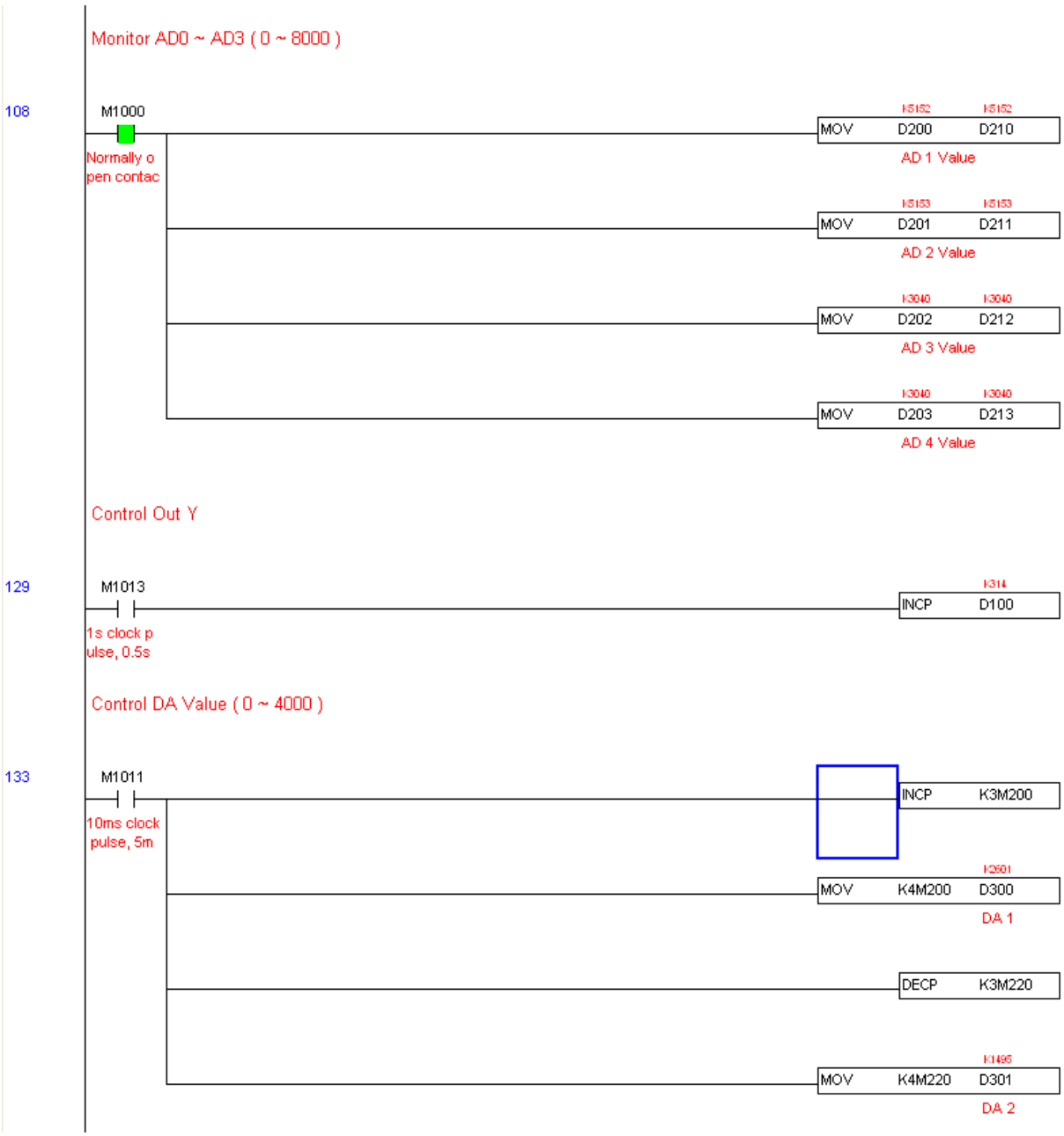
Monitor AD0 ~ AD3 (0 ~ 8000)
108
M1000
Normally o
pen contac
K5152 K5152
MOV D200 D210
AD 1 Value
K5153 K5153
MOV D201 D211
AD 2 Value
K3040 K3040
MOV D202 D212
AD 3 Value
K3040 K3040
MOV D203 D213
AD 4 Value
Control Out Y
129
M1013
1s clock p
ulse, 0.5s
K314
INCP D100
Control DA Value (0 ~ 4000)
133
M1011
10ms clock
pulse, 5m
INCP K3M200
K2501
MOV K4M200 D300
DA 1
DECP K3M220
K1495
MOV K4M220 D301
DA 2

16-13 Calendar functions

The C2000 Plus's internal PLC includes calendar functions, but these may only be used when a keypad (KPC-CC01) is connected, otherwise the function cannot be used. Currently-supported commands include TCMP (comparison of calendar data), TZCP (calendar data range comparison), TADD (calendar data addition), TSUB (calendar data subtraction), and TRD (calendar reading). Please refer to the explanation of relevant commands and functions for the usage of these commands.

In real applications, the internal PLC can judge whether calendar function have been activated; if they have been activated, calendar warning codes may be displayed in some situations. The basis for whether a calendar function has been activated is whether the program has written the calendar time (D1063 to D1069) in connection with the foregoing calendar commands or programs.

The calendar's time display is currently assigned to D1063 to D1069, and is defined as follows:

Special D	Item	Content	Attributes
D1063	Year (Western)	20xx (2000–2099)	RO
D1064	Weeks	1–7	RO
D1065	Month	1–12	RO
D1066	Day	1–31	RO
D1067	Hour	0–23	RO
D1068	Minute	0–59	RO
D1069	Second	0–59	RO

Calendar-related special M items are defined as follows:

Special D	Item	Attributes
M1068	Calendar time error	RO
M1076	Calendar time error or refresh time out	RO
M1036	Ignore calendar warning	RW

*When a program writes to the commands TCMP, TZCP, TADD, or TSUB, if it is discovered that a value exceeds the reasonable range, M1026 will be 1.

*When the keypad display is PLra (RTC correction warning) or PLrt (RTC time out warning), M1076 will be ON.

*When M1036 is 1, the PLC will ignore the calendar warning.

Calendar trigger warning code is defined as follows:

Warning	Description	Reset approach	Whether it affects PLC operation
PLra	Calendar time correction	Requires power restart	Will not have any effect
PLrt	Calendar time refresh time out	Requires power restart	Will not have any effect

*When the PLC's calendar functions are operating, if the keypad is replaced with another keypad, it will jump to PLra.

*When it is discovered at startup that the keypad has not been powered for more than 7 days, or the time is wrong, PLra will be triggered.

*When it is discovered that the C2000 Plus has no keypad in 10 sec. after startup, PLrt will be

triggered.

*If the keypad is suddenly pulled out while the calendar is operating normally, and is not reconnected for more than 1 minute, PLrt will be triggered.

Practical applications:

We will perform a demo of simple applications.

We first correct the keypad time. After pressing Menu on the keypad, select the 9th time setting option. After selection, set the current time.

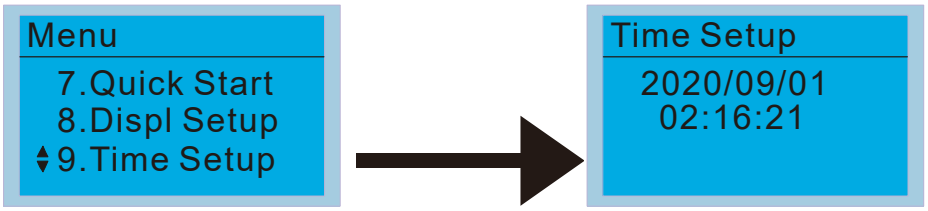

We set converter on during the period of 8:00–17:20, which allows us to write the following example

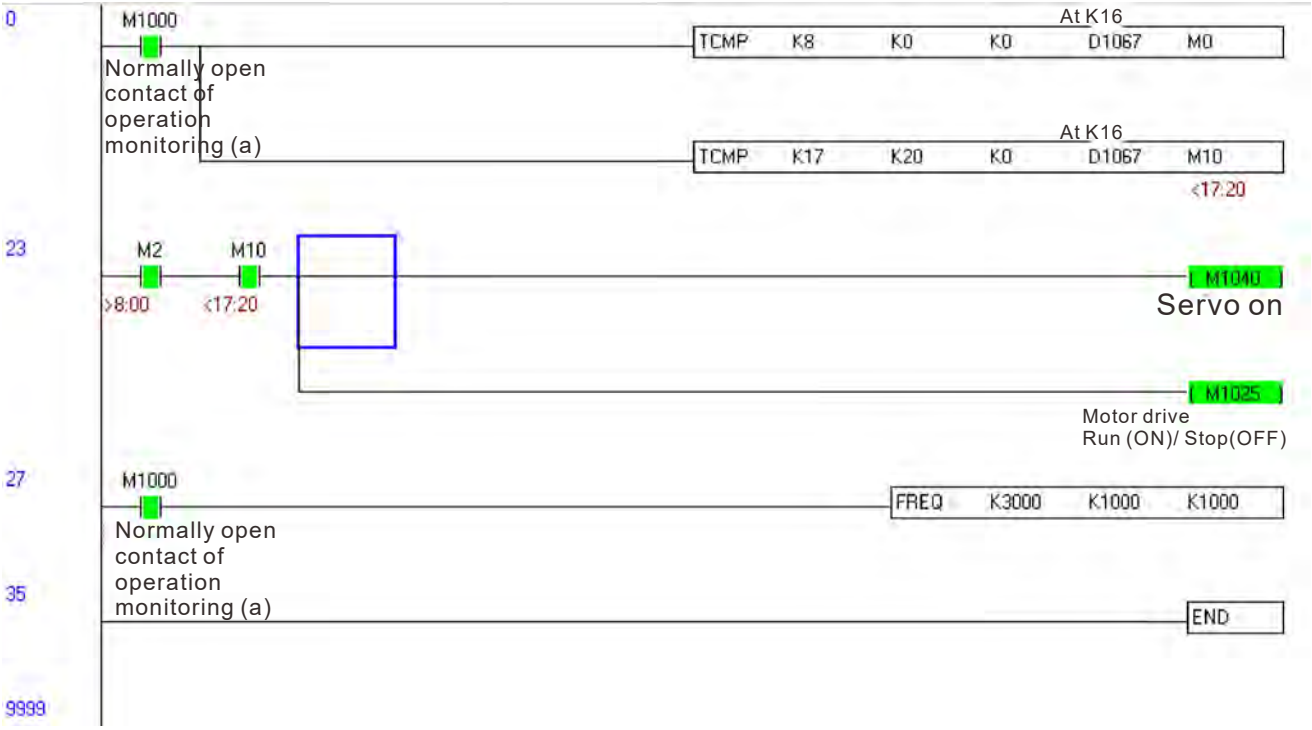

Chapter 17 Safe Torque Off Function

17-1 The Drive Safety Function Failure Rate

17-2 Safe Torque Off Terminal Function Description

17-3 Wiring Diagram

17-4 Parameter

17-5 Operating Sequence Description

17-6 New Error Code for STO Function

17-1 The Drive Safety Function Failure Rate

Item	Definition	Standard	Performance
SFF	Safe Failure Fraction	IEC61508	Channel 1: 80.08% Channel 2: 68.91%
HFT (Type A subsystem)	Hardware Fault Tolerance	IEC61508	1
SIL	Safety Integrity Level	IEC61508	SIL 2
		IEC62061	SILCL 2
PFH	Average frequency of dangerous failure [h-1]	IEC61508	9.56×10^{-10}
PFD_{av}	Probability of Dangerous Failure on Demand	IEC61508	4.18×10^{-6}
Category	Category	ISO13849-1	Category 3
PL	Performance level	ISO13849-1	d
$MTTF_d$	Mean time to dangerous failure	ISO13849-1	High
DC	Diagnostic coverage	ISO13849-1	Low

17-2 Safety Torque Off Terminal Function Description

The Safe Torque Off function (STO) is to cut off the power supply to motor through the hardware, thereby the motor couldn't produce torque.
The STO function controls the motor current driving signal through two hardware circuits respectively, and thus cut off the inverter power module output in order to achieve the status of safety stop.

Operation principle Description as following table 1:
Table 1: Terminal operation description

Signal	Channel	Photo-coupler status			
STO signal	STO1–SCM1	ON (High)	ON (High)	OFF (Low)	OFF (Low)
	STO2–SCM2	ON (High)	OFF (Low)	ON (Low)	OFF (Low)
Driver Output status		Ready	STL2 mode (Torque output off)	STL1 mode (Torque output off)	STO mode (Torque output off)

- 🕮 STO means Safe Torque Off
- 🕮 STL1–STL3 means Safe Torque Off hardware abnormal.
- 🕮 STL3 means STO1–SCM1 and STO2–SCM2 internal circuit detected abnormal.
- 🕮 STO1–SCM1 ON (High): means STO1–SCM1has connection to a $+24V_{DC}$ power supply.
- 🕮 STO2–SCM2 ON (High): means STO2–SCM2 has connection to a $+24V_{DC}$ power supply.
- 🕮 STO1–SCM1 OFF (Low): means STO1–SCM1hasn't connection to a $+24V_{DC}$ power supply.
- 🕮 STO2–SCM2 OFF (Low): means STO2–SCM2hasn't connection to a $+24V_{DC}$ power supply.

17-3 Wiring Diagram

17-3-1 Internal STO circuit as below:

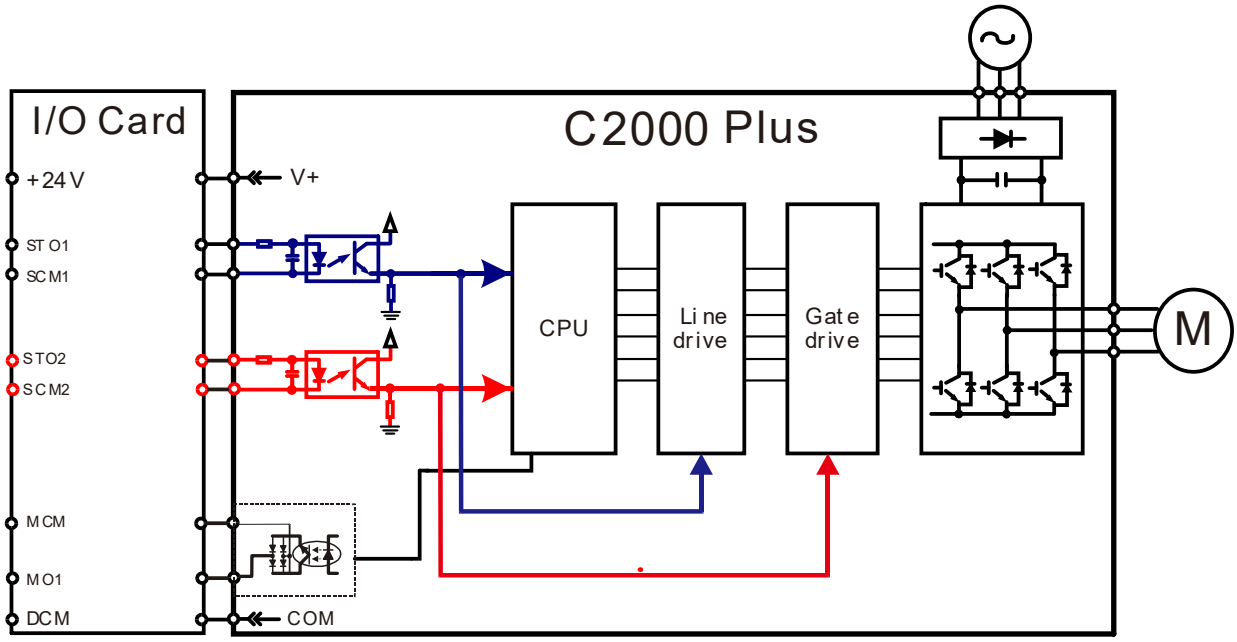

17-3-2 In the figure below, the factory setting for +24V-STO1-STO2 and SCM1-SCM2-DCM is short-circuited:

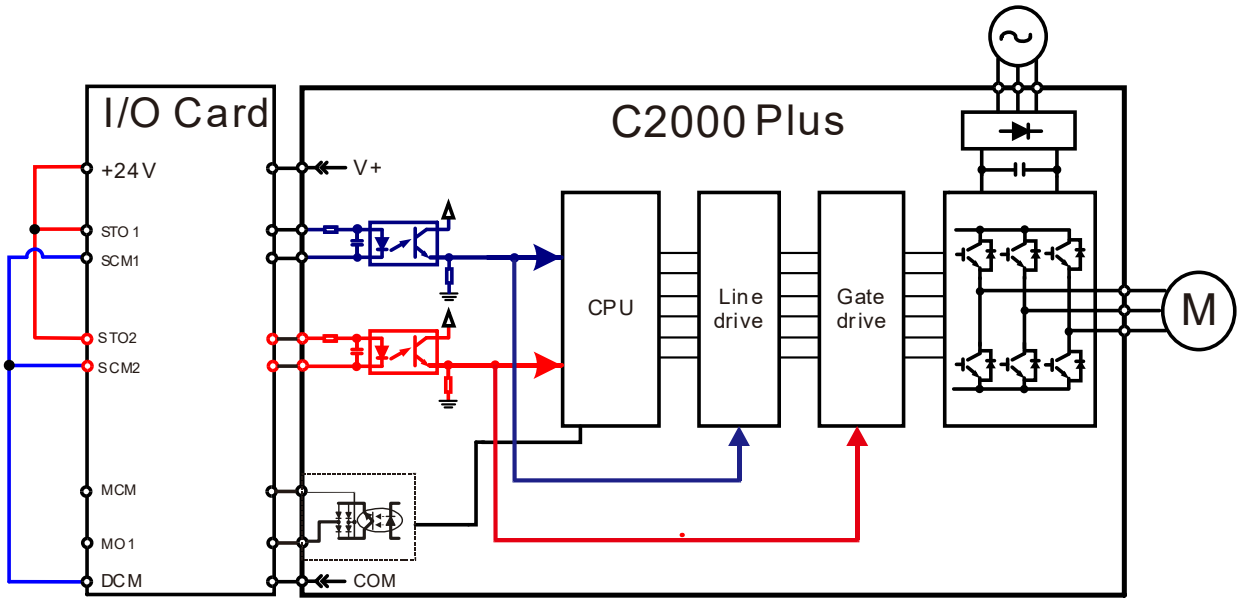

17-3-3 The control loop wiring diagram:

1. Remove the short-circuit of +24V-STO1-STO2 and DCM-SCM1-SCM2.
2. The wiring as below diagram. The ESTOP switch must at Close status in normal situation and drive will be able to Run.
3. STO mode, switch ESTOP open. Drive output stop and keypad display STO.

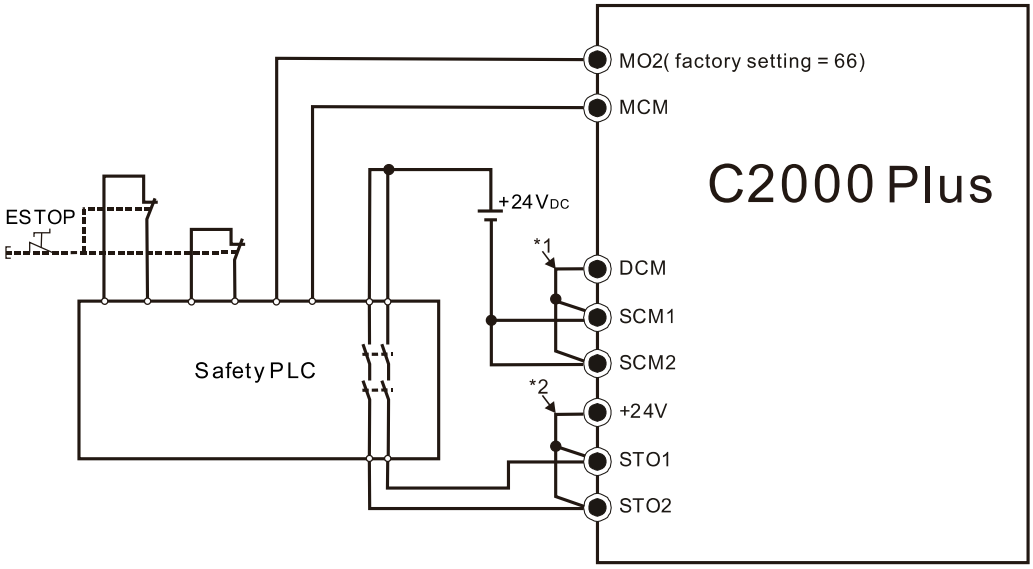

NOTE

*1: Factory short-circuit of DCM-SCM1-SCM2. Remove the short-circuit to use the Safety function.
*2: Factory short-circuit of +24V-STO1-STO2. Remove the short-circuit to use the Safety function.

17-4 Parameters

06-44 STO Alarm Latch

Default: 0

Settings 0：STO Alarm Latch
1：STO Alarm no Latch

- Pr. 06-44=0 STO Alarm Latch: after the reason of STO Alarm is cleared, a Reset command is needed to clear the STO Alarm.
- Pr. 06-44=1 STO Alarm no Latch: after the reason of STO Alarm is cleared, the STO Alarm will be cleared automatically.
- The STL1–STL3 error are all “Alarm latch” mode (in STL1–STL3 mode, the Pr. 06-44 function is no effective).

02-13 Multi-function Output 1 (Relay1)

Default:11

02-14 Multi-function Output 2 (Relay2)

Default:1

02-16 Multi-function Output 3 (MO1)

Default: 0

02-17 Multi-function Output 4 (MO2)

Default:66

Settings 66: SO N.O. output
68: SO N.C. output

Settings	Functions	Descriptions
66	SO Logic A output	Safety Output Normal Open
68	SO Logic B output	Safety Output Normal Close

- C2000 factory setting Pr. 02-17 (MO2) = 66 (N.O.) and Multi-function Output setting item adds 2 new function: 66 and 68.

Drive status	Safety Output status	
	N.O. (MO=66)	N.C. (MO=68)
Normal run	Open	Close
STO	Close	Open
STL1–STL3	Close	Open

00-04 Content of Multi-function Display

Default: 3

Settings 45: Hardware version

17-5 Operating Sequence Description

17-5-1 Normal operation status

As shown in Figure 3: When the STO1–SCM1 and STO2–SCM2=ON (no STO function is needed), the drive will execute “Operating” or “Output Stop” according to RUN/STOP command.

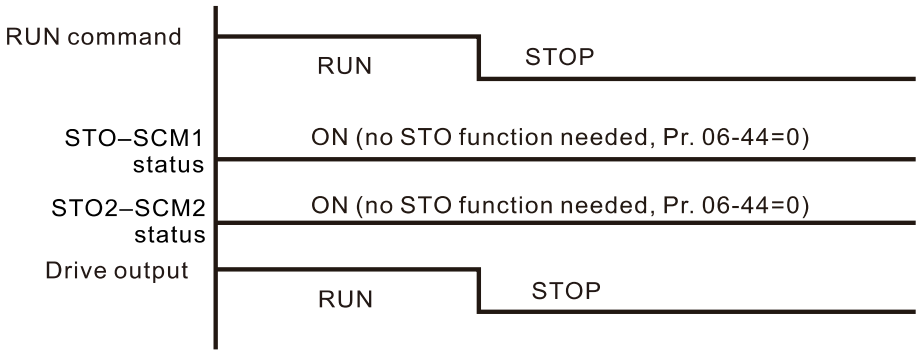

Figure 3

17-5-2-1 STO, Pr. 06-44=0, Pr. 02-35=0

As shown in Figure 4: When both of STO1–SCM1 and STO2–SCM2 channel has turned off during operating, the STO function enabling and the drive will stop output regardless of Run command is ON or OFF status.

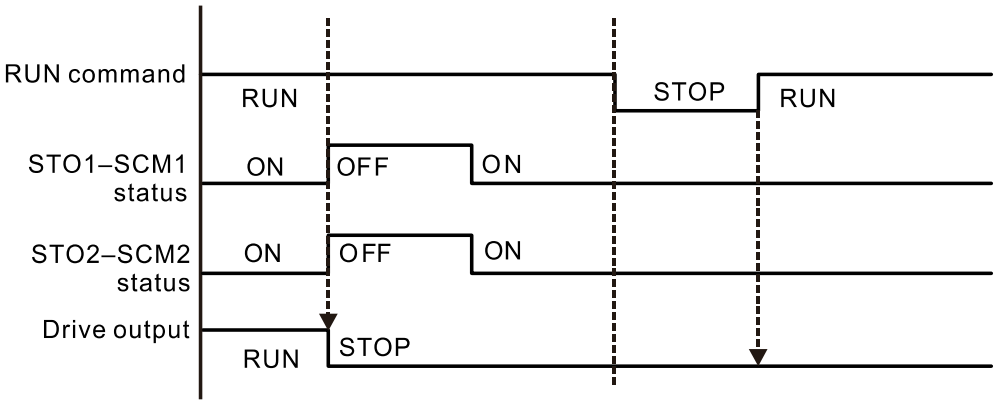

Figure 4

17-5-2-2 STO, Pr. 06-44=0, Pr. 02-35=1

As shown in Figure 5: As same as the figure 4. Because the Pr. 02-35=1, after the Reset command, if the operating command still exists, then the drive will immediately execute the run command again.

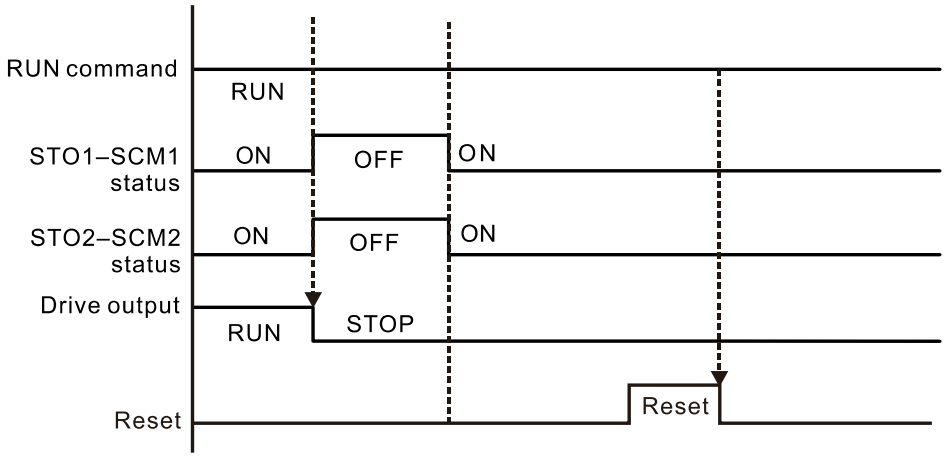

Figure 5

17-5-3 STO, Pr. 06-44=1

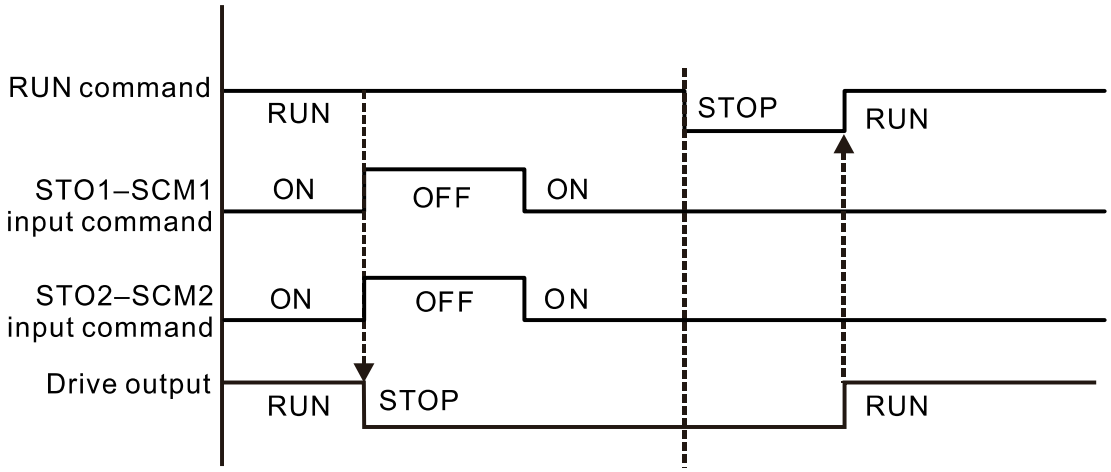

Figure 6

17-5-4 STL1

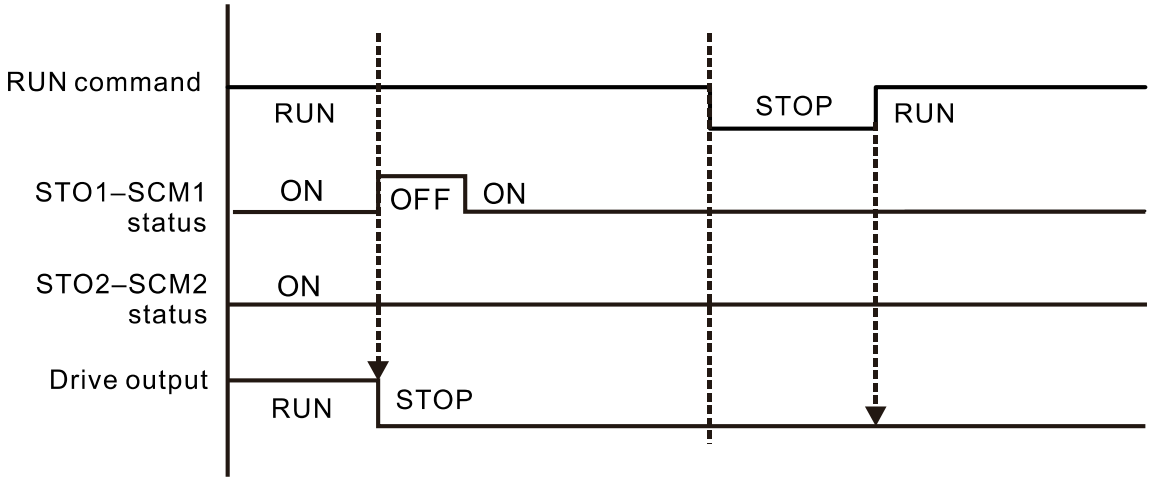

Figure 7

17-5-4 STL2

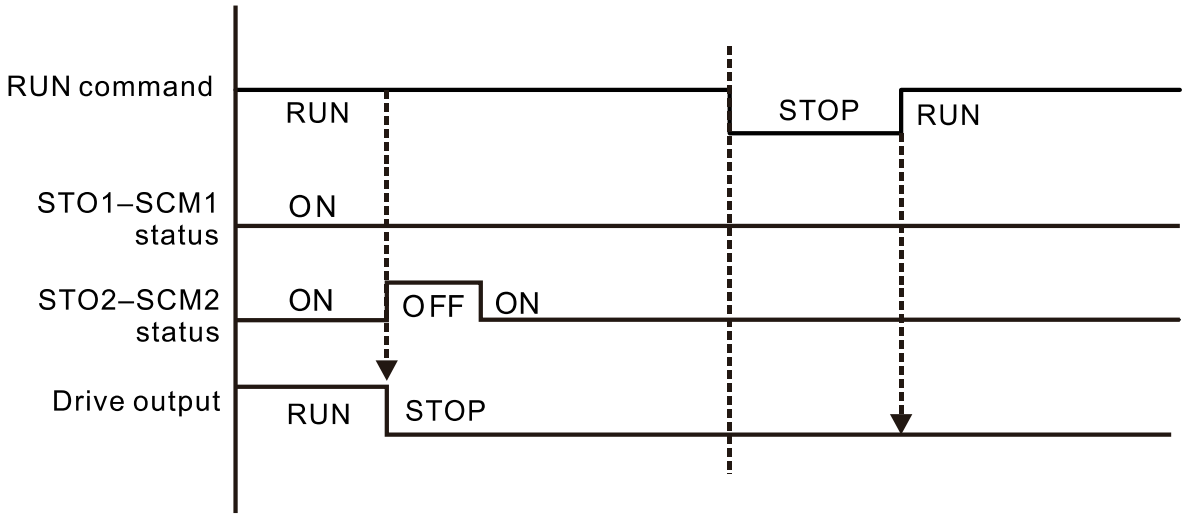

Figure 8

17-6 New Error Code for STO Function

06-17	Fault record 1
06-18	Fault record 2
06-19	Fault record 3
06-20	Fault record 4
06-21	Fault record 5
06-22	Fault record 6

Settings 72: Channel 1 (STO1–SCM1)internal hardware error
76: STO (Safe Torque Off)
77: Channel 2 (STO2–SCM2) internal hardware error
78: Channel 1 and Channel 2 internal hardware error

Error code	Name	Description
76	STO	Safe Torque Off function active
72	STL1 (STO1–SCM1)	STO1–SCM1 internal hardware detect error
77	STL2 (STO2–SCM2)	STO2–SCM2 internal hardware detect error
78	STL3	STO1–SCM1 and STO2–SCM2 internal hardware detect error

The Old/New control board and Old/New I/O card:

C2000	v1.12 firmware	v1.20 firmware
v1.12 control board + old I/O card (no STO function)	OK	OK
v1.12 control board + new I/O card (with STO function)	Error	Error
v1.20 control board + old I/O card (no STO function)	Error	Error
v1.20 control board + new I/O card (with STO function)	Error	OK