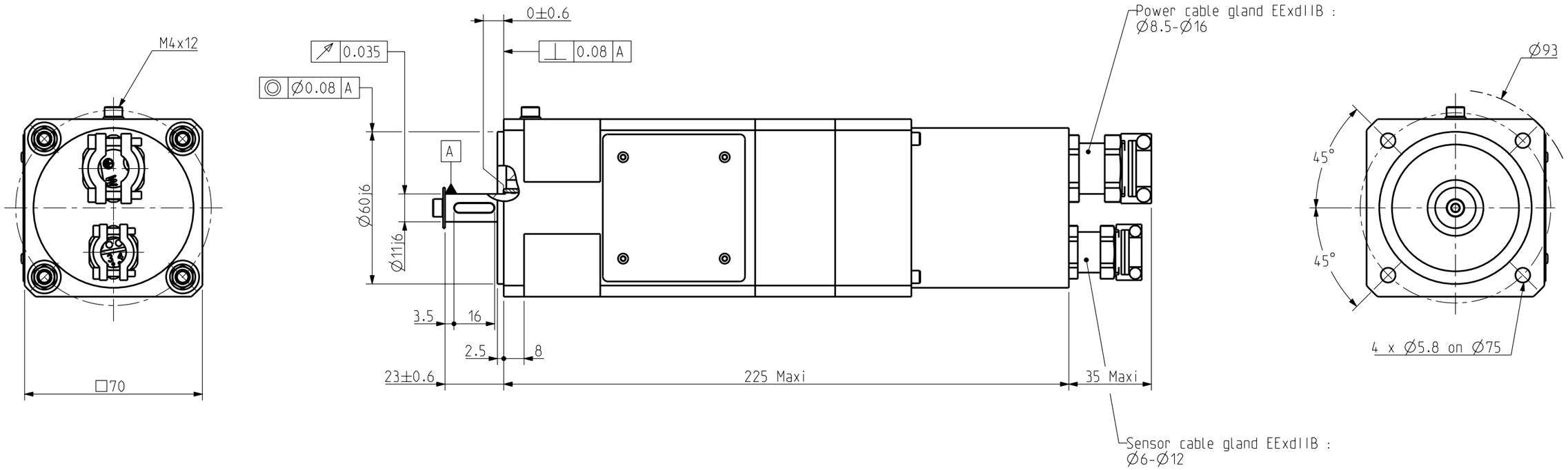


U : Phase U

V : Phase V

W : Phase W

TH- : Thermic protector

TH+ : Thermic protector

BR- : No connection

BR+ : No connection

S1 : Resolver 1

S2 : Resolver 2

S3 : Resolver 3

S4 : Resolver 4

R1 : Resolver 5

R2 : Resolver 6

B : Shield option (screw M3)

⏚ : Ground

PRINTED CIRCUIT
(under covering cap)

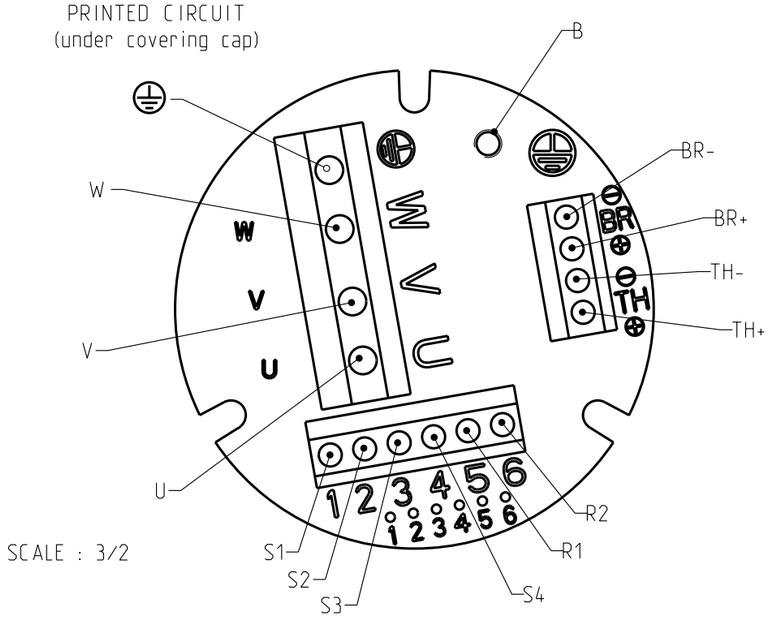


SCALE : 3/2

Protection II 2 G EEx d II B T4 :
* EN 50014 : GENERAL RULES
* EN 50018 : FLAMEPROOF "d"
Certification : INERIS 03ATEX0060X

SHAFT END

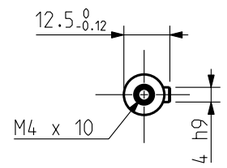


Drawing valid for :

Weight :

This document is the property of PARVEX.Transmission as well as reproduction or copy is not permitted without written authorisation.

| | | | | | |
|---|---|---|---|---|---|
| Drawn | 26/09/03 | SP | Visa | | |
| Modifications c | AM 21515 le 03/11/03 SP | | f | AM 21877 le 03/02/05 SP | |
| Modifications b | AM 21499 le 27/10/03 SP | | e | AM 21826 le 17/12/04 SP | |
| Modifications a | AM 21424 le 06/10/03 SP | | d | AM 21768 le 28/09/04 SP | |

Scale 3:5

SSD DRIVES
PARVEX
8 Avenue du lac. BP249
21007-DIJON cedex-FRANCE
www.parvex.com

# EX300

# OUTLINE DRAWING

| Format | F | E | S | G | I | |
|---|---|---|---|---|---|---|
| A3 | x | x | | | | |

344487AE1201 f