Frequency Inverter

Installation Guideline

FR-A741-5.5K to 55K

Art. No. 224739
08 04 2009
Version A

MITSUBISHI ELECTRIC INDUSTRIAL AUTOMATION

Thank you for choosing this Mitsubishi Inverter.
Please read through this Installation Manual and the Instruction Manual to operate this inverter correctly
Do not use this product until you have a full knowledge of the equipment, the safety information and the instructions.
Please forward this manual to the end user.

CONTENTS

【1】 INSTALLATION OF THE INVERTER AND INSTRUCTIONS 1
【2】 OUTLINE DIMENSION DRAWING 3
【3】 WIRING 4
【4】 PRECAUTIONS FOR THE USEOF THE INVERTER 9
【5】 FAILSAFE OF THE SYSTEM WHICH USES THE INVERTER 11
【6】 PARAMETER 12
【7】 TROUBLESHOOTING 22
【A】 APPENDIX 24

Print Date	Manual Number	Revision
04/2009 pdp-gb	224739	First edition

⚠ For Maximum Safety

- Mitsubishi transistorized inverters are not designed or manufactured to be used in equipment or systems in situations that can affect or endanger human life.
- When considering this product for operation in special applications such as machinery or systems used in passenger transportation, medical, aerospace, atomic power, electric power, or submarine repeating applications, please contact your nearest Mitsubishi sales representative.
- Although this product was manufactured under conditions of strict quality control, you are strongly advised to install safety devices to prevent serious accidents when it is used in facilities where breakdowns of the product are likely to cause a serious accident.
- Please do not use this product for loads other than three-phase induction motors.
- Please check upon receiving of the inverter whether this Installation Guideline corresponds to the delivered inverter. Compare the specifications on the capacity plate with the specifications given in this Installation Guideline.

This section is specifically about safety matters

Do not attempt to install, operate, maintain or inspect the inverter until you have read through this Installation Guideline and appended documents carefully and can use the equipment correctly. Do not use the inverter until you have a full knowledge of the equipment, safety information and instructions. In this Installation Guideline, the safety instruction levels are classified into "WARNING" and "CAUTION".

⚠WARNING Assumes that incorrect handling may cause hazardous conditions, resulting in death or severe injury.

⚠CAUTION Assumes that incorrect handling may cause hazardous conditions, resulting in medium or slight injury, or may cause physical damage only.

Note that even the ⚠CAUTION level may lead to a serious consequence according to conditions. Please follow strictly the instructions of both levels because they are important to personnel safety.

Electric Shock Prevention

⚠WARNING

- While power is on or when the inverter is running, do not open the front cover or wiring cover. Otherwise you may get an electric shock.
- Do not run the inverter with the front cover removed. Otherwise, you may access the exposed high-voltage terminals or the charging part of the circuitry and get an electric shock.
- Even if power is off, do not remove the front cover except for wiring or periodic inspection.You may access the charged inverter circuits and get an electric shock.
- Before starting wiring or inspection, check to make sure that the operation panel indicator is off, wait for at least 10 minutes after the power supply has been switched off, and check that there are no residual voltage using a tester or the like. The capacitor is charged with high voltage for some time after power off and it is dangerous.
- This inverter must be earthed (grounded). Earthing (Grounding) must conform to the requirements of national and local safety regulations and electrical codes. (NEC section 250, IEC 536 class 1 and other applicable standards)
- Any person who is involved in the wiring or inspection of this equipment should be fully competent to do the work.
- Always install the inverter before wiring. Otherwise, you may get an electric shock or be injured.
- Perform setting dial and key operations with dry hands to prevent an electric shock. Otherwise you may get an electric shock.
- Do not subject the cables to scratches, excessive stress, heavy loads or pinching. Otherwise you may get an electric shock.
- Do not replace the cooling fan while power is on. It is dangerous to replace the cooling fan while power is on.
- Do not touch the printed circuit board with wet hands. You may get an electric shock.
- When measuring the main circuit capacitor capacity, the DC voltage is applied to the motor for 1s at powering off. Never touch the motor terminal, etc. right after powering off to prevent an electric shock.

Fire Prevention

⚠CAUTION

- Install the inverter on a nonflammable wall without holes (so that nobody can touch the inverter heatsink on the rear side, etc.). Mounting it to or near combustible material can cause a fire.
- If the inverter has become faulty, switch off the inverter power. A continuous flow of large current could cause a fire.
- When using a brake resistor, make up a sequence that will turn off power when an alarm signal is output. Otherwise, the brake resistor may excessively overheat due to damage of the brake transistor and such, causing a fire.
- Do not connect a resistor directly to the DC terminals P, N. This could cause a fire and destroy the inverter. The surface temperature of braking resistors can far exceed 100°C for brief periods. Make sure that there is adequate protection against accidental contact and a safe distance is maintained to other units and system parts.

Injury Prevention

⚠CAUTION

- Apply only the voltage specified in the instruction manual to each terminal. Otherwise, burst, damage, etc. may occur.
- Ensure that the cables are connected to the correct terminals. Otherwise, burst, damage, etc. may occur.
- Always make sure that polarity is correct to prevent damage, etc. Otherwise, burst, damage, etc. may occur.
- While power is on or for some time after power-off, do not touch the inverter as it is hot and you may get burnt.

Additional Instructions

Also note the following points to prevent an accidental failure, injury, electric shock, etc.

Transportation and Installation

⚠ CAUTION

- Transport the product using the correct method that corresponds to the weight. Failure to observe this could lead to injuries.
- Do not stack the inverter boxes higher than the number recommended.
- Ensure that installation position and material can withstand the weight of the inverter. Install according to the information in the instruction manual.
- Do not install or operate the inverter if it is damaged or has parts missing. This can result in breakdowns.
- When carrying the inverter, do not hold it by the front cover or setting dial; it may fall off or fail.
- Do not stand or rest heavy objects on the product.
- Check the inverter mounting orientation is correct.
- Prevent other conductive bodies such as screws and metal fragments or other flammable substance such as oil from entering the inverter.
- As the inverter is a precision instrument, do not drop or subject it to impact.
- Use the inverter under the following environmental conditions. Otherwise, the inverter may be damaged.

Operating condition	Ambient temperature	–10°C to +50°C (non-freezing)
	Ambient humidity	90% RH or less (non-condensing)
	Storage temperature	–20°C to +65°C ①
	Atmosphere	Indoors (free from corrosive gas, flammable gas, oil mist, dust and dirt)
	Altitude	Maximum 1000m above sea level for standard operation.
	Vibration	5.9m/s² or less

① Temperature applicable for a short time, e.g. in transit.

Wiring

⚠CAUTION

- Do not install assemblies or components (e. g. power factor correction capacitors) on the inverter output side, which are not approved from Mitsubishi.
- The direction of rotation of the motor corresponds to the direction of rotation commands (STF/STR) only if the phase sequence (U, V, W) is maintained.

Test operation and adjustment

⚠CAUTION

- Before starting operation, confirm and adjust the parameters. A failure to do so may cause some machines to make unexpected motions.

Operation

⚠WARNING

- When you have chosen the retry function, stay away from the equipment as it will restart suddenly after an alarm stop.
- The STOP RESET key is valid only when the appropriate function setting has been made. Prepare an emergency stop switch separately to make an emergency stop (power off, mechanical brake operation for emergency stop, etc).
- Make sure that the start signal is off before resetting the inverter alarm. A failure to do so may restart the motor suddenly.
- The inverter can be started and stopped via the serial port communications link or the field bus. However, please note that depending on the settings of the communications parameters it may not be possible to stop the system via these connections if there is an error in the communications system or the data line. In configurations like this it is thus essential to install additional safety hardware that makes it possible to stop the system in an emergency (e.g. controller inhibit via control signal, external motor contactor etc). Clear and unambiguous warnings about this must be posted on site for the operating and service staff.
- Performing pre-excitation (LX signal and X13 signal) under torque control (real sensorless vector control) may start the motor running at a low speed even when the start command (STF or STR) is not input. The motor may run also at a low speed when the speed limit value = 0 with a start command input. Perform pre-excitation after making sure that there will be no problem in safety if the motor runs.
- The load used should be a three-phase induction motor only. Connection of any other electrical equipment to the inverter output may damage the inverter as well as the equipment.
- Do not modify the equipment.
- Do not perform parts removal which is not instructed in this manual. Doing so may lead to fault or damage of the inverter.

⚠CAUTION

- The electronic thermal relay function does not guarantee protection of the motor from overheating.
- Do not use a magnetic contactor on the inverter input for frequent starting/stopping of the inverter.
- Use a noise filter to reduce the effect of electromagnetic interference and follow the accepted EMC procedures for proper installation of frequency inverters. Otherwise nearby electronic equipment may be affected.
- Take appropriate measures regarding harmonics. Otherwise this can endanger compensation systems or overload generators.
- When a 400V class motor is inverter-driven, please use an insulation-enhanced motor or measures taken to suppress surge voltages. Surge voltages attributable to the wiring constants may occur at the motor terminals, deteriorating the insulation of the motor.
- When parameter clear or all clear is performed, set again the required parameters before starting operations. Each parameter returns to the initial value.
- The inverter can be easily set for high-speed operation. Before changing its setting, fully examine the performances of the motor and machine.
- The DC braking function of the frequency inverter is not designed to continuously hold a load. Use an electro-mechanical holding brake on the motor for this purpose.
- Before running an inverter which had been stored for a long period, always perform inspection and test operation.
- For prevention of damage due to static electricity, touch nearby metal before touching this product to eliminate static electricity from your body.

Emergency stop

⚠CAUTION

- Provide a safety backup such as an emergency brake which will prevent the machine and equipment from hazardous conditions if the inverter fails.
- When the breaker on the inverter primary side trips, check for the wiring fault (short circuit), damage to internal parts of the inverter, etc. Identify the cause of the trip, then remove the cause and power on the breaker.
- When the protective function is activated (i. e. the frequency inverter switches off with an error message), take the corresponding corrective action as described in the inverter manual, then reset the inverter, and resume operation.

Maintenance, inspection and parts replacement

⚠CAUTION

- Do not carry out a megger (insulation resistance) test on the control circuit of the inverter.

Disposing of the inverter

⚠CAUTION

- Treat as industrial waste.

General instructions

Many of the diagrams and drawings in instruction manuals show the inverter without a cover, or partially open. Never run the inverter in this status. Always replace the cover and follow instruction manuals when operating the inverter.

1 INSTALLATION OF THE INVERTER AND INSTRUCTIONS

Unpack the inverter and check the capacity plate on the front cover and the rating plate on the inverter side face to ensure that the product agrees with your order and the inverter is intact.

1.1 Inverter Type

FR - A741 - 5.5 - K

Symbol	Voltage Class
A741	Three-phase 400V class

Symbol	Type number
5.5 to 55	Indicate inverter capacity [kW]

Capacity plate example

Capacity plate

FR-A741-5.5-K ← **Inverter type**

SERIAL : XXXXXX ← **Serial number**

Rating plate example

Rating plate

MITSUBISHI INVERTER

Inverter type → MODEL FR-A741-5.5-K

Input rating → INPUT : XXXXX

Output rating → OUTPUT : XXXXX

Serial number → SERIAL :

PASSED

1.2 Installation of the inverter

Enclosure surface mounting

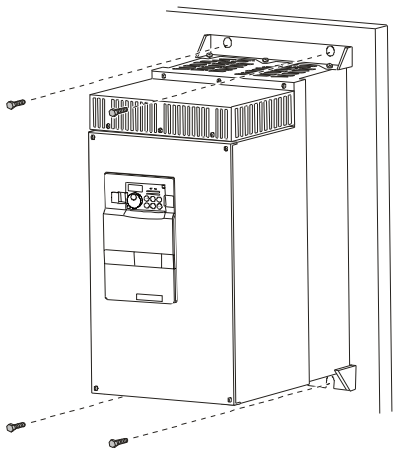

CAUTION

- When encasing multiple inverters, install them in parallel as a cooling measure.
- Install the inverter vertically.

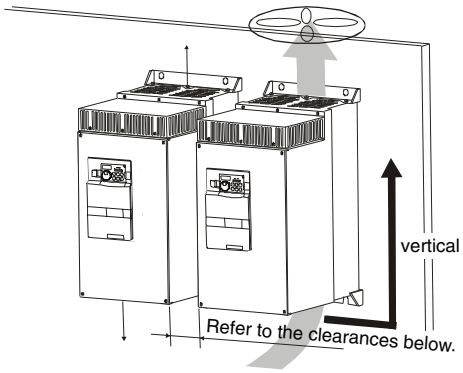

Ambient air temperature and humidity

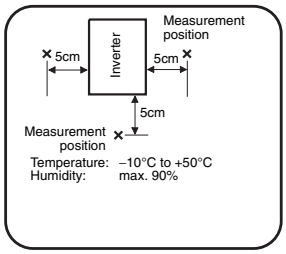

Leave enough clearances and take cooling measures.

Clearances (side)

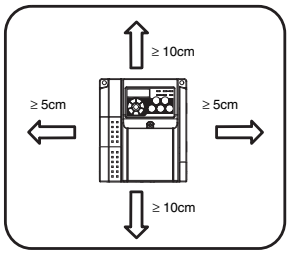

Clearances (front)

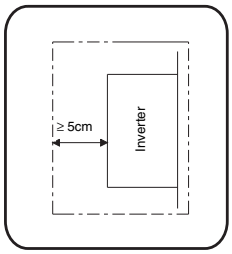

1.3 General Precaution

The bus capacitor discharge time is 10 minutes. Before starting wiring or inspection, switch power off, wait for more than 10 minutes, and check for residual voltage between terminal P/+ and N/– with a meter etc., to avoid a hazard of electrical shock.

1.4 Environment

Before installation, check that the environment meets following specifications.

Ambient temperature	–10°C to +50°C (non-freezing)
Ambient humidity	90 % RH or less (non-condensing)
Atmosphere	Free from corrosive and explosive gases, free from dust and dirt
Maximum altitude	Maximum 1000 m above sea level
Vibration	5.9m/s² or less

CAUTION

- Install the inverter on a strong surface securely and vertically with bolts.
- Leave enough clearances and take cooling measures.
- Avoid places where the inverter is subjected to direct sunlight, high temperature and high humidity.
- Install the inverter on a non-combustible surface.

2 OUTLINE DIMENSION DRAWING

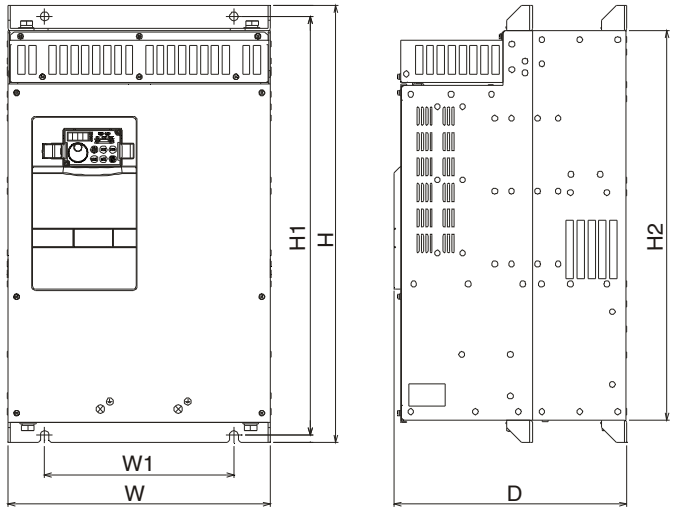

(Unit: mm)

Inverter Type	W	W1	H	H1	H2	D
FR-A741-5.5K	250	190	470	454	425	270
FR-A741-7.5K						
FR-A741-11K	300	220	600	575	540	294
FR-A741-15K						
FR-A741-18.5K	360	260	600	575	535	320
FR-A741-22K						
FR-A741-30K	450	350	700	675	635	340
FR-A741-37K	470	370	700	670	630	368
FR-A741-45K						
FR-A741-55K	600	480	900	870	830	405

3 WIRING

3.1 Terminal connection diagram

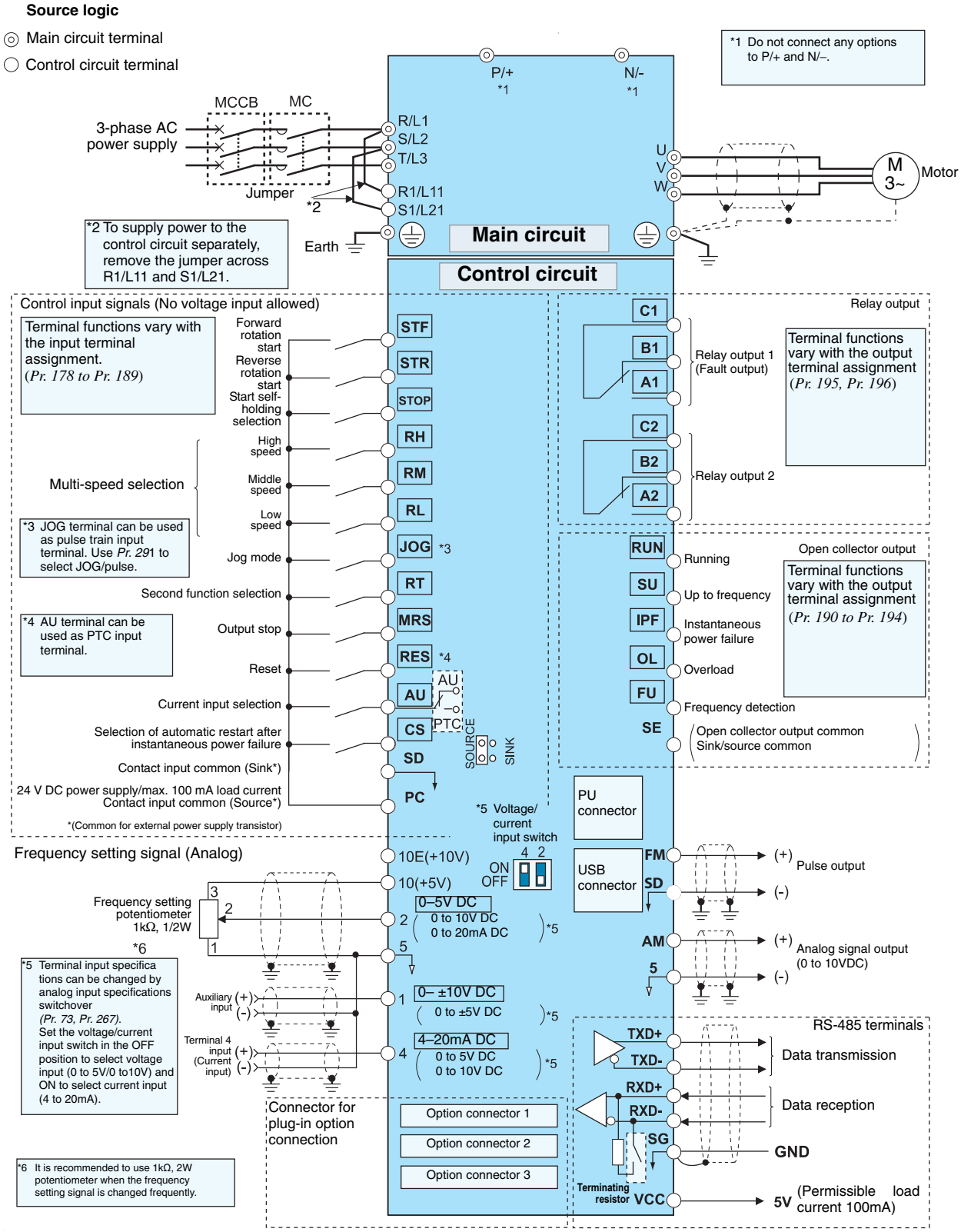

CAUTION

- To prevent a malfunction due to noise, keep the signal cables more than 10cm away from the power cables. Also separate the main circuit wire of the input side and the output side.
- After wiring, wire offcuts must not be left in the inverter. Wire offcuts can cause an alarm, failure or malfunction. Always keep the inverter clean. When drilling mounting holes in an enclosure etc., take care not to allow chips and other foreign matter to enter the inverter.
- Set the voltage/current input switch correctly. Different setting may cause a fault, failure or malfunction.

3.2 Main circuit terminal specifications

3.2.1 Terminal arrangement of the main circuit terminal, power supply and the motor wiring

FR-A741-5.5K, 7.5K

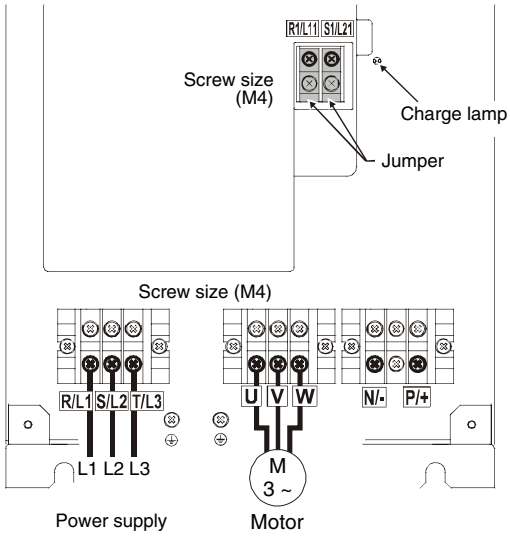

FR-A741-11K, 15K

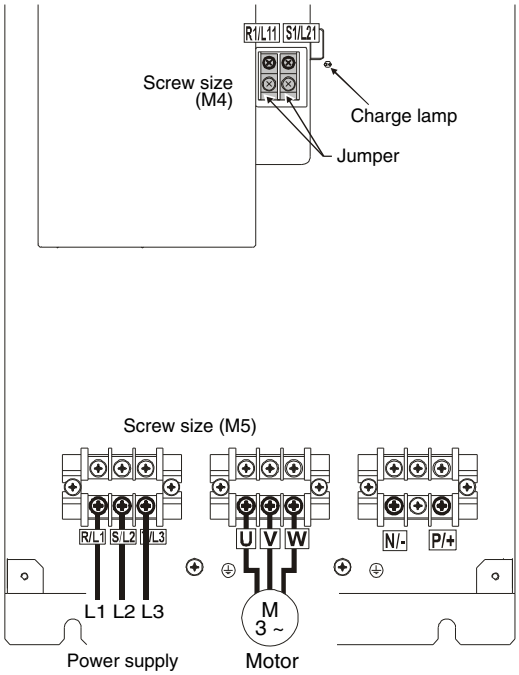

FR-A741-18.5K to 45K

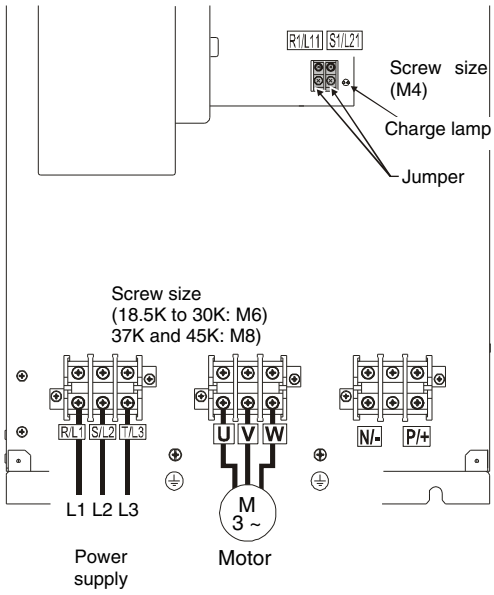

FR-A741-55K

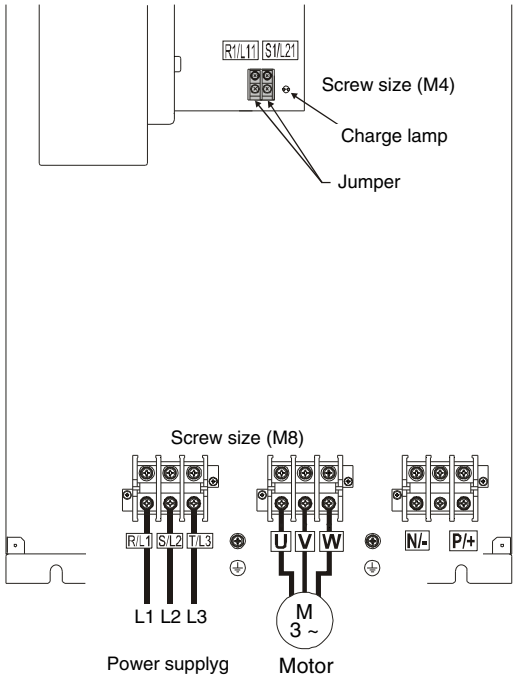

ACHTUNG

- The power supply cables must be connected to R/L1, S/L2, T/L3. (Phase sequence needs not to be matched.) Never connect the power cable to the U, V, W of the inverter. Doing so will damage the inverter.
- Connect the motor to U, V, W. At this time turning on the forward rotation switch (signal) rotates the motor in the clockwise direction when viewed on the motor shaft.

3.3 Cables and wiring length

3.3.1 Applied cable size

Select the recommended cable size to ensure that a voltage drop will be 2% max.

If the wiring distance is long between the inverter and motor, a main circuit cable voltage drop will cause the motor torque to decrease especially at the output of a low frequency.

The following table indicates a selection example for the wiring length of 20m.

400V class (when input power supply is 440V)

Applicable Inverter Type	Terminal Screw Size *1	Tightening Torque [Nm]	Crimping Terminal	
			R/L1, S/L2, T/L3, P1, +	U, V, W
FR-A741-5.5K	M4	1.5	2-4	2-4
FR-A741-7.5K	M4	1.5	5.5-4	5.5-4
FR-A741-11K	M5	2.5	5.5-5	5.5-5
FR-A741-15K	M5	2.5	8-5	8-5
FR-A741-18.5K	M6	4.4	14-6	8-6
FR-A741-22K	M6	4.4	14-6	14-6
FR-A741-30K	M6	4.4	22-6	22-6
FR-A741-37K	M8	7.8	22-8	22-8
FR-A741-45K	M8	7.8	38-8	38-8
FR-A741-55K	M8	7.8	60-8	60-8

*1 The terminal screw size indicates the terminal size for R/L1, S/L2, T/L3, U, V, W, and a screw for earthing (grounding).

Selection example for the wiring length of 20m

Applicable Inverter Type	Cable Sizes							
	HIV [mm²] *1			AWG ([mm²]) *2		PVC [mm²] *3		
	R/L1, S/L2, T/L3, P1, +	U, V, W	Earth Cable	R/L1, S/L2, T/L3, P1, +	U, V, W	R/L1, S/L2, T/L3, P1, +	U, V, W	Earth Cable
FR-A741-5.5K	2	2	3.5	12 (3.3)	14 (2.1)	2.5	2.5	4
FR-A741-7.5K	3.5	3.5	3.5	12 (3.3)	12 (3.3)	4	4	4
FR-A741-11K	5.5	5.5	8	10 (5.3)	10 (5.3)	6	6	10
FR-A741-15K	8	8	8	8 (8.4)	8 (8.4)	10	10	10
FR-A741-18.5K	14	8	14	6 (13.3)	8 (8.4)	16	10	16
FR-A741-22K	14	14	14	6 (13.3)	6 (13.3)	16	16	16
FR-A741-30K	22	22	14	4 (21.1)	4 (21.1)	25	25	16
FR-A741-37K	22	22	14	4 (21.1)	4 (21.1)	25	25	16
FR-A741-45K	38	38	22	1 (42.4)	2 (33.6)	50	50	25
FR-A741-55K	60	60	22	1/0 (42.4/53.4)		50	50	25

*1 The recommended cable size is that of the HIV cable (600V class 2 vinyl-insulated cable) with continuous maximum permissible temperature of 75°C. Assumes that the ambient temperature is 50°C or less and the wiring distance is 20m or less.

*2 For the 45K or less, the recommended cable size is that of the cable (THHW cable) with continuous maximum permissible temperature of 75°C. Assumes that the surrounding air temperature is 40°C or less and the wiring distance is 20m or less.
For the 55K, the recommended cable size is that of the cable (THHN cable) with continuous maximum permissible temperature of 90°C. Assumes that the surrounding air temperature is 40°C or less and wiring is performed in an enclosure. (Selection example for use mainly in the United States (AWG = American Wire Gauge). The values in parentheses indicate the cable sizes in mm².)

*3 For the 45K or less, the recommended cable size is that of the cable (PVC cable) with continuous maximum permissible temperature of 70°C. Assumes that the ambient temperature is 40°C or less and the wiring distance is 20m or less.
For the 55K, the recommended cable size is that of the cable (XLPE cable) with continuous maximum permissible temperature of 90°C. Assumes that the ambient temperature is 40°C or less and wiring is performed in an enclosure. (Selection example for use mainly in Europe.)

NOTE

- Tighten the terminal screw to the specified torque. A screw that has been tighten too loosely can cause a short circuit or malfunction. A screw that has been tighten too tightly can cause a short circuit or malfunction due to the unit breakage.
- Use crimping terminals with insulation sleeve to wire the power supply and motor.

The line voltage drop can be calculated by the following expression:

$$\text{line voltage drop [V]} = \frac{\sqrt{3} \times \text{wire resistance [m}\Omega\text{/m]} \times \text{wiring distance [m]} \times \text{current [A]}}{1000}$$

Use a larger diameter cable when the wiring distance is long or when it is desired to decrease the voltage drop (torque reduction) in the low speed range.

3.3.2 Maximum permissible motor wiring length

The overall wiring length for connection of a single motor or multiple motors should be within 500m. (The wiring length should be 100m maximum for vector control.)

The lengths in the following table are for unshielded cables. When shielded cables are used divide the values listed in the table by 2. Note that the values are for the total wiring length – if you connect more than one motor in parallel you must add the lengths of the individual motor cables.

Total wiring lenght

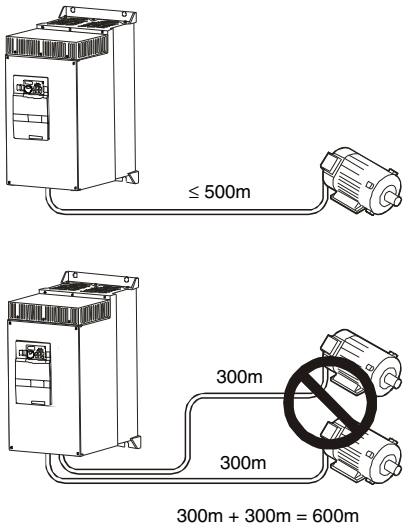

Note that the motor windings in three-phase AC motors are subject to far more stress when operated via frequency inverters than with mains operation. The motor must have been approved by the manufacturer for operation on a frequency inverter.

In the PWM type inverter, a surge voltage attributable to wiring constants is generated at the motor terminals. Especially for a 400V class motor, the surge voltage may deteriorate the insulation. When the 400V class motor is driven by the inverter, consider the following measures:

- Use a "400V class inverter-driven insulation-enhanced motor" and set frequency in *Pr. 72 PWM frequency selection* according to wiring length.

	≤ 50m	50m–100m	≥ 100m
Carrier frequency	≤ 14.5kHz	≤ 9kHz	≤ 4kHz

- Limiting the voltage rise speed of the frequency inverter output voltage (dU/dT):
  If the motor requires a rise speed of 500V/µs or less you must install a filter in the output of the inverter. Please contact your Mitsubishi dealer for more details.

CAUTION

- Especially for long-distance wiring, the inverter may be affected by a charging current caused by the stray capacitances of the wiring, leading to a malfunction of the overcurrent protective function or fast response current limit function or a malfunction or fault of the equipment connected on the inverter output side. If fast response current limit function malfunctions, disable this function. (For *Pr. 156 Stall prevention operation selection*, refer to the Instruction Manual.)
- For details of *Pr. 72 PWM frequency selection*, refer to the Instruction Manual.

3.3.3 Cable size of the control circuit power supply (terminal R1/L11, S1/L21)

- Terminal screw size: M4
- Cable size: 0.75mm² to 2mm²
- Tightening torque: 1.5Nm

3.4 Control circuit specification

3.4.1 Standard control circuit terminal layout

Terminal screw size: M3.5
Tightening torque: 1.2Nm

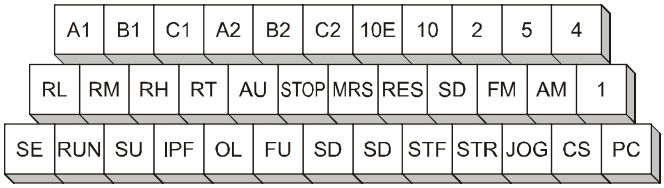

3.4.2 Wiring instruction

- Terminals PC, 5, and SE are all common terminals (0V) for I/O signals and are isolated from each other. Avoid connecting the terminal PC and 5 and the terminal SE and 5 (ground). Terminal PC is a common terminal for the contact input terminals (STF, STR, STOP, RH, RM, RL, JOG, RT, MRS, RES, AU, CS).
- Use shielded or twisted cables for connection to the control circuit terminals and run them away from the main and power circuits (including the 230V relay sequence circuit).
- Use two or more parallel micro-signal contacts or twin contacts to prevent a contact faults when using contact inputs since the control circuit input signals are micro-currents.

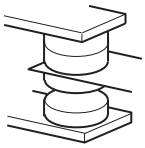

Micro signal contacts

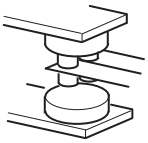

Twin contacts

- Do not apply a voltage to the contact input terminals (e.g. STF) of the control circuit.
- Always apply a voltage to the alarm output terminals (A, B, C) via a relay coil, lamp, etc.
- It is recommended to use the cables of 0.3mm² to 0.75mm² gauge for connection to the control circuit terminals.
  If the cable gauge used is 1.25mm² or more, the front cover may be lifted when there are many cables running or the cables are run improperly, resulting in a fall off of the operation.
- The wiring length should be 30m maximum.
- The level of the control signals can be switched over between positive (SOURCE) and negative (SINK) logic. The input signals are set to source logic when shipped from the factory. To change the control logic, the jumper connector on the back of the control circuit terminal block must be moved to the other position.

4 PRECAUTIONS FOR USE OF THE INVERTER

The FR-A701 series is a highly reliable product, but incorrect peripheral circuit making or operation/handling method may shorten the product life or damage the product.
Before starting operation, always recheck the following items.

- Use crimping terminals with insulation sleeve to wire the power supply and motor.
- Application of power to the output terminals (U, V, W) of the inverter will damage the inverter. Never perform such wiring.
- After wiring, wire offcuts must not be left in the inverter. Wire offcuts can cause an alarm, failure or malfunction. Always keep the inverter clean. When drilling mounting holes in a control box etc., take care not to allow chips and other foreign matter to enter the inverter.
- Use cables of the size to make a voltage drop 2% maximum.
  If the wiring distance is long between the inverter and motor, a main circuit cable voltage drop will cause the motor torque to decrease especially at the output of a low frequency.
  Refer to *page 6* for the recommended cable size.
- The overall wiring length should be 500m maximum.
  Especially for long distance wiring, the fast-response current limit function may be reduced or the equipment connected to the inverter output side may malfunction or become faulty under the influence of a charging current due to the stray capacity of the wiring. Therefore, note the overall wiring length. (Refer to *page 7*)
- Electromagnetic Compatibility
  Operation of the frequency inverter can cause electromagnetic interference in the input and output that can be propagated by cable (via the power input lines), by wireless radiation to nearby equipment (e.g. AM radios) or via data and signal lines. Install an optional filter if present to reduce air propagated interference on the input side of the inverter. Use AC or DC reactors to reduce line propagated noise (harmonics). Use shielded motor power lines to reduce output noise.
- Do not install a power factor correction capacitor, varistor or arrester on the inverter output side. This will cause the inverter to trip or the capacitor, varistor, or arrester to be damaged. If any of the above devices is installed, immediately remove it.
- Before starting wiring or other work after the inverter is operated, wait for at least 10 minutes after the power supply has been switched off, and check that there are no residual voltage using a tester or the like. The capacitor is charged with high voltage for some time after power off and it is dangerous.
- A short circuit or earth fault on the inverter output side may damage the inverter modules.
  – Fully check the insulation resistance of the circuit prior to inverter operation since repeated short circuits caused by peripheral circuit inadequacy or an earth fault caused by wiring inadequacy or reduced motor insulation resistance may damage the inverter modules.
  – Fully check the to-earth insulation and inter-phase insulation of the inverter output side before power-on.
  Especially for an old motor or use in hostile atmosphere, securely check the motor insulation resistance etc.
- Do not use the inverter input side magnetic contactor to start/stop the inverter.
  Always use the start signal (ON/OFF of STF and STR signals) to start/stop the inverter.
- Do not apply a voltage higher than the permissible voltage to the inverter I/O signal circuits. Application of a voltage higher than the permissible voltage to the inverter I/O signal circuits or opposite polarity may damage the I/O devices. Especially check the wiring to prevent the speed setting potentiometer from being connected incorrectly to short terminals 10E- or 10-5.
- Provide electrical and mechanical interlocks for MC1 and MC2 which are used for bypass operation.
  When the wiring is incorrect or if there is a bypass circuit as shown below, the inverter will be damaged by leakage current from the power supply due to arcs generated at the time of switch-over or chattering caused by a sequence error.

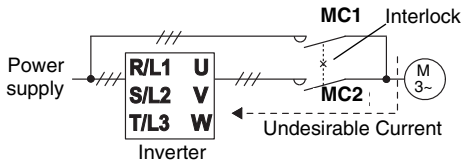

- If the machine must not be restarted when power is restored after a power failure, provide a magnetic contactor in the inverter's input side and also make up a sequence which will not switch on the start signal.
  If the start signal (start switch) remains on after a power failure, the inverter will automatically restart as soon as the power is restored.

- Instructions for overload operation
  When performing operation of frequent start/stop of the inverter, increase/decrease in the temperature of the transistor element of the inverter may repeat due to a continuous flow of large current, shortening the life from thermal fatigue. Since thermal fatigue is related to the amount of current, the life can be increased by reducing bound current, starting current, etc. Decreasing current may increase the life. However, decreasing current will result in insufficient torque and the inverter may not start. Therefore, increase the inverter capacity to have enough allowance for current.
- Make sure that the specifications and rating match the system requirements.
- A motor with encoder is necessary for vector control. In addition, connect the encoder directly to the backlash-free motor shaft. (An encoder is not necessary for real sensorless vector control.)
- When the motor speed is unstable, due to change in the frequency setting signal caused by electromagnetic noises from the inverter, take the following measures when applying the motor speed by the analog signal.
  – Do not run the signal cables and power cables (inverter I/O cables) in parallel with each other and do not bundle them.
  – Run signal cables as far away as possible from power cables (inverter I/O cables).
  – Use shield cables as signal cables.
  – Install a ferrite core on the signal cable (Example: ZCAT3035-1330 TDK).

5 FAILSAFE OF THE SYSTEM WHICH USES THE INVERTER

When a fault occurs, the inverter trips to output a fault signal. However, a fault output signal may not be output at an inverter fault occurrence when the detection circuit or output circuit fails, etc. Although Mitsubishi assures best quality products, provide an interlock which uses inverter status output signals to prevent accidents such as damage to machine when the inverter fails for some reason and at the same time consider the system configuration where failsafe from outside the inverter, without using the inverter, is enabled even if the inverter fails.

Interlock method which uses the inverter status output signals
By combining the inverter status output signals to provide an interlock as shown below, an inverter alarm can be detected.

Interlock Method	Check Method	Used Signals	Refer to Page
Inverter protective function operation	Operation check of an alarm contact Circuit error detection by negative logic	Fault output signal (ALM signal)	Refer to chapter "Parameter" of the Instruction Manual
Inverter runnning status	Operation ready signal check	Operation ready signal (RY signal)	
	Logic check of the start signal and running signal	Start signal (STF signal, STR signal) Running signal (RUN signal)	
	Logic check of the start signal and output current	Start signal (STF signal, STR signal) Output current detection signal (Y12 signal)	

Backup method outside the inverter
Even if the interlock is provided by the inverter status signal, enough failsafe is not ensured depending on the failure status of the inverter itself. For example, even if the interlock is provided using the inverter fault output signal, start signal and RUN signal output, there is a case where a fault output signal is not output and RUN signal is kept output even if an inverter fault occurs.

Provide a speed detector to detect the motor speed and current detector to detect the motor current and consider the backup system such as checking up as below according to the level of importance of the system. Check the motor running and motor current while the start signal is input to the inverter by comparing the start signal to the inverter and detected speed of the speed detector or detected current of the current detector. Note that the motor current runs as the motor is running for the period until the motor stops since the inverter starts decelerating even if the start signal turns off. For the logic check, configure a sequence considering the inverter deceleration time. In addition, it is recommended to check the three-phase current when using the current detector.

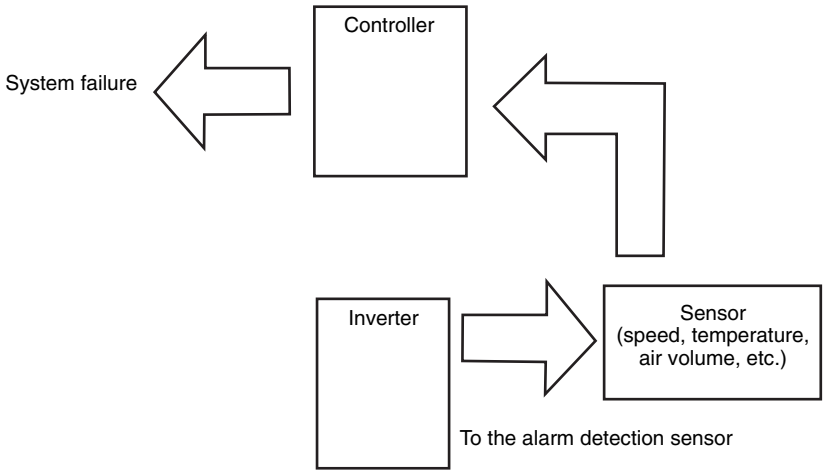

Check if there is no gap between the actual speed and commanded speed by comparing the inverter speed command and detected speed of the speed detector.

6 PARAMETER

For simple variable-speed operation of the inverter, the initial setting of the parameters may be used as they are. Set the necessary parameters to meet the load and operational specifications. Parameter setting, change and check can be made from the operation panel. For details of parameters, refer to the instruction manual.

In the initial setting, all parameters are displayed. Set *Pr. 160 Extended function display selection* as required.

Parameter	Name	Initial Value	Setting Range	Remarks
160	User group read selection	0	9999	Only the simple mode parameters can be displayed.
			0	Simple mode and extended mode parameters can be displayed.
			1	Only parameters registered in the user group can be displayed.

Remarks

- The parameters marked ◎ are the simple mode parameters.
- The parameters marked with [ ] in the table allow its setting to be changed during operation even if "0" (initial value) is set in *Pr. 77 Parameter write selection*.

Parameter	Name	Setting Range	Initial Value
◎ 0	Torque boost	0 to 30%	3/2% *1
◎ 1	Maximum frequency	0 to 120Hz	120Hz
◎ 2	Minimum frequency	0 to 120Hz	0Hz
◎ 3	Base frequency	0 to 400Hz	60Hz
◎ 4	Multi-speed setting (high speed)	0 to 400Hz	60Hz
◎ 5	Multi-speed setting (middle speed)	0 to 400Hz	30Hz
◎ 6	Multi-speed setting (low speed)	0 to 400Hz	10Hz
◎ 7	Acceleration time	0 to 3600/360s	5s/15s *1
◎ 8	Deceleration time	0 to 3600/360s	5s/15s *1
◎ 9	Electronic thermal O/L relay	0 to 500A	Rated inverter output current
10	DC injection brake operation frequency	0 to 120Hz, 9999	3Hz
11	DC injection brake operation time	0 to 10s, 8888	0.5s
12	DC injection brake operation voltage	0 to 30%	4/2% *1
13	Starting frequency	0 to 60Hz	0.5Hz
14	Load pattern selection	0 to 5	0
15	Jog frequency	0 to 400Hz	5Hz
16	Jog acceleration/ deceleration time	0 to 3600/360s	0.5s
17	MRS input selection	0, 2, 4	0
18	High speed maximum frequency	120 to 400Hz	120Hz
19	Base frequency voltage	0 to 1000V, 8888, 9999	9999
20	Acceleration/ deceleration reference frequency	1 to 400Hz	60Hz

Parameter	Name	Setting Range	Initial Value
21	Acceleration/ deceleration time increments	0, 1	0
22	Stall prevention operation level (torque limit level)	0 to 400%	150%
23	Stall prevention operation level compensation factor at double speed	0 to 200%, 9999	9999
24–27	Multi-speed setting 4 speed to 7 speed	0 to 400Hz, 9999	9999
28	Multi-speed input compensation selection	0, 1	0
29	Acceleration/ deceleration pattern selection	0 to 5	0
31	Frequency jump 1A	0 to 400Hz, 9999	9999
32	Frequency jump 1B		
33	Frequency jump 2A		
34	Frequency jump 2B		
35	Frequency jump 3A		
36	Frequency jump 3B		
37	Speed display	0, 1 to 9998	0
41	Up-to-frequency sensitivity	0 to 100%	10%
42	Output frequency detection	0 to 400Hz	6Hz
43	Output frequency detection for reverse rotation	0 to 400Hz, 9999	9999
44	Second acceleration/ deceleration time	0 to 3600/360s	5s
45	Second deceleration time	0 to 3600/360s, 9999	9999
46	Second torque boost	0 to 30%, 9999	9999
47	Second V/F (base frequency)	0 to 400Hz, 9999	9999
48	Second stall prevention operation current	0 to 220%	150%
49	Second stall prevention operation frequency	0 to 400Hz, 9999	0Hz

Parameter	Name	Setting Range	Initial Value
50	Second output frequency detection	0 to 400Hz	30Hz
51	Second electronic thermal O/L relay	0 to 500A, 9999	9999
52	DU/PU main display data selection	0, 5 to 8, 10 to 14, 17 to 20, 22 to 25, 32 to 35, 50 to 57, 100	0
54	FM terminal function selection	1 to 3, 5 to 8, 10 to 14, 17, 18, 21, 24, 32 to 34, 50, 52, 53	1
55	Frequency monitoring reference	0 to 400Hz	60Hz
56	Current monitoring reference	0 to 500A	Rated inverter output current
57	Restart coasting time	0, 0.1 to 5s, 9999	9999
58	Restart cushion time	0 to 60s	1s
59	Remote function selection	0, 1, 2, 3	0
60	Energy saving control selection	0, 4	0
61	Reference current	0 to 500A, 9999	9999
62	Reference value at acceleration	0 to 220%, 9999	9999
63	Reference value at deceleration	0 to 220%, 9999	9999
64	Starting frequency for elevator mode	0 to 10Hz, 9999	9999
65	Retry selection	0 to 5	0
66	Stall prevention operation reduction starting frequency	0 to 400Hz	60Hz
67	Number of retries at fault occurrence	0, 1 to 10, 101 to 110	0
68	Retry waiting time	0 to 10s	1s
69	Retry count display erase	0	0
71	Applied motor	0 to 8, 13 to 18, 30, 33, 34, 40, 43, 44, 50, 53, 54	0
72	PWM frequency selection	0 to 15	2
73	Analog input selection	0 to 7, 10 to 17	1
74	Input filter time constant	0 to 8	1
75	Reset selection/ disconnected PU detection/PU stop selection	0 to 3, 14 to 17	14
76	Alarm code output selection	0, 1, 2	0
77	Parameter write selection	0, 1, 2	0
78	Reverse rotation prevention selection	0, 1, 2	0
◎ 79	Operation mode selection	0, 1, 2, 3, 4, 6, 7	0
80	Motor capacity	0.4 to 55kW, 9999	9999
81	Number of motor poles	2, 4, 6, 8, 10, 12, 14, 16, 18, 20, 9999	9999
82	Motor excitation current	0 to 500A, 9999	9999

Parameter	Name		Setting Range	Initial Value
83	Rated motor voltage		0 to 1000V	400V
84	Rated motor frequency		10 to 120Hz	60Hz
89	Speed control gain (magnetic flux vector)		0 to 200%, 9999	9999
90	Motor constant (R1)		0 to 50Ω, 9999	9999
91	Motor constant (R2)			9999
92	Motor constant (L1)		0 to 50Ω, (0 to 1000mH), 9999	9999
93	Motor constant (L2)			9999
94	Motor constant (X)		0 to 500Ω, (0 to 100%), 9999	9999
95	Online auto tuning selection		0 to 2	0
96	Auto tuning setting/ status		0, 1, 101	0
100	Adjustable 5 points V/F	V/F1 (first frequency)	0 to 400Hz, 9999	9999
101		V/F1 (first frequency voltage)	0 to 1000V	0V
102		V/F2 (second frequency)	0 to 400Hz, 9999	9999
103		V/F2 (second frequency voltage)	0 to 1000V	0V
104		V/F3 (third frequency)	0 to 400Hz, 9999	9999
105		V/F3 (third frequency voltage)	0 to 1000V	0V
106		V/F4 (fourth frequency)	0 to 400Hz, 9999	9999
107		V/F4 (fourth frequency voltage)	0 to 1000V	0V
108		V/F5 (fifth frequency)	0 to 400Hz, 9999	9999
109		V/F5 (fifth frequency voltage)	0 to 1000V	0V
110	Third functions	Third acceleration/ deceleration time	0 to 3600/360s, 9999	9999
111		Third deceleration time		9999
112		Third torque boost	0 to 30%, 9999	9999
113		Third V/F (base frequency)	0 to 400Hz, 9999	9999
114		Third stall prevention operation current	0 to 220%	150%
115		Third stall prevention operation frequency	0 to 400Hz	0
116		Third output frequency detection	0 to 400Hz	60Hz
117	PU communication station number		0 to 31	0
118	PU communication speed		48, 96, 192, 384	192

Parameter	Name		Setting Range	Initial Value
119	PU communication stop bit length		0, 1, 10, 11	1
120	PU communication parity check		0, 1, 2	2
121	Number of PU communication retries		0 to 10, 9999	1
122	PU communication check time interval		0, 0.1 to 999.8s, 9999	9999
123	PU communication waiting time setting		0 to 150ms, 9999	9999
124	PU communication CR/LF selection		0, 1, 2	1
◎ 125	Terminal 2 frequency setting gain frequency		0 to 400Hz	60Hz
◎ 126	Terminal 4 frequency setting gain frequency		0 to 400Hz	60Hz
127	PID operation	PID control automatic switchover frequency	0 to 400Hz, 9999	9999
128	PID operation	PID action selection	10, 11, 20, 21, 50, 51, 60, 61	10
129	PID operation	PID proportional band	0.1 to 1000%, 9999	100%
130	PID operation	PID integral time	0.1 to 3600s, 9999	1s
131	PID operation	PID upper limit	0 to 100%, 9999	9999
132	PID operation	PID lower limit	0 to 100%, 9999	9999
133	PID operation	PID action set point	0 to 100%, 9999	9999
134	PID operation	PID differential time	0.01 to 10.00s, 9999	9999
135	Bypass	Electronic bypass sequence selection	0, 1	0
136	Bypass	MC switchover interlock time	0 to 100s	1s
137	Bypass	Start waiting time	0 to 100s	0.5s
138	Bypass	Bypass selection at a fault	0, 1	0
139	Bypass	Automatic switchover frequency from inverter to bypass operation	0 to 60Hz, 9999	9999
140	Backlash measures	Backlash acceleration stopping frequency	0 to 400Hz	1Hz
141	Backlash measures	Backlash acceleration stopping time	0 to 360s	0.5s
142	Backlash measures	Backlash deceleration stopping frequency	0 to 400Hz	1Hz
143	Backlash measures	Backlash deceleration stopping time	0 to 360s	0.5s
144	Speed setting switchover		0, 2, 4, 6, 8, 10, 102, 104, 106, 108, 110	4
145	PU	PU display language selection	0 to 7	1

Parameter	Name		Setting Range	Initial Value
148	Current detection	Stall prevention level at 0V input	0 to 220%	150%
149	Current detection	Stall prevention level at 10V input	0 to 220%	200%
150	Current detection	Output current detection level	0 to 220%	150%
151	Current detection	Output current detection signal delay time	0 to 10s	0s
152	Current detection	Zero current detection level	0 to 220%	5%
153	Current detection	Zero current detection time	0 to 1s	0.5s
154	Voltage reduction selection during stall prevention operation		0, 1	1
155	RT signal function validity condition selection		0, 10	0
156	Stall prevention operation selection		0 to 31, 100, 101	0
157	OL signal output timer		0 to 25s, 9999	0s
158	AM terminal function selection		1 to 3, 5 to 8, 10 to 14, 17, 18, 21, 24, 32 to 34, 50, 52, 53	1
159	Automatic switchover frequency range from bypass to inverter operation		0 to 10Hz, 9999	9999
◎ 160	User group read selection		0, 1, 9999	0
161	Frequency setting/key lock operation selection		0, 1, 10, 11	0
162	Automatic restart functions	Automatic restart after instantaneous power failure selection	0, 1, 2, 10, 11, 12	0
163	Automatic restart functions	First cushion time for restart	0 to 20s	0s
164	Automatic restart functions	First cushion voltage for restart	0 to 100%	0%
165	Automatic restart functions	Stall prevention operation level for restart	0 to 220%	150%
166	Output current detection signal retention time		0 to 10s, 9999	0.1s
167	Output current detection operation selection		0, 1	0
168	Parameter for manufacturer setting. Do not set.			
169				
170	Watt-hour meter clear		0, 10, 9999	9999
171	Operation hour meter clear		0, 9999	9999
172	User group registered display/batch clear		9999, (0 to 16)	0
173	User group registration		0 to 999, 9999	9999

Parameter	Name	Setting Range	Initial Value
174	User group clear	0 to 999, 9999	9999
178	STF terminal function selection	0 to 9, 12 to 20, 22 to 28, 42 to 44, 60, 62, 64 to 69, 74, 9999	60
179	STR terminal function selection	0 to 9, 12 to 20, 22 to 28, 42 to 44, 61, 62, 64 to 69, 74, 9999	61
180	RL terminal function selection	0 to 9, 12 to 20, 22 to 28, 42 to 44, 62, 64 to 69, 74, 9999	0
181	RM terminal function selection		1
182	RH terminal function selection		2
183	RT terminal function selection		3
184	AU terminal function selection	0 to 9, 12 to 20, 22 to 28, 42 to 44, 62 to 69, 74, 9999	4
185	JOG terminal function selection	0 to 9, 12 to 20, 22 to 28, 42 to 44, 62, 64 to 69, 74, 9999	5
186	CS terminal function selection		6
187	MRS terminal function selection		24
188	STOP terminal function selection		25
189	RES terminal function selection		62
190	RUN terminal function selection	0 to 6, 8, 10 to 20, 25 to 28, 30 to 36, 39, 41 to 47, 64, 70, 84, 90 to 99, 100 to 106, 108, 110 to 116, 120, 125 to 128, 130 to 136, 139, 141 to 147, 164, 170, 184, 190 to 199, 9999	0
191	SU terminal function selection		1
192	IPF terminal function selection		2
193	OL terminal function selection		3
194	FU terminal function selection		4
195	ABC1 terminal function selection	0 to 6, 8, 10 to 20, 25 to 28, 30 to 36, 39, 41 to 47, 64, 70, 84, 90, 91, 94 to 99, 100 to 106, 108, 110 to 116, 120, 125 to 128, 130 to 136, 139, 141 to 147, 164, 170, 184, 190, 191, 194 to 199, 9999	99
196	ABC2 terminal function selection		9999
232–239	Multi-speed setting (8 speed to 15 speed)	0 to 400Hz, 9999	9999
240	Soft-PWM operation selection	0, 1	1
241	Analog input display unit switchover	0, 1	0
242	Terminal 1 added compensation amount (terminal 2)	0 to 100%	100%
243	Terminal 1 added compensation amount (terminal 4)		75%
244	Cooling fan operation selection	0, 1	1

Parameter	Name		Setting Range	Initial Value
245	Slip compensation	Rated slip	0 to 50%, 9999	9999
246		Slip compensation time constant	0.01 to 10s	0,5s
247		Constant-power range slip compensation selection	0, 9999	9999
250	Stop selection		0 to 100s, 1000 to 1100s, 8888, 9999	9999
251	Output phase loss protection selection		0, 1	1
252	Frequency compensation function	Override bias	0 to 200%	50%
253		Override gain	0 to 200%	150%
255	Life alarm status display		(0 to 15)	0
256	Inrush current limit circuit life display		(0 to 100%)	100%
257	Control circuit capacitor life display		(0 to 100%)	100%
258	Main circuit capacitor life display		(0 to 100%)	100%
259	Main circuit capacitor life measuring		0, 1 (2, 3, 8, 9)	0
261	Power failure stop selection		0, 1, 2, 11, 12	0
262	Subtracted frequency at deceleration start		0 to 20Hz	3Hz
263	Subtraction starting frequency		0 to 120Hz, 9999	60Hz
264	Power-failure deceleration time 1		0 to 3600/360s	5s
265	Power-failure deceleration time 2		0 to 3600/360s, 9999	9999
266	Power failure deceleration time switchover frequency		0 to 400Hz	60Hz
267	Terminal 4 input selection		0, 1, 2	0
268	Monitor decimal digits selection		0, 1, 9999	9999
269	Parameter for manufacturer setting. Do not set.			
270	Stop-on contact/load torque high-speed frequency control selection		0, 1, 2, 3	0
271	Load torque high speed frequency control	High-speed setting maximum current	0 to 220%	50%
272		Middle-speed setting minimum current		100%
273		Current averaging range	0 to 400Hz, 9999	9999
274		Current averaging filter time constant	1 to 4000	16
275	Stop-on contact excitation current low-speed multiplying factor		0 to 1000%, 9999	9999
276	PWM carrier frequency at stop-on contact		0 to 9, 9999	9999

Parameter	Name		Setting Range	Initial Value
278	Brake sequence function	Brake opening frequency	0 to 30Hz	3Hz
279		Brake opening current	0 to 220%	130%
280		Brake opening current detection time	0 to 2s	0.3s
281		Brake operation time at start	0 to 5s	0.3s
282		Brake operation frequency	0 to 30Hz	6Hz
283		Brake operation time at stop	0 to 5s	0.3s
284		Deceleration detection function selection	0, 1	0
285		Overspeed detection frequency (Speed deviation excess detection frequency)	0 to 30Hz, 9999	9999
286	Droop gain		0 to 100%	0%
287	Droop filter time constant		0 to 1s	0.3s
288	Droop function activation selection		0, 1, 2, 10, 11	0
291	Pulse train I/O selection		0, 1, 2, 10, 11, 20, 21, 100	0
292	Automatic acceleration/ deceleration		0, 3, 5 to 8, 11	0
293	Acceleration/ deceleration separate selection		0 to 2	0
294	UV avoidance voltage gain		0 to 200%	100%
299	Rotation direction detection selection at restarting		0, 1, 9999	0
331	RS-485 communication	RS-485 communication station number	0 to 31 (0 to 247)	0
332		RS-485 communication speed	3, 6, 12, 24, 48, 96, 192, 384	96
333		RS-485 communication stop bit length	0, 1, 10, 11	1
334		RS-485 communication parity check selection	0, 1, 2	2
335		RS-485 communication retry count	0 to 10, 9999	1
336		RS-485 communication check time interval	0 to 999.8s, 9999	0s
337		RS-485 communication waiting time setting	0 to 150ms, 9999	9999
338		Communication operation command source	0, 1	0
339		Communication speed command source	0, 1, 2	0
340		Communication startup mode selection	0, 1, 2, 10, 12	0

Parameter	Name		Setting Range	Initial Value
341	RS-485 communication	RS-485 communication CR/LF selection	0, 1, 2	1
342		Communication EEPROM write selection	0, 1	0
343		Communication error count	—	0
350 *2	Orientation control	Stop position command selection	0, 1, 9999	9999
351 *2		Orientation speed	0 to 30Hz	2Hz
352 *2		Creep speed	0 to 10Hz	0.5Hz
353 *2		Creep switchover position	0 to 16383	511
354 *2		Position loop switchover position	0 to 8191	96
355 *2		DC injection brake start position	0 to 255	5
356 *2		Internal stop position command	0 to 16383	0
357 *2		Orientation in-position zone	0 to 255	5
358 *2		Servo torque selection	0 to 13	1
359 *2		Encoder rotation direction	0, 1	1
360 *2		16 bit data selection	0 to 127	0
361 *2		Position shift	0 to 16383	0
362 *2		Orientation position loop gain	0.1 to 100	1
363*2		Completion signal output delay time	0 to 5s	0.5s
364 *2		Encoder stop check time	0 to 5s	0.5s
365 *2		Orientation limit	0 to 60s, 9999	9999
366 *2		Recheck time	0 to 5s, 9999	9999
367 *2	Encoder feedback	Speed feedback range	0 to 400Hz, 9999	9999
368 *2		Feedback gain	0 to 100	1
369 *2		Number of encoder pulses	0 to 4096	1024
374		Overspeed detection level	0 to 400Hz	140Hz
376 *2		Encoder signal loss detection enable/disable selection	0, 1	0

Parameter	Name		Setting Range	Initial Value
380	S-pattern acceleration/deceleration C	Acceleration S-pattern 1	0 to 50%	0
381		Deceleration S-pattern 1	0 to 50%	0
382		Acceleration S-pattern 2	0 to 50%	0
383		Deceleration S-pattern 2	0 to 50%	0
384	Pulse train input	Input pulse division scaling factor	0 to 250	0
385		Frequency for zero input pulse	0 to 400Hz	0
386		Frequency for maximum input pulse	0 to 400Hz	60Hz
393 *2	Orientation control	Orientation selection	0, 1, 2	0
396 *2		Orientation speed gain (P term)	0 to 1000	60
397 *2		Orientation speed integral time	0 to 20s	0.333s
398 *2		Orientation speed gain (D term)	0 to 100	1
399 *2		Orientation deceleration ratio	0 to 1000	20
419 *2	Position control	Position command source selection	0, 2	0
420 *2		Command pulse scaling factor numerator	0 to 32767	1
421 *2		Command pulse scaling factor denominator	0 to 32767	1
422 *2		Position loop gain	0 to 150s^{-1}	25s^{-1}
423 *2		Position feed forward gain	0 to 100%	0
424 *2		Position command acceleration/deceleration time constant	0 to 50s	0 s
425 *2		Position feed forward command filter	0 to 5s	0 s
426 *2		In-position width	0 to 32767 pulse	100
427 *2		Excessive level error	0 to 400k	40k
428 *2		Command pulse selection	0 to 5	0
429 *2		Clear signal selection	0, 1	0
430 *2		Pulse monitor selection	0 to 5, 9999	9999

Parameter	Name		Setting Range	Initial Value
450	Second motor constants	Second applied motor	0 to 8, 13 to 18, 30, 33, 34, 40, 43, 44, 50, 53, 54, 9999	9999
451		Second motor control method selection	10, 11, 12, 20, 9999	9999
453		Second motor capacity	0,4 to 55kW, 9999	9999
454		Number of second motor poles	2, 4, 6, 8, 10, 9999	9999
455		Second motor excitation current	0 to 500A, 9999	9999
456		Rated second motor voltage	0 to 1000V	400V
457		Rated second motor frequency	10 to 120Hz	60Hz
458		Second motor constant (R1)	0 to 50Ω, 9999	9999
459		Second motor constant (R2)		9999
460		Second motor constant (L1)	0 to 50Ω, (0 to 1000mH), 9999	9999
461		Second motor constant (L2)		9999
462		Second motor constant (X)	0 to 500Ω, (0 to 100%), 9999	9999
463		Second motor auto tuning setting/status	0, 1, 101	0
464 *2	Digital position control sudden stop deceleration time		0 to 360,0s	0
465 *2	1. Position feed amount	Lower 4 digits	0 to 9999	0
466 *2		Upper 4 digits	0 to 9999	0
467 *2	2. Position feed amount	Lower 4 digits	0 to 9999	0
468 *2		Upper 4 digits	0 to 9999	0
469 *2	3. Position feed amount	Lower 4 digits	0 to 9999	0
470 *2		Upper 4 digits	0 to 9999	0
471 *2	4. Position feed amount	Lower 4 digits	0 to 9999	0
472 *2		Upper 4 digits	0 to 9999	0
473 *2	5. Position feed amount	Lower 4 digits	0 to 9999	0
474 *2		Upper 4 digits	0 to 9999	0
475 *2	6. Position feed amount	Lower 4 digits	0 to 9999	0
476 *2		Upper 4 digits	0 to 9999	0
477 *2	7. Position feed amount	Lower 4 digits	0 to 9999	0
478 *2		Upper 4 digits	0 to 9999	0

Parameter	Name		Setting Range	Initial Value
479 *2	8. Position feed amount	Lower 4 digits	0 to 9999	0
480 *2		Upper 4 digits	0 to 9999	0
481 *2	9. Position feed amount	Lower 4 digits	0 to 9999	0
482 *2		Upper 4 digits	0 to 9999	0
483 *2	10. Position feed amount	Lower 4 digits	0 to 9999	0
484 *2		Upper 4 digits	0 to 9999	0
485 *2	11. Position feed amount	Lower 4 digits	0 to 9999	0
486 *2		Upper 4 digits	0 to 9999	0
487 *2	12. Position feed amount	Lower 4 digits	0 to 9999	0
488 *2		Upper 4 digits	0 to 9999	0
489 *2	13. Position feed amount	Lower 4 digits	0 to 9999	0
490 *2		Upper 4 digits	0 to 9999	0
491 *2	14. Position feed amount	Lower 4 digits	0 to 9999	0
492 *2		Upper 4 digits	0 to 9999	0
493 *2	15. Position feed amount	Lower 4 digits	0 to 9999	0
494 *2		Upper 4 digits	0 to 9999	0
495	Remote output selection		0, 1, 10, 11	0
496	Remote output data 1		0 to 4095	0
497	Remote output data 2		0 to 4095	0
503	Maintenance timer		0 (1 to 9998)	0
504	Maintenance timer alarm output set time		0 to 9998, 9999	9999
505	Speed setting reference		1 to 120Hz	60Hz
516	S-pattern acceleration/ deceleration D	S-pattern time at a start of acceleration	0.1 to 2.5s	0.1s
517		S-pattern time at a completion of acceleration		
518		S-pattern time at a start of deceleration		
519		S-pattern time at a completion of deceleration		
539	Modbus-RTU communication check time interval		0 to 999.8s, 9999	9999
547	Parameter for manufacturer setting. Do not set.			
548				

Parameter	Name		Setting Range	Initial Value
549	Communication	Protocol selection	0, 1	0
550		NET mode operation command source selection	0, 1, 9999	9999
551		PU mode operation command source selection	1, 2	2
555	Current average value monitor	Current average time	0.1 to 1.0s	1s
556		Data output mask time	0.0 to 20s	0s
557		Current average value monitor signal output reference current	0 to 500A	Rated inverter output current
563	Energization time carrying-over times		(0 to 65535)	0
564	Operating time carrying-over times		(0 to 65535)	0
569	Second motor speed control gain		0 to 200%, 9999	9999
571	Holding time at a start		0.0 to 10.0s, 9999	9999
574	Second motor online auto tuning		0, 1	0
575	PID control	Output interruption detection time	0 to 3600s, 9999	1s
576		Output interruption detection level	0 to 400Hz	0Hz
577		Output interruption cancel level	900 to 1100%	1000%
611	Acceleration time at a restart		0 to 3600s, 9999	5s
665	Regeneration avoidance frequency gain		0 to 200%	100
684	Tuning data unit switchover		0, 1	0
800	Control method selection		0 to 5, 9 to 12, 20	20
802 *2	Pre-excitation selection		0, 1,	0
803	Torque command	Constant power range torque characteristic selection	0, 1	0
804		Torque command source selection	0, 1, 3 to 6	0
805		Torque command value (RAM)	600 to 1400%	1000%
806		Torque command value (RAM, EEPROM)		
807	Speed limit selection		0, 1, 2	0
808	Forward rotation speed limit		0 to 120Hz	60Hz
809	Reverse rotation speed limit		0 to 120Hz, 999	9999

Parameter	Name		Setting Range	Initial Value
810	Torque limit	Torque limit input method selection	0, 1	0
811		Set resolution switchover	0, 1, 10, 11	0
812		Torque limit level (regeneration)	0 to 400%, 9999	9999
813		Torque limit level (3rd quadrant)	0 to 400%, 9999	9999
814		Torque limit level (4th quadrant)	0 to 400%, 9999	9999
815		Torque limit level 2	0 to 400%, 9999	9999
816		Torque limit level during acceleration	0 to 400%, 9999	9999
817		Torque limit level during deceleration	0 to 400%, 9999	9999
818	Easy gain tuning response level setting		1 to 15	2
819	Easy gain tuning selection		0 to 2	0
820	Speed control P gain 1		0 to 1000%	60%
821	Speed control integral time 1		0 to 20s	0.333s
822	Speed setting filter 1		0 to 5s, 9999	9999
823 *2	Speed detection filter 1		0 to 0.1s	0.001
824	Torque control P gain 1		0 to 200%	100%
825	Torque control integral time 1		0 to 500ms	5ms
826	Torque setting filter 1		0 to 5s, 9999	9999
827	Torque detection filter 1		0 to 0.1s	0s
828	Model speed control gain		0 to 1000%	60%
830	Speed control P gain 2		0 to 1000%, 9999	9999
831	Speed control integral time 2		0 to 20s, 9999	9999
832	Speed setting filter 2		0 to 5s, 9999	9999
833 *2	Speed detection filter 2		0 to 0.1s, 9999	9999
834	Torque control P gain 2		0 to 200%, 9999	9999
835	Torque control integral time 2		0 to 500ms, 9999	9999
836	Torque setting filter 2		0 to 5s, 9999	9999
837	Torque detection filter 2		0 to 0,1s, 9999	9999

Parameter	Name		Setting Range	Initial Value
840 *2	Torque bias	Torque bias selection	0 to 3, 9999	9999
841 *2		Torque bias 1	600 to 1400%, 9999	9999
842 *2		Torque bias 2		
843 *2		Torque bias 3		
844 *2		Torque bias filter	0 to 5s, 9999	9999
845 *2		Torque bias operation time	0 to 5s, 9999	9999
846 *2		Torque bias balance compensation	0 to 10V, 9999	9999
847 *2		Fall-time torque bias terminal 1 bias	0 to 400%, 9999	9999
848 *2		Fall-time torque bias terminal 1 gain	0 to 400%, 9999	9999
849	Additional function	Analog input offset adjustment	0 to 200%	100%
850		Brake operation selection	0, 1	0
853		Speed deviation time	0 to 100s	1s
854		Excitation ratio	0 to 100%	100%
858		Terminal 4 function assignment	0, 1, 4, 9999	0
859		Torque current	0 to 500A, 9999	9999
860		Second motor torque current		9999
862		Notch filter time constant	0 to 60	0
863		Notch filter depth	0, 1, 2, 3	0
864		Torque detection	0 to 400%	150%
865		Low speed detection	0 to 400Hz	1.5Hz
866	Torque monitoring reference		0 to 400%	150%
867	AM output filter		0 to 5s	0.01s
868	Terminal 1 function assignment		0 to 6, 9999	0
872	Protective Functions	Input phase failure protection selection	0, 1	1
873 *2		Speed limit	0 to 120Hz	20Hz
874		OLT level setting	0 to 200%	150%
875		Fault definition	0, 1	0

Parameter	Name		Setting Range	Initial Value
877	Control method functions	Speed feed forward control/ model adaptive speed control selection	0, 1, 2	0
878	Control method functions	Speed feed forward filter	0 to 1s	0s
879	Control method functions	Speed feed forward torque limit	0 to 400%	150%
880	Control method functions	Load inertia ratio	0 to 200	7
881	Control method functions	Speed feed forward gain	0 to 1000%	0%
882	Regeneration avoidance function	Regeneration avoidance operation selection	0, 1, 2	0
883	Regeneration avoidance function	Regeneration avoidance operation level	300 to 800V	780V DC
884	Regeneration avoidance function	Regeneration avoidance at deceleration detection sensitivity	0 to 5	0
885	Regeneration avoidance function	Regeneration avoidance compensation frequency limit value	0 to 10Hz, 9999	6Hz
886	Regeneration avoidance function	Regeneration avoidance voltage gain	0 to 200%	100%
888	Free parameter 1		0 to 9999	9999
889	Free parameter 2		0 to 9999	9999
891	Energy saving monitor	Cumulative power monitor digit shifted times	0 to 4, 9999	9999
892	Energy saving monitor	Load factor	30 to 150%	100%
893	Energy saving monitor	Energy saving monitor reference (motor capacity)	0.1 to 55kW	Inverter rated capacity
894	Energy saving monitor	Control selection during commercial power-supply operation	0, 1, 2, 3	0
895	Energy saving monitor	Power saving rate reference value	0, 1, 9999	9999
896	Energy saving monitor	Power unit cost	0 to 500, 9999	9999
897	Energy saving monitor	Power saving monitor average time	0, 1 to 1000h, 9999	9999
898	Energy saving monitor	Power saving cumulative monitor clear	0, 1, 10, 9999	9999
899	Energy saving monitor	Operation time rate (estimated value)	0 to 100%, 9999	9999

Parameter	Name	Setting Range	Initial Value
C0 (900) *3	FM terminal calibration	—	—
C1 (901) *3	AM terminal calibration	—	—
C2 (902) *3	Terminal 2 frequency setting bias frequency	0 to 400Hz	0Hz
C3 (902) *3	Terminal 2 frequency setting bias	0 to 300%	0%
125 (903) *3	Terminal 2 frequency setting gain frequency	0 to 400Hz	60Hz
C4 (903) *3	Terminal 2 frequency setting gain	0 to 300%	100%
C5 (904) *3	Terminal 4 frequency setting bias frequency	0 to 400Hz	0Hz
C6 (904) *3	Terminal 4 frequency setting bias	0 to 300%	20%
126 (905) *3	Terminal 4 frequency setting gain frequency	0 to 400Hz	60Hz
C7 (905) *3	Terminal 4 frequency setting gain	0 to 300%	100%
C12 (917) *3	Terminal 1 bias frequency (speed)	0 to 400Hz	0Hz
C13 (917) *3	Terminal 1 bias (speed)	0 to 300%	0%
C14 (918) *3	Terminal 1 gain frequency (speed)	0 to 400Hz	60Hz
C15 (918) *3	Terminal 1 gain (speed)	0 to 300%	100%
C16 (919) *3	Terminal 1 bias command (torque/magnetic flux)	0 to 400%	0%
C17 (919) *3	Terminal 1 bias (torque/magnetic flux)	0 to 300%	0%
C18 (920) *3	Terminal 1 gain command (torque/magnetic flux)	0 to 400%	150%
C19 (920) *3	Terminal 1 gain (torque/magnetic flux)	0 to 300%	100%
C38 (932) *3	Terminal 4 bias command (torque/magnetic flux)	0 to 400%	0%

Parameter	Name	Setting Range	Initial Value
C39 (932) *3	Terminal 4 bias (torque/magnetic flux)	0 to 300%	20%
C40 (933) *3	Terminal 4 gain command (torque/magnetic flux)	0 to 400%	150%
C41 (933) *3	Terminal 4 gain (torque/magnetic flux)	0 to 300%	100%
989	Parameter for manufacturer setting. Do not set.		

Parameter	Name	Setting Range	Initial Value
990	PU buzzer control	0, 1	1
991	PU contrast adjustment	0 to 63	58
Pr.CL	Parameter clear	0, 1	0
ALLC	All parameter clear	0, 1	0
Er.CL	Faults history clear	0, 1	0
Pr.CH	Parameter copy	0, 1, 2, 3	0

*1 Differ according to capacities. (7.5K or less/11K or more)

*2 Setting can be made only when the FR-A7AP is mounted.

*3 The parameter number in parentheses is the one for use with the parameter unit (FR-PU04/FR-PU07).

7 TROUBLESHOOTING

When an fault occurs in the inverter, the protective function is activated bringing the inverter to an alarm stop and the PU display automatically changes to any of the following fault (alarm) indications.
If your fault does not correspond to any of the following faults or if you have any other problem, please contact your sales representative.

- Retention of fault output signal ..... When the magnetic contactor (MC) provided on the input side of the inverter is opened at the activation of the protective function, the inverter's control power will be lost and the alarm output will not be held.
- Fault or alarm display..... When a fault or alarm occurs, the operation panel display automatically switches to the fault or alarm indication.
- Resetting method ..... When a protective function of the inverter is activated, the power output of the inverter is blocked (motor is coasting). The inverter cannot start up again unless an automatic restart has been configured or the inverter is reset. Please observe carefully the warnings contained below in the configuration of an automatic restart or the execution of a reset.
- If protective functions were activated (i. e. the inverter switched off with an error message) follow the instructions for error correction provided in the manual for the inverter. Especially in the case of short circuits or earth contacts in the inverter output and mains overvoltages the cause of the fault must be determined prior to switching on again as a recurrence of such faults at short intervals can lead to premature aging of components or even the complete breakdown of the device. After the cause of the fault has been found and corrected the inverter can be reset and operations continue.

Inverter fault or alarm indications are roughly divided as below.

- Error Message
  A message regarding operational fault and setting fault by the operation panel and parameter unit (FR-PU04/FR-PU07) is displayed. The inverter does not shut off output.
- Warnings
  The inverter does not shut off output even when a warning is displayed. However, failure to take appropriate measures will lead to a major fault.
- Alarm
  The inverter does not shut off output.You can also output an alarm signal by making parameter setting.
- Fault
  When the protective function is activated, the inverter output is shut off and an fault signal is output.

7.1 Reset method of protective function

The inverter can be reset by performing any of the following operations. Note that the internal thermal integrated value of the electronic thermal relay function and the number of retries are cleared (erased) by resetting the inverter. Recover about 1 s after reset is cancelled.

Three different methods can be used to reset an inverter.

- Using the operation panel, press the STOP/RESET key to reset the inverter.
  (This may only be performed when a fault occurs.)

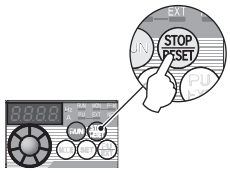

- Switch power off once, then switch it on again.

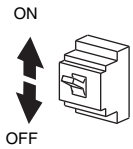

- Turn on the reset signal (RES) for more than 0.1 s. (If the RES signal is kept on, "Err." appears (flickers) to indicate that the inverter is in a reset status.)

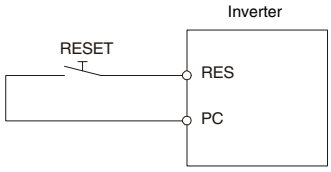

7.2 List of alarm display

	Operation Panel Indication		Meaning
Error messages	E - - -	E - - -	Faults history
	HOLd	HOLD	Operation panel lock
	Er1 to Er4	Er1 to 4	Parameter write error
	rE1 to rE4	rE1 to rE4	Copy operation error
	Err.	Err.	Inverter reset
Warnings	OL	OL	Stall Prevention (overcurrent)
	oL	oL	Stall prevention (overvoltage)
	TH	TH	Electronic thermal relay function prealarm
	PS	PS	PU Stop
	MT	MT	Maintenance signal output
	CP	CP	Parameter copy
	SL	SL	Speed limit indication (Output during speed limit)
Alarm	Fn	FN	Fan alarm
Fault	E.OC1	E.OC1	Overcurrent shut-off during acceleration
	E.OC2	E.OC2	Overcurrent shut-off during constant speed
	E.OC3	E.OC3	Overcurrent shut-off during deceleration or stop
	E.OV1	E.OV1	Regenerative overvoltage shut-off during acceleration
	E.OV2	E.OV2	Regenerative overvoltage shut-off during constant speed
	E.OV3	E.OV3	Regenerative overvoltage shut-off during deceleration or stop
	E.THT	E.THT	Inverter overload shut-off (electronic thermal relay function)
	E.THM	E.THM	Motor overload shut-off (electronic thermal relay function)
	E.FIN	E.FIN	Fin overheat
	E.IPF	E.IPF	Instantaneous power failure
	E.UVT	E.UVT	Undervoltage
	E.ILF	E.ILF*	Input phase failure
	E.OLT	E.OLT	Stall prevention
	E.GF	E.GF	Output side earth (ground) fault overcurrent
	E.LF	E.LF	Output phase loss
	E.OHT	E.OHT	External thermal relay operation

	Operation Panel Indication		Meaning
Fault	E.PTC	E.PTC*	PTC thermistor operation
	E.OPT	E.OPT	Option alarm
	E.OP3	E.OP3	Communication option alarm
	E. 1 to E. 3	E.1 to E.3	Option fault
	E. PE	E.PE	Parameter storage device fault
	E.PUE	E.PUE	PU disconnection
	E.rET	E.RET	Retry count excess
	E.PE2	E.PE2*	Parameter storage device fault
	E. 6 E. 7 E.CPU	E.6 E.7 E.CPU	CPU error
	E.CTE	E.CTE	Operation panel power supply short circuit, RS-485 terminal power supply short circuit
	E.P24	E.P24	24V DC power output short circuit
	E.CdO	E.CDO*	Output current detection value exceeded
	E.IOH	E.IOH*	Inrush current limit circuit fault
	E.SER	E.SER*	Communication error (inverter)
	E.AIE	E.AIE*	Analog input error
	E.OS	E.OS	Overspeed occurence
	E.OSd	E.OSD	Speed deviation excess detection
	E.ECT	E.ECT	Signal loss detection
	E. Od	E.OD	Excessive position error
	E.MB1 to E.MB7	E.MB1 to E.MB7	Brake sequence error
	E.EP	E.EP	Encoder phase error
	E. 4	E.4	Converter overcurrent
	E. 8	E.8	Power supply fault
	E. 10	E.10	Converter transistor protection thermal operation (electronic thermal)
	E. 11	E.11	Opposite rotation deceleration fault
	E. 13	E.13	Internal circuit error
	E. 15	E.15	Converter circuit fault

* If an E.ILF, E.PTC, E.PE2, E.CDO, E.IOH or E.AIE fault occurs when using the FR-PU04, "Fault 14" is displayed on the FR-PU04.

A APPENDIX

A.1 Instructions for Compliance with the European Directives

A.1.1 EMC Directive

- Our view of transistorized inverters for the EMC Directive
  A transistorized inverter is a component designed for installation in an enclosure and for use with the other equipment to control the equipment/device. Therefore, we understand that the EMC Directive does not apply directly to transistorized inverters. For this reason, we do not place the CE mark on the transistorized inverters. (The CE mark is placed on inverters in accordance with the Low Voltage Directive.) CEMEP
- Compliance
  We understand that the general-purpose inverters are not covered directly by the EMC Directive. However, the EMC Directive applies to machines/equipment into which inverters have been incorporated, and these machines and equipment must carry the CE marks. EMC Installation Guidelines BCN-A21041-202
- Outline of installation method
  Install an inverter using the following methods:
  – Use the inverter with an European Standard-compliant noise filter.
  – For wiring between the inverter and motor, use shielded cables or run them in a metal piping and ground the cables on the inverter and motor sides with the shortest possible distance.
  – Insert a line noise filter and ferrite core into the power and control lines as required.
  Full information including the European Standard-compliant noise filter specifications are written in the technical information "EMC Installation Guidelines" (BCN-A21041-202). Please contact your sales representative.

A.1.2 Low Voltage Directive

We have self-confirmed our inverters as products compliant to the Low Voltage Directive (Conforming standard EN 61800-5-1) and placed the CE mark on the inverters.

Outline of instructions

- Do not use a residual current operated protective device (RCD) as an electric shock protector without connecting the equipment to the earth. Connect the equipment to the earth securely.
- Wire the earth terminal independently. (Do not connect two or more cables to one terminal.)
- Use the cable sizes on *page 6* at the ambient temperature indicated there.
  If the ambient temperature is different, select appropriate wire according to EN60204 ANNEX C TABLE 5.
- When tightening the screw, be careful not to damage the threads.
- For use as a product compliant with the Low Voltage Directive, use PVC cable whose size is indicated on *page 6*.
- Use the moulded case circuit breaker and magnetic contactor which conform to the EN or IEC Standard.
- Use the residual current operated protective device (RCD) of type B (breaker which can detect both AC and DC). However, be aware that also AC/DC sensitive earth leakage circuit breakers can be activated when turning the main power on and off and that this behaviour can be improved through the use of AC/DC sensitive earth leakage circuit breakers with adapted triggering curve designed for the inverter. If not, provide double or reinforced insulation between the inverter and other equipment, or put a transformer between the main power supply and inverter.
- Use the inverter under the conditions of overvoltage category II (usable regardless of the earth (ground) condition of the power supply), overvoltage category III (usable with the earthed-neutral system power supply, 400 V class only) specified in IEC664.
- To use the inverter under the conditions of pollution degree 3, install it in the enclosure of IP54 or higher.
- On the input and output of the inverter, use cables of the type and size set forth in EN60204 Appendix C.
- The operating capacity of the relay outputs (terminal symbols A, B, C) should be 30 V DC, 0.3 A. (Relay outputs are basically isolated from the inverter internal circuit.)
- Control circuit terminals on *page 4* are safely isolated from the main circuit

Environment

	During Operation	In Storage	During Transportation
Ambient temperature	−10°C to + 50°C	−20°C to +65°C	−20°C to +65°C
Ambient humidity	90% RH or less	90% RH or less	90% RH or less
Maximum altitude	1000m	1000m	10000m

Wiring protection

Provide the appropriate UL and cUL listed class T type fuse that are suitable for branch circuit protection in accordance with the table below

FR-A741-□□□-K	5.5	7.5	11	15	018.5	22	30	37	45	55
Rated voltage [V]	480V or more									
Fuse maximum allowable rating [A] *	40	70	80	90	110	150	175	200	250	300

* Maximum allowable rating by US National Electrical Code. Exact size must be chosen for each installation.

Motor overload protection

When using the electronic thermal relay as motor overload protection, set the rated motor current to *Pr. 9 Electronic thermal O/L relay*.

Electronic thermal relay function characteristic

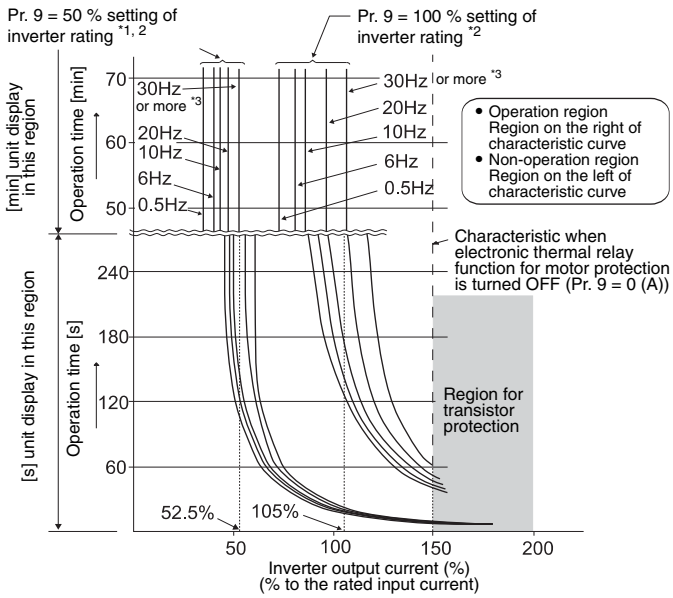

This function detects the overload (overheat) of the motor, stops the operation of the inverter's output transistor, and stops the output.
When using the Mitsubishi constant-torque motor set "1" or any of "13 to 18", "50", "53" or "54" in Pr. 71. This provides a 100 % continuous torque characteristic in the low-speed range. Set the rated current of the motor in Pr. 9.

*1 When a value 50 % of the inverter rated output current (current value) is set in Pr. 9.

*2 The % value denotes the percentage to the inverter rated output current. It is not the percentage to the motor rated current.

*3 When you set the electronic thermal relay function dedicated to the Mitsubishi constant-torque motor, this characteristic curve applies to operation at 6 Hz or higher.

CAUTION

- Protective function by electronic thermal relay function is reset by inverter power reset and reset signal input. Avoid unnecessary reset and power-off.
- When multiple motors are operated by a single inverter, protection cannot be provided by the electronic thermal relay function. Install an external thermal relay to each motor.
- When the difference between the inverter and motor capacities is large and the setting is small, the protective characteristics of the electronic thermal relay function will be deteriorated. In this case, use an external thermal relay.
- A special motor cannot be protected by the electronic thermal relay function. Use a external thermal relay.
- Electronic thermal relay does not function when 5 % or less of inverter rated current is set to electronic thermal relay setting.

A.1.3 Short circuit ratings

Suitable for use in a circuit capable of delivering not more than 5 kA rms symmetrical amperes, 528 V maximum.

A.2 Instructions for UL and cUL

(Standard to comply with: UL 508C, CSA C22.2 No.14)

A.2.1 General precaution

The bus capacitor discharge time is 10 minutes. Before starting wiring or inspection, switch power off, wait for more than 10 minutes, and check for residual voltage between terminal P/+ and N/– with a meter etc., to avoid a hazard of electrical shock.

A.2.2 Installation

The below types of inverter have been approved as products for use in enclosure and approval tests were conducted under the following conditions.

Design an enclosure so that the inverter ambient temperature, humidity and atmosphere satisfy the specifications. (Refer to *page 2*).

Wiring protection

For installation in the United States, branch circuit protection must be provided in accordance with the National Electrical Code and any applicable provincial codes.

For installation in Canada, branch circuit protection must be provided in accordance with the Canada Electrical Code and any applicable provincial codes.

As specified, UL Class T fuses or any faster acting fuse with the appropriate rating must be employed.

FR-A741-□□□-K	5.5	7.5	11	15	018.5	22	30	37	45	55
Rated voltage [V]	480V or more									
Fuse maximum allowable rating [A] *	40	70	80	90	110	150	175	200	250	300

* Maximum allowable rating by US National Electrical Code. Exact size must be chosen for each installation.

A.2.3 Short circuit ratings

Suitable for use in a circuit capable of delivering not more than 100 kA rms symmetrical amperes, 528 V maximum.

A.2.4 Wiring

- The cables used should be 75 °C copper cables.
- Tighten the terminal screws to the specified torques.
  Undertightening can cause a short or misoperation.
  Overtightening can cause the screws and unit to be damaged, resulting in a short or misoperation.
- Use the UL approved round crimping terminals. Crimp the terminals with the crimping tool recommended by the terminal manufacturer.

A.2.5 Motor overload protection

When using the electronic thermal relay as motor overload protection, set the rated motor current to *Pr. 9 Electronic thermal O/L relay*.

Electronic thermal relay function characteristic

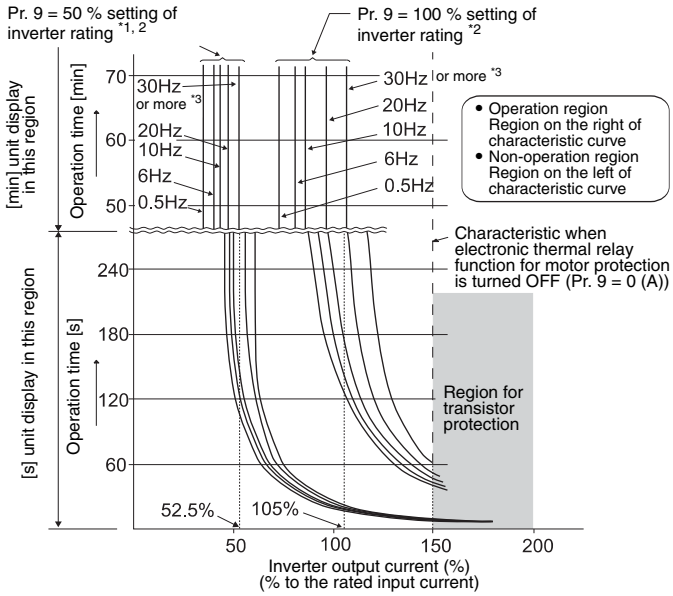

This function detects the overload (overheat) of the motor, stops the operation of the inverter's output transistor, and stops the output.
When using the Mitsubishi constant-torque motor set "1" or any of "13 to 18", "50", "53" or "54" in Pr. 71. This provides a 100 % continuous torque characteristic in the low-speed range. Set the rated current of the motor in Pr. 9.

*4 When a value 50 % of the inverter rated output current (current value) is set in Pr. 9.

*5 The % value denotes the percentage to the inverter rated output current. It is not the percentage to the motor rated current.

*6 When you set the electronic thermal relay function dedicated to the Mitsubishi constant-torque motor, this characteristic curve applies to operation at 6 Hz or higher.

CAUTION

- Protective function by electronic thermal relay function is reset by inverter power reset and reset signal input. Avoid unnecessary reset and power-off.
- When multiple motors are operated by a single inverter, protection cannot be provided by the electronic thermal relay function. Install an external thermal relay to each motor.
- When the difference between the inverter and motor capacities is large and the setting is small, the protective characteristics of the electronic thermal relay function will be deteriorated. In this case, use an external thermal relay.
- A special motor cannot be protected by the electronic thermal relay function. Use a external thermal relay.
- Electronic thermal relay does not function when 5 % or less of inverter rated current is set to electronic thermal relay setting.

MITSUBISHI ELECTRIC

HEADQUARTERS

MITSUBISHI ELECTRIC EUROPE B.V. **EUROPE**
German Branch
Gothaer Straße 8
D-40880 Ratingen
Phone: +49 (0)2102 / 486-0
Fax: +49 (0)2102 / 486-1120

MITSUBISHI ELECTRIC EUROPE B.V. **CZECH REPUBLIC**
Czech Branch
Radlická 714/113a
CZ-158 00 Praha 5
Phone: +420 (0)251 551 470
Fax: +420 (0)251-551-471

MITSUBISHI ELECTRIC EUROPE B.V. **FRANCE**
French Branch
25, Boulevard des Bouvets
F-92741 Nanterre Cedex
Phone: +33 (0)1 / 55 68 55 68
Fax: +33 (0)1 / 55 68 57 57

MITSUBISHI ELECTRIC EUROPE B.V. **IRELAND**
Irish Branch
Westgate Business Park, Ballymount
IRL-Dublin 24
Phone: +353 (0)1 4198800
Fax: +353 (0)1 4198890

MITSUBISHI ELECTRIC EUROPE B.V. **ITALY**
Italian Branch
Viale Colleoni 7
I-20041 Agrate Brianza (MI)
Phone: +39 039 / 60 53 1
Fax: +39 039 / 60 53 312

MITSUBISHI ELECTRIC EUROPE B.V. **SPAIN**
Spanish Branch
Carretera de Rubí 76-80
E-08190 Sant Cugat del Vallés (Barcelona)
Phone: 902 131121 // +34 935653131
Fax: +34 935891579

MITSUBISHI ELECTRIC EUROPE B.V. **UK**
UK Branch
Travellers Lane
UK-Hatfield, Herts. AL10 8XB
Phone: +44 (0)1707 / 27 61 00
Fax: +44 (0)1707 / 27 86 95

MITSUBISHI ELECTRIC CORPORATION **JAPAN**
Office Tower "Z" 14 F
8-12,1 chome, Harumi Chuo-Ku
Tokyo 104-6212
Phone: +81 3 622 160 60
Fax: +81 3 622 160 75

MITSUBISHI ELECTRIC AUTOMATION, Inc. **USA**
500 Corporate Woods Parkway
Vernon Hills, IL 60061
Phone: +1 847 478 21 00
Fax: +1 847 478 22 53

EUROPEAN REPRESENTATIVES

GEVA **AUSTRIA**
Wiener Straße 89
AT-2500 Baden
Phone: +43 (0)2252 / 85 55 20
Fax: +43 (0)2252 / 488 60

TEHNIKON **BELARUS**
Oktyabrskaya 16/5, Off. 703-711
BY-220030 Minsk
Phone: +375 (0)17 / 210 46 26
Fax: +375 (0)17 / 210 46 26

Koning & Hartman b.v. **BELGIUM**
Woluwelaan 31
BE-1800 Vilvoorde
Phone: +32 (0)2 / 257 02 40
Fax: +32 (0)2 / 257 02 49

INEA BH d.o.o. **BOSNIA AND HERZEGOVINA**
Aleja Lipa 56
BA-71000 Sarajevo
Phone: +387 (0)33 / 921 164
Fax: +387 (0)33 / 524 539

AKHNATON **BULGARIA**
4 Andrej Ljapchev Blvd. Pb 21
BG-1756 Sofia
Phone: +359 (0)2 / 817 6004
Fax: +359 (0)2 / 97 44 06 1

INEA CR d.o.o. **CROATIA**
Losinjska 4 a
HR-10000 Zagreb
Phone: +385 (0)1 / 36 940 - 01/ -02/ -03
Fax: +385 (0)1 / 36 940 - 03

AutoCont C.S. s.r.o. **CZECH REPUBLIC**
Technologická 374/6
CZ-708 00 Ostrava-Pustkovec
Phone: +420 595 691 150
Fax: +420 595 691 199

B:TECH A.S. **CZECH REPUBLIC**
U Borové 69
CZ-58001 Havlíčkův Brod
Phone: +420 (0)569 777 777
Fax: +420 (0)569-777 778

Beijer Electronics A/S **DENMARK**
Lykkegårdsvej 17, 1.
DK-4000 Roskilde
Phone: +45 (0)46/ 75 76 66
Fax: +45 (0)46 / 75 56 26

Beijer Electronics Eesti OÜ **ESTONIA**
Pärnu mnt.160i
EE-11317 Tallinn
Phone: +372 (0)6 / 51 81 40
Fax: +372 (0)6 / 51 81 49

Beijer Electronics OY **FINLAND**
Jaakonkatu 2
FIN-01620 Vantaa
Phone: +358 (0)207 / 463 500
Fax: +358 (0)207 / 463 501

UTECO A.B.E.E. **GREECE**
5, Mavrogenous Str.
GR-18542 Piraeus
Phone: +30 211 / 1206 900
Fax: +30 211 / 1206 999

MELTRADE Ltd. **HUNGARY**
Fertő utca 14.
HU-1107 Budapest
Phone: +36 (0)1 / 431-9726
Fax: +36 (0)1 / 431-9727

Beijer Electronics SIA **LATVIA**
Vestienas iela 2
LV-1035 Riga
Phone: +371 (0)784 / 2280
Fax: +371 (0)784 / 2281

Beijer Electronics UAB **LITHUANIA**
Savanoriu Pr. 187
LT-02300 Vilnius
Phone: +370 (0)5 / 232 3101
Fax: +370 (0)5 / 232 2980

EUROPEAN REPRESENTATIVES

INTEHSIS srl **MOLDOVA**
bld. Traian 23/1
MD-2060 Kishinev
Phone: +373 (0)22 / 66 4242
Fax: +373 (0)22 / 66 4280

Koning & Hartman b.v. **NETHERLANDS**
Haarlerbergweg 21-23
NL-1101 CH Amsterdam
Phone: +31 (0)20 / 587 76 00
Fax: +31 (0)20 / 587 76 05

Beijer Electronics AS **NORWAY**
Postboks 487
NO-3002 Drammen
Phone: +47 (0)32 / 24 30 00
Fax: +47 (0)32 / 84 85 77

MPL Technology Sp. z o.o. **POLAND**
Ul. Krakowska 50
PL-32-083 Balice
Phone: +48 (0)12 / 630 47 00
Fax: +48 (0)12 / 630 47 01

Sirius Trading & Services srl **ROMANIA**
Aleea Lacul Morii Nr. 3
RO-060841 Bucuresti, Sector 6
Phone: +40 (0)21 / 430 40 06
Fax: +40 (0)21 / 430 40 02

Craft Con. & Engineering d.o.o. **SERBIA**
Bulevar Svetog Cara Konstantina 80-86
SER-18106 Nis
Phone: +381 (0)18 / 292-24-4/5
Fax: +381 (0)18 / 292-24-4/5

INEA SR d.o.o. **SERBIA**
Izletnicka 10
SER-113000 Smederevo
Phone: +381 (0)26 / 617 163
Fax: +381 (0)26 / 617 163

AutoCont Control s.r.o. **SLOVAKIA**
Radlinského 47
SK-02601 Dolny Kubin
Phone: +421 (0)43 / 5868210
Fax: +421 (0)43 / 5868210

CS MTrade Slovensko, s.r.o. **SLOVAKIA**
Vajanskeho 58
SK-92101 Piestany
Phone: +421 (0)33 / 7742 760
Fax: +421 (0)33 / 7735 144

INEA d.o.o. **SLOVENIA**
Stegne 11
SI-1000 Ljubljana
Phone: +386 (0)1 / 513 8100
Fax: +386 (0)1 / 513 8170

Beijer Electronics AB **SWEDEN**
Box 426
SE-20124 Malmö
Phone: +46 (0)40 / 35 86 00
Fax: +46 (0)40 / 35 86 02

Econotec AG **SWITZERLAND**
Hinterdorfstr. 12
CH-8309 Nürensdorf
Phone: +41 (0)44 / 838 48 11
Fax: +41 (0)44 / 838 48 12

GTS **TURKEY**
Darülaceze Cad. No. 43 KAT. 2
TR-34384 Okmeydanı-Istanbul
Phone: +90 (0)212 / 320 1640
Fax: +90 (0)212 / 320 1649

CSC Automation Ltd. **UKRAINE**
4-B, M. Raskovoyi St.
UA-02660 Kiev
Phone: +380 (0)44 / 494 33 55
Fax: +380 (0)44 / 494-33-66

EURASIAN REPRESENTATIVES

Kazpromautomatics Ltd. **KAZAKHSTAN**
Mustafina Str. 7/2
KAZ-470046 Karaganda
Phone: +7 7212 / 50 11 50
Fax: +7 7212 / 50 11 50

CONSYS **RUSSIA**
Promyshlennaya st. 42
RU-198099 St. Petersburg
Phone: +7 812 / 325 36 53
Fax: +7 812 / 325 36 53

ELECTROTECHNICAL SYSTEMS **RUSSIA**
Derbenevskaya st. 11A, Office 69
RU-115114 Moscow
Phone: +7 495 / 744 55 54
Fax: +7 495 / 744 55 54

ELEKTROSTILY **RUSSIA**
Rubzowskaja nab. 4-3, No. 8
RU-105082 Moscow
Phone: +7 495 / 545 3419
Fax: +7 495 / 545 3419

RPS-AUTOMATIKA **RUSSIA**
Budennovsky 97, Office 311
RU-344007 Rostov on Don
Phone: +7 8632 / 22 63 72
Fax: +7 8632 / 219 45 51

STC Drive Technique **RUSSIA**
1-st Magistralny tupik, 10, Bld. 1
RU-123290 Moscow
Phone: +7 495 / 786 21 00
Fax: +7 495 / 786 21 01

MIDDLE EAST REPRESENTATIVE

SHERF Motion Techn. Ltd. **ISRAEL**
Rehov Hamerkava 19
IL-58851 Holon
Phone: +972 (0)3 / 559 54 62
Fax: +972 (0)3 / 556 01 82

AFRICAN REPRESENTATIVE

CBI Ltd. **SOUTH AFRICA**
Private Bag 2016
ZA-1600 Isando
Phone: + 27 (0)11 / 928 2000
Fax: + 27 (0)11 / 392 2354