SINAMICS G120P

Power Module PM230 IP55/UL Type 12

Hardware Installation Manual · 11/2014

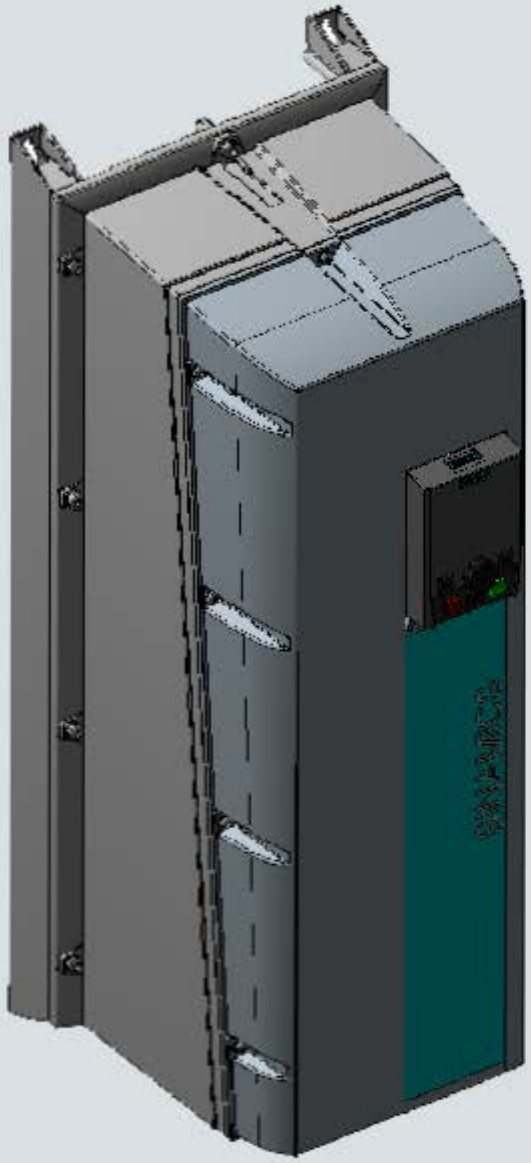

SINAMICS

Answers for industry.

SIEMENS

SIEMENS

SINAMICS

SINAMICS G120P
PM230 Power Module IP55

Hardware Installation Manual

Introduction 1

Safety notes 2

Installing / mounting 3

Connecting 4

Service and maintenance 5

Technical specifications 6

Appendix 7

11/2014

A5E35319202B AA

Legal information

Warning notice system

This manual contains notices you have to observe in order to ensure your personal safety, as well as to prevent damage to property. The notices referring to your personal safety are highlighted in the manual by a safety alert symbol, notices referring only to property damage have no safety alert symbol. These notices shown below are graded according to the degree of danger.

⚠DANGER
indicates that death or severe personal injury **will** result if proper precautions are not taken.

⚠WARNING
indicates that death or severe personal injury **may** result if proper precautions are not taken.

⚠CAUTION
indicates that minor personal injury can result if proper precautions are not taken.

NOTICE
indicates that property damage can result if proper precautions are not taken.

If more than one degree of danger is present, the warning notice representing the highest degree of danger will be used. A notice warning of injury to persons with a safety alert symbol may also include a warning relating to property damage.

Qualified Personnel

The product/system described in this documentation may be operated only by **personnel qualified** for the specific task in accordance with the relevant documentation, in particular its warning notices and safety instructions. Qualified personnel are those who, based on their training and experience, are capable of identifying risks and avoiding potential hazards when working with these products/systems.

Proper use of Siemens products

Note the following:

⚠WARNING
Siemens products may only be used for the applications described in the catalog and in the relevant technical documentation. If products and components from other manufacturers are used, these must be recommended or approved by Siemens. Proper transport, storage, installation, assembly, commissioning, operation and maintenance are required to ensure that the products operate safely and without any problems. The permissible ambient conditions must be complied with. The information in the relevant documentation must be observed.

Trademarks

All names identified by ® are registered trademarks of Siemens AG. The remaining trademarks in this publication may be trademarks whose use by third parties for their own purposes could violate the rights of the owner.

Disclaimer of Liability

We have reviewed the contents of this publication to ensure consistency with the hardware and software described. Since variance cannot be precluded entirely, we cannot guarantee full consistency. However, the information in this publication is reviewed regularly and any necessary corrections are included in subsequent editions.

Siemens AG
Division Digital Factory
Postfach 48 48
90026 NÜRNBERG
GERMANY

A5E35319202B AA
℗ 11/2014 Subject to change

Copyright © Siemens AG 2010 - 2014.
All rights reserved

Table of contents

1 Introduction 7
1.1 System overview of the SINAMICS G120P 7
1.2 Documents for the Inverter 12
2 Safety notes 13
3 Installing / mounting 19
3.1 Air cooling requirements 21
3.2 Dimensions and drill patterns 22
3.3 Control Unit installation 29
3.4 Fitting the IOP and the blanking plate 34
4 Connecting 37
4.1 Power distribution systems 38
4.2 Operation only with grounded (TN) supplies 38
4.3 Motor cable lengths and cross-sections 39
4.4 Access to power and motor terminals 43
4.5 Cable preparation 46
4.6 Wiring Sequence 47
4.7 Power and motor connections 50
4.8 Gland plate installation 51
4.9 EMC guidelines 54
4.9.1 Avoiding electromagnetic interference 54
4.9.2 Connections and interference suppression 54
4.9.3 Cabling 54
4.9.4 Equipotential bonding 55
4.9.5 Inverter shielding in detail, FSA to FSC 58
5 Service and maintenance 61
5.1 Maintenance 61
5.1.1 Maintenance 61
5.1.2 Cleaning 61
5.2 Replacing components 62
5.2.1 Replacing the cooling fan 62
5.2.1.1 Replacement fans 69
5.3 Spares and accessories 71
6 Technical specifications 73
6.1 General data, PM230, IP55 74

6.2 Temperature, altitude and voltage derating PM230 ... 75
6.3 Technical data ... 77
6.3.1 Input current operation ... 77
6.4 Current reduction depending on pulse frequency ... 82
7 Appendix ... 83
7.1 Electromagnetic Compatibility ... 83
7.2 Definition of the EMC Environment and Categories ... 84
7.3 EMC overall performance ... 86
7.4 Standards ... 88
7.5 Abbreviations ... 89
Index ... 91

Introduction 1

1.1 System overview of the SINAMICS G120P

The SINAMICS G120 range

The SINAMICS G120 inverter has been designed for the accurate and efficient control of the speed and torque for three-phase motors. The SINAMICS G120P is a specific sub-system focused on the HVAC industry sector and for pump and fan applications. .

The PM230 Power Modules supply the necessary power to the Control Units and the attached motor. The PM230 output ranges from 0.37 kW to 90 kW and is rated IP55 (UL Type 12).

See the respective manual for specific functions and features.

Available Power Modules PM230

The various types of PM230 Power Modules are listed below. The given power rating values are defined for "low overload" operation.

- PM230 Power Modules with integrated filter Class A
  3 AC, 380 V … 480 V ± 10%, IP55 (UL Type 12), Frame size A … F, 0,37 kW … 90.0 kW
- PM230 Power Modules with integrated filter Class B
  3 AC, 380 V … 480 V ± 10%, IP55 (UL Type 12), Frame size A … F, 0,37 kW … 90.0 kW

Control Unit - CU230P-2

The CU230P-2 is a Control Unit that has been optimized for pumps and fans. It can be operated with the PM230 Power Module.

- CU230P-2 HVAC with RS485 interface for USS, Modbus RTU and BacNet MS/TP
- CU230P-2 CAN with CANopen interface
- CU230P-2 DP with PROFIBUS DP interface

The Control Unit can be commissioned either using the STARTER commissioing software or the optional Intelligent Operator Panel (IOP).

You can save all the settings you enter during commissioning and operation to a memory card.

Intelligent Operator Panel

The Intelligent Operator Panel (IOP) has been designed to enhance the interface and communications capabilities of the SINAMICS G120P Inverters.

Rating label information

Every Power Module has a rating label which details the specifications of the Power Module.

The specifications shown on the rating label can vary due to the requirements of specific regulations and compliance standards imposed by the country of origin and the final destination of the product.

Detailed below is an explanation of all the information that might appear on a typical rating label of a Power Module.

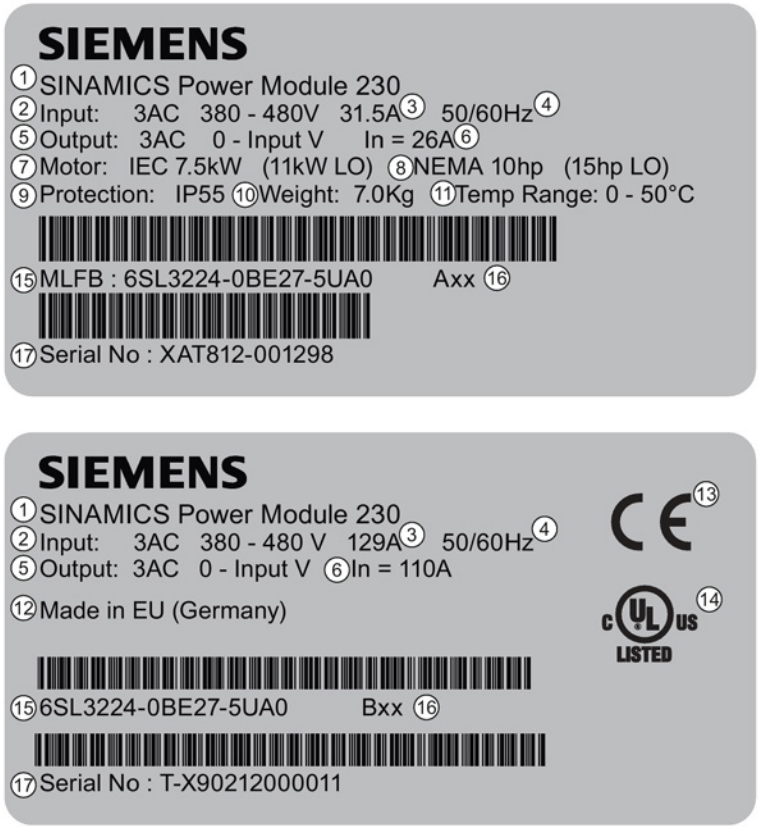

Figure 1-1 Typical Power Module rating labels

Table 1- 1 Explanation of Power Module rating label information

Item	Description	Notes
1	Product name	
2	Input voltage range	
3	Rated input current	
4	Nominal input frequency	
5	Output voltage range	This is determined by the range of the input voltage range.
6	Nominal current	
7	European motor rating	
8	North America motor rating	
9	Protection rating	The IP rating denotes the protection the product has against environmental conditions.
10	Weight	It is the weight of the product only.
11	Temperature range	Is the operating temperature range of the the product.
12	The country of origin and manufacture	
13	European Low Voltage Directive Compliance	Full details are contained the Operating Instructions or Hardware Installation Manual for the product.
14	Underwriters Laboratories listed equipment standard	Full details are contained the Operating Instructions or Hardware Installation Manual for the product.
15	Order number	
16	Hardware version	
17	Serial number	

Order Number

Each type of Power Module has a unique order number, also known as the MLFB (Maschinenlesbare Fabrikatebezeichnung). The order number contains detailed information regarding the type and specification of the product. In the figure below details of how the order number is constructed are given.

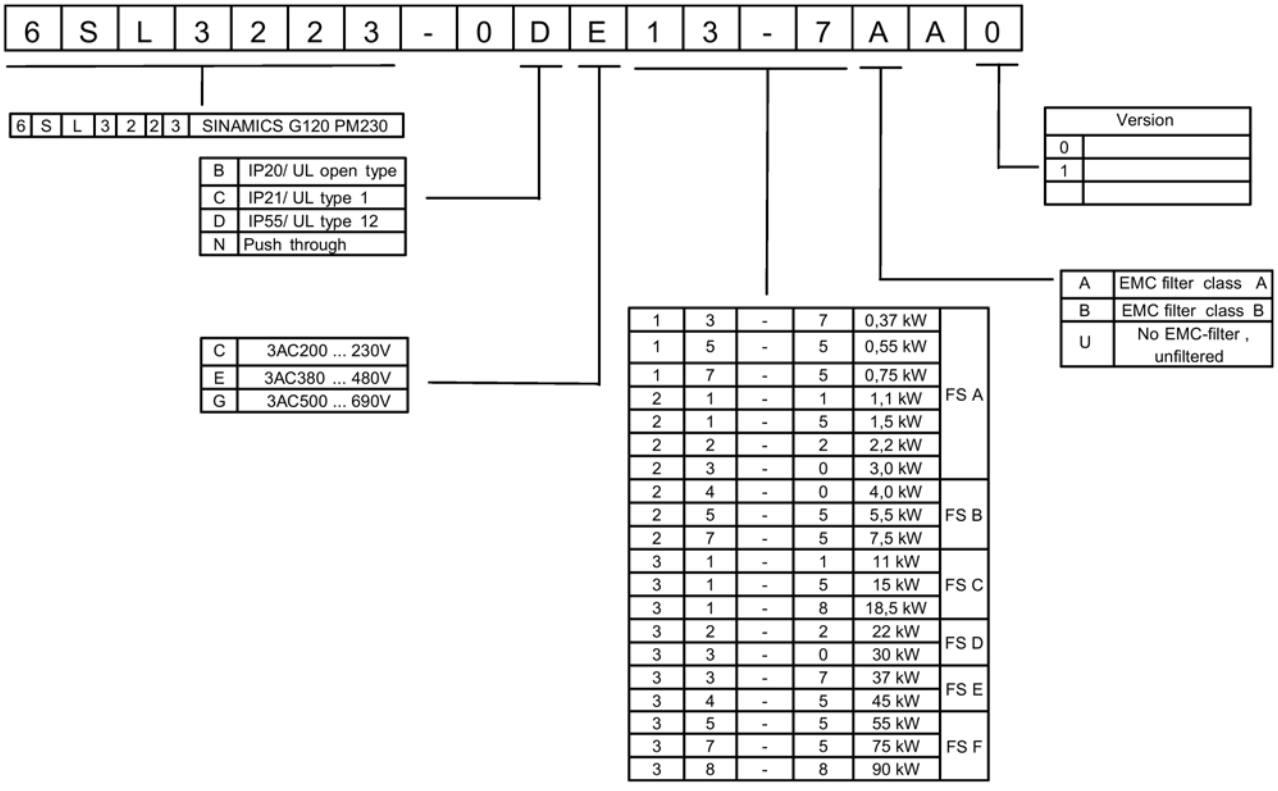

Figure 1-2 Breakdown of Order Number (MLFB)

Block diagram PM230 FSA ... FSF

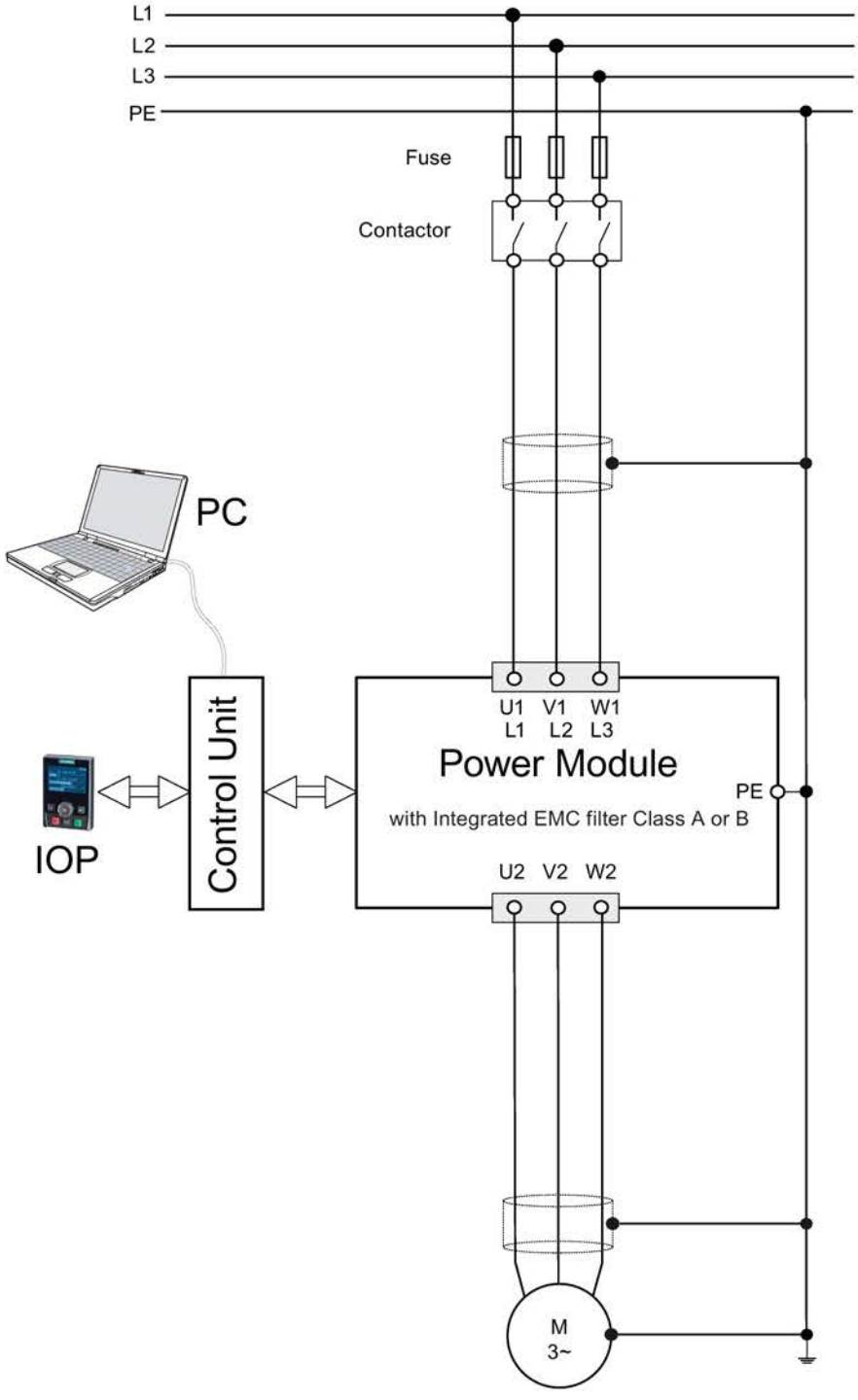

Figure 1-3 Block diagram PM230

1.2 Documents for the Inverter

Available technical documentation

Comprehensive information and support tools are available from the Service and Support internet site at the following link:

- http://support.automation.siemens.com

Examples of the types of documentation and support tools available for downloading are:

- Getting Started Guides
- Operating Instructions
- Hardware Installation Manuals
- Parameter Manuals
- STARTER commissioning software

Documents for the Control Unit CU230P-2

Since the CU230P-2 Control Unit has been designed to support the HVAC environment; the following documents for the CU230P-2 can be found at the links below:

- Getting Started Guide
  http://support.automation.siemens.com/WW/view/en/36175006
- Operating Instructions
  http://support.automation.siemens.com/WW/view/en/36175032
- Parameter Manual
  http://support.automation.siemens.com/WW/view/en/36147790

Further internet addresses

You find various application examples to the inverters under the following link:

- http://support.automation.siemens.com/WW/view/en/20208582/136000

Safety notes 2

Safety Instructions

The following Warnings, Cautions and Notes are provided for your safety and as a means of preventing damage to the product or components in the connected machines. This section lists Warnings, Cautions and Notes, which apply generally when handling the inverter, classified as General, Transport and Storage, Commissioning, Operation, Repair and Dismantling and Disposal.

Specific Warnings, Cautions and Notes that apply to particular activities are listed at the beginning of the relevant sections in this manual and are repeated or supplemented at critical points throughout these sections.

Please read the information carefully, since it is provided for your personal safety and will also help prolong the service life of your inverter and the equipment to which it is connected.

It has to be ensured by the machine manufacturer, that the line-side overcurrent protection equipment interrupts within 5 s (immovable equipment and modules in immovable equipment) in the case of minimum fault current (current on complete insulation failure to accessible conductive parts that are not live during operation and maximum current loop resistance).

The machine manufacturer must ensure that the voltage drop between the main power supply and the power drive system, during operation, does not exceed 1 % (UK < 1 %).

General

⚠ WARNING

This equipment contains dangerous voltages and controls potentially dangerous rotating mechanical parts. Non-compliance with the warnings or failure to follow the instructions contained in this manual can result in loss of life, severe personal injury or serious damage to property.

Protection in case of direct contact by means of SELV / PELV is only permissible in areas with equipotential bonding and in dry indoor rooms. If these conditions are not fulfilled, other protective measures against electric shock must be applied e.g. protective insulation.

Only suitably qualified personnel should work on this equipment, and only after becoming familiar with all safety notices, installation, operation and maintenance procedures contained in this manual. The successful and safe operation of this equipment is dependent upon its proper handling, installation, operation and maintenance.

As the earth leakage for this product can be greater than 3.5 mA a.c., a fixed earth connection is required and the minimum size of the protective earth conductor shall comply with the local safety regulations for high leakage current equipment. In this case a permanent, immovable connection is required and the following measures must also be taken:

- Minimum PE conductor cross-section of 10 mm^2.
- Laying a second PE conductor using separate terminals, with a cross-section that, in itself, fulfills all the requirements for PE conductors.
- Self-actuating switch-off of the power supply if the PE conductor is interrupted.
- Insertion of a two-winding transformer into the power supply.

Due to the high inrush currents in the earth conductor, this product is not compatible with an RCD (also referred to as an ELCB or RCCB).

The power supply, DC and motor terminals, the brake and thermistor cables can carry dangerous voltages even if the inverter is inoperative. Wait at least five minutes to allow the unit to discharge after switching off the line supply before carrying out any installation work.

It is strictly prohibited for any mains disconnection to be performed on the motor-side of the system; any disconnection of the mains must be performed on the mains-side of the Inverter.

When connecting the line supply to the Inverter, make sure that the terminal case of the motor is closed.

During operation and for a short time after switching-off the Inverter, the surfaces of the Inverter can reach a high temperature.

This equipment is capable of providing internal motor overload protection according to UL508C. Refer to P0610 and P0335, i^2t is ON by default.

When changing from the ON to OFF-state of an operation if an LED or other similar display is not lit or active; this does not indicate that the unit is switched-off or powered-down.

The inverter must always be grounded.

Isolate the line supply before making or changing connections to the unit.

Use of mobile radio devices (e.g. telephones, walkie-talkies) with a transmission power > 1 W in the immediate vicinity of the devices (< 1.8 m) can interfere with the functioning of the equipment.

Do not disconnect power connections when the Inverter and motor are under load.

Ensure that the inverter is configured for the correct supply voltage. The inverter must not be connected to a higher voltage supply.

Static discharges on surfaces or interfaces that are not generally accessible (e.g. terminal or connector pins) can cause malfunctions or defects. Therefore, when working with inverters or inverter components, ESD protective measures should be observed.

Take particular notice of the general and regional installation and safety regulations regarding work on dangerous voltage installations (e.g. EN 50178) as well as the relevant regulations regarding the correct use of tools and personal protective equipment (PPE).

⚠ CAUTION

Children and the general public must be prevented from accessing or approaching the equipment!

This equipment may only be used for the purpose specified by the manufacturer. Unauthorized modifications and the use of spare parts and accessories that are not sold or recommended by the manufacturer of the equipment can cause fires, electric shocks and injuries.

Note

Keep this manual within easy reach of the equipment and make it available to all users.

Whenever measuring or testing has to be performed on live equipment, the regulations of Safety Code BGV A2 must be observed, in particular § 8 "Permissible Deviations when Working on Live Parts". Suitable electronic tools should be used.

Before installing and commissioning, please read these safety instructions and warnings carefully and all the warning labels attached to the equipment. Make sure that the warning labels are kept in a legible condition and replace missing or damaged labels.

Transport and storage

⚠ WARNING

Correct transport, storage as well as careful operation and maintenance are essential for the proper and safe operation of the equipment.

⚠ CAUTION

Protect the equipment against physical shocks and vibration during transport and storage. It is important that the equipment is protected from water (rainfall) and excessive temperatures.

Commissioning

⚠ WARNING

Working on the equipment by unqualified personnel or failure to comply with warnings can result in severe personal injury or serious damage to material. Only suitably qualified personnel trained in the setup, installation, commissioning and operation of the product should carry out work on the equipment.

⚠ CAUTION

Cable connection

The control cables must be laid separately from the power cables. Carry out the connections as shown in the installation section in this manual, to prevent inductive and capacitive interference from affecting the correct function of the system.

Operation

⚠ WARNING

The Inverter operate at high voltages.

When operating electrical devices, it is impossible to avoid applying hazardous voltages to certain parts of the equipment.

Emergency Stop facilities according to EN 60204, IEC 204 (VDE 0113) must remain operative in all operating modes of the control equipment. Any disengagement of the Emergency Stop facility must not lead to an uncontrolled or an undefined restart of the equipment.

Certain parameter settings may cause the Inverter to restart automatically after an input power failure, for example, the automatic restart function.

Wherever faults occurring in the control equipment can lead to substantial material damage or even grievous bodily injury (that is, potentially dangerous faults), additional external precautions must be taken or facilities provided to ensure or enforce safe operation, even when a fault occurs (e.g. independent limit switches, mechanical interlocks, etc.).

Motor parameters must be accurately configured for motor overload protection to operate correctly.

This equipment is capable of providing internal motor overload protection according to UL508C.

Only Inverters with fail-safe functions can be used as an "Emergency Stop Mechanism" (see EN 60204, section 9.2.5.4).

Repair

⚠ WARNING

Repairs on equipment may only be carried out by Siemens Service, by repair centers authorized by Siemens or by authorized personnel who are thoroughly acquainted with all the warnings and operating procedures contained in this manual.

Any defective parts or components must be replaced using parts contained in the relevant spare parts list.

Disconnect the power supply before opening the equipment for access.

Dismantling and disposal

NOTICE

The packaging of the Inverter is re-usable. Retain the packaging for future use.

Easy-to-release screw and snap connectors allow you to break the unit down into its component parts. You can recycle these component parts, dispose of them in accordance with local requirements or return them to the manufacturer.

Installing / mounting

3

⚠ WARNING
To ensure the safe operation of the equipment, it must be installed and commissioned by qualified personnel in full compliance with the warnings laid down in this manual. Take particular note of the general and regional installation and safety regulations regarding work on dangerous voltage installation (e.g. EN 61800-5-1) as well as the relevant regulations regarding the correct use of tools and personal protective equipment (PPE).

General rules for protecting Power Modules against environmental effects

To ensure that the Power Module is installed in the correct environmental conditions, please ensure that you adhere to the following guidelines:

- Power Modules FSA … FSF are designed for degree of protection IP55. There is limited protection against the ingress of dust (no damaging deposits) and against splashing water from all directions (slight ingress of water is permissible).
- Although the Power Module is protected against the ingress of water, this protection is dependent however on all the seals being correctly installed (e.g. seals when mounting an operator panel).
- Direct solar radiation is not permissible
- Keep the Power Modules free of dust and dirt.
- Keep the Power Modules away from solvents and chemicals.
- The temperature of the Power Module must lie within the operating temperature range.
- Ensure that the correct level of ventilation and air flow is provided.
- Ensure that all Power Modules are grounded according to the guidelines provided in this document.

WARNING

Heat sink fixing screws

The heatsinks of the PM230 IP55 (FSA to FSC) Power Modules have several screws to fix them to the main housing of the Power Module. It is NOT permissible that these screws are removed. The fixing screws of the heat sink are shown in the adjacent diagram (with red circles).

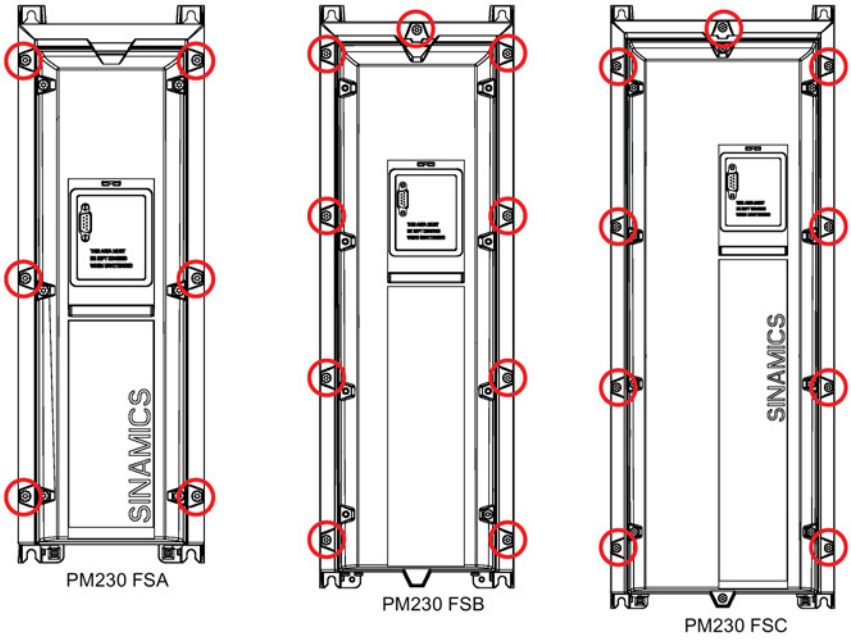

CAUTION

Mounting and cooling the Power Module

The Power Module should be mounted on a wall or panel. This ensures that the rear module panel is located on a flat surface, and the correct airflow is achieved to optimally cool the Power Module. If the Power Module is not mounted onto a wall panel, then the rear panel of the heat sink must be covered with a flat surface. This then ensures that the correct airflow is achieved.

It must be ensured that the internal fan of the Power Module is correctly mounted before the inverter is commissioned. If this is not observed, then the inverter can overheat.

3.1 Air cooling requirements

Air cooling requirements

Table 3- 1 Air cooling requirements for operation with rated power (LO)

Frame size	LO power rating	Required cooling air flow	
		l/s	CFM
FSA	0.37 kW ... 3.0 kW	7	14
FSB	4.0 kW ... 7.5 kW	9	19
FSC	11.0 kW ... 18.5 kW	20	40
FSD	22.0 kW ... 30.0 kW	55	120
FSE	37.0 kW ... 45.0 kW	110	240
FSF	55.0 kW ... 90 kW	150	320

Table 3- 2 Power losses of Power Module components in Watts (@ nominal voltage)

	For Power Module					
Power losses of …	FSA	FSB	FSC	FSD	FSE	FSF
Power Module	20 … 150	25 … 300	30 … 500	440 ... 720	1000 ... 1300	1500 ... 2500
Control Unit	<40					

Further information is given in the technical specifications.

3.2 Dimensions and drill patterns

Dimensions, drill patterns and minimum distances

The dimension drawings for all frame sizes for the SINAMICS G120P Power Module PM230 are shown in the figures and not true to scale.

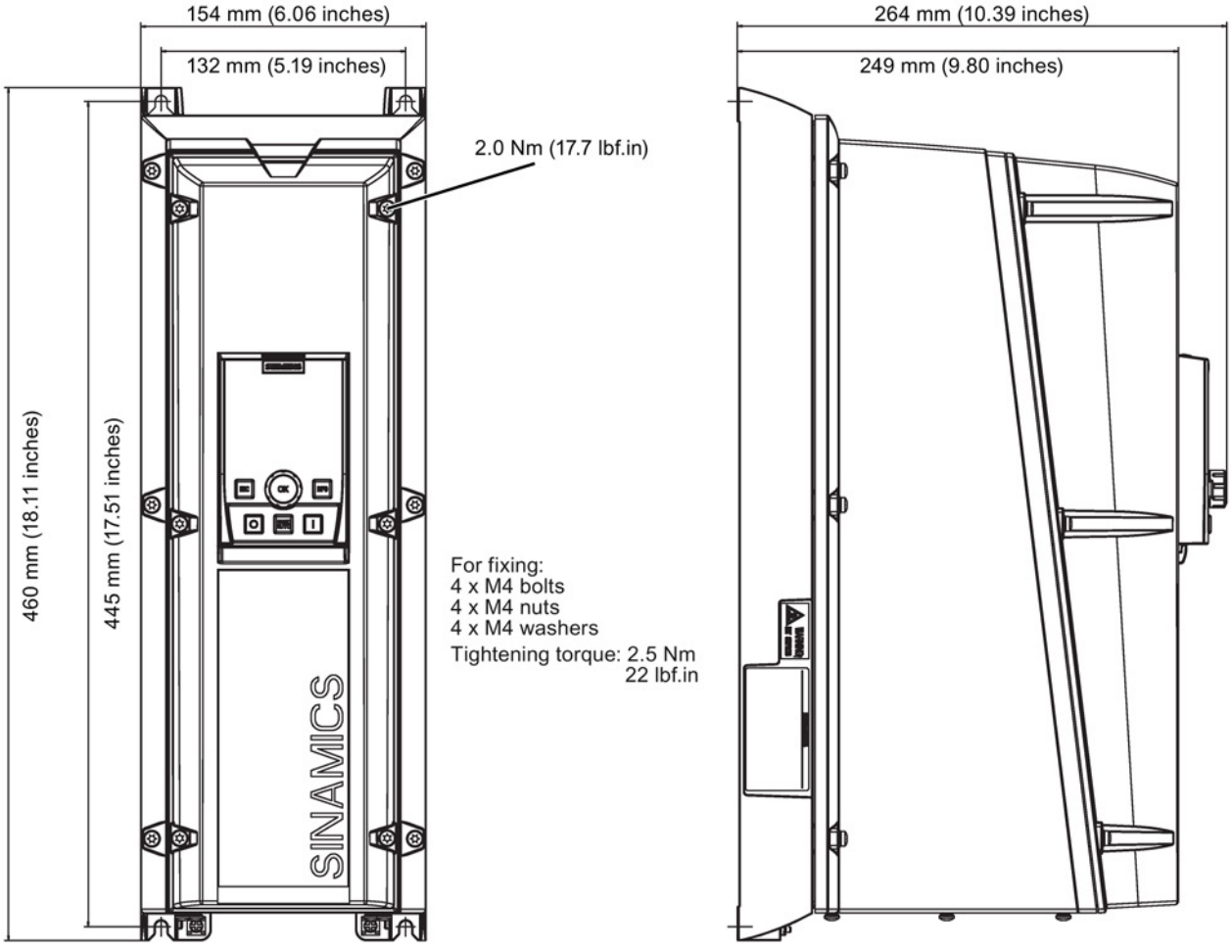

Figure 3-1 Dimensions and drill pattern, PM230 FSA (0.37 - 3.0 kW)

Table 3- 3 Minimum distances for mounting

Minimum distances FSA		Note
side by side	0 mm 0 inches	
above	100 mm 3.93 inches	
below	100 mm 3.93 inches	

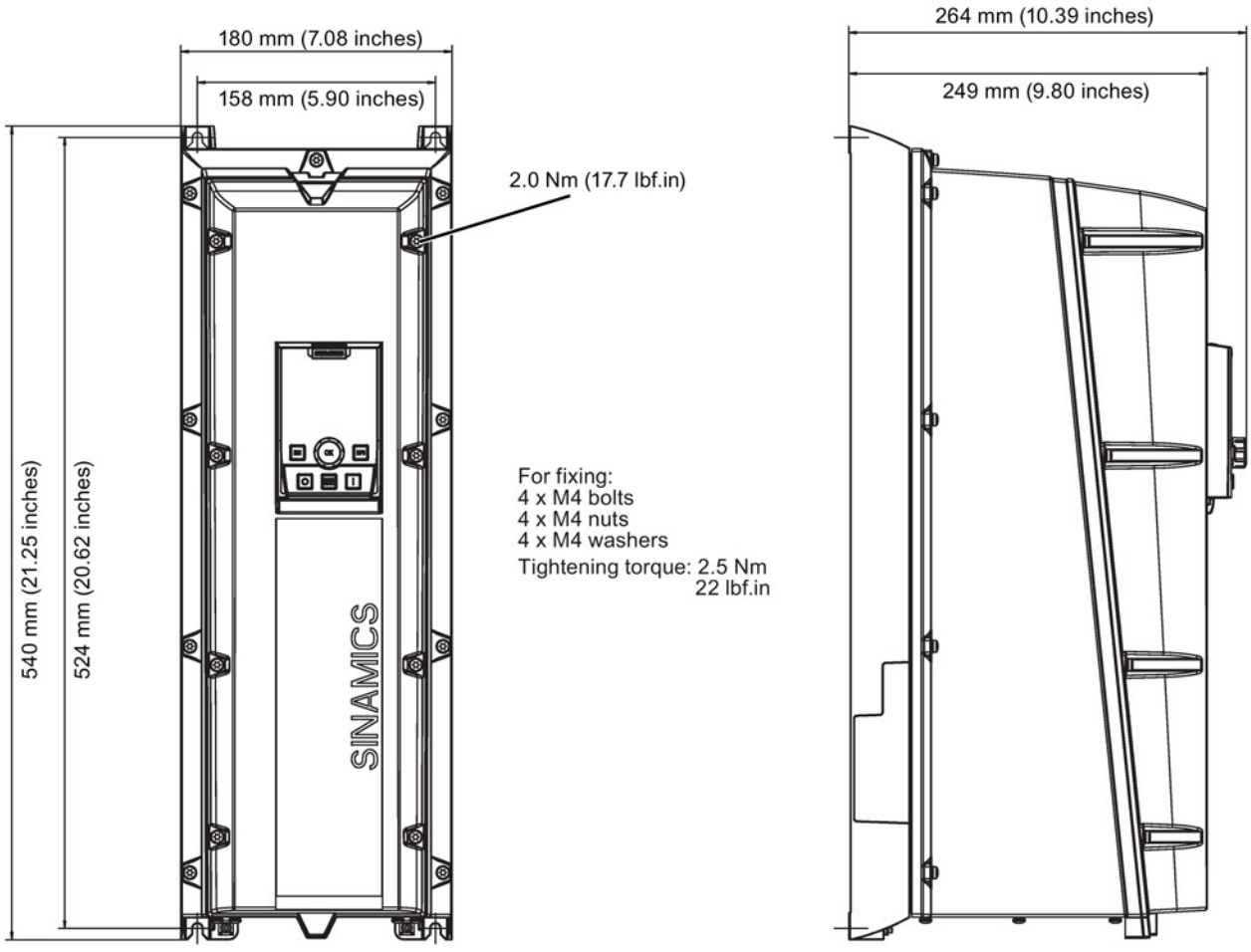

Figure 3-2 Dimensions and drill pattern, PM230 FSB (4.0 - 7.5 kW)

Table 3- 4 Minimum distances for mounting

Minimum distances FSB		Note
side by side	0 mm 0 inches	
above	100 mm 3.93 inches	
below	100 mm 3.93 inches	

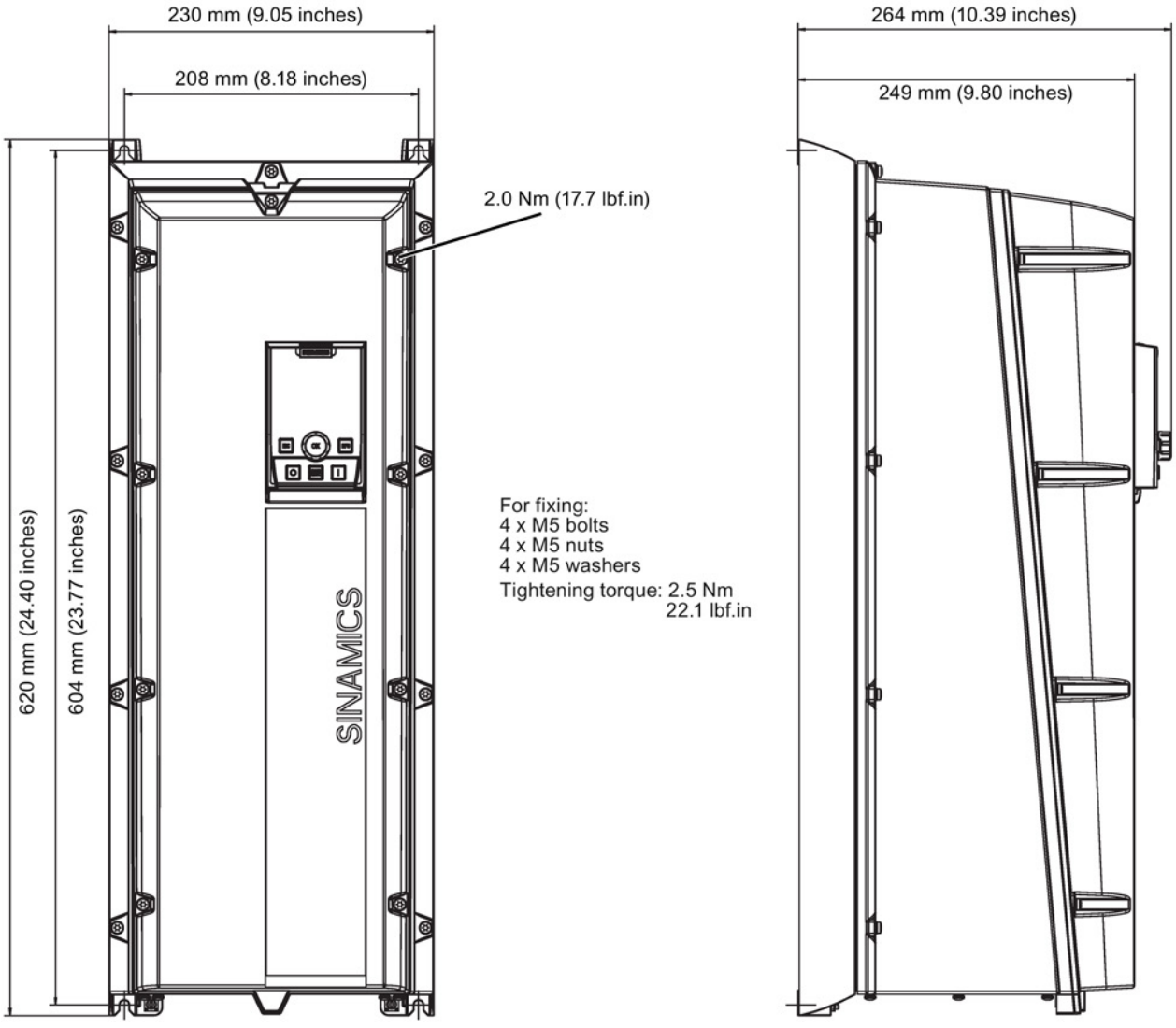

Figure 3-3 Dimensions and drill pattern, PM230 FSC (11.0 - 18.5 kW)

Table 3- 5 Minimum distances for mounting

Minimum distances FSC		Note
side by side	0 mm 0 inches	
above	125 mm 4.92 inches	
below	125 mm 4.92 inches	

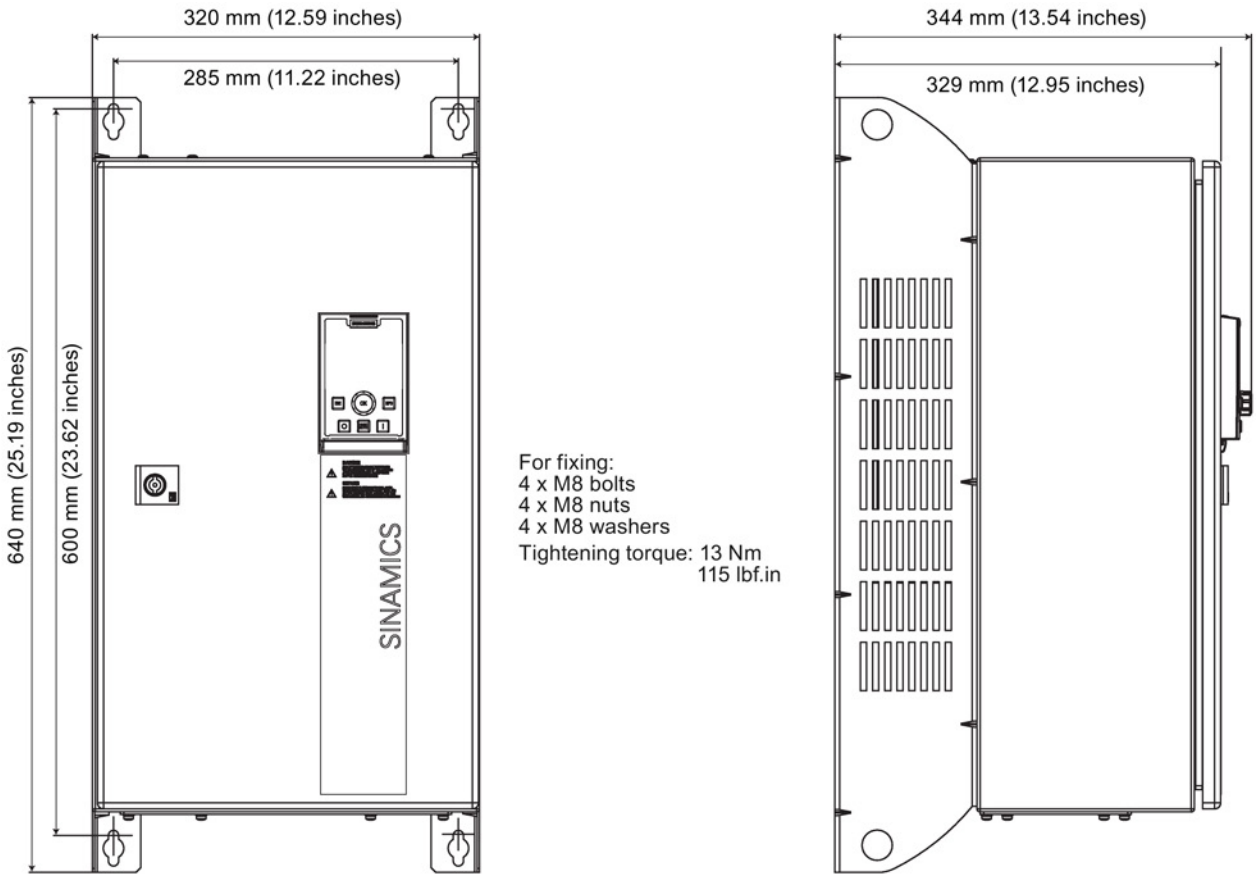

Figure 3-4 Dimensions and drill pattern, PM230 FSD (22.0 - 30.0 kW)

Table 3- 6 Minimum distances for mounting

Minimum distances FSD		Note
side by side	50 mm 1.97 inches	
above	300 mm 11.81 inches	
below	300 mm 11.81 inches	

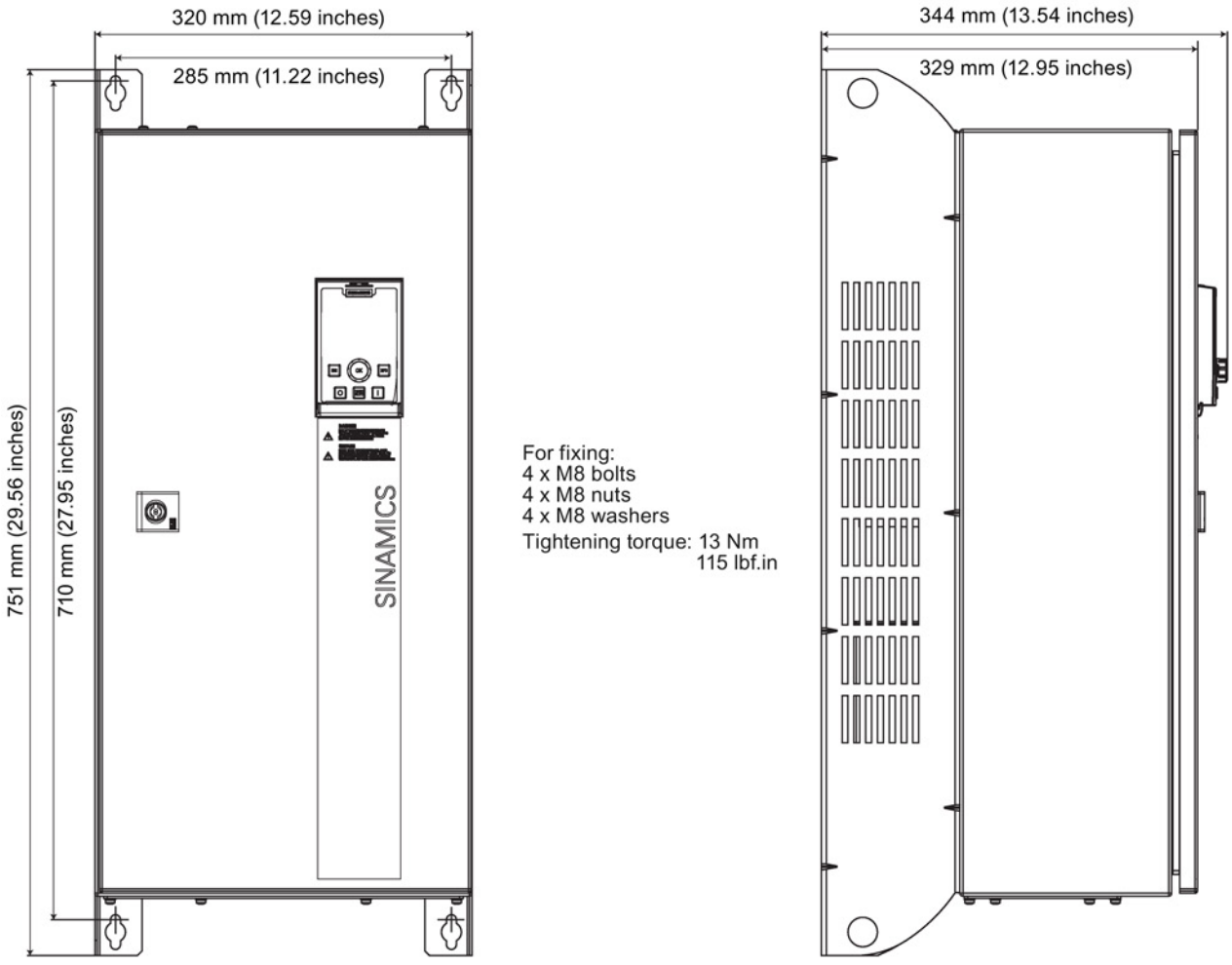

Figure 3-5 Dimensions and drill pattern, PM230 FSE (37.0 - 45.0 kW)

Table 3- 7 Minimum distances for mounting

Minimum distances FSE		Note
side by side	50 mm 1.97 inches	
above	300 mm 11.81 inches	
below	300 mm 11.81 inches	

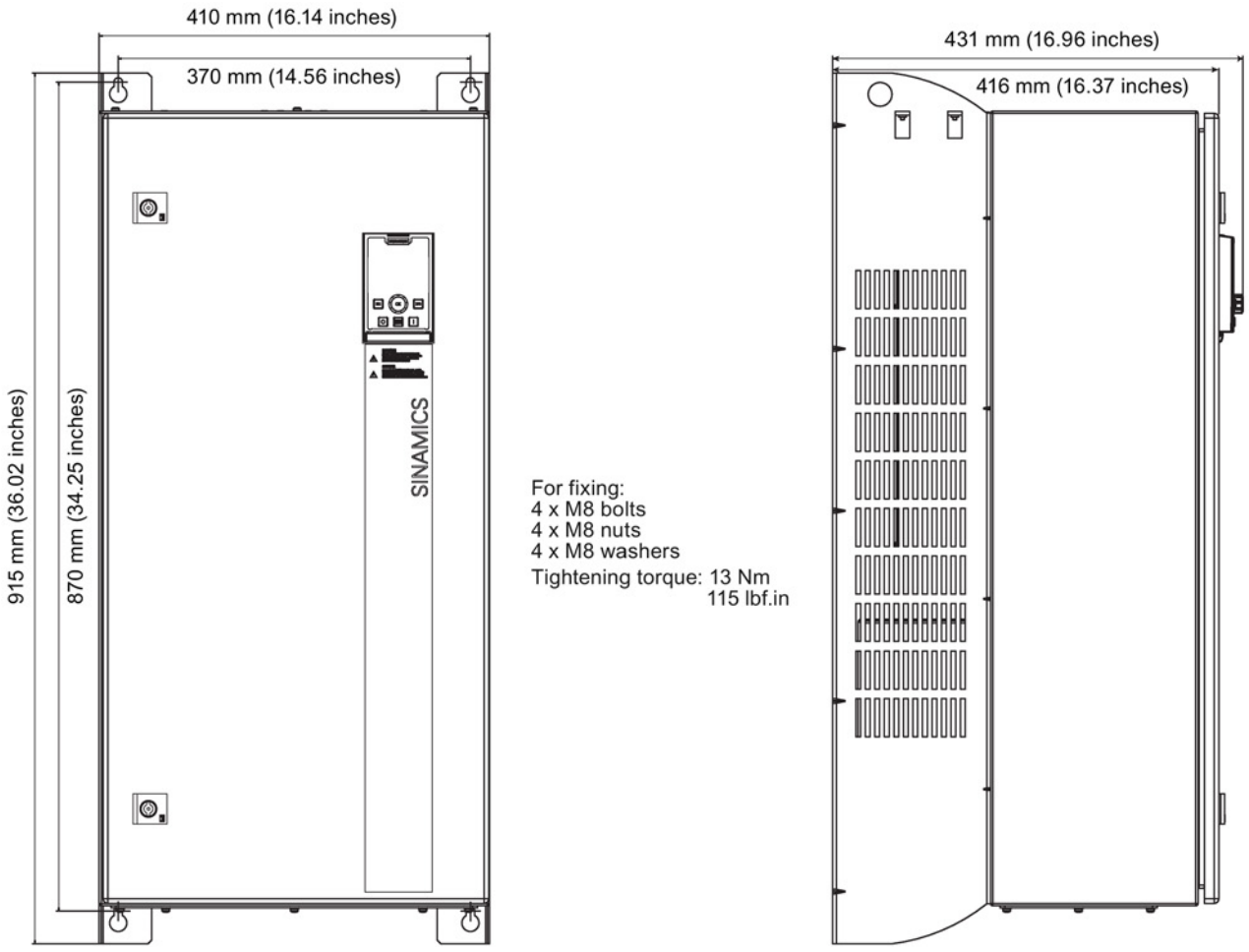

Figure 3-6 Dimensions and drill pattern, PM230 FSF (55.0 - 90.0 kW)

Table 3- 8 Minimum distances for mounting

Minimum distances FSF		Note
side by side	50 mm 1.97 inches	
above	350 mm 13.77 inches	
below	350 mm 13.77 inches	

Table 3- 9 Summary of dimensions and tightening torques

Frame size		Dimensions (height x width x depth)		Fixing methods	Tightening torques
		with Operator Panel	without Operator Panel		
A	mm	460 x 154 x 264	460 x 154 x 249	4 x M4 bolts 4 x M4 nuts 4 x M4 washers	2.5 Nm (22 lbf.in)
	inch	18.11 x 6.06 x 10.39	18.11 x 6.06 x 9.80		
B	mm	540 x 180 x 264	540 x 180 x 249		
	inch	21.25 x 7.09 x 10.39	21.25 x 7.09 x 9.80		
C	mm	620 x 230 x 264	620 X 230 X 249	4 x M5 bolts 4 x M5 nuts 4 x M5 washers	
	inch	24.40 x 9.05 x 10.39	24.40 x 9.05 x 9.80		
D	mm	640 x 320 x 344	640 x 320 x 329	4 x M8 bolts 4 x M8 nuts 4 x M8 washers	13.0 Nm (115 lbf.in)
	inch	25.19 x 12.59 x 13.54	25.19 x 12.59 x 12.95		
E	mm	751 x 320 x 344	751 x 320 x 329		
	inch	29.56 x 12.59 x 13.54	29.56 x 12.59 x 12.95		
F	mm	915 x 410 x 431	915 x 410 x 416		
	inch	36.02 x 16.14 x 16.96	36.02 x 16.14 x 16.37		

3.3 Control Unit installation

Fitting the CU to the PM FSA ... FSF

Note

Memory card

If a memory card is to be used with the Control Unit (CU), then the memory card must be inserted into the CU prior to being fitted on the Power Module (PM). Once the CU is fitted to the PM it is not possible to insert a memory card into the CU.

The Control Unit (CU) is snapped onto the Power Module as shown in the figure below. The CU is fitted in the following sequence:

1. Angle the CU to allow the lower hooks of the CU to fit into the lower recesses of the Power Module (PM).
2. Push the top of the CU towards the PM until it clicks into place.

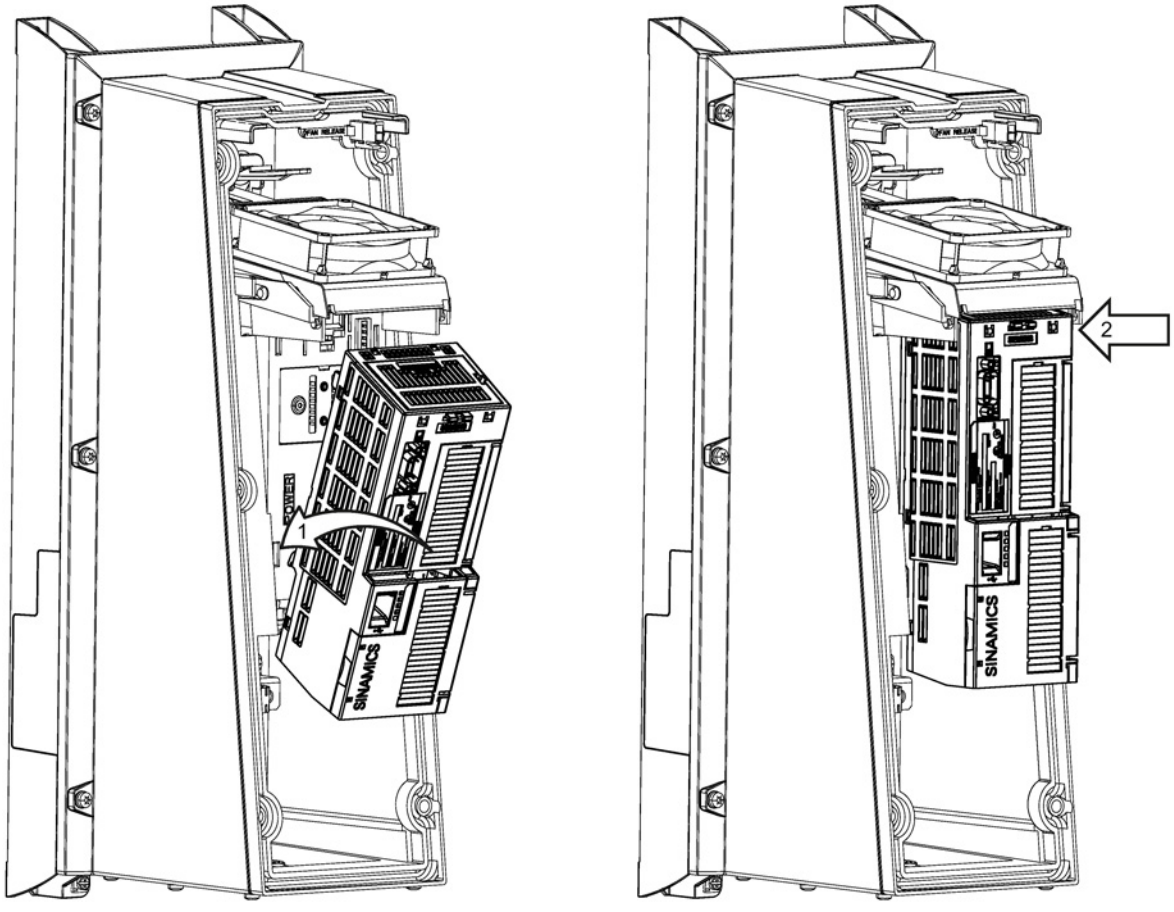

Figure 3-7 Fitting CU to PM

Due to the PM230 having either a cover to remove or a door to be opened to access the actual PM the fitting of the CU and the removal of the CU slightly differs; the complete fitting and removal instructions are given below.

Fitting and removing the CU to the PM230 FSA to FSC

To fit the CU to the PM230 FSA to FSC the following procedure should be performed:

1. Remove the PM top cover by unscrewing the retaining screws of the cover (the screws are self-retaining and cannot be fully removed from the cover).
2. Fit the CU to the PM as previously described above.
3. All wiring of the CU and PM should be completed before proceeding further (refer to the wiring/connection section of this manual).
4. Ensure that the D-type adaptor is fitted to the CU D-type connector. See figures below.
5. Replace the PM cover, ensuring that all seals are intact to maintain the IP55 rating.
6. If an Operator Panel/Blanking Panel is to be fitted, ensure it is fitted once the top cover is replaced.
7. Tighten the retaining screws on the PM top cover (tightening torque 1.5 Nm [13.3 lbf.in]).

Removing the CU

The CU is removed from the PM by using the CU release lever which is located to the right-hand side of the internal fan. The lever is pushed towards the PM to release the CU (see figure below).

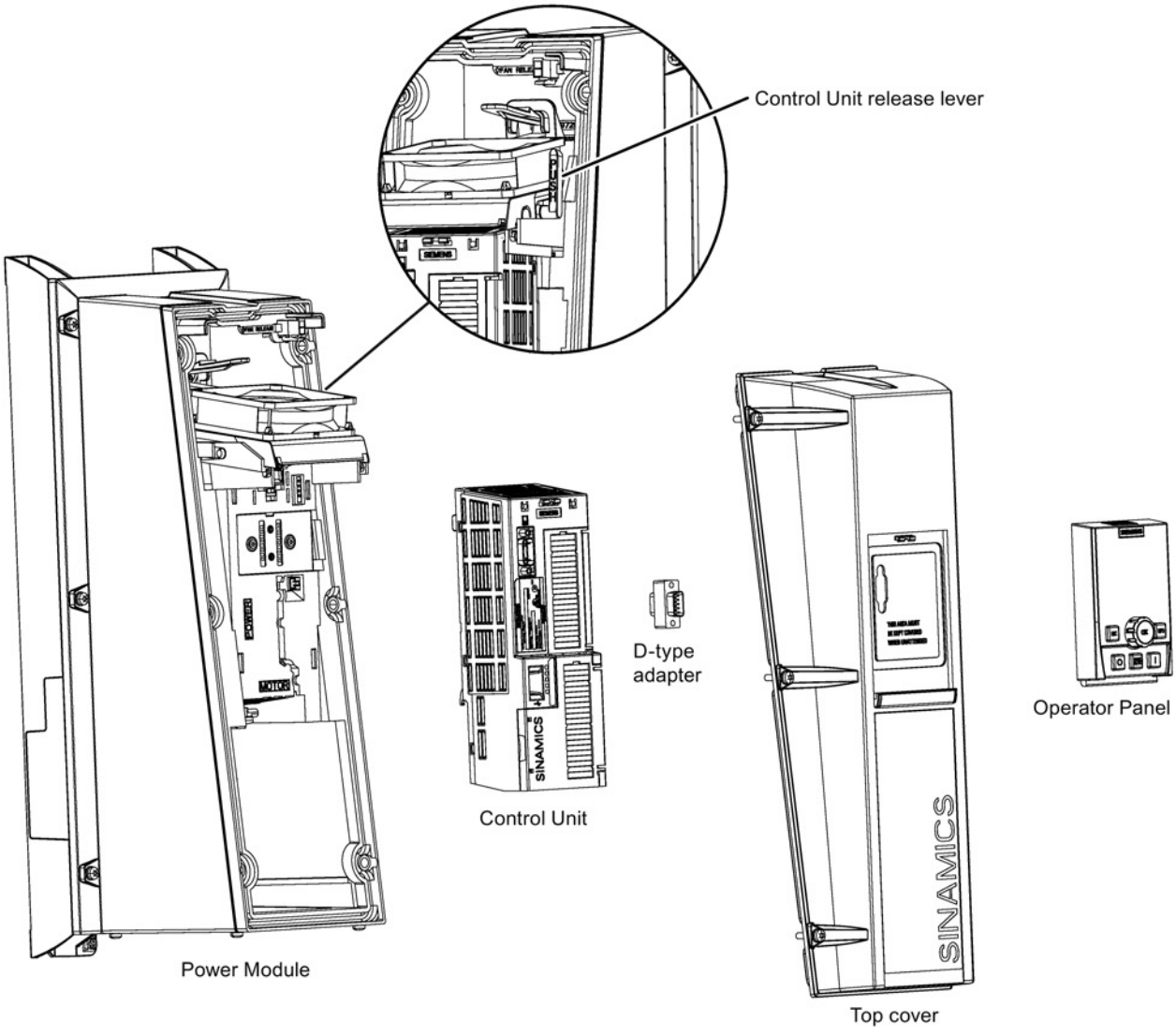

Figure 3-8 Fitting CU to PM230 FSA to FSC

Fitting and removing the CU to the PM230 FSD to FSF

Note

PM230 FSD to FSF door

The actual door of the PM230 (FSD to FSF) has been removed from the illustration to make the sequence of fitting simpler. The door, in reality, should never be removed from the PM230 enclosure.

To fit the CU to the PM230 FSD to FSF the following procedure should be performed:

1. Open the PM door, using the supplied key.
2. Fit the CU to the PM as previously described above.
3. All wiring of the CU and PM should be completed before proceeding further (refer to the wiring/connection section of this manual).
4. If an Operator Panel is to be used, ensure that the D-type adaptor is fitted to the CU D-type connector.
5. If an Operator Panel is to be fitted, ensure it is fitted before the door is closed.
6. Ensure that all seals are intact to maintain the IP55 rating.
7. Close and lock the PM door.

Fitting the D-type adapter retaining bracket

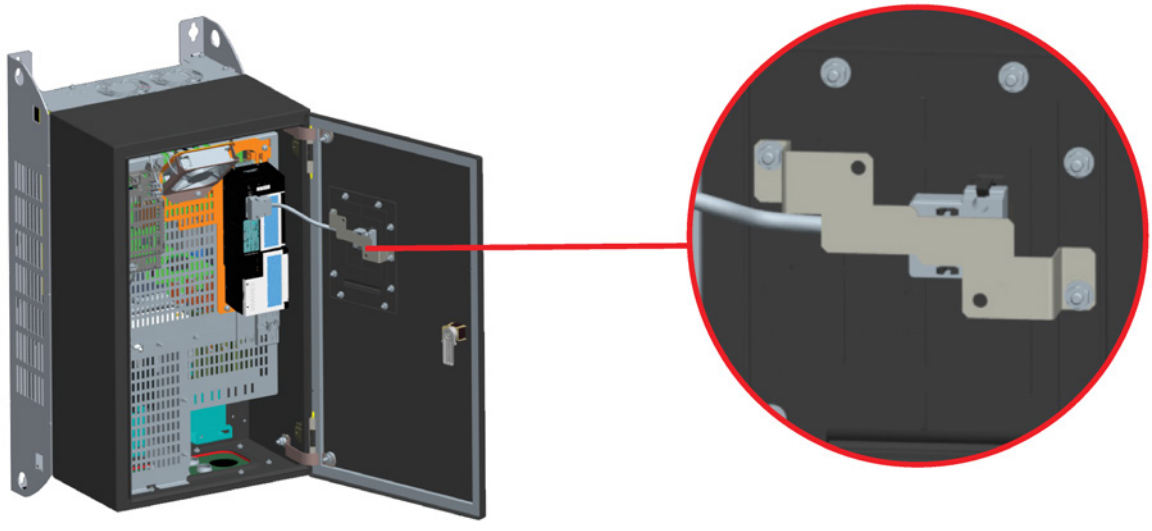

Figure 3-9 Adapter cable bracket FSD to FSF

A special bracket has been designed to ensure that the D-type adapter is fixed securely to the enclosure door. The bracket is fitted as shown in the figure below. The bracket and fixings are supplied with the product.

Removing the CU

The CU is removed from the PM by using the CU release mechanism which is located to the right-hand side of the internal fan and just behind the top-rear of the CU.

The mechanism is pushed-down to release the CU.

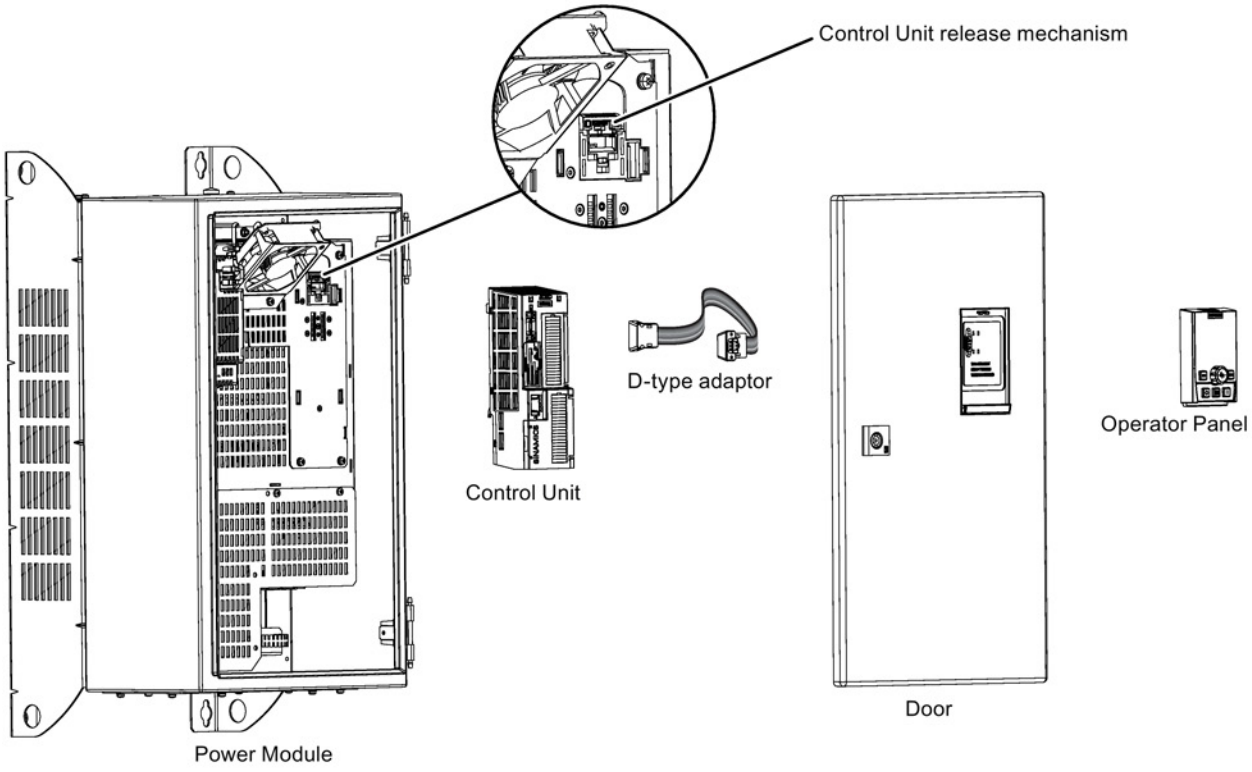

Figure 3-10 Fitting CU to PM230 FSD to FSF

3.4 Fitting the IOP and the blanking plate

Overview

The Inverter has been designed to allow an Intelligent Operator Panel to be fitted to the front of the inverter.

If an IOP is not to be fitted to the Inverter, then the supplied blanking plate must be fitted to maintain the IP55/UL Type 12 rating.

The fitting of the IOP or blanking plate uses the same technique. To fit the IOP or blanking plate to the Inverter the following procedure should be performed:

1. Fit the bottom-edge of the IOP or blanking plate into the panel recess on the front of the Inverter (see diagram below).
2. Push the IOP or blanking plate forward, towards the Inverter until it clicks into place (see diagram below).

Removal

To remove the IOP or blanking plate from the Inverter the following procedure should be performed.

1. Insert a small-bladed screwdriver into the cover recess to push down the IOP/Blanking Plate release mechanism (see figure below).
2. Pull the IOP/Blanking Plate forward, away from the housing.
3. The IOP/Blanking Plate can now be lifted from the bottom recess of the casing.

⚠ CAUTION
Removal of IOP from the Inverter The IOP has no internal, independent power supply; should the IOP be removed from the Inverter then all data store within the IOP's memory will be lost. If the IOP is removed from the Inverter during a process, such as, commissioning or parameter upload or download; that process will be interrupted and the Inverter will be in an unknown state and could result in an unstable system. Ensure that all processes (regarding the IOP) are completed before removing the IOP from the Inverter.

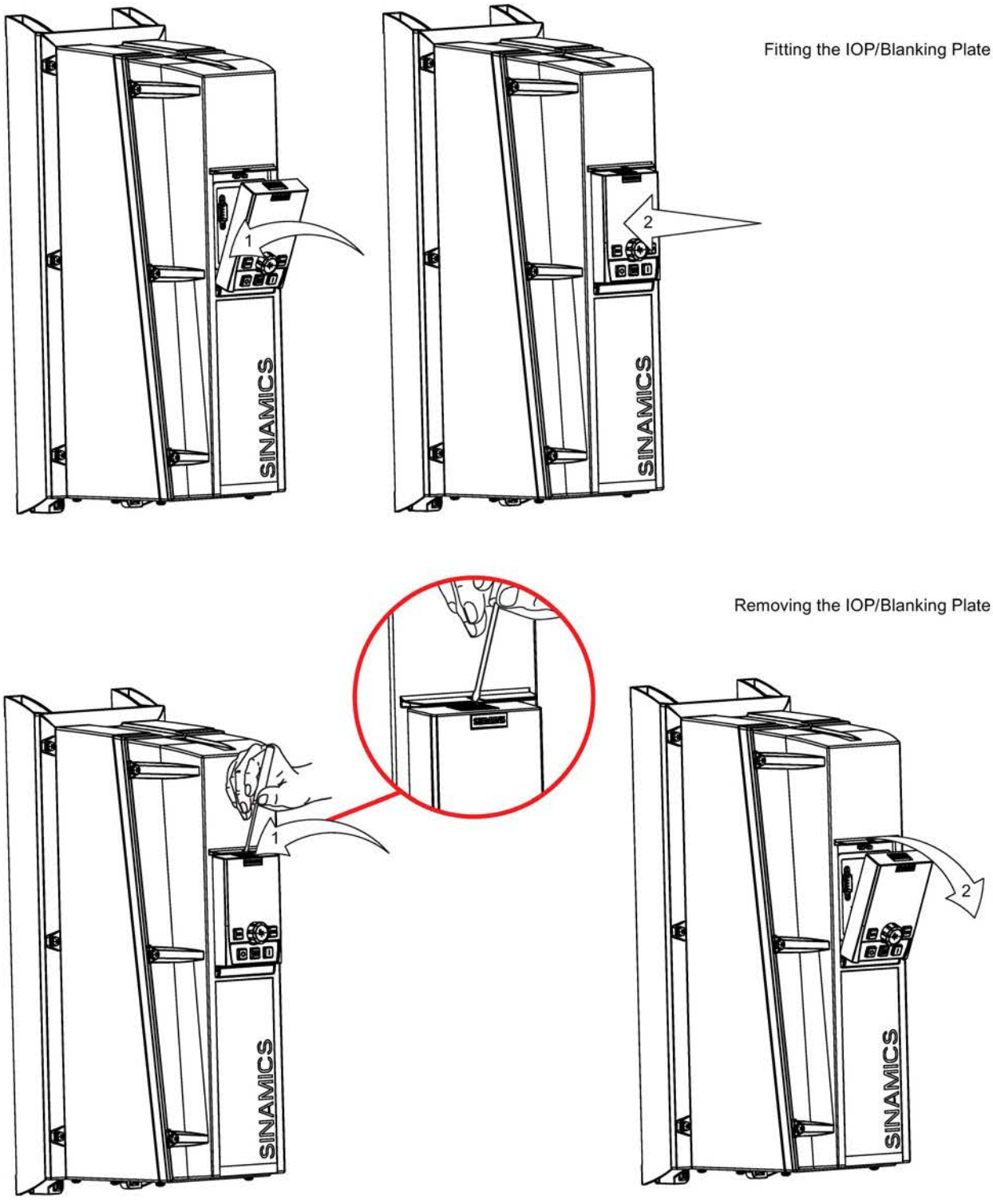

Figure 3-11 Fitting the IOP and blanking plate

Connecting

4

Electrical Installation

⚠ WARNING
Power and motor connections A fixed location, non varying connection is necessary because of a leakage current > 3.5 mA. The inverter must always be grounded. If it is not grounded correctly, extremely dangerous conditions may arise which could prove potentially fatal. Isolate the mains electrical supply before making or changing connections to the unit. The terminals of the Inverter can carry dangerous voltages even if the inverter is inoperative. Wait at least 5 minutes to allow the unit to discharge after switching off the power supply before carrying out any installation work. When connecting the power supply to the inverter, make sure that the terminal case of the motor is closed. When changing from the ON to OFF-state of an operation if an LED or other similar display is not lit or active; this does not indicate that the unit is switched-off or powered-down. Ensure that the inverter is configured for the correct supply voltage – it must not be connected to a higher voltage supply.

⚠ WARNING
Filtered drives can only be used on power systems with grounded starpoint.

4.1 Power distribution systems

Overview of Power Distribution Systems

The power distribution systems described below, as defined in EN 60950 , have been considered in the design of the inverter. In the next figures three phase systems are outlined. The three phase inverter must be connected to L1, L2 and L3. PE must always be connected. The inverter operates with most supply systems.

Table 4- 1 Power distribution systems

TN-S Power System	TN-C-S Power System	TN-C Power System	TT Power System	IT Power System
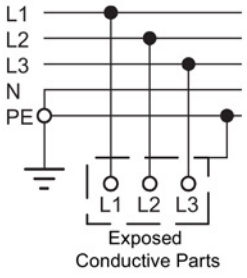	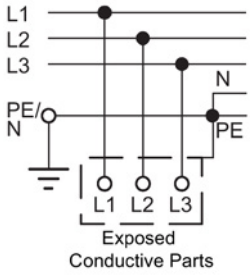	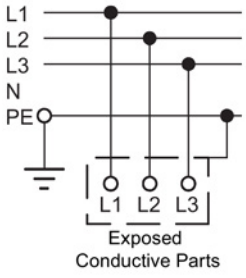	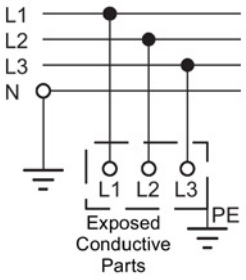	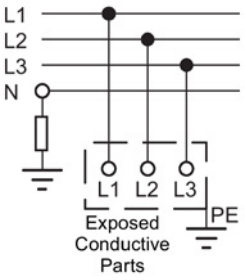
A TN-S power system has separate neutral and protective ground conductors throughout the system.	In a TN-C-S power system, the neutral and protective functions are combined in a single part of the system.	In a TN-C power system, the neutral and protective functions are combined in a single conductor throughout the system.	A TT power system has one point directly grounded, the exposed conductive parts of the installation being connected to a ground, which is electrically independent of the ground of the power system.	An IT power system has no direct connection to ground - instead the exposed parts of the electrical installation are grounded.

Note

To ensure compliance for Class 1 protection in accordance with the EN 61140 directive, the input and output line voltage supplies must be earthed.

4.2 Operation only with grounded (TN) supplies

Operation only with grounded (TN) supplies

The SINAMICS PM230 Power Modules have integrated filters and therefore cannot be used in conjunction with IT or TT supplies.

Operation of the Power Modules without a protective earth is not permitted under any circumstances.

4.3 Motor cable lengths and cross-sections

Permissible cable lengths

Unshielded motor cables can be used. However, in order to comply with EMC Class C1/C2, shielded cables are required with the appropriate EMC-compliant installation.

The EMC classes relevant for the PM230 are explained below.

First environment

An environment that includes domestic premises and establishments that are connected directly to a public low-voltage line supply without the use of an intermediate transformer.

Note

Example: Houses, apartments, commercial premises or offices in residential buildings.

Category C1

Power Drive System (PDS) with a rated voltage less than 1000 V intended for use in the first environment.

Category C2

Power Drive System with a rated voltage less than 1000 V, which is neither a plug-in device nor a movable device, and when used in the first (domestic) environment, is only intended to be installed and commissioned by a professional.

Note

A professional is a person or organization having the skills in installing and/or commissioning Power Drive Systems (PDS), including the associated EMC aspects.

The following cable specifications are to be taken into account in order to comply with the standards specified in the table below.

Table 4- 2 Cable specifications to comply with EMC compatibility (only valid for FSA to FSC)

PM230	Cable type	EMC category	Max. cable length
Filter A	Shielded	C2	25 m (80 ft)
	Shielded	C3	50 m (164 ft)
	Unshielded	None	100 m (330 ft)
Filter B	Shielded	C1 (conducted only)	25 m (80 ft)*
	Shielded	C2	50 m (164 ft)
	Unshielded	None	100 m (330 ft)
* Power Modules with Class B integrated filters, frame sizes A to C, must be fitted with a ferrite ring on the motor cable between the Power Module power terminals and the shielding plates of the Power Module to fulfill EMC category C1 conditions. Only use copper wire Class 1 75 °C (for compliance with UL). Power Modules with integrated Class B filters, frame sizes B and C, in addition to the ferrite ring on the motor cable, must also have a ferrite ring on the line supply cable.			

CAUTION

Control cables must be laid separately from the power cables. The connection must be carried out as shown in the installation section in this manual, to prevent inductive and capacitive interference from influencing the correct system function.

Note

Ensure that the appropriate circuit breakers or fuses with the specified current rating are connected between the power supply and the inverter. The technical specifications contain information about the circuit-breaker and the fuses. See the technical specifications.

EMC cable glands

To ensure compliance with the relevant EMC standards, all communication and I/O cables of the Control Unit must be routed through a gland plate. EMC-compliant cable glands must be used.

CAUTION

Conformity of the radiated emission

For the PM230 Power Modules, frame sizes A to C, an EMC cable gland MUST be used for the motor cables, which is in compliance with the current standards regarding radiated emissions.

Table 4- 3 Cable cross-section

Frame size	Cable cross-section		Tightening torques	
kW	mm²	AWG	Nm	lbf in
FSA				
0.37:	1.0 … 2.5	18 … 14	0.5	4.4
0.55:	1.0 … 2.5	18 … 14	0.5	4.4
0.75:	1.0 … 2.5	18 … 14	0.5	4.4
1.1:	1.0 … 2.5	18 … 14	0.5	4.4
1.5:	1.0 … 2.5	18 … 14	0.5	4.4
2.2:	1.5 … 2.5	16 … 14	0.5	4.4
3:	1.5 … 2.5	16 … 14	0.5	4.4
FSB				
4:	2.5 … 6.0	14 … 10	0.6	5.3
5.5:	4.0 … 6.0	12 … 10	0.6	5.3
7.5:	4.0 … 6.0	12 … 10	0.6	5.3
FSC				
11:	6.0 … 16	10 … 5	1.5	13.3
15:	10 … 16	7 … 5	1.5	13.3
18.5:	10 … 16	7 … 5	1.5	13.3
FSD				
22.0	10 ... 35	5 ... 2	6	53
30.0	10 ... 35	3 ... 2	6	53
FSE				
37.0	25 ... 50	3 ... 2	6	53
45.0	35 ... 50	2 ... 4/0	6	53
FSF				
55.0	70 ... 120	2/0 ... 4/0	13	115
75.0	95 ... 120	3/0 ... 4/0	13	115
90.0	95 ... 120	3/0 ... 4/0	13	115

⚠ CAUTION

Cable cross-section for grounding

The material of the protective grounding conductor must be the same as the material of the power cable. If this is not the case, the specific resistance of the protective grounding conductor must not be higher than the specific resistance of the power cables. The relevant diameter of the power cables is the diameter of the line supply cable, and not the diameter of the motor cable.

For power cables up to 10 mm² (16 mm² Al), as a minimum, the ground cable must have the cross-section of the power cable.

For power cables larger than 10 mm² (Cu) or 16 mm² (Al) then the ground cable must have a minimum cross-section of 10 mm² (Cu) or 16 mm² (Al) (larger cross-sections are not required).

For power cables with a diameter of more than 35 mm^2 the protective grounding conductor must have at least half of the size of the cross-section of the power cable.

4.4 Access to power and motor terminals

Accessing the power and motor terminals

⚠ WARNING

Do not remove Inverter cover or open Inverter door during operation

This equipment contains dangerous voltages and controls potentially dangerous rotating mechanical parts. Non-compliance with the warnings or failure to follow the instructions contained in this manual can result in loss of life, severe personal injury or serious damage to property.

Protection in case of direct contact by means of SELV / PELV is only permissible in areas with equipotential bonding and in dry indoor rooms. If these conditions are not fulfilled, other protective measures against electric shock must be applied e.g. protective insulation.

Only suitably qualified personnel should work on this equipment, and only after becoming familiar with all safety notices, installation, operation and maintenance procedures contained in this manual. The successful and safe operation of this equipment is dependent upon its proper handling, installation, operation and maintenance.

The power supply, DC and motor terminals and thermistor cables can carry dangerous voltages even if the inverter is inoperative. The Control Unit can be powered from an external 230 V supply, if this is the case, then the external power supply must also be disconnected. Wait at least five minutes to allow the unit to discharge after switching off the line supply before carrying out any installation work.

It is strictly prohibited for any mains disconnection to be performed on the motor-side of the system; any disconnection of the mains must be performed on the mains-side of the Inverter.

When connecting the line supply to the Inverter, make sure that the terminal case of the motor is closed.

Frame sizes A ... C

The PM230 FSA to FSC have no terminal covers, but they do have detachable power terminals. Both power terminals can be removed to facilitate easier wiring of the Power Module. The PM230 FSA ... FSC front cover must be removed to gain access to the terminals.

The location and markings are shown in the figure below:

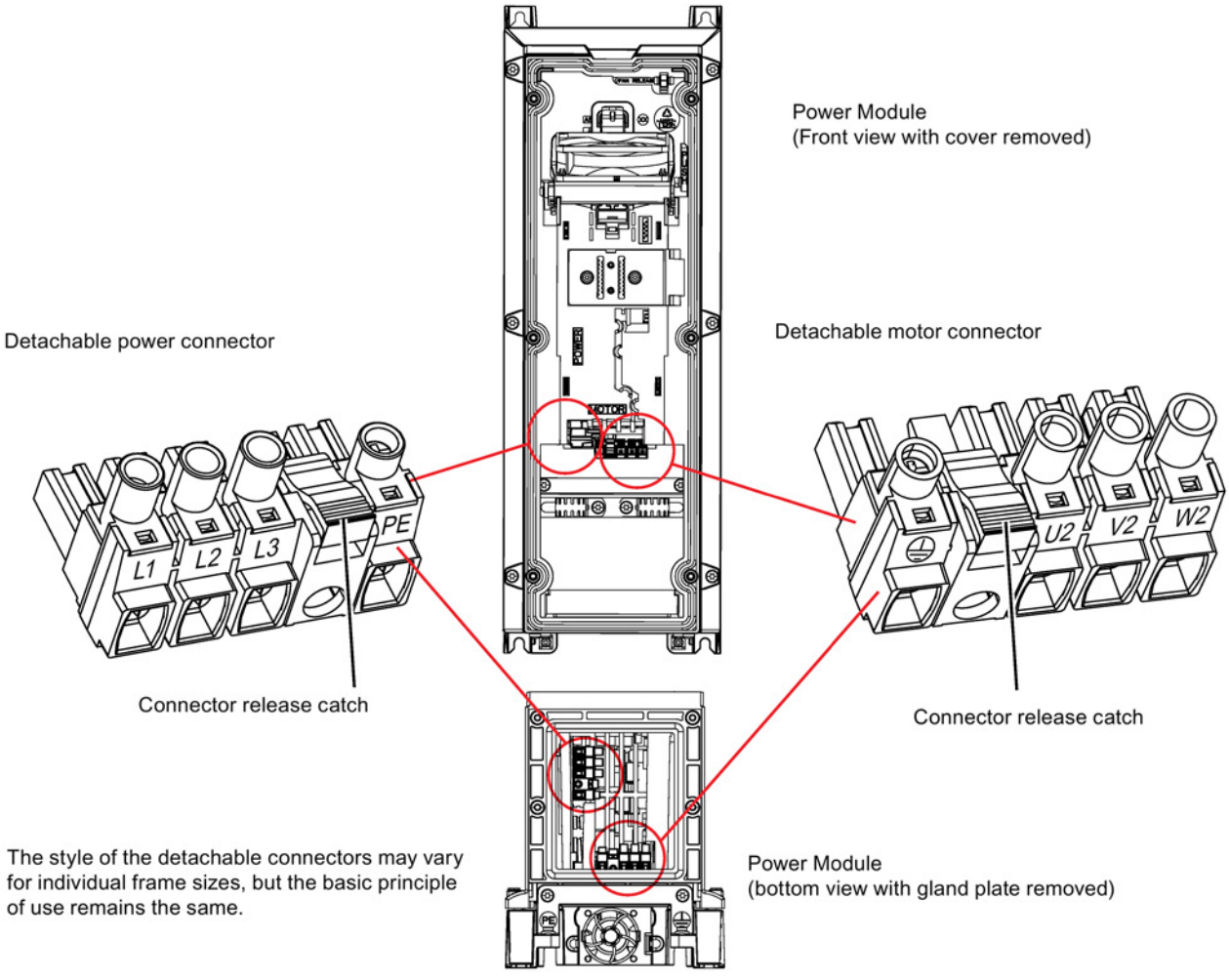

Figure 4-1 SINAMICS PM230 FSA to FSC power connections

Frame sizes D ... F

Frame size D to F of the PM230 have a terminal cover (in the form of a metal grill). The door of the Inverter must be fully opened to allow access to the terminal cover and the terminals. The terminal cover must be removed to gain full access to the power terminals. The location and fixings of the power terminals cover is shown in the figure below:

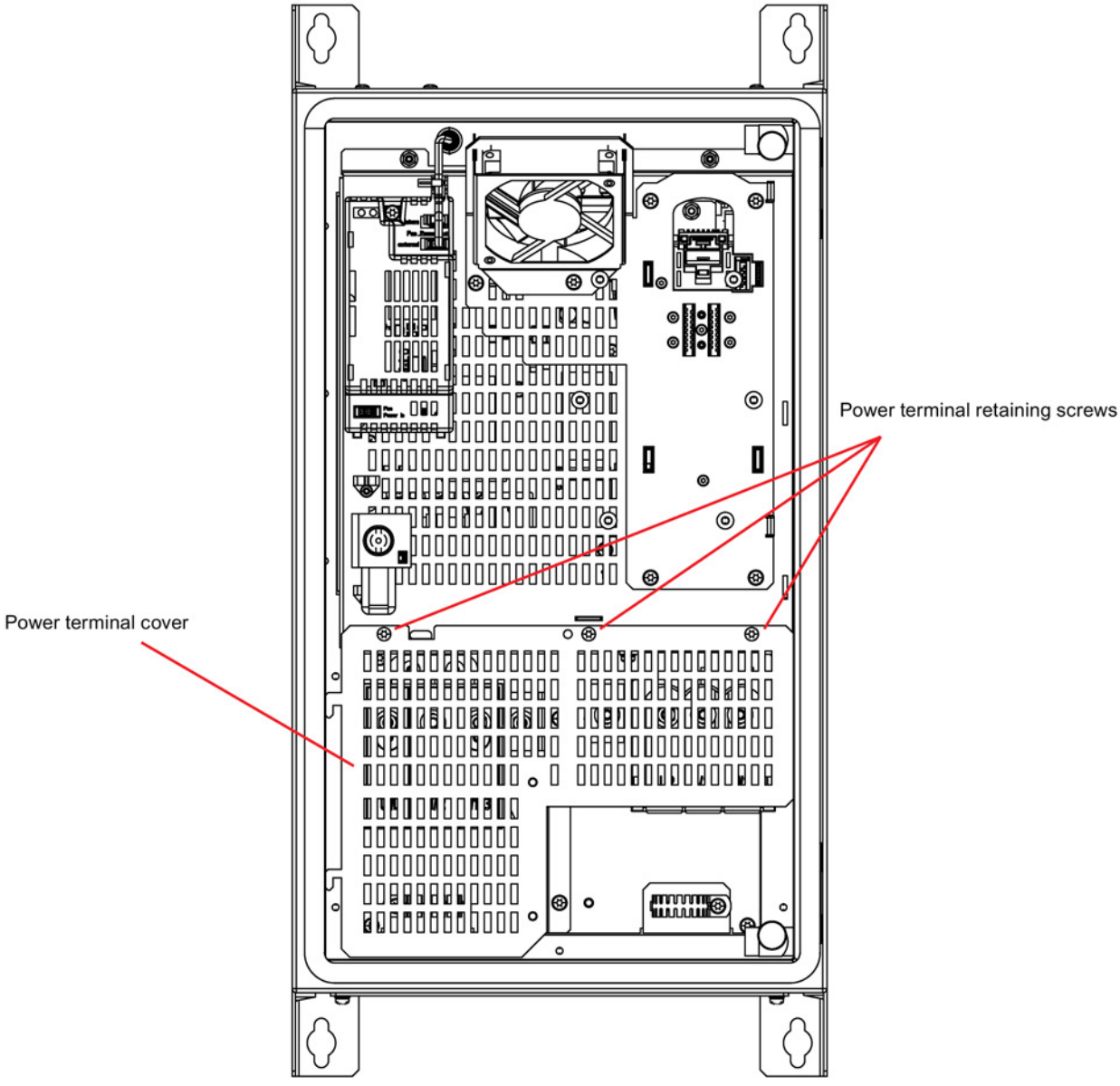

Figure 4-2 SINAMICS PM230 FSD to FSF Terminal Cover

4.5 Cable preparation

Preparation information

The table and the diagram below are provided to ensure that the cables for use with the PM power and motor terminals are prepared correctly.

No screening dimensions are given for the input power cables as these are not normally screened cables.

Diagram	Cable type	Dimensions			
		A	B	C	D
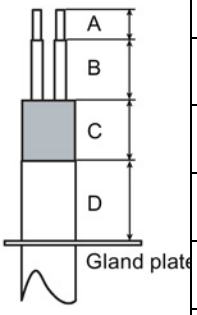	FSA power cable	10 mm 0.39 inches	60 mm 2.36 inches	-	90 mm 3.54 inches
	FSA motor cable	10 mm 0.39 inches	60 mm 2.36 inches	10 mm 0.39 inches	60 mm 2.36 inches
	FSB power cable	10 mm 0.39 inches	60 mm 2.36 inches	-	50 mm 1.96 inches
	FSB motor cable	10 mm 0.39 inches	50 mm 1.96 inches	10 mm 0.39 inches	40 mm 1.57 inches
	FSC power cable	10 mm 0.39 inches	50 mm 1.96 inches	-	70 mm 2.75 inches
	FSC motor cable	10 mm 0.39 inches	50 mm 1.96 inches	10 mm 0.39 inches	40 mm 1.57 inches

4.6 Wiring Sequence

Overview

Due to the nature of the Power Module enclosure, the following guidelines are given to provide a more effective and efficient sequence to ensure that the wiring of the Power Module is completed correctly.

Prerequisite actions

⚠ DANGER
Ensure the Power Module has no power connect prior to installing cables and wiring It is essential that during the installation phase of the cables and wiring of the Power Module that no power, in any form, is connected to the Power Module or the attached Control Unit. If power has been applied to the Power Module or the Control Unit this **MUST** be disconnected. Once the power has been removed, the user should wait for at least 5 minutes before proceeding with the electrical installation of the Power Module.

Before the wiring of the Power Module can be performed, the following actions should be taken:

1. The Power Module must be mounted correctly as previously describe in this manual.
2. The Power Module cover has been removed.
3. The Control Unit has been fitted correctly to the Power Module.
4. The Installer has reviewed the following instructions to ensure that all the necessary tools, to complete the wiring sequence, are available.
5. The Installer must be fully conversant with all necessary local and national safety regulations regarding electrical installation of industrial products.

Wiring sequence

To perform the correct wiring sequence, the following actions must be taken:

Step 1

Prepare the cables according to the dimensions given in the previous section of this manual.

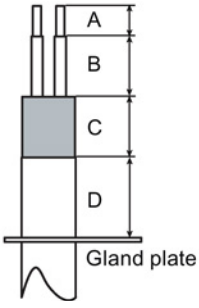

Step 2

1. Remove the retaining screws from the gland plate.
2. Remove the gland plate.

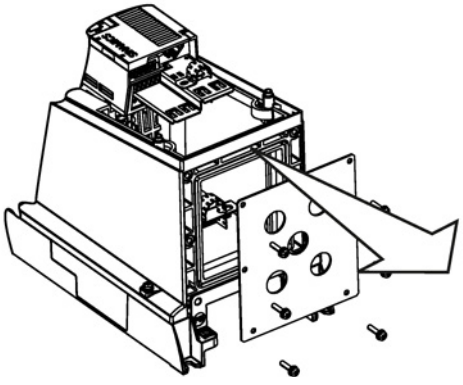

Step 3

1. Fit the cable glands to the cables.
2. Ensure that the cable glands are unscrewed and the cables can move freely through the cable glands.

An EMC cable gland is required to be fitted to the motor power cable and the Control Unit cable to ensure EMC compliance.

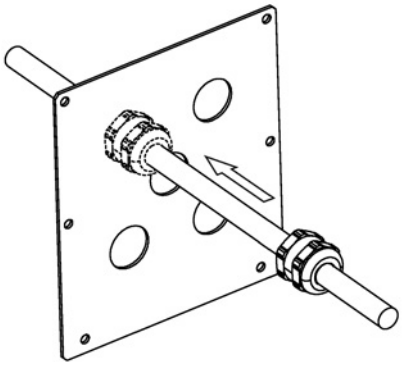

Step 4

1. Fit a ferrite core to the motor cable, as shown in the diagram on the right (for Class B filtered variants only).
2. Connect the power and motor cables to the Power Module terminals.
3. Ensure the cables are correctly secured by the screening clamps.

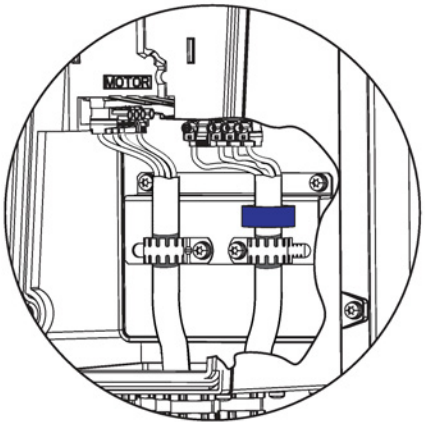

Step 5

1. Push the gland plate against the Power Module base.
2. Ensure that the cables are pulled through the cable glands to remove excess cable from inside the Power Module housing.
3. Screw the gland plate securely into place with a maximum torque of 2.0 Nm (17.7 lbf.in)
4. Ensure that the seals are correctly in place to maintain the IP55 rating.
5. Tighten the cable glands to a maximum torque of 2.5 Nm (22.12 lbf.in).
6. Fit grommets to the gland plate holes that have no cables.

The grommets are provided in the Accessory Bag provided with the product.

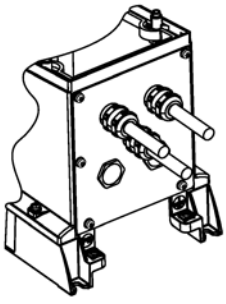

4.7 Power and motor connections

Power and motor terminal layout

The figure below show the layout of the power and motor terminals of the Power Module. The figure also includes the tightening torques for the terminals.

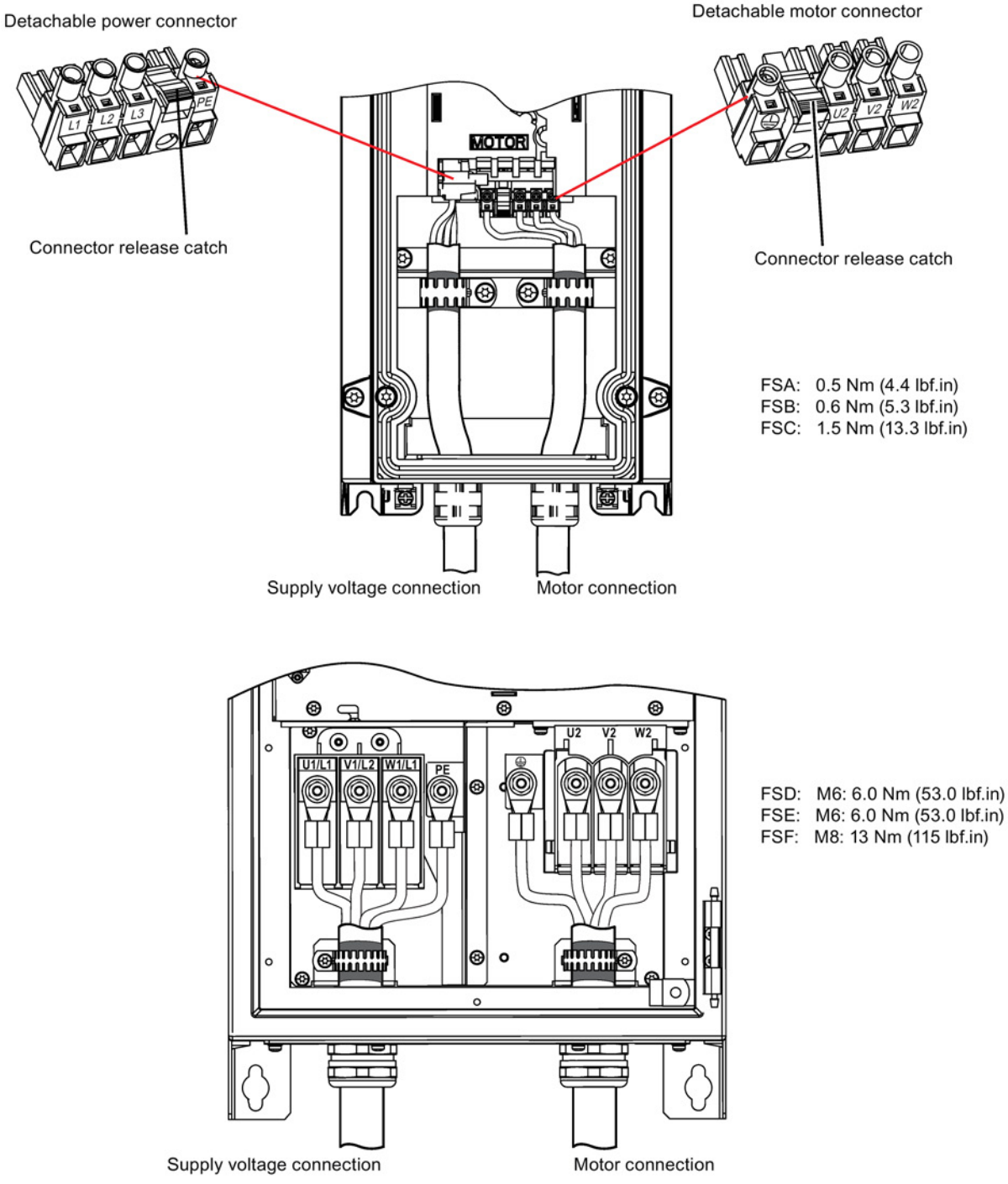

Figure 4-3 Power and motor terminal layout for FSA ... FSF

4.8 Gland plate installation

Overview

The Inverter enclosure has a gland plate fitted to the bottom of the unit with pre-drilled guide holes to allow the power and control cables to be taken from the unit whilst maintaining the EMC requirements and IP55/UL Type 12 rating.

In the figures below the gland plate and it fittings are described.

If a guide hole is not used, then a grommet must be used to maintain the seal of the gland plate.

When replacing the gland plate, it is important to ensure that the seal at the bottom of the unit is correctly fitted and the correct tightening torques are used to ensure the IP55 rating of the Inverter.

EMC cable glands

To ensure compliance with the necessary EMC standards, it is recommended that all communications and I/O cables from the Control Unit are fitted through the gland plate using EMC compliant cable glands.

⚠ CAUTION
Radiated emission compliance The PM230 Frame Size A to F inclusive, MUST use an EMC cable gland on the motor cable to comply with radiated emissions standards.

An example of an EMC cable gland is given in the figure below. In the example below the cable gland also provides protection to the IP68 standard when correctly fitted to the gland plate.

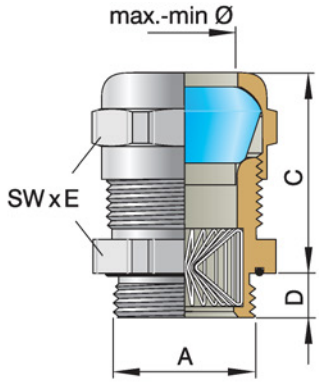

Brass-nickel plated EMC cable gland with metric thread as per EN50262. IP68 protection with up to 15 bar pressure.

Connection thread/length A	D (mm)	Clamping range without inlet max/min Ø (mm)	Clamping range max/min Ø (mm)	C (mm)	Spanner width SW x E (mm)	Order No.
M16 x 1.5	6.0	11 - 7	9 - 5	29	20 x 22.2	bg216mstri
M20 x 1.5	6.5	14 - 9	12 - 7	29	24 x 26.5	bg220mstri
M25 x 1.5	7.5	20 - 13	16 - 10	29	30 x 33	bg255mstri
M32 x 1.5	8.0	25 - 20	20 - 13	32	36 x 39.5	bg232mstri

Figure 4-4 Example of a Blueglobe EMC cable gland

Gland plate hole dimensions

In the table below the dimensions of the gland plate holes for all frame sizes of the PM230 are given. The cable glands are not supplied with the product but grommets are supplied with the product.

The size of the actual cable glands should be dimensioned to fit snugly into the appropriate cable gland hole to ensure the IP55 rating of the Inverter.

Table 4- 4 Gland plate dimensions information

Frame size	Power range (LO)	Power cable gland diameter	Control cable gland diameter	Cable gland manufacturers
A	0.37 ... 3.0 kW (0.5 ... 4.0 hp)	20.5 mm (0.80 inches)	20.5 mm (0.80 inches)	Schlemmer / Pflitsch
B	4.0 ... 7.5 kW (5.0 ... 10.0 hp)	25.5 mm (1.0 inches)	20.5 mm (0.80 inches)	Schlemmer / Pflitsch
C	11.0 ... 18.5 kW (14.0 ... 24.0 hp)	32.5 mm (1.27 inches)	20.5 mm (0.80 inches)	Schlemmer / Pflitsch
D	22.0 ... 30.0 kW (29.0 ... 40.0 hp)	40.5 mm (1.59 inches)	20.5 mm (0.80 inches)	Schlemmer / Pflitsch / Hummel
E	37.0 ... 45.0 kW (50.0 ... 60.0 hp)	50.5 mm (1.98 inches)	20.5 mm (0.80 inches)	Schlemmer / Pflitsch / Hummel
F	55.0 ... 90.0 kW (73.0 ... 120.0 hp)	63.5 mm (2.5 inches)	20.5 mm (0.80 inches)	Schlemmer / Pflitsch / Hummel / Lappkabel

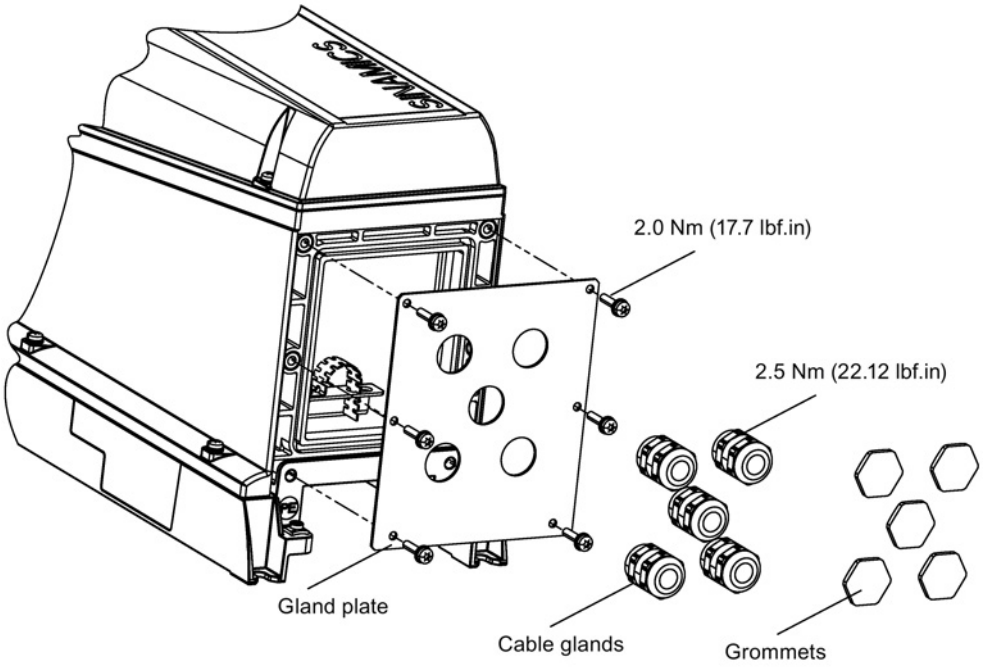

Figure 4-5 PM230 gland plates FSA to FSC

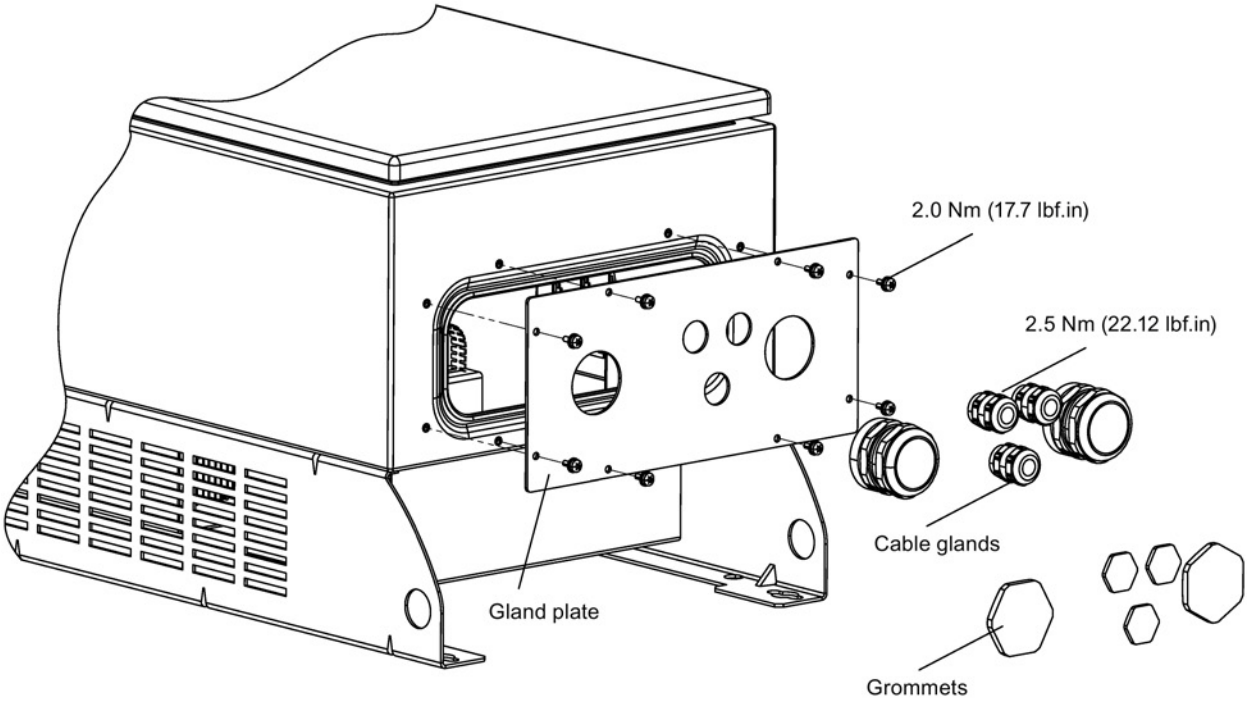

Figure 4-6 PM230 gland plates FSD to FSF

4.9 EMC guidelines

4.9.1 Avoiding electromagnetic interference

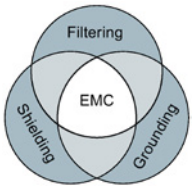

Only the concurrent use of filtering, grounding and shielding ensure an installation in accordance with the EMC requirements.

The next sections cover all of the most important rules for the installation of inverter and drive systems.

4.9.2 Connections and interference suppression

All connections should be made so that they are permanent. Screwed connections on painted or anodized metal components must be made either by means of special contact washers, which penetrate the isolating surface and establish a metallically conductive contact, or by removing the isolating surface on the contact points.

Contactor coils, relays, solenoid valves, and motor holding brakes must have interference suppressors to reduce high-frequency radiation when the contacts are opened (RC elements or varistors for AC currentoperated coils, and freewheeling diodes for DC current-operated coils). The interference suppressors must be connected directly on each coil.

4.9.3 Cabling

Cables

- All cable lengths must be minimized (excessive cable lengths must be avoided).
- Signal and data cables, as well as their associated equipotential bonding cables, must always be routed in parallel and with as short a distance as possible.
- Spare wires for signal and data cables must be grounded at both ends to create an additional shielding effect.
- All power cables (line supply cables, as well as motor cables) must be routed seperately from signal and data cables. The minimum distance should be approximately 25 cm.
- The power cable between inverter and motor must be shielded. A symmetrical, 3-wire, three-phase cable should be used here. Shielded cables with symmetrical three-phase conductors (L1, L2, and L3) and an integrated, 3-wire, and symmetrically arranged PE conductor are ideal for this purpose.
- The shielded power cable to the motor must be routed separately from the cables to the motor temperature sensors (PTC/KTY), since the latter two are treated as signal cables.

- Signal and data cables must be shielded to minimize coupled-in interference with respect to capacitive, inductive, and radiative coupling.
- Particularly sensitive signal cables, such as setpoint and actual value cables must be routed with optimum shield bonding at both ends and without any interruptions of the shield.

Cable shields

- Shielded cables must have finely stranded braided shields. Foil shields are not suitable since they are much less effective.
- Shields must be connected to the grounded housings at both ends with excellent electrical conductivity and a large contact area. Only when this method is used coupled-in interference with respect to capacitive, inductive, and radiative coupling can be minimized.
- Bonding connections for the cable shields should be established, where ever possible, directly behind the cable entry into the inverter. For signal and data cables the shield bonding options provided in the cabinet units should be used.
- Cable shields should not be interrupted, wherever possible, by intermediate terminals.
- In the case of both, the power cables and the signal and data cables, the cable shields should be connected by means of suitable EMC shield clips or via electrically conductive PG glands. These must connect the shields to the shield bonding options for cables and the unit housing respectively with excellent electrical conductivity and a large contact area.
- As plug connectors for shielded data cables (e. g. PROFIBUS cables) only metallic or metallized connector housings should be used.

4.9.4 Equipotential bonding

Equipotential bonding within the drive system has to be established by connecting all electrical and mechanical drive components (transformer, motor and driven machine) to the grounding system. These connections are established by means of standard heavy-power PE cables, which do not need to have any special high-frequency properties. In addition to these connections, the inverter (as the source of the high-frequency interference) and all other components in each drive system (motor and driven machine) must be interconnected with respect to the high-frequency point of view. For this purpose cables with good high-frequency properties must be used.

Grounding and high-frequency equipotential bonding measures

The following figure illustrates all grounding and high-frequency equipotential bonding measures using an example with a SINAMICS G120P.

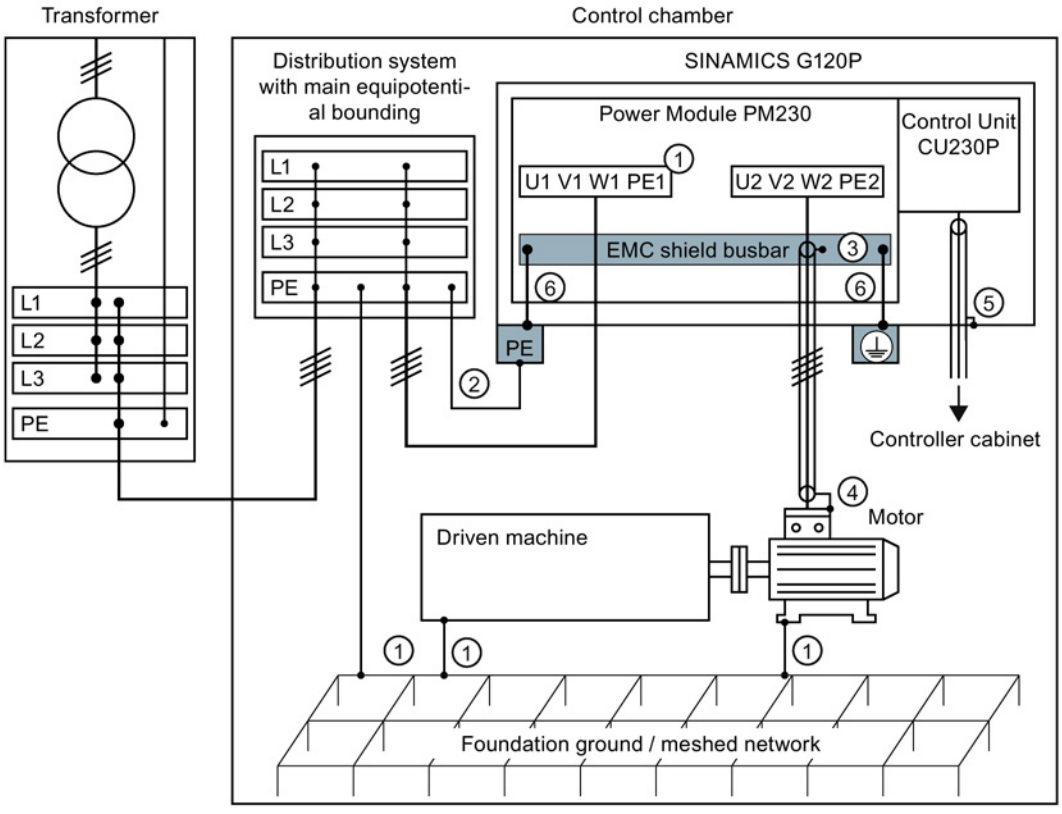

① Conventional grounding system without special high-frequency properties
② High-frequency equipotential bonding
③ Connect shield with a large contact area
④ ⑤ Connect shield via electrically conductive PG gland
⑥ Internal connection with high-frequency properties

Figure 4-7 Grounding and high-frequency equipotential bonding measures in the drive system and in the plant

The ground connections ① represent the conventional grounding system for the drive components. They are made with standard, heavy-power PE conductors without special high-frequency properties and ensure low frequency equipotential bonding as well as protection against injury.

The line supply cable of the inverter can be unshielded. The inverter has to be grounded by this cable.

The shielded motor cable provides high-frequency equipotential bonding between the inverter and the motor terminal box. The shield of the motor cable has to be connected to the EMC shield busbar ③ in the inverter by the integrated shield clips with a large contact area. On the motor side the shield has to be connected to the terminal box via an electrically conductive PG gland ④.

The shield of the signal cable between the Control Unit and an external controller has to be connected to the gland plate via an electrically conductive PG gland ⑤ and on the other end to the shield bonding options of the controller cabinet directly behind the cable entry.

The connection ② provide solid bonding for high-frequency currents between the metal housing of the inverter and the PE busbar. This connection should be made with short, finely stranded, braided copper wires with a large cross-section (≥ 95 mm²).

Additional measures

Finely stranded, braided copper cables have to be routed in parallel with the cable shields in the following cases:

- Old installations with already existing unscreened cables
- Cables with poor high-frequency properties
- Installations with bad grounding systems

The connections in the figure below provide a solid, high-frequency bonding between the motor housing, the motor terminal box, the driven machine and the EMC busbar of the inverter.

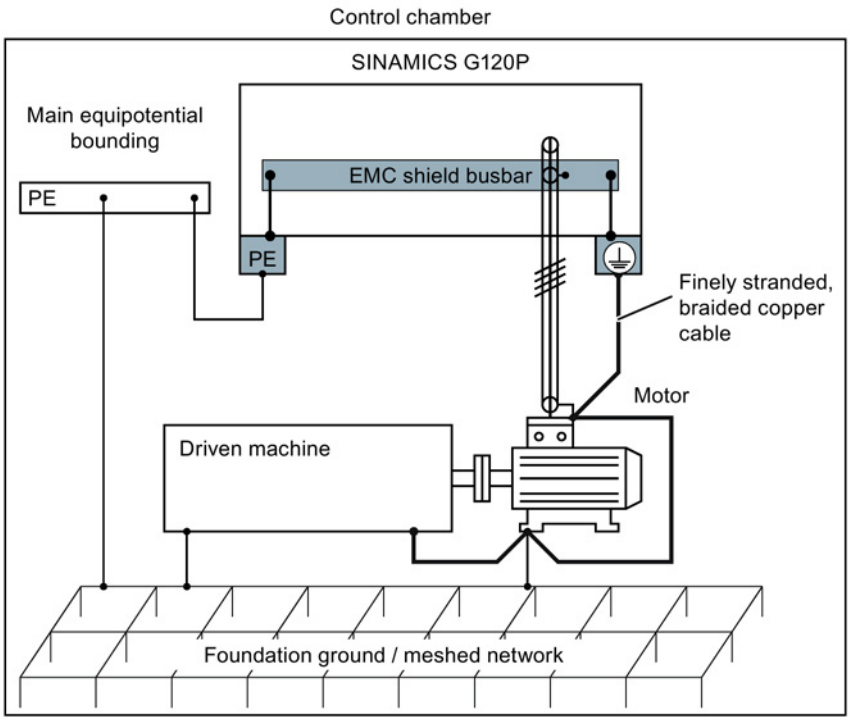

Figure 4-8 Additional high-frequency bonding of the drive system

4.9.5 Inverter shielding in detail, FSA to FSC

The figure below shows the necessary shielding of the Power Module.

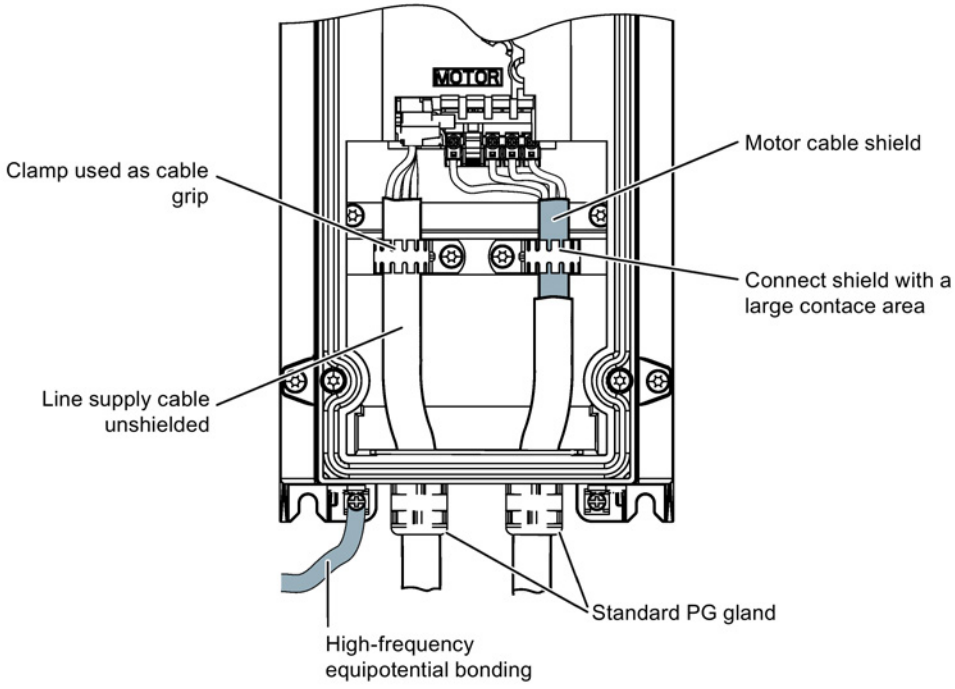

Figure 4-9 Power Module shielding, FSA … FSC

If a terminal wiring of the Control Unit is required, a shielded cable has to be used. The cable shield has to be connected to the gland plate via an electrically conductive PG gland.

This cable has to be fed through the left-hand hole of the gland plate, especially on frame size C filter class B Power Modules.

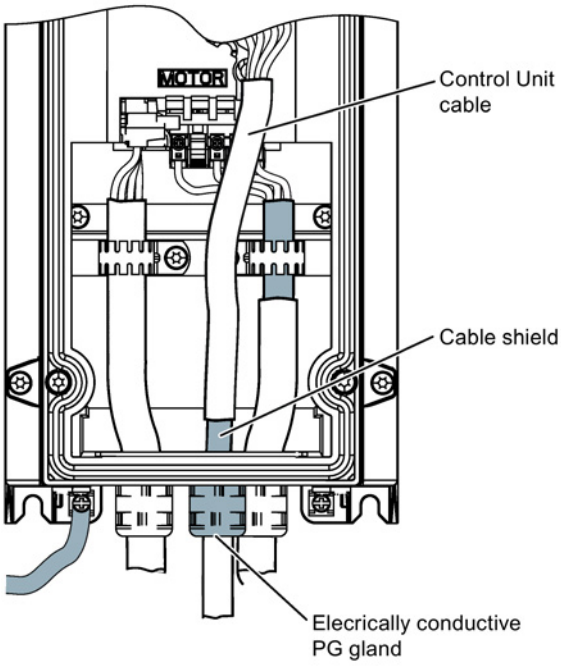

Figure 4-10 Control Unit cable shielding, FSA … FSC

Fitting ferrite rings to the motor and mains supply cables

Motor cable blue ferrite ring

It is necessary to fit the blue ferrite ring to the motor power cable on the PM230 frame sizes A to C (0.37 kW ... 15.0 kW) with an integrated B class filters to ensure it fulfills the EMI C1 standard for conducted emissions.

The blue ferrite ring must be fitted between the motor power cable terminals and the screening plate of the power module.

The ferrite rings should not be used on cable lengths greater than 25 m (80 ft).

The ferrite rings required for PM230 FSA to FSC with integrated Class B filters are supplied with the product.

Mains supply cable ferrite rings

It is necessary to fit the gray ferrite rings to the mains supply cable of the PM230 frame size B (4.0 kW ... 7.5 kW) and frame size C (11.00 kW ... 15.0 kW) with an integrated B class filter to ensure it fulfills the EMI standard for radiated emissions.

The gray ferrite rings must be fitted between the terminals and the screening plate on the mains supply cable.

The gray ferrite rings are supplied with the product.

The correct fitting of the ferrite rings is shown in the figure below.

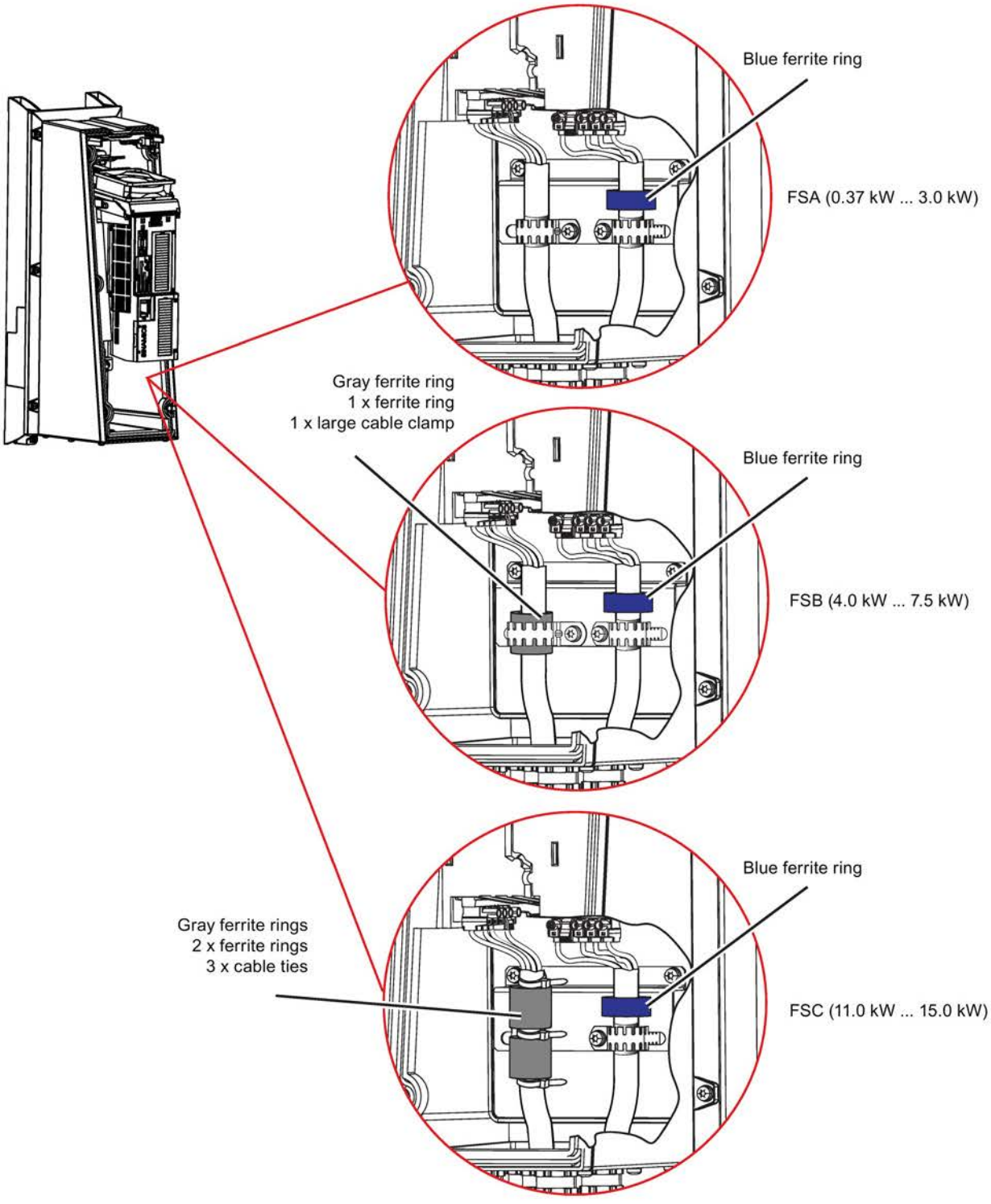

Figure 4-11 Fitting ferrite rings to motor and mains supply cables

Service and maintenance 5

5.1 Maintenance

5.1.1 Maintenance

The purpose of maintenance is to preserve the specified condition of the Power Module. Dirt and contamination must be removed regularly and parts subject to wear replaced. The Power Module comprises mostly electronic components. Apart from the fan(s), the unit, therefore, contains hardly any components that are subject to wear or that require maintenance or servicing.

The following points must generally be observed.

5.1.2 Cleaning

Ventilation

When installing the devices, make sure that the ventilation slots are not obstructed. The fan must be checked to make sure that it is functioning correctly.

Cable and screw terminals

Cable and screw terminals must be checked regularly to ensure that they are secure in position, and if necessary, retightened. Cabling must be checked for defects. Defective parts must be replaced immediately.

Note

The actual intervals at which maintenance procedures are to be performed depend on the installation conditions and the operating conditions.

Siemens offers its customers support in the form of a service contract. For further details, contact your regional office or sales office.

5.2 Replacing components

5.2.1 Replacing the cooling fan

The service life of the cooling fan

The average service life of the cooling fans is 40,000 hours. In practice, however, the service life may deviate from this value. Especially a dusty environment can occlude the fan.

The fan must be replaced in good time to ensure that the inverter is available.

Replacing the external cooling fan FSA … FSC

The PM230 Power Modules have two sets of cooling fans, one fan is internal and the other is external. The external cooling fan is mounted at the rear of the Power Module.

The external cooling fans on the PM230 FSA to FSC are a complete fan modules and do not require any tools to remove and replace the fans. The power connection on the fan unit is an integral part of the fan module and does not require separate removal.

Preparatory steps

- Power-down the inverter
- Remove the Operator Panel from the Power Module
- Allow at least 5 minutes for the Power Module to completely discharge
- Disconnect all the cables from the Power Module
- Place the Power Module face-down on a clean and safe surface

Removal

1. Place your fingers into the two fan housing recesses (indicated in the figure below as ①).
2. Push your fingers together to release the fan module retaining clips.
3. Pull the fan module out (indicated in the figure below as ②).

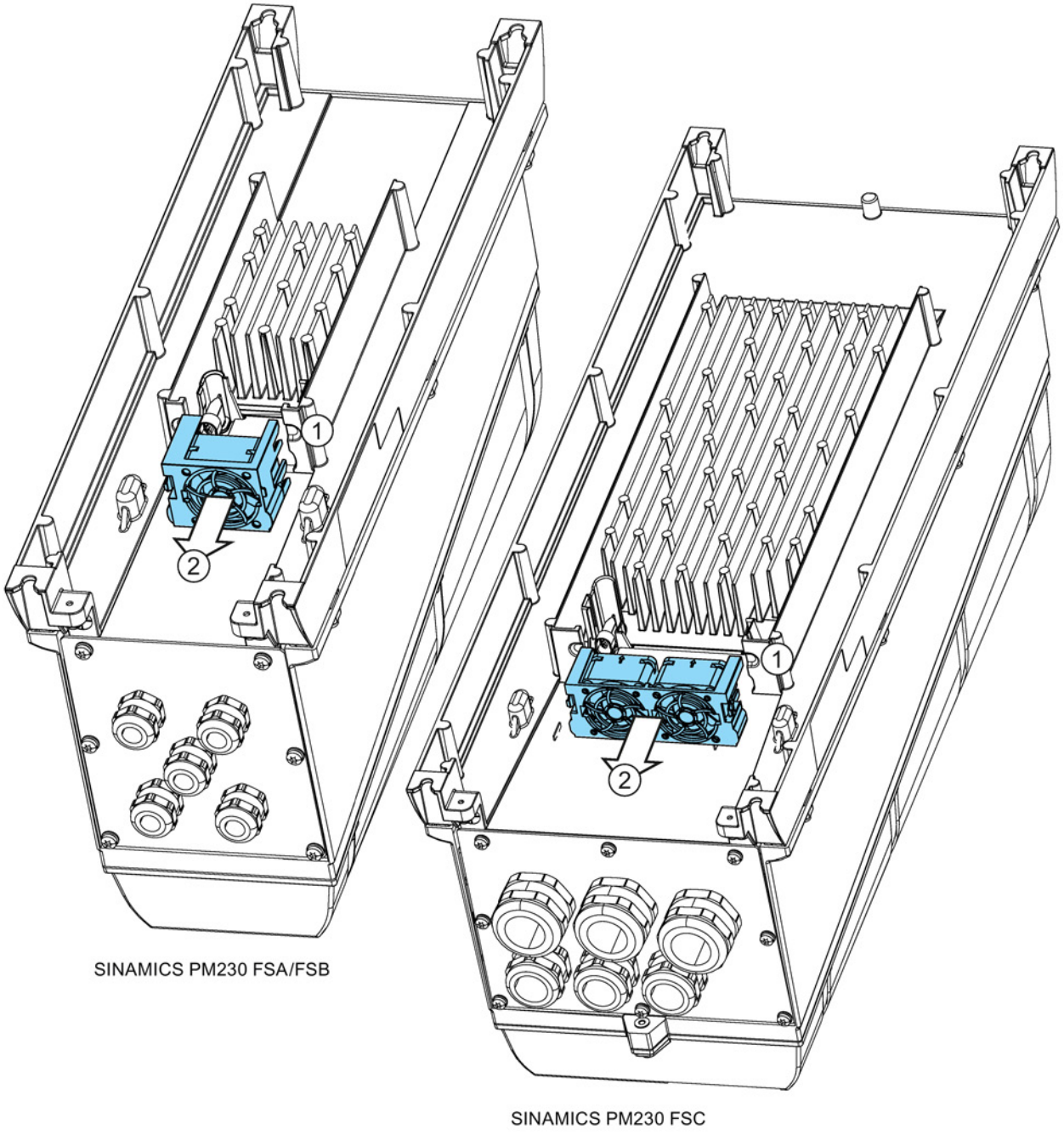

Figure 5-1 SINAMICS PM230 FSA ... FSC fan replacement

Installation

For re-installation, carry out the above steps in reverse order.

Replacing the external cooling fan FSD … FSF

The PM230 Power Modules have two sets of cooling fans, one fan is internal and the other is external. The external cooling fans at the top of the Power Module.

The external cooling fans on the PM230 FSD to FSF are a complete fan modules.

Preparatory steps

- Power-down the inverter
- Remove the Operator Panel from the Power Module
- Allow at least 5 minutes for the Power Module to completely discharge
- Disconnect all the cables from the Power Module
- Place the Power Module face-down on a clean and safe surface

Removal

1. Using a posi-drive screwdriver, remove the fan retaining screws (indicated in the figure below as ①).
2. Pull the fan housing forward and remove the power connector for the fan modules (indicated in the figure below as ②).
   On FSD/FSE the power connector is located to the right of the fans, attached to the back of the fan housing plate. On FSF the power connector is located in between the two fans, attached to the back of the fan housing plate. The connector is shown in the figure below as a dashed-line outline because it is not visible from the front of the fan housing plate.
3. Pull the fan module out (indicated in the figure below as ③).

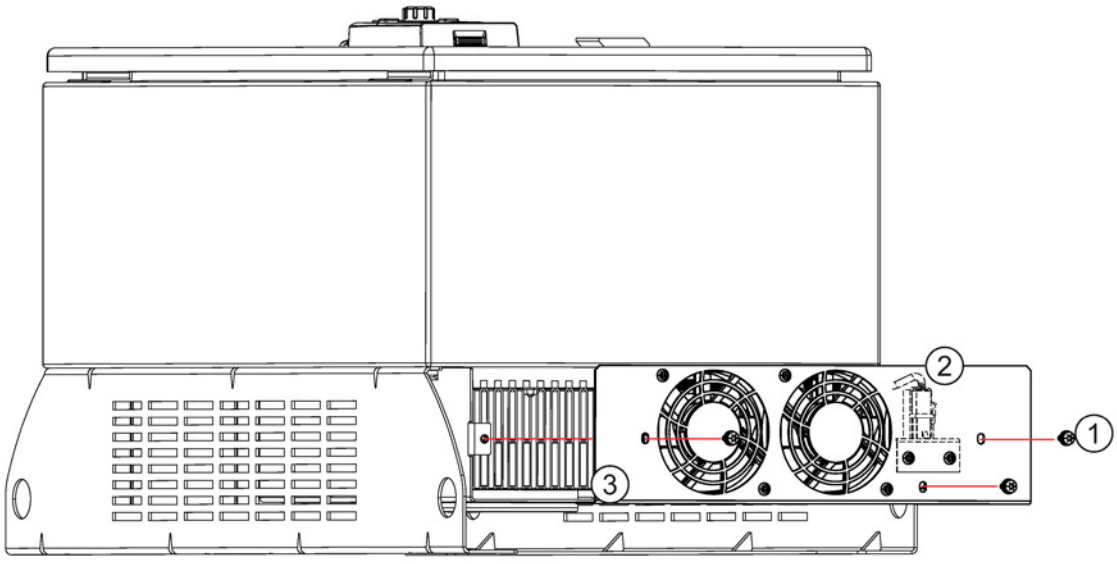

SINAMICS PM230 FSD/FSE

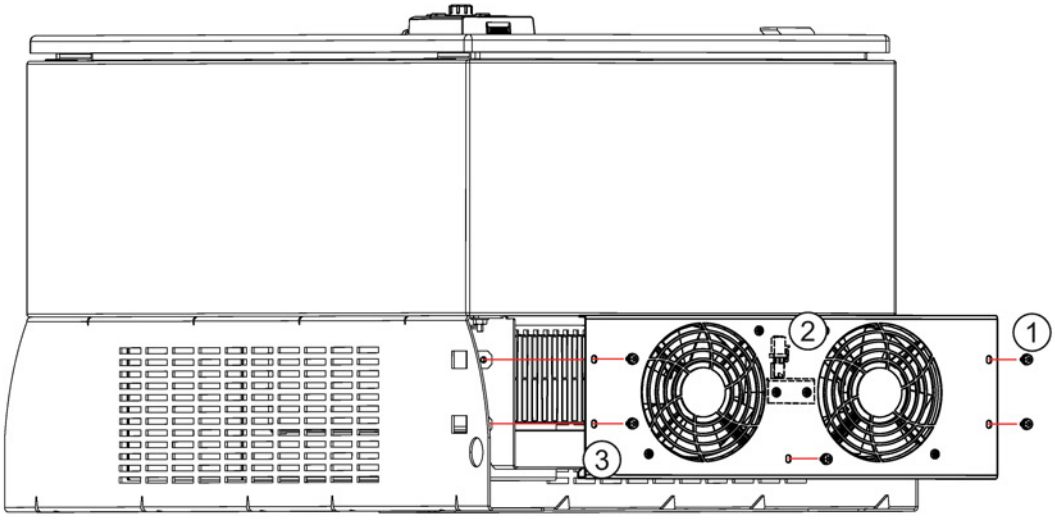

SINAMICS PM230 FSF

Figure 5-2 SINAMICS PM230 FSD ... FSF fan replacement

Installation

For re-installation, carry out the above steps in reverse order.

Replacing the internal cooling fan FSA ... FSC

The PM230 Power Modules have two sets of cooling fans, one fan is internal and the other is external. The internal cooling fan is mounted inside at the top of the Power Module housing.

The internal cooling fan on the PM230 FSA to FSC is a complete fan modules and does not require any tools to remove and replace the fan. The power connection on the fan unit is an integral part of the fan module and does not require separate removal.

Preparatory steps

- Power-down the Inverter (ensure that all external power sources are disconnected)
- Remove any external power to the Control Unit
- Allow at least 5 minutes for the Power Module to completely discharge.
- Remove the Power Module cover

Removal

1. Disconnect the fan module power lead (indicated in the figure below as ①).
2. Press down on the fan module release clip (indicated in the figure below as ②).
3. Pull the fan module out of the guide rail (indicated in the figure below as ③).

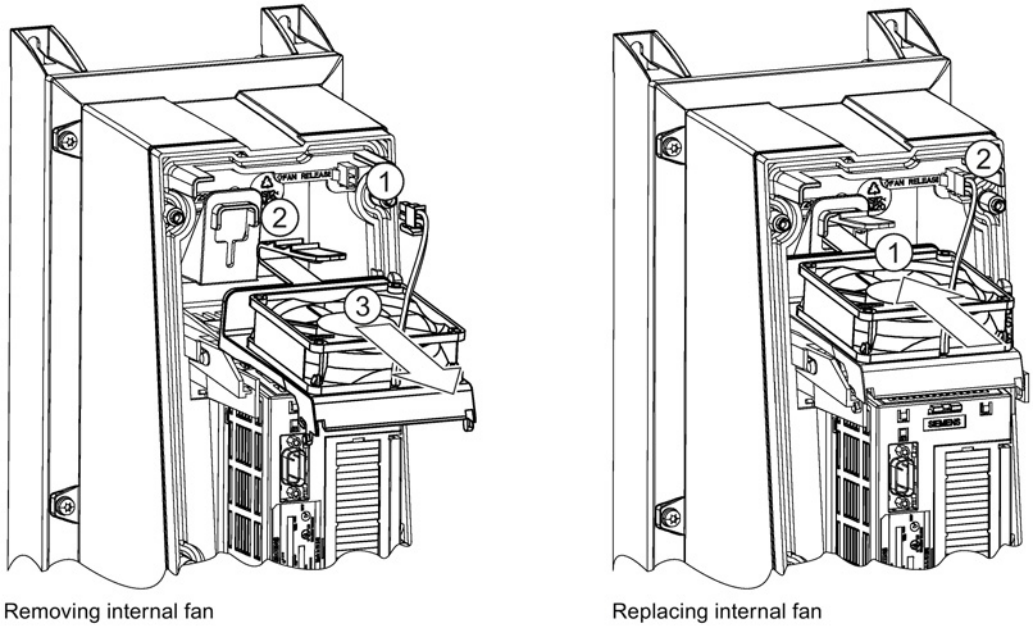

Figure 5-3 FSA to FSC internal fan replacement

Installation

1. Fit the fan module into the guide rail.
2. Push the fan module until the release clip clicks into place (indicated in the figure above as ①).
3. Connect the fan module power lead (indicated in the figure above as ②).
4. The fan module installation is now complete.

Replacing the internal cooling fan FSD ... FSF

The PM230 Power Modules have two sets of cooling fans, one fan is internal and the other is external. The internal cooling fan is mounted inside at the top of the Power Module housing.

The internal cooling fan on the PM230 FSD to FSF is a complete fan modules and require only a posi-drive screwdriver to remove and replace the fan module. The power connection on the fan module is an integral part of the fan module and does not require separate removal.

Preparatory steps

- Power-down the Inverter (ensure that all external power sources are disconnected)
- Remove any external power to the Control Unit
- Allow at least 5 minutes for the Power Module to completely discharge.
- Open the enclosure door.

Removal

1. Disconnect the fan module power lead (indicated in the figure below as ①).
2. Remove the fan module retaining screw (indicated in the figure below as ②).
3. Unhook the fan module from the fan module housing (indicated in the figure below as ③).
4. Pull the fan module forward, clear of the fan module housing.

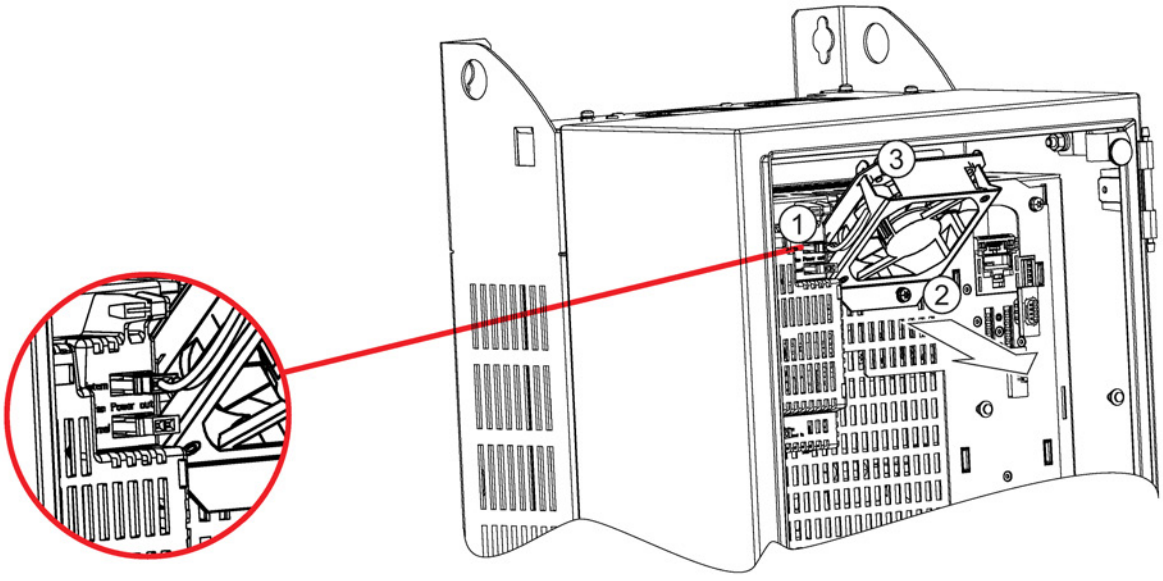

Removing internal fan

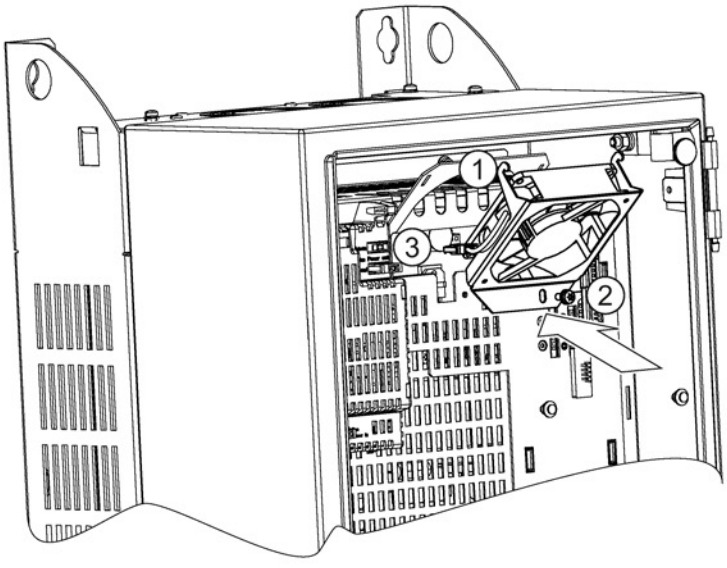

Replacing internal fan

Figure 5-4 FSD to FSF internal fan replacement

Installation

1. Hook the fan module into the fan module housing (indicated in the figure above as ①).
2. Push the fan module towards the fan module housing (indicated in the figure above as ②.
3. Replace the fan module retaining screw and tighten.
4. Connect the fan module power lead (indicated in the figure above as ③).
5. The fan module installation is now complete.

5.2.1.1 Replacement fans

Replacement fans order details

The external and internal cooling fans of the PM230 are customer replaceable self-contained modules. Listed below are the order details of the various fan assembles. It should be noted that these fan assemblies are complete modules and require no other components.

FSA external fan replacement module

Order number: 6SL3200-0SF21-0AA1

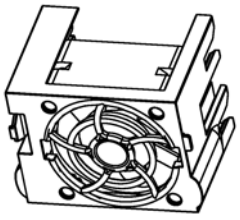

Figure 5-5 Replacement external fan module FSA

FSB external fan replacement module

Order number: 6SL3200-0SF22-0AA1

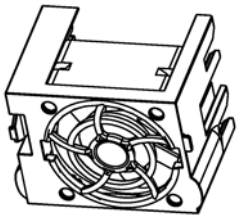

Figure 5-6 Replacement external fan module FSB

FSC external fan replacement module

Order number:	up to 15 kW:	6SL3200-0SF23-0AA1
	18.5 kW:	6SL3200-0SF23-0AA0

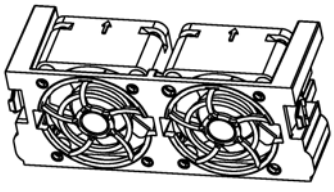

Figure 5-7 Replacement external fan module FSC

FSD and FSE external fan replacement module

Order number: 6SL3200-0SF24-0AA0

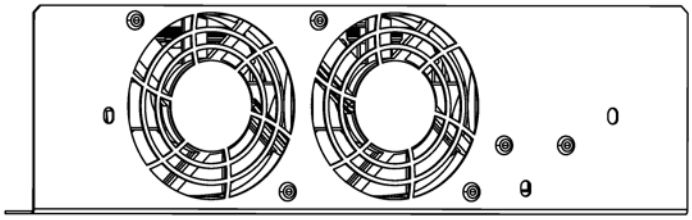

Figure 5-8 Replacement external fan module FSD & FSE

FSF external fan replacement module

Order number: 6SL3200-0SF26-0AA0

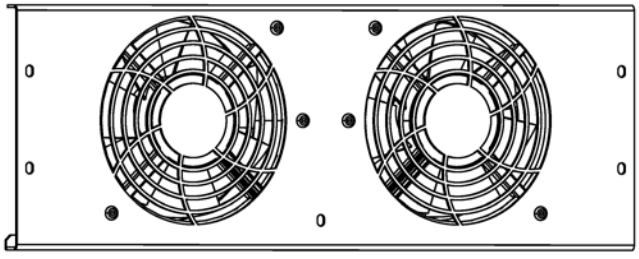

Figure 5-9 Replacement external fan module FSF

FSA to FSC internal fan replacement module

Order number: 6SL3200-0SF31-0AA0

Figure 5-10 Replacement internal fan module FSA to FSC

FSD to FSF internal fan replacement module

Order number: 6SL3200-0SF32-0AA0

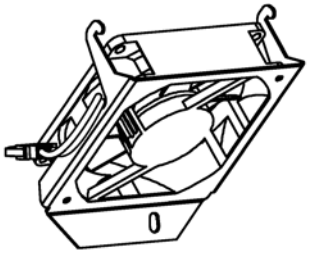

Figure 5-11 Replacement internal fan module FSD to FSF

5.3 Spares and accessories

Order details

A summary of all the spares and accessories that are available for the PM230 Power Module are listed in the table below.

Table 5- 1 Spares and accessories for the PM230

Item	Content - description	Order Number
Accessory bag	The accessory bag contains all the necessary components to allow the Power Module to be screened and connected to the mains supply and motor (excluding cables and tools). It consists of the following items: • Plug-in connector for mains input • Plug-in connector for motor output • Adjustable clamp for screening kit • Grommets 7 to 12 mm (IP66) • D-type adapter for Operator Panel • Head screws (M4x20, T20) • Output power terminal screws (M4) • Ferrite rings (appropriate for each frame size) • Extended USB cable (FSA to FSC only) There is a specific accessory bag available for each frame size.	6SL3200-0SK02-0AA0 (for FSA) 6SL3200-0SK03-0AA0 (for FSB) 6SL3200-0SK04-0AA0 (for FSC) 6SL3200-0SK05-0AA0 (for FSD) 6SL3200-0SK06-0AA0 (for FSE) 6SL3200-0SK07-0AA0 (for FSF)
Blind cover	The blind cover is designed to allow the PM230 to achieve the IP55/UL Type 12 protection level if an Operator Panel is not fitted to the unit.	6SL3256-1BA00-0AA0
External fan FSA	Replacement external fan for Frame Size A	6SL3200-0SF21-0AA1
External fan FSB	Replacement external fan for Frame Size B	6SL3200-0SF22-0AA1
External fan FSC	Replacement external fan for Frame Size C up to 15 kW	6SL3200-0SF23-0AA1
	Replacement external fan for Frame Size C 18.5 kW	6SL3200-0SF23-0AA0
External fan FSD	Replacement external fan for Frame Size D	6SL3200-0SF24-0AA0
External fan FSE	Replacement external fan for Frame Size E	6SL3200-0SF24-0AA0
External fan FSF	Replacement external fan for Frame Size F	6SL3200-0SF26-0AA0
Internal fan	Replacement internal fan for Frame Sizes A to C	6SL3200-0SF31-0AA0
Internal fan	Replacement internal fan for Frame Sizes D to F	6SL3200-0SF32-0AA0

Technical specifications

6

Permissible converter overload

The converters have different power ratings "High Overload" and "Low Overload" depending on the expected load.

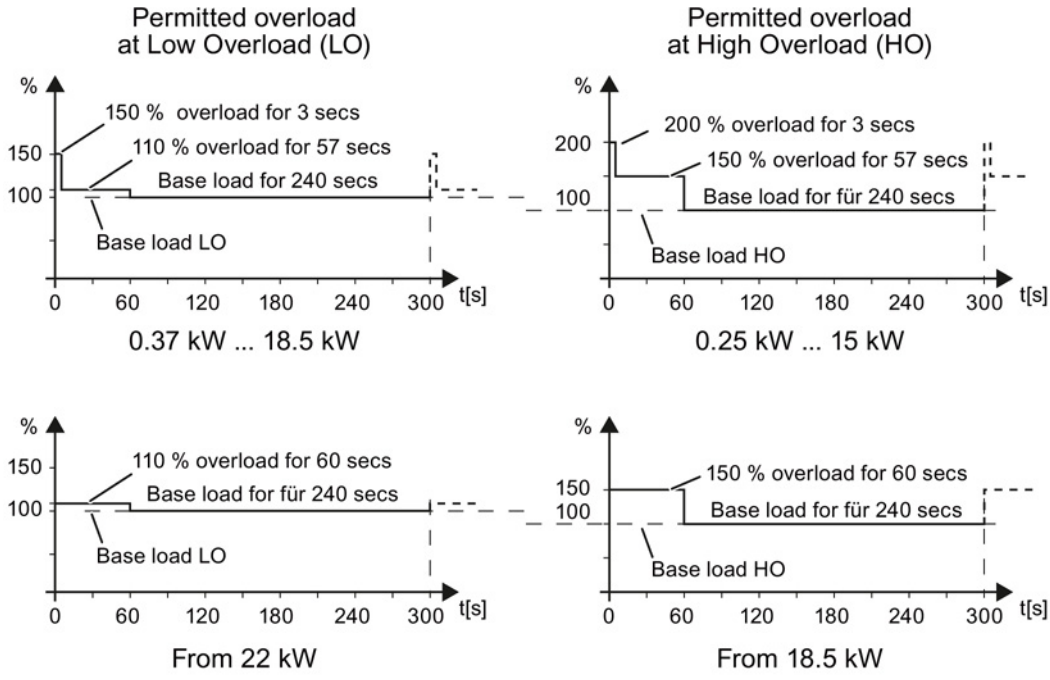

Figure 6-1 Duty cycles, "High Overload" and "Low Overload"

Note

Please note the base load (100 % power or current) for Low Overload is higher than the base load for High Overload.

The load characteristics shown in the diagram are only examples. We recommend the use of the "SIZER" engineering software to select the appropriate Power Modules using duty cycles. See http://support.automation.siemens.com/WW/view/de/10804987/130000 (http://support.automation.siemens.com/WW/view/en/10804987/130000).

Definitions

- **LO input current** 100 % of the permissible input current with a load cycle according to Low Overload.
- **LO output current** 100 % of the permissible output current with a load cycle according to Low Overload.
- **LO power** Power of the Unit at LO output current.
- **HO input current** 100 % of the permissible input current with a load cycle according to High Overload.
- **HO output current** 100 % of the permissible output current with a load cycle according to High Overload.
- **HO power** Power of the Unit at HO output current.

6.1 General data, PM230, IP55

Feature	Version
Line voltage	380°V°...°480°V 3-ph.°AC ±°10%
Output voltage	0 V 3-ph. AC … input voltage x 0.95 (max.)
Input frequency	50 Hz … 60 Hz, ± 3 Hz
Output frequency	0 Hz … 550 Hz, depending on the control mode
Power factor λ	0.9
Line impedance	Uk ≤ 1%, no line reactor permitted
Starting current	Less than the input current
Pulse frequency (factory setting)	4 kHz The pulse frequency can be increased in 2 kHz steps up to 16 kHz (up to 8 kHz for 75 kW and 90 kW). An increase in the pulse frequency results in a lower output current.
Electromagnetic compatibility	**Conducted interference**: The Power Modules correspond to Categories C1 and C2 of the second environment according to IEC61800-3. **Radiated interference**: The Power Modules comply with Category C2 of the second environment according to IEC61800-3. For details, see Electromagnetic Compatibility (Page 83)
Braking methods	DC braking
Degree of protection	FSA … FSC IP55 / UL Type 12 FSD … FSF IP55 / UL Type 12 in preparation Note: For the end cover plate, you must use the relevant bolting plates for the cable glands and the corresponding cable glands and seals to achieve the degree of protection UP55 (UL type 12). Degree of protection IP54 / UL Type 12 is reached if an IOP is inserted.
Operating temperature	for operation with LO base load power: -10 °C … +40 °C; with derating up to 60° C for operation with HO base load power: -10 °C °… +50 °C; with derating up to 60° C
	Derating see Temperature, altitude and voltage derating PM230 (Page 75)
Storage temperature	-40 °C … +70 °C

Feature	Version
Relative humidity	< 95% - condensation not permissible
Contamination	Protected from contact with dangerous parts, dust, spray water and water jets
Environmental requirements	Protected against damaging chemical substances according to environmental class 3C2 to EN 60721-3-3: 1995
Shock and vibration	• Long-term storage in the transport packaging according to Class 1M2 to EN 60721-3-1: 1997 • Transport in the transport packaging according to Class 2M3 to EN 60721-3-2: 1997 • Vibration during operation according to Class 3M2 to EN 60721-3-3: 1995
Installation altitude	without derating: up to 1000 m above sea level with derating: up to 4000 m above sea level
	Derating see Temperature, altitude and voltage derating PM230 (Page 75)
Rated short-circuit current	When fused using a type J or 3NE1 fuse, rated voltage 480 V AC with the rated current of the specific inverter. FSA ... FSC: 40 kA FSD ... FSF: 65 kA

6.2 Temperature, altitude and voltage derating PM230

Operating temperature derating

The operating temperature range is shown diagramatically in the figures below:

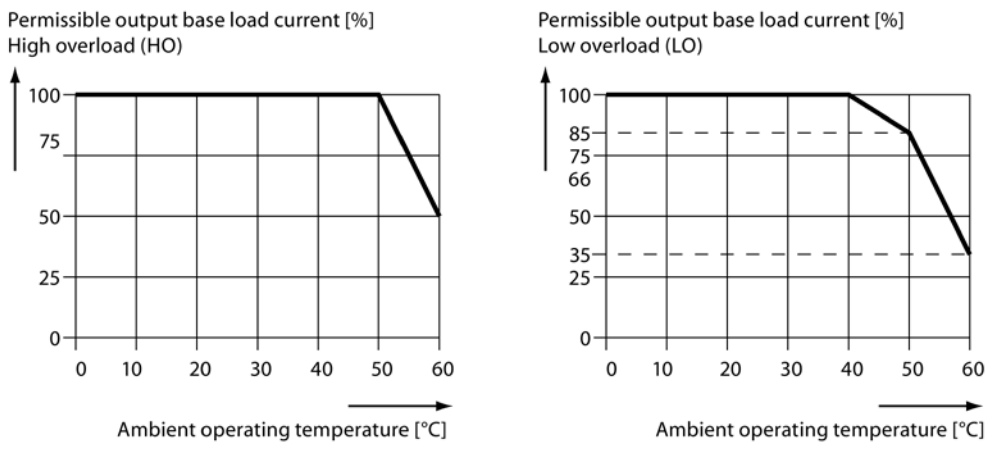

Figure 6-2 Current derating for temperature PM230 FSA ... FSF

Operational altitude derating

The figures below show the derating required according to altitude.

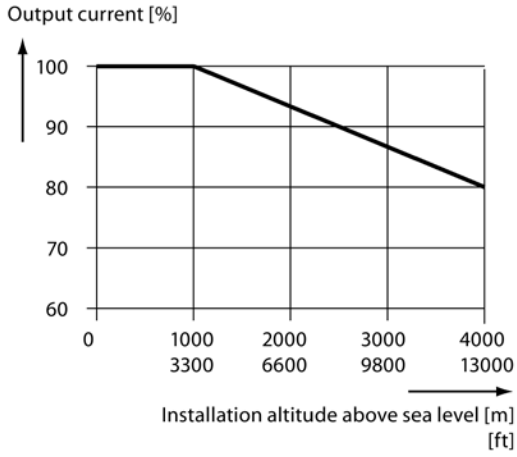

Altitude derating current FSA ... FSF

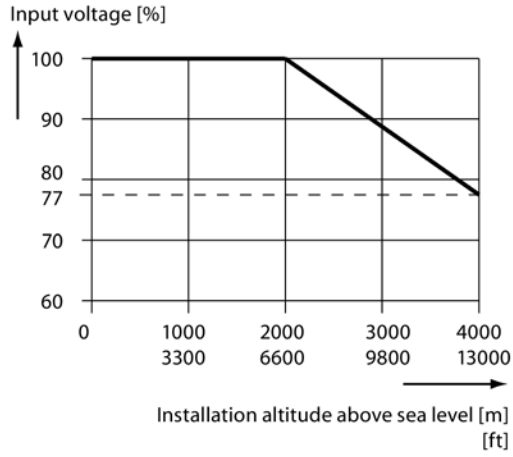

Altitude derating voltage FSA ... FSF

Operational voltage derating

The figures below show the derating required according to voltage

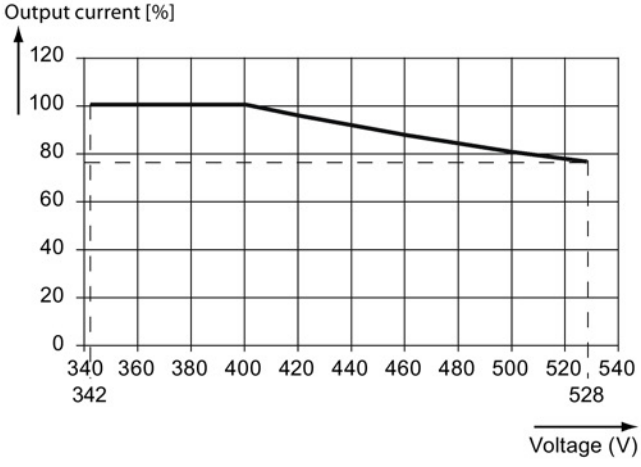

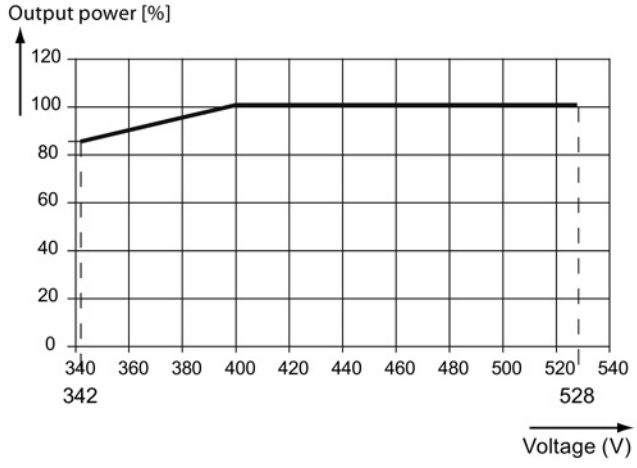

Figure 6-3 Derating for voltage

6.3 Technical data

6.3.1 Input current operation

Note

The Power Module is only for operation at a maximum line impedance of 1% Vk. No line reactor can be used with the Power Module.

Note

UL-certified fuses must be used

In order that the system is in compliance with UL, UL certified fuses, circuit breakers or self-protected combination motor controllers must be used.

Note

The values for Low Overload (LO) are identical with those of the rated values.

Table 6- 1 PM230, IP55, frame sizes A, 3-ph. 380 V AC… 480 V

Order No. - with filter, Class A **Order No. - with filter Class B**	**6SL3223-…** **6SL3223-…**	**…0DE13-7AA1** **…0DE13-7BA1**	**…0DE15-5AA1** **…0DE15-5BA1**	**…0DE17-5AA1** **…0DE17-5BA1**
LO base load power LO base load input current LO base load output current		0.37 kW 1.3 A 1.3 A	0.55 kW 1.8 A 1.7 A	0.75 kW 2.3 A 2.2 A
HO base load power HO base load input current HO base load output current		0.25 kW 0.9 A 0.9 A	0.37 kW 1.3 A 1.3 A	0.55 kW 1.8 A 1.7 A
Fuse according to IEC Fuse according to UL		3NA3803 10 A, Class J	3NA3803 10 A, Class J	3NA3803 10 A, Class J
Power loss		0.06 kW	0.06 kW	0.06 kW
Required cooling air flow		7 l/s	7 l/s	7 l/s
Cross section of line and motor cables		1 … 2.5 mm^2 18 … 14 AWG	1 … 2.5 mm^2 18 … 14 AWG	1 … 2.5 mm^2 18 … 14 AWG
Tightening torque for line and motor cables		0.5 Nm / 4.4 lbf in	0.5 Nm / 4.4 lbf in	0.5 Nm / 4.4 lbf in
Weight		4.3 kg	4.3 kg	4.3 kg

Table 6- 2 PM230, IP55, frame sizes A, 3-ph. 380 V AC… 480 V

Order No. - with filter, Class A Order No. - with filter Class B	6SL3223-… 6SL3223-…	…0DE21-1AA1 …0DE21-1BA1	…0DE21-5AA1 …0DE21-5BA1	…0DE22-2AA1 …0DE22-2BA1
LO base load power LO base load input current LO base load output current		1.1 kW 3.2 A 3.1 A	1.5 kW 4.2 A 4.1 A	2.2 kW 6.1 A 5.9 A
HO base load power HO base load input current HO base load output current		0.75 kW 2.3 A 2.2 A	1.1 kW 3.2 A 3.1 A	1.5 kW 4.2 A 4.1 A
Fuse according to IEC Fuse according to UL		3NA3803 10 A, Class J	3NA3803 10 A, Class J	3NA3803 10 A, Class J
Power loss		0.07 kW	0.08 kW	0.1 kW
Required cooling air flow		7 l/s	7 l/s	7 l/s
Cross section of line and motor cables		1 … 2.5 mm^2 18 … 14 AWG	1 … 2.5 mm^2 18 … 14 AWG	1 … 2.5 mm^2 18 … 14 AWG
Tightening torque for line and motor cables		0.5 Nm / 4.4 lbf in	0.5 Nm / 4.4 lbf in	0.5 Nm / 4.4 lbf in
Weight		4.3 kg	4.3 kg	4.3 kg

Table 6- 3 PM230, IP55, frame sizes A, 3-ph. 380 V AC… 480 V

Order No. - with filter, Class A Order No. - with filter Class B	6SL3223-… 6SL3223-…	…0DE23-0AA1 …0DE23-0BA1
LO base load power LO base load input current LO base load output current		3 kW 8.0 A 7.7 A
HO base load power HO base load input current HO base load output current		2.2 kW 6.1 A 5.9 A
Fuse according to IEC Fuse according to UL		3NA3803 10 A, Class J
Power loss		0.12 kW
Required cooling air flow		7 l/s
Cross section of line and motor cables		1 … 2.5 mm^2 18 … 14 AWG
Tightening torque for line and motor cables		0.5 Nm / 4.4 lbf in
Weight		4.3 kg

Table 6- 4 PM230, IP55, frame sizes B, 3-ph. 380 V AC… 480 V

Order No. - with filter, Class A Order No. - with filter Class B	6SL3223-… 6SL3223-…	…0DE24-0AA1 …0DE24-0BA1	…0DE25-5AA1 …0DE25-5BA1	…0DE27-5AA1 …0DE27-5BA1
LO base load power LO base load input current LO base load output current		4 kW 10.5 A 10.2 A	5.5 kW 13.6 A 13.2 A	7.5 kW 18.6 A 18 A
HO base load power HO base load input current HO base load output current		3 kW 8.0 A 7.7 A	4 kW 10.5 A 10.2 A	5.5 kW 13.6 A 13.2 A
Fuse according to IEC Fuse according to UL		3NA3805 16 A, Class J	3NA3807 25 A, Class J	3NA3810 35 A, Class J
Power loss		0.14 kW	0.18 kW	0.24 kW
Required cooling air flow		9 l/s	9 l/s	9 l/s
Cross section of line and motor cables		2.5 … 6 mm^2 14 … 10 AWG	4 … 6 mm^2 12 … 10 AWG	4 … 6 mm^2 12 … 10 AWG
Tightening torque for line and motor cables		0.5 Nm / 4.4 lbf in	0.5 Nm / 4.4 lbf in	0.5 Nm / 4.4 lbf in
Weight		6.3 kg	6.3 kg	6.3 kg

Table 6- 5 PM230, IP55, frame sizes C, 3-ph. 380 V AC… 480 V

Order No. - with filter, Class A Order No. - with filter Class B	6SL3223-… 6SL3223-…	…0DE31-1AA1 …0DE31-1BA1	…0DE31-5AA1 …0DE31-5BA1	…0DE31-8AA1 ---
LO base load power LO base load input current LO base load output current		11 kW 26.9 A 26 A	15 kW 33.1 A 32 A	18.5 kW 39.2 A 38 A
HO base load power HO base load input current HO base load output current		7.5 kW 18.6 A 18 A	11 kW 26.9 A 26 A	15 kW 33.1 A 32 A
Fuse according to IEC Fuse according to UL		3NA3814 40 A, Class J	3NA3820 50 A, Class J	3NA3820 50 A, Class J
Power loss		0.32 kW	0.39 kW	0.46 kW
Required cooling air flow		20 l/s	20 l/s	20 l/s
Cross section of line and motor cables		6 … 16 mm^2 10 … 5 AWG	10 … 16 mm^2 7 … 5 AWG	10 … 16 mm^2 7 … 5 AWG
Tightening torque for line and motor cables		1.5 Nm / 13 lbf in	1.5 Nm / 13 lbf in	1.5 Nm / 13 lbf in
Weight		9.5 kg	9.5 kg	9.5 kg

Table 6- 6 PM230, IP55, Frame Sizes D, 3 AC 380 V … 480 V

Order No. - with filter, Class A Order No. - with filter Class B	6SL3223-… 6SL3223-…	- …0DE31-8BA0	…0DE32-2AA0 …0DE32-2BA0	…0DE33-0AA0 …0DE33-0BA0
LO base load power LO base load input current LO base load output current		18.5 kW 39.2 A 38 A	22 kW 42 A 45 A	30 kW 56 A 60 A
HO base load power HO base load input current HO base load output current		15 kW 33.1 A 32 A	18.5 kW 36 A 38 A	22 kW 42 A 45 A
Fuse according to IEC Fuse according to UL		3NA3820 50 A, Class J	3NA3822 63 A, Class J	3NA3824 80 A, Class J
Power loss		0.46 kW	0.52 kW	0.68 kW
Required cooling air flow		20 l/s	39 l/s	39 l/s
Cross section of line and motor cables		10 … 35 mm^2 7 … 2 AWG	16 … 35 mm^2 5 … 2 AWG	16 … 35 mm^2 5 … 2 AWG
Tightening torque for line and motor cables		6 Nm / 53 lbf in	6 Nm / 53 lbf in	6 Nm / 53 lbf in
Weight		30.2 kg	30.2 kg	30.2 kg

Table 6- 7 PM230, IP55, Frame Sizes E, 3 AC 380 V … 480 V

Order No. - with filter, Class A Order No. - with filter Class B	6SL3223-… 6SL3223-…	…0DE33-7AA0 …0DE33-7BA0	…0DE34-5AA0 …0DE34-5BA0
LO base load power LO base load input current LO base load output current		37 kW 70 A 75 A	45 kW 84 A 90 A
HO base load power HO base load input current HO base load output current		30 kW 56 A 60 A	37 kW 70 A 75 A
Fuse according to IEC Fuse according to UL		3NA3830 100 A, Class J	3NA3832 125 A, Class J
Power loss		0.99 kW	1.2 kW
Required cooling air flow		39 l/s	39 l/s
Cross section of line and motor cables		25 … 50 mm^2 3 … 1 AWG	25 … 50 mm^2 3 … 1 AWG
Tightening torque for line and motor cables		6 Nm / 53 lbf in	6 Nm / 53 lbf in
Weight		35.8 kg	35.8 kg

Table 6- 8 PM230, IP55, Frame Sizes F, 3 AC 380 V … 480 V

Order No. - with filter, Class A Order No. - with filter Class B	6SL3223-… 6SL3223-…	…0DE35-5AA0 …0DE35-5BA0	…0DE37-5AA0 …0DE37-5BA0	…0DE38-8AA0 …0DE38-8BA0
LO base load power LO base load input current LO base load output current		55 kW 102 A 110 A	75 kW 135 A 145 A	90 kW 166 A 178 A
HO base load power HO base load input current HO base load output current		45 kW 84 A 90 A	55 kW 102 A 110 A	75 kW 135 A 145 A
Fuse according to IEC Fuse according to UL		3NA3836 160 A, Class J	3NA3140 200 A, Class J	3NA3144 250 A, Class J
Power loss		1.4 kW	1.9 kW	2.3 kW
Required cooling air flow		117 l/s	117 l/s	117 l/s
Cross section of line and motor cables		35 … 120 mm^2 2 … 4/0 AWG	35 … 120 mm^2 2 … 4/0 AWG	35 … 120 mm^2 2 … 4/0 AWG
Tightening torque for line and motor cables		13 Nm / 115 lbf in	13 Nm / 115 lbf in	13 Nm / 115 lbf in
Weight		70.0 kg	70.0 kg	70.0 kg

6.4 Current reduction depending on pulse frequency

Relationship between pulse frequency and output base-load current reduction

Table 6- 9 Current reduction depending on pulse frequency

LO base load	Output base-load current at pulse frequency of							
	2 kHz	4 kHz	6 kHz	8 kHz	10 kHz	12 kHz	14 kHz	16 kHz
kW	A	A	A	A	A	A	A	A
0.37	--	1.30	1.11	0.91	0.78	0.65	0.59	0.52
0.55	--	1.70	1.45	1.19	1.02	0.85	0.77	0.68
0.75	--	2.20	1.87	1.54	1.32	1.10	0.99	0.88
1.1	--	3.10	2.64	2.17	1.86	1.55	1.40	1.24
1.5	--	4.10	3.49	2.87	2.46	2.05	1.85	1.64
2.2	--	5.90	5.02	4.13	3.54	2.95	2.66	2.36
3.0	--	7.70	6.55	5.39	4.62	3.85	3.47	3.08
4.0	--	10.20	8.67	7.14	6.12	5.10	4.59	4.08
5.5	--	13.20	11.22	9.24	7.92	6.60	5.94	5.28
7.5	--	18.00	15.30	12.60	10.80	9.00	8.10	7.20
11.0	--	26.00	22.10	18.20	15.60	13.00	11.70	10.40
15.0	--	32.00	27.20	22.40	19.20	16.00	14.40	12.80
18.5	--	38.00	32.30	26.60	22.80	19.00	17.10	15.20
22	--	45.00	38.25	31.50	27.00	22.50	20.25	18.00
30	--	60.00	52.70	43.40	37.20	31.00	27.90	24.80
37	--	75.00	63.75	52.50	45.00	37.50	33.75	30.00
45	--	90.00	76.50	63.00	54.00	45.00	40.50	36.00
55	--	110.0	93.50	77.00	--	--	--	--
75	--	145.0	123.3	101.5	--	--	--	--
90	--	178.0	151.3	124.6	--	--	--	--

Appendix 7

7.1 Electromagnetic Compatibility

Electromagnetic compatibility

All manufacturers/assemblers of electrical apparatus which "performs a complete intrinsic function and is placed on the market as a single unit intended for the end user" must comply with the EMC directive EC/89/336.

There are three routes for the manufacturer/assembler to demonstrate compliance:

Self-certification

This is a manufacturer's declaration that the European standards applicable to the electrical environment for which the apparatus is intended have been met. Only standards that have been officially published in the Official Journal of the European Community can be cited in the manufacturer's declaration.

Technical construction file

A technical construction file can be prepared for the apparatus describing its EMC characteristics. This file must be approved by a ‘Competent Body’ appointed by the appropriate European government organization. This approach allows the use of standards that are still in preparation.

EMC Standards

The SINAMICS G120 drives have been tested in accordance with the EMC Product Standard EN 61800-3:2004.

7.2 Definition of the EMC Environment and Categories

Classification of EMC performance

The EMC environment and categories are defined within the EMC Product Standard EN 61800-3, as follows:

First Environment

An environment that includes domestic premises and establishments that are connected directly to a public low-voltage power supply network without the use of an intermediate transformer.

Note

For example: houses, apartments, commercial premises or offices in a residential building.

Second Environment

An environment that includes industrial premises and establishments that are not connected directly to a public low-voltage power supply network.

Note

For example: industrial and technical areas of buildings fed from a dedicated transformer.

Category C1

Power Drive System (PDS) of rated voltage less than 1000 V intended for use in the First (Domestic) Environment.

Category C2

Power Drive System (PDS) of rated voltage less than 1000 V, which is neither a plug in device nor a movable device, and when used in the First (Domestic) Environment, is only intended to be installed and commissioned by a professional.

Note

A professional is a person or an organization having necessary skills in installing and/or commissioning a Power Drive System (PDS), including their EMC aspects.

Category C3

Power Drive System (PDS) of rated voltage less than 1000 V intended for use in the Second (Industrial) Environment and not intended for use within the First (Domestic) Environment.

Table 7- 1 Compliance Table

Model	Remarks
Category C1 - First Environment	
--	The inverters with integrated Class B filters meet the requirements for category C1 for conducted emissions.
Category C2 - First Environment - Professional Use	
Filtered Variants	6SL3223-0DE**-*A** (integrated class A filter) 6SL3223-0DE**-*B** (integrated class B filter)
	Class A: 25 m screened cable type CY
	All units have integrated Class A or Class B filters
	When used in the First Environment this product may cause radio interference in which case mitigation measures may be required. Units require supply authority acceptance for connection to the public low-voltage power supply network. Please contact your local supply network provider.
Category C3 - Second Environment	
Unfiltered Variants	There are not unfiltered variants of the PM230 Power Module

Note

All drives should be installed and commissioned in accordance with the manufacturer’s guidelines and in accordance with good EMC practices.

For further information refer to SIEMENS application note "EMC Design Guidelines".

7.3 EMC overall performance

EMC Emissions

The SINAMICS G120 drives have been tested in accordance with the emission requirements of the category C2 (domestic) environment.

Table 7- 2 Conducted & Radiated Emissions

EMC Phenomenon	Standard	Level
Conducted Emissions	IEC61800-3	C1 and C2
Radiated Emissions	IEC61800-3	C2

Note

To achieve this performance the default switching frequency should not be exceeded. The PM230 complies with the above mentioned EMC emission requirements, only at the default settings of the Power Module.

The limits will not be met if the drive is not installed in accordance with good EMC practices.

Harmonic Currents

The harmonic current emissions from the SINAMICS PM230 is as follows:

Table 7- 3 Harmonic Currents

Rating	Typical Harmonic Current (% of rated input current)							
	5th	7th	11th	13th	17th	19th	23rd	25th
FSA … FSF (400 V, 370 W … 90.0 kW)	20	14	9.1	7.7	5.9	5.3	4.3	4.0

Note

Units installed within the category C2 (domestic) environment require connection to the public low-voltage power supply network. Please contact your local supply network provider.

Units installed within the category C3 (industrial) environment do not require connection approval.

EMC Immunity

The SINAMICS PM230 has been tested in accordance with the immunity requirements of category C3 (industrial) environment:

Table 7- 4 EMC Immunity

EMC Phenomenon	Standard	Level	Performance Criterion
Electrostatic Discharge (ESD)	EN 61000-4-2	4 kV Contact discharge	A
		8 kV Air discharge	
Radio-frequency Electromagnetic Field	EN 61000-4-3	80 MHz … 1000 MHz 10 V/m	A
Amplitude modulated		80% AM at 1 kHz	
Fast Transient Bursts	EN 61000-4-4	2 kV @ 5 kHz	A
Surge Voltage	EN 61000-4-5	1 kV differential (L-L)	A
1.2/50 µs		2 kV common (L-E)	
Conducted	EN 61000-4-6	0.15 MHz … 80 MHz 10 V/rms	A
Radio-frequency Common Mode		80% AM at 1 kHz	
Mains Interruptions & Voltage Dips	EN 61000-4-11	95% dip for 3 ms	A
		30% dip for 10 ms	C
		60% dip for 100 ms	C
		95% dip for 5000 ms	C
Voltage Distortion	EN 61000-2-4 Class 3	10% THD	A
Voltage Unbalance	EN 61000-2-4 Class 3	3% Negative Phase Sequence	A
Frequency Variation	EN 61000-2-4 Class 3	Nominal 50 Hz or 60 Hz (± 45%)	A
Commutation Notches	EN 60146-1-1 Class B	Depth = 40%	A
		Area = 250% x degrees	

Note

The immunity requirements apply equally to both filtered and unfiltered units.

7.4 Standards

European Low Voltage Directive

The SINAMICS G120 product range complies with the requirements of the Low Voltage Directive 2006/95/EC. The units are certified for complaince with the following standards:

EN 61800-5-1 — Semiconductor inverters –General requirements and line commutated inverters

EN 60204-1 — Safety of machinery –Electrical equipment of machines

European Machinery Directive

The SINAMICS G120 inverter series does not fall under the scope of the Machinery Directive. However, the products have been fully evaluated for compliance with the essential Health & Safety requirements of the directive when used in a typical machine application. A Declaration of Incorporation is available on request.

European EMC Directive

When installed according to the recommendations described in this manual, the SINAMICS G120 fulfils all requirements of the EMC Directive as defined by the EMC Product Standard for Power Drive Systems EN 61800-3

ISO 9001

Siemens plc operates a quality management system, which complies with the requirements of ISO 9001.

Certificates can be downloaded from the internet under the following link:
http://support.automation.siemens.com/WW/view/en/22339653/134200
(http://support.automation.siemens.com/WW/view/en/22339653/134200)

7.5 Abbreviations

Abbreviation	State
AC	Alternating Current
CE	Communauté Européenne
CU	Control Unit
DC	Direct current
DI	Digital input
DIP	DIP switch
DO	Digital output
ECD	Equivalent circuit diagram
EEC	European Economic Community
ELCB	Earth leakage circuit breaker
EMC	Electromagnetic compatibility
EMI	Electromagnetic interference
FSA	Frame size A
FSB	Frame size B
FSC	Frame size C
FSD	Frame size D
FSE	Frame size E
FSF	Frame size F
FSGX	Frame size GX
GSG	Getting Started Guide
HO	High Overload (Constant Torque)
I/O	In-/output
IGBT	Insulated gate bipolar transistor
LED	Light emitting diode
LO	Light Overload (Variable Torque)
NC	Normally closed
NEMA	National Electrical Manufacturers Association
NO	Normally open
OPI	Operating Instructions
PELV	Protection by extra low voltage
PM	Power Module
PPE	Personal protective equipment
RCCB	Residual current circuit breaker
RCD	Residual current device
RFI	Radio frequency interference
SELV	Safety extra low voltage
VT	Variable torque

Index

A

Air cooling requirements, 21

C

Cable connection, 16
Cable cross-section, 39
Cable length, 39
Category C1, 39, 84
Category C2, 39, 84, 86
Category C3, **Fehler! Textmarke nicht definiert.**, 85
Class A, 86
Class A filter, 85, 85
Class B, 86
Classification of EMC performance, 84
Control Unit
    Fitting to the Power Module, 29
    Release button, 29
Current reduction, 82

D

Dimension drawings, 22
Drill pattern, 22

E

earth leakage, 14
ELCB, 14
Electrical installation, 37
Electromagnetic compatibility, 83
EMC Emissions, 86
EMC Standards, 83
European EMC Directive, 88
European Low Voltage Directive, 88
European Machinery Directive, 88
External line filter, 86

F

First environment, 39
First Environment, 84

G

General rules for protecting against environmental effects, 19
Ground cable, 42
Grounding, 42

H

Harmonic Currents, 86

I

IP20 degree of protection, 19
IPXXB degree of protection, 19
ISO 9001, 88
IT, 38

L

Leakage current, 37

M

Maintenance
    Contamination, 61
    Dirt, 61
    Terminals, 61
    Ventilation, 61
Minimum distance
    above, 22
    below, 22
    front, 22
    side by side, 22
mobile radio devices, 15

O

Operating temperature, 75
Operation with shielded cables, 39
Operation with ungrounded supplies, 38
Operation with unshielded cables, 39
Operational altitude, 76

P

PELV, 14, 43
Personal protective equipment, 19
Power and motor terminal layout, 50
Power Distribution Systems, 38
Power Drive System (PDS), 39, 84, **Fehler! Textmarke nicht definiert.**, 85
Power Modules
  Dimension drawings, 22
  Overview, 7
PPE, 19
Pulse frequency, 82

R

RCCB, 14
RCD, 14

S

Safety notes
  Commissioning, 16
  Dismantling and disposal, 17
  Electrical installation, 37
  General Warnings, Cautions and Notices, 14
  Operation, 17
  Repair, 17
  Safety Instructions, 13
  Transport and storage, 16
Screened cable, 85
Second Environment, 84
Self certification, 83
SELV, 14, 43
Service life of the fan, 62
SINAMICS G120 range, 7
Standards, 88
  2006/95/EC, 88
  EC/89/336, 83
  EN 55011, 86, 86
  EN 60146-1-1, 87
  EN 60204-1, 88
  EN 60950, 38
  EN 61000-2-4, 87, 87, 87
  EN 61000-4-11, 87
  EN 61000-4-2, 87
  EN 61000-4-3, 87
  EN 61000-4-4, 87
  EN 61000-4-5, 87
  EN 61000-4-6, 87
  EN 61800-3, 84, 88
  EN 61800-3, 84, 88
  EN 61800-3:2004, 83
  EN 61800-5-1, 88
  ISO 9001, 88
Static discharges, 15

T

Technical construction file, 83
Tightening torque, 22, 50
TN-C, 38
TN-C-S, 38
TN-S, 38
TT, 38

U

UL-certified fuses, 77

Further information

SINAMICS inverters:
www.siemens.com/sinamics

Siemens AG
Digital Factory
Motion Control
Postfach 3180
91050 ERLANGEN
GERMANY

Subject to change without prior notice
© Siemens AG 2013 - 2014

Scan the QR code for additional information about SINAMICS G120P.

www.siemens.com/drives