SIEMENS

MICROMASTER 430

Parameter List Issue 10/06

User Documentation
6SE6400-5AF00-0BP0

Available Documentation for the MICROMASTER 430

Getting Started Guide

Is for quick commissioning with SDP and BOP-2.

Operating Instructions

Gives information about features of the MICROMASTER 430, Installation, Commissioning, Control modes, System Parameter structure, Troubleshooting, Specifications and available options of the MICROMASTER 430.

Parameter List

The Parameter List contains the description of all Parameters structured in functional order and a detailed description. The Parameter list also includes a series of function plans.

Catalogues

In the catalogue you will find all needs to select a certain inverter, as well as filters chokes, operator panels or communications options.

SIEMENS

MICROMASTER 430

Parameter List
User Documentation

Valid for	Issue 10/06
Converter Type MICROMASTER 430	*Software Version* V2.1

Issue 10/06

Block Diagram and Terminals

Parameter List

Function Diagrams

Faults and Alarms

Abbreviations

Warning
Please refer to all Definitions and Warnings contained in the Operating Instructions. You will find the Operating Instructions on the Docu CD delivered with your inverter. If the CD is lost, it can be ordered via your local Siemens department under the Order No. 6SE6400-5AD00-1AP0.

Information about MICROMASTER 430 is also available from:

Regional Contacts

Please get in touch with your contact for Technical Support in your Region for questions about services, prices and conditions of Technical Support.

Central Technical Support

The competent consulting service for technical issues with a broad range of requirements-based services around our products and systems.

Europe / Africa
Tel: +49 (0) 180 5050 222
Fax: +49 (0) 180 5050 223
Email: adsupport@siemens.com

America
Tel: +1 423 262 2522
Fax: +1 423 262 2589
Email: simatic.hotline@sea.siemens.com

Asia / Pacific
Tel: +86 1064 757 575
Fax: +86 1064 747 474
Email: adsupport.asia@siemens.com

Online Service & Support

The comprehensive, generally available information system over the Internet, from product support to service & support to the support tools in the shop.

http://www.siemens.com/automation/service&support

Internet Address

Customers can access technical and general information under the following address:
http://www.siemens.com/micromaster

Printed in the Federal Republic of Germany

Approved Siemens Quality for Software and Training is to DIN ISO 9001, Reg. No. 2160-01

The reproduction, transmission or use of this document, or its contents is not permitted unless authorized in writing. Offenders will be liable for damages. All rights including rights created by patent grant or registration of a utility model or design are reserved.

© Siemens AG 2002 – 2006 All Rights Reserved.

MICROMASTER® is a registered trademark of Siemens Siemens-Aktiengesellschaft.

Other functions not described in this document may be available. However, this fact shall not constitute an obligation to supply such functions with a new control, or when servicing.

We have checked that the contents of this document correspond to the hardware and software described. There may be discrepancies nevertheless, and no guarantee can be given that they are completely identical. The information contained in this document is reviewed regularly and any necessary changes will be included in the next edition. We welcome suggestions for improvement.

Siemens handbooks are printed on chlorine-free paper that has been produced from managed sustainable forests. No solvents have been used in the printing or binding process.

Document subject to change without prior notice.

Printed in the Federal Republic of Germany Siemens-Aktiengesellschaft.

Parameters MICROMASTER 430

This Parameter List must only be used together with the Operating Instructions of the MICROMASTER 430. Please pay special attention to the Warnings, Cautions, Notices and Notes contained in these manuals.

Table of Contents

1 Block Diagram and Terminals 7
1.1 Block Diagram 7
1.2 Power Terminals 8
1.3 Control Terminals 11

2 Parameters 12
2.1 Introduction to MICROMASTER System Parameters 12
2.2 Quick commissioning (P0010 = 1) 15
2.3 Command and Drive Datasets - Overview 17
2.4 Binector Input Parameters 21
2.5 Connector Input Parameters 22
2.6 Binector Output Parameters 22
2.7 Connector Output Parameters 23
2.8 Connector/Binector Output Parameters 24

3 Parameter Description 25
3.1 Common parameters 25
3.2 Diagnosis parameters 29
3.3 Inverter parameters (HW) 38
3.4 Motor parameters 42
3.5 Speed encoder 53
3.6 Application macros 55
3.7 Motor temperature 56
3.8 Command source 59
3.9 Digital inputs 61
3.10 Digital outputs 68
3.11 Analog inputs 70
3.12 Analog outputs 78
3.13 Parameter / command / drive data set 82
3.14 BICO command parameters 87
3.15 Communication parameters 90
3.16 Setpoint source 95
3.17 Fixed frequencies 98
3.18 Motorized potentiometer (MOP) 105
3.19 Setpoint channel 107
3.20 Ramp-function generator 112

3.21 Flying restart ... 118
3.22 Automatic restart ... 120
3.23 Motor holding brake ... 122
3.24 DC braking ... 124
3.25 Compound braking ... 127
3.26 Vdc controller ... 128
3.27 Bypass ... 130
3.28 Control mode ... 133
3.29 V/f control parameters ... 134
3.29.1 Slip compensation ... 140
3.29.2 Resonance damping ... 141
3.29.3 Imax controller ... 142
3.29.4 Soft starting ... 144
3.30 Inverter parameters (Modulator) ... 145
3.31 Motor data identification ... 146
3.32 Reference parameters ... 147
3.33 Communication parameters (USS, CB) ... 150
3.34 Faults, Alarms, Monitoring ... 162
3.35 Load torque monitoring ... 173
3.36 Technology controller (PID controller) ... 177
3.37 Staging ... 192
3.38 Energy saving mode ... 198
3.39 Free function blocks (FFB) ... 199
3.40 Inverter parameters ... 215

4 Function Diagrams ... 217

5 Faults and Alarms ... 249
5.1 Fault messages ... 249
5.2 Alarm Messages ... 256

6 Abbreviations ... 261

1 Block Diagram and Terminals

1.1 Block Diagram

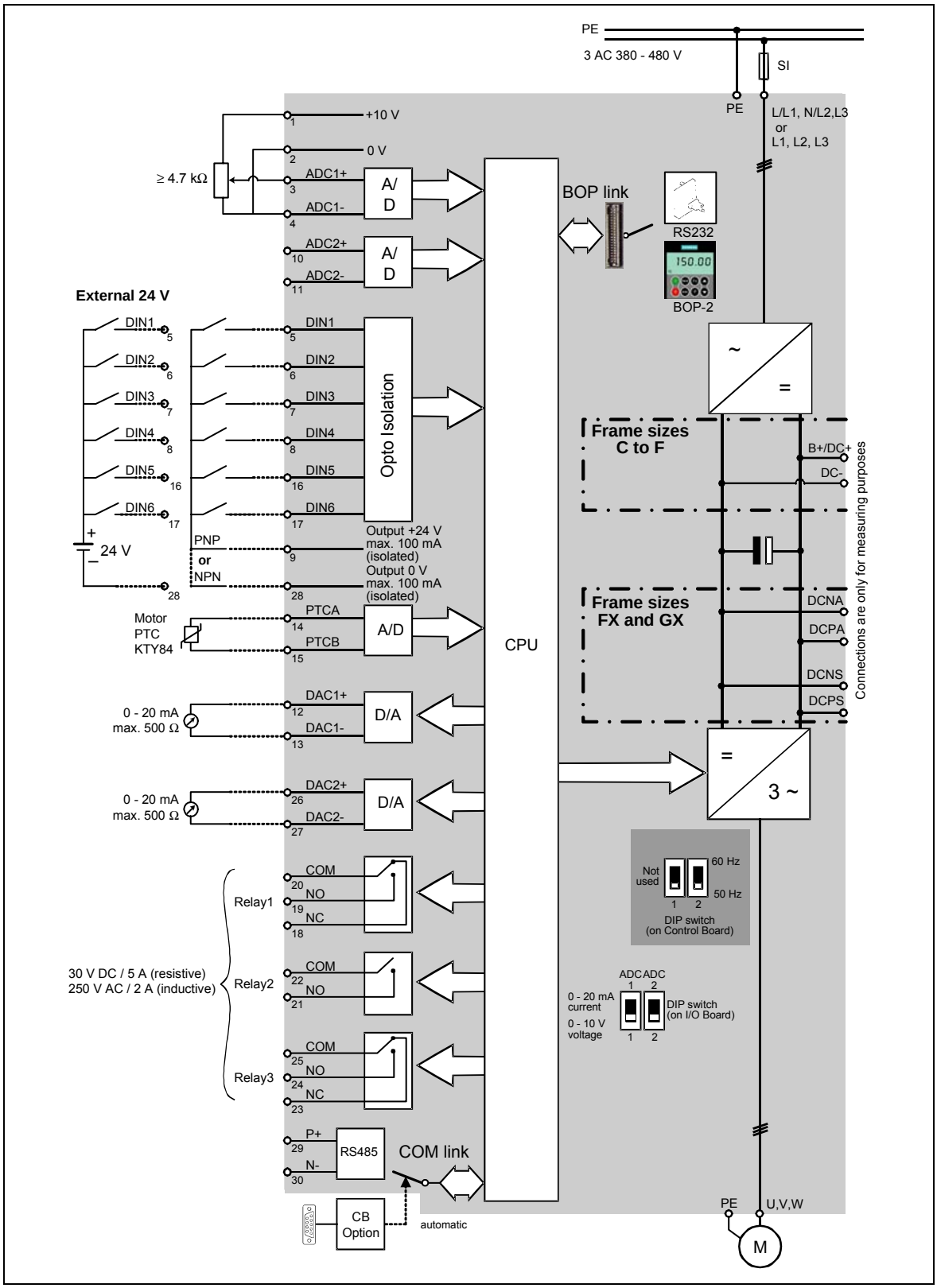

1.2 Power Terminals

You can gain access to the mains and motor terminals by removing the front covers.

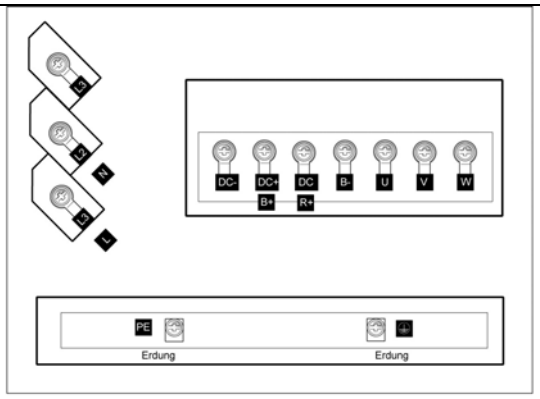

FRAME SIZE C

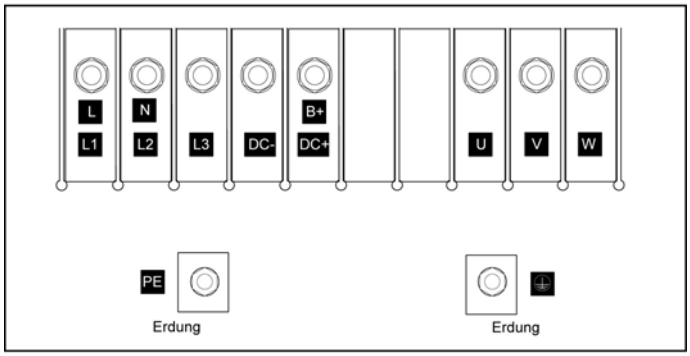

FRAME SIZE D & E

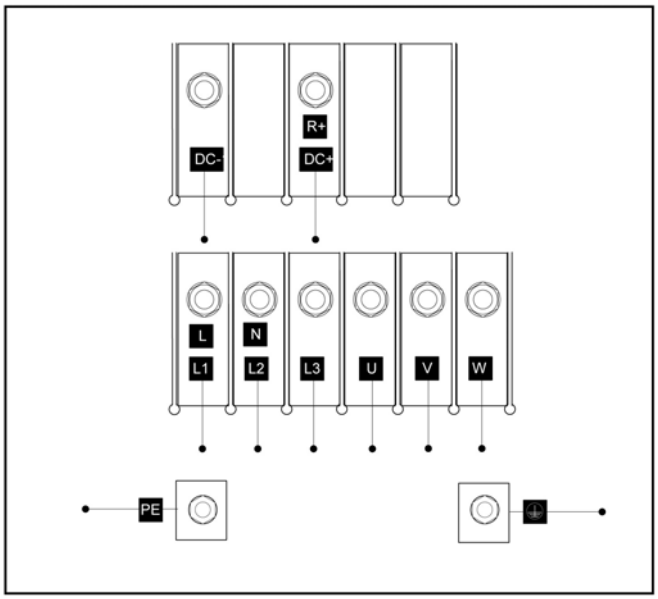

FRAME SIZE F

Fig. 1-1 Frame Size C - F

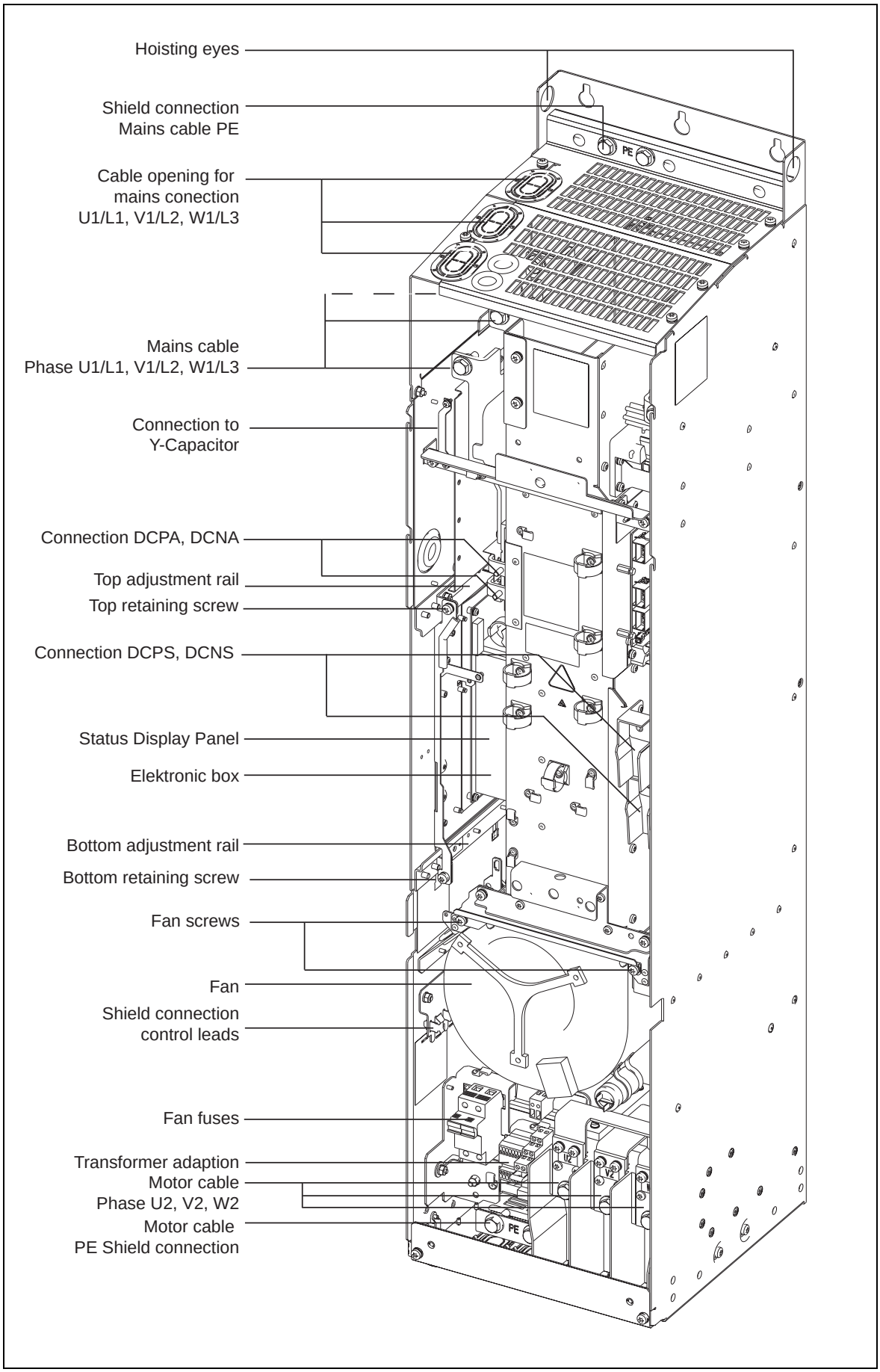

Fig. 1-2 Frame Size FX

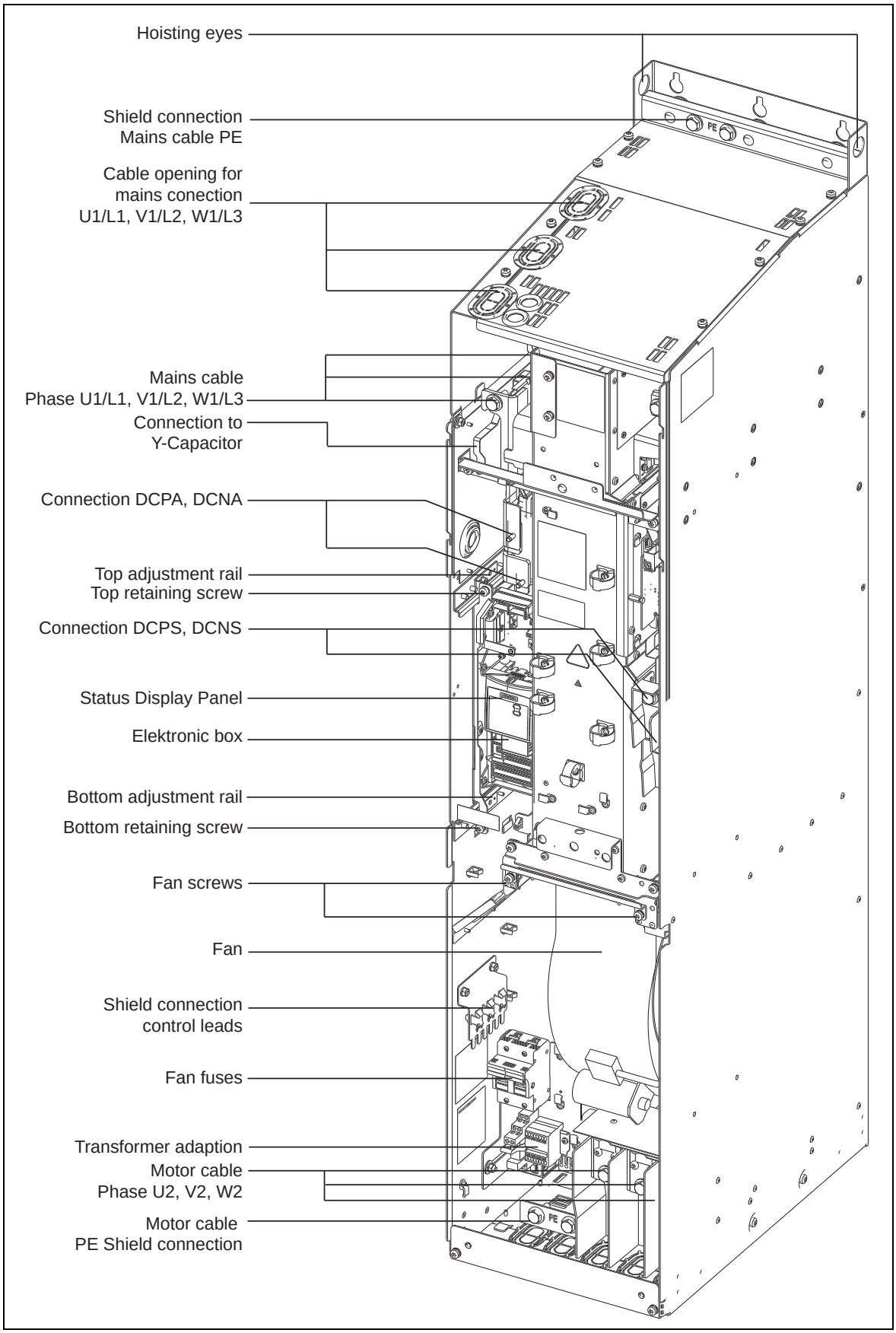

Fig. 1-3 Frame Size GX

1.3 Control Terminals

Terminal	Designation	Function
1	-	Output +10 V
2	-	Output 0 V
3	ADC1+	Analog input 1 (+)
4	ADC1-	Analog input 1 (-)
5	DIN1	Digital input 1
6	DIN2	Digital input 2
7	DIN3	Digital input 3
8	DIN4	Digital input 4
9	-	Isolated output +24 V / max. 100 mA
10	ADC2+	Analog input 2 (+)
11	ADC2-	Analog input 2 (-)
12	DAC1+	Analog output 1 (+)
13	DAC1-	Analog output 1 (-)
14	PTCA	Connection for PTC / KTY84
15	PTCB	Connection for PTC / KTY84
16	DIN5	Digital input 5
17	DIN6	Digital input 6
18	DOUT1/NC	Digital output 1 / NC contact
19	DOUT1/NO	Digital output 1 / NO contact
20	DOUT1/COM	Digital output 1 / Changeover contact
21	DOUT2/NO	Digital output 2 / NO contact
22	DOUT2/COM	Digital output 2 / Changeover contact
23	DOUT3/NC	Digital output 3 / NC contact
24	DOUT3/NO	Digital output 3 / NO contact
25	DOUT3/COM	Digital output 3 / Changeover contact
26	DAC2+	Analog output 2 (+)
27	DAC2-	Analog output 2 (-)
28	-	Isolated output 0 V / max. 100 mA
29	P+	RS485 port
30	N-	RS485 port

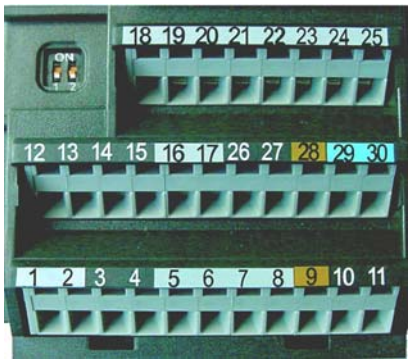

Fig. 1-4 Control terminals of MICROMASTER 430

2 Parameters

2.1 Introduction to MICROMASTER System Parameters

The layout of the parameter description is as follows.

1 Par number [index]	**2 Parameter name**			**9 Min:**	12 Level: **2**
	3 CStat:	**5 Datatype**	**7 Unit:**	**10 Def:**	
	4 P-Group:	**6 active:**	**8 Quick Comm:**	**11 Max:**	
	13	Description:			

1. **Parameter number**
   Indicates the relevant parameter number. The numbers used are 4-digit numbers in the range 0000 to 9999. Numbers prefixed with an “r” indicate that the parameter is a “read-only” parameter, which displays a particular value but cannot be changed directly by specifying a different value via this parameter number (in such cases, dashes “-“ are entered at the points “Unit”, “Min”, “Def” and “Max” in the header of the parameter description.
   All other parameters are prefixed with a “P”. The values of these parameters can be changed directly in the range indicated by the “Min” and “Max” settings in the header.

   [index] indicates that the parameter is an indexed parameter and specifies the number of indices available.
2. **Parameter name**
   Indicates the name of the relevant parameter.
   Certain parameter names include the following abbreviated prefixes: BI, BO, CI, and CO followed by a colon.

   These abbreviations have the following meanings:

BI	=	P9999.C (0)	Binector input, i.e. parameter selects the source of a binary signal
BO	=	r9999	Binector output, i.e. parameter connects as a binary signal
CI	=	P9999.D (999:9)	Connector input, i.e. parameter selects the source of an analog signal
CO	=	r9999 [99]	Connector output, i.e. parameter connects as an analog signal
CO/BO	=	r9999 r9999	Connector/Binector output, i.e. parameter connects as an analog signal and/or as a binary signal

   To make use of BiCo you will need access to the full parameter list. At this level many new parameter settings are possible, including BiCo functionality. BiCo functionality is a different, more flexible way of setting and combining input and output functions. It can be used in most cases in conjunction with the simple, level 2 settings.

   The BiCo system allows complex functions to be programmed. Boolean and mathematical relationships can be set up between inputs (digital, analog, serial etc.) and outputs (inverter current, frequency, analog output, relays, etc.).

3. **CStat**
   Commissioning status of the parameter. Three states are possible:
   Commissioning C
   Run U
   Ready to run T
   This indicates when the parameter can be changed. One, two or all three states may be specified. If all three states are specified, this means that it is possible to change this parameter setting in all three inverter states
4. **P-Group**
   Indicates the functional group of the particular.

   Note
   Parameter P0004 (parameter filter) acts as a filter and focuses access to parameters according to the functional group selected.

5. **Datatype**
   The data types available are shown in the table below.

Notation	Meaning
U16	16-bit unsigned
U32	32-bit unsigned
I16	16-bit integer
I32	32-bit integer
Float	Floating point

6. **Active**
   Indicates whether
   - Immediately changes to the parameter values take effective immediately after they have been entered, or
   - Confirm the “P” button on the operator panel (BOP-2) must be pressed before the changes take effect.
7. **Unit**
   Indicates the unit of measure applicable to the parameter values
8. **QuickComm**
   Indicates whether or not (Yes or No) a parameter can only be changed during quick commissioning, i.e. when P0010 (parameter groups for commissioning) is set to 1 (quick commissioning).
9. **Min**
   Indicates the minimum value to which the parameter can be set.
10. **Def**
    Indicates the default value, i.e. the value which applies if the user does not specify a particular value for the parameter.
11. **Max**
    Indicates the maximum value to which the parameter can be set.
12. **Level**
    Indicates the level of user access. There are four access levels: Standard, Extended, Expert and Service. Level 4 parameters are only for service purposes and not visible with BOP-2. The number of parameters that appear in each functional group depends on the access level set in P0003 (user access level).

13. **Description**
    The parameter description consists of the sections and contents listed below. Some of these sections and contents are optional and will be omitted on a case-to-case basis if not applicable.

    Description: Brief explanation of the parameter function.

    Diagram: Where applicable, diagram to illustrate the effects of parameters on a characteristic curve, for example

    Settings: List of applicable settings. These include
    Possible settings, Most common settings, Index and Bitfields

    Example: Optional example of the effects of a particular parameter setting.

    Dependency: Any conditions that must be satisfied in connection with this parameter. Also any particular effects, which this parameter has on other parameter(s) or which other parameters have on this one.

    Warning / Caution / Notice / Note:
    Important information which must be heeded to prevent personal injury or damage to equipment / specific information which should be heeded in order to avoid problems / information which may be helpful to the user

    More details: Any sources of more detailed information concerning the particular parameter.

Operators

The following operators are used in the parameter list to represent mathematical interrelationships:

Arithmetic operators

+	Addition
-	Subtraction
*	Multiplication
/	Division

Comparison operators

>	Greater than
>=	Greater than / equal to
<	Less than
<=	Less than / equal to

Equivalence operators

==	Equal to
!=	Not equal to

Logical operators

&&	AND logic operation
||	OR logic operation

2.2 Quick commissioning (P0010 = 1)

The following parameters are necessary for quick commissioning (P0010 = 1).

Quick commissioning (P0010 = 1)

Par.-No.	Name	Access level	Cstat
P0100	Europe / North America	1	C
P0304	Motor voltage rating	1	C
P0305	Motor current rating	1	C
P0307	Motor power rating	1	C
P0308	Motor cosPhi rating	1	C
P0309	Motor efficiency rating	1	C
P0310	Motor frequency rating	1	C
P0311	Motor speed rating	1	C
P0320	Motor magnetizing current	3	CT
P0335	Motor cooling	3	CT
P0500	Technological application	3	CT
P0640	Motor overload factor [%]	3	CUT
P0700	Selection of command source	1	CT
P1000	Selection of frequency setpoint	1	CT
P1080	Min. speed	1	CUT
P1082	Max. speed	1	CT
P1120	Ramp-up time	1	CUT
P1121	Ramp-down time	1	CUT
P1135	OFF3 ramp-down time	2	CUT
P1300	Control mode	3	CT
P1910	Select motor data identification	3	CT
P3900	End of quick commissioning	1	C

When P0010 = 1 is chosen, P0003 (user access level) can be used to select the parameters to be accessed. This parameter also allows selection of a user-defined parameter list for quick commissioning.

At the end of the quick commissioning sequence, set P3900 = 1 to carry out the necessary motor calculations and clear all other parameters (not included in P0010 = 1) to their default settings.

Note
This applies only in Quick Commissioning mode.

Reset to Factory default

To reset all parameters to the factory default settings; the following parameters should be set as follows:

Set P0010 = 30

Set P0970 = 1

Note
The reset process takes approximately 10 seconds to complete.

Seven-segment display

The seven-segment display is structured as follows:

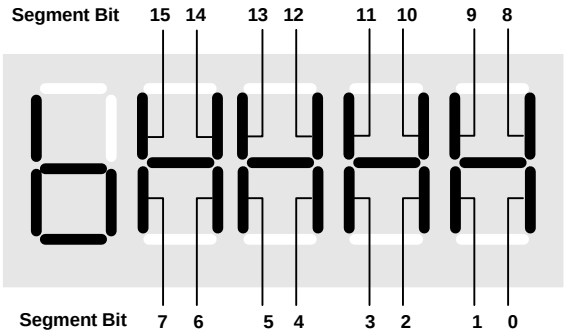

The significance of the relevant bits in the display is described in the status and control word parameters.

2.3 Command and Drive Datasets - Overview

Command Datasets (CDS)

ParNo	Parameter text
P0700[3]	Selection of command source
P0701[3]	Function of digital input 1
P0702[3]	Function of digital input 2
P0703[3]	Function of digital input 3
P0704[3]	Function of digital input 4
P0705[3]	Function of digital input 5
P0706[3]	Function of digital input 6
P0707[3]	Function of digital input 7
P0708[3]	Function of digital input 8
P0719[3]	Selection of cmd. & freq. setp.
P0731[3]	BI: Function of digital output 1
P0732[3]	BI: Function of digital output 2
P0733[3]	BI: Function of digital output 3
P0800[3]	BI: Download parameter set 0
P0801[3]	BI: Download parameter set 1
P0840[3]	BI: ON/OFF1
P0842[3]	BI: ON reverse/OFF1
P0844[3]	BI: 1. OFF2
P0845[3]	BI: 2. OFF2
P0848[3]	BI: 1. OFF3
P0849[3]	BI: 2. OFF3
P0852[3]	BI: Pulse enabling
P1000[3]	Selection of frequency setpoint
P1016[3]	Fixed frequency mode - Bit 0
P1017[3]	Fixed frequency mode - Bit 1
P1018[3]	Fixed frequency mode - Bit 2
P1019[3]	Fixed frequency mode - Bit 3
P1020[3]	BI: Fixed freq. selection Bit 0
P1021[3]	BI: Fixed freq. selection Bit 1
P1022[3]	BI: Fixed freq. selection Bit 2
P1023[3]	BI: Fixed freq. selection Bit 3
P1025[3]	Fixed frequency mode - Bit 4
P1026[3]	BI: Fixed freq. selection Bit 4
P1027[3]	Fixed frequency mode - Bit 5
P1028[3]	BI: Fixed freq. selection Bit 5
P1035[3]	BI: Enable MOP (UP-command)
P1036[3]	BI: Enable MOP (DOWN-command)

ParNo	Parameter text
P1070[3]	CI: Main setpoint
P1071[3]	CI: Main setpoint scaling
P1074[3]	BI: Disable additional setpoint
P1075[3]	CI: Additional setpoint
P1076[3]	CI: Additional setpoint scaling
P1110[3]	BI: Inhibit neg. freq. setpoint
P1113[3]	BI: Reverse
P1140[3]	BI: RFG enable
P1141[3]	BI: RFG start
P1142[3]	BI: RFG enable setpoint
P1230[3]	BI: Enable DC braking
P1266[3]	BI: Bypass command
P1330[3]	CI: Voltage setpoint
P2103[3]	BI: 1. Faults acknowledgement
P2104[3]	BI: 2. Faults acknowledgement
P2106[3]	BI: External fault
P2200[3]	BI: Enable PID controller
P2216[3]	Fixed PID setpoint mode - Bit 0
P2217[3]	Fixed PID setpoint mode - Bit 1
P2218[3]	Fixed PID setpoint mode - Bit 2
P2219[3]	Fixed PID setpoint mode - Bit 3
P2220[3]	BI: Fixed PID setp. select Bit 0
P2221[3]	BI: Fixed PID setp. select Bit 1
P2222[3]	BI: Fixed PID setp. select Bit 2
P2223[3]	BI: Fixed PID setp. select Bit 3
P2225[3]	Fixed PID setpoint mode - Bit 4
P2226[3]	BI: Fixed PID setp. select Bit 4
P2227[3]	Fixed PID setpoint mode - Bit 5
P2228[3]	BI: Fixed PID setp. select Bit 5
P2235[3]	BI: Enable PID-MOP (UP-cmd)
P2236[3]	BI: Enable PID-MOP (DOWN-cmd)
P2253[3]	CI: PID setpoint
P2254[3]	CI: PID trim source
P2264[3]	CI: PID feedback

Drive Datasets (DDS)

ParNo	Parameter text
P0005[3]	Display selection
r0035[3]	CO: Act. motor temperature
P0291[3]	Inverter protection
P0300[3]	Select motor type
P0304[3]	Rated motor voltage
P0305[3]	Rated motor current
P0307[3]	Rated motor power
P0308[3]	Rated motor cosPhi
P0309[3]	Rated motor efficiency
P0310[3]	Rated motor frequency
P0311[3]	Rated motor speed
r0313[3]	Motor pole pairs
P0314[3]	Motor pole pair number
P0320[3]	Motor magnetizing current
r0330[3]	Rated motor slip
r0331[3]	Rated magnetization current
r0332[3]	Rated power factor
r0333[3]	Rated motor torque
P0335[3]	Motor cooling
P0340[3]	Calculation of motor parameters
P0341[3]	Motor inertia [kg*m^2]
P0342[3]	Total/motor inertia ratio
P0344[3]	Motor weight
r0345[3]	Motor start-up time
P0346[3]	Magnetization time
P0347[3]	Demagnetization time
P0350[3]	Stator resistance (line-to-line)
P0352[3]	Cable resistance
P0354[3]	Rotor resistance
P0356[3]	Stator leakage inductance
P0358[3]	Rotor leakage inductance
P0360[3]	Main inductance
P0362[3]	Magnetizing curve flux 1
P0363[3]	Magnetizing curve flux 2
P0364[3]	Magnetizing curve flux 3
P0365[3]	Magnetizing curve flux 4
P0366[3]	Magnetizing curve imag 1
P0367[3]	Magnetizing curve imag 2
P0368[3]	Magnetizing curve imag 3
P0369[3]	Magnetizing curve imag 4

ParNo	Parameter text
r0370[3]	Stator resistance [%]
r0372[3]	Cable resistance [%]
r0373[3]	Rated stator resistance [%]
r0374[3]	Rotor resistance [%]
r0376[3]	Rated rotor resistance [%]
r0377[3]	Total leakage reactance [%]
r0382[3]	Main reactance [%]
r0384[3]	Rotor time constant
r0386[3]	Total leakage time constant
P0400[3]	Select encoder type
P0408[3]	Encoder pulses per revolution
P0491[3]	Reaction on freq. signal loss
P0492[3]	Allowed frequency difference
P0494[3]	Delay frequency loss reaction
P0500[3]	Technological application
P0601[3]	Motor temperature sensor
P0604[3]	Threshold motor temperature
P0610[3]	Motor temperature reaction
P0625[3]	Ambient motor temperature
P0626[3]	Overtemperature stator iron
P0627[3]	Overtemperature stator winding
P0628[3]	Overtemperature rotor winding
r0630[3]	CO: Ambient temperature
r0631[3]	CO: Stator iron temperature
r0632[3]	CO: Stator winding temperature
r0633[3]	CO: Rotor winding temperature
P0640[3]	Motor overload factor [%]
P1001[3]	Fixed frequency 1
P1002[3]	Fixed frequency 2
P1003[3]	Fixed frequency 3
P1004[3]	Fixed frequency 4
P1005[3]	Fixed frequency 5
P1006[3]	Fixed frequency 6
P1007[3]	Fixed frequency 7
P1008[3]	Fixed frequency 8
P1009[3]	Fixed frequency 9
P1010[3]	Fixed frequency 10
P1011[3]	Fixed frequency 11
P1012[3]	Fixed frequency 12
P1013[3]	Fixed frequency 13

ParNo	Parameter text
P1014[3]	Fixed frequency 14
P1015[3]	Fixed frequency 15
P1031[3]	Setpoint memory of the MOP
P1040[3]	Setpoint of the MOP
P1080[3]	Min. frequency
P1082[3]	Max. frequency
P1091[3]	Skip frequency 1
P1092[3]	Skip frequency 2
P1093[3]	Skip frequency 3
P1094[3]	Skip frequency 4
P1101[3]	Skip frequency bandwidth
P1120[3]	Ramp-up time
P1121[3]	Ramp-down time
P1130[3]	Ramp-up initial rounding time
P1131[3]	Ramp-up final rounding time
P1132[3]	Ramp-down initial rounding time
P1133[3]	Ramp-down final rounding time
P1134[3]	Rounding type
P1135[3]	OFF3 ramp-down time
P1202[3]	Motor-current: Flying start
P1203[3]	Search rate: Flying start
P1232[3]	DC braking current
P1233[3]	Duration of DC braking
P1234[3]	DC braking start frequency
P1236[3]	Compound braking current
P1240[3]	Configuration of Vdc controller
P1243[3]	Dynamic factor of Vdc-max
P1250[3]	Gain of Vdc-controller
P1251[3]	Integration time Vdc-controller
P1252[3]	Differential time Vdc-controller
P1253[3]	Vdc-controller output limitation
P1260[3]	Bypass control
P1262[3]	Bypass dead time
P1263[3]	De-Bypass time
P1264[3]	Bypass time
P1265[3]	Bypass frequency
P1300[3]	Control mode
P1310[3]	Continuous boost
P1311[3]	Acceleration boost
P1312[3]	Starting boost
P1316[3]	Boost end frequency
P1320[3]	Programmable V/f freq. coord. 1
P1321[3]	Programmable V/f volt. coord. 1

ParNo	Parameter text
P1322[3]	Programmable V/f freq. coord. 2
P1323[3]	Programmable V/f volt. coord. 2
P1324[3]	Programmable V/f freq. coord. 3
P1325[3]	Programmable V/f volt. coord. 3
P1333[3]	Start frequency for FCC
P1335[3]	Slip compensation
P1336[3]	Slip limit
P1338[3]	Resonance damping gain V/f
P1340[3]	Imax freq. controller prop. gain
P1341[3]	Imax freq. ctrl. integral time
P1345[3]	Imax voltage ctrl. prop. gain
P1346[3]	Imax voltage ctrl. integral time
P1350[3]	Voltage soft start
P1803[3]	Max. modulation
P1820[3]	Reverse output phase sequence
P2000[3]	Reference frequency
P2001[3]	Reference voltage
P2002[3]	Reference current
P2003[3]	Reference torque
P2004[3]	Reference power
P2150[3]	Hysteresis frequency f_hys
P2153[3]	Time-constant frequency filter
P2155[3]	Threshold frequency f_1
P2156[3]	Delay time of threshold freq f_1
P2157[3]	Threshold frequency f_2
P2158[3]	Delay time of threshold freq f_2
P2159[3]	Threshold frequency f_3
P2160[3]	Delay time of threshold freq f_3
P2161[3]	Min. threshold for freq. setp.
P2162[3]	Hysteresis freq. for overfreq.
P2163[3]	Entry freq. for perm. deviation
P2164[3]	Hysteresis frequency deviation
P2165[3]	Delay time permitted deviation
P2166[3]	Delay time ramp up completed
P2167[3]	Switch-off frequency f_off
P2168[3]	Delay time T_off
P2170[3]	Threshold current I_thresh
P2171[3]	Delay time current
P2172[3]	Threshold DC-link voltage
P2173[3]	Delay time DC-link voltage
P2174[3]	Torque threshold M_thresh
P2176[3]	Delay time for torque threshold

ParNo	Parameter text
P2178[3]	Delay time for motor pulled out
P2181[3]	Belt failure detection mode
P2182[3]	Belt threshold frequency 1
P2183[3]	Belt threshold frequency 2
P2184[3]	Belt threshold frequency 3
P2185[3]	Upper torque threshold 1
P2186[3]	Lower torque threshold 1
P2187[3]	Upper torque threshold 2
P2188[3]	Lower torque threshold 2
P2189[3]	Upper torque threshold 3
P2190[3]	Lower torque threshold 3
P2192[3]	Time delay for belt failure
P2201[3]	Fixed PID setpoint 1
P2202[3]	Fixed PID setpoint 2
P2203[3]	Fixed PID setpoint 3
P2204[3]	Fixed PID setpoint 4
P2205[3]	Fixed PID setpoint 5
P2206[3]	Fixed PID setpoint 6
P2207[3]	Fixed PID setpoint 7
P2208[3]	Fixed PID setpoint 8

ParNo	Parameter text
P2209[3]	Fixed PID setpoint 9
P2210[3]	Fixed PID setpoint 10
P2211[3]	Fixed PID setpoint 11
P2212[3]	Fixed PID setpoint 12
P2213[3]	Fixed PID setpoint 13
P2214[3]	Fixed PID setpoint 14
P2215[3]	Fixed PID setpoint 15
P2231[3]	Setpoint memory of PID-MOP
P2240[3]	Setpoint of PID-MOP
P2370[3]	Motor staging stop mode
P2371[3]	Motor staging configuration
P2372[3]	Motor staging cycling
P2373[3]	Motor staging hysteresis
P2374[3]	Motor staging delay
P2375[3]	Motor destaging delay
P2376[3]	Motor staging delay override
P2377[3]	Motor staging lockout timer
P2378[3]	Motor staging frequency f_st [%]

2.4 Binector Input Parameters

ParNo	Parameter text
P0731[3]	BI: Function of digital output 1
P0732[3]	BI: Function of digital output 2
P0733[3]	BI: Function of digital output 3
P0800[3]	BI: Download parameter set 0
P0801[3]	BI: Download parameter set 1
P0810	BI: CDS bit 0 (Local / Remote)
P0811	BI: CDS bit 1
P0820	BI: DDS bit 0
P0821	BI: DDS bit 1
P0840[3]	BI: ON/OFF1
P0842[3]	BI: ON reverse/OFF1
P0844[3]	BI: 1. OFF2
P0845[3]	BI: 2. OFF2
P0848[3]	BI: 1. OFF3
P0849[3]	BI: 2. OFF3
P0852[3]	BI: Pulse enable
P1020[3]	BI: Fixed freq. selection Bit 0
P1021[3]	BI: Fixed freq. selection Bit 1
P1022[3]	BI: Fixed freq. selection Bit 2
P1023[3]	BI: Fixed freq. selection Bit 3
P1026[3]	BI: Fixed freq. selection Bit 4
P1028[3]	BI: Fixed freq. selection Bit 5
P1035[3]	BI: Enable MOP (UP-command)
P1036[3]	BI: Enable MOP (DOWN-command)
P1074[3]	BI: Disable additional setpoint
P1110[3]	BI: Inhibit neg. freq. setpoint
P1113[3]	BI: Reverse
P1140[3]	BI: RFG enable
P1141[3]	BI: RFG start
P1142[3]	BI: RFG enable setpoint
P1230[3]	BI: Enable DC braking
P1266[3]	BI: Bypass command
P2103[3]	BI: 1. Faults acknowledgement

ParNo	Parameter text
P2104[3]	BI: 2. Faults acknowledgement
P2106[3]	BI: External fault
P2200[3]	BI: Enable PID controller
P2220[3]	BI: Fixed PID setp. select Bit 0
P2221[3]	BI: Fixed PID setp. select Bit 1
P2222[3]	BI: Fixed PID setp. select Bit 2
P2223[3]	BI: Fixed PID setp. select Bit 3
P2226[3]	BI: Fixed PID setp. select Bit 4
P2228[3]	BI: Fixed PID setp. select Bit 5
P2235[3]	BI: Enable PID-MOP (UP-cmd)
P2236[3]	BI: Enable PID-MOP (DOWN-cmd)
P2810[2]	BI: AND 1
P2812[2]	BI: AND 2
P2814[2]	BI: AND 3
P2816[2]	BI: OR 1
P2818[2]	BI: OR 2
P2820[2]	BI: OR 3
P2822[2]	BI: XOR 1
P2824[2]	BI: XOR 2
P2826[2]	BI: XOR 3
P2828	BI: NOT 1
P2830	BI: NOT 2
P2832	BI: NOT 3
P2834[4]	BI: D-FF 1
P2837[4]	BI: D-FF 2
P2840[2]	BI: RS-FF 1
P2843[2]	BI: RS-FF 2
P2846[2]	BI: RS-FF 3
P2849	BI: Timer 1
P2854	BI: Timer 2
P2859	BI: Timer 3
P2864	BI: Timer 4

2.5 Connector Input Parameters

ParNo	Parameter text
P0095[10]	CI: Display PZD signals
P0771[2]	CI: DAC
P1070[3]	CI: Main setpoint
P1071[3]	CI: Main setpoint scaling
P1075[3]	CI: Additional setpoint
P1076[3]	CI: Additional setpoint scaling
P1330[3]	CI: Voltage setpoint
P2016[8]	CI: PZD to BOP link (USS)
P2019[8]	CI: PZD to COM link (USS)
P2051[8]	CI: PZD to CB

ParNo	Parameter text
P2253[3]	CI: PID setpoint
P2254[3]	CI: PID trim source
P2264[3]	CI: PID feedback
P2869[2]	CI: ADD 1
P2871[2]	CI: ADD 2
P2873[2]	CI: SUB 1
P2875[2]	CI: SUB 2
P2877[2]	CI: MUL 1
P2879[2]	CI: MUL 2
P2881[2]	CI: DIV 1
P2883[2]	CI: DIV 2
P2885[2]	CI: CMP 1
P2887[2]	CI: CMP 2

2.6 Binector Output Parameters

ParNo	Parameter text
r1261	BO: Bypass status word
r2032	BO: CtrlWrd1 from BOP link (USS)
r2033	BO: CtrlWrd2 from BOP link (USS)
r2036	BO: CtrlWrd1 from COM link (USS)
r2037	BO: CtrlWrd2 from COM link (USS)
r2090	BO: Control word 1 from CB
r2091	BO: Control word 2 from CB
r2811	BO: AND 1
r2813	BO: AND 2
r2815	BO: AND 3
r2817	BO: OR 1
r2819	BO: OR 2
r2821	BO: OR 3
r2823	BO: XOR 1
r2825	BO: XOR 2
r2827	BO: XOR 3
r2829	BO: NOT 1
r2831	BO: NOT 2
r2833	BO: NOT 3
r2835	BO: Q D-FF 1

ParNo	Parameter text
r2836	BO: NOT-Q D-FF 1
r2838	BO: Q D-FF 2
r2839	BO: NOT-Q D-FF 2
r2841	BO: Q RS-FF 1
r2842	BO: NOT-Q RS-FF 1
r2844	BO: Q RS-FF 2
r2845	BO: NOT-Q RS-FF 2
r2847	BO: Q RS-FF 3
r2848	BO: NOT-Q RS-FF 3
r2852	BO: Timer 1
r2853	BO: Nout timer 1
r2857	BO: Timer 2
r2858	BO: Nout timer 2
r2862	BO: Timer 3
r2863	BO: Nout timer 3
r2867	BO: Timer 4
r2868	BO: Nout timer 4
r2886	BO: CMP 1
r2888	BO: CMP 2

2.7 Connector Output Parameters

ParNo	Parameter text
r0020	CO: Freq. setpoint before RFG
r0021	CO: Act. filtered frequency
r0024	CO: Act. filtered output freq.
r0025	CO: Act. filtered output voltage
r0026	CO: Act. filtered DC-link volt.
r0027	CO: Act. filtered output current
r0031	CO: Act. filtered torque
r0032	CO: Act. filtered power
r0035[3]	CO: Act. motor temperature
r0037[5]	CO: Inverter temperature [°C]
r0038	CO: Act. power factor
r0039	CO: Energy consumpt. meter [kWh]
r0050	CO: Active command data set
r0051[2]	CO: Active drive data set (DDS)
r0061	CO: Act. encoder frequency
r0063	CO: Act. frequency
r0065	CO: Slip frequency
r0067	CO: Act. output current limit
r0068	CO: Output current
r0071	CO: Max. output voltage
r0080	CO: Act. torque
r0086	CO: Act. active current
r0395	CO: Total stator resistance [%]
r0396	CO: Act. rotor resistance
r0755[2]	CO: Act. ADC after scal. [4000h]
r0947[8]	CO: Last fault code
r0948[12]	CO: Fault time
r0949[8]	CO: Fault value
r1024	CO: Act. fixed frequency
r1050	CO: Act. Output freq. of the MOP

ParNo	Parameter text
r1078	CO: Total frequency setpoint
r1114	CO: Freq. setp. after dir. ctrl.
r1119	CO: Freq. setpoint before RFG
r1170	CO: Frequency setpoint after RFG
r1242	CO: Switch-on level of Vdc-max
r1337	CO: V/f slip frequency
r1343	CO: Imax controller freq. output
r1344	CO: Imax controller volt. output
r1801	CO: Act. pulse frequency
r2015[8]	CO: PZD from BOP link (USS)
r2018[8]	CO: PZD from COM link (USS)
r2050[8]	CO: PZD from CB
r2110[4]	CO: Warning number
r2169	CO: Act. filtered frequency
r2224	CO: Act. fixed PID setpoint
r2250	CO: Output setpoint of PID-MOP
r2260	CO: PID setpoint after PID-RFG
r2262	CO: Filtered PID setp. after RFG
r2266	CO: PID filtered feedback
r2272	CO: PID scaled feedback
r2273	CO: PID error
r2294	CO: Act. PID output
r2870	CO: ADD 1
r2872	CO: ADD 2
r2874	CO: SUB 1
r2876	CO: SUB 2
r2878	CO: MUL 1
r2880	CO: MUL 2
r2882	CO: DIV 1
r2884	CO: DIV 2
P2889	CO: Fixed setpoint 1 in [%]
P2890	CO: Fixed setpoint 2 in [%]

2.8 Connector/Binector Output Parameters

ParNo	Parameter text
r0019	CO/BO: BOP control word
r0052	CO/BO: Act. status word 1
r0053	CO/BO: Act. status word 2
r0054	CO/BO: Act. control word 1
r0055	CO/BO: Act. control word 2
r0056	CO/BO: Status of motor control
r0403	CO/BO: Encoder status word
P0718	CO/BO: Hand / Auto
r0722	CO/BO: Binary input values
r0747	CO/BO: State of digital outputs

ParNo	Parameter text
r0751	CO/BO: Status word of ADC
r0785	CO/BO: Status word of DAC
r1204	CO/BO: Status word:Flying start
r2197	CO/BO: Monitoring word 1
r2198	CO/BO: Monitoring word 2
r2379	CO/BO: Motor staging status word

3 Parameter Description

Note

Level 4 Parameters are not visible with BOP-2. They are only for service purposes.

3.1 Common parameters

r0000	**Drive display**			**Min:**	-	Level
		Datatype: U16	**Unit:** -	**Def:**	-	**1**
	P-Group: ALWAYS			**Max:**	-	

Displays the user selected output as defined in P0005.

Note:

Pressing the "Fn" button for 2 seconds allows the user to view the values of DC link voltage, output frequency, output voltage, output current, and chosen r0000 setting (defined in P0005).

r0002	**Drive state**			**Min:**	-	Level
		Datatype: U16	**Unit:** -	**Def:**	-	**3**
	P-Group: COMMANDS			**Max:**	-	

Displays actual drive state.

Possible Settings:

0 Commissioning mode (P0010 != 0)
1 Drive ready
2 Drive fault active
3 Drive starting (DC-link precharging)
4 Drive running
5 Stopping (ramping down)

Dependency:

State 3 visible only while precharging DC link, and when externally powered communications board is fitted.

P0003	**User access level**			**Min:**	0	Level
	CStat: CUT	**Datatype:** U16	**Unit:** -	**Def:**	1	**1**
	P-Group: ALWAYS	**Active:** first confirm	**QuickComm.:** No	**Max:**	4	

Defines user access level to parameter sets. The default setting (standard) is sufficient for most simple applications.

Possible Settings:

0 User defined parameter list - see P0013 for details on use
1 Standard: Allows access into most frequently used parameters.
2 Extended: Allows extended access e.g. to inverter I/O functions.
3 Expert: For expert use only.
4 Service: Only for use by authorized service personal - password protected.

P0004	**Parameter filter**			**Min:**	0	Level
	CStat: CUT	**Datatype:** U16	**Unit:** -	**Def:**	0	**1**
	P-Group: ALWAYS	**Active:** first confirm	**QuickComm.:** No	**Max:**	22	

Filters available parameters according to functionality to enable a more focussed approach to commissioning.

Possible Settings:

0 All parameters
2 Inverter
3 Motor
4 Speed sensor
5 Technol. application / units
7 Commands, binary I/O
8 ADC and DAC
10 Setpoint channel / RFG
12 Drive features
13 Motor control
20 Communication
21 Alarms / warnings / monitoring
22 Technology controller (e.g. PID)

Example:

P0004 = 22 specifies that only PID parameters will be visible.

Dependency:

The parameters are sub-divided into groups (P-Group) according to their functionality. This increases the transparency and allows a parameter to be quickly searched for. Furthermore, parameter P0004 can be used to control the ability to be visualized for the operator panel.

Value	P-Group	Group	Parameter area
0	ALWAYS	All parameters	
2	INVERTER	Drive inverter parameters	0200 0299
3	MOTOR	Motor parameters	0300 ... 0399 + 0600 0699
4	ENCODER	Speed encoder	0400 0499
5	TECH_APL	Technical applications / units	0500 0599
7	COMMANDS	Control commands, digital I/O	0700 .... 0749 + 0800 ... 0899
8	TERMINAL	Analog inputs/outputs	0750 0799
10	SETPOINT	Setpoint channel and ramp-function gen.	1000 1199
12	FUNC	Drive inverter functions	1200 1299
13	CONTROL	Motor open-loop/closed-loop control	1300 1799
20	COMM	Communications	2000 2099
21	ALARMS	Faults, warnings, monitoring functions	2100 2199
22	TECH	Technological controller (PID controller)	2200 2399

Parameters marked "Quick Comm: Yes" in the parameter header can only be set when P0010 = 1 (Quick Commissioning).

P0005[3] Display selection

						Level
CStat:	CUT	**Datatype:** U16	**Unit:** -	**Min:**	2	2
P-Group:	FUNC	**Active:** first confirm	**QuickComm.:** No	**Def:**	21	
				Max:	4000	

Selects display for parameter r0000 (drive display).

Index:

P0005[0] : 1st. Drive data set (DDS)
P0005[1] : 2nd. Drive data set (DDS)
P0005[2] : 3rd. Drive data set (DDS)

Common Settings:

21 Actual frequency
25 Output voltage
26 DC link voltage
27 Output current

Notice:

These settings refer to read only parameter numbers ("rxxxx").

Details:

See relevant "rxxxx" parameter descriptions.

P0006 Display mode

						Level
CStat:	CUT	**Datatype:** U16	**Unit:** -	**Min:**	0	3
P-Group:	FUNC	**Active:** first confirm	**QuickComm.:** No	**Def:**	2	
				Max:	4	

Defines mode of display for r0000 (drive display).

Possible Settings:

0 In Ready state alternate between setpoint and output frequency. In run display output frequency
1 In Ready state display setpoint. In run display output frequency.
2 In Ready state alternate between P0005 value and r0020 value. In run display P0005 value
3 In Ready state alternate between r0002 value and r0020 value. In run display r0002 value
4 In all states just display P0005

Note:

- When inverter is not running, the display alternates between the values for "Not Running" and "Running".
- Per default, the setpoint and actual frequency values are displayed alternately.

P0007 Backlight delay time

						Level
CStat:	CUT	**Datatype:** U16	**Unit:** -	**Min:**	0	3
P-Group:	FUNC	**Active:** first confirm	**QuickComm.:** No	**Def:**	0	
				Max:	2000	

Defines time period after which the backlight display turns off if no operator keys have been pressed.

Value:

P0007 = 0:
Backlight always on (default state).

P0007 = 1 - 2000:
Number of seconds after which the backlight will turn off.

P0010	**Commissioning parameter**			**Min:** 0	Level
	CStat: CT	**Datatype:** U16	**Unit:** -	**Def:** 0	**1**
	P-Group: ALWAYS	**Active:** first confirm	**QuickComm.:** No	**Max:** 30	

Filters parameters so that only those related to a particular functional group are selected.

Possible Settings:

0 Ready
1 Quick commissioning
2 Inverter
29 Download
30 Factory setting

Dependency:

- Reset to 0 for inverter to run.
- P0003 (user access level) also determines access to parameters.

Note:

P0010 = 1
The inverter can be commissioned very quickly and easily by setting P0010 = 1. After that only the important parameters (e.g.: P0304, P0305, etc.) are visible. The value of these parameters must be entered one after the other. The end of quick commissioning and the start of internal calculation will be done by setting P3900 = 1 - 3. Afterward parameter P0010 and P3900 will be reset to zero automatically.

P0010 = 2
For service purposes only.

P0010 = 29
To transfer a parameter file via PC tool (e.g.: DriveMonitor, STARTER) parameter P0010 will be set to 29 by the PC tool. When download has been finished PC tool resets parameter P0010 to zero.

P0010 = 30
When resetting the parameters of inverter P0010 must be set to 30. Resetting of the parameters will be started by setting parameter P0970 = 1. The inverter will automatically reset all its parameters to their default settings. This can prove beneficial if you experience problems during parameter setup and wish to start again. Duration of factory setting will take about 60 s.

P0011	**Lock for user defined parameter**			**Min:** 0	Level
	CStat: CUT	**Datatype:** U16	**Unit:** -	**Def:** 0	**3**
	P-Group: FUNC	**Active:** first confirm	**QuickComm.:** No	**Max:** 65535	

Details:

See parameter P0013 (user defined parameter)

P0012	**Key for user defined parameter**			**Min:** 0	Level
	CStat: CUT	**Datatype:** U16	**Unit:** -	**Def:** 0	**3**
	P-Group: FUNC	**Active:** first confirm	**QuickComm.:** No	**Max:** 65535	

Details:

See parameter P0013 (user defined parameter).

P0013[20]	**User defined parameter**			**Min:** 0	Level
	CStat: CUT	**Datatype:** U16	**Unit:** -	**Def:** 0	**3**
	P-Group: FUNC	**Active:** first confirm	**QuickComm.:** No	**Max:** 65535	

Defines a limited set of parameters to which the end user will have access.

Instructions for use:

1. Set P0003 = 3 (expert user)
2. Go to P0013 indices 0 to 16 (user list)
3. Enter into P0013 index 0 to 16 the parameters required to be visible in the user-defined list. The following values are fixed and cannot be changed:
   - P0013 index 19 = 12 (key for user defined parameter)
   - P0013 index 18 = 10 (commissioning parameter filter)
   - P0013 index 17 = 3 (user access level)
4. Set P0003 = 0 to activate the user defined parameter.

Index:

P0013[0] : 1st user parameter
P0013[1] : 2nd user parameter
P0013[2] : 3rd user parameter
P0013[3] : 4th user parameter
P0013[4] : 5th user parameter
P0013[5] : 6th user parameter
P0013[6] : 7th user parameter
P0013[7] : 8th user parameter
P0013[8] : 9th user parameter
P0013[9] : 10th user parameter
P0013[10] : 11th user parameter
P0013[11] : 12th user parameter
P0013[12] : 13th user parameter
P0013[13] : 14th user parameter
P0013[14] : 15th user parameter
P0013[15] : 16th user parameter
P0013[16] : 17th user parameter
P0013[17] : 18th user parameter
P0013[18] : 19th user parameter
P0013[19] : 20th user parameter

Dependency:

First, set P0011 ("lock") to a different value than P0012 ("key") to prevent changes to user-defined parameter. Then, set P0003 to 0 to activate the user-defined list.

When locked and the user-defined parameter is activated, the only way to exit the user-defined parameter (and view other parameters) is to set P0012 ("key") to the value in P0011 ("lock").

Note:

- Alternatively, set P0010 = 30 (commissioning parameter filter = factory setting) and P0970 = 1 (factory reset) to perform a complete factory reset.
- The default values of P0011 ("lock") and P0012 ("key") are the same.

P0014[3] Store mode

						Level
CStat: UT	**Datatype:** U16	**Unit:** -	**Min:** 0			3
P-Group: -	**Active:** first confirm	**QuickComm.:** No	**Def:** 0	**Max:** 1		

Sets the store mode for parameters ("volatile" (RAM) or "nonvolatile" (EEPROM)).

Possible Settings:

0 Volatile (RAM)
1 Nonvolatile (EEPROM)

Index:

P0014[0] : Serial interface COM link
P0014[1] : Serial interface BOP link
P0014[2] : PROFIBUS / CB

Note:

1. With the BOP the parameter will always be stored in the EEPROM.
2. P0014 itself will always be stored in the EEPROM.
3. P0014 will not be changed by performing a factory reset (P0010 = 30 and P0971 = 1).
4. P0014 can be transferred during a DOWNLOAD (P0010 = 29).
5. If "Store request via USS/CB = volatile (RAM)" and "P0014[x] = volatile (RAM)", you can make a transfer of all parameter values into the nonvolatile memory via P0971.
6. If "Store request via USS/CB" and P0014[x] are not consistent, the setting of P14[x] = "store nonvolatile (EEPROM)" has always higher priority.

Store request via USS/CB	Value of P0014[x]	Result
EEPROM	RAM	EEPROM
EEPROM	EEPROM	EEPROM
RAM	RAM	RAM
RAM	EEPROM	EEPROM

3.2 Diagnosis parameters

r0018	**Firmware version**	**Datatype:** Float	**Unit:** -	**Min:** - **Def:** - **Max:** -	Level **3**
	P-Group: INVERTER				

Displays version number of installed firmware.

r0019	**CO/BO: BOP control word**	**Datatype:** U16	**Unit:** -	**Min:** - **Def:** - **Max:** -	Level **3**
	P-Group: COMMANDS				

Displays status of operator panel commands.

The settings below are used as the "source" codes for keypad control when connecting to BICO input parameters.

Bitfields:

Bit00	ON/OFF1	0	NO	1	YES
Bit01	OFF2: Electrical stop	0	YES	1	NO
Bit08	reserved				
Bit11	reserved				
Bit12	Hand Operation	0	NO	1	YES
Bit13	Motor potentiometer MOP up	0	NO	1	YES
Bit14	Motor potentiometer MOP down	0	NO	1	YES
Bit15	Auto Operation	0	NO	1	YES

Note:

When BICO technology is used to allocate functions to panel buttons, this parameter displays the actual status of the relevant command.

The following functions can be "connected" to individual buttons:
- ON/OFF1,
- OFF2,
- INCREASE,
- DECREASE

r0020	**CO: Freq. setpoint before RFG**	**Datatype:** Float	**Unit:** Hz	**Min:** - **Def:** - **Max:** -	Level **3**
	P-Group: CONTROL				

Displays actual frequency setpoint (input from ramp function generator).

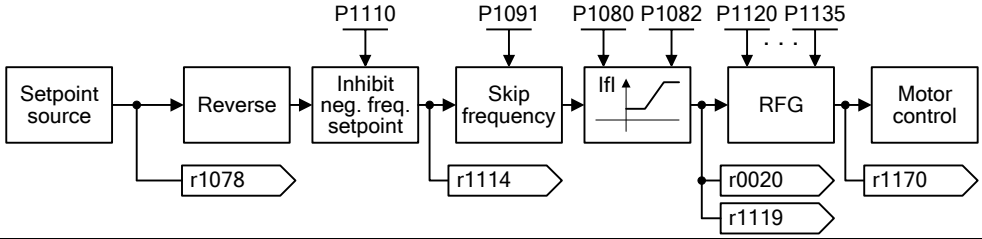

r0021	**CO: Act. filtered frequency 1**	**Datatype:** Float	**Unit:** Hz	**Min:** - **Def:** - **Max:** -	Level **3**
	P-Group: CONTROL				

Displays actual inverter output frequency (r0021) excluding slip compensation, resonance damping and frequency limitation.

r0022	**Act. filtered rotor speed**	**Datatype:** Float	**Unit:** 1/min	**Min:** - **Def:** - **Max:** -	Level **3**
	P-Group: CONTROL				

Displays calculated rotor speed based on inverter output frequency [Hz] x 120 / number of poles.

$$r0022\,[1/min] = r0021[Hz] \cdot \frac{60}{r0313}$$

Note:

This calculation makes no allowance for load-dependent slip.

r0024	**CO: Act. filtered output freq.**	**Datatype:** Float **Unit:** Hz	**Min:** - **Def:** - **Max:** -	Level **3**
	P-Group: CONTROL			

Displays actual output frequency. Slip compensation, resonance damping and frequency limitation are included.

r0025	**CO: Act. filtered output voltage**	**Datatype:** Float **Unit:** V	**Min:** - **Def:** - **Max:** -	Level **3**
	P-Group: CONTROL			

Displays [rms] voltage applied to motor.

r0026	**CO: Act. filtered DC-link volt.**	**Datatype:** Float **Unit:** V	**Min:** - **Def:** - **Max:** -	Level **3**
	P-Group: INVERTER			

Displays DC-link voltage.

		Mains 380 - 480 V
$U_{DC\_max\_trip}$	F0002	FSC 840 V all others 820 V
$U_{DC\_min\_trip}$	F0003	360 V
$U_{DC\_max\_warn}$ $U_{DC\_max\_ctrl}$	A0502 (P1240)	r1242
U_{DC_Comp}	(P1236)	$0.98 \cdot$ r1242

r0027	**CO: Act. filtered output current**	**Datatype:** Float **Unit:** A	**Min:** - **Def:** - **Max:** -	Level **3**
	P-Group: CONTROL			

Displays [rms] value of motor current [A].

r0031	**CO: Act. filtered torque**	**Datatype:** Float **Unit:** Nm	**Min:** - **Def:** - **Max:** -	Level **3**
	P-Group: CONTROL			

Displays electrical torque.

$$m_M = \frac{3}{2} \cdot \frac{L_m}{L_R} \cdot Z_p \cdot \Psi_{rd} \cdot i_{sq}$$

Valid for V/f-caracteristic:

$$i_{sq} \approx \frac{u \cdot |i_s| \cdot \cos\varphi - R_s^2 \cdot |i_s|}{e}$$

m_M : Motor torque
Z_p : Pole pair number
Ψ_{rd} : Rotor flux
L_R : Rotor inductance
L_m : Magnetizing inductance
i_{sq} : Torque-generating current
e : Motor counter EMF

Output value will be zero at low speeds when the current injection is active (r1751.5 = 1).

Note:

The electrical torque is not the same as the mechanical torque, which can be measured on the shaft. Due to windage and friction a part of the electrical torque is lost in the motor.

r0032	**CO: Act. filtered power**	**Datatype:** Float **Unit:** -	**Min:** - **Def:** - **Max:** -	Level **3**
	P-Group: CONTROL			

Displays motor power (power output at the motor shaft).

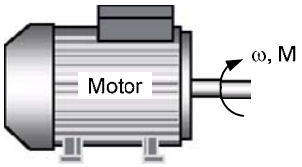

$$P_{mech} = \omega \cdot M = 2 \cdot \pi \cdot f \cdot M$$

$$\Rightarrow$$

$$r0032\,[kW] = \frac{1}{1000} \cdot 2 \cdot \pi \cdot \frac{r0022}{60}\,[1/min] \cdot r0031\,[Nm]$$

$$r0032\,[hp] = 0.75 \cdot r0032\,[kW]$$

Dependency:

Value is displayed in [kW] or [hp] depending on setting for P0100 (operation for Europe / North America).

r0035[3]	**CO: Act. motor temperature**		**Min:** -		Level
		Datatype: Float	**Unit:** °C	**Def:** -	**3**
	P-Group: MOTOR			**Max:** -	

Displays measured motor temperature.

Index:

r0035[0] : 1st. Drive data set (DDS)
r0035[1] : 2nd. Drive data set (DDS)
r0035[2] : 3rd. Drive data set (DDS)

r0037[5]	**CO: Inverter temperature [°C]**		**Min:** -		Level
		Datatype: Float	**Unit:** °C	**Def:** -	**3**
	P-Group: INVERTER			**Max:** -	

Displays measured heatsink temperature and calculated junction temperature of IGBTs based on thermal model.

Index:

r0037[0] : Measured heat sink temperature
r0037[1] : Chip temperature
r0037[2] : Rectifier temperature
r0037[3] : Inverter ambient temperature
r0037[4] : Control board temperature

r0038	**CO: Act. power factor**		**Min:** -		Level
		Datatype: Float	**Unit:** -	**Def:** -	**3**
	P-Group: CONTROL			**Max:** -	

Displays actual power factor.

Dependency:

Applies when V/f control is selected in P1300 (control mode); otherwise, the display shows the value 1.

r0039	**CO: Energy consumpt. meter [kWh]**		**Min:** -		Level
		Datatype: Float	**Unit:** kWh	**Def:** -	**3**
	P-Group: INVERTER			**Max:** -	

Displays electrical energy used by inverter since display was last reset (see P0040 - reset energy consumption meter).

$$r0039 = \int_0^{t_{act}} P_W \cdot dt = \int_0^{t_{act}} \sqrt{3} \cdot u \cdot i \cdot \cos\varphi \cdot dt$$

Dependency:

Value is reset when P0040 = 1 (reset energy consumption meter).

P0040	**Reset energy consumption meter**			**Min:** 0	Level
	CStat: CT	**Datatype:** U16	**Unit:** -	**Def:** 0	**3**
	P-Group: INVERTER	**Active:** first confirm	**QuickComm.:** No	**Max:** 1	

Resets value of parameter r0039 (energy consumption meter) to zero.

Possible Settings:

0 No reset
1 Reset r0039 to 0

Dependency:

No reset until "P" is pressed.

r0050	**CO: Active command data set**		**Min:** -		Level
		Datatype: U16	**Unit:** -	**Def:** -	**2**
	P-Group: COMMANDS			**Max:** -	

Displays currently selected and active command data set (CDS).

Possible Settings:

0 1st. Command data set (CDS)
1 2nd. Command data set (CDS)
2 3rd. Command data set (CDS)

Details:

See parameter P0810.

r0051[2]	**CO: Active drive data set (DDS)**		**Min:** -		Level
		Datatype: U16	**Unit:** -	**Def:** -	**2**
	P-Group: COMMANDS			**Max:** -	

Displays currently selected and active drive data set (DDS).

Index:

r0051[0] : Selected drive data set
r0051[1] : Active drive data set

Details:

See parameter P0820.

r0052	**CO/BO: Act. status word 1**			**Min:** -	Level
		Datatype: U16	**Unit:** -	**Def:** -	**2**
	P-Group: COMMANDS			**Max:** -	

Displays first active status word of inverter (bit format) and can be used to diagnose inverter status.

Bitfields:

Bit00	Drive ready	0	NO	1	YES
Bit01	Drive ready to run	0	NO	1	YES
Bit02	Drive running	0	NO	1	YES
Bit03	Drive fault active	0	NO	1	YES
Bit04	OFF2 active	0	YES	1	NO
Bit05	OFF3 active	0	YES	1	NO
Bit06	ON inhibit active	0	NO	1	YES
Bit07	Drive warning active	0	NO	1	YES
Bit08	Deviation setpoint / act. value	0	YES	1	NO
Bit09	PZD control	0	NO	1	YES
Bit10	Maximum frequency reached	0	NO	1	YES
Bit11	Warning: Motor current limit	0	YES	1	NO
Bit12	Motor holding brake active	0	NO	1	YES
Bit13	Motor overload	0	YES	1	NO
Bit14	Motor runs right	0	NO	1	YES
Bit15	Inverter overload	0	YES	1	NO

Dependency:

r0052 Bit00 - Bit02:
State-sequence diagram after Power On or ON/OFF1 respectively: ==> see below

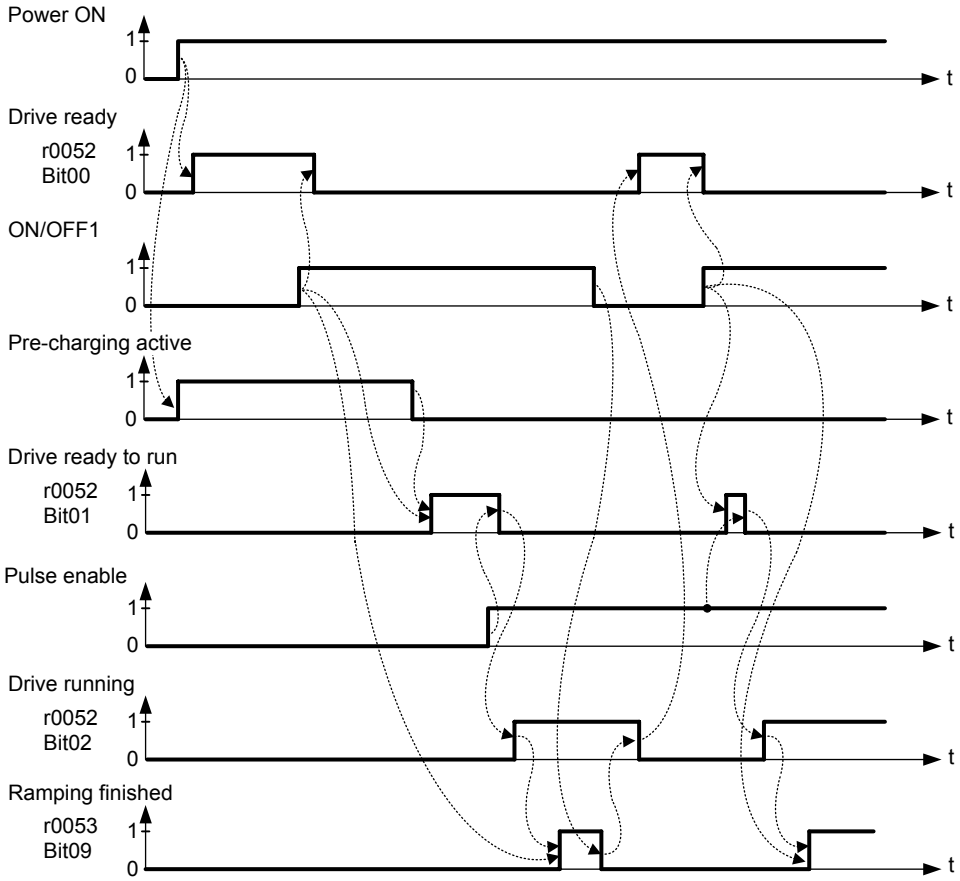

r0052 Bit03 "Drive fault active":
Output of Bit3 (Fault) will be inverted on digital output (Low = Fault, High = No Fault).

r0052 Bit08 "Deviation setpoint / act. value" ==> see parameter P2164

r0052 Bit10 "f_act >= P1082 (f_max)" ==> see parameter P1082

r0052 Bit12 "Motor holding brake active" ==> see parameter P1215

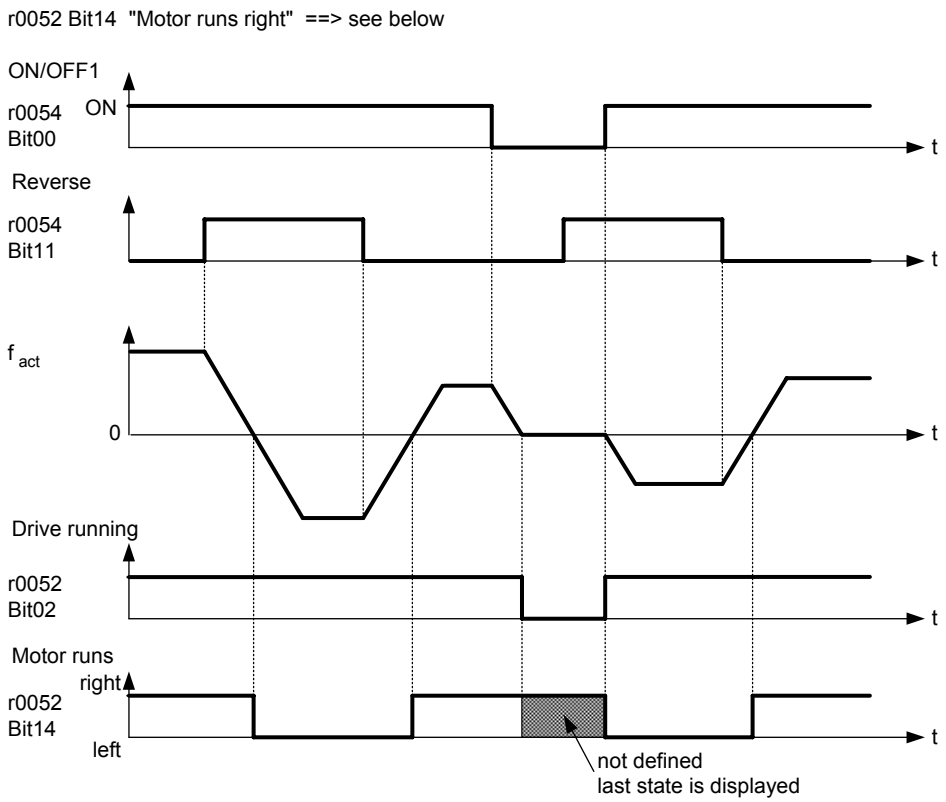

Details:

The 7-segment display of the bit-parameters (binary parameters) is explained in the Introduction of the Parameter List.

r0053	**CO/BO: Act. status word 2**	**Datatype:** U16	**Unit:** -	**Min:** -	Level
				Def: -	**2**
	P-Group: COMMANDS			**Max:** -	

Displays second status word of inverter (in bit format).

Bitfields:

Bit00	DC brake active	0	NO	1	YES
Bit01	f_act > P2167 (f_off)	0	NO	1	YES
Bit02	f_act <= P1080 (f_min)	0	NO	1	YES
Bit03	Act. current r0068 > P2170	0	NO	1	YES
Bit04	f_act > P2155 (f_1)	0	NO	1	YES
Bit05	f_act <= P2155 (f_1)	0	NO	1	YES
Bit06	f_act >= setpoint	0	NO	1	YES
Bit07	Act. Vdc r0070 < P2172	0	NO	1	YES
Bit08	Act. Vdc r0070 > P2172	0	NO	1	YES
Bit09	Ramping finished	0	NO	1	YES
Bit10	PID output r2294 == P2292 (PID_min)	0	NO	1	YES
Bit11	PID output r2294 == P2291 (PID_max)	0	NO	1	YES
Bit14	reserved	0	NO	1	YES
Bit15	reserved	0	NO	1	YES

Note:

- r0053 Bit00 ==> see parameter P1233
- r0053 Bit01 ==> see parameter P2167
- r0053 Bit02 ==> see parameter P1080
- r0053 Bit03 ==> see parameter P2170
- r0053 Bit04 ==> see parameter P2155
- r0053 Bit05 ==> see parameter P2155
- r0053 Bit06 ==> see parameter P2150
- r0053 Bit07 ==> see parameter P2172
- r0053 Bit08 ==> see parameter P2172

r0053 Bit09 "Ramping finished" ==> see below

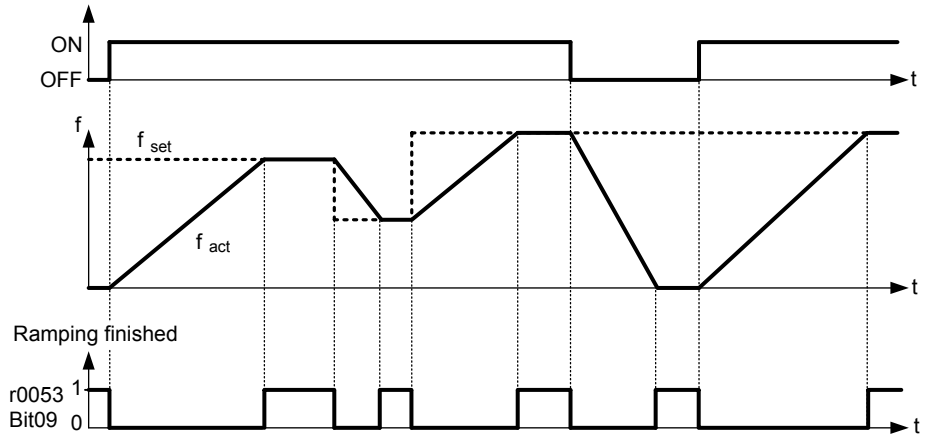

Details:

See description of seven-segment display given in the "Introduction to MICROMASTER System Parameters" in this manual.

r0054	**CO/BO: Act. control word 1**			**Min:** -	Level
		Datatype: U16	**Unit:** -	**Def:** -	**3**
	P-Group: COMMANDS			**Max:** -	

Displays first control word of inverter and can be used to diagnose which commands are active.

Bitfields:

Bit00	ON/OFF1	0	NO	1	YES
Bit01	OFF2: Electrical stop	0	YES	1	NO
Bit02	OFF3: Fast stop	0	YES	1	NO
Bit03	Pulses enabled	0	NO	1	YES
Bit04	RFG enable	0	NO	1	YES
Bit05	RFG start	0	NO	1	YES
Bit06	Setpoint enable	0	NO	1	YES
Bit07	Fault acknowledge	0	NO	1	YES
Bit08	reserved				
Bit09	reserved				
Bit10	Control from PLC	0	NO	1	YES
Bit11	Reverse (setpoint inversion)	0	NO	1	YES
Bit13	Motor potentiometer MOP up	0	NO	1	YES
Bit14	Motor potentiometer MOP down	0	NO	1	YES
Bit15	CDS Bit 0 (Local/Remote)	0	NO	1	YES

Details:

See description of seven-segment display given in the "Introduction to MICROMASTER System Parameters" in this manual.

r0055	**CO/BO: Act. control word 2**			**Min:** -	Level
		Datatype: U16	**Unit:** -	**Def:** -	**3**
	P-Group: COMMANDS			**Max:** -	

Displays additional control word of inverter and can be used to diagnose which commands are active.

Bitfields:

Bit00	Fixed frequency Bit 0	0	NO	1	YES
Bit01	Fixed frequency Bit 1	0	NO	1	YES
Bit02	Fixed frequency Bit 2	0	NO	1	YES
Bit03	Fixed frequency Bit 3	0	NO	1	YES
Bit04	Drive data set (DDS) Bit 0	0	NO	1	YES
Bit05	Drive data set (DDS) Bit 1	0	NO	1	YES
Bit08	PID enabled	0	NO	1	YES
Bit09	DC brake enabled	0	NO	1	YES
Bit11	reserved				
Bit12	reserved				
Bit13	External fault 1	0	YES	1	NO
Bit15	Command data set (CDS) Bit 1	0	NO	1	YES

Details:

See description of seven-segment display given in the "Introduction to MICROMASTER System Parameters" in this handbook.

r0056	**CO/BO: Status of motor control**			**Min:** -	Level
		Datatype: U16	**Unit:** -	**Def:** -	**3**
	P-Group: CONTROL			**Max:** -	

Displays status of motor control, which can be used to diagnose inverter status.

Bitfields:

Bit00	Init. control finished	0	NO	1	YES
Bit01	Motor demagnetizing finished	0	NO	1	YES
Bit02	Pulses enabled	0	NO	1	YES
Bit03	Voltage soft start selected	0	NO	1	YES
Bit04	Motor excitation finished	0	NO	1	YES
Bit05	Starting boost active	0	NO	1	YES
Bit06	Acceleration boost active	0	NO	1	YES
Bit07	Frequency is negative	0	NO	1	YES
Bit08	Field weakening active	0	NO	1	YES
Bit09	Volts setpoint limited	0	NO	1	YES
Bit10	Slip frequency limited	0	NO	1	YES
Bit11	F_out > F_max Freq. limited	0	NO	1	YES
Bit12	Phase reversal selected	0	NO	1	YES
Bit13	I-max controller active	0	NO	1	YES
Bit14	Vdc-max controller active	0	NO	1	YES
Bit15	reserved				

Details:

See description of seven-segment display given in the introduction.

r0061	**CO: Act. encoder frequency**			**Min:** -	Level
		Datatype: Float	**Unit:** Hz	**Def:** -	**3**
	P-Group: CONTROL			**Max:** -	

Displays actual frequency detected by encoder.

r0063	**CO: Act. frequency**			**Min:** -	Level
		Datatype: Float	**Unit:** Hz	**Def:** -	**3**
	P-Group: CONTROL			**Max:** -	

Displays actual unfiltered frequency.

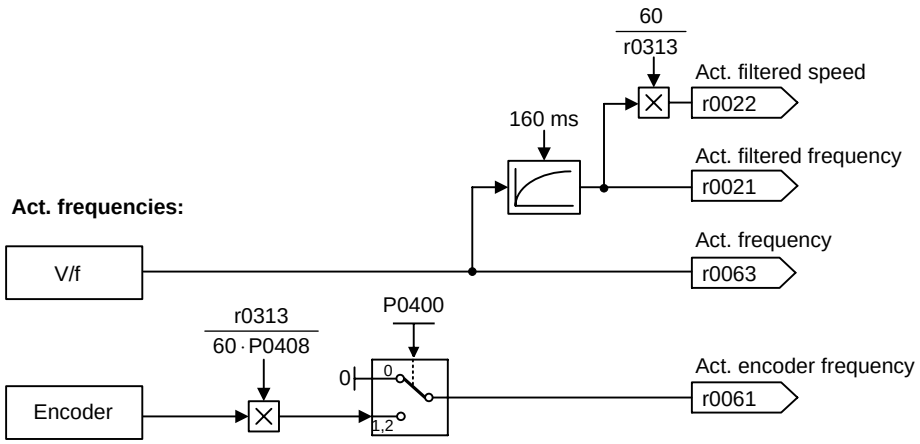

r0065	**CO: Slip frequency**			**Min:** -	Level
		Datatype: Float	**Unit:** %	**Def:** -	**3**
	P-Group: CONTROL			**Max:** -	

Displays slip frequency of motor in [%] relative to the rated motor frequency (P0310).

Details:

For V/f control, see also P1335 (slip compensation).

r0067	**CO: Act. output current limit**			**Min:** -	Level
		Datatype: Float	**Unit:** A	**Def:** -	**3**
	P-Group: CONTROL			**Max:** -	

Displays valid maximum output current of inverter.

Parameter r0067 is influenced/determined by the following factors:
- Rated motor current P0305
- Motor overload factor P0640
- Motor protection in dependency of P0610
- r0067 is less than or equal to maximum inverter current r0209
- Inverter protection in dependency of P0290

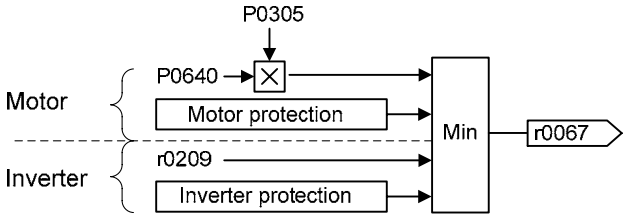

Note:
A reduction of r0067 may indicate an inverter overload or a motor overload.

r0068	**CO: Output current**	**Datatype:** Float	**Unit:** A	**Min:** - **Def:** - **Max:** -	Level **3**
	P-Group: CONTROL				

Displays unfiltered [rms] value of motor current [A].

Note:
This is used for the process control (contrary to the smoothed output current r0027, that is used for display).

r0071	**CO: Max. output voltage**	**Datatype:** Float	**Unit:** V	**Min:** - **Def:** - **Max:** -	Level **3**
	P-Group: CONTROL				

Displays maximum output voltage.

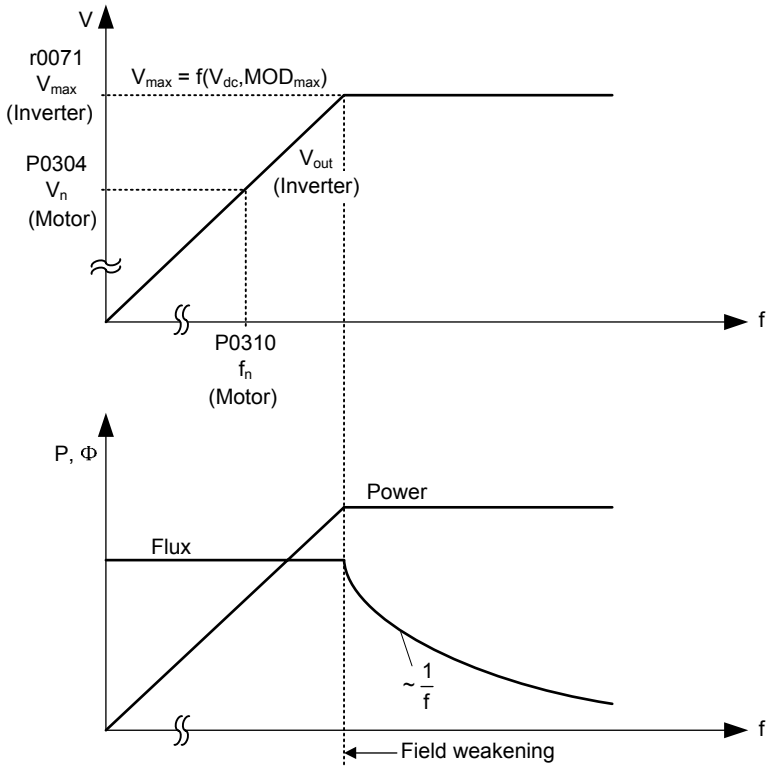

Dependency:
- The actual maximum output voltage depends on the actual incoming line supply voltage.
- The maximum possible output voltage r0071 of the drive inverter is determined by the DC link voltage r0026 and the maximum modulation depth P1803 in the gating unit.
- The maximum output voltage r0071 is tracked with the DC link voltage so that the highest possible value is always and automatically achieved.
- The output voltage only reaches the calculated maximum value under steady-state conditions at the rated load.
- In the no-load and partial load ranges, lower output voltages r0025 are obtained.

r0080	**CO: Act. torque**	**Datatype:** Float	**Unit:** Nm	**Min:** - **Def:** - **Max:** -	Level **3**
	P-Group: CONTROL				

Displays actual torque. Output value will be zero at low frequencies when current injection is active (r1751.5 = 1).

r0086	**CO: Act. active current**			**Min:** -	Level
		Datatype: Float	**Unit:** A	**Def:** -	**3**
	P-Group: CONTROL			**Max:** -	

Displays active (real part) of motor current.

Dependency:

Applies when V/f control is selected in P1300 (control mode); otherwise, the display shows the value zero.

P0095[10]	**CI: Display PZD signals**			**Min:** 0:0	Level
	CStat: CT	**Datatype:** U32	**Unit:** -	**Def:** 0:0	**3**
	P-Group: CONTROL	**Active:** first confirm	**QuickComm.:** No	**Max:** 4000:0	

Selects source of display for PZD signals.

Index:

P0095[0] : 1st PZD signal
P0095[1] : 2nd PZD signal
P0095[2] : 3rd PZD signal
P0095[3] : 4th PZD signal
P0095[4] : 5th PZD signal
P0095[5] : 6th PZD signal
P0095[6] : 7th PZD signal
P0095[7] : 8th PZD signal
P0095[8] : 9th PZD signal
P0095[9] : 10th PZD signal

r0096[10]	**PZD signals**			**Min:** -	Level
		Datatype: Float	**Unit:** %	**Def:** -	**3**
	P-Group: CONTROL			**Max:** -	

Displays PZD signals in [%].

Index:

r0096[0] : 1st PZD signal
r0096[1] : 2nd PZD signal
r0096[2] : 3rd PZD signal
r0096[3] : 4th PZD signal
r0096[4] : 5th PZD signal
r0096[5] : 6th PZD signal
r0096[6] : 7th PZD signal
r0096[7] : 8th PZD signal
r0096[8] : 9th PZD signal
r0096[9] : 10th PZD signal

Note:

r0096 = 100 % corresponds to 4000 hex.

3.3 Inverter parameters (HW)

P0100	**Europe / North America**			**Min:** 0	Level
	CStat: C	**Datatype:** U16	**Unit:** -	**Def:** 0	**1**
	P-Group: QUICK	**Active:** first confirm	**QuickComm.:** Yes	**Max:** 2	

Determines whether power settings (e.g. nominal rating plate power - P0307) are expressed in [kW] or [hp].

The default settings for the nominal rating plate frequency (P0310) and maximum motor frequency (P1082) are also set automatically here, in addition to reference frequency (P2000).

Possible Settings:

0 Europe [kW], frequency default 50 Hz
1 North America [hp], frequency default 60 Hz
2 North America [kW], frequency default 60 Hz

Dependency:

Where:

- Stop drive first (i.e. disable all pulses) before you change this parameter.
- Changing P0100 resets all rated motor parameters as well as other parameters that depend on the rated motor parameters (see P0340 - calculation of motor parameters).

Changing P0100 overwrites the settings of the DIP50/60 switch (location shown in the diagram below):

1. Parameter P0100 has an higher priority than the DIP50/60 switch.
2. However, after the inverter is powered-on again and P0100 < 2, the DIP50/60 setting will take priority and overwrite P0100.
3. The DIP50/60 switch does not have any effect, if P0100 = 2.

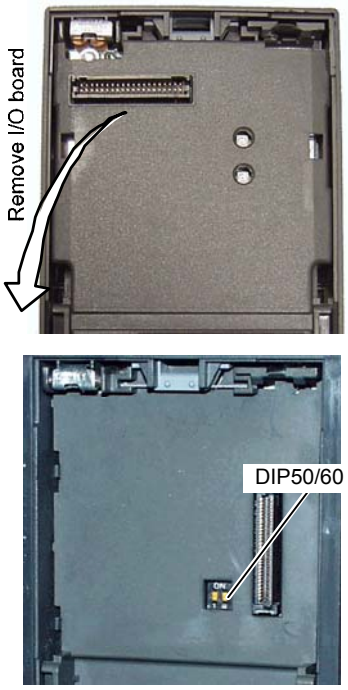

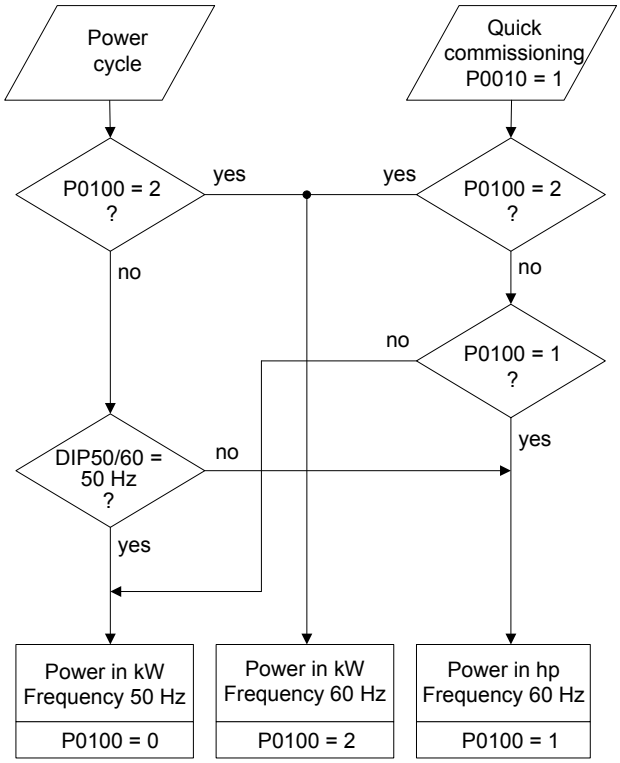

Notice:

P0100 setting 2 (==> [kW], frequency default 60 [Hz]) is not overwritten by the setting of DIP switch 2 (see diagram above).

P0199	**Equipment system number**			**Min:** 0	Level
	CStat: UT	**Datatype:** U16	**Unit:** -	**Def:** 0	**2**
	P-Group: -	**Active:** first confirm	**QuickComm.:** No	**Max:** 255	

Equipment system number. This parameter has no operation effect.

r0200	**Act. power stack code number**			**Min:** -	Level
		Datatype: U32	**Unit:** -	**Def:** -	**3**
	P-Group: INVERTER			**Max:** -	

Identifies hardware variant as shown in table below.

Code-No.	MM430 MLFB	Input Voltage & Frequency	VT Power kW	Internal Filter	Protection Degree	Frame Size
271	6SE6430-2UD27-5CA0	3AC380-480V +10% -10% 47-63Hz	7.5	no	IP20	C
272	6SE6430-2UD31-1CA0	3AC380-480V +10% -10% 47-63Hz	11	no	IP20	C
273	6SE6430-2UD31-5CA0	3AC380-480V +10% -10% 47-63Hz	15	no	IP20	C
274	6SE6430-2AD27-5CA0	3AC380-480V +10% -10% 47-63Hz	7.5	Cl. A	IP20	C
275	6SE6430-2AD31-1CA0	3AC380-480V +10% -10% 47-63Hz	11	Cl. A	IP20	C
276	6SE6430-2AD31-5CA0	3AC380-480V +10% -10% 47-63Hz	15	Cl. A	IP20	C
277	6SE6430-2UD31-8DA0	3AC380-480V +10% -10% 47-63Hz	18.5	no	IP20	D
278	6SE6430-2UD32-2DA0	3AC380-480V +10% -10% 47-63Hz	22	no	IP20	D
279	6SE6430-2UD33-0DA0	3AC380-480V +10% -10% 47-63Hz	30	no	IP20	D
280	6SE6430-2AD31-8DA0	3AC380-480V +10% -10% 47-63Hz	18.5	Cl. A	IP20	D
281	6SE6430-2AD32-2DA0	3AC380-480V +10% -10% 47-63Hz	22	Cl. A	IP20	D
282	6SE6430-2AD33-0DA0	3AC380-480V +10% -10% 47-63Hz	30	Cl. A	IP20	D
283	6SE6430-2UD33-7EA0	3AC380-480V +10% -10% 47-63Hz	37	no	IP20	E
284	6SE6430-2UD34-5EA0	3AC380-480V +10% -10% 47-63Hz	45	no	IP20	E
285	6SE6430-2AD33-7EA0	3AC380-480V +10% -10% 47-63Hz	37	Cl. A	IP20	E
286	6SE6430-2AD34-5EA0	3AC380-480V +10% -10% 47-63Hz	45	Cl. A	IP20	E
287	6SE6430-2UD35-5FA0	3AC380-480V +10% -10% 47-63Hz	55	no	IP20	F
288	6SE6430-2UD37-5FA0	3AC380-480V +10% -10% 47-63Hz	75	no	IP20	F
289	6SE6430-2UD38-8FA0	3AC380-480V +10% -10% 47-63Hz	90	no	IP20	F
290	6SE6430-2AD35-5FA0	3AC380-480V +10% -10% 47-63Hz	55	Cl. A	IP20	F
291	6SE6430-2AD37-5FA0	3AC380-480V +10% -10% 47-63Hz	75	Cl. A	IP20	F
292	6SE6430-2AD38-8FA0	3AC380-480V +10% -10% 47-63Hz	90	Cl. A	IP20	F
1201	6SE6430-2UD41-1FA0	3AC380-480V +10% -10% 47-63Hz	110	no	IP20	FX
1202	6SE6430-2UD41-3FA0	3AC380-480V +10% -10% 47-63Hz	132	no	IP20	FX
1203	6SE6430-2UD41-6GA0	3AC380-480V +10% -10% 47-63Hz	160	no	IP20	GX
1204	6SE6430-2UD42-0GA0	3AC380-480V +10% -10% 47-63Hz	200	no	IP20	GX
1205	6SE6430-2UD42-5GA0	3AC380-480V +10% -10% 47-63Hz	250	no	IP20	GX

Notice:

Parameter r0200 = 0 indicates that no power stack has been identified.

P0201	**Power stack code number**			**Min:** 0	Level
	CStat: C	**Datatype:** U16	**Unit:** -	**Def:** 0	**3**
	P-Group: INVERTER	**Active:** first confirm	**QuickComm.:** No	**Max:** 65535	

Confirms actual power stack identified.

r0203	**Act. inverter type**			**Min:** -	Level
		Datatype: U16	**Unit:** -	**Def:** -	**3**
	P-Group: INVERTER			**Max:** -	

Type number of actual inverter identified.

Possible Settings:

1 MICROMASTER 420
2 MICROMASTER 440
3 MICRO- / COMBIMASTER 411
4 MICROMASTER 410
5 Reserved
6 MICROMASTER 440 PX
7 MICROMASTER 430
8 MICROMASTER 430 PX

r0204	**Power stack features**			**Min:** -	Level
		Datatype: U32	**Unit:** -	**Def:** -	**3**
	P-Group: INVERTER			**Max:** -	

Displays hardware features of power stack.

Bitfields:

Bit00	DC input voltage	0	NO	1	YES
Bit01	RFI filter	0	NO	1	YES

Note:

Parameter r0204 = 0 indicates that no power stack has been identified.

r0206	**Rated inverter power [kW] / [hp]**			**Min:** -	Level
		Datatype: Float	**Unit:** -	**Def:** -	**3**
	P-Group: INVERTER			**Max:** -	

Displays nominal rated motor power from inverter.

Dependency:

Value is displayed in [kW] or [hp] depending on setting for P0100 (operation for Europe / North America).

$$r0206\,[hp] = 0.75 \cdot r0206\,[kW]$$

r0207[2]	**Rated inverter current**			**Min:** -	Level
		Datatype: Float	**Unit:** A	**Def:** -	**3**
	P-Group: INVERTER			**Max:** -	

Displays rated output current of inverter.
r0207[0] : Rated inverter current
r0207[1] : Rated motor current

r0208	**Rated inverter voltage**			**Min:** -	Level
		Datatype: U32	**Unit:** V	**Def:** -	**3**
	P-Group: INVERTER			**Max:** -	

Displays nominal AC supply voltage of inverter.

Value:

r0208 = 400 : 380 - 480 V +/- 10 %

r0209	**Maximum inverter current**			**Min:** -	Level
		Datatype: Float	**Unit:** A	**Def:** -	**3**
	P-Group: INVERTER			**Max:** -	

Displays maximum output current of inverter.

Dependency:

Parameter r0209 depends on the derating which is affected by pulse frequency P1800, ambient temperature and altitude. The data of deration is given in the OPERATING INSRTRUCTION.

P0210	**Supply voltage**			**Min:** 0	Level
	CStat: CT	**Datatype:** U16	**Unit:** V	**Def:** 230	**3**
	P-Group: INVERTER	**Active:** Immediately	**QuickComm.:** No	**Max:** 1000	

Parameter P0210 defines the supply voltage. Its default value depends upon the type of inverter. If P0210 does not correspond to the supply voltage, then it must be modified.

When P0210 has been modified, the following thresholds are changed:

Vdc_max switch-on level $= 1.15 \cdot \sqrt{2} \cdot P0210$

Compound braking switch-on level $= 1.13 \cdot \sqrt{2} \cdot P0210$

Dependency:

Optimizes Vdc controller, which extends the ramp-down time if regenerative energy from motor would otherwise cause DC link overvoltage trips.

Reducing the value enables controller to cut in earlier and reduce the risk of overvoltage.

Set P1254 ("Auto detect Vdc switch-on levels") = 0. Cut-in levels for Vdc-controller and compound braking are then derived directly from P0210 (supply voltage).

Note:

- If mains voltage is higher than value entered, automatic deactivation of the Vdc controller may occur to avoid acceleration of the motor. An alarm will be issued in this case (A0910).
- Default value is depending on inverter type and its rating data.

r0231[2]	**Max. cable length**			**Min:** -	Level
		Datatype: U16	**Unit:** m	**Def:** -	**3**
	P-Group: INVERTER			**Max:** -	

Indexed parameter to display maximum allowable cable length between inverter and motor.

Index:

r0231[0] : Max. allowed unscreened cable length
r0231[1] : Max. allowed screened cable length

Notice:

For full EMC compliance, the screened cable must not exceed 25 m in length when an EMC filter is fitted.

P0290	**Inverter overload reaction**			**Min:** 0	Level
	CStat: CT	**Datatype:** U16	**Unit:** -	**Def:** 2	**3**
	P-Group: INVERTER	**Active:** first confirm	**QuickComm.:** No	**Max:** 3	

Selects reaction of inverter to an internal over-temperature.

Following physical values influence the inverter overload protection (see diagram):

- heat sink temperature
- junction temperature (IGBT temperature)
- inverter I²t

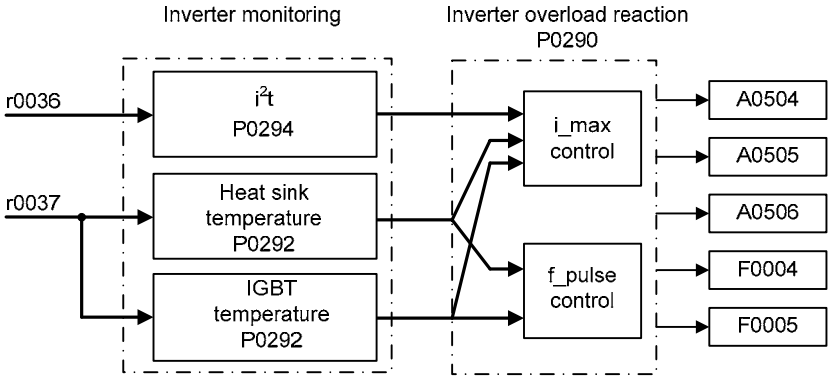

Possible Settings:

0 Reduce output frequency
1 Trip (F0004/F0005)
2 Reduce pulse frequency and output frequency
3 Reduce pulse frequency then trip (F0004/F0005)

Notice:

P0290 = 0:
Reduction of output frequency is only effective if the load is also reduced. This is for example valid for variable torque applications with a quadratic torque characteristic as pumps or fans.

A trip will always result, if the action taken does not sufficiently reduce internal temperature.

The pulse frequency P1800 is reduced only if higher than 2 kHz. The actual pulse frequency is displayed in parameter r1801.

If an inverter I²t overload warning is set, the inverter reduce the output frequency. If f_min > 0 the reduction can cause a output frequency under the value of f_min. To protect a self-cooled motor under any circumstances a PTC or KTY has to be used.

P0291[3]	**Inverter protection**			**Min:** 0	Level
	CStat: CT	**Datatype:** U16	**Unit:** -	**Def:** 1	**3**
	P-Group: INVERTER	**Active:** Immediately	**QuickComm.:** No	**Max:** 7	

Bit 02 shows if phase loss dedection (input phase) of 3 phase inverters is enabled after factory reset. Default setting of phase loss is disabled for FSC. FSD and greater it is enabled.

Bitfields:

Bit00	Reserved	0	NO	1	YES
Bit01	Reserved	0	NO	1	YES
Bit02	Phase loss detection enable	0	NO	1	YES

Index:

P0291[0] : 1st. Drive data set (DDS)
P0291[1] : 2nd. Drive data set (DDS)
P0291[2] : 3rd. Drive data set (DDS)

Details:

See P0290 (inverter overload reaction)

P0292	**Inverter temperature warning**			**Min:** 0	Level
	CStat: CUT	**Datatype:** U16	**Unit:** °C	**Def:** 15	**3**
	P-Group: INVERTER	**Active:** first confirm	**QuickComm.:** No	**Max:** 25	

Defines the temperature difference (in ºC) between the Overtemperature trip threshold and the warning threshold of the inverter. The trip threshold is stored internally by the inverter and cannot be changed by the user.

Temperature warning threshold of inverter T_warn

$$T_{warn} = T_{trip} - P0292$$

Temperature shutdown threshold of inverter T_trip

Temperature	MM430, Frame Size						
	C	D - F	FX		GX		
			110 kW VT	132 kW VT	160 kW VT	200 kW VT	250 kW VT
Heat sink	110 °C	95 °C	88 °C	91 °C	80 °C	82 °C	88 °C
IGBT	140 °C	145 °C	150 °C	150 °C	145 °C	147 °C	150 °C
Input rectifier	-	-	75 °C	75 °C	75 °C	75 °C	75 °C
Cooling air	-	-	55 °C	55 °C	55 °C	55 °C	50 °C
Control board	-	-	65 °C	65 °C	65 °C	65 °C	65 °C

If the actual inverter temperature (r0037) exceeds the corresponding threshold, a warning A0504, if the temperature still increases then a fault F0004 will be displayed.

P0295	**Inverter fan off delay time**			**Min:** 0	Level
	CStat: CUT	**Datatype:** U16	**Unit:** s	**Def:** 0	**3**
	P-Group: TERMINAL	**Active:** first confirm	**QuickComm.:** No	**Max:** 3600	

Defines inverter fan switch off delay time in seconds after drive has stopped.

Note:

Setting to 0, inverter fan will switch off when the drive stops, that is no delay.

3.4 Motor parameters

P0304[3]	**Rated motor voltage**			**Min:** 10	Level
	CStat: C	**Datatype:** U16	**Unit:** V	**Def:** 230	**1**
	P-Group: MOTOR	**Active:** first confirm	**QuickComm.:** Yes	**Max:** 2000	

Nominal motor voltage [V] from rating plate. Following diagram shows a typical rating plate with the locations of the relevant motor data.

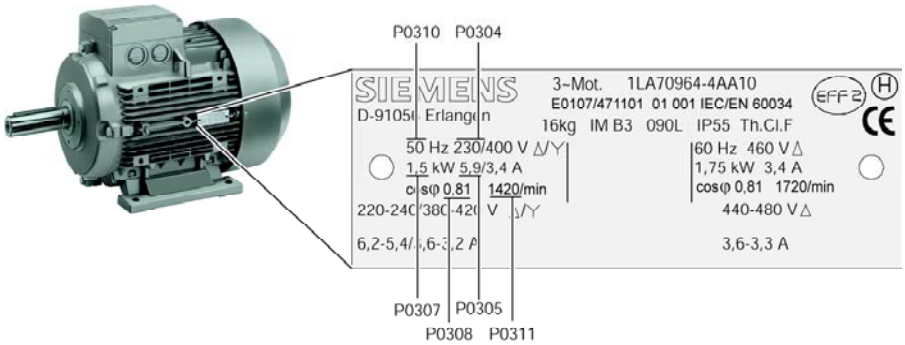

Line supply voltage	1 AC 110 V *)	1 AC 230 V	3 AC 230 V	3 AC 400 V	3 AC 500 V
MICROMASTER 410	X	X	-	-	-
MICROMASTER 411	-	-	-	X	-
MICROMASTER 420	-	X	X	X	-
MICROMASTER 430	-	-	-	X	-
MICROMASTER 440	-	X	X	X	X

*) Line supply voltage 1-ph. 110 V AC is stepped-up --> frequency inverter output voltage 3-ph. 230 V AC

Index:
P0304[0] : 1st. Drive data set (DDS)
P0304[1] : 2nd. Drive data set (DDS)
P0304[2] : 3rd. Drive data set (DDS)

Dependency:
- Changeable only when P0010 = 1 (quick commissioning).
- Default value is depending on inverter type and its rating data.

Caution:

The input of rating plate data must correspond with the wiring of the motor (star / delta). This means, if delta wiring is used for the motor, delta rating plate data has to be entered.

IEC Motor

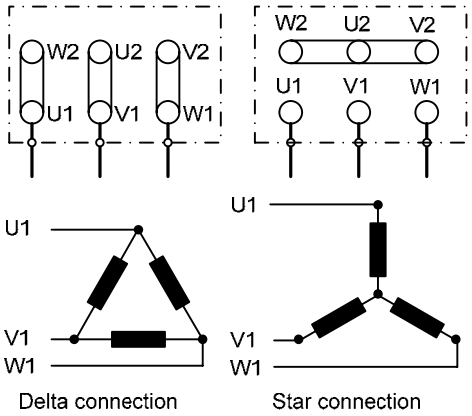

e.g.: Volts 230 V (Delta connection) / 400 V (Star connection)

NEMA Motor

Volts	U	V	W	Connected together			Connection
low	T_1-T_7	T_2-T_8	T_3-T_9	T_4-T_5-T_6			Y Y
high	T_1	T_2	T_3	T_1-T_7	T_2-T_8	T_3-T_9	Y

e.g.: Volts 230 V YY (low) / 460 V Y (high)

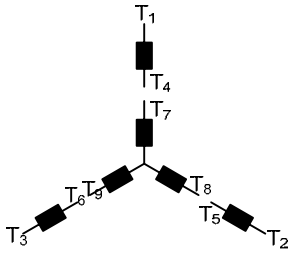

Volts	U	V	W	Connected together			Connection
low	T_1-T_6-T_7	T_2-T_4-T_8	T_3-T_5-T_9	-			Δ Δ
high	T_1	T_2	T_3	T_4-T_7	T_5-T_8	T_6-T_9	Δ

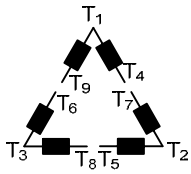

P0305[3] Rated motor current

CStat:	C	**Datatype:** Float	**Unit:** A	**Min:**	0.01
P-Group:	MOTOR	**Active:** first confirm	**QuickComm.:** Yes	**Def:**	3.25
				Max:	10000.00

Level **1**

Nominal motor current [A] from rating plate - see diagram in P0304.

Index:

P0305[0] : 1st. Drive data set (DDS)
P0305[1] : 2nd. Drive data set (DDS)
P0305[2] : 3rd. Drive data set (DDS)

Dependency:

- Changeable only when P0010 = 1 (quick commissioning).
- Default value is depending on inverter type and its rating data.

- Depends also on P0320 (motor magnetization current).

Note:

The maximum value of P0305 depends on the maximum inverter current r0209 and the motor type:

Asynchronous motor : $P0305_{max,\,asyn} = r0209$

Synchronous motor : $P0305_{max,\,syn} = 2 \cdot r0209$

It is recommanded that the ratio of P0305 (rated motor current) and r0207 (rated inverter current) should not be lower than:

V/f: $\frac{1}{8} \leq \frac{P0305}{r0207}$

P0307[3]	**Rated motor power**			**Min:** 0.01	Level
	CStat: C	**Datatype:** Float	**Unit:** -	**Def:** 0.12	**1**
	P-Group: MOTOR	**Active:** first confirm	**QuickComm.:** Yes	**Max:** 2000.00	

Nominal motor power [kW/hp] from rating plate.

Index:

P0307[0] : 1st. Drive data set (DDS)
P0307[1] : 2nd. Drive data set (DDS)
P0307[2] : 3rd. Drive data set (DDS)

Dependency:

- If P0100 = 1, values will be in [hp] - see diagram P0304 (rating plate).
- Changeable only when P0010 = 1 (quick commissioning).
- Default value is depending on inverter type and its rating data.

P0308[3]	**Rated motor cosPhi**			**Min:** 0.000	Level
	CStat: C	**Datatype:** Float	**Unit:** -	**Def:** 0.000	**1**
	P-Group: MOTOR	**Active:** first confirm	**QuickComm.:** Yes	**Max:** 1.000	

Nominal motor power factor (cosPhi) from rating plate - see diagram P0304.

Index:

P0308[0] : 1st. Drive data set (DDS)
P0308[1] : 2nd. Drive data set (DDS)
P0308[2] : 3rd. Drive data set (DDS)

Dependency:

- Changeable only when P0010 = 1 (quick commissioning).
- Visible only when P0100 = 0 or 2, (motor power entered in [kW]).
- Default value is depending on inverter type and its rating data.

- Setting 0 causes internal calculation of value. Calculated value see r0332.

P0309[3]	**Rated motor efficiency**			**Min:** 0.0	Level
	CStat: C	**Datatype:** Float	**Unit:** %	**Def:** 0.0	**1**
	P-Group: MOTOR	**Active:** first confirm	**QuickComm.:** Yes	**Max:** 99.9	

Nominal motor efficiency in [%] from rating plate.

Index:

P0309[0] : 1st. Drive data set (DDS)
P0309[1] : 2nd. Drive data set (DDS)
P0309[2] : 3rd. Drive data set (DDS)

Dependency:

- Changeable only when P0010 = 1 (quick commissioning).
- Visible only when P0100 = 1, (i.e. motor power entered in [hp]).
- Default value is depending on inverter type and its rating data.

- Setting 0 causes internal calculation of value. Calculated value see r0332.

Note:

P0309 = 100 % corresponds to superconducting.

Details:

See diagram in P0304 (rating plate).

P0310[3]	**Rated motor frequency**			**Min:** 12.00	Level
	CStat: C	**Datatype:** Float	**Unit:** Hz	**Def:** 50.00	**1**
	P-Group: MOTOR	**Active:** first confirm	**QuickComm.:** Yes	**Max:** 650.00	

Nominal motor frequency [Hz] from rating plate.

Index:

P0310[0] : 1st. Drive data set (DDS)
P0310[1] : 2nd. Drive data set (DDS)
P0310[2] : 3rd. Drive data set (DDS)

Dependency:

- Changeable only when P0010 = 1 (quick commissioning).
- Pole pair number recalculated automatically if parameter is changed.

Details:

See diagram in P0304 (rating plate)

P0311[3]	**Rated motor speed**			**Min:** 0	Level
	CStat: C	**Datatype:** U16	**Unit:** 1/min	**Def:** 0	**1**
	P-Group: MOTOR	**Active:** first confirm	**QuickComm.:** Yes	**Max:** 40000	

Nominal motor speed [rpm] from rating plate.

Index:

P0311[0] : 1st. Drive data set (DDS)
P0311[1] : 2nd. Drive data set (DDS)
P0311[2] : 3rd. Drive data set (DDS)

Dependency:

- Changeable only when P0010 = 1 (quick commissioning).
- Setting 0 causes internal calculation of value.
- Slip compensation in V/f control requires rated motor speed for correct operation.
- Pole pair number recalculated automatically if parameter is changed.
- Default value is depending on inverter type and its rating data.

Details:

See diagram in P0304 (rating plate)

r0313[3]	**Motor pole pairs**			**Min:** -	Level
		Datatype: U16	**Unit:** -	**Def:** -	**3**
	P-Group: MOTOR			**Max:** -	

Displays number of motor pole pairs that the inverter is currently using for internal calculations.

Index:

r0313[0] : 1st. Drive data set (DDS)
r0313[1] : 2nd. Drive data set (DDS)
r0313[2] : 3rd. Drive data set (DDS)

Value:

r0313 = 1 : 2-pole motor
r0313 = 2 : 4-pole motor
etc.

Dependency:

Recalculated automatically when P0310 (rated motor frequency) or P0311 (rated motor speed) is changed.

$$r0313 = 60 \cdot \frac{P0310}{P0311}$$

P0320[3]	**Motor magnetizing current**			**Min:** 0.0	Level
	CStat: CT	**Datatype:** Float	**Unit:** %	**Def:** 0.0	**3**
	P-Group: MOTOR	**Active:** Immediately	**QuickComm.:** Yes	**Max:** 99.0	

Defines motor magnetization current in [%] relative to P0305 (rated motor current).

Index:

P0320[0] : 1st. Drive data set (DDS)
P0320[1] : 2nd. Drive data set (DDS)
P0320[2] : 3rd. Drive data set (DDS)

Dependency:

P0320 = 0:
Setting 0 causes calculation by P0340 = 1 (data entered from rating plate) or by P3900 = 1 - 3 (end of quick commissioning). The calculated value is displayed in parameter r0331.

r0330[3]	**Rated motor slip**			**Min:** -	Level
		Datatype: Float	**Unit:** %	**Def:** -	**3**
	P-Group: MOTOR			**Max:** -	

Displays nominal motor slip in [%] relative to P0310 (rated motor frequency) and P0311 (rated motor speed).

$$r0330\,[\%] = \frac{P0310 - \frac{P0311}{60} \cdot r0313}{P0310} \cdot 100\,\%$$

Index:

r0330[0] : 1st. Drive data set (DDS)
r0330[1] : 2nd. Drive data set (DDS)
r0330[2] : 3rd. Drive data set (DDS)

r0331[3]	**Rated magnetization current**			**Min:** -	Level
		Datatype: Float	**Unit:** A	**Def:** -	**3**
	P-Group: MOTOR			**Max:** -	

Displays calculated magnetizing current of motor in [A].

Index:

r0331[0] : 1st. Drive data set (DDS)
r0331[1] : 2nd. Drive data set (DDS)
r0331[2] : 3rd. Drive data set (DDS)

r0332[3]	**Rated power factor**			**Min:** -	Level
		Datatype: Float	**Unit:** -	**Def:** -	**3**
	P-Group: MOTOR			**Max:** -	

Displays power factor for motor

Index:

r0332[0] : 1st. Drive data set (DDS)
r0332[1] : 2nd. Drive data set (DDS)
r0332[2] : 3rd. Drive data set (DDS)

Dependency:

Value is calculated internally if P0308 (rated motor cosPhi) set to 0; otherwise, value entered in P0308 is displayed.

P0335[3]	**Motor cooling**			**Min:** 0	Level
	CStat: CT	**Datatype:** U16	**Unit:** -	**Def:** 0	**3**
	P-Group: MOTOR	**Active:** first confirm	**QuickComm.:** Yes	**Max:** 3	

Selects motor cooling system used.

Possible Settings:

0 Self-cooled: Using shaft mounted fan attached to motor
1 Force-cooled: Using separately powered cooling fan
2 Self-cooled and internal fan
3 Force-cooled and internal fan

Index:

P0335[0] : 1st. Drive data set (DDS)
P0335[1] : 2nd. Drive data set (DDS)
P0335[2] : 3rd. Drive data set (DDS)

Caution:

The following combination of parameter setting should not be combined:

- P0610 = 1 and P0335 = 0 or 2 :
  When P0335 = 0 or 2 the inverter cools the motor using a shaft mounted fan. If this is used in conjunction with P0610 the cooling of the motor will be inefficient. In essence, if the i2t calculation reduces the output frequency, then the shaft mounted fan will also reduce its cooling effect, the motor will then eventually overheat and trip.
- Exception:
  Applications with variable torque the reduction of max. current leeds automatically to a reduction of the load / output current.

Notice:

Motors of series 1LA1 and 1LA8 have an internal fan. This internal motor fan must not be confused with the fan at the end of the motor shaft.

P0340[3]	**Calculation of motor parameters**			**Min:** 0	Level
	CStat: CT	**Datatype:** U16	**Unit:** -	**Def:** 0	**3**
	P-Group: MOTOR	**Active:** first confirm	**QuickComm.:** No	**Max:** 3	

Calculates various motor parameters (see table below). This parameter is required during commissioning to optimize inverter performance.

Possible Settings:

0 No calculation
1 Complete parameterization
2 Calculation of equivalent circuit data
3 Calculation of V/f data

Index:

P0340[0] : 1st. Drive data set (DDS)
P0340[1] : 2nd. Drive data set (DDS)
P0340[2] : 3rd. Drive data set (DDS)

Note:

P0340 = 0:
No calculation

P0340 = 1:
The motor weight/moment of inertia (P0344, P0341) are determined starting from the rating plate parameters (P0300 - P0335), the motor equivalent circuit diagram parameters (ESB, P0350 - P0369). The V/f control parameters and reference quantities are then pre-assigned (includes all of the calculations from P0340 = 2,3).

P0340 = 2:
The motor equivalent circuit diagram parameters (ESB, P0350 - P0369) are calculated starting from the rating plate parameters (without any other pre-assignments made).

P0340 = 3:
The V/f control parameters are determined starting from the motor equivalent circuit diagram parameters (ESB, P0350 - P0369) and motor weight/moment of inertia, moment of inertia ratio (P0344, P0341, P0342).

	P0340 = 1	P0340 = 2	P0340 = 3
P0344[3] Motor weight	x		
P0346[3] Magnetization time	x		x
P0347[3] Demagnetization time	x		x
P0350[3] Stator resistance (line-to-line)	x	x	
P0352[3] Cable resistance	x	x	
P0625[3] Ambient motor temperature	x	x	
P1253[3] Vdc-controller output limitation	x		x
P1316[3] Boost end frequency	x		x
P2000[3] Reference frequency	x		
P2002[3] Reference current	x		
P2003[3] Reference torque	x		
P2174[3] Torque threshold M_thresh	x		
P2185[3] Upper torque threshold 1	x		
P2186[3] Lower torque threshold 1	x		
P2187[3] Upper torque threshold 2	x		
P2188[3] Lower torque threshold 2	x		
P2189[3] Upper torque threshold 3	x		
P2190[3] Lower torque threshold 3	x		

P0344[3]	**Motor weight**			**Min:** 1.0	Level
	CStat: CUT	**Datatype:** Float	**Unit:** kg	**Def:** 9.4	**3**
	P-Group: MOTOR	**Active:** Immediately	**QuickComm.:** No	**Max:** 6500.0	

Specifies motor weight [kg].

Index:

P0344[0] : 1st. Drive data set (DDS)
P0344[1] : 2nd. Drive data set (DDS)
P0344[2] : 3rd. Drive data set (DDS)

Note:

- This value is used in the motor thermal model.
- It is normally calculated automatically from P0340 (motor parameters) but can also be entered manually.
- Default value is depending on inverter type and its rating data.

P0346[3]	**Magnetization time**				**Min:** 0.000	Level
	CStat: CUT	**Datatype:** Float	**Unit:** s		**Def:** 1.000	**3**
	P-Group: MOTOR	**Active:** Immediately	**QuickComm.:** No		**Max:** 20.000	

Sets magnetization time [s], i.e. waiting time between pulse enable and start of ramp-up. Motor magnetization builds up during this time.

Magnetization time is normally calculated automatically from the motor data and corresponds to the rotor time constant (r0384).

Index:

P0346[0] : 1st. Drive data set (DDS)
P0346[1] : 2nd. Drive data set (DDS)
P0346[2] : 3rd. Drive data set (DDS)

Note:

- If boost settings are higher than 100 %, magnetization time may be reduced.
- Default value is depending on inverter type and its rating data.
- An excessive reduction of this time can result in insufficient motor magnetization.

P0347[3]	**Demagnetization time**				**Min:** 0.000	Level
	CStat: CUT	**Datatype:** Float	**Unit:** s		**Def:** 1.000	**3**
	P-Group: MOTOR	**Active:** Immediately	**QuickComm.:** No		**Max:** 20.000	

Defines the de-magnetization time for the connected induction motor.

The de-magnetization time is the time that must expire between powering-down the drive (OFF2 or a drive inverter fault/error) and powering-up again. The drive inverter is prevented from being powered-up again within this time interval. The flux in the induction motor is reduced to a low value during this de-magnetization time.

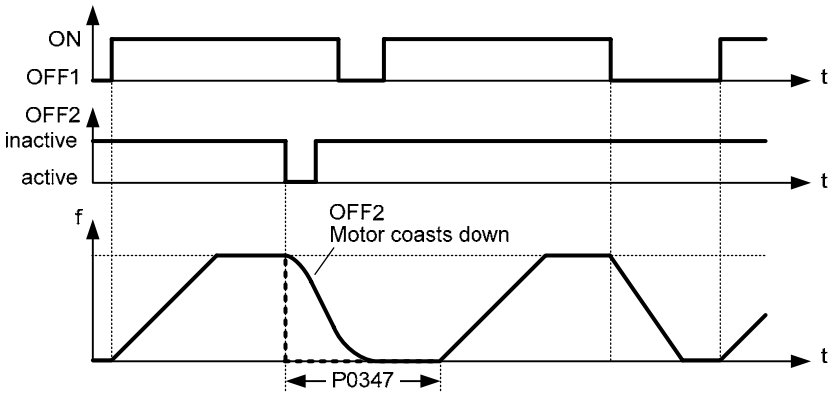

Index:

P0347[0] : 1st. Drive data set (DDS)
P0347[1] : 2nd. Drive data set (DDS)
P0347[2] : 3rd. Drive data set (DDS)

Note:

- The de-magnetization time is approximately 250% of the rotor time constant (r0384) in seconds.
- The pre-assignment (default value) depends on the drive inverter type and its rated/nominal values.
- It is not active after a normal ramp-down - i.e. after OFF1 or OFF3.
- If this time is excessively shortened, then the drive inverter will be tripped (shut down) due to an overcurrent condition.
- If a synchronous motor is connected, the de-magnetization time should be set to 0.

P0350[3]	**Stator resistance (line-to-line)**			**Min:** 0.00001	Level
	CStat: CUT	**Datatype:** Float	**Unit:** Ohm	**Def:** 4.00000	**3**
	P-Group: MOTOR	**Active:** Immediately	**QuickComm.:** No	**Max:** 2000.00000	

Stator resistance value in [Ohms] for connected motor (from line-to-line). The parameter value includes the cable resistance.

$$P0350 = 2 \cdot (R_{Cable} + R_S)$$

There are three ways to determine the value for this parameter:
1. Calculate using
   - P0340 = 1 (data entered from rating plate) or
   - P0010 = 1, P3900 = 1,2 or 3 (end of quick commissioning).
2. Measure using P1910 = 1 (motor data identification - value for stator resistance is overwritten).
3. Measure manually using an Ohmmeter.

Index:

P0350[0] : 1st. Drive data set (DDS)
P0350[1] : 2nd. Drive data set (DDS)
P0350[2] : 3rd. Drive data set (DDS)

Note:

- Since measured line-to-line, this value may appear to be higher (up to 2 times higher) than expected.
- The value entered in P0350 (stator resistance) is the one obtained by the method last used.
- Default value is depending on inverter type and its rating data.

P0352[3]	**Cable resistance**			**Min:** 0.0	Level
	CStat: CUT	**Datatype:** Float	**Unit:** Ohm	**Def:** 0.0	**3**
	P-Group: MOTOR	**Active:** Immediately	**QuickComm.:** No	**Max:** 120.0	

Describes cable resistance between inverter and motor for one phase.

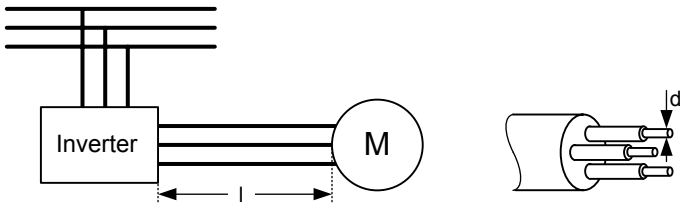

l : Cable length d : Cable diameter

$R = \rho \cdot \frac{l}{A}$ A : Cable cross-section $A = \pi \cdot \left(\frac{d}{2}\right)^2$

ρ : Specific resistance $\rho_{Cu} = 0{,}0178 \frac{\Omega \cdot mm^2}{m}$

Index:

P0352[0] : 1st. Drive data set (DDS)
P0352[1] : 2nd. Drive data set (DDS)
P0352[2] : 3rd. Drive data set (DDS)

P0354[3]	**Rotor resistance**			**Min:** 0.0	Level
	CStat: UT	**Datatype:** Float	**Unit:** Ohm	**Def:** 10.0	**3**
	P-Group: MOTOR	**Active:** Immediately	**QuickComm.:** No	**Max:** 300.0	

Sets rotor resistance of motor equivalent circuit (phase value).

Index:

P0354[0] : 1st. Drive data set (DDS)
P0354[1] : 2nd. Drive data set (DDS)
P0354[2] : 3rd. Drive data set (DDS)

Dependency:

Calculated automatically using the motor model or determined using P1910 (motor identification).

P0356[3]	**Stator leakage inductance**			**Min:** 0.00001	Level
	CStat: UT	**Datatype:** Float	**Unit:** -	**Def:** 10.00000	**3**
	P-Group: MOTOR	**Active:** Immediately	**QuickComm.:** No	**Max:** 1000.00000	

Sets stator leakage inductance [mH] of motor equivalent circuit (phase value).

Stator leakage reactance:

$$X_{\sigma S} = \omega \cdot L_{\sigma S} = 2 \cdot \pi \cdot f \cdot L_{\sigma S} = 2 \cdot \pi \cdot P0310 \cdot \frac{P0356}{1000}$$

Index:

P0356[0] : 1st. Drive data set (DDS)
P0356[1] : 2nd. Drive data set (DDS)
P0356[2] : 3rd. Drive data set (DDS)

Dependency:

Calculated automatically using the motor model or determined using P1910 (motor identification).

P0358[3]	**Rotor leakage inductance**			**Min:** 0.0	Level
	CStat: UT	**Datatype:** Float	**Unit:** -	**Def:** 10.0	**3**
	P-Group: MOTOR	**Active:** Immediately	**QuickComm.:** No	**Max:** 1000.0	

Sets rotor leakage inductance [mH] of motor equivalent circuit (phase value).

Rotor leakage reactance:

$$X_{\sigma R} = \omega \cdot L_{\sigma R} = 2 \cdot \pi \cdot f \cdot L_{\sigma R} = 2 \cdot \pi \cdot P0310 \cdot \frac{P0358}{1000}$$

Index:

P0358[0] : 1st. Drive data set (DDS)
P0358[1] : 2nd. Drive data set (DDS)
P0358[2] : 3rd. Drive data set (DDS)

Dependency:

Calculated automatically using the motor model or determined using P1910 (motor identification).

P0360[3]	**Main inductance**			**Min:** 0.0	Level
	CStat: UT	**Datatype:** Float	**Unit:** -	**Def:** 10.0	**3**
	P-Group: MOTOR	**Active:** Immediately	**QuickComm.:** No	**Max:** 3000.0	

Sets main inductance [mH] of the motor equivalent circuit (phase value), see diagram below.

Main reactance:

$$X_m = \omega \cdot L_m = 2 \cdot \pi \cdot f \cdot L_m = 2 \cdot \pi \cdot P0310 \cdot \frac{P0360}{1000}$$

Index:

P0360[0] : 1st. Drive data set (DDS)
P0360[1] : 2nd. Drive data set (DDS)
P0360[2] : 3rd. Drive data set (DDS)

Dependency:

Calculated automatically using the motor model or determined using P1910 (motor identification).

Caution:

The data of equivalent circuit relates to the star equivalent circuit. Any data of the delta equivalent circuit available, therefore must be transformed to the star equivalent circuit before entering into the inverter.

Note:

T-equivalent circuit :

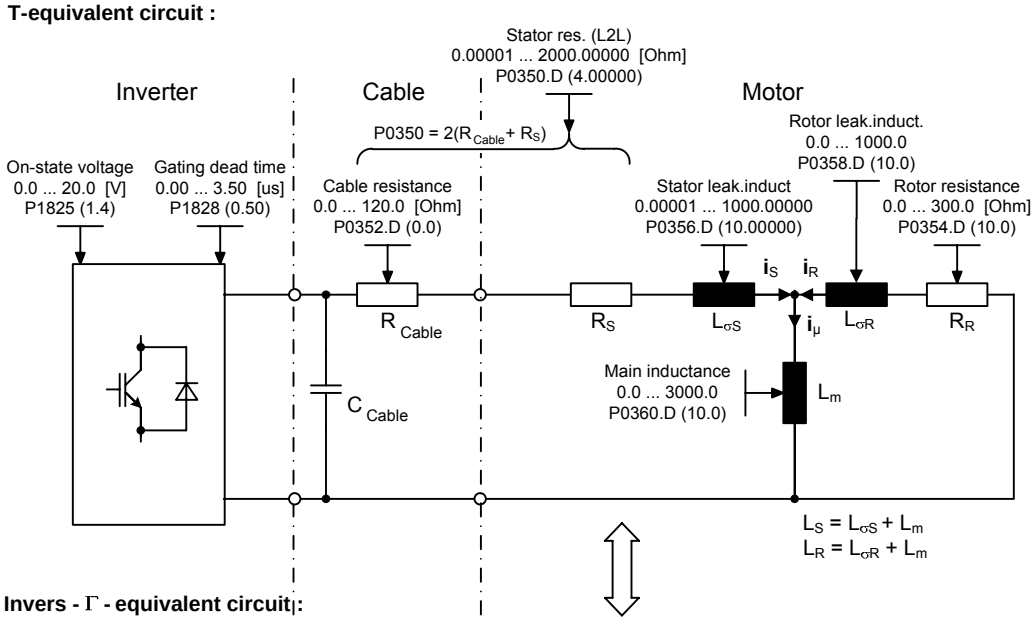

Invers - Γ - equivalent circuit:

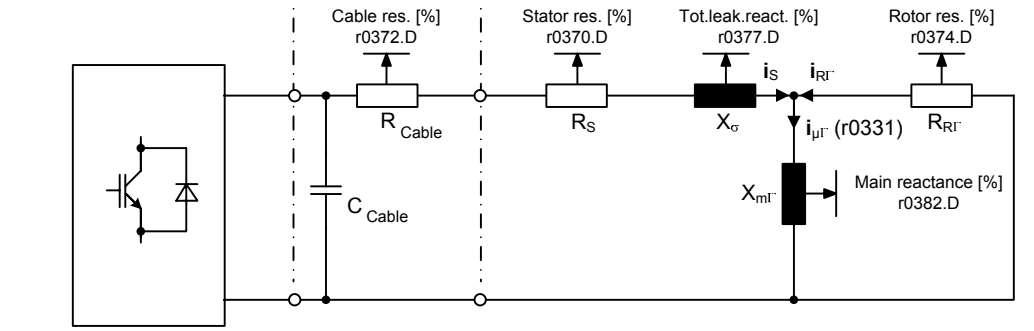

Conversion: T-equivalent curcuit --> Invers - Γ - equivalent circuit

$$k_{\sigma R} = 1 + \frac{L_{\sigma R}}{L_m}$$

$$L_{m\Gamma} = \frac{L_m}{k_{\sigma R}}$$

$$R_{R\Gamma} = \frac{R_R}{k_{\sigma R}^2}$$

$$L_\sigma = L_{\sigma S} + \frac{L_{\sigma R}}{k_{\sigma R}}$$

Conversion: Invers - Γ - equivalent circuit --> T-equivalent curcuit

$$k_{\sigma\Gamma} = 1 + (1 - k_\sigma) \cdot \frac{L_\sigma}{L_{m\Gamma}} = 1 + 0.5 \cdot \frac{L_\sigma}{L_{m\Gamma}}$$

$$R_R = R_{R\Gamma} \cdot k_{\sigma\Gamma}^2$$

$$L_{\sigma S} = k_\sigma \cdot L_\sigma = 0.5 \cdot L_\sigma$$

$$L_{\sigma R} = (1 - k_\sigma) \cdot L_\sigma \cdot k_{\sigma\Gamma} = 0.5 \cdot L_\sigma \cdot k_{\sigma\Gamma}$$

Rated motor impedance:

$$Z_N = \frac{V_{ph}}{I_{ph}} = \frac{V_N}{\sqrt{3} \cdot I_N} = \frac{P0304}{\sqrt{3} \cdot P0305} \quad \text{<=>100 \%}$$

r0384[3]	**Rotor time constant**			**Min:** -	Level
		Datatype: Float	**Unit:** ms	**Def:** -	**3**
	P-Group: MOTOR			**Max:** -	

Displays calculated rotor time constant [ms].

Index:

r0384[0] : 1st. Drive data set (DDS)
r0384[1] : 2nd. Drive data set (DDS)
r0384[2] : 3rd. Drive data set (DDS)

r0395	CO: Total stator resistance [%]	Min: -	Level
	Datatype: Float Unit: %	Def: -	3
	P-Group: MOTOR	Max: -	

Displays the actual stator resistance (combined stator/cable resistance) of the motor as a [%] as a function of the actual stator winding temperature.

Note:

Actual stator winding temperature, refer to r0632

Rated motor impedance:

$$Z_N = \frac{V_{ph}}{I_{ph}} = \frac{V_N}{\sqrt{3} \cdot I_N} = \frac{P0304}{\sqrt{3} \cdot P0305} \text{ <=> } 100\ \%$$

r0396	CO: Act. rotor resistance	Min: -	Level
	Datatype: Float Unit: %	Def: -	3
	P-Group: MOTOR	Max: -	

Displays the actual rotor resistance of the motor equivalent circuit diagram (phase value) as a [%] as a function of the actual rotor winding temperature.

Note:

- Actual rotor winding temperature, refer to r0633
- Values greater than 25 % tend to produce excessive motor slip. Check rated motor speed [rpm] value (P0311).

Rated motor impedance:

$$Z_N = \frac{V_{ph}}{I_{ph}} = \frac{V_N}{\sqrt{3} \cdot I_N} = \frac{P0304}{\sqrt{3} \cdot P0305} \text{ <=> } 100\ \%$$

3.5 Speed encoder

P0400[3]	Select encoder type			Min: 0	Level
	CStat: CT	Datatype: U16	Unit: -	Def: 0	3
	P-Group: ENCODER	Active: Immediately	QuickComm.: No	Max: 2	

Selects encoder type (number of encoder channels).

Possible Settings:

0 Disabled
1 Single channel encoder
2 Quadrature encoder without zero pulse

Index:

P0400[0] : 1st. Drive data set (DDS)
P0400[1] : 2nd. Drive data set (DDS)
P0400[2] : 3rd. Drive data set (DDS)

Dependency:

Following table displays the setting of P0400 which depends upon the number of encoder channels:

Parameter	Terminal	Track	Encoder output
P0400 = 1	A	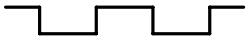	single ended
	A AN	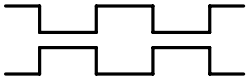	differential
P0400 = 2	A B	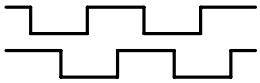	single ended
	A AN B BN	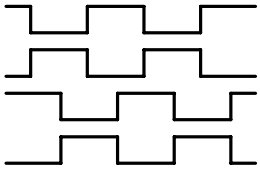	differential

Following table displays the setting the of the encoder DIPs on the encoder option modul which have to be set depending on the encoder type (TTL, HTL) and encoder output:

Type	Output	
	single ended	differential
TTL (e.g. 1XP8001-2)	111111	010101
HTL (e.g. 1XP8001-1)	101010	000000

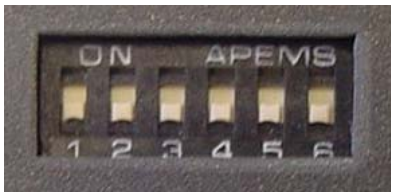

Caution:

P0400 = 1 (single channel encoder) will only allow operation in one direction. If operation in both directions is required, connect an encoder with 2 channels (A and B) and select setting 2. See the Operating Instructions of the encoder module for more information.

Note:

Encoders with zero pulse can also be connected, but the zero pulse is not used in MM4.

The term "quadrature" in setting 2 refers to two periodic functions separated by a quarter cycle or 90 degrees.

r0403	CO/BO: Encoder status word			Min: -	Level
		Datatype: U16	Unit: -	Def: -	3
	P-Group: COMMANDS			Max: -	

Displays status word of encoder (in bit format).

Bitfields:

Bit00	Encoder module active	0	NO	1	YES
Bit01	Encoder error	0	NO	1	YES
Bit02	Signal o.k.	0	NO	1	YES
Bit03	Encoder low speed loss	0	NO	1	YES
Bit04	HW timer used	0	NO	1	YES

Details:

See description of seven-segment display given in the "Introduction to MICROMASTER System Parameters" in this manual.

P0408[3]	**Encoder pulses per revolution**			**Min:** 2	Level
	CStat: CT	**Datatype:** U16	**Unit:** -	**Def:** 1024	**3**
	P-Group: ENCODER	**Active:** Immediately	**QuickComm.:** No	**Max:** 20000	

Specifies the number of encoder pulses per revolution.

Index:

P0408[0] : 1st. Drive data set (DDS)
P0408[1] : 2nd. Drive data set (DDS)
P0408[2] : 3rd. Drive data set (DDS)

Note:

The encoder resolution (pulses per revolution P0408) which may be entered will be limited by the max. pulse frequency of the encoder option board (f_max = 300 kHz).

The following equation calculates the encoder frequency depending on the encoder resoulution and the rotational speed (rpm). The encoder frequency has to be less than the max. pulse frequency:

$$f_{max} > f = \frac{p0408 \times rpm}{60}$$

P0492[3]	**Allowed frequency difference**			**Min:** 0.00	Level
	CStat: CT	**Datatype:** Float	**Unit:** Hz	**Def:** 10.00	**3**
	P-Group: ENCODER	**Active:** Immediately	**QuickComm.:** No	**Max:** 100.00	

Parameter P0492 is used for low and high frequency encoder loss detection (fault: F0090).

1. High frequency encoder loss detection:
   This condition occurs when the allowed frequency and the allowed difference of the frequency signals between samples, set in P0492 is exceeded.
   Condition:
   - Act. freq. > P0492 and f(t_2) - f(t_1) > P0492

2. Low frequency encoder loss detection:
   This condition occurs when the actual frequency is < P0492 when encoder loss occurs.
   Condition a):
   - r0061 = 0 and torque limit and then
   - r0061 = 0 with setpoint frequency > 0 for time > P0494

   Condition b):
   - Act. freq. < P0492 and f (t_2) < P0492 and ASIC detect channel B loss

Dependency:

This parameter is updated when motor start-up time P0345 is changed. There is a fixed delay of 40 ms before acting upon loss of encoder at high frequencies.

Caution:

P0492 = 0 (disabled):
When allowed frequency difference is set to 0, both the high frequency and low frequency encoder loss detection is disabled, thus encoder loss will not be detected.

If encoder loss detection is disabled and encoder loss occurs, then operation of the motor may become unstable.

P0494[3]	**Delay frequency loss reaction**			**Min:** 0	Level
	CStat: CUT	**Datatype:** U16	**Unit:** ms	**Def:** 10	**3**
	P-Group: ENCODER	**Active:** first confirm	**QuickComm.:** No	**Max:** 65000	

Used for low frequency encoder loss detection. If the motor shaft frequency is less than the value in P0492 then encoder loss is detected using a low frequency encoder loss detection algorithm. This parameter selects the delay between loss of encoder at low frequency and reaction to the encoder loss.

Index:

P0494[0] : 1st. Drive data set (DDS)
P0494[1] : 2nd. Drive data set (DDS)
P0494[2] : 3rd. Drive data set (DDS)

Dependency:

This parameter is updated when motor start-up time P0345 is changed.

Caution:

P0494 = 0 (disabled):
When the delay in P0494 is set to 0, then low frequency encoder loss detection is disabled and low frequency encoder loss cannot be detected (high frequency encoder loss detection will still operate if P0492 > 0).

If low frequency encoder loss detection is disabled and encoder should be lost at low frequency, then operation of motor may become unstable.

3.6 Application macros

P0500[3]	Technological application				Min: 0	Level
	CStat: CT	Datatype: U16	Unit: -		Def: 0	3
	P-Group: TECH_APL	Active: first confirm	QuickComm.: Yes		Max: 1	

Selects technological application. Sets control mode (P1300).

Possible Settings:

0 Constant torque
1 Pumps and fans

Index:

P0500[0] : 1st. Drive data set (DDS)
P0500[1] : 2nd. Drive data set (DDS)
P0500[2] : 3rd. Drive data set (DDS)

Dependency:

See parameter P0205

3.7 Motor temperature

P0601[3]	Motor temperature sensor				Min: 0	Level
	CStat: CUT	Datatype: U16	Unit: -		Def: 0	3
	P-Group: MOTOR	Active: first confirm	QuickComm.: No		Max: 2	

Selects motor temperature sensor.

Possible Settings:

0 No sensor
1 PTC thermistor
2 KTY84

Index:

P0601[0] : 1st. Drive data set (DDS)
P0601[1] : 2nd. Drive data set (DDS)
P0601[2] : 3rd. Drive data set (DDS)

Dependency:

If "no sensor" is selected, the motor temperature monitoring will be done based on the estimated value of the thermal motor model.

The temperature of the motor, when a thermal sensor is connected is calculated using the thermal motor model. When a KTY sensor is fitted, the loss of connection can be detected (Alarm F0015). Using the methods described above the monitoring of the temperature will automatically switch to the thermal model using values derived from the estimated value. Using a PTC sensor the temperature of the motor is calculated by the sensor in conjunction with the thermal model. This allows for redundancy of the monitoring process.

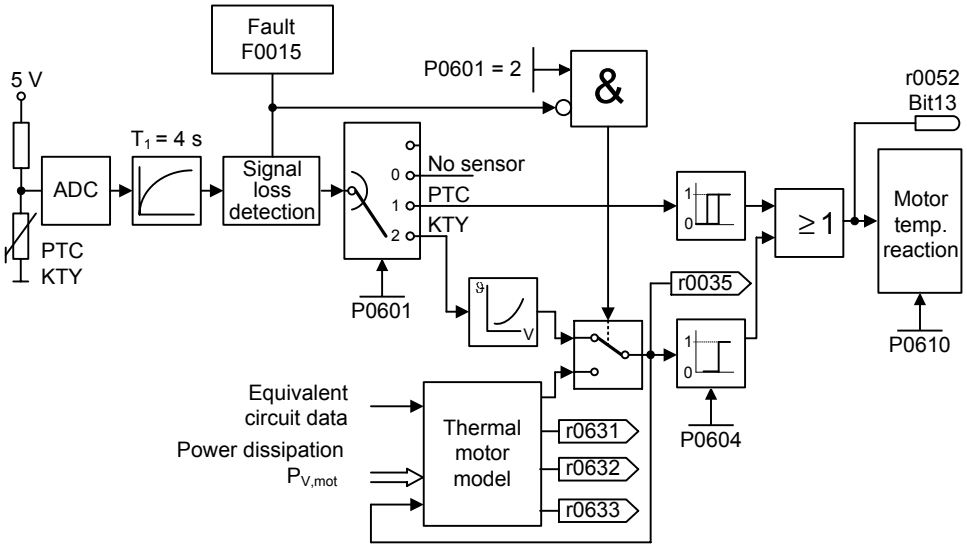

Thermal motor model:
The data, required for the thermal motor model, is estimated from the rating plate data entered during the quick commissioning. This data permits reliable, stable operation for standard Siemens motors. If required, parameter changes must be made for motors from third-party manufacturers. We always recommend that an automatic motor data identification run is made after quick commissioning so that the electrical equivalent circuit diagram data can be determined. This allows a more precise calculation of the losses which occur in the motor which has a positive impact on the accuracy of the thermal motor model.

PTC sensor:
A PTC temperature sensor (Positive-Temperature-Characteristic) is a resistor with a positive temperature characteristic which, at normal temperatures, has a low resistance value (50-100 Ohm). Normally, three PTC temperature sensors are connected in series in the motor (depending on the motor manufacturer), thus producing a "cold resistance value" ranging from 150 to 300 Ohm. PTC temperature sensors are also frequently referred to as cold conductors.

However, at a certain threshold temperature, the resistance rises rapidly. The threshold temperature is selected by the motor manufacturer in such a way that it corresponds to the nominal temperature value of the motor insulation. This allows the change in the resistance value to be deployed to protect the motor, as the PTCs are embedded in the motor windings. PTC temperature sensors are not suitable for measuring temperature.

When the PTC is connected to the control terminals 14 and 15 of the MM4. Once the selection motor temperature sensor has been activated by the setting P0601 = 1 (PTC sensor), the PTC temperature sensor then protects the motor by means of the trip device in the MM4.

Should the resistance value of 2000 Ohm be exceeded, the inverter displays error F0011 (motor overheating).

If the resistance value is below 100 Ohm, the error F0015 (no motor temperature signal) is then output.

This protects the motor from overheating and also from a sensor wire breakage.

The motor is additionally monitored by the thermal motor model in the inverter, thus providing a redundant system for monitoring the motor.

KTY84 sensor:
The sensor KTY84 is basically a semi-conductor thermo-sensor (diode), the resistance value of which varies from some 500 Ohm at 0°C to 2600 Ohm at 300°C. It has a positive temperature coefficient and, in contrast to the PTCs, has an almost linear temperature characteristic. The resistor behaviour is comparable to that of a measuring resistor with a very high temperature coefficient.

Note the following when connecting the polarity. Connect the sensor so that the diode is polarized in the operative direction. That means that the anode needs to be connected to terminal 14 = PTC A (+) and the cathode to terminal 15 = PTC B (-).

If the temperature monitoring function is activated with the setting P0601 = 2, the temperature of the sensor (thus that of the motor windings) is then written to parameter r0035.

The motor overheating warning threshold needs to be assigned with parameter P0604 (the works setting is 130°C). This warning threshold depends on the thermal class of the motor. Also refer to the table below in this context.

Extract of IEC 85	
Insulation class	End temperature
Y	90 °C
A	105 °C
E	120 °C
B	130 °C
F	155 °C
H	180 °C

The motor overheating disturbance threshold is automatically set by the inverter at 10% higher than the temperature declared in parameter P0604.

If the sensor KTY84 is activated, the motor temperature is then additionally calculated via the thermal motor model. Should the sensor KTY84 recognise a wire breakage, an alarm F0015 (loss of the motor temperature signal) is then generated and the thermal motor model is automatically switched to.

Connection failure:
If the connection to the PTC or KTY84 sensor becomes open circuit or short circuit, a fault will be indicated, and by default the drive will trip.

P0604[3] Threshold motor temperature

CStat:	CUT	**Datatype:** Float	**Unit:** °C	**Min:**	0.0	Level	
P-Group:	MOTOR	**Active:** Immediately	**QuickComm.:** No	**Def:**	130.0	**2**	
				Max:	200.0		

Enters warning threshold for motor temperature protection.

The trip temperature defined always 10 % higher than the warning level P0604. When act. motor temperature exeeds trip temperature than inverter trip as defined in P0610.

$\vartheta_{trip} = 1.1 \cdot \vartheta_{warn} = 1.1 \cdot P0604$ ϑ_{warn} : Warning threshold (P0604)
ϑ_{trip} : Trip threshold (max. permissible temperature)

Index:
P0604[0] : 1st. Drive data set (DDS)
P0604[1] : 2nd. Drive data set (DDS)
P0604[2] : 3rd. Drive data set (DDS)

Dependency:
This value should be at least 40°C greater than the motor ambient temperature P0625.

P0604 ≥ P0625 + 40 °C

Note:
Default value depends on P0300 (select motor type).

P0610[3]	**Motor temperature reaction**			**Min:** 0	Level
	CStat: CT	**Datatype:** U16	**Unit:** -	**Def:** 2	**3**
	P-Group: MOTOR	**Active:** first confirm	**QuickComm.:** No	**Max:** 2	

Defines reaction when motor temperature reaches warning threshold.

Possible Settings:

0 Warning, no reaction, no trip
1 Warning, Imax reduction, trip F0011
2 Warning, no reaction, trip F0011

Index:

P0610[0] : 1st. Drive data set (DDS)
P0610[1] : 2nd. Drive data set (DDS)
P0610[2] : 3rd. Drive data set (DDS)

Dependency:

$\vartheta_{trip} = 1.1 \cdot \vartheta_{warn} = 1.1 \cdot P0604$ ϑ_{warn} : Warning threshold (P0604)
ϑ_{trip} : Trip threshold (max. permissible temperature)

Note:

P0610 = 1:
If the max. permissible current Imax is reduced, this results in a lower output frequency.

The motor temperature depends on many factors. These factors include the size of the motor, the ambient temperature, the previous motor load and naturally the load current.
Because most motors are cooled by fans integrated in the motor and running at the motor speed, the speed of the motor is also important. Clearly a motor running with a high current (maybe due to boost) and a low speed, will overheat more quickly than one running at 50 or 60 Hz, full load. The MM4 take account of these factors.

P0625[3]	**Ambient motor temperature**			**Min:** -40.0	Level
	CStat: CUT	**Datatype:** Float	**Unit:** °C	**Def:** 20.0	**3**
	P-Group: MOTOR	**Active:** Immediately	**QuickComm.:** No	**Max:** 80.0	

Ambient temperature of motor. The parameter for the stator resistance P0350 and rotor resistance P0354 relate to the ambient temperature.

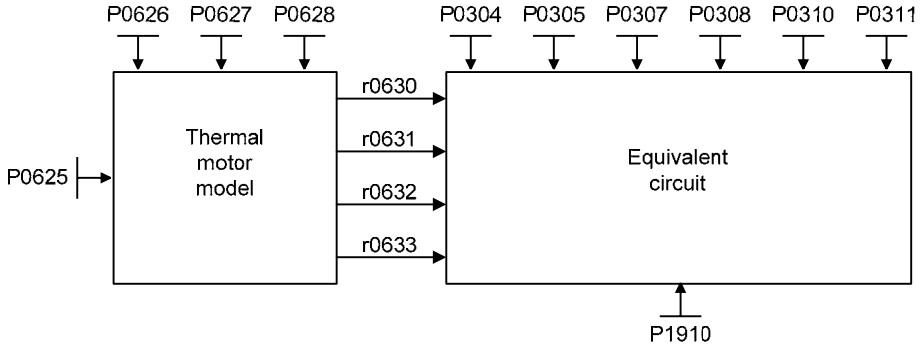

Index:

P0625[0] : 1st. Drive data set (DDS)
P0625[1] : 2nd. Drive data set (DDS)
P0625[2] : 3rd. Drive data set (DDS)

Note:

Following items should be considered when using P0625:
- The ambient temperature has to be entered prior to motor data identification.
- An accuracy of +/- 5°C is adequate.
- The motor data identification should be carried out on a cold motor (ambient temperature = stator temperature = rotor temperature).
- The highest accuracy at temperature adaption of the stator resistance and rotor resistance can be achieved by connecting a KTY84 sensor.

P0640[3]	**Motor overload factor [%]**			**Min:** 10.0	Level
	CStat: CUT	**Datatype:** Float	**Unit:** %	**Def:** 110.0	**3**
	P-Group: MOTOR	**Active:** Immediately	**QuickComm.:** Yes	**Max:** 400.0	

Defines motor overload current limit in [%] relative to P0305 (rated motor current).

Index:

P0640[0] : 1st. Drive data set (DDS)
P0640[1] : 2nd. Drive data set (DDS)
P0640[2] : 3rd. Drive data set (DDS)

Dependency:

Limited to maximum inverter current or to 400 % of rated motor current (P0305), whichever is the lower.

$$P0640_{max} = \frac{\min(r0209, 4 \cdot P0305)}{P0305} \cdot 100$$

Details:

See function diagram for current limitation.

3.8 Command source

P0700[3]	Selection of command source			Min: 0	Level
	CStat: CT	Datatype: U16	Unit: -	Def: 2	1
	P-Group: COMMANDS	Active: first confirm	QuickComm.: Yes	Max: 6	

Selects digital command source.

Possible Settings:

0 Factory default setting
1 BOP (keypad)
2 Terminal
4 USS on BOP link
5 USS on COM link
6 CB on COM link

Index:

P0700[0] : 1st. Command data set (CDS)
P0700[1] : 2nd. Command data set (CDS)
P0700[2] : 3rd. Command data set (CDS)

Example:

Changing from P0700 = 1 to P0700 = 2 sets all digital inputs to default settings.

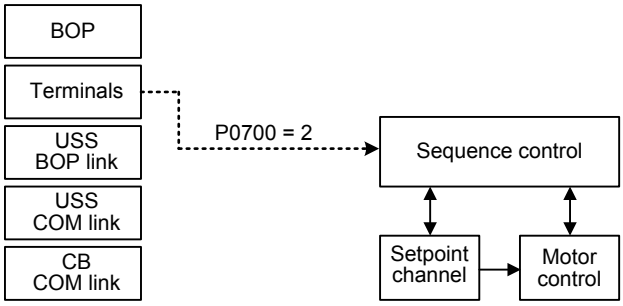

Notice:

Setting 4 (USS on BOP link) is also used for STARTER via PC connection kit.

Caution:

Be aware, by changing of parameter P0700 all BI parameters are reset to the default value or modified as listed in the table below.

Note:

Changing this parameter sets (to default) all settings on item selected (see table).

	P0700 = 0	P0700 = 1	P0700 = 2	P0700 = 4	P0700 = 5	P0700 = 6
P0701	1	0	1	0	0	0
P0702	12	0	12	0	0	0
P0703	9	9	9	9	9	9
P0704	15	15	15	15	15	15
P0705	15	15	15	15	15	15
P0706	15	15	15	15	15	15
P0707	0	0	0	0	0	0
P0708	0	0	0	0	0	0
P0731	52.3	52.3	52.3	52.3	52.3	52.3
P0732	52.7	52.7	52.7	52.7	52.7	52.7
P0733	0.0	0.0	0.0	0.0	0.0	0.0
P0800	0.0	0.0	0.0	0.0	0.0	0.0
P0801	0.0	0.0	0.0	0.0	0.0	0.0
P0840	722.0	19.0	722.0	2032.0	2036.0	2090.0
P0842	0.0	0.0	0.0	0.0	0.0	0.0
P0844	1.0	19.1	1.0	2032.1	2036.1	2090.1
P0845	19.1	19.1	19.1	19.1	19.1	19.1
P0848	1.0	1.0	1.0	2032.2	2036.2	2090.2
P0849	1.0	1.0	1.0	1.0	1.0	1.0
P0852	1.0	1.0	1.0	2032.3	2036.3	2090.3

	P0700 = 0	**P0700 = 1**	**P0700 = 2**	**P0700 = 4**	**P0700 = 5**	**P0700 = 6**
P1020	0.0	0.0	0.0	0.0	0.0	0.0
P1021	0.0	0.0	0.0	0.0	0.0	0.0
P1022	0.0	0.0	0.0	0.0	0.0	0.0
P1023	722.3	722.3	722.3	722.3	722.3	722.3
P1026	722.4	722.4	722.4	722.4	722.4	722.4
P1028	722.5	722.5	722.5	722.5	722.5	722.5
P1035	19.13	19.13	19.13	2032.13	2036.13	2090.13
P1036	19.14	19.14	19.14	2032.14	2036.14	2090.14
P1074	0.0	0.0	0.0	0.0	0.0	0.0
P1110	1.0	1.0	1.0	1.0	1.0	1.0
P1113	722.1	0.0	722.1	2032.11	2036.11	2090.11
P1140	1.0	1.0	1.0	2032.4	2036.4	2090.4
P1141	1.0	1.0	1.0	2032.5	2036.5	2090.5
P1142	1.0	1.0	1.0	2032.6	2036.6	2090.6
P1230	0.0	0.0	0.0	0.0	0.0	0.0
P1266	0.0	0.0	0.0	0.0	0.0	0.0
P2103	722.2	722.2	722.2	722.2	722.2	722.2
P2104	0.0	0.0	0.0	2032.7	2036.7	2090.7
P2106	1.0	1.0	1.0	1.0	1.0	1.0
P2200	0.0	0.0	0.0	0.0	0.0	0.0
P2220	0.0	0.0	0.0	0.0	0.0	0.0
P2221	0.0	0.0	0.0	0.0	0.0	0.0
P2222	0.0	0.0	0.0	0.0	0.0	0.0
P2223	722.3	722.3	722.3	722.3	722.3	722.3
P2226	722.4	722.4	722.4	722.4	722.4	722.4
P2228	722.5	722.5	722.5	722.5	722.5	722.5
P2235	19.13	19.13	19.13	2032.13	2036.13	2090.13
P2236	19.14	19.14	19.14	2032.14	2036.14	2090.14

The following parameters are not overwritten when changing P0700:

P0810	P0811	P0820	P0821	P2810	P2812	P2814
P2816	P2818	P2820	P2822	P2824	P2826	P2828
P2830	P2832	P2834	P2837	P2840	P2843	P2846
P2849	P2854	P2859	P2864			

3.9 Digital inputs

P0701[3]	Function of digital input 1			Min: 0	Level
	CStat: CT	Datatype: U16	Unit: -	Def: 1	2
	P-Group: COMMANDS	Active: first confirm	QuickComm.: No	Max: 99	

Selects function of digital input 1.

DIN channel (e.g. DIN1 - PNP (P0725 = 1))

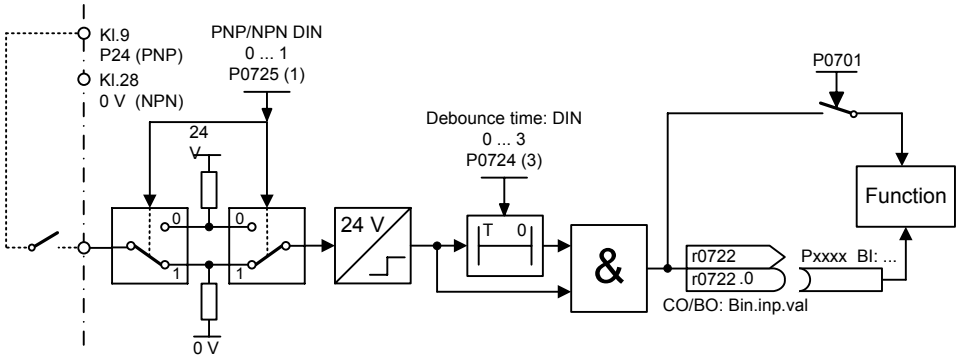

Possible Settings:

0 Digital input disabled
1 ON/OFF1
2 ON reverse /OFF1
3 OFF2 - coast to standstill
4 OFF3 - quick ramp-down
9 Fault acknowledge
10 Reserved
11 Reserved
12 Reverse
13 MOP up (increase frequency)
14 MOP down (decrease frequency)
15 Fixed setpoint (Direct selection)
16 Fixed setpoint (Direct selection + ON)
17 Fixed setpoint (Binary coded selection + ON)
25 DC brake enable
26 Reserved
27 Enable PID
28 Bypass mode command input
29 External trip
33 Disable additional freq setpoint
99 Enable BICO parameterization

Index:

P0701[0] : 1st. Command data set (CDS)
P0701[1] : 2nd. Command data set (CDS)
P0701[2] : 3rd. Command data set (CDS)

Dependency:

Setting 99 (enable BICO parameterization) requires
- P0700 command source or
- P0010 = 1, P3900 = 1, 2 or 3 quick commissioning or
- P0010 = 30, P0970 = 1 factory reset in order to reset.

Notice:

Setting 99 (BICO) for expert use only. To change back the setting 99 in any of the DIN function parameters it is necessary to alter P0700. Settings 3 (OFF2) and 4 (OFF3) are low active.

P0702[3]	**Function of digital input 2**			**Min:** 0	Level
	CStat: CT	**Datatype:** U16	**Unit:** -	**Def:** 12	**2**
	P-Group: COMMANDS	**Active:** first confirm	**QuickComm.:** No	**Max:** 99	

Selects function of digital input 2.

Possible Settings:

0 Digital input disabled
1 ON/OFF1
2 ON reverse /OFF1
3 OFF2 - coast to standstill
4 OFF3 - quick ramp-down
9 Fault acknowledge
10 Reserved
11 Reserved
12 Reverse
13 MOP up (increase frequency)
14 MOP down (decrease frequency)
15 Fixed setpoint (Direct selection)
16 Fixed setpoint (Direct selection + ON)
17 Fixed setpoint (Binary coded selection + ON)
25 DC brake enable
26 Reserved
27 Enable PID
28 Bypass mode command input
29 External trip
33 Disable additional freq setpoint
99 Enable BICO parameterization

Index:

P0702[0] : 1st. Command data set (CDS)
P0702[1] : 2nd. Command data set (CDS)
P0702[2] : 3rd. Command data set (CDS)

Details:

See P0701 (function of digital input1).

P0703[3]	**Function of digital input 3**			**Min:** 0	Level
	CStat: CT	**Datatype:** U16	**Unit:** -	**Def:** 9	**2**
	P-Group: COMMANDS	**Active:** first confirm	**QuickComm.:** No	**Max:** 99	

Selects function of digital input 3.

Possible Settings:

0 Digital input disabled
1 ON/OFF1
2 ON reverse /OFF1
3 OFF2 - coast to standstill
4 OFF3 - quick ramp-down
9 Fault acknowledge
10 Reserved
11 Reserved
12 Reverse
13 MOP up (increase frequency)
14 MOP down (decrease frequency)
15 Fixed setpoint (Direct selection)
16 Fixed setpoint (Direct selection + ON)
17 Fixed setpoint (Binary coded selection + ON)
25 DC brake enable
26 Reserved
27 Enable PID
28 Bypass mode command input
29 External trip
33 Disable additional freq setpoint
99 Enable BICO parameterization

Index:

P0703[0] : 1st. Command data set (CDS)
P0703[1] : 2nd. Command data set (CDS)
P0703[2] : 3rd. Command data set (CDS)

Details:

See P0701 (function of digital input 1).

P0704[3]	**Function of digital input 4**			**Min:** 0	Level
	CStat: CT	**Datatype:** U16	**Unit:** -	**Def:** 15	**2**
	P-Group: COMMANDS	**Active:** first confirm	**QuickComm.:** No	**Max:** 99	

Selects function of digital input 4.

Possible Settings:

0 Digital input disabled
1 ON/OFF1
2 ON reverse /OFF1
3 OFF2 - coast to standstill
4 OFF3 - quick ramp-down
9 Fault acknowledge
10 Reserved
11 Reserved
12 Reverse
13 MOP up (increase frequency)
14 MOP down (decrease frequency)
15 Fixed setpoint (Direct selection)
16 Fixed setpoint (Direct selection + ON)
17 Fixed setpoint (Binary coded selection + ON)
25 DC brake enable
26 Reserved
27 Enable PID
28 Bypass mode command input
29 External trip
33 Disable additional freq setpoint
99 Enable BICO parameterization

Index:

P0704[0] : 1st. Command data set (CDS)
P0704[1] : 2nd. Command data set (CDS)
P0704[2] : 3rd. Command data set (CDS)

Details:

See P0701 (function of digital input 1).

P0705[3]	**Function of digital input 5**			**Min:** 0	Level
	CStat: CT	**Datatype:** U16	**Unit:** -	**Def:** 15	**2**
	P-Group: COMMANDS	**Active:** first confirm	**QuickComm.:** No	**Max:** 99	

Selects function of digital input 5.

Possible Settings:

0 Digital input disabled
1 ON/OFF1
2 ON reverse /OFF1
3 OFF2 - coast to standstill
4 OFF3 - quick ramp-down
9 Fault acknowledge
10 Reserved
11 Reserved
12 Reverse
13 MOP up (increase frequency)
14 MOP down (decrease frequency)
15 Fixed setpoint (Direct selection)
16 Fixed setpoint (Direct selection + ON)
25 DC brake enable
26 Reserved
27 Enable PID
28 Bypass mode command input
29 External trip
33 Disable additional freq setpoint
99 Enable BICO parameterization

Index:

P0705[0] : 1st. Command data set (CDS)
P0705[1] : 2nd. Command data set (CDS)
P0705[2] : 3rd. Command data set (CDS)

Details:

See P0701 (function of digital input 1).

P0706[3]	**Function of digital input 6**			**Min:** 0	Level
	CStat: CT	**Datatype:** U16	**Unit:** -	**Def:** 15	**2**
	P-Group: COMMANDS	**Active:** first confirm	**QuickComm.:** No	**Max:** 99	

Selects function of digital input 6.

Possible Settings:

0 Digital input disabled
1 ON/OFF1
2 ON reverse /OFF1
3 OFF2 - coast to standstill
4 OFF3 - quick ramp-down
9 Fault acknowledge
10 Reserved
11 Reserved
12 Reverse
13 MOP up (increase frequency)
14 MOP down (decrease frequency)
15 Fixed setpoint (Direct selection)
16 Fixed setpoint (Direct selection + ON)
25 DC brake enable
26 Reserved
27 Enable PID
28 Bypass mode command input
29 External trip
33 Disable additional freq setpoint
99 Enable BICO parameterization

Index:

P0706[0] : 1st. Command data set (CDS)
P0706[1] : 2nd. Command data set (CDS)
P0706[2] : 3rd. Command data set (CDS)

Details:

See P0701 (function of digital input 1).

P0707[3]	**Function of digital input 7**			**Min:** 0	Level
	CStat: CT	**Datatype:** U16	**Unit:** -	**Def:** 0	**3**
	P-Group: COMMANDS	**Active:** first confirm	**QuickComm.:** No	**Max:** 99	

Selects function of digital input 7 (via analog input).

Possible Settings:

0 Digital input disabled
1 ON/OFF1
2 ON reverse /OFF1
3 OFF2 - coast to standstill
4 OFF3 - quick ramp-down
9 Fault acknowledge
10 Reserved
11 Reserved
12 Reverse
13 MOP up (increase frequency)
14 MOP down (decrease frequency)
25 DC brake enable
26 Reserved
28 Bypass mode command input
29 External trip
33 Disable additional freq setpoint
99 Enable BICO parameterization

Index:

P0707[0] : 1st. Command data set (CDS)
P0707[1] : 2nd. Command data set (CDS)
P0707[2] : 3rd. Command data set (CDS)

Note:

Signals above 4 V are active, signals below 1,6 V are inactive.

Details:

See P0701 (function of digital input 1).

P0708[3]	**Function of digital input 8**			**Min:** 0	Level
	CStat: CT	**Datatype:** U16	**Unit:** -	**Def:** 0	**3**
	P-Group: COMMANDS	**Active:** first confirm	**QuickComm.:** No	**Max:** 99	

Selects function of digital input 8 (via analog input)

Possible Settings:

0 Digital input disabled
1 ON/OFF1
2 ON reverse /OFF1
3 OFF2 - coast to standstill
4 OFF3 - quick ramp-down
9 Fault acknowledge
10 Reserved
11 Reserved
12 Reverse
13 MOP up (increase frequency)
14 MOP down (decrease frequency)
25 DC brake enable
26 Reserved
28 Bypass mode command input
29 External trip
33 Disable additional freq setpoint
99 Enable BICO parameterization

Index:

P0708[0] : 1st. Command data set (CDS)
P0708[1] : 2nd. Command data set (CDS)
P0708[2] : 3rd. Command data set (CDS)

Note:

Signals above 4 V are active, signals below 1,6 V are inactive.

Details:

See P0701 (function of digital input 1).

P0718	**CO/BO: Hand / Auto**			**Min:** 0	Level
	CStat: CUT	**Datatype:** U16	**Unit:** -	**Def:** 0	**3**
	P-Group: COMMANDS	**Active:** Immediately	**QuickComm.:** No	**Max:** 1	

From a defaulted drive
0 = Auto operation i.e. the control from the analogue and digital inputs
1 = Hand operation i.e. the control comes from the BOP

Using the Hand / Auto buttons on the BOP will change this parameter.

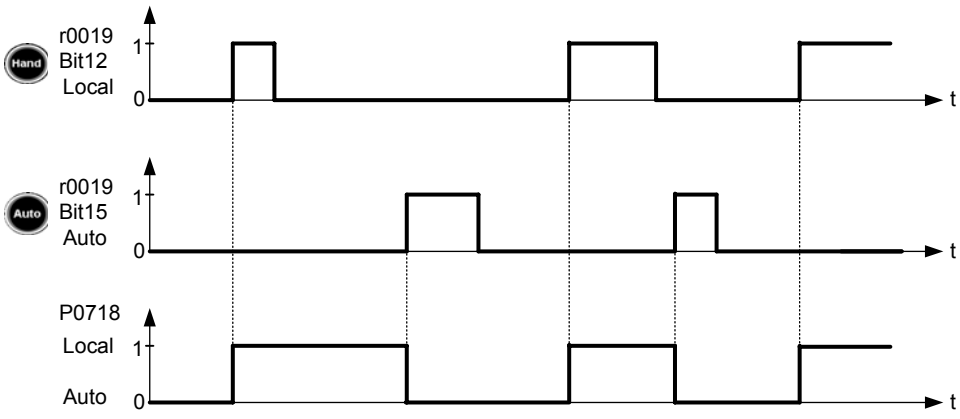

Default:

P0810 = 718:0 ⇒ Local/Auto ⇔ CDS1/CDS2

P0718 = 0 : P0700[0] = 2 (Terminal)
P1000[0] = 2 (ADC)

P0718 = 1 : P0700[1] = 1 (BOP)
P1000[1] = 1 (MOP)

Note:

Changeing CDS values will effect the operation of Hand / Auto

P0719[3]	**Selection of cmd. & freq. setp.**			**Min:** 0	Level
	CStat: CT	**Datatype:** U16	**Unit:** -	**Def:** 0	**3**
	P-Group: COMMANDS	**Active:** first confirm	**QuickComm.:** No	**Max:** 66	

Central switch to select control command source for inverter.

Switches command and setpoint source between freely programmable BICO parameters and fixed command/setpoint profiles. Command and setpoint sources can be changed independently.

The tens digit chooses the command source and the units digit chooses the setpoint source.

Possible Settings:

0	Cmd = BICO parameter	Setpoint = BICO parameter
1	Cmd = BICO parameter	Setpoint = MOP setpoint
2	Cmd = BICO parameter	Setpoint = Analog setpoint
3	Cmd = BICO parameter	Setpoint = Fixed frequency
4	Cmd = BICO parameter	Setpoint = USS on BOP link
5	Cmd = BICO parameter	Setpoint = USS on COM link
6	Cmd = BICO parameter	Setpoint = CB on COM link
10	Cmd = BOP	Setpoint = BICO parameter
11	Cmd = BOP	Setpoint = MOP setpoint
12	Cmd = BOP	Setpoint = Analog setpoint
13	Cmd = BOP	Setpoint = Fixed frequency
15	Cmd = BOP	Setpoint = USS on COM link
16	Cmd = BOP	Setpoint = CB on COM link
40	Cmd = USS on BOP link	Setpoint = BICO parameter
41	Cmd = USS on BOP link	Setpoint = MOP setpoint
42	Cmd = USS on BOP link	Setpoint = Analog setpoint
43	Cmd = USS on BOP link	Setpoint = Fixed frequency
44	Cmd = USS on BOP link	Setpoint = USS on BOP link
45	Cmd = USS on BOP link	Setpoint = USS on COM link
46	Cmd = USS on BOP link	Setpoint = CB on COM link
50	Cmd = USS on COM link	Setpoint = BICO parameter
51	Cmd = USS on COM link	Setpoint = MOP setpoint
52	Cmd = USS on COM link	Setpoint = Analog setpoint
53	Cmd = USS on COM link	Setpoint = Fixed frequency
54	Cmd = USS on COM link	Setpoint = USS on BOP link
55	Cmd = USS on COM link	Setpoint = USS on COM link
60	Cmd = CB on COM link	Setpoint = BICO parameter
61	Cmd = CB on COM link	Setpoint = MOP setpoint
62	Cmd = CB on COM link	Setpoint = Analog setpoint
63	Cmd = CB on COM link	Setpoint = Fixed frequency
64	Cmd = CB on COM link	Setpoint = USS on BOP link
66	Cmd = CB on COM link	Setpoint = CB on COM link

Index:

P0719[0] : 1st. Command data set (CDS)
P0719[1] : 2nd. Command data set (CDS)
P0719[2] : 3rd. Command data set (CDS)

Note:

BICO connections made previously remain unchanged.

r0720	**Number of digital inputs**			**Min:** -	Level
		Datatype: U16	**Unit:** -	**Def:** -	**3**
	P-Group: COMMANDS			**Max:** -	

Displays number of digital inputs.

r0722	**CO/BO: Binary input values**			**Min:** -	Level
		Datatype: U16	**Unit:** -	**Def:** -	**3**
	P-Group: COMMANDS			**Max:** -	

Displays status of digital inputs.

Bitfields:

Bit00	Digital input 1	0	OFF	1	ON
Bit01	Digital input 2	0	OFF	1	ON
Bit02	Digital input 3	0	OFF	1	ON
Bit03	Digital input 4	0	OFF	1	ON
Bit04	Digital input 5	0	OFF	1	ON
Bit05	Digital input 6	0	OFF	1	ON
Bit06	Digital input 7 (via ADC 1)	0	OFF	1	ON
Bit07	Digital input 8 (via ADC 2)	0	OFF	1	ON

Note:

Segment is lit when signal is active.

P0724	**Debounce time for digital inputs**			**Min:** 0	Level
	CStat: CT	**Datatype:** U16	**Unit:** -	**Def:** 3	**3**
	P-Group: COMMANDS	**Active:** Immediately	**QuickComm.:** No	**Max:** 3	

Defines debounce time (filtering time) used for digital inputs.

Possible Settings:

0 No debounce time
1 2.5 ms debounce time
2 8.2 ms debounce time
3 12.3 ms debounce time

P0725	**PNP / NPN digital inputs**			**Min:** 0	Level
	CStat: CT	**Datatype:** U16	**Unit:** -	**Def:** 1	**3**
	P-Group: COMMANDS	**Active:** Immediately	**QuickComm.:** No	**Max:** 1	

Switches between active high (PNP) and active low (NPN). This is valid for all digital inputs simultaneously. The following is valid by using the internal supply:

Possible Settings:

0 NPN mode ==> low active
1 PNP mode ==> high active

Value:

NPN: Terminals 5/6/7/8/16/17 must be connected via terminal 28 (O V).
PNP: Terminals 5/6/7/8/16/17 must be connected via terminal 9 (24 V).

3.10 Digital outputs

r0730	**Number of digital outputs**			**Min:** -	Level **3**
		Datatype: U16	**Unit:** -	**Def:** -	
	P-Group: COMMANDS			**Max:** -	

Displays number of digital outputs (relays).

P0731[3]	**BI: Function of digital output 1**			**Min:** 0:0	Level **2**
	CStat: CUT	**Datatype:** U32	**Unit:** -	**Def:** 52:3	
	P-Group: COMMANDS	**Active:** first confirm	**QuickComm.:** No	**Max:** 4000:0	

Defines source of digital output 1.

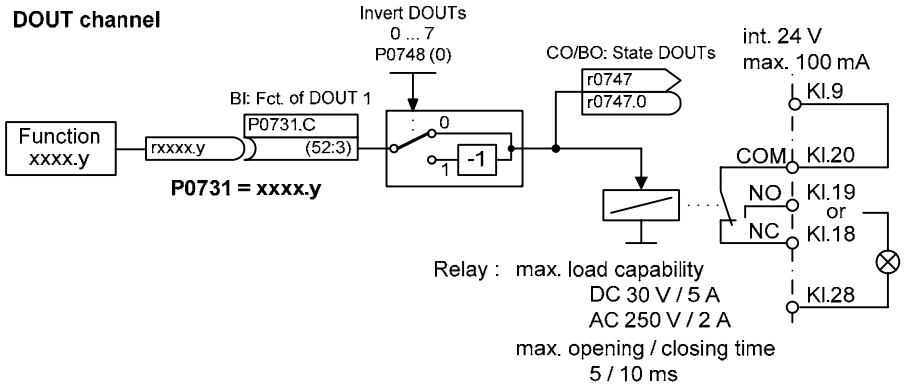

Index:

P0731[0] : 1st. Command data set (CDS)
P0731[1] : 2nd. Command data set (CDS)
P0731[2] : 3rd. Command data set (CDS)

Common Settings:

52.0	Drive ready	0	Closed
52.1	Drive ready to run	0	Closed
52.2	Drive running	0	Closed
52.3	Drive fault active	0	Closed
52.4	OFF2 active	1	Closed
52.5	OFF3 active	1	Closed
52.6	Switch on inhibit active	0	Closed
52.7	Drive warning active	0	Closed
52.8	Deviation setpoint/actual value	1	Closed
52.9	PZD control (Process Data Control)	0	Closed
52.A	Maximum frequency reached	0	Closed
52.B	Warning: Motor current limit	1	Closed
52.C	Motor holding brake (MHB) active	0	Closed
52.D	Motor overload	1	Closed
52.E	Motor running direction right	0	Closed
52.F	Inverter overload	1	Closed
53.0	DC brake active	0	Closed
53.1	Act. freq. f_act > P2167 (f_off)	0	Closed
53.2	Act. freq. f_act <= P1080 (f_min)	0	Closed
53.3	Act. current r0027 > P2170	0	Closed
53.4	Act. freq. f_act > P2155 (f_1)	0	Closed
53.5	Act. freq. f_act <= P2155 (f_1)	0	Closed
53.6	Act. freq. f_act >= setpoint	0	Closed
53.7	Act. Vdc r0026 < P2172	0	Closed
53.8	Act. Vdc r0026 > P2172	0	Closed
53.A	PID output r2294 == P2292 (PID_min)	0	Closed
53.B	PID output r2294 == P2291 (PID_max)	0	Closed

P0732[3]	**BI: Function of digital output 2**			**Min:** 0:0	Level
	CStat: CUT	**Datatype:** U32	**Unit:** -	**Def:** 52:7	**2**
	P-Group: COMMANDS	**Active:** first confirm	**QuickComm.:** No	**Max:** 4000:0	

Defines source of digital output 2.

Index:

P0732[0] : 1st. Command data set (CDS)
P0732[1] : 2nd. Command data set (CDS)
P0732[2] : 3rd. Command data set (CDS)

Common Settings:

52.0	Drive ready	0	Closed
52.1	Drive ready to run	0	Closed
52.2	Drive running	0	Closed
52.3	Drive fault active	0	Closed
52.4	OFF2 active	1	Closed
52.5	OFF3 active	1	Closed
52.6	Switch on inhibit active	0	Closed
52.7	Drive warning active	0	Closed
52.8	Deviation setpoint/actual value	1	Closed
52.9	PZD control (Process Data Control)	0	Closed
52.A	Maximum frequency reached	0	Closed
52.B	Warning: Motor current limit	1	Closed
52.C	Motor holding brake (MHB) active	0	Closed
52.D	Motor overload	1	Closed
52.E	Motor running direction right	0	Closed
52.F	Inverter overload	1	Closed
53.0	DC brake active	0	Closed
53.1	Act. freq. f_act > P2167 (f_off)	0	Closed
53.2	Act. freq. f_act <= P1080 (f_min)	0	Closed
53.3	Act. current r0027 > P2170	0	Closed
53.4	Act. freq. f_act > P2155 (f_1)	0	Closed
53.5	Act. freq. f_act <= P2155 (f_1)	0	Closed
53.6	Act. freq. f_act >= setpoint	0	Closed
53.7	Act. Vdc r0026 < P2172	0	Closed
53.8	Act. Vdc r0026 > P2172	0	Closed
53.A	PID output r2294 == P2292 (PID_min)	0	Closed
53.B	PID output r2294 == P2291 (PID_max)	0	Closed

P0733[3]	**BI: Function of digital output 3**			**Min:** 0:0	Level
	CStat: CUT	**Datatype:** U32	**Unit:** -	**Def:** 0:0	**2**
	P-Group: COMMANDS	**Active:** first confirm	**QuickComm.:** No	**Max:** 4000:0	

Defines source of digital output 3.

Index:

P0733[0] : 1st. Command data set (CDS)
P0733[1] : 2nd. Command data set (CDS)
P0733[2] : 3rd. Command data set (CDS)

Common Settings:

52.0	Drive ready	0	Closed
52.1	Drive ready to run	0	Closed
52.2	Drive running	0	Closed
52.3	Drive fault active	0	Closed
52.4	OFF2 active	1	Closed
52.5	OFF3 active	1	Closed
52.6	Switch on inhibit active	0	Closed
52.7	Drive warning active	0	Closed
52.8	Deviation setpoint/actual value	1	Closed
52.9	PZD control (Process Data Control)	0	Closed
52.A	Maximum frequency reached	0	Closed
52.B	Warning: Motor current limit	1	Closed
52.C	Motor holding brake (MHB) active	0	Closed
52.D	Motor overload	1	Closed
52.E	Motor running direction right	0	Closed
52.F	Inverter overload	1	Closed
53.0	DC brake active	0	Closed
53.1	Act. freq. f_act > P2167 (f_off)	0	Closed
53.2	Act. freq. f_act <= P1080 (f_min)	0	Closed
53.3	Act. current r0027 > P2170	0	Closed
53.4	Act. freq. f_act > P2155 (f_1)	0	Closed
53.5	Act. freq. f_act <= P2155 (f_1)	0	Closed
53.6	Act. freq. f_act >= setpoint	0	Closed
53.7	Act. Vdc r0026 < P2172	0	Closed
53.8	Act. Vdc r0026 > P2172	0	Closed
53.A	PID output r2294 == P2292 (PID_min)	0	Closed
53.B	PID output r2294 == P2291 (PID_max)	0	Closed

r0747	**CO/BO: State of digital outputs**			**Min:** -	Level
		Datatype: U16	**Unit:** -	**Def:** -	**3**
	P-Group: COMMANDS			**Max:** -	

Displays status of digital outputs (also includes inversion of digital outputs via P0748).

Bitfields:

```
Bit00   Digital output 1 energized          0  NO      1  YES
Bit01   Digital output 2 energized          0  NO      1  YES
Bit02   Digital output 3 energized          0  NO      1  YES
```

Dependency:

Bit 0 = 0 :
Relay de-energized / contacts open

Bit 0 = 1 :
Relay energized / contacts closed

P0748	**Invert digital outputs**			**Min:** 0	Level
	CStat: CUT	**Datatype:** U16	**Unit:** -	**Def:** 0	**3**
	P-Group: COMMANDS	**Active:** first confirm	**QuickComm.:** No	**Max:** 7	

Defines high and low states of relay for a given function.

Bitfields:

```
Bit00   Invert digital output 1             0  NO      1  YES
Bit01   Invert digital output 2             0  NO      1  YES
Bit02   Invert digital output 3             0  NO      1  YES
```

3.11 Analog inputs

r0750	**Number of ADCs**			**Min:** -	Level
		Datatype: U16	**Unit:** -	**Def:** -	**3**
	P-Group: TERMINAL			**Max:** -	

Displays number of analog inputs available.

r0751	**CO/BO: Status word of ADC**			**Min:** -	Level
		Datatype: U16	**Unit:** -	**Def:** -	**3**
	P-Group: TERMINAL			**Max:** -	

Displays status of analog input.

Bitfields:

```
Bit00   Signal lost on ADC 1                0  NO      1  YES
Bit01   Signal lost on ADC 2                0  NO      1  YES
Bit07   Signal lost on ADC 1 inverted       0  NO      1  YES
Bit08   Signal lost on ADC 2 inverted       0  NO      1  YES
```

Dependency:

The following limitations/secondary conditions apply for the wire breakage monitoring:

- For P0756, the monitoring must be activated
- Width of the ADC deadzone P0761 > 0
- Wire breakage / signal loss F0080 is detected if the ADC input quantity is less than 0.5 * P0761.

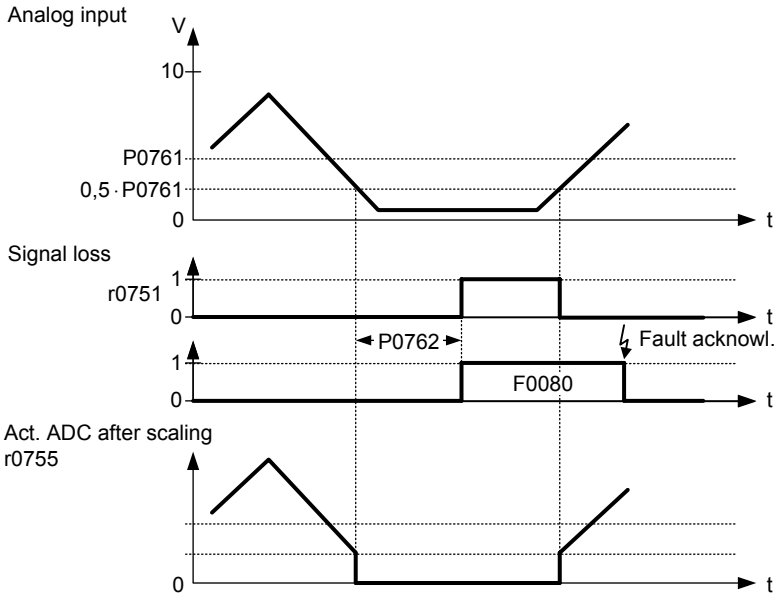

r0752[2]	**Act. input of ADC [V] or [mA]**			**Min:** -	Level
		Datatype: Float	**Unit:** -	**Def:** -	**2**
	P-Group: TERMINAL			**Max:** -	

Displays smoothed analog input value in volts before the characteristic block.

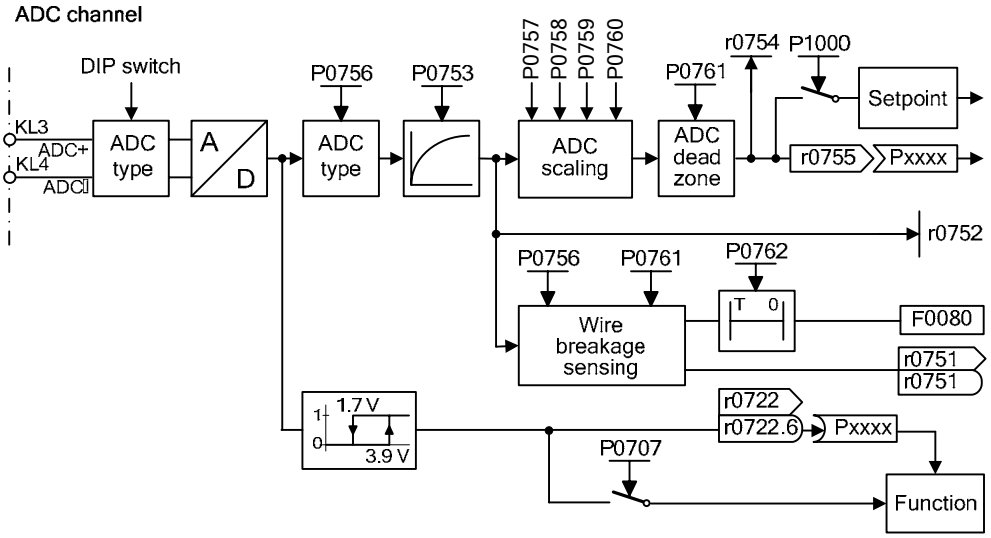

Index:

r0752[0] : Analog input 1 (ADC 1)
r0752[1] : Analog input 2 (ADC 2)

P0753[2]	**Smooth time ADC**			**Min:** 0	Level
	CStat: CUT	**Datatype:** U16	**Unit:** ms	**Def:** 3	**3**
	P-Group: TERMINAL	**Active:** first confirm	**QuickComm.:** No	**Max:** 10000	

Defines filter time (PT1 filter) in [ms] for analog input.

Index:

P0753[0] : Analog input 1 (ADC 1)
P0753[1] : Analog input 2 (ADC 2)

Note:

Increasing this time (smooth) reduces jitter but slows down response to the analog input.

P0753 = 0 : No filtering

r0754[2]	**Act. ADC value after scaling [%]**			**Min:** -	Level
		Datatype: Float	**Unit:** %	**Def:** -	**2**
	P-Group: TERMINAL			**Max:** -	

Shows smoothed value of analog input in [%] after scaling block.

Index:

r0754[0] : Analog input 1 (ADC 1)
r0754[1] : Analog input 2 (ADC 2)

Dependency:

P0757 to P0760 define range (ADC scaling).

r0755[2]	**CO: Act. ADC after scal. [4000h]**		**Min:** -	Level
	Datatype: I16	**Unit:** -	**Def:** -	**3**
	P-Group: TERMINAL		**Max:** -	

Displays analog input, scaled using ASPmin and ASPmax.

Analog setpoint (ASP) from the analog scaling block can vary from min. analog setpoint (ASPmin) to a max. analog setpoint (ASPmax) as shown in P0757 (ADC scaling).

The largest magnitude (value without sign) of ASPmin and ASPmax defines the scaling of 16384.

By associating parameter r0755 with an internal value (e.g. frequency setpoint), a scaled value is calculated internally by the MM4. The frequency value is calculated using the following equation:

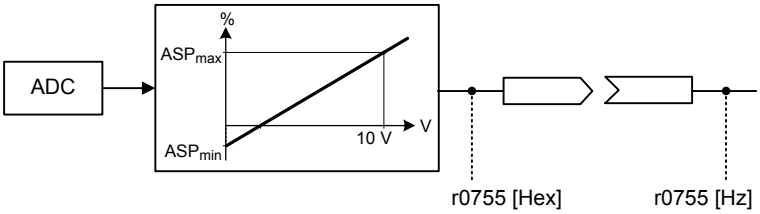

$$r0755\ [Hz] = \frac{r0755\ [Hex]}{4000\ [Hex]} \cdot P2000 \cdot \frac{\max\left(\left|ASP_{max}\right|, \left|ASP_{min}\right|\right)}{100\%}$$

Index:

r0755[0] : Analog input 1 (ADC 1)
r0755[1] : Analog input 2 (ADC 2)

Example:

Case a:
- ASPmin = 300 %, ASPmax = 100 % then 16384 represents 300 %.
- This parameter will vary from 5461 to 16384.

Case b:
- ASPmin = -200 %, ASPmax = 100 % then 16384 represents 200 %.
- This parameter will vary from -16384 to +8192.

$$4000\ h = \max\left(\left|ASP_{max}\right|, \left|ASP_{min}\right|\right)$$

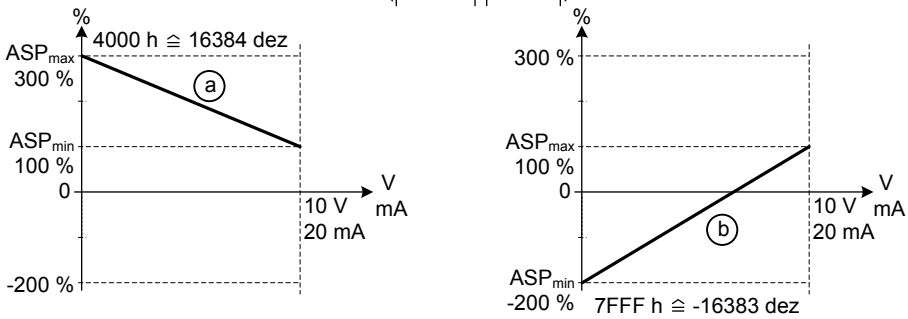

Note:
- This value is used as an input to analog BICO connectors.
- ASPmax represents the highest analog setpoint (this may be at 10 V).
- ASPmin represents the lowest analog setpoint (this may be at 0 V).

Details:

See parameters P0757 to P0760 (ADC scaling)

P0756[2]	**Type of ADC**			**Min:** 0	Level
	CStat: CT	**Datatype:** U16	**Unit:** -	**Def:** 0	**2**
	P-Group: TERMINAL	**Active:** first confirm	**QuickComm.:** No	**Max:** 4	

Defines type of analog input and also enables analog input monitoring.

To switch over from voltage to current analog input it is not sufficient to merely modify parameter P0756. Rather, the DIPs on the terminal board must also be set to the correct position. The DIP settings are as follows:
- OFF = voltage input (10 V)
- ON = current input (20 mA)

Allocation of DIPs to analog inputs is as follows:
- DIP on left (DIP 1) = Analog input 1
- DIP on right (DIP 2) = Analog input 2

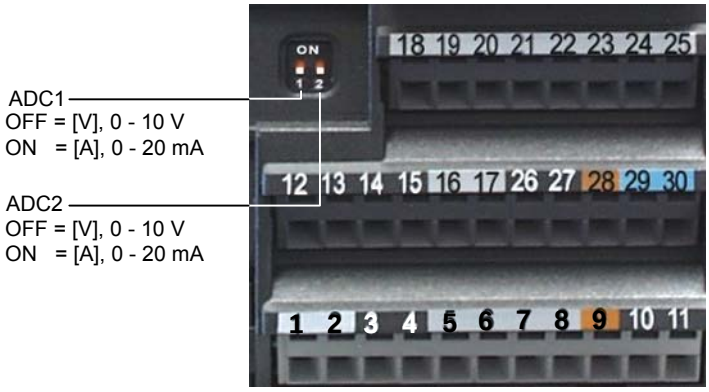

Possible Settings:

0 Unipolar voltage input (0 to +10 V)
1 Unipolar voltage input with monitoring (0 to 10 V)
2 Unipolar current input (0 to 20 mA)
3 Unipolar current input with monitoring (0 to 20 mA)
4 Bipolar voltage input (-10 V to +10 V)

Index:

P0756[0] : Analog input 1 (ADC 1)
P0756[1] : Analog input 2 (ADC 2)

Notice:

When monitoring is enabled and a deadband defined (P0761), a fault condition will be generated (F0080) if the analog input voltage falls below 50 % of the deadband voltage.

On account of h/w restrictions it is not possible to select the bipolar voltage (see Enum declaration) for analog input 2 (P0756[1] = 4).

Details:

See P0757 to P0760 (ADC scaling).

P0757[2]	**Value x1 of ADC scaling [V / mA]**			**Min:** -20	Level
	CStat: CUT	**Datatype:** Float	**Unit:** -	**Def:** 0	**2**
	P-Group: TERMINAL	**Active:** first confirm	**QuickComm.:** No	**Max:** 20	

Parameters P0757 - P0760 configure the input scaling as shown in the diagram:

P0756 = 0 ... 3, P0761 = 0

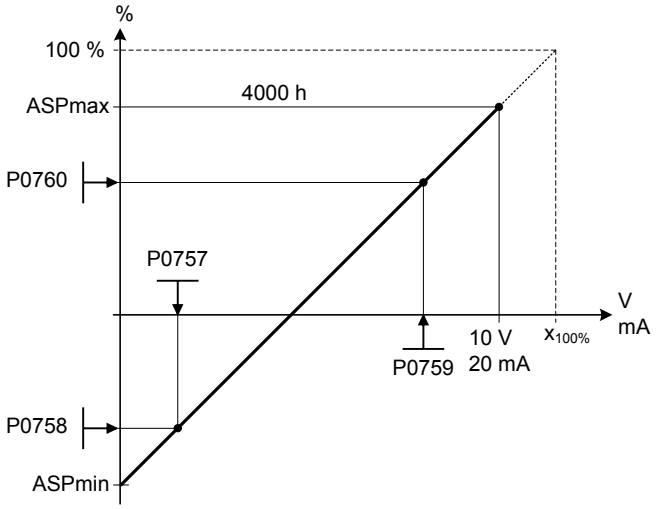

Where:
- Analog setpoints represent a [%] of the normalized frequency in P2000.
- Analog setpoints may be larger than 100 %.
- ASPmax represents highest analog setpoint (this may be at 10 V or 20 mA).
- ASPmin represents lowest analog setpoint (this may be at 0 V or 20 mA).
- Default values provide a scaling of 0 V or 0 mA = 0 %, and 10 V or 20 mA = 100 %.

P0756 = 4, P0761 = 0

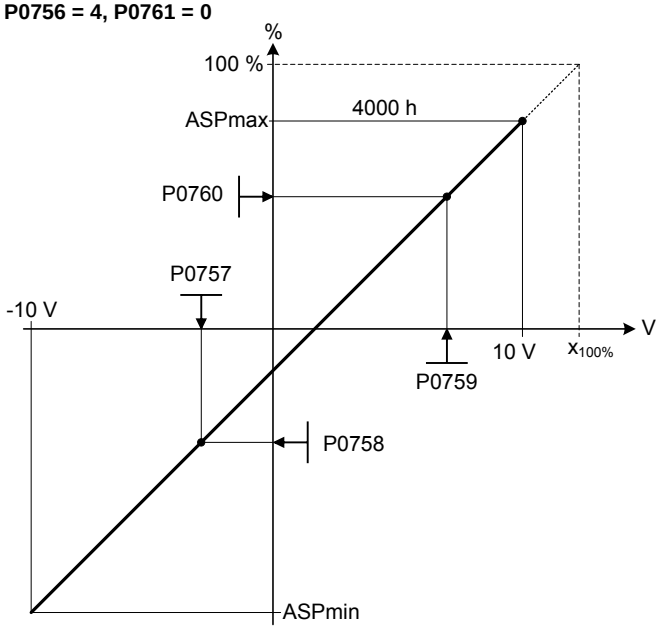

Index:

P0757[0] : Analog input 1 (ADC 1)
P0757[1] : Analog input 2 (ADC 2)

Note:

The ADC-linear characteristic is described by 4 coordinates, based on a two-point equation:

$$\frac{y - P0758}{x - P0757} = \frac{P0760 - P0758}{P0759 - P0757}$$

For calculations the point-gradient form (offset and gradient) is more advantageous:

$$y = m \cdot x + y_0$$

The transformation between these two forms is given by:

$$m = \frac{P0760 - P0758}{P0759 - P0757} \qquad y_0 = \frac{P0758 \cdot P0759 - P0757 \cdot P0760}{P0759 - P0757}$$

For scaling of the input the value of y_max and x_min has to be determined. This is done by the following equations:

$$x_{min} = \frac{P0760 \cdot P0757 - P0758 \cdot P0759}{P0760 - P0758}$$

$$y_{max} = (x_{max} - x_{min}) \cdot \frac{P0760 - P0758}{P0759 - P0757}$$

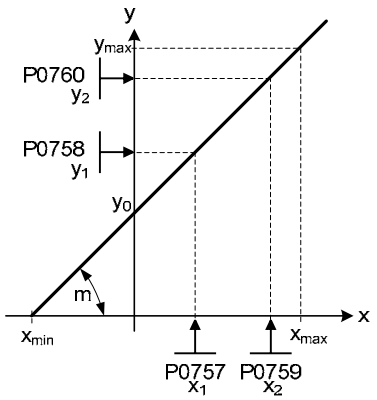

Notice:

The value x2 of ADC scaling P0759 must be greater than the value x1 of ADC scaling P0757.

P0758[2]	**Value y1 of ADC scaling**			**Min:** -99999.9	Level
	CStat: CUT	**Datatype:** Float	**Unit:** %	**Def:** 0.0	**2**
	P-Group: TERMINAL	**Active:** first confirm	**QuickComm.:** No	**Max:** 99999.9	

Sets value of Y1 in [%] as described in P0757 (ADC scaling)

Index:

P0758[0] : Analog input 1 (ADC 1)
P0758[1] : Analog input 2 (ADC 2)

Dependency:

Affects P2000 to P2003 (reference frequency, voltage, current or torque) depending on which setpoint is to be generated.

P0759[2]	**Value x2 of ADC scaling [V / mA]**			**Min:** -20	Level
	CStat: CUT	**Datatype:** Float	**Unit:** -	**Def:** 10	**2**
	P-Group: TERMINAL	**Active:** first confirm	**QuickComm.:** No	**Max:** 20	

Sets value of X2 as described in P0757 (ADC scaling).

Index:

P0759[0] : Analog input 1 (ADC 1)
P0759[1] : Analog input 2 (ADC 2)

Notice:

The value x2 of ADC scaling P0759 must be greater than the value x1 of ADC scaling P0757.

P0760[2]	**Value y2 of ADC scaling**			**Min:** -99999.9	Level
	CStat: CUT	**Datatype:** Float	**Unit:** %	**Def:** 100.0	**2**
	P-Group: TERMINAL	**Active:** first confirm	**QuickComm.:** No	**Max:** 99999.9	

Sets value of Y2 in [%] as described in P0757 (ADC scaling).

Index:

P0760[0] : Analog input 1 (ADC 1)
P0760[1] : Analog input 2 (ADC 2)

Dependency:

Affects P2000 to P2003 (reference frequency, voltage, current or torque) depending on which setpoint is to be generated.

P0761[2]	**Width of ADC deadband [V / mA]**			**Min:** 0	Level
	CStat: UT	**Datatype:** Float	**Unit:** -	**Def:** 0	**3**
	P-Group: TERMINAL	**Active:** first confirm	**QuickComm.:** No	**Max:** 20	

Defines width of deadband on analog input. The diagrams below explain its use.

Index:

P0761[0] : Analog input 1 (ADC 1)
P0761[1] : Analog input 2 (ADC 2)

Example:

The below example produces a 2 to 10 V analog input 0 to 50 Hz (ADC value 2 to 10 V, 0 to 50 Hz):

- P2000 = 50 Hz
- P0759 = 8 V P0760 = 75 %
- P0757 = 2 V P0758 = 0 %
- P0761 = 2 V
- P0756 = 0 or 1

P0761 > 0 and (0 < P0758 < P0760 or 0 > P0758 > P0760)

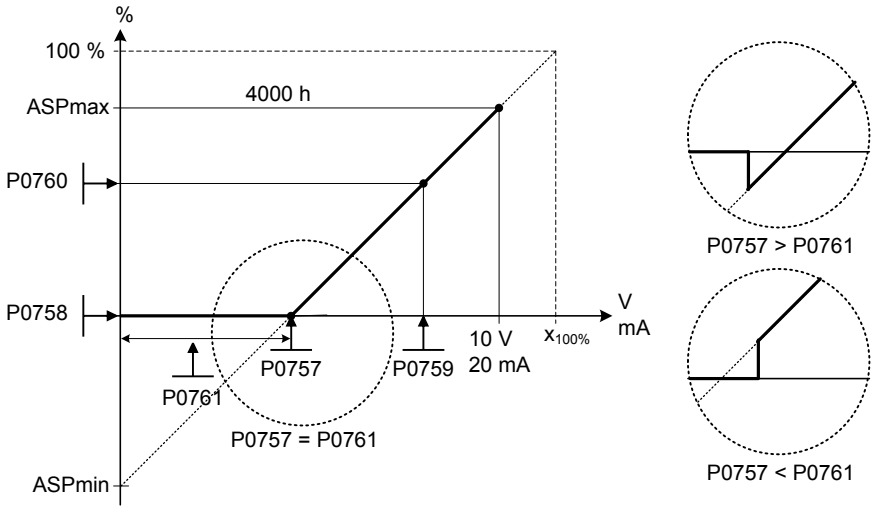

The below example produces a 0 to 10 V analog input (-50 to +50 Hz) with center zero and a "holding point" 0.2 V wide (0.1 V to each side of center, ADC value 0 to 10 V, -50 to +50 Hz):

- P2000 = 50 Hz
- P0759 = 8 V P0760 = 75 %
- P0757 = 2 V P0758 = -75 %
- P0761 = 0.1 V
- P0756 = 0 or 1

P0761 > 0 and P0758 < 0 < P0760

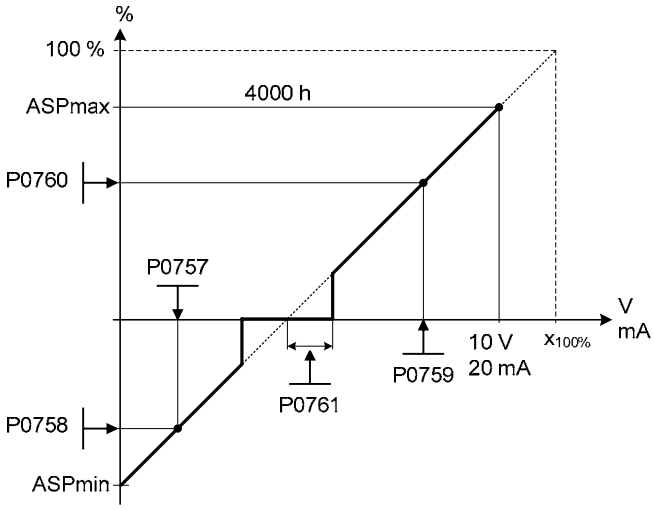

ADC value -10 to +10 V (-50 to +50 Hz):
The below example produces a -10 to +10 V analog input (-50 to +50 Hz) with center zero and a "holding point" 0.2 V wide (0.1 V to each side of center).

P0756 = 4 and P0761 > 0 and P0758 < 0 < P0760

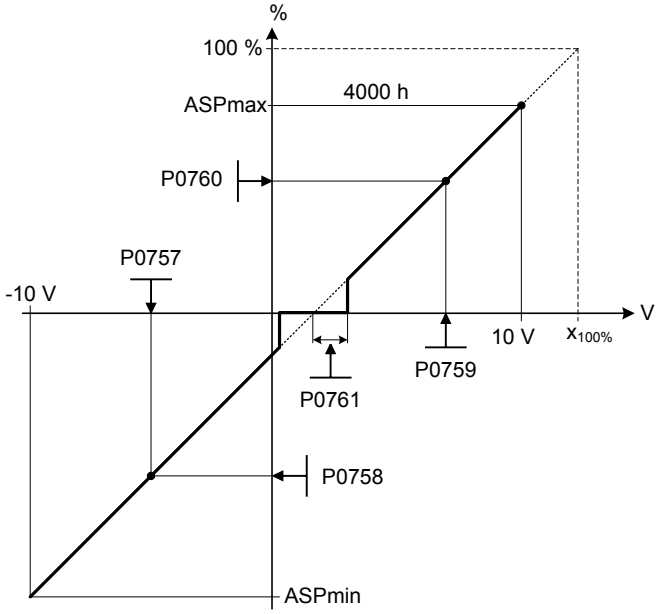

Note:

P0761[x] = 0 : No deadband active.

Deadband starts from 0 V to value of P0761, if both values of P0758 and P0760 (y coordinates of ADC scaling) are positive or negative respectively. However, deadband is active in both directions from point of intersection (x axis with ADC scaling curve), if sign of P0758 and P0760 are opposite.

Min. frequency P1080 should be zero when using center zero setup. There is no hysteresis at the end of the deadband.

P0762[2]	**Delay for loss of signal action**			**Min:** 0	Level
	CStat: CUT	**Datatype:** U16	**Unit:** ms	**Def:** 10	**3**
	P-Group: TERMINAL	**Active:** Immediately	**QuickComm.:** No	**Max:** 10000	

Defines time delay between loss of analog setpoint and appearance of fault code F0080.

Index:

P0762[0] : Analog input 1 (ADC 1)
P0762[1] : Analog input 2 (ADC 2)

Note:

Expert users can choose the desired reaction to F0080 (default is OFF2).

3.12 Analog outputs

r0770	**Number of DACs**			**Min:** -		Level
		Datatype: U16	**Unit:** -	**Def:** -		**3**
	P-Group: TERMINAL			**Max:** -		

Displays number of analog outputs available.

P0771[2]	**CI: DAC**			**Min:** 0:0		Level
	CStat: CUT	**Datatype:** U32	**Unit:** -	**Def:** 21:0		**2**
	P-Group: TERMINAL	**Active:** first confirm	**QuickComm.:** No	**Max:** 4000:0		

Defines function of the 0 - 20 mA analog output.

Index:

P0771[0] : Analog output 1 (DAC 1)
P0771[1] : Analog output 2 (DAC 2)

Common Settings:

21 CO: Act. frequency (scaled to P2000)
24 CO: Act. output frequency (scaled to P2000)
25 CO: Act. output voltage (scaled to P2001)
26 CO: Act. filtered DC-link volt. (scaled to P2001)
27 CO: Act. output current (scaled to P2002)

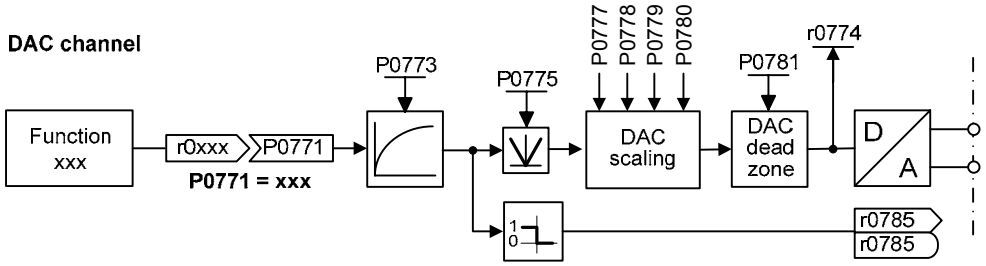

P0773[2]	**Smooth time DAC**			**Min:** 0		Level
	CStat: CUT	**Datatype:** U16	**Unit:** ms	**Def:** 2		**3**
	P-Group: TERMINAL	**Active:** first confirm	**QuickComm.:** No	**Max:** 1000		

Defines smoothing time [ms] for analog output signal. This parameter enables smoothing for DAC using a PT1 filter.

Index:

P0773[0] : Analog output 1 (DAC 1)
P0773[1] : Analog output 2 (DAC 2)

Dependency:

P0773 = 0: Deactivates filter.

r0774[2]	**Act. DAC value [mA]**			**Min:** -		Level
		Datatype: Float	**Unit:** -	**Def:** -		**3**
	P-Group: TERMINAL			**Max:** -		

Shows value of analog output in [mA] after filtering and scaling.

Index:

r0774[0] : Analog output 1 (DAC 1)
r0774[1] : Analog output 2 (DAC 2)

P0775[2]	**Permit absolute value**			**Min:** 0		Level
	CStat: CT	**Datatype:** U16	**Unit:** -	**Def:** 0		**2**
	P-Group: TERMINAL	**Active:** first confirm	**QuickComm.:** No	**Max:** 1		

Decides if the absolute value of the analog output is used. If enabled, this parameter will take the absolute value of the value to be outputed. If the value was originally negative then the corresponding bit in R0783 is set, otherwise it is cleared.

Possible Settings:

0 OFF
1 ON

Index:

P0775[0] : Analog output 1 (DAC 1)
P0775[1] : Analog output 2 (DAC 2)

P0776[2]	**Type of DAC**			**Min:** 0	Level
	CStat: CT	**Datatype:** U16	**Unit:** -	**Def:** 0	**2**
	P-Group: TERMINAL	**Active:** first confirm	**QuickComm.:** No	**Max:** 1	

Defines type of analog output.

Possible Settings:

0 Current output
1 Voltage output

Index:

P0776[0] : Analog output 1 (DAC 1)
P0776[1] : Analog output 2 (DAC 2)

Note:

The analog output is designed as a current output with a range of 0...20 mA.

For a voltage output with a range of 0...10 V an external resistor of 500 Ohms has to be connected at the terminals (12/13 or 26/27).

P0777[2]	**Value x1 of DAC scaling**			**Min:** -99999.0	Level
	CStat: CUT	**Datatype:** Float	**Unit:** %	**Def:** 0.0	**2**
	P-Group: TERMINAL	**Active:** first confirm	**QuickComm.:** No	**Max:** 99999.0	

Defines x1 output characteristic in [%]. Scaling block is responsible for adjustment of output value defined in P0771 (DAC connector input).

Parameters of DAC scaling block (P0777 ... P0781) work as follows:

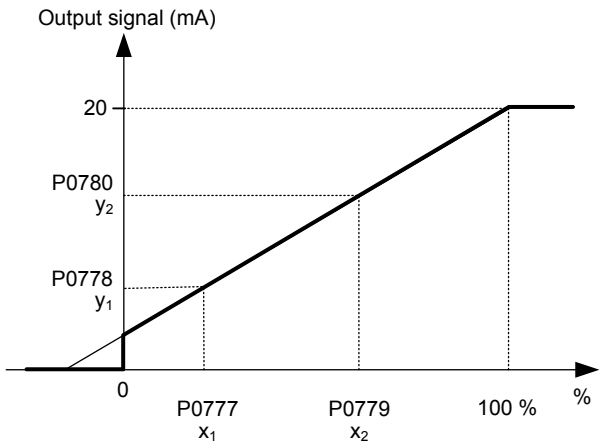

Where:
Points P1 (x1, y1) and P2 (x2, y2) can be chosen freely.

Index:

P0777[0] : Analog output 1 (DAC 1)
P0777[1] : Analog output 2 (DAC 2)

Example:

The default values of the scaling block provides a scaling of:
P1: 0.0 % = 0 mA
P2: 100.0 % = 20 mA

Dependency:

Affects P2000 to P2003 (referency frequency, voltage, current or torque) depending on which setpoint is to be generated.

Note:

The DAC-linear characteristic is described by 4 coordinates, based on a two-point equation:

$$\frac{y - P0778}{x - P0777} = \frac{P0780 - P0778}{P0779 - P0777}$$

For calculations the point-gradient form (offset and gradient) is more advantageous:

$$y = m \cdot x + y_0$$

The transformation between these two forms is given by:

$$m = \frac{P0780 - P0778}{P0779 - P0777} \qquad y_0 = \frac{P0778 \cdot P0779 - P0777 \cdot P0780}{P0779 - P0777} \leq \left| 200\,\% \right|$$

For scaling of the input the value of y_max and x_min has to be determined. This is done by the following equations:

$$x_{min} = \frac{P0780 \cdot P0777 - P0778 \cdot P0779}{P0780 - P0778}$$

$$y_{max} = (x_{max} - x_{min}) \cdot \frac{P0780 - P0778}{P0779 - P0777}$$

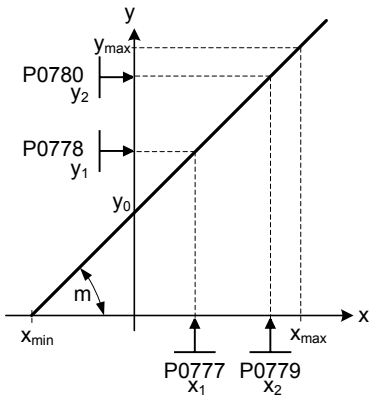

P0778[2]	**Value y1 of DAC scaling**				Level
	CStat: CUT	**Datatype:** Float	**Unit:** -	**Min:** 0	**2**
	P-Group: TERMINAL	**Active:** first confirm	**QuickComm.:** No	**Def:** 0	
				Max: 20	

Defines y1 of output characteristic.

Index:

P0778[0] : Analog output 1 (DAC 1)
P0778[1] : Analog output 2 (DAC 2)

P0779[2]	**Value x2 of DAC scaling**				Level
				Min: -99999.0	**2**
	CStat: CUT	**Datatype:** Float	**Unit:** %	**Def:** 100.0	
	P-Group: TERMINAL	**Active:** first confirm	**QuickComm.:** No	**Max:** 99999.0	

Defines x2 of output characteristic in [%].

Index:

P0779[0] : Analog output 1 (DAC 1)
P0779[1] : Analog output 2 (DAC 2)

Dependency:

Affects P2000 to P2003 (referency frequency, voltage, current or torque) depending on which setpoint is to be generated.

P0780[2]	**Value y2 of DAC scaling**				Level
				Min: 0	**2**
	CStat: CUT	**Datatype:** Float	**Unit:** -	**Def:** 20	
	P-Group: TERMINAL	**Active:** first confirm	**QuickComm.:** No	**Max:** 20	

Defines y2 of output characteristic.

Index:

P0780[0] : Analog output 1 (DAC 1)
P0780[1] : Analog output 2 (DAC 2)

P0781[2]	**Width of DAC deadband**			**Min:** 0	Level
	CStat: CUT	**Datatype:** Float	**Unit:** -	**Def:** 0	**3**
	P-Group: TERMINAL	**Active:** first confirm	**QuickComm.:** No	**Max:** 20	

Sets width of dead-band in [mA] for analog output.

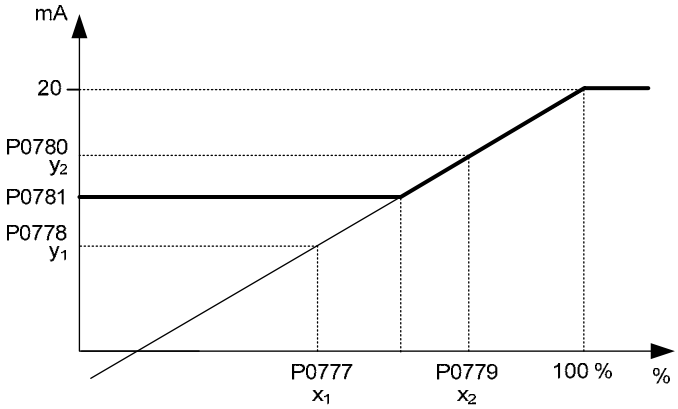

Index:

P0781[0] : Analog output 1 (DAC 1)
P0781[1] : Analog output 2 (DAC 2)

r0785	**CO/BO: Status word of DAC**			**Min:** -	Level
		Datatype: U16	**Unit:** -	**Def:** -	**2**
	P-Group: TERMINAL			**Max:** -	

Displays status of analog output. Bit 0 indicates that the value of analog output 1 is negative.

Bit 1 indicates that the value of analog output 2 is negative.

Bitfields:

```
Bit00   Analog output 1 -ve                    0  NO        1  YES
Bit01   Analog output 2 -ve                    0  NO        1  YES
```

3.13 Parameter / command / drive data set

P0800[3]	**BI: Download parameter set 0**			**Min:** 0:0	Level
	CStat: CT	**Datatype:** U32	**Unit:** -	**Def:** 0:0	**4**
	P-Group: COMMANDS	**Active:** first confirm	**QuickComm.:** No	**Max:** 4000:0	

Defines source of command to start download of parameter set 0 from attached AOP.

Index:

P0800[0] : 1st. Command data set (CDS)
P0800[1] : 2nd. Command data set (CDS)
P0800[2] : 3rd. Command data set (CDS)

Common Settings:

722.0 = Digital input 1 (requires P0701 to be set to 99, BICO)
722.1 = Digital input 2 (requires P0702 to be set to 99, BICO)
722.2 = Digital input 3 (requires P0703 to be set to 99, BICO)
722.3 = Digital input 4 (requires P0704 to be set to 99, BICO)
722.4 = Digital input 5 (requires P0705 to be set to 99, BICO)
722.5 = Digital input 6 (requires P0706 to be set to 99, BICO)

Dependency:

1. The parameter set 0 can only be downloaded in conjunction with the AOP
2. Establish communications between the frequency inverter and AOP
3. The frequency inverter must be selected using the AOP if the AOP is connected at the COM link interface (RS485)
4. Select the frequency inverter state "Ready" (r0002 = 1)
5. Signal from P0800:
   0 = Do not download.
   1 = Start to download parameter set 0 from the AOP.

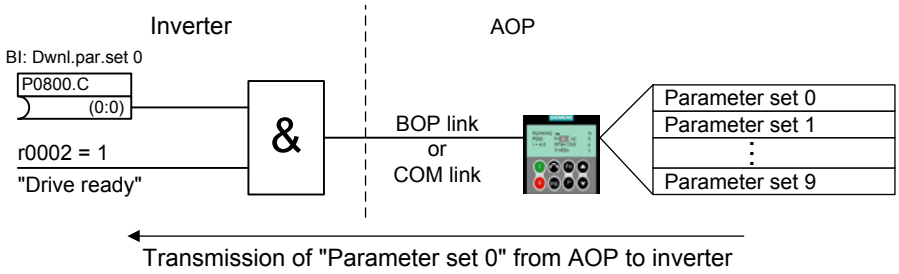

P0801[3]	**BI: Download parameter set 1**			**Min:** 0:0	Level
	CStat: CT	**Datatype:** U32	**Unit:** -	**Def:** 0:0	**4**
	P-Group: COMMANDS	**Active:** first confirm	**QuickComm.:** No	**Max:** 4000:0	

Defines sources of command to start download of parameter set 1 from attached AOP.

Index:

P0801[0] : 1st. Command data set (CDS)
P0801[1] : 2nd. Command data set (CDS)
P0801[2] : 3rd. Command data set (CDS)

Common Settings:

722.0 = Digital input 1 (requires P0701 to be set to 99, BICO)
722.1 = Digital input 2 (requires P0702 to be set to 99, BICO)
722.2 = Digital input 3 (requires P0703 to be set to 99, BICO)
722.3 = Digital input 4 (requires P0704 to be set to 99, BICO)
722.4 = Digital input 5 (requires P0705 to be set to 99, BICO)
722.5 = Digital input 6 (requires P0706 to be set to 99, BICO)

Note:

See parameter P0800

P0809[3]	**Copy command data set (CDS)**			**Min:** 0	Level
	CStat: CT	**Datatype:** U16	**Unit:** -	**Def:** 0	**3**
	P-Group: COMMANDS	**Active:** first confirm	**QuickComm.:** No	**Max:** 2	

Calls Copy Command Data Set (CDS) function.

The list of all Command Data Sets (CDS) are shown in the opening instructions of the Parameter List (PLI).

Index:

P0809[0] : Copy from CDS
P0809[1] : Copy to CDS
P0809[2] : Start copy

Example:

Copying of all values from CDS1 to CDS3 can be accomplished by the following procedure:

P0809[0] = 0 1. CDS
P0809[1] = 2 3. CDS
P0809[2] = 1 Start copy

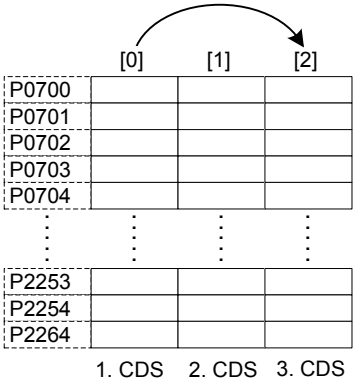

Note:

Start value in index 2 is automatically reset to 0 after execution of function.

P0810	**BI: CDS bit 0 (Local / Remote)**			**Min:** 0:0	Level
	CStat: CUT	**Datatype:** U32	**Unit:** -	**Def:** 718:0	**3**
	P-Group: COMMANDS	**Active:** first confirm	**QuickComm.:** No	**Max:** 4095:0	

Selects command source from which to read Bit 0 for selecting a command data set (CDS).

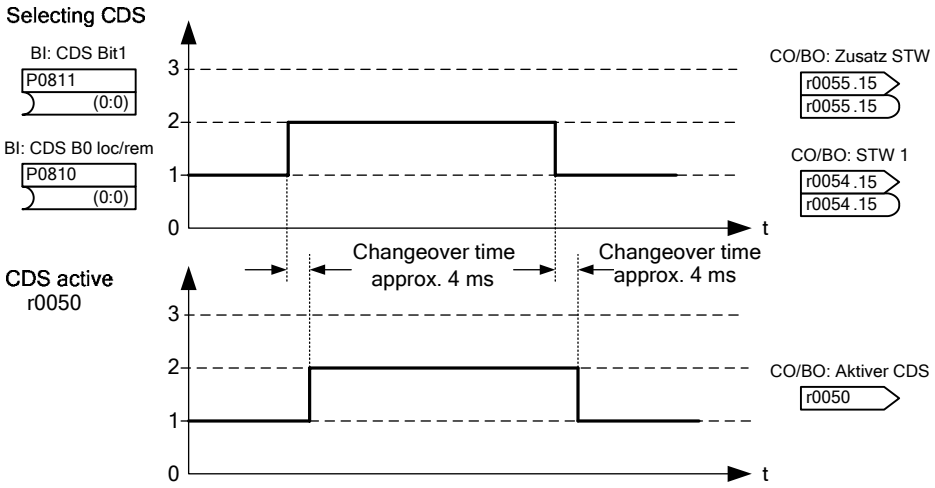

The actual active command data set (CDS) is displayed in parameter r0050.

	selected CDS		active CDS
	r0055 Bit15	r0054 Bit15	r0050
1. CDS	0	0	0
2. CDS	0	1	1
3. CDS	1	0	2
3. CDS	1	1	2

Common Settings:

722.0 = Digital input 1 (requires P0701 to be set to 99, BICO)
722.1 = Digital input 2 (requires P0702 to be set to 99, BICO)
722.2 = Digital input 3 (requires P0703 to be set to 99, BICO)
722.3 = Digital input 4 (requires P0704 to be set to 99, BICO)
722.4 = Digital input 5 (requires P0705 to be set to 99, BICO)
722.5 = Digital input 6 (requires P0706 to be set to 99, BICO)
722.6 = Digital input 7 (via analog input 1, requires P0707 to be set to 99)
722.7 = Digital input 8 (via analog input 2, requires P0708 to be set to 99)

Example:

Typical procedure for CDS switch-over:

- CDS1: Command source via terminal and setpoint source via analog input (ADC)
- CDS2: Command source via BOP and setpoint source via MOP
- CDS switch-over takes place via digital input 4 (DIN 4)

Steps:

1. Commissioning of inverter / drive
2. CDS1 set parameters (P0700[0] = 2 and P1000[0] = 2)
3. Connect P0810 (P0811 if necessary) with the source of CDS switch-over (P0704[0] = 99, P0810 = 722.3)
4. Copy CDS1 to CDS2 (P0809[0] = 0, P0809[1] = 1, P0809[2] = 2)
5. Change CDS2 parameter as required (set parameters for CDS2 [P0700=1 and P1000=1])

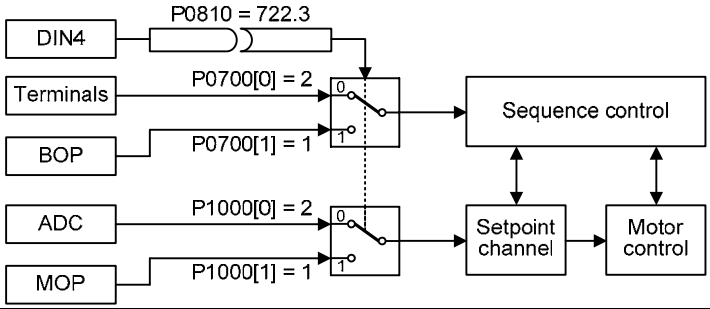

Note:

P0811 is also relevant for command data set (CDS) set selection.

P0811	**BI: CDS bit 1**				**Min:** 0:0	Level
	CStat: CUT	**Datatype:** U32	**Unit:** -		**Def:** 0:0	**2**
	P-Group: COMMANDS	**Active:** first confirm	**QuickComm.:** No		**Max:** 4095:0	

Selects command source from which to read Bit 1 for selecting a command data set (see P0810).

Common Settings:

722.0 = Digital input 1 (requires P0701 to be set to 99, BICO)
722.1 = Digital input 2 (requires P0702 to be set to 99, BICO)
722.2 = Digital input 3 (requires P0703 to be set to 99, BICO)
722.3 = Digital input 4 (requires P0704 to be set to 99, BICO)
722.4 = Digital input 5 (requires P0705 to be set to 99, BICO)
722.5 = Digital input 6 (requires P0706 to be set to 99, BICO)
722.6 = Digital input 7 (via analog input 1, requires P0707 to be set to 99)
722.7 = Digital input 8 (via analog input 2, requires P0708 to be set to 99)

Note:

P0810 is also relevant for command data set (CDS) selection.

P0819[3]	**Copy drive data set (DDS)**			**Min:** 0	Level
	CStat: CT	**Datatype:** U16	**Unit:** -	**Def:** 0	**2**
	P-Group: COMMANDS	**Active:** first confirm	**QuickComm.:** No	**Max:** 2	

Calls Copy Drive Data Set (DDS) function.

The list of all Drive Data Sets (DDS) are shown in the opening instructions of the Parameter List (PLI).

Index:

P0819[0] : Copy from DDS
P0819[1] : Copy to DDS
P0819[2] : Start copy

Example:

Copying of all values from DDS1 to DDS3 can be accomplished by the following procedure:

P0819[0] = 0 1. DDS
P0819[1] = 2 3. DDS
P0819[2] = 1 Start copy

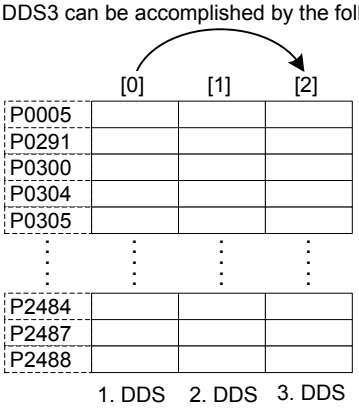

Note:

Start value in index 2 is automatically reset to 0 after execution of function.

P0820	**BI: DDS bit 0**			**Min:** 0:0	Level
	CStat: CT	**Datatype:** U32	**Unit:** -	**Def:** 0:0	**3**
	P-Group: COMMANDS	**Active:** first confirm	**QuickComm.:** No	**Max:** 4095:0	

Selects command source from which to read Bit 0 for selecting a drive data set (DDS).

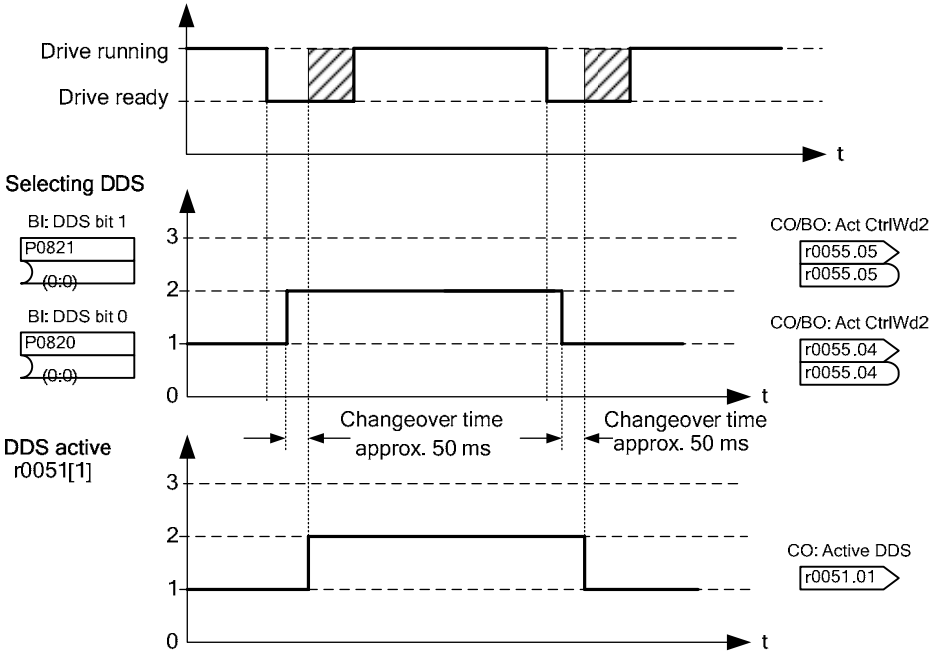

The actual active drive data set (DDS) is displayed in parameter r0051[1].

	selected DDS			active DDS
	r0055 Bit05	r0055 Bit04	r0051 [0]	r0051 [1]
1. DDS	0	0	0	0
2. DDS	0	1	1	1
3. DDS	1	0	2	2
3. DDS	1	1	2	2

Common Settings:

722.0 = Digital input 1 (requires P0701 to be set to 99, BICO)
722.1 = Digital input 2 (requires P0702 to be set to 99, BICO)
722.2 = Digital input 3 (requires P0703 to be set to 99, BICO)
722.3 = Digital input 4 (requires P0704 to be set to 99, BICO)
722.4 = Digital input 5 (requires P0705 to be set to 99, BICO)
722.5 = Digital input 6 (requires P0706 to be set to 99, BICO)
722.6 = Digital input 7 (via analog input 1, requires P0707 to be set to 99)
722.7 = Digital input 8 (via analog input 2, requires P0708 to be set to 99)

Example:

a) Commissioning procedure with one motor:

- Apply commissioning to DDS1
- Connect P0820 (P0821 if necessary) with DDS source (i.e. via DIN 4: P0704[0] = 99, P0820 = 722.3)
- Copy DDS1 to DDS2 (P0819[0] = 0, P0819[1] = 1, P0819[2] = 2)
- Adapt DDS2 parameters (e.g. Ramp-up time P1120[1] and Ramp-down time P1121[1])

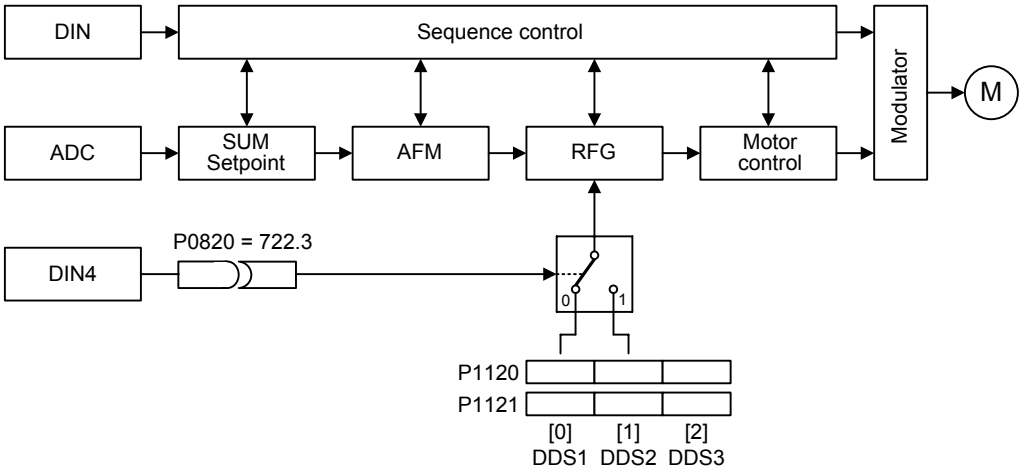

b) Commissioning procedure with two motors (Motor 1, Motor 2):

- Commission Motor 1; Adapt all other DDS1 parameters (as required)
- Connect P0820 (P0821 if necessary) with DDS source (i.e. via DIN 4: P0704[0] = 99, P0820 = 722.3)
- Switch-over to DDS2 (check it via r0051)
- Commission Motor 2; Adapt all other DDS2 parameters (as required)

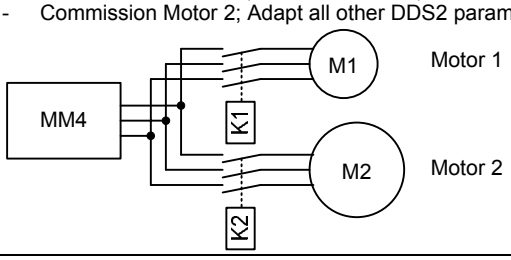

Note:

P0821 is also relevant for drive data set (DDS) selection.

P0821	**BI: DDS bit 1**				**Min:** 0:0	Level
	CStat: CT	**Datatype:** U32	**Unit:** -		**Def:** 0:0	**3**
	P-Group: COMMANDS	**Active:** first confirm	**QuickComm.:** No		**Max:** 4095:0	

Selects command source from which Bit 1 for selecting a drive data set is to be read in (see P0820).

Common Settings:

722.0 = Digital input 1 (requires P0701 to be set to 99, BICO)
722.1 = Digital input 2 (requires P0702 to be set to 99, BICO)
722.2 = Digital input 3 (requires P0703 to be set to 99, BICO)
722.3 = Digital input 4 (requires P0704 to be set to 99, BICO)
722.4 = Digital input 5 (requires P0705 to be set to 99, BICO)
722.5 = Digital input 6 (requires P0706 to be set to 99, BICO)
722.6 = Digital input 7 (via analog input 1, requires P0707 to be set to 99)
722.7 = Digital input 8 (via analog input 2, requires P0708 to be set to 99)

Note:

P0820 is also relevant for drive data set (DDS) selection.

3.14 BICO command parameters

P0840[3]	BI: ON/OFF1				Min: 0:0	Level
	CStat: CT	Datatype: U32	Unit: -		Def: 722:0	3
	P-Group: COMMANDS	Active: first confirm	QuickComm.: No		Max: 4000:0	

Allows ON/OFF1 command source to be selected using BICO.

The first three digits describe the parameter number of the command source; the last digit denotes the bit setting for that parameter. The default setting (ON right) is digital input 1 (722.0). Alternative source possible only when function of digital input 1 is changed (via P0701) before changing value of P0840.

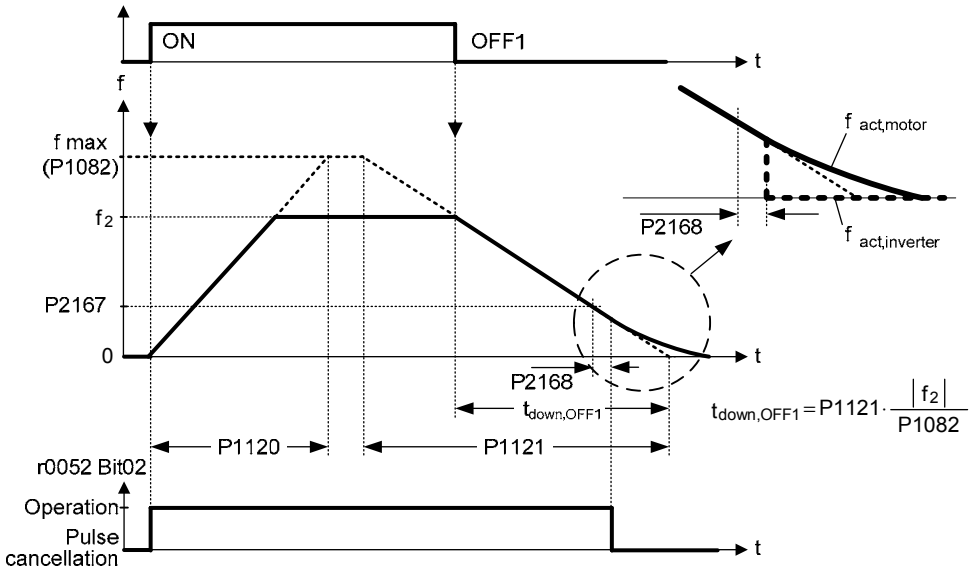

Index:

P0840[0] : 1st. Command data set (CDS)
P0840[1] : 2nd. Command data set (CDS)
P0840[2] : 3rd. Command data set (CDS)

Common Settings:

722.0 = Digital input 1 (requires P0701 to be set to 99, BICO)
722.1 = Digital input 2 (requires P0702 to be set to 99, BICO)
722.2 = Digital input 3 (requires P0703 to be set to 99, BICO)
722.3 = Digital input 4 (requires P0704 to be set to 99, BICO)
722.4 = Digital input 5 (requires P0705 to be set to 99, BICO)
722.5 = Digital input 6 (requires P0706 to be set to 99, BICO)
722.6 = Digital input 7 (via analog input 1, requires P0707 to be set to 99)
722.7 = Digital input 8 (via analog input 2, requires P0708 to be set to 99)
19.0 = ON/OFF1 via BOP

Dependency:

Active only when P0719 < 10. See parameter P0719 (Selection of command/setpoint source).

Note:

- OFF1 means a ramp stop down to 0 using P1121.
- OFF1 is low active.
- For the priority of all soft commands, the following applies: OFF2, OFF3, OFF1

P0842[3]	**BI: ON reverse/OFF1**			**Min:** 0:0	Level
	CStat: CT	**Datatype:** U32	**Unit:** -	**Def:** 0:0	**3**
	P-Group: COMMANDS	**Active:** first confirm	**QuickComm.:** No	**Max:** 4000:0	

Allows ON/OFF1 reverse command source to be selected using BICO.

The first three digits describe the parameter number of the command source and the last digit denotes the bit setting for that parameter.

Index:

P0842[0] : 1st. Command data set (CDS)
P0842[1] : 2nd. Command data set (CDS)
P0842[2] : 3rd. Command data set (CDS)

Common Settings:

722.0 = Digital input 1 (requires P0701 to be set to 99, BICO)
722.1 = Digital input 2 (requires P0702 to be set to 99, BICO)
722.2 = Digital input 3 (requires P0703 to be set to 99, BICO)
722.3 = Digital input 4 (requires P0704 to be set to 99, BICO)
722.4 = Digital input 5 (requires P0705 to be set to 99, BICO)
722.5 = Digital input 6 (requires P0706 to be set to 99, BICO)
722.6 = Digital input 7 (via analog input 1, requires P0707 to be set to 99)
722.7 = Digital input 8 (via analog input 2, requires P0708 to be set to 99)
19.0 = ON/OFF1 via BOP

Details:

See parameter P0840.

P0844[3]	**BI: 1. OFF2**			**Min:** 0:0	Level
	CStat: CT	**Datatype:** U32	**Unit:** -	**Def:** 1:0	**3**
	P-Group: COMMANDS	**Active:** first confirm	**QuickComm.:** No	**Max:** 4000:0	

Defines first source of OFF2.

The first three digits describe the parameter number of the command source and the last digit denotes the bit setting for that parameter. If one of the digital inputs is selected for OFF2, the inverter will not run unless the digital input is active.

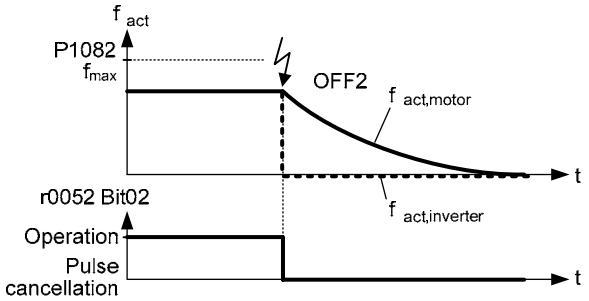

Index:

P0844[0] : 1st. Command data set (CDS)
P0844[1] : 2nd. Command data set (CDS)
P0844[2] : 3rd. Command data set (CDS)

Common Settings:

722.0 = Digital input 1 (requires P0701 to be set to 99, BICO)
722.1 = Digital input 2 (requires P0702 to be set to 99, BICO)
722.2 = Digital input 3 (requires P0703 to be set to 99, BICO)
722.3 = Digital input 4 (requires P0704 to be set to 99, BICO)
722.4 = Digital input 5 (requires P0705 to be set to 99, BICO)
722.5 = Digital input 6 (requires P0706 to be set to 99, BICO)
722.6 = Digital input 7 (via analog input 1, requires P0707 to be set to 99)
722.7 = Digital input 8 (via analog input 2, requires P0708 to be set to 99)
19.0 = ON/OFF1 via BOP
19.1 = OFF2: Electrical stop via BOP

Dependency:

Active only when P0719 < 10. See parameter P0719 (Selection of command/setpoint source).

Note:

- OFF2 means an immediate pulse inhibit; the motor coasts down.
- OFF2 is low active.
- The following applies for the priority of all of the OFF commands: OFF2, OFF3, OFF1

P0845[3]	**BI: 2. OFF2**				**Min:** 0:0	Level
	CStat: CT	**Datatype:** U32	**Unit:** -		**Def:** 19:1	**3**
	P-Group: COMMANDS	**Active:** first confirm	**QuickComm.:** No		**Max:** 4000:0	

Defines second source of OFF2.
The first three digits describe the parameter number of the command source and the last digit denotes the bit setting for that parameter. If one of the digital inputs is selected for OFF2, the inverter will not run unless the digital input is active.

Index:

P0845[0] : 1st. Command data set (CDS)
P0845[1] : 2nd. Command data set (CDS)
P0845[2] : 3rd. Command data set (CDS)

Common Settings:

722.0 = Digital input 1 (requires P0701 to be set to 99, BICO)
722.1 = Digital input 2 (requires P0702 to be set to 99, BICO)
722.2 = Digital input 3 (requires P0703 to be set to 99, BICO)
722.3 = Digital input 4 (requires P0704 to be set to 99, BICO)
722.4 = Digital input 5 (requires P0705 to be set to 99, BICO)
722.5 = Digital input 6 (requires P0706 to be set to 99, BICO)
722.6 = Digital input 7 (via analog input 1, requires P0707 to be set to 99)
722.7 = Digital input 8 (via analog input 2, requires P0708 to be set to 99)
19.0 = ON/OFF1 via BOP

Details:

See parameter P0844.

P0848[3]	**BI: 1. OFF3**				**Min:** 0:0	Level
	CStat: CT	**Datatype:** U32	**Unit:** -		**Def:** 1:0	**3**
	P-Group: COMMANDS	**Active:** first confirm	**QuickComm.:** No		**Max:** 4000:0	

Defines first source of OFF3.
The first three digits describe the parameter number of the command source and the last digit denotes the bit setting for that parameter. If one of the digital inputs is selected for OFF3, the inverter will not run unless the digital input is active.

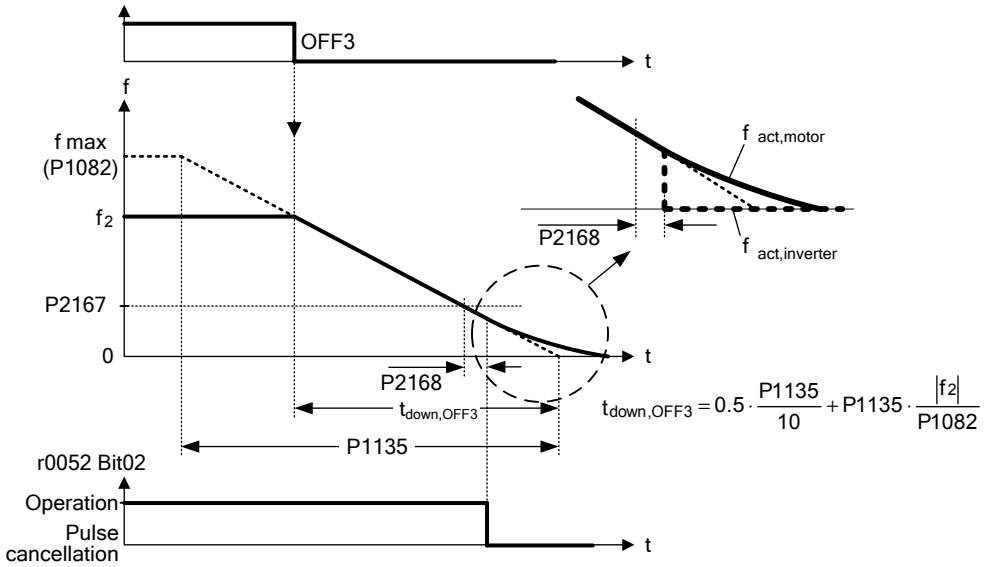

Index:

P0848[0] : 1st. Command data set (CDS)
P0848[1] : 2nd. Command data set (CDS)
P0848[2] : 3rd. Command data set (CDS)

Common Settings:

722.0 = Digital input 1 (requires P0701 to be set to 99, BICO)
722.1 = Digital input 2 (requires P0702 to be set to 99, BICO)
722.2 = Digital input 3 (requires P0703 to be set to 99, BICO)
722.3 = Digital input 4 (requires P0704 to be set to 99, BICO)
722.4 = Digital input 5 (requires P0705 to be set to 99, BICO)
722.5 = Digital input 6 (requires P0706 to be set to 99, BICO)
722.6 = Digital input 7 (via analog input 1, requires P0707 to be set to 99)
722.7 = Digital input 8 (via analog input 2, requires P0708 to be set to 99)
19.0 = ON/OFF1 via BOP

Dependency:

Active only when P0719 < 10. See parameter P0719 (Selection of command/setpoint source).

Note:

- OFF3 means fast ramp-down to 0 Hz through P1135.
- OFF3 is low-active.
- Priority of all OFF commands: OFF2, OFF3, OFF1

P0849[3]	**BI: 2. OFF3**				**Min:** 0:0	Level
	CStat: CT	**Datatype:** U32	**Unit:** -		**Def:** 1:0	**3**
	P-Group: COMMANDS	**Active:** first confirm	**QuickComm.:** No		**Max:** 4000:0	

Defines second source of OFF3.

The first three digits describe the parameter number of the command source and the last digit denotes the bit setting for that parameter. If one of the digital inputs is selected for OFF3, the inverter will not run unless the digital input is active.

Index:

P0849[0] : 1st. Command data set (CDS)
P0849[1] : 2nd. Command data set (CDS)
P0849[2] : 3rd. Command data set (CDS)

Common Settings:

722.0 = Digital input 1 (requires P0701 to be set to 99, BICO)
722.1 = Digital input 2 (requires P0702 to be set to 99, BICO)
722.2 = Digital input 3 (requires P0703 to be set to 99, BICO)
722.3 = Digital input 4 (requires P0704 to be set to 99, BICO)
722.4 = Digital input 5 (requires P0705 to be set to 99, BICO)
722.5 = Digital input 6 (requires P0706 to be set to 99, BICO)
722.6 = Digital input 7 (via analog input 1, requires P0707 to be set to 99)
722.7 = Digital input 8 (via analog input 2, requires P0708 to be set to 99)
19.0 = ON/OFF1 via BOP

Dependency:

In contrast to P0848 (first source of OFF3), this parameter is always active, independent of P0719 (selection of command and frequency setpoint).

Details:

See parameter P0848.

P0852[3]	**BI: Pulse enabling**				**Min:** 0:0	Level
	CStat: CT	**Datatype:** U32	**Unit:** -		**Def:** 1:0	**3**
	P-Group: COMMANDS	**Active:** first confirm	**QuickComm.:** No		**Max:** 4000:0	

Defines source of pulse enable/disable signal.

Index:

P0852[0] : 1st. Command data set (CDS)
P0852[1] : 2nd. Command data set (CDS)
P0852[2] : 3rd. Command data set (CDS)

Common Settings:

722.0 = Digital input 1 (requires P0701 to be set to 99, BICO)
722.1 = Digital input 2 (requires P0702 to be set to 99, BICO)
722.2 = Digital input 3 (requires P0703 to be set to 99, BICO)
722.3 = Digital input 4 (requires P0704 to be set to 99, BICO)
722.4 = Digital input 5 (requires P0705 to be set to 99, BICO)
722.5 = Digital input 6 (requires P0706 to be set to 99, BICO)
722.6 = Digital input 7 (via analog input 1, requires P0707 to be set to 99)
722.7 = Digital input 8 (via analog input 2, requires P0708 to be set to 99)

Dependency:

Active only when P0719 < 10. See parameter P0719 (Selection of command/setpoint source).

3.15 Communication parameters

P0918	**CB address**				**Min:** 0	Level
	CStat: CT	**Datatype:** U16	**Unit:** -		**Def:** 3	**2**
	P-Group: COMM	**Active:** first confirm	**QuickComm.:** No		**Max:** 65535	

Defines address of CB (communication board) or address of the other option modules.

There are two ways to set the bus address:
- via DIP switches on the PROFIBUS module
- via a user-entered value

Note:

Possible PROFIBUS settings:
- 1 ... 125
- 0, 126, 127 are not allowed

The following applies when a PROFIBUS module is used:
- DIP switch = 0 Address defined in P0918 (CB address) is valid
- DIP switch not = 0 DIP switch setting has priority and P0918 indicates DIP switch setting.

P0927	**Parameter changeable via**			**Min:** 0	Level
	CStat: CUT	**Datatype:** U16	**Unit:** -	**Def:** 15	**3**
	P-Group: COMM	**Active:** first confirm	**QuickComm.:** No	**Max:** 15	

Specifies the interfaces which can be used to change parameters.

This parameter allows the user to easily protect the inverter from unauthorized modification of parameters. Annotation: Parameter P0927 is not password protected.

Bitfields:

Bit00	PROFIBUS / CB	0	NO	1	YES
Bit01	BOP	0	NO	1	YES
Bit02	USS on BOP link	0	NO	1	YES
Bit03	USS on COM link	0	NO	1	YES

Example:

Bits 0, 1, 2 and 3 set:
The default setting allows parameters to be changed via any interface. If all bits are set, the parameter is displayed on BOP as follows:

BOP: P0927

Bits 0, 1, 2 and 3 reset:
This setting allows no parameters to be modified via any interface with the exception of P0003 and P0927. If all bits are reset, the parameter is displayed on BOP as follows:

BOP: P0927

Details:

The seven-segment display is explained in the "Introduction to MICROMASTER System Parameters" in this handbook.

r0947[8]	**CO: Last fault code**			**Min:** -	Level
		Datatype: U16	**Unit:** -	**Def:** -	**3**
	P-Group: ALARMS			**Max:** -	

Displays fault history according to the diagram below

where:
- "F1" is the first active fault (not yet acknowledged).
- "F2" is the second active fault (not yet acknowledged).
- "F1e" is the occurrence of the fault acknowledgement for F1 & F2.

This moves the value in the 2 indices down to the next pair of indices, where they are stored. Indices 0 & 1 contain the active faults. When faults are acknowledged, indices 0 & 1 are reset to 0.

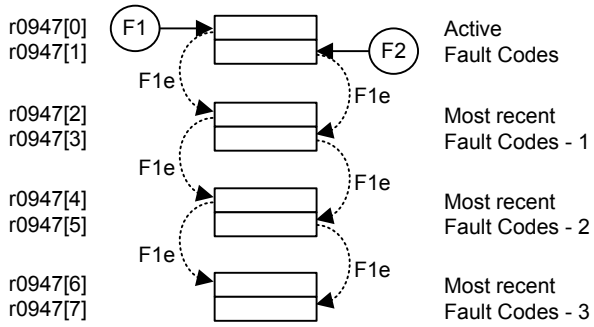

Index:

r0947[0] : Recent fault trip --, fault 1
r0947[1] : Recent fault trip --, fault 2
r0947[2] : Recent fault trip -1, fault 3
r0947[3] : Recent fault trip -1, fault 4
r0947[4] : Recent fault trip -2, fault 5
r0947[5] : Recent fault trip -2, fault 6
r0947[6] : Recent fault trip -3, fault 7
r0947[7] : Recent fault trip -3, fault 8

Example:

If the inverter trips on undervoltage and then receives an external trip before the undervoltage is acknowledged, you will obtain:
- r0947[0] = 3 Undervoltage (F0003)
- r0947[1] = 85 External trip (F0085)

Whenever a fault in index 0 is acknowledged (F1e), the fault history shifts as indicated in the diagram above.

Dependency:

Index 1 used only if second fault occurs before first fault is acknowledged.

Details:

See "Faults and Warnings"

r0948[12]	**CO: Fault time**			**Min:** -	Level
		Datatype: U16	**Unit:** -	**Def:** -	**3**
	P-Group: ALARMS			**Max:** -	

Time stamp to indicate when the fault has occurred.

Index:

r0948[0] : Recent fault trip --, time stamp
r0948[1] : Recent fault trip --, time stamp
r0948[2] : Recent fault trip --, time stamp
r0948[3] : Recent fault trip -1, time stamp
r0948[4] : Recent fault trip -1, time stamp
r0948[5] : Recent fault trip -1, time stamp
r0948[6] : Recent fault trip -2, time stamp
r0948[7] : Recent fault trip -2, time stamp
r0948[8] : Recent fault trip -2, time stamp
r0948[9] : Recent fault trip -3, time stamp
r0948[10] : Recent fault trip -3, time stamp
r0948[11] : Recent fault trip -3, time stamp

Details:

Parameter r2114 (runtime counter) is a possible source of the time stamp. When using the runtime counter, the time is entered into the first two indices of the fault trip (shutdown) essentially the same as for r2114.

Time stamp when using r2114 (Refer to parameter r2114):

r0948[0] : Last fault trip --, system time, seconds, upper word
r0948[1] : Last fault trip --, system time, seconds, lower word
r0948[2] : 0
r0948[3] : Last fault trip --, system time, seconds, upper word
r0948[4] : Last fault trip --, system time, seconds, lower word
r0948[5] : 0
r0948[6] : Last fault trip --, system time, seconds, upper word
r0948[7] : Last fault trip --, system time, seconds, lower word
r0948[8] : 0
r0948[9] : Last fault trip --, system time, seconds, upper word
r0948[10] : Last fault trip --, system time, seconds, lower word
r0948[11] : 0

r0949[8]	**CO: Fault value**			**Min:** -	Level
		Datatype: U16	**Unit:** -	**Def:** -	**3**
	P-Group: ALARMS			**Max:** -	

Displays drive fault values. It is for service purposes and indicate the type of fault reported. The values are listed in the code where faults are reported.

Index:

r0949[0] : Recent fault trip --, fault value 1
r0949[1] : Recent fault trip --, fault value 2
r0949[2] : Recent fault trip -1, fault value 3
r0949[3] : Recent fault trip -1, fault value 4
r0949[4] : Recent fault trip -2, fault value 5
r0949[5] : Recent fault trip -2, fault value 6
r0949[6] : Recent fault trip -3, fault value 7
r0949[7] : Recent fault trip -3, fault value 8

P0952	**Total number of faults**			**Min:** 0	Level
	CStat: CUT	**Datatype:** U16	**Unit:** -	**Def:** 0	**3**
	P-Group: ALARMS	**Active:** first confirm	**QuickComm.:** No	**Max:** 8	

Displays number of faults stored in r0947 (last fault code).

Dependency:

Setting 0 resets fault history. (changing to 0 also resets parameter r0948 - fault time).

r0964[5]	**Firmware version data**			**Min:** -	Level
		Datatype: U16	**Unit:** -	**Def:** -	**3**
	P-Group: COMM			**Max:** -	

Firmware version data.

Index:

r0964[0] : Company (Siemens = 42)
r0964[1] : Product type
r0964[2] : Firmware version
r0964[3] : Firmware date (year)
r0964[4] : Firmware date (day/month)

Example:

No.	Value	Meaning
r0964[0]	42	SIEMENS
r0964[1]	1001	MICROMASTER 420
	1002	MICROMASTER 440
	1003	MICRO- / COMBIMASTER 411
	1004	MICROMASTER 410
	1005	reserved
	1006	MICROMASTER 440 PX
	1007	MICROMASTER 430
r0964[2]	105	Firmware V1.05
r0964[3]	2001	27.10.2001
r0964[4]	2710	

r0965	**Profibus profile**			**Min:** -	Level
		Datatype: U16	**Unit:** -	**Def:** -	**3**
	P-Group: COMM			**Max:** -	

Identification for PROFIDrive. Profile number and version.

r0967	**Control word 1**			**Min:** -	Level
		Datatype: U16	**Unit:** -	**Def:** -	**3**
	P-Group: COMM			**Max:** -	

Displays control word 1.

Bitfields:

```
Bit00   ON/OFF1                                  0  NO        1  YES
Bit01   OFF2: Electrical stop                    0  YES       1  NO
Bit02   OFF3: Fast stop                          0  YES       1  NO
Bit03   Pulses enabled                           0  NO        1  YES

Bit04   RFG enable                               0  NO        1  YES
Bit05   RFG start                                0  NO        1  YES
Bit06   Setpoint enable                          0  NO        1  YES
Bit07   Fault acknowledge                        0  NO        1  YES

Bit08   reserved
Bit09   reserved
Bit10   Control from PLC                         0  NO        1  YES
Bit11   Reverse (setpoint inversion)             0  NO        1  YES

Bit13   Motor potentiometer MOP up               0  NO        1  YES
Bit14   Motor potentiometer MOP down             0  NO        1  YES
Bit15   CDS Bit 0 (Local/Remote)                 0  NO        1  YES
```

r0968	**Status word 1**			**Min:** -	Level
		Datatype: U16	**Unit:** -	**Def:** -	**3**
	P-Group: COMM			**Max:** -	

Displays active status word of inverter (in binary) and can be used to diagnose which commands are active.

Bitfields:

Bit00	Drive ready	0	NO	1	YES
Bit01	Drive ready to run	0	NO	1	YES
Bit02	Drive running	0	NO	1	YES
Bit03	Drive fault active	0	NO	1	YES
Bit04	OFF2 active	0	YES	1	NO
Bit05	OFF3 active	0	YES	1	NO
Bit06	ON inhibit active	0	NO	1	YES
Bit07	Drive warning active	0	NO	1	YES
Bit08	Deviation setpoint / act. value	0	YES	1	NO
Bit09	PZD control	0	NO	1	YES
Bit10	Maximum frequency reached	0	NO	1	YES
Bit11	Warning: Motor current limit	0	YES	1	NO
Bit12	Motor holding brake active	0	NO	1	YES
Bit13	Motor overload	0	YES	1	NO
Bit14	Motor runs right	0	NO	1	YES
Bit15	Inverter overload	0	YES	1	NO

P0970	**Factory reset**			**Min:** 0	Level
	CStat: C	**Datatype:** U16	**Unit:** -	**Def:** 0	**1**
	P-Group: PAR_RESET	**Active:** first confirm	**QuickComm.:** No	**Max:** 1	

P0970 = 1 resets all parameters to their default values.

Possible Settings:

0 Disabled
1 Parameter reset

Dependency:

- First set P0010 = 30 (factory settings).
- Stop drive (i.e. disable all pulses) before you can reset parameters to default values.

Note:

The following parameters retain their values after a factory reset:

- P0014 Store mode
- r0039 CO: Energy consumption meter [kWh]
- P0100 Europe / North America
- P0918 CB address
- P2010 USS baud rate
- P2011 USS address

P0971	**Transfer data from RAM to EEPROM**			**Min:** 0	Level
	CStat: CUT	**Datatype:** U16	**Unit:** -	**Def:** 0	**3**
	P-Group: COMM	**Active:** first confirm	**QuickComm.:** No	**Max:** 1	

Transfers values from RAM to EEPROM when set to 1.

Possible Settings:

0 Disabled
1 Start transfer

Note:

All values in RAM are transferred to EEPROM.

Parameter is automatically reset to 0 (default) after successful transfer.

The storage from RAM to EEPROM is accomplished via P0971. The communications are reset, if the transfer was successful. During the reset process communications will be interrupted. This creates the following conditions:

- PLC (e.g. SIMATIC S7) enters Stop mode
- Starter automatically recovers communications once they are re-established.
- Drivemonitor is displayed "NC" (not connected) in the status line or "drive busy".
- BOP displays "busy"

After completion of the transfer process, the communication between the inverter and the PC-tools (e.g. Starter) or BOP is automatically re-established.

3.16 Setpoint source

P1000[3]	Selection of frequency setpoint			Min: 0	Level
	CStat: CT	Datatype: U16	Unit: -	Def: 2	1
	P-Group: SETPOINT	Active: first confirm	QuickComm.: Yes	Max: 77	

Selects frequency setpoint source. The selection of settings is detailed in the following table of possible settings, in which the Main setpoint is given by the least significant digit (right-hand position) and the Additional setpoint is given by the most significant digit (left-hand position).

Possible Settings:

0	No main setpoint		
1	MOP setpoint		
2	Analog setpoint		
3	Fixed frequency		
4	USS on BOP link		
5	USS on COM link		
6	CB on COM link		
7	Analog setpoint 2		
10	No main setpoint	+	MOP setpoint
11	MOP setpoint	+	MOP setpoint
12	Analog setpoint	+	MOP setpoint
13	Fixed frequency	+	MOP setpoint
14	USS on BOP link	+	MOP setpoint
15	USS on COM link	+	MOP setpoint
16	CB on COM link	+	MOP setpoint
17	Analog setpoint 2	+	MOP setpoint
20	No main setpoint	+	Analog setpoint
21	MOP setpoint	+	Analog setpoint
22	Analog setpoint	+	Analog setpoint
23	Fixed frequency	+	Analog setpoint
24	USS on BOP link	+	Analog setpoint
25	USS on COM link	+	Analog setpoint
26	CB on COM link	+	Analog setpoint
27	Analog setpoint 2	+	Analog setpoint
30	No main setpoint	+	Fixed frequency
31	MOP setpoint	+	Fixed frequency
32	Analog setpoint	+	Fixed frequency
33	Fixed frequency	+	Fixed frequency
34	USS on BOP link	+	Fixed frequency
35	USS on COM link	+	Fixed frequency
36	CB on COM link	+	Fixed frequency
37	Analog setpoint 2	+	Fixed frequency
40	No main setpoint	+	USS on BOP link
41	MOP setpoint	+	USS on BOP link
42	Analog setpoint	+	USS on BOP link
43	Fixed frequency	+	USS on BOP link
44	USS on BOP link	+	USS on BOP link
45	USS on COM link	+	USS on BOP link
46	CB on COM link	+	USS on BOP link
47	Analog setpoint 2	+	USS on BOP link
50	No main setpoint	+	USS on COM link
51	MOP setpoint	+	USS on COM link
52	Analog setpoint	+	USS on COM link
53	Fixed frequency	+	USS on COM link
54	USS on BOP link	+	USS on COM link
55	USS on COM link	+	USS on COM link
57	Analog setpoint 2	+	USS on COM link
60	No main setpoint	+	CB on COM link
61	MOP setpoint	+	CB on COM link
62	Analog setpoint	+	CB on COM link
63	Fixed frequency	+	CB on COM link
64	USS on BOP link	+	CB on COM link
66	CB on COM link	+	CB on COM link
67	Analog setpoint 2	+	CB on COM link
70	No main setpoint	+	Analog setpoint 2
71	MOP setpoint	+	Analog setpoint 2
72	Analog setpoint	+	Analog setpoint 2
73	Fixed frequency	+	Analog setpoint 2
74	USS on BOP link	+	Analog setpoint 2
75	USS on COM link	+	Analog setpoint 2
76	CB on COM link	+	Analog setpoint 2
77	Analog setpoint 2	+	Analog setpoint 2

Index:

P1000[0] : 1st. Command data set (CDS)
P1000[1] : 2nd. Command data set (CDS)
P1000[2] : 3rd. Command data set (CDS)

Example:

Setting 12 selects main setpoint (2) derived from analog input with additional setpoint (1) taken from the motor potentiometer.

Example P1000 = 12 :

P1000 = **1**2 ⇒ P1075 = 1050	P1075	CI: Additional setpoint
	r1050	CO: Act. Output freq. of the MOP
P1000 = 1**2** ⇒ P1070 = 755	P1070	CI: Main setpoint
	r0755	CO: Act. ADC after scal. [4000h]

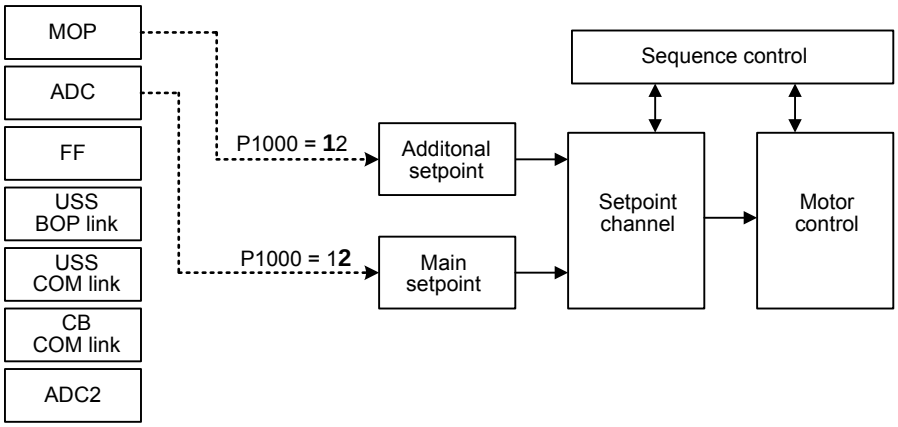

Caution:

Be aware, by changing of parameter P1000 all BICO parameters (see table below) are modified.

Note:

Single digits denote main setpoints that have no additional setpoint.

Changing this parameter sets (to default) all settings on item selected (see table).

P1000 = xy		y = 0	y = 1	y = 2	y = 3	y = 4	y = 5	y = 6	y = 7	
P1000 = xy	x = 0	0.0	1050.0	755.0	1024.0	2015.1	2018.1	2050.1	755.1	P1070
		1.0	1.0	1.0	1.0	1.0	1.0	1.0	1.0	P1071
		0.0	0.0	0.0	0.0	0.0	0.0	0.0	0.0	P1075
		1.0	1.0	1.0	1.0	1.0	1.0	1.0	1.0	P1076
	x = 1	0.0	1050.0	755.0	1024.0	2015.1	2018.1	2050.1	755.1	P1070
		1.0	1.0	1.0	1.0	1.0	1.0	1.0	1.0	P1071
		1050.0	1050.0	1050.0	1050.0	1050.0	1050.0	1050.0	1050.0	P1075
		1.0	1.0	1.0	1.0	1.0	1.0	1.0	1.0	P1076
	x = 2	0.0	1050.0	755.0	1024.0	2015.1	2018.1	2050.1	755.1	P1070
		1.0	1.0	1.0	1.0	1.0	1.0	1.0	1.0	P1071
		755.0	755.0	755.0	755.0	755.0	755.0	755.0	755.0	P1075
		1.0	1.0	1.0	1.0	1.0	1.0	1.0	1.0	P1076
	x = 3	0.0	1050.0	755.0	1024.0	2015.1	2018.1	2050.1	755.1	P1070
		1.0	1.0	1.0	1.0	1.0	1.0	1.0	1.0	P1071
		1024.0	1024.0	1024.0	1024.0	1024.0	1024.0	1024.0	1024.0	P1075
		1.0	1.0	1.0	1.0	1.0	1.0	1.0	1.0	P1076
	x = 4	0.0	1050.0	755.0	1024.0	2015.1	2018.1	2050.1	755.1	P1070
		1.0	1.0	1.0	1.0	1.0	1.0	1.0	1.0	P1071
		2015.1	2015.1	2015.1	2015.1	2015.1	2015.1	2015.1	2015.1	P1075
		1.0	1.0	1.0	1.0	1.0	1.0	1.0	1.0	P1076
	x = 5	0.0	1050.0	755.0	1024.0	2015.1	2018.1		755.1	P1070
		1.0	1.0	1.0	1.0	1.0	1.0		1.0	P1071
		2018.1	2018.1	2018.1	2018.1	2018.1	2018.1		2018.1	P1075
		1.0	1.0	1.0	1.0	1.0	1.0		1.0	P1076
	x = 6	0.0	1050.0	755.0	1024.0	2015.1		2050.1	755.1	P1070
		1.0	1.0	1.0	1.0	1.0		1.0	1.0	P1071
		2050.1	2050.1	2050.1	2050.1	2050.1		2050.1	2050.1	P1075
		1.0	1.0	1.0	1.0	1.0		1.0	1.0	P1076
	x = 7	0.0	1050.0	755.0	1024.0	2015.1	2018.1	2050.1	755.1	P1070
		1.0	1.0	1.0	1.0	1.0	1.0	1.0	1.0	P1071
		755.1	755.1	755.1	755.1	755.1	755.1	755.1	755.1	P1075
		1.0	1.0	1.0	1.0	1.0	1.0	1.0	1.0	P1076

Example:

P1000 = 21 → P1070 = 1050.0
P1071 = 1.0
P1075 = 755.0
P1076 = 1.0

3.17 Fixed frequencies

P1001[3]	**Fixed frequency 1**				**Min:** -650.00	Level
	CStat: CUT	**Datatype:** Float	**Unit:** Hz		**Def:** 0.00	**3**
	P-Group: SETPOINT	**Active:** Immediately	**QuickComm.:** No		**Max:** 650.00	

Defines fixed frequency setpoint 1.

There are three options available for selection of the fixed frequencies:
1. Direct selection
2. Direct selection + ON command
3. Binary coded selection + ON command

1. Direct selection (P0701 - P0706 = 15):
   - In this mode of operation 1 digital input selects 1 fixed frequency.
   - If several inputs are active together, the selected frequencies are summed.
   - E.g.: FF1 + FF2 + FF3 + FF4 + FF5 + FF6.

2. Direct selection + ON command (P0701 - P0706 = 16):
   - The fixed frequency selection combines the fixed frequencies with an ON command.
   - In this mode of operation 1 digital input selects 1 fixed frequency.
   - If several inputs are active together, the selected frequencies are summed.
   - E.g.: FF1 + FF2 + FF3 + FF4 + FF5 + FF6.

3. Binary coded selection + ON command (P0701 - P0706 = 17):
   - Up to 16 fixed frequencies can be selected using this method.
   - The fixed frequencies are selected according to the following table:

Index:

P1001[0] : 1st. Drive data set (DDS)
P1001[1] : 2nd. Drive data set (DDS)
P1001[2] : 3rd. Drive data set (DDS)

Example:

Binary coded selection :

		DIN4	**DIN3**	**DIN2**	**DIN1**
0 Hz	FF0	0	0	0	0
P1001	FF1	0	0	0	**1**
P1002	FF2	0	0	**1**	0
P1003	FF3	0	0	**1**	**1**
P1004	FF4	0	**1**	0	0
P1005	FF5	0	**1**	0	**1**
P1006	FF6	0	**1**	**1**	0
P1007	FF7	0	**1**	**1**	**1**
P1008	FF8	**1**	0	0	0
P1009	FF9	**1**	0	0	**1**
P1010	FF10	**1**	0	**1**	0
P1011	FF11	**1**	0	**1**	**1**
P1012	FF12	**1**	**1**	0	0
P1013	FF13	**1**	**1**	0	**1**
P1014	FF14	**1**	**1**	**1**	0
P1015	FF15	**1**	**1**	**1**	**1**

Direct selection of FF P1001 via DIN 1:

P0701 = 15 or P0701 = 99, P1020 = 722.0, P1016 = 1
P0702 = 15 or P0702 = 99, P1021 = 722.1, P1017 = 1

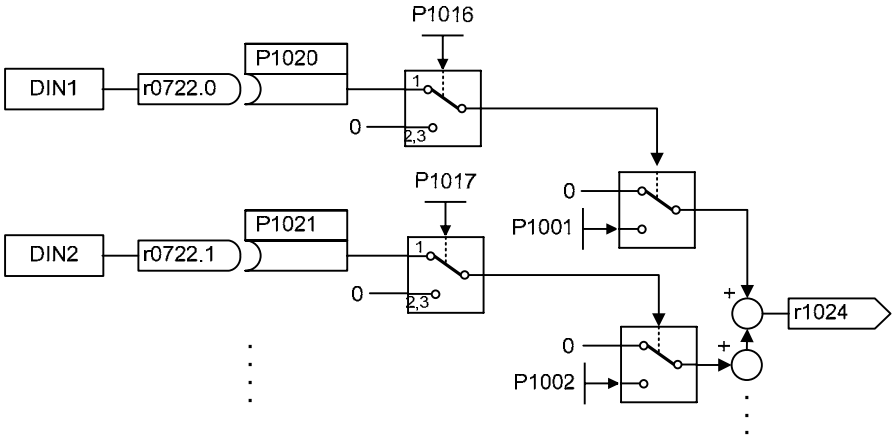

Dependency:

Select fixed frequency operation (using P1000).

Inverter requires ON command to start in the case of direct selection (P0701 - P0706 = 15).

Note:

Fixed frequencies can be selected using the digital inputs, and can also be combined with an ON command.

P1002[3]	**Fixed frequency 2**				**Min:** -650.00	Level
	CStat: CUT	**Datatype:** Float	**Unit:** Hz		**Def:** 5.00	**3**
	P-Group: SETPOINT	**Active:** Immediately	**QuickComm.:** No		**Max:** 650.00	

Defines fixed frequency setpoint 2.

Index:

P1002[0] : 1st. Drive data set (DDS)
P1002[1] : 2nd. Drive data set (DDS)
P1002[2] : 3rd. Drive data set (DDS)

Details:

See parameter P1001 (fixed frequency 1).

P1003[3]	**Fixed frequency 3**				**Min:** -650.00	Level
	CStat: CUT	**Datatype:** Float	**Unit:** Hz		**Def:** 10.00	**3**
	P-Group: SETPOINT	**Active:** Immediately	**QuickComm.:** No		**Max:** 650.00	

Defines fixed frequency setpoint 3.

Index:

P1003[0] : 1st. Drive data set (DDS)
P1003[1] : 2nd. Drive data set (DDS)
P1003[2] : 3rd. Drive data set (DDS)

Details:

See parameter P1001 (fixed frequency 1).

P1004[3]	**Fixed frequency 4**				**Min:** -650.00	Level
	CStat: CUT	**Datatype:** Float	**Unit:** Hz		**Def:** 15.00	**3**
	P-Group: SETPOINT	**Active:** Immediately	**QuickComm.:** No		**Max:** 650.00	

Defines fixed frequency setpoint 4.

Index:

P1004[0] : 1st. Drive data set (DDS)
P1004[1] : 2nd. Drive data set (DDS)
P1004[2] : 3rd. Drive data set (DDS)

Details:

See parameter P1001 (fixed frequency 1).

P1005[3]	**Fixed frequency 5**				**Min:** -650.00	Level
	CStat: CUT	**Datatype:** Float	**Unit:** Hz		**Def:** 20.00	**3**
	P-Group: SETPOINT	**Active:** Immediately	**QuickComm.:** No		**Max:** 650.00	

Defines fixed frequency setpoint 5.

Index:

P1005[0] : 1st. Drive data set (DDS)
P1005[1] : 2nd. Drive data set (DDS)
P1005[2] : 3rd. Drive data set (DDS)

Details:

See parameter P1001 (fixed frequency 1).

P1006[3]	**Fixed frequency 6**				**Min:**	-650.00	Level
	CStat:	CUT	**Datatype:** Float	**Unit:** Hz	**Def:**	25.00	**3**
	P-Group:	SETPOINT	**Active:** Immediately	**QuickComm.:** No	**Max:**	650.00	

Defines fixed frequency setpoint 6.

Index:

P1006[0] : 1st. Drive data set (DDS)
P1006[1] : 2nd. Drive data set (DDS)
P1006[2] : 3rd. Drive data set (DDS)

Details:

See parameter P1001 (fixed frequency 1).

P1007[3]	**Fixed frequency 7**				**Min:**	-650.00	Level
	CStat:	CUT	**Datatype:** Float	**Unit:** Hz	**Def:**	30.00	**3**
	P-Group:	SETPOINT	**Active:** Immediately	**QuickComm.:** No	**Max:**	650.00	

Defines fixed frequency setpoint 7.

Index:

P1007[0] : 1st. Drive data set (DDS)
P1007[1] : 2nd. Drive data set (DDS)
P1007[2] : 3rd. Drive data set (DDS)

Details:

See parameter P1001 (fixed frequency 1).

P1008[3]	**Fixed frequency 8**				**Min:**	-650.00	Level
	CStat:	CUT	**Datatype:** Float	**Unit:** Hz	**Def:**	35.00	**3**
	P-Group:	SETPOINT	**Active:** Immediately	**QuickComm.:** No	**Max:**	650.00	

Defines fixed frequency setpoint 8.

Index:

P1008[0] : 1st. Drive data set (DDS)
P1008[1] : 2nd. Drive data set (DDS)
P1008[2] : 3rd. Drive data set (DDS)

Details:

See parameter P1001 (fixed frequency 1).

P1009[3]	**Fixed frequency 9**				**Min:**	-650.00	Level
	CStat:	CUT	**Datatype:** Float	**Unit:** Hz	**Def:**	40.00	**3**
	P-Group:	SETPOINT	**Active:** Immediately	**QuickComm.:** No	**Max:**	650.00	

Defines fixed frequency setpoint 9.

Index:

P1009[0] : 1st. Drive data set (DDS)
P1009[1] : 2nd. Drive data set (DDS)
P1009[2] : 3rd. Drive data set (DDS)

Details:

See parameter P1001 (fixed frequency 1).

P1010[3]	**Fixed frequency 10**				**Min:**	-650.00	Level
	CStat:	CUT	**Datatype:** Float	**Unit:** Hz	**Def:**	45.00	**3**
	P-Group:	SETPOINT	**Active:** Immediately	**QuickComm.:** No	**Max:**	650.00	

Defines fixed frequency setpoint 10.

Index:

P1010[0] : 1st. Drive data set (DDS)
P1010[1] : 2nd. Drive data set (DDS)
P1010[2] : 3rd. Drive data set (DDS)

Details:

See parameter P1001 (fixed frequency 1).

P1011[3]	**Fixed frequency 11**				**Min:**	-650.00	Level
	CStat:	CUT	**Datatype:** Float	**Unit:** Hz	**Def:**	50.00	**3**
	P-Group:	SETPOINT	**Active:** Immediately	**QuickComm.:** No	**Max:**	650.00	

Defines fixed frequency setpoint 11.

Index:

P1011[0] : 1st. Drive data set (DDS)
P1011[1] : 2nd. Drive data set (DDS)
P1011[2] : 3rd. Drive data set (DDS)

Details:

See parameter P1001 (fixed frequency 1).

P1012[3]	Fixed frequency 12			Min: -650.00	Level
CStat: CUT	Datatype: Float	Unit: Hz	Def: 55.00		3
P-Group: SETPOINT	Active: Immediately	QuickComm.: No	Max: 650.00		

Defines fixed frequency setpoint 12.

Index:

P1012[0] : 1st. Drive data set (DDS)
P1012[1] : 2nd. Drive data set (DDS)
P1012[2] : 3rd. Drive data set (DDS)

Details:

See parameter P1001 (fixed frequency 1).

P1013[3]	Fixed frequency 13			Min: -650.00	Level
CStat: CUT	Datatype: Float	Unit: Hz	Def: 60.00		3
P-Group: SETPOINT	Active: Immediately	QuickComm.: No	Max: 650.00		

Defines fixed frequency setpoint 13.

Index:

P1013[0] : 1st. Drive data set (DDS)
P1013[1] : 2nd. Drive data set (DDS)
P1013[2] : 3rd. Drive data set (DDS)

Details:

See parameter P1001 (fixed frequency 1).

P1014[3]	Fixed frequency 14			Min: -650.00	Level
CStat: CUT	Datatype: Float	Unit: Hz	Def: 65.00		3
P-Group: SETPOINT	Active: Immediately	QuickComm.: No	Max: 650.00		

Defines fixed frequency setpoint 14.

Index:

P1014[0] : 1st. Drive data set (DDS)
P1014[1] : 2nd. Drive data set (DDS)
P1014[2] : 3rd. Drive data set (DDS)

Details:

See parameter P1001 (fixed frequency 1).

P1015[3]	Fixed frequency 15			Min: -650.00	Level
CStat: CUT	Datatype: Float	Unit: Hz	Def: 65.00		3
P-Group: SETPOINT	Active: Immediately	QuickComm.: No	Max: 650.00		

Defines fixed frequency setpoint 15.

Index:

P1015[0] : 1st. Drive data set (DDS)
P1015[1] : 2nd. Drive data set (DDS)
P1015[2] : 3rd. Drive data set (DDS)

Details:

See parameter P1001 (fixed frequency 1).

P1016[3]	Fixed frequency mode - Bit 0			Min: 1	Level
CStat: CT	Datatype: U16	Unit: -	Def: 1		3
P-Group: SETPOINT	Active: first confirm	QuickComm.: No	Max: 3		

Fixed frequencies can be selected in three different modes. Parameter P1016 defines the mode of selection Bit 0.

Possible Settings:

1 Direct selection
2 Direct selection + ON command
3 Binary coded selection + ON command

Index:

P1016[0] : 1st. Command data set (CDS)
P1016[1] : 2nd. Command data set (CDS)
P1016[2] : 3rd. Command data set (CDS)

Details:

See table in P1001 (fixed frequency 1) for description of how to use fixed frequencies.

P1017[3]	Fixed frequency mode - Bit 1			Min: 1	Level
	CStat: CT	Datatype: U16	Unit: -	Def: 1	3
	P-Group: SETPOINT	Active: first confirm	QuickComm.: No	Max: 3	

Fixed frequencies can be selected in three different modes. Parameter P1017 defines the mode of selection Bit 1.

Possible Settings:

1 Direct selection
2 Direct selection + ON command
3 Binary coded selection + ON command

Index:

P1017[0] : 1st. Command data set (CDS)
P1017[1] : 2nd. Command data set (CDS)
P1017[2] : 3rd. Command data set (CDS)

Details:

See table in P1001 (fixed frequency 1) for description of how to use fixed frequencies.

P1018[3]	Fixed frequency mode - Bit 2			Min: 1	Level
	CStat: CT	Datatype: U16	Unit: -	Def: 1	3
	P-Group: SETPOINT	Active: first confirm	QuickComm.: No	Max: 3	

Fixed frequencies can be selected in three different modes. Parameter P1018 defines the mode of selection Bit 2.

Possible Settings:

1 Direct selection
2 Direct selection + ON command
3 Binary coded selection + ON command

Index:

P1018[0] : 1st. Command data set (CDS)
P1018[1] : 2nd. Command data set (CDS)
P1018[2] : 3rd. Command data set (CDS)

Details:

See table in P1001 (fixed frequency 1) for description of how to use fixed frequencies.

P1019[3]	Fixed frequency mode - Bit 3			Min: 1	Level
	CStat: CT	Datatype: U16	Unit: -	Def: 1	3
	P-Group: SETPOINT	Active: first confirm	QuickComm.: No	Max: 3	

Fixed frequencies can be selected in three different modes. Parameter P1019 defines the mode of selection Bit 3.

Possible Settings:

1 Direct selection
2 Direct selection + ON command
3 Binary coded selection + ON command

Index:

P1019[0] : 1st. Command data set (CDS)
P1019[1] : 2nd. Command data set (CDS)
P1019[2] : 3rd. Command data set (CDS)

Details:

See table in P1001 (fixed frequency 1) for description of how to use fixed frequencies.

P1020[3]	BI: Fixed freq. selection Bit 0			Min: 0:0	Level
	CStat: CT	Datatype: U32	Unit: -	Def: 0:0	3
	P-Group: COMMANDS	Active: first confirm	QuickComm.: No	Max: 4000:0	

Defines origin of fixed frequency selection.

Index:

P1020[0] : 1st. Command data set (CDS)
P1020[1] : 2nd. Command data set (CDS)
P1020[2] : 3rd. Command data set (CDS)

Common Settings:

P1020 = 722.0 ==> Digital input 1
P1021 = 722.1 ==> Digital input 2
P1022 = 722.2 ==> Digital input 3
P1023 = 722.3 ==> Digital input 4
P1026 = 722.4 ==> Digital input 5
P1028 = 722.5 ==> Digital input 6

Dependency:

Accessible only if P0701 - P0706 = 99 (function of digital inputs = BICO)

P1021[3]	**BI: Fixed freq. selection Bit 1**			**Min:** 0:0	Level
	CStat: CT	**Datatype:** U32	**Unit:** -	**Def:** 0:0	**3**
	P-Group: COMMANDS	**Active:** first confirm	**QuickComm.:** No	**Max:** 4000:0	

Defines origin of fixed frequency selection.

Index:

P1021[0] : 1st. Command data set (CDS)
P1021[1] : 2nd. Command data set (CDS)
P1021[2] : 3rd. Command data set (CDS)

Dependency:

Accessible only if P0701 - P0706 = 99 (function of digital inputs = BICO)

Details:

See P1020 (fixed frequency selection Bit 0) for most common settings

P1022[3]	**BI: Fixed freq. selection Bit 2**			**Min:** 0:0	Level
	CStat: CT	**Datatype:** U32	**Unit:** -	**Def:** 0:0	**3**
	P-Group: COMMANDS	**Active:** first confirm	**QuickComm.:** No	**Max:** 4000:0	

Defines origin of fixed frequency selection.

Index:

P1022[0] : 1st. Command data set (CDS)
P1022[1] : 2nd. Command data set (CDS)
P1022[2] : 3rd. Command data set (CDS)

Dependency:

Accessible only if P0701 - P0706 = 99 (function of digital inputs = BICO)

Details:

See P1020 (fixed frequency selection Bit 0) for most common settings

P1023[3]	**BI: Fixed freq. selection Bit 3**			**Min:** 0:0	Level
	CStat: CT	**Datatype:** U32	**Unit:** -	**Def:** 722:3	**3**
	P-Group: COMMANDS	**Active:** first confirm	**QuickComm.:** No	**Max:** 4000:0	

Defines origin of fixed frequency selection.

Index:

P1023[0] : 1st. Command data set (CDS)
P1023[1] : 2nd. Command data set (CDS)
P1023[2] : 3rd. Command data set (CDS)

Dependency:

Accessible only if P0701 - P0706 = 99 (function of digital inputs = BICO)

Details:

See P1020 (fixed frequency selection Bit 0) for most common settings

r1024	**CO: Act. fixed frequency**			**Min:** -	Level
		Datatype: Float	**Unit:** Hz	**Def:** -	**3**
	P-Group: SETPOINT			**Max:** -	

Displays sum total of selected fixed frequencies.

P1025[3]	**Fixed frequency mode - Bit 4**			**Min:** 1	Level
	CStat: CT	**Datatype:** U16	**Unit:** -	**Def:** 1	**3**
	P-Group: SETPOINT	**Active:** first confirm	**QuickComm.:** No	**Max:** 2	

Direct selection or direct selection + ON for bit 4

Possible Settings:

1 Direct selection
2 Direct selection + ON command

Index:

P1025[0] : 1st. Command data set (CDS)
P1025[1] : 2nd. Command data set (CDS)
P1025[2] : 3rd. Command data set (CDS)

Details:

See parameter P1001 for description of how to use fixed frequencies.

P1026[3]	**BI: Fixed freq. selection Bit 4**			**Min:** 0:0	Level
	CStat: CT	**Datatype:** U32	**Unit:** -	**Def:** 722:4	**3**
	P-Group: COMMANDS	**Active:** first confirm	**QuickComm.:** No	**Max:** 4000:0	

Defines origin of fixed frequency selection.

Index:

P1026[0] : 1st. Command data set (CDS)
P1026[1] : 2nd. Command data set (CDS)
P1026[2] : 3rd. Command data set (CDS)

Dependency:

Accessible only if P0701 - P0706 = 99 (function of digital inputs = BICO).

Details:

See P1020 (fixed frequency selection Bit 0) for most common settings.

P1027[3]	**Fixed frequency mode - Bit 5**			**Min:** 1	Level
	CStat: CT	**Datatype:** U16	**Unit:** -	**Def:** 1	**3**
	P-Group: SETPOINT	**Active:** first confirm	**QuickComm.:** No	**Max:** 2	

direct selection or direct selection + ON for bit 5

Possible Settings:

1 Direct selection
2 Direct selection + ON command

Index:

P1027[0] : 1st. Command data set (CDS)
P1027[1] : 2nd. Command data set (CDS)
P1027[2] : 3rd. Command data set (CDS)

Details:

See parameter P1001 for description of how to use fixed frequencies.

P1028[3]	**BI: Fixed freq. selection Bit 5**			**Min:** 0:0	Level
	CStat: CT	**Datatype:** U32	**Unit:** -	**Def:** 722:5	**3**
	P-Group: COMMANDS	**Active:** first confirm	**QuickComm.:** No	**Max:** 4000:0	

Defines origin of fixed frequency selection.

Index:

P1028[0] : 1st. Command data set (CDS)
P1028[1] : 2nd. Command data set (CDS)
P1028[2] : 3rd. Command data set (CDS)

Dependency:

Accessible only if P0701 - P0706 = 99 (function of digital inputs = BICO).

Details:

See P1020 (fixed frequency selection Bit 0) for most common settings.

3.18 Motorized potentiometer (MOP)

P1031[3]	Setpoint memory of the MOP			Min: 0	Level
	CStat: CUT	Datatype: U16	Unit: -	Def: 0	3
	P-Group: SETPOINT	Active: Immediately	QuickComm.: No	Max: 1	

Saves last motor potentiometer setpoint (MOP) that was active before OFF command or power down.

Possible Settings:

0 MOP setpoint will not be stored
1 MOP setpoint will be stored (P1040 is updated)

Index:

P1031[0] : 1st. Drive data set (DDS)
P1031[1] : 2nd. Drive data set (DDS)
P1031[2] : 3rd. Drive data set (DDS)

Note:

On next ON command, motor potentiometer setpoint will be the saved value in parameter P1040 (setpoint of the MOP).

P1032	Inhibit negative MOP setpoints			Min: 0	Level
	CStat: CT	Datatype: U16	Unit: -	Def: 1	3
	P-Group: SETPOINT	Active: first confirm	QuickComm.: No	Max: 1	

This parameter suppresses negative setpoints of the MOP output r1050.

Possible Settings:

0 Neg. MOP setpoint is allowed
1 Neg. MOP setpoint inhibited

Note:

The reversing functions (e.g. BOP-Reverse button if P0700 = 1) are not affected by the settings of P1032. Use P1110 to fully prevent change of direction in setpoint channel.

P1035[3]	BI: Enable MOP (UP-command)			Min: 0:0	Level
	CStat: CT	Datatype: U32	Unit: -	Def: 19:13	3
	P-Group: COMMANDS	Active: first confirm	QuickComm.: No	Max: 4000:0	

Defines source for motor potentiometer setpoint increase frequency.

Index:

P1035[0] : 1st. Command data set (CDS)
P1035[1] : 2nd. Command data set (CDS)
P1035[2] : 3rd. Command data set (CDS)

Common Settings:

722.0 = Digital input 1 (requires P0701 to be set to 99, BICO)
722.1 = Digital input 2 (requires P0702 to be set to 99, BICO)
722.2 = Digital input 3 (requires P0703 to be set to 99, BICO)
722.3 = Digital input 4 (requires P0704 to be set to 99, BICO)
722.4 = Digital input 5 (requires P0705 to be set to 99, BICO)
722.5 = Digital input 6 (requires P0706 to be set to 99, BICO)
722.6 = Digital input 7 (via analog input 1, requires P0707 to be set to 99)
722.7 = Digital input 8 (via analog input 2, requires P0708 to be set to 99)
19.D = MOP up via BOP

P1036[3]	BI: Enable MOP (DOWN-command)			Min: 0:0	Level
	CStat: CT	Datatype: U32	Unit: -	Def: 19:14	3
	P-Group: COMMANDS	Active: first confirm	QuickComm.: No	Max: 4000:0	

Defines source for motor potentiometer setpoint decrease frequency.

Index:

P1036[0] : 1st. Command data set (CDS)
P1036[1] : 2nd. Command data set (CDS)
P1036[2] : 3rd. Command data set (CDS)

Common Settings:

722.0 = Digital input 1 (requires P0701 to be set to 99, BICO)
722.1 = Digital input 2 (requires P0702 to be set to 99, BICO)
722.2 = Digital input 3 (requires P0703 to be set to 99, BICO)
722.3 = Digital input 4 (requires P0704 to be set to 99, BICO)
722.4 = Digital input 5 (requires P0705 to be set to 99, BICO)
722.5 = Digital input 6 (requires P0706 to be set to 99, BICO)
722.6 = Digital input 7 (via analog input 1, requires P0707 to be set to 99)
722.7 = Digital input 8 (via analog input 2, requires P0708 to be set to 99)
19.E = MOP down via BOP

P1040[3]	**Setpoint of the MOP**			**Min:** -650.00	Level
	CStat: CUT	**Datatype:** Float	**Unit:** Hz	**Def:** 5.00	**2**
	P-Group: SETPOINT	**Active:** Immediately	**QuickComm.:** No	**Max:** 650.00	

Determines setpoint for motor potentiometer control (P1000 = 1).

Index:

P1040[0] : 1st. Drive data set (DDS)
P1040[1] : 2nd. Drive data set (DDS)
P1040[2] : 3rd. Drive data set (DDS)

Note:

- If motor potentiometer setpoint is selected either as main setpoint or additional setpoint, the reverse direction will be inhibited by default of P1032 (inhibit reverse direction of MOP).
- If the 'higher' or 'lower' key (e.g. on the BOP) is pressed briefly (< 1 second) the frequency setpoint is changed in increments of 0.1 Hz.
  The setpoint change is accelerated if the keys are pressed for longer.
- To re-enable reverse direction, set P1032 = 0.
- For BOP control P1040 must be greater than the min. frequency P1080.

r1050	**CO: Act. Output freq. of the MOP**			**Min:** -	Level
		Datatype: Float	**Unit:** Hz	**Def:** -	**3**
	P-Group: SETPOINT			**Max:** -	

Displays output frequency of motor potentiometer setpoint ([Hz]).

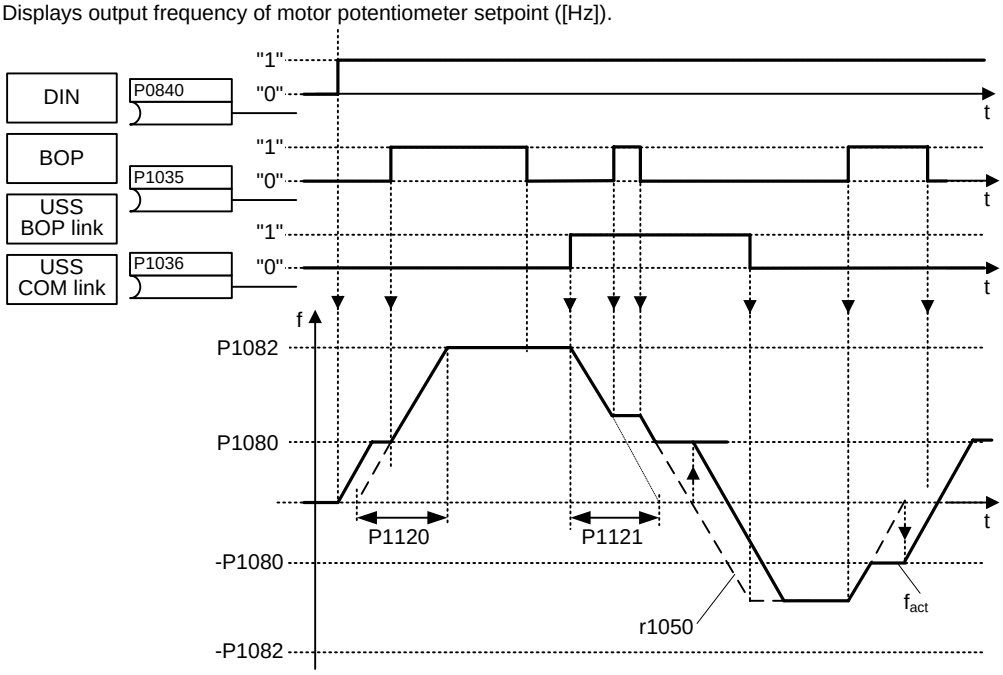

Possible parameter settings for the selection of MOP:

	Selection	MOP up	MOP down
DIN	P0719 = 0, P0700 = 2, P1000 = 1 or P0719 = 1, P0700 = 2	P0702 = 13 (DIN2)	P0703 = 14 (DIN3)
BOP	P0719 = 0, P0700 = 1, P1000 = 1 or P0719 = 1, P0700 = 1 or P0719 = 11	UP button	DOWN button
USS on BOP link	P0719 = 0, P0700 = 4, P1000 = 1 or P0719 = 1, P0700 = 4 or P0719 = 41	USS control word r2032 Bit13	USS control word r2032 Bit14
USS on COM link	P0719 = 0, P0700 = 5, P1000 = 1 or P0719 = 1, P0700 = 5 or P0719 = 51	USS control word r2036 Bit13	USS control word r2036 Bit14
CB	P0719 = 0, P0700 = 6, P1000 = 1 or P0719 = 1, P0700 = 6 or P0719 = 61	CB control word r2090 Bit13	CB control word r2090 Bit14

3.19 Setpoint channel

P1070[3]	CI: Main setpoint				Min: 0:0	Level 3
	CStat: CT	Datatype: U32	Unit: -		Def: 755:0	
	P-Group: SETPOINT	Active: first confirm	QuickComm.: No		Max: 4000:0	

Defines source of main setpoint.

Index:

P1070[0] : 1st. Command data set (CDS)
P1070[1] : 2nd. Command data set (CDS)
P1070[2] : 3rd. Command data set (CDS)

Common Settings:

755 = Analog input 1 setpoint
1024 = Fixed frequency setpoint
1050 = Motor potentiometer (MOP) setpoint

P1071[3]	CI: Main setpoint scaling				Min: 0:0	Level 3
	CStat: CT	Datatype: U32	Unit: -		Def: 1:0	
	P-Group: SETPOINT	Active: first confirm	QuickComm.: No		Max: 4000:0	

Defines source of the main setpoint scaling.

Index:

P1071[0] : 1st. Command data set (CDS)
P1071[1] : 2nd. Command data set (CDS)
P1071[2] : 3rd. Command data set (CDS)

Common Settings:

755 = Analog input 1 setpoint
1024 = Fixed frequency setpoint
1050 = Motor potentiometer (MOP) setpoint

P1074[3]	BI: Disable additional setpoint				Min: 0:0	Level 3
	CStat: CUT	Datatype: U32	Unit: -		Def: 0:0	
	P-Group: COMMANDS	Active: first confirm	QuickComm.: No		Max: 4000:0	

Disables additional setpoint

Index:

P1074[0] : 1st. Command data set (CDS)
P1074[1] : 2nd. Command data set (CDS)
P1074[2] : 3rd. Command data set (CDS)

Common Settings:

722.0 = Digital input 1 (requires P0701 to be set to 99, BICO)
722.1 = Digital input 2 (requires P0702 to be set to 99, BICO)
722.2 = Digital input 3 (requires P0703 to be set to 99, BICO)
722.3 = Digital input 4 (requires P0704 to be set to 99, BICO)
722.4 = Digital input 5 (requires P0705 to be set to 99, BICO)
722.5 = Digital input 6 (requires P0706 to be set to 99, BICO)
722.6 = Digital input 7 (via analog input 1, requires P0707 to be set to 99)
722.7 = Digital input 8 (via analog input 2, requires P0708 to be set to 99))

P1075[3]	CI: Additional setpoint				Min: 0:0	Level 3
	CStat: CT	Datatype: U32	Unit: -		Def: 0:0	
	P-Group: SETPOINT	Active: first confirm	QuickComm.: No		Max: 4000:0	

Defines source of the additional setpoint (to be added to main setpoint).

Index:

P1075[0] : 1st. Command data set (CDS)
P1075[1] : 2nd. Command data set (CDS)
P1075[2] : 3rd. Command data set (CDS)

Common Settings:

755 = Analog input 1 setpoint
1024 = Fixed frequency setpoint
1050 = Motor potentiometer (MOP) setpoint

P1076[3]	CI: Additional setpoint scaling				Min: 0:0	Level 3
	CStat: CT	Datatype: U32	Unit: -		Def: 1:0	
	P-Group: SETPOINT	Active: first confirm	QuickComm.: No		Max: 4000:0	

Defines source of scaling for additional setpoint (to be added to main setpoint).

Index:

P1076[0] : 1st. Command data set (CDS)
P1076[1] : 2nd. Command data set (CDS)
P1076[2] : 3rd. Command data set (CDS)

Common Settings:

1 = Scaling of 1.0 (100%)
755 = Analog input 1 Setpoint
1024 = Fixed Frequency Setpoint
1050 = MOP Setpoint

r1078	**CO: Total frequency setpoint**			**Min:** -	Level **3**
		Datatype: Float	**Unit:** Hz	**Def:** -	
	P-Group: SETPOINT			**Max:** -	

Displays sum of main and additional setpoints in [Hz].

P1080[3]	**Min. frequency**			**Min:** 0.00	Level **1**
	CStat: CUT	**Datatype:** Float	**Unit:** Hz	**Def:** 0.00	
	P-Group: SETPOINT	**Active:** Immediately	**QuickComm.:** Yes	**Max:** 650.00	

Sets minimum motor frequency [Hz] at which motor will run irrespective of frequency setpoint.

The minimum frequency P1080 represents a masking frequency of 0 Hz for all frequency target value sources (e.g. ADC, MOP, FF, USS), with the exception of the JOG target value source (analogous to P1091). Thus the frequency band +/- P1080 is run through in optimum time by means of the acceleration/deceleration ramps. Dwelling in the frequency band is not possible (see example).

Furthermore, an undershoot of the actual frequency f_act below min. frequency P1080 is output by the following signal function.

Index:

P1080[0] : 1st. Drive data set (DDS)
P1080[1] : 2nd. Drive data set (DDS)
P1080[2] : 3rd. Drive data set (DDS)

Example:

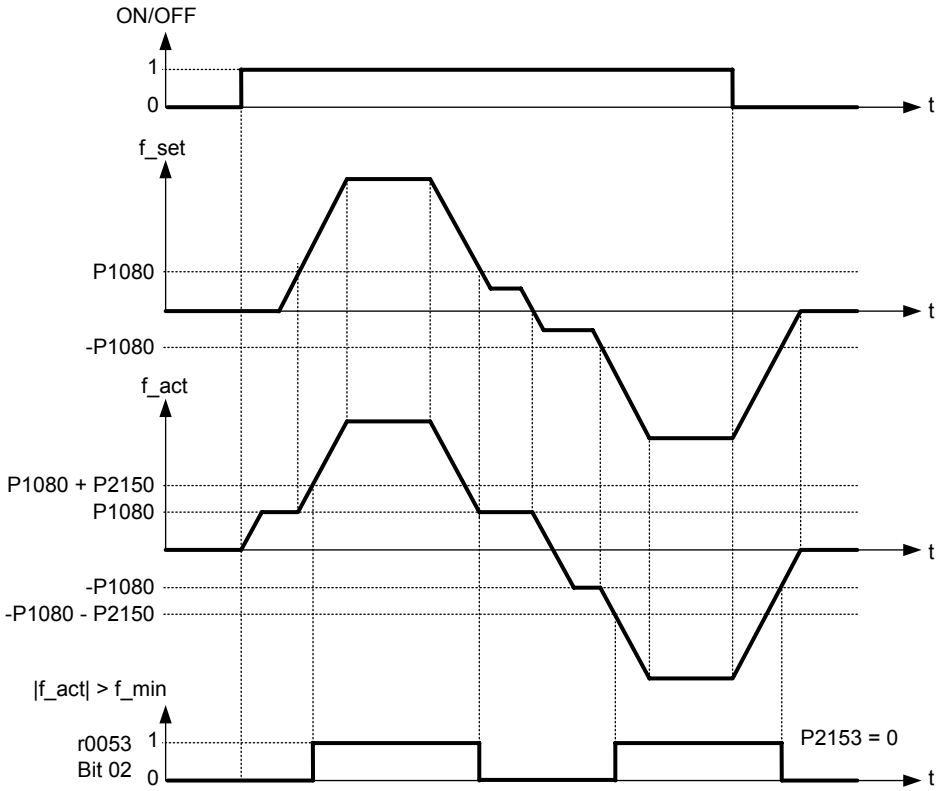

Note:

Value set here is valid both for clockwise and for anticlockwise rotation.

Under certain conditions (e.g. ramping, current limiting), motor can run below minimum frequency.

P1082[3]	**Max. frequency**			**Min:** 0.00	Level
	CStat: CT	**Datatype:** Float	**Unit:** Hz	**Def:** 50.00	**1**
	P-Group: SETPOINT	**Active:** first confirm	**QuickComm.:** Yes	**Max:** 650.00	

Sets maximum motor frequency [Hz] at which motor will run irrespective of the frequency setpoint. The value set here is valid for both clockwise and anticlockwise rotation.
If 1082 is changed, and Quick Commissioning carried out, then P2000 is changed accordingly.

Futhermore, the monitoring function |f_act| >= P1082 (r0052 Bit10, see example below) is affected by this parameter.

Index:

P1082[0] : 1st. Drive data set (DDS)
P1082[1] : 2nd. Drive data set (DDS)
P1082[2] : 3rd. Drive data set (DDS)

Example:

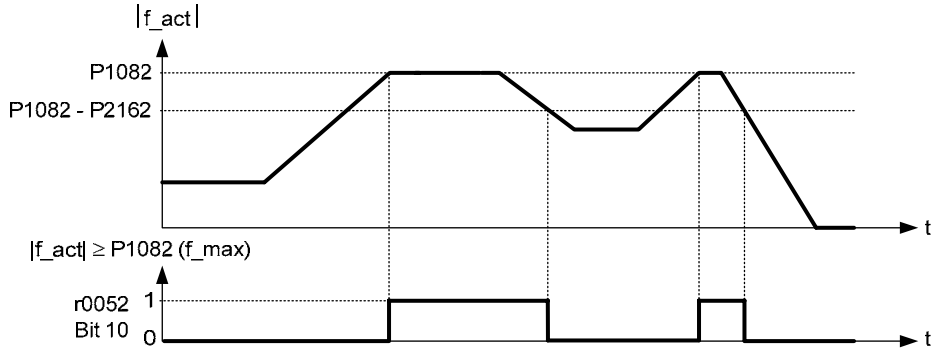

Dependency:

The maximal value of motor frequency P1082 is limited to pulse frequency P1800. P1082 is dependent on the derating characteristic as followed:

	P1800			
	2 kHz	4 kHz	6 kHz	8 - 16 kHz
f_{max} P1082	0 - 133.3 Hz	0 - 266.6 Hz	0 - 400 Hz	0 - 650 Hz

The resultant value is displayed in r1084 (resultant maximum frequency).

The maximum output frequency of inverter can be exceeded if one of the following is active:

- $p1335 \neq 0$ (Slip compensation active) :

$$fmax(p1335) = fmax + fslip,max = p1082 + \frac{p1336}{100} \cdot \frac{r0330}{100} \cdot p0310$$

- $p1200 \neq 0$ (Flying restart active) :

$$fmax(p1200) = fmax + 2 \cdot fslip,nom = p1082 + 2 \cdot \frac{r0330}{100} \cdot p0310$$

Note:

When using the setpoint source

- Analog Input
- USS
- CB (e.g. PROFIBUS)

The setpoint frequency (in Hz) is cyclically calculated using a percentage value (e.g. for the analog input r0754) or a hexadecimal value (e.g. for the USS r2018[1]) and the reference frequency P2000.

If for example P1082 = 80 Hz, P2000 = 50 Hz and the analog input is parameterised with P0757 = 0 V, P0758 = 0 %, P0759 = 10 V, P0760 = 100 %, a setpoint frequency of 50 Hz will be applied at 10 V of the analog input.

P1091[3]	**Skip frequency 1**				**Min:** 0.00	Level
	CStat: CUT	**Datatype:** Float	**Unit:** Hz		**Def:** 0.00	**3**
	P-Group: SETPOINT	**Active:** Immediately	**QuickComm.:** No		**Max:** 650.00	

Defines skip frequency 1 which avoids effects of mechanical resonance and suppresses frequencies within +/- P1101 (skip frequency bandwidth).

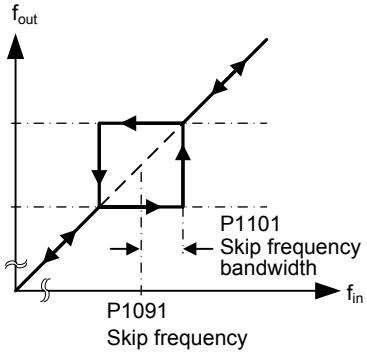

Index:

P1091[0] : 1st. Drive data set (DDS)
P1091[1] : 2nd. Drive data set (DDS)
P1091[2] : 3rd. Drive data set (DDS)

Notice:

- Stationary operation is not possible within the suppressed frequency range; the range is merely passed through (on the ramp).

- For example, if P1091 = 10 Hz and P1101 = 2 Hz, it is not possible to operate continuously between 10 Hz +/- 2 Hz (i.e. between 8 and 12 Hz).

P1092[3]	**Skip frequency 2**				**Min:** 0.00	Level
	CStat: CUT	**Datatype:** Float	**Unit:** Hz		**Def:** 0.00	**3**
	P-Group: SETPOINT	**Active:** Immediately	**QuickComm.:** No		**Max:** 650.00	

Defines skip frequency 2 which avoids effects of mechanical resonance and suppresses frequencies within +/- P1101 (skip frequency bandwidth).

Index:

P1092[0] : 1st. Drive data set (DDS)
P1092[1] : 2nd. Drive data set (DDS)
P1092[2] : 3rd. Drive data set (DDS)

Details:

See P1091 (skip frequency 1).

P1093[3]	**Skip frequency 3**				**Min:** 0.00	Level
	CStat: CUT	**Datatype:** Float	**Unit:** Hz		**Def:** 0.00	**3**
	P-Group: SETPOINT	**Active:** Immediately	**QuickComm.:** No		**Max:** 650.00	

Defines skip frequency 3 which avoids effects of mechanical resonance and suppresses frequencies within +/- P1101 (skip frequency bandwidth).

Index:

P1093[0] : 1st. Drive data set (DDS)
P1093[1] : 2nd. Drive data set (DDS)
P1093[2] : 3rd. Drive data set (DDS)

Details:

See P1091 (skip frequency 1).

P1094[3]	**Skip frequency 4**				**Min:** 0.00	Level
	CStat: CUT	**Datatype:** Float	**Unit:** Hz		**Def:** 0.00	**3**
	P-Group: SETPOINT	**Active:** Immediately	**QuickComm.:** No		**Max:** 650.00	

Defines skip frequency 4 which avoids effects of mechanical resonance and suppresses frequencies within +/- P1101 (skip frequency bandwidth).

Index:

P1094[0] : 1st. Drive data set (DDS)
P1094[1] : 2nd. Drive data set (DDS)
P1094[2] : 3rd. Drive data set (DDS)

Details:

See P1091 (skip frequency 1).

P1101[3]	**Skip frequency bandwidth**			**Min:** 0.00	Level
	CStat: CUT	**Datatype:** Float	**Unit:** Hz	**Def:** 2.00	**3**
	P-Group: SETPOINT	**Active:** Immediately	**QuickComm.:** No	**Max:** 10.00	

Delivers frequency bandwidth to be applied to skip frequencies (in [Hz]).

Index:

P1101[0] : 1st. Drive data set (DDS)
P1101[1] : 2nd. Drive data set (DDS)
P1101[2] : 3rd. Drive data set (DDS)

Details:

See P1091 (skip frequency 1).

P1110[3]	**BI: Inhibit neg. freq. setpoint**			**Min:** 0:0	Level
	CStat: CT	**Datatype:** U32	**Unit:** -	**Def:** 1:0	**3**
	P-Group: COMMANDS	**Active:** first confirm	**QuickComm.:** No	**Max:** 4000:0	

This parameter suppresses negative setpoints. Therefore, modification of the motor direction is inhibited to the setpoint channel.

Index:

P1110[0] : 1st. Command data set (CDS)
P1110[1] : 2nd. Command data set (CDS)
P1110[2] : 3rd. Command data set (CDS)

Common Settings:

0 = Disabled
1 = Enabled

Notice:

Where

- If a min. frequency (P1080) and a negative setpoint are given, the motor is accelerated by a positive value in relationship to the min. frequency.
- This function does not disable the "reverse command functions" (e.g. Reverse, ON left); rather, a reverse command causes motor to run in the positive direction only, as described above.

P1110 = 1

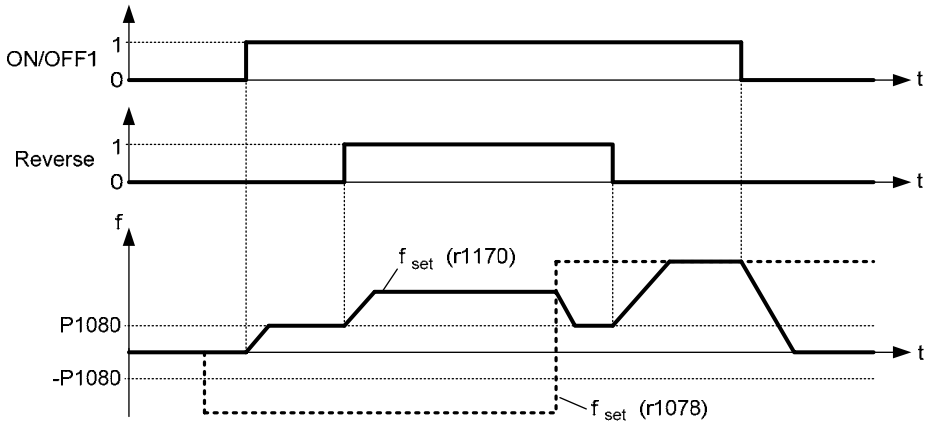

P1113[3]	**BI: Reverse**			**Min:** 0:0	Level
	CStat: CT	**Datatype:** U32	**Unit:** -	**Def:** 722:1	**3**
	P-Group: COMMANDS	**Active:** first confirm	**QuickComm.:** No	**Max:** 4000:0	

Defines source of reverse command.

Index:

P1113[0] : 1st. Command data set (CDS)
P1113[1] : 2nd. Command data set (CDS)
P1113[2] : 3rd. Command data set (CDS)

Common Settings:

722.0 = Digital input 1 (requires P0701 to be set to 99, BICO)
722.1 = Digital input 2 (requires P0702 to be set to 99, BICO)
722.2 = Digital input 3 (requires P0703 to be set to 99, BICO)
722.3 = Digital input 4 (requires P0704 to be set to 99, BICO)
722.4 = Digital input 5 (requires P0705 to be set to 99, BICO)
722.5 = Digital input 6 (requires P0706 to be set to 99, BICO)
19.B = Reverse via BOP

Dependency:

Active only when P0719 < 10. See parameter P0719 (Selection of command/setpoint source).

r1114	**CO: Freq. setp. after dir. ctrl.**			**Min:** -	Level
		Datatype: Float	**Unit:** Hz	**Def:** -	**3**
	P-Group: SETPOINT			**Max:** -	

Displays setpoint frequency after change of direction.

3.20 Ramp-function generator

r1119	**CO: Freq. setpoint before RFG**			**Min:** -	Level
		Datatype: Float	**Unit:** Hz	**Def:** -	**3**
	P-Group: SETPOINT			**Max:** -	

Displays output frequency after modification by other functions, e.g.:
- P1110 BI: Inhibit neg. freq. setpoint,
- P1091 - P1094 skip frequencies,
- P1080 Min. frequency,
- P1082 Max. frequency,
- limitations,
- etc.

P1120[3]	**Ramp-up time**			**Min:** 0.00	Level
	CStat: CUT	**Datatype:** Float	**Unit:** s	**Def:** 10.00	**1**
	P-Group: SETPOINT	**Active:** first confirm	**QuickComm.:** Yes	**Max:** 650.00	

Time taken for motor to accelerate from standstill up to maximum motor frequency (P1082) when no rounding is used.

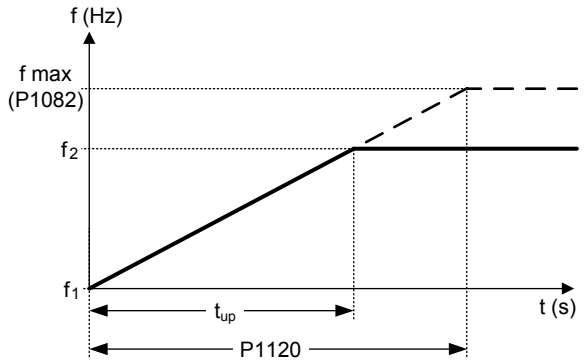

$$t_{up} = \frac{|f_2 - f_1|}{P1082} \cdot P1120$$

Setting the ramp-up time too short can cause the inverter to trip (overcurrent).

Index:

P1120[0] : 1st. Drive data set (DDS)
P1120[1] : 2nd. Drive data set (DDS)
P1120[2] : 3rd. Drive data set (DDS)

Note:

If an external frequency setpoint with set ramp rates is used (e.g. from a PLC). The best way to achieve optimum drive performance is to set ramp times in P1120 and P1121 slightly shorter than those of the PLC.

Notice:

Ramp times will be used as follows:
- P1060 / P1061 : JOG mode is active
- P1120 / P1121 : Normal mode (ON/OFF) is active
- P1060 / P1061 : Normal mode (ON/OFF) and P1124 is active

P1121[3]	**Ramp-down time**			**Min:** 0.00	Level
	CStat: CUT	**Datatype:** Float	**Unit:** s	**Def:** 30.00	**1**
	P-Group: SETPOINT	**Active:** first confirm	**QuickComm.:** Yes	**Max:** 650.00	

Time taken for motor to decelerate from maximum motor frequency (P1082) down to standstill when no rounding is used.

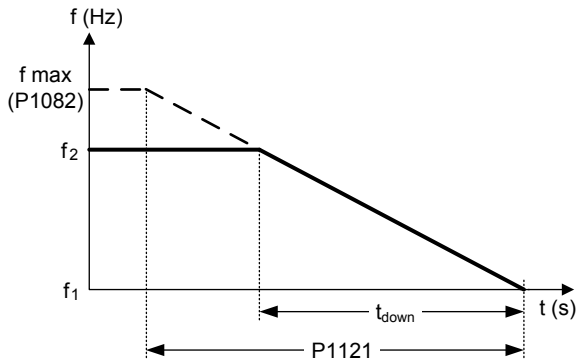

$$t_{down} = \frac{|f_2 - f_1|}{P1082} \cdot P1121$$

Index:

P1121[0] : 1st. Drive data set (DDS)
P1121[1] : 2nd. Drive data set (DDS)
P1121[2] : 3rd. Drive data set (DDS)

Notice:

Setting the ramp-down time too short can cause the inverter to trip (overcurrent (F0001) / overvoltage (F0002)).

Ramp times will be used as follows:

- P1120 / P1121 : Normal mode (ON/OFF) is active
- P1060 / P1061 : Normal mode (ON/OFF) and P1124 is active

P1130[3]	**Ramp-up initial rounding time**			**Min:** 0.00	Level
	CStat: CUT	**Datatype:** Float	**Unit:** s	**Def:** 0.00	**2**
	P-Group: SETPOINT	**Active:** first confirm	**QuickComm.:** No	**Max:** 40.00	

Defines initial rounding time in seconds as shown on the diagram below.

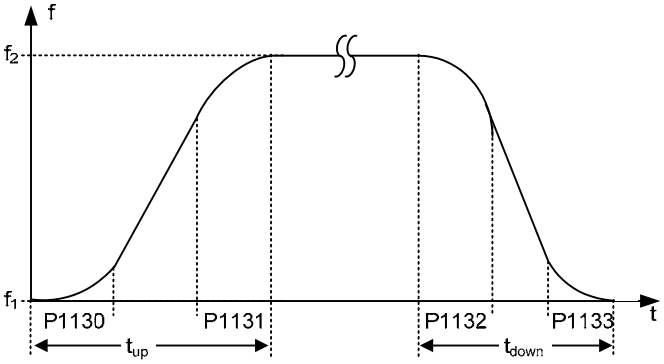

where:

for $\frac{f_2 - f_1}{P1082} \cdot P1120 \geq \frac{1}{2}(P1130 + P1131)$

$$t_{up} = \frac{1}{2}(P1130 + P1131) + \frac{f_2 - f_1}{P1082} \cdot P1120$$

for $\frac{f_2 - f_1}{P1082} \cdot P1121 \geq \frac{1}{2}(P1132 + P1133)$

$$t_{down} = \frac{1}{2}(P1132 + P1133) + \frac{f_2 - f_1}{P1082} \cdot P1121$$

Where the rounding times are increased to be greater than the ramp period (see diagram below),

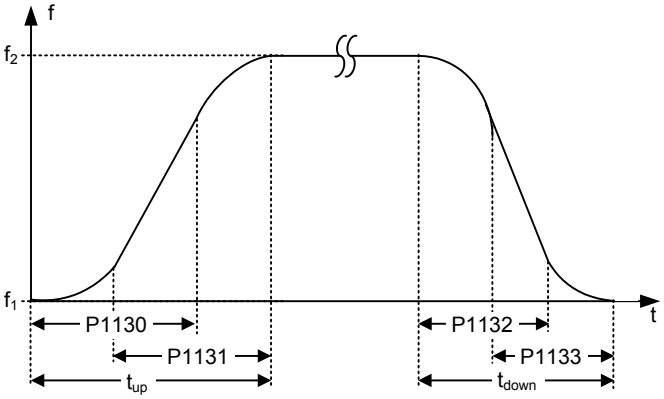

then the ramp period is determined by the following equations:

$$t_{down} = \sqrt{\left(\frac{2 \cdot (f_2 - f_1) \cdot (P1120 \cdot P1132^2)}{f_{max} \cdot (P1132 + P1133)}\right)} \cdot \left(1 + \frac{P1133}{P1132}\right)$$

$$t_{up} = \sqrt{\left(\frac{2 \cdot (f_2 - f_1) \cdot (P1120 \cdot P1130^2)}{f_{max} \cdot (P1130 + P1131)}\right)} \cdot \left(1 + \frac{P1131}{P1130}\right)$$

Index:

P1130[0] : 1st. Drive data set (DDS)
P1130[1] : 2nd. Drive data set (DDS)
P1130[2] : 3rd. Drive data set (DDS)

Note:

- If short or zero ramp times (P1120, P1121 < P1130, P1131, P1132, P1133) are set, the total ramp up time (t_up) or ramp down time (t_down) will not depend on P1130.
- See equations above for valid conditions to calculate t_up and t_down.
- Rounding times are recommended, since they prevent an abrupt response, thus avoiding detrimental effects on the mechanics.
- Rounding times are not recommended when analog inputs are used, since they would result in overshoot/undershoot in the inverter response.

P1131[3]	**Ramp-up final rounding time**			**Min:** 0.00	Level
	CStat: CUT	**Datatype:** Float	**Unit:** s	**Def:** 0.00	**2**
	P-Group: SETPOINT	**Active:** first confirm	**QuickComm.:** No	**Max:** 40.00	

Defines rounding time at end of ramp-up as shown in P1130 (ramp-up initial rounding time).

Index:

P1131[0] : 1st. Drive data set (DDS)
P1131[1] : 2nd. Drive data set (DDS)
P1131[2] : 3rd. Drive data set (DDS)

Details:

See parameter P1130.

P1132[3]	**Ramp-down initial rounding time**			**Min:** 0.00	Level
	CStat: CUT	**Datatype:** Float	**Unit:** s	**Def:** 0.00	**2**
	P-Group: SETPOINT	**Active:** first confirm	**QuickComm.:** No	**Max:** 40.00	

Defines rounding time at start of ramp-down as shown in P1130 (ramp-up initial rounding time).

Index:

P1132[0] : 1st. Drive data set (DDS)
P1132[1] : 2nd. Drive data set (DDS)
P1132[2] : 3rd. Drive data set (DDS)

Details:

See parameter P1130.

P1133[3]	**Ramp-down final rounding time**			**Min:** 0.00	Level
	CStat: CUT	**Datatype:** Float	**Unit:** s	**Def:** 0.00	**2**
	P-Group: SETPOINT	**Active:** first confirm	**QuickComm.:** No	**Max:** 40.00	

Defines rounding time at end of ramp-down as shown in P1130 (ramp-up initial rounding time).

Index:

P1133[0] : 1st. Drive data set (DDS)
P1133[1] : 2nd. Drive data set (DDS)
P1133[2] : 3rd. Drive data set (DDS)

Details:

See parameter P1130.

P1134[3]	**Rounding type**			**Min:** 0	Level
	CStat: CUT	**Datatype:** U16	**Unit:** -	**Def:** 0	**2**
	P-Group: SETPOINT	**Active:** Immediately	**QuickComm.:** No	**Max:** 1	

Defines the smoothing which is active by setpoint modifications during acceleration or deceleration (e.g. new setpoint, OFF1, OFF3, REV).

This smoothing is applied, if the motor is ramped-up or ramped-down and
- P1134 = 0,
- P1132 > 0, P1133 > 0 and
- the setpoint is not yet reached.

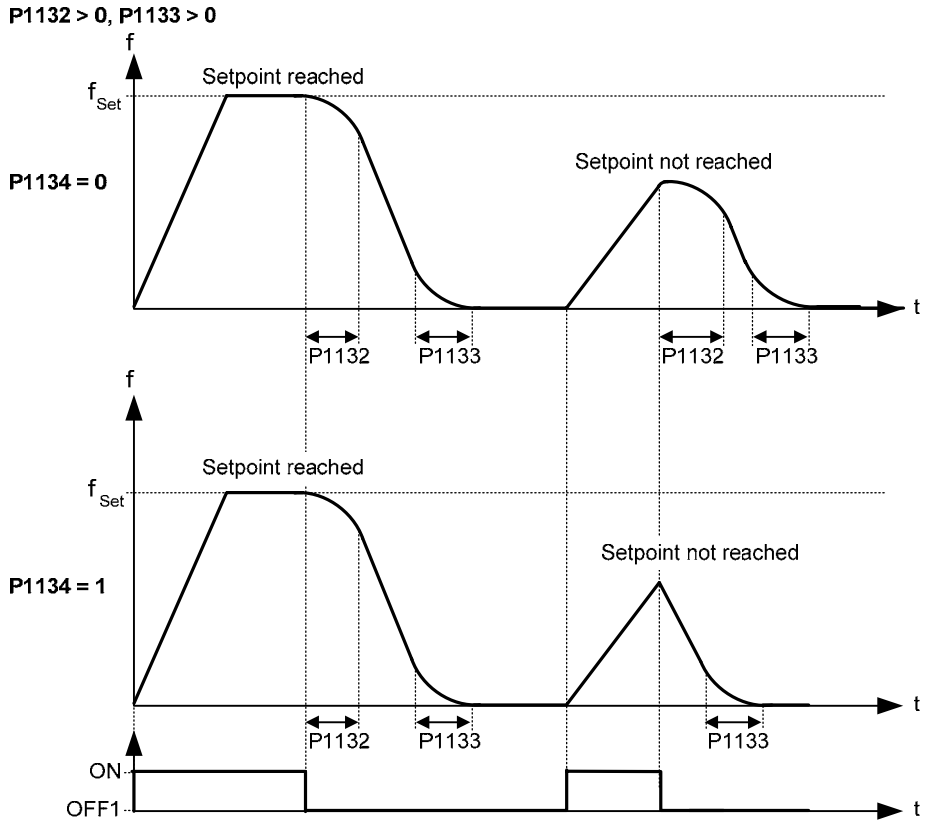

Possible Settings:

0 Continuous smoothing
1 Discontinuous smoothing

Index:

P1134[0] : 1st. Drive data set (DDS)
P1134[1] : 2nd. Drive data set (DDS)
P1134[2] : 3rd. Drive data set (DDS)

Dependency:

No effect until P1132 (Ramp-down initial rounding time) or P1133 (Ramp-down final rounding time) > 0 s.

P1135[3]	**OFF3 ramp-down time**			**Min:** 0.00	Level
	CStat: CUT	**Datatype:** Float	**Unit:** s	**Def:** 5.00	**2**
	P-Group: SETPOINT	**Active:** first confirm	**QuickComm.:** Yes	**Max:** 650.00	

Defines ramp-down time from maximum frequency to standstill for OFF3 command.

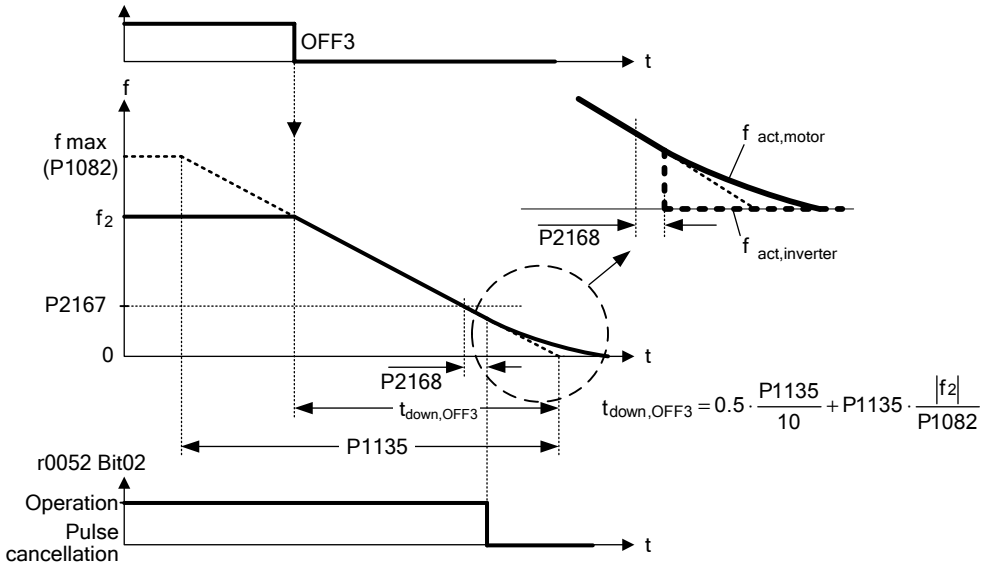

$$t_{down,OFF3} = 0.5 \cdot \frac{P1135}{10} + P1135 \cdot \frac{|f_2|}{P1082}$$

Index:

P1135[0] : 1st. Drive data set (DDS)
P1135[1] : 2nd. Drive data set (DDS)
P1135[2] : 3rd. Drive data set (DDS)

Note:

This time may be exceeded if the VDC_max. level is reached.

P1140[3]	**BI: RFG enable**			**Min:** 0:0	Level
	CStat: CT	**Datatype:** U32	**Unit:** -	**Def:** 1:0	**3**
	P-Group: COMMANDS	**Active:** first confirm	**QuickComm.:** No	**Max:** 4000:0	

Defines command source of RFG enable command (RFG: ramp function generator). If binary input is equal to zero then the RFG output will be set immediately to 0.

Index:

P1140[0] : 1st. Command data set (CDS)
P1140[1] : 2nd. Command data set (CDS)
P1140[2] : 3rd. Command data set (CDS)

P1141[3]	**BI: RFG start**			**Min:** 0:0	Level
	CStat: CT	**Datatype:** U32	**Unit:** -	**Def:** 1:0	**3**
	P-Group: COMMANDS	**Active:** first confirm	**QuickComm.:** No	**Max:** 4000:0	

Defines command source of RFG start command (RFG: ramp function generator). If binary input is equal to zero then the RFG output is held at it present value.

Index:

P1141[0] : 1st. Command data set (CDS)
P1141[1] : 2nd. Command data set (CDS)
P1141[2] : 3rd. Command data set (CDS)

P1142[3]	**BI: RFG enable setpoint**			**Min:** 0:0	Level
	CStat: CT	**Datatype:** U32	**Unit:** -	**Def:** 1:0	**3**
	P-Group: COMMANDS	**Active:** first confirm	**QuickComm.:** No	**Max:** 4000:0	

Defines command source of RFG enable setpoint command (RFG: ramp function generator). If binary input is equal to zero then the RFG input will be set to zero and the RFG output will be ramp-down to zero.

Index:

P1142[0] : 1st. Command data set (CDS)
P1142[1] : 2nd. Command data set (CDS)
P1142[2] : 3rd. Command data set (CDS)

r1170	**CO: Frequency setpoint after RFG**			**Min:** -	Level
		Datatype: Float	**Unit:** Hz	**Def:** -	**3**
	P-Group: SETPOINT			**Max:** -	

Displays overall frequency setpoint after ramp generator.

3.21 Flying restart

P1200	**Flying start**				**Min:** 0	Level
	CStat: CUT	**Datatype:** U16	**Unit:** -		**Def:** 0	**3**
	P-Group: FUNC	**Active:** first confirm	**QuickComm.:** No		**Max:** 6	

Starts inverter onto a spinning motor by rapidly changing the output frequency of the inverter until the actual motor speed has been found. Then, the motor runs up to setpoint using the normal ramp time.

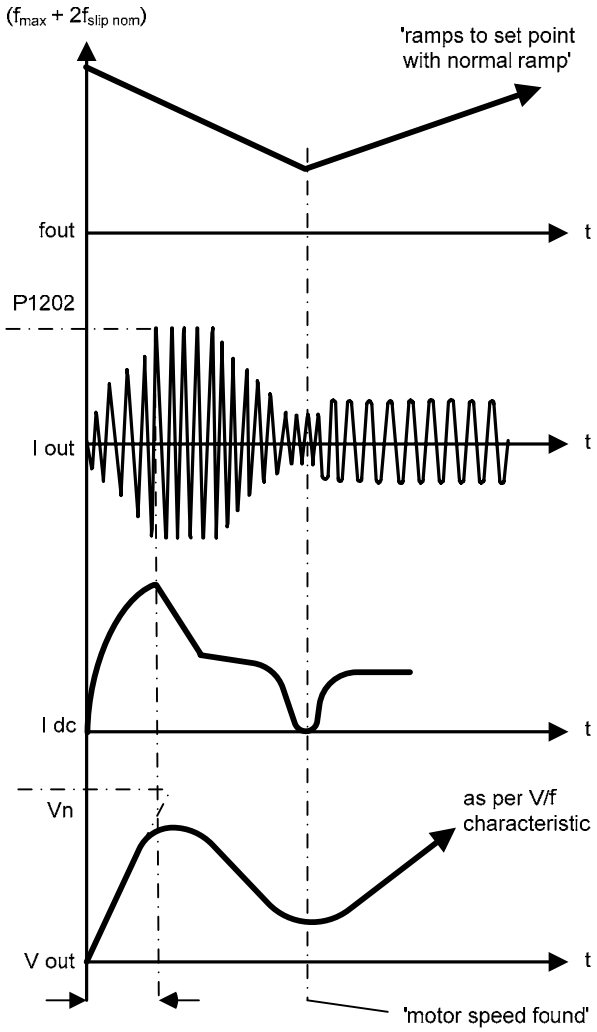

Possible Settings:

0 Flying start disabled
1 Flying start is always active, start in direction of setpoint
2 Flying start is active if power on, fault, OFF2, start in direction of setpoint
3 Flying start is active if fault, OFF2, start in direction of setpoint
4 Flying start is always active, only in direction of setpoint
5 Flying start is active if power on, fault, OFF2, only in direction of setpoint
6 Flying start is active if fault, OFF2, only in direction of setpoint

Note:

- Useful for motors with high inertia loads.
- Settings 1 to 3 search in both directions.
- Settings 4 to 6 search only in direction of setpoint.
- Flying start must be used in cases where the motor may still be turning (e.g. after a short mains break) or can be driven by the load. Otherwise, overcurrent trips will occur.

P1202[3]	**Motor-current: Flying start**			**Min:** 10	Level
	CStat: CUT	**Datatype:** U16	**Unit:** %	**Def:** 100	**3**
	P-Group: FUNC	**Active:** first confirm	**QuickComm.:** No	**Max:** 200	

Defines search current used for flying start. Value is in [%] based on rated motor current (P0305).

Index:

P1202[0] : 1st. Drive data set (DDS)
P1202[1] : 2nd. Drive data set (DDS)
P1202[2] : 3rd. Drive data set (DDS)

Note:

- If the search current is reduced, the flying restart behavior can be improved if the system inertia is not very high.

P1203[3]	**Search rate: Flying start**			**Min:** 10	Level
	CStat: CUT	**Datatype:** U16	**Unit:** %	**Def:** 100	**3**
	P-Group: FUNC	**Active:** first confirm	**QuickComm.:** No	**Max:** 200	

Sets factor by which the output frequency changes during flying start to synchronize with turning motor. This value is entered in [%] defines the reciprocal initial gradient in the search sequence (see curve below). Parameter P1203 influences the time taken to search for the motor frequency.

The search time is the time taken to search through all frequencies between max. frequency P1082 + 2 x f_slip to 0 Hz.

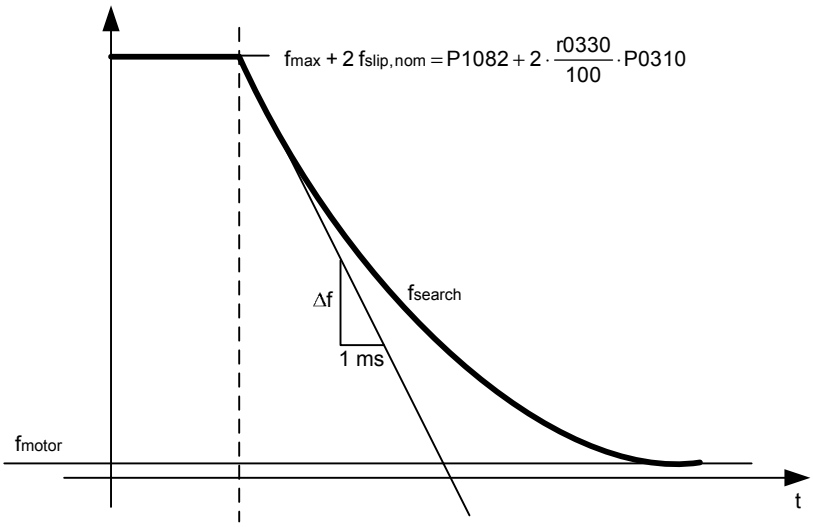

$$P1203[\%] = \frac{\Delta t\,[ms]}{\Delta f\,[Hz]} \cdot \frac{f_{slip,nom}\,[Hz]}{1\,[ms]} \cdot 2\,[\%] \quad \Rightarrow \quad \Delta f = \frac{2\,[\%]}{P1203[\%]} \cdot \frac{r0330}{100} \cdot P0310$$

P1203 = 100 % is defined as giving a rate of 2 % of f_slip,nom / [ms].
P1203 = 200 % would result in a rate of frequency change of 1 % of f_slip,nom / [ms].

Index:

P1203[0] : 1st. Drive data set (DDS)
P1203[1] : 2nd. Drive data set (DDS)
P1203[2] : 3rd. Drive data set (DDS)

Example:

For a motor with 50 Hz, 1350 rpm, 100 % would produce a maximum search time of 600 ms. If the motor is turning, the motor frequency is found in a shorter time.

Note:

- A higher value produces a flatter gradient and thus a longer search time.
- A lower value has the opposite effect.

r1204	**CO/BO: Status word:Flying start**			**Min:** -	Level
		Datatype: U16	**Unit:** -	**Def:** -	**3**
	P-Group: FUNC			**Max:** -	

Bit parameter for checking and monitoring states during search, if V/f control mode is selected (see P1300).

Bitfields:

Bit00	Current applied	0	NO	1	YES
Bit01	Current could not be applied	0	NO	1	YES
Bit02	Voltage reduced	0	NO	1	YES
Bit03	Slope-filter started	0	NO	1	YES
Bit04	Current less threshold	0	NO	1	YES
Bit05	Current-minimum	0	NO	1	YES
Bit07	Speed could not be found	0	NO	1	YES
Bit08	Flying start active	0	NO	1	YES
Bit09	Flying start selected	0	NO	1	YES

3.22 Automatic restart

P1210	Automatic restart				Min: 0	Level
	CStat: CUT	Datatype: U16	Unit: -		Def: 1	3
	P-Group: FUNC	Active: first confirm	QuickComm.: No		Max: 6	

Configures automatic restart function

Possible Settings:

0	Disabled		
1	Trip reset after power on,	P1211	disabled
2	Restart after mains blackout,	P1211	disabled
3	Restart after mains brownout or fault,	P1211	enabled
4	Restart after mains brownout,	P1211	enabled
5	Restart after mains blackout and fault,	P1211	disabled
6	Restart after mains brown- /blackout or fault,	P1211	disabled

Dependency:

Automatic restart requires constant ON command via a digital input wire link.

Caution:

P1210 > 2 can cause the motor to restart automatically without toggling the ON command !

Notice:

A "mains brownout" is where the power in interrupted and re-applied before the display on the BOP (if one is fitted to the inverter) has gone dark (a very short mains break where the DC link has not fully collapsed).

A "mains blackout" is where the display has gone dark (a long mains break where the DC link has fully collapsed) before the power is re-applied.

P1210 = 0:
Automatic restart is disabled.

P1210 = 1:
The inverter will acknowledge (reset) faults i.e. it will reset a fault when the is re-applied. This means the inverter must be fully powered down, a brownout is not sufficed. The inverter will not run until the ON command has been toggled.

P1210 = 2:
The inverter will acknowledge the fault F0003 at power on after blackout and restarts the drive. It is necessary that the ON command is wired via digital input (DIN).

P1210 = 3:
For these settings it is fundamental that the drive only restarts if it has been in a RUN state at the time of the faults (F0003, etc.). The inverter will acknowledge the fault and restarts the drive after a blackout or bronwout. It is necessary that the ON command is wired via digital input (DIN).

P1210 = 4:
For these settings it is fundamental that the drive only restarts if it has been in a RUN state at the time of the fault (F0003). The inverter will acknowledge the fault and restarts the drive after a blackout or bronwout. It is necessary that the ON command is wired via digital input (DIN).

P1210 = 5:
The inverter will acknowledge the faults F0003 etc. at power on after blackout and restarts the drive. It is necessary that the ON command is wired via digital input (DIN).

P1210 = 6:
The inverter will acknowledge the faults (F0003 etc.) at power on after blackout or brownout and restarts the drive. It is necessary that the ON command is wired via digital input (DIN). Setting 6 causes the motor to restart immediately.

Following table presents an overview of parameter P1210 and its functionality.

P1210	ON always active (permanent)				ON in no-voltage condition	
	Fault F0003 on		All other faults on		All faults on	No faults on
	Blackout	Brownout	Blackout	Brownout	Blackout	Blackout
0	–	–	–	–	–	–
1	Fault acknowl.	–	Fault acknowl.	–	Fault acknowl.	–
2	Fault acknowl. + restart	–	–	–	–	Restart
3	Fault acknowl. + restart	Fault acknowl. + restart	Fault acknowl. + restart	Fault acknowl. + restart	Fault acknowl. + restart	–
4	Fault acknowl. + restart	Fault acknowl. + restart	–	–	–	–
5	Fault acknowl. + restart	–	Fault acknowl. + restart	–	Fault acknowl. + restart	Restart
6	Fault acknowl. + restart	Fault acknowl. + restart	Fault acknowl. + restart	Fault acknowl. + restart	Fault acknowl. + restart	Restart

Flying start must be used in cases where the motor may still be turning (e.g. after a short mains break) or can be driven by the load (P1200).

P1211 Number of restart attempts

CStat:	CUT	**Datatype:** U16	**Unit:** -	**Min:**	0
P-Group:	FUNC	**Active:** first confirm	**QuickComm.:** No	**Def:**	3
				Max:	10

Level **3**

Specifies number of times inverter will attempt to restart if automatic restart P1210 is activated.

P1212 Time to first restart

CStat:	CUT	**Datatype:** U16	**Unit:** s	**Min:**	0
P-Group:	FUNC	**Active:** first confirm	**QuickComm.:** No	**Def:**	30
				Max:	1000

Level **3**

Selects the time before the inverter is restarted for the first time if automatic restart P1210 is activated.

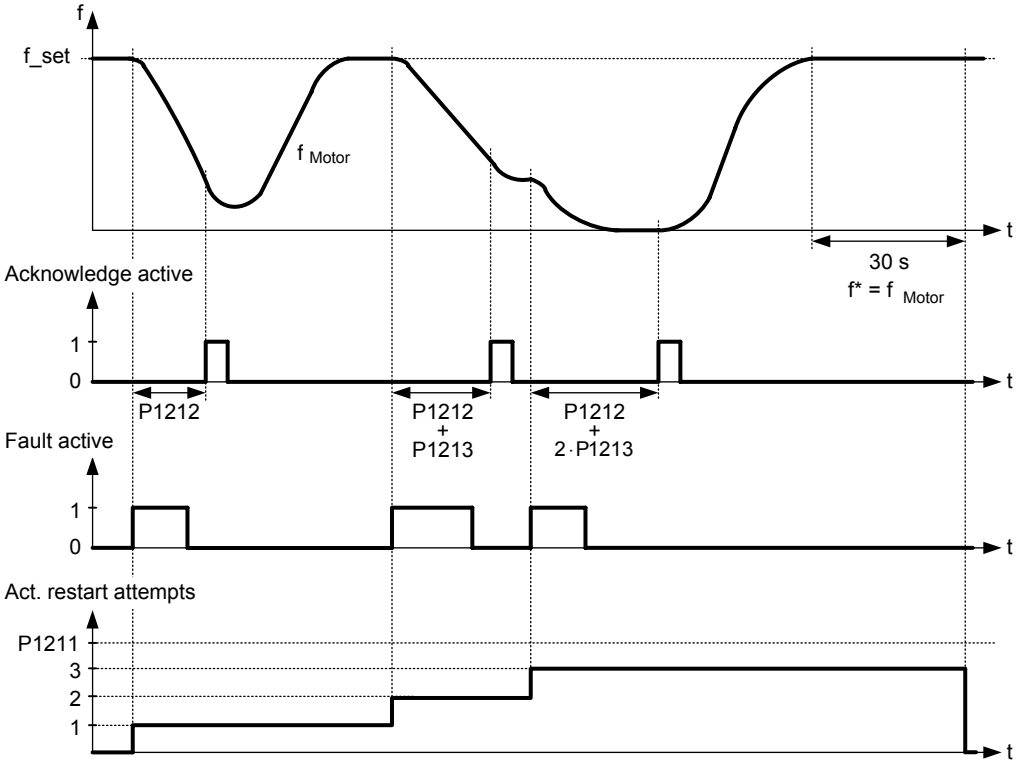

P1213 Restart time increment

CStat:	CUT	**Datatype:** U16	**Unit:** s	**Min:**	0
P-Group:	FUNC	**Active:** first confirm	**QuickComm.:** No	**Def:**	30
				Max:	1000

Level **3**

Selects the amount the restart time is increment for each restart of the inverter if automatic restart P1210 is activated.

3.23 Motor holding brake

P1215	**Holding brake enable**			**Min:** 0	Level
	CStat: T	**Datatype:** U16	**Unit:** -	**Def:** 0	**2**
	P-Group: FUNC	**Active:** first confirm	**QuickComm.:** No	**Max:** 1	

Enables/disables holding brake function.

This function applies the following profile to the inverter:

ON / OFF1/OFF3:

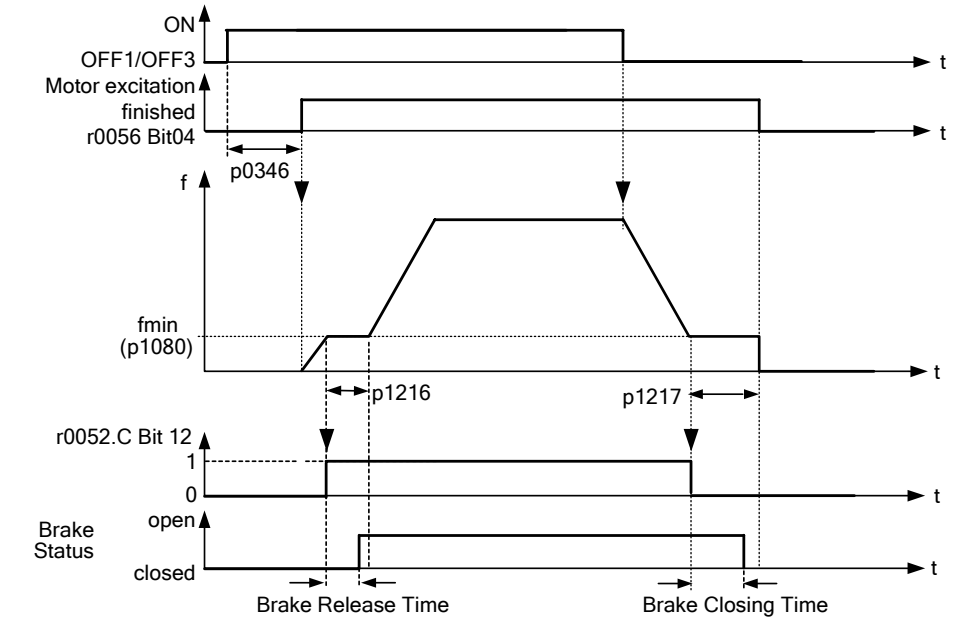

ON / OFF2:

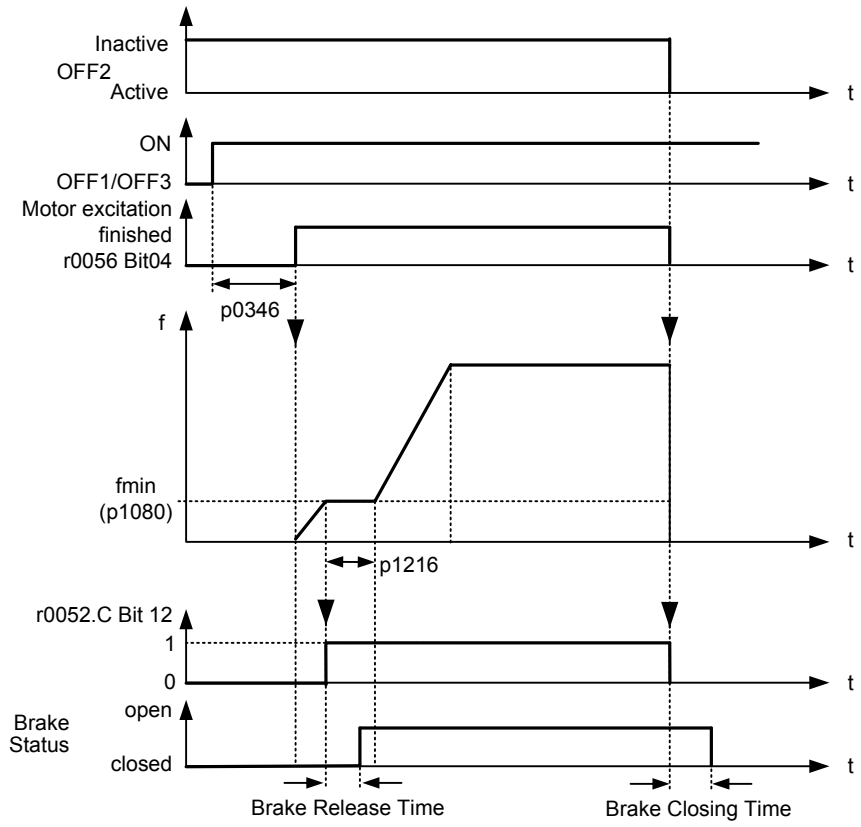

Possible Settings:

0 Motor holding brake disabled
1 Motor holding brake enabled

Caution:

1. To activate the motor holding brake, in addition to parameter P1215 = 1, the status signal r0052 bit 12 "motor holding brake active" must be output via a digital output. The user must also select the signal - e.g. in parameter P0731.

2. If the motor holding brake is controlled by the drive inverter, then for potentially hazardous loads (e.g. suspended/hanging loads for crane applications) the drive inverter may not be conditioned unless the load has been secured. Before commissioning, potentially hazardous loads can be secured as follows:
   - lower the load to the floor, or
   - during commissioning or after replacing the drive inverter, prevent the drive inverter from controlling the motor holding brake. Only then should STARTER be used to carry-out a quick commissioning or a parameter download, etc. The motor holding brake terminals can then be re-used (for the motor holding brake, in this case, it is not permissible to parameterize the system so that the digital output P0748 is inverted).

3. In order to hold the motor against the mechanical brake at a certain frequency, it is important that the min. frequency P1080 approximately corresponds to the slip frequency.
   - If the value is selected to be too high, then the current drawn can be too high so that the drive inverter trips (shuts down) due to an overcurrent condition.
   - For a low value, it is possible that the torque cannot be established to hold the load.

4. It is not permissible to use the motor holding brake as operating brake as generally it is only designed and dimensioned for a limited number of emergency braking operations.

Note:

Parameter settings:
- To open/close, a digital output controls the motor holding brake at point 1/2 (refer to the diagram). In this case, as prerequisite, the motor holding brake P1215 must be activated as well as the motor holding brake selected at the digital output.
- Brake opening time P1216 greater than/equal to the time for the holding brake to open.
- Brake delay time P1217 greater than/equal to the time to close the holding brake.
- Select the minimum frequency P1080 so that it acts like weight equalization.
- A typical value of the minimum frequency P1080 for the motor holding brake is the slip frequency of the motor r0330. The rated slip frequency can be calculated using the following formula:

$$f_{Slip}[Hz] = \frac{r0330}{100} \cdot P0310 = \frac{n_{syn} - n_n}{n_{syn}} \cdot f_n$$

The following closed-loop control parameters should be observed in conjunction with the motor holding brake:
- P1310, P1311, P1333, P1335 for U/f

P1216	**Holding brake release delay**			**Min:** 0.0	Level
	CStat: T	**Datatype:** Float	**Unit:** s	**Def:** 1.0	**2**
	P-Group: FUNC	**Active:** first confirm	**QuickComm.:** No	**Max:** 20.0	

Defines the brake opening time of the motor holding brake (MHB).

When the motor holding brake (P1215) is activated, then the setpoint enable is delayed by the selected time. The time that it takes to open the mechanical brake is subject to certain fluctuations. This is the reason that the drive inverter applies the min. frequency P1080 to the motor during this time. This means that the brake can reliably open before the motor starts.

P1216 ≥ Release time of the brake + relay opening time(s)

Details:

See parameter P1215.

P1217	**Holding time after ramp down**			**Min:** 0.0	Level
	CStat: T	**Datatype:** Float	**Unit:** s	**Def:** 1.0	**2**
	P-Group: FUNC	**Active:** first confirm	**QuickComm.:** No	**Max:** 20.0	

Defines the brake delay time of the motor holding brake (MHB).

When the motor holding brake (P1215) is activated, after an off command, the pulse inhibit is delayed by this selected time. The time that it takes to open the mechanical brake is subject to certain fluctuations. This means that after braking to the min. frequency P1080, the motor is held at the minimum frequency for this time. This means that the brake can reliably close before the motor is switched into a no-current condition.

P1217 ≥ Application time of the brake + relay closing time

Details:

See parameter P1215.

3.24 DC braking

P1230[3]	**BI: Enable DC braking**				**Min:** 0:0	Level
	CStat: CUT	**Datatype:** U32	**Unit:** -		**Def:** 0:0	**3**
	P-Group: COMMANDS	**Active:** first confirm	**QuickComm.:** No		**Max:** 4000:0	

Enables DC braking via a signal applied from an external source. Function remains active while external input signal is active.

DC braking causes the motor to stop rapidly by applying a DC braking current (current applied also holds shaft stationary).

When the DC braking signal is applied, the inverter output pulses are blocked and the DC current is not applied until the motor has been sufficiently demagnetized.

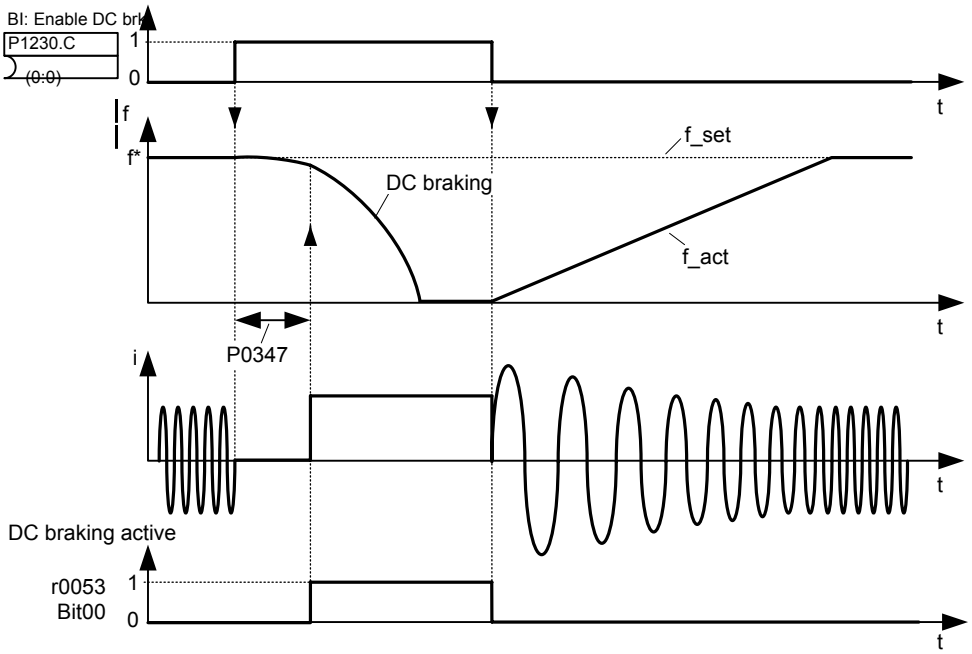

Note: DC brake can be applied in drive states r0002 = 1, 4, 5

The level of DC braking is set in P1232 (DC braking current - relative to the rated motor current) which is set to 100 % by default.

Index:

P1230[0] : 1st. Command data set (CDS)
P1230[1] : 2nd. Command data set (CDS)
P1230[2] : 3rd. Command data set (CDS)

Common Settings:

722.0 = Digital input 1 (requires P0701 to be set to 99, BICO)
722.1 = Digital input 2 (requires P0702 to be set to 99, BICO)
722.2 = Digital input 3 (requires P0703 to be set to 99, BICO)
722.3 = Digital input 4 (requires P0704 to be set to 99, BICO)
722.4 = Digital input 5 (requires P0705 to be set to 99, BICO)
722.5 = Digital input 6 (requires P0706 to be set to 99, BICO)
722.6 = Digital input 7 (via analog input 1, requires P0707 to be set to 99)
722.7 = Digital input 8 (via analog input 2, requires P0708 to be set to 99)

Caution:

With the DC braking, the kinetic energy of the motor is converted into heat in the motor. The drive could overheat if the remains in this status for an exessive period of time !

DC braking is not possible when using a synchronous motor (i.e. P0300 = 2).

Notice:

This delay time is set in P0347 (demagnetization time). If this delay is too short, overcurrent trips can occur.

P1232[3]	**DC braking current**			**Min:** 0	Level
	CStat: CUT	**Datatype:** U16	**Unit:** %	**Def:** 100	**3**
	P-Group: FUNC	**Active:** Immediately	**QuickComm.:** No	**Max:** 250	

Defines level of DC current in [%] relative to rated motor current (P0305).

$$r0027_{DC-Brake}[A] \approx \frac{1}{\sqrt{2}} \cdot P0305 \cdot \frac{P1232}{100\,\%}$$

The current of the DC-braking is limited by r0067.

Index:

P1232[0] : 1st. Drive data set (DDS)
P1232[1] : 2nd. Drive data set (DDS)
P1232[2] : 3rd. Drive data set (DDS)

P1233[3]	**Duration of DC braking**			**Min:** 0	Level
	CStat: CUT	**Datatype:** U16	**Unit:** s	**Def:** 0	**3**
	P-Group: FUNC	**Active:** Immediately	**QuickComm.:** No	**Max:** 250	

Defines duration for which DC injection braking is to be active following an OFF1 or OFF3 command. When an OFF1 or OFF3 command is received by the drive, the output frequency starts to ramp to 0 Hz. When the output frequency reaches the value set in P1234, the drive injects a DC braking current P1232 for the time duration set in P1233.

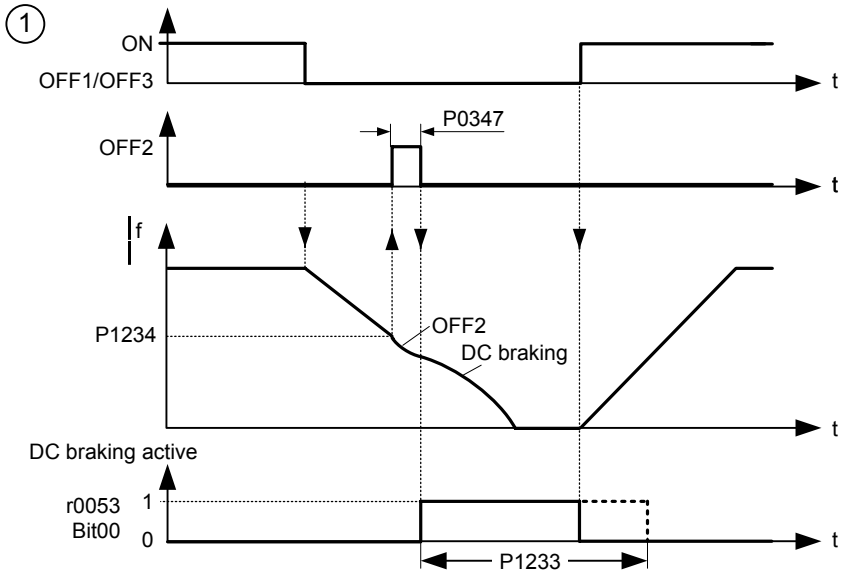

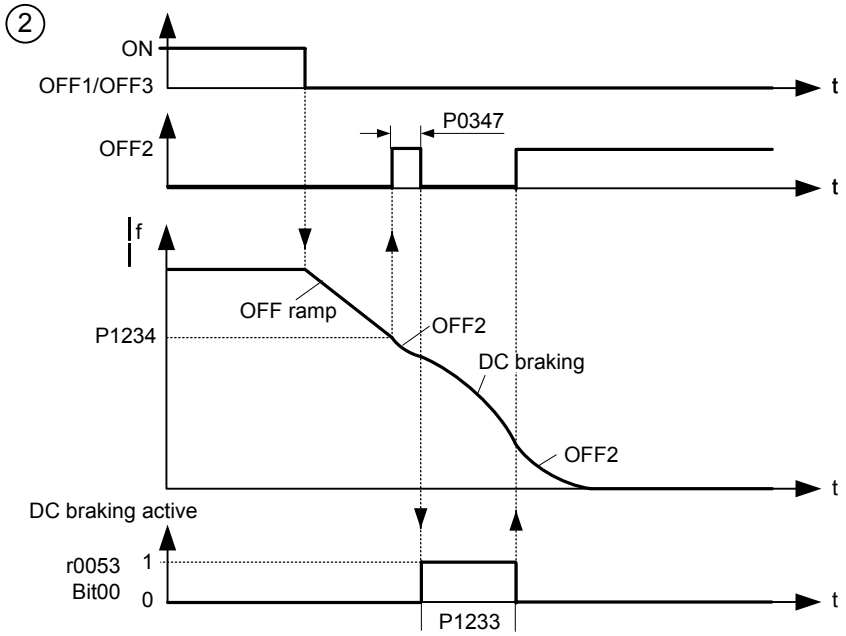

The DC current, that is impressed during time P1233, is specified by parameter P1232.

Index:

P1233[0] : 1st. Drive data set (DDS)
P1233[1] : 2nd. Drive data set (DDS)
P1233[2] : 3rd. Drive data set (DDS)

Value:

P1233 = 0 :
Not active following OFF1 / OFF3.

P1233 = 1 - 250 :
Active for the specified duration.

Caution:

With the DC braking, the kinetic energy of the motor is converted into heat in the motor. The drive could overheat if the remains in this status for an exessive period of time !

DC braking is not possible when using a synchronous motor (i.e. P0300 = 2).

Notice:

The DC braking function causes the motor to stop rapidly by applying a DC braking current (the current applied also holds the shaft stationary). When the DC braking signal is applied, the inverter output pulses are blocked and the DC current not applied until the motor has been sufficiently demagnetized (demagnetization time is calculated automatically from motor data).

The inverter will not restart if an ON-command is given during this period.

P1234[3]	**DC braking start frequency**			**Min:** 0.00	Level
	CStat: CUT	**Datatype:** Float	**Unit:** Hz	**Def:** 650.00	**3**
	P-Group: FUNC	**Active:** Immediately	**QuickComm.:** No	**Max:** 650.00	

Sets start frequency for DC braking.

When an OFF1 or OFF3 command is received by the drive, the output frequency starts to ramp to 0 Hz. When the output frequency reaches the value set in start frequency of DC braking P1234, the drive injects a DC braking current P1232 for the time duration set in P1233.

Index:

P1234[0] : 1st. Drive data set (DDS)
P1234[1] : 2nd. Drive data set (DDS)
P1234[2] : 3rd. Drive data set (DDS)

Details:

See P1232 (DC braking current) and P1233 (duration of DC braking)

3.25 Compound braking

P1236[3]	Compound braking current			Min: 0	Level
	CStat: CUT	Datatype: U16	Unit: %	Def: 0	3
	P-Group: FUNC	Active: Immediately	QuickComm.: No	Max: 250	

Defines DC level superimposed on AC waveform after exeeding DC-link voltage threshold of compound braking. The value is entered in [%] relative to rated motor current (P0305).

If P1254 = 0 :

Compound braking switch-on level $U_{DC\_Comp} = 1.13 \cdot \sqrt{2} \cdot V_{mains} = 1.13 \cdot \sqrt{2} \cdot P0210$

otherwise :

Compound braking switch-on level $U_{DC\_Comp} = 0.98 \cdot r1242$

The Compound Brake is an overlay of the DC brake function with regenerative braking (effective braking at the ramp) after OFF1 or OFF3. This enables braking with controlled motor frequency and a minimum of energy returned to the motor. Through optimization of the ramp-down time and the compound braking an efficient braking without additional HW components is possible.

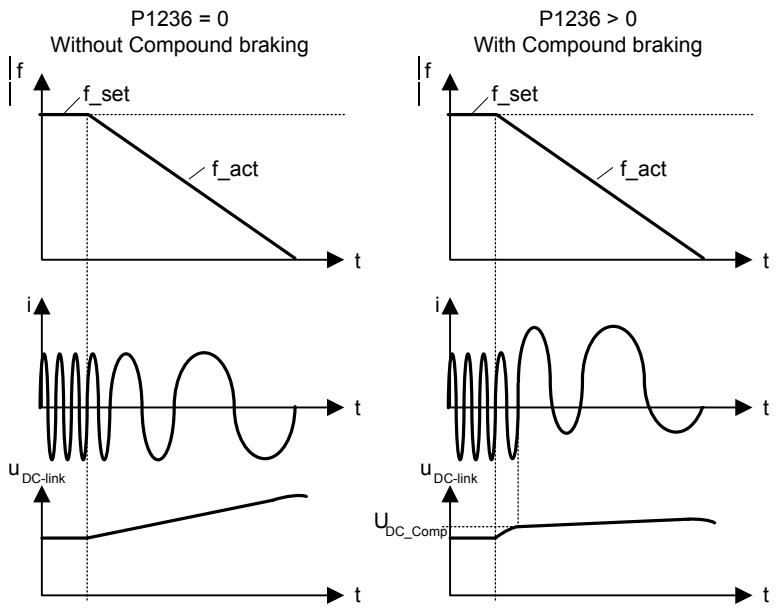

Index:

P1236[0] : 1st. Drive data set (DDS)
P1236[1] : 2nd. Drive data set (DDS)
P1236[2] : 3rd. Drive data set (DDS)

Value:

P1236 = 0 :
Compound braking disabled.

P1236 = 1 - 250 :
Level of DC braking current defined as a [%] of rated motor current (P0305).

Dependency:

Compound braking depends on the DC link voltage only (see threshold above).

It is disabled, when:
- DC braking is active
- Flying start is active

Notice:

Increasing the value will generally improve braking performance; however, if you set the value too high, an overcurrent trip may result.

If used with dynamic braking enabled as well compound braking will take priority.

If used with the Vdc max controller enabled the drive behaviour whilst braking may be worsened paticularly with high values of compound braking.

3.26 Vdc controller

P1240[3]	**Configuration of Vdc controller**			**Min:** 0	Level
	CStat: CT	**Datatype:** U16	**Unit:** -	**Def:** 1	**3**
	P-Group: FUNC	**Active:** Immediately	**QuickComm.:** No	**Max:** 1	

Enables / disables Vdc controller.

The Vdc controller dynamically controls the DC link voltage to prevent overvoltage trips on high inertia systems.

Possible Settings:

0 Vdc controller disabled
1 Vdc-max controller enabled

Index:

P1240[0] : 1st. Drive data set (DDS)
P1240[1] : 2nd. Drive data set (DDS)
P1240[2] : 3rd. Drive data set (DDS)

Note:

Vdc max controller automatically increases ramp-down times to keep the DC-link voltage (r0026) within limits (r1242).

r1242	**CO: Switch-on level of Vdc-max**			**Min:** -	Level
		Datatype: Float	**Unit:** V	**Def:** -	**3**
	P-Group: FUNC			**Max:** -	

Displays switch-on level of Vdc max controller.

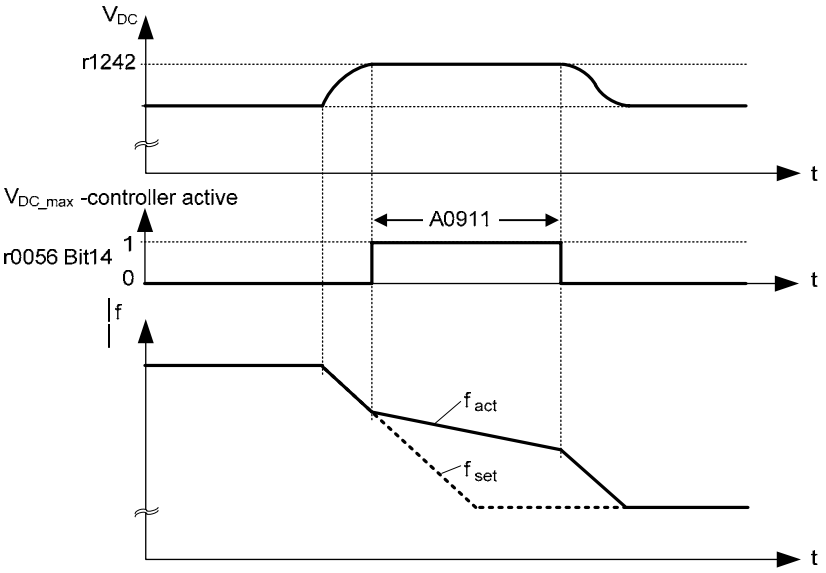

Following equation is only valid, if P1254 = 0 :

$$r1242 = 1.15 \cdot \sqrt{2} \cdot V_{mains} = 1.15 \cdot \sqrt{2} \cdot P0210$$

otherwise :

r1242 is internally calculated

Note:

Parameter r1242 (switch-in threshold) is determined by each power cycle, when precharging of the DC-link is finished.

P1243[3]	**Dynamic factor of Vdc-max**			**Min:** 10	Level
	CStat: CUT	**Datatype:** U16	**Unit:** %	**Def:** 100	**3**
	P-Group: FUNC	**Active:** Immediately	**QuickComm.:** No	**Max:** 200	

Defines dynamic factor for DC link controller in [%].

Index:

P1243[0] : 1st. Drive data set (DDS)
P1243[1] : 2nd. Drive data set (DDS)
P1243[2] : 3rd. Drive data set (DDS)

Note:

Vdc controller adjustment is calculated automatically from motor and inverter data.

P1253[3]	**Vdc-controller output limitation**			**Min:** 0.00	Level
	CStat: CUT	**Datatype:** Float	**Unit:** Hz	**Def:** 10.00	**3**
	P-Group: FUNC	**Active:** Immediately	**QuickComm.:** No	**Max:** 600.00	

Limits maximum effect of Vdc max controller.

Index:

P1253[0] : 1st. Drive data set (DDS)
P1253[1] : 2nd. Drive data set (DDS)
P1253[2] : 3rd. Drive data set (DDS)

P1254	**Auto detect Vdc switch-on levels**			**Min:** 0	Level
	CStat: CT	**Datatype:** U16	**Unit:** -	**Def:** 1	**3**
	P-Group: FUNC	**Active:** Immediately	**QuickComm.:** No	**Max:** 1	

Enables/disables auto-detection of switch-on levels for Vdc control functionalities.

Following switch-on levels are calculated

- Switch-on level compound brake
- Switch-on level Vdc_max controller r1242

Possible Settings:

0 Disabled
1 Enabled

Note:

The switch-on thresholds are only calculated during the start-up of the inverter after connection to the mains. An online-adaption is not performed during operation. This means that modification of P1254 does not immediately take effect and variations in the mains are also not initially taken into account.

P1254 = 0 (Automatic Detection disabled):
The above thresholds are calculated via P0210, if automatic detection is disabled.

3.27 Bypass

P1260[3]	Bypass control				Min: 0	Level
	CStat: CT	Datatype: U16	Unit: -		Def: 0	2
	P-Group: FUNC	Active: first confirm	QuickComm.: No		Max: 7	

Selects the possible sources for contactor changeover control.

Possible Settings:

0 Bypass disabled
1 Controlled by inverter trip
2 Controlled by P1266
3 Controlled by P1266 or inverter trip
4 Controlled by act. frequency = P1265
5 Controlled by act. frequency = P1265 or inverter trip
6 Controlled by act. frequency = P1265 or P1266
7 Controlled by act. frequency = P1265 or P1266 or inverter trip

Index:

P1260[0] : 1st. Drive data set (DDS)
P1260[1] : 2nd. Drive data set (DDS)
P1260[2] : 3rd. Drive data set (DDS)

Dependency:

Bypass is used to described the condition when a motor is ran alternatively between a mains supply and the inverter.

For example, the bypass circuit can be used to switch over from the inverter to a mains supply when the inverter is faulty. This function can also be used to ramp-up a large rotation mass using the inverter and then, at the correct speed, switching over to the mains supply.

An example of a bypass circuit is given in the following diagram:

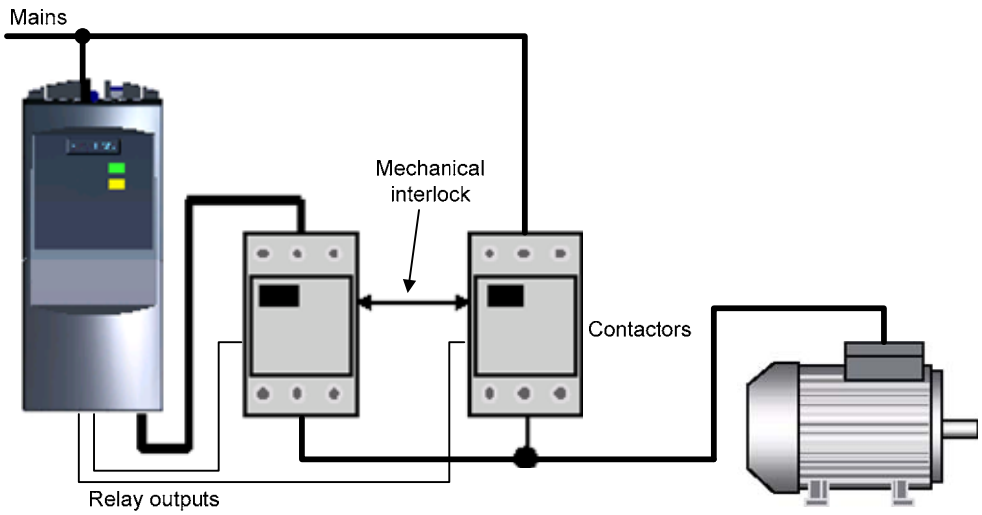

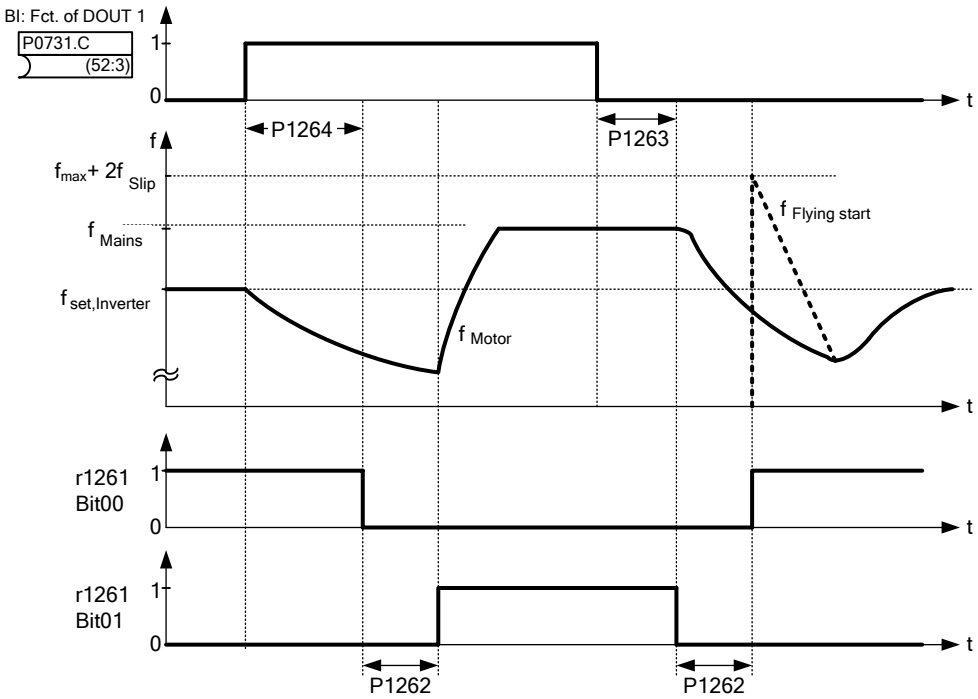

Note:

- Flying start P1200 should be enabled in cases where the motor may still be turning after switch-over from bypass-mode to inverter-mode.
- The Bypass does not work with the function "Controlled by act. frequency = P1265", if the setpoint source P1000 is set to analog setpoint (analog input).

r1261	**BO: Bypass status word**			**Min:**	-	Level
		Datatype: U16	**Unit:** -	**Def:**	-	**2**
	P-Group: FUNC			**Max:**	-	

Output word from the bypass feature that allows external connections to be made.

Bitfields:

Bit00	Motor supplied by inverter	0	NO	1	YES
Bit01	Motor supplied by mains	0	NO	1	YES

P1262[3]	**Bypass dead time**			**Min:**	0	Level
	CStat: CUT	**Datatype:** Float	**Unit:** s	**Def:**	1.000	**2**
	P-Group: FUNC	**Active:** first confirm	**QuickComm.:** No	**Max:**	20.000	

P1262 is the interlock time between switching one contator OFF, and the other ON. Its minimum value should not be smaller than the motor demagnetisation time P0347.

Index:

P1262[0] : 1st. Drive data set (DDS)
P1262[1] : 2nd. Drive data set (DDS)
P1262[2] : 3rd. Drive data set (DDS)

P1263[3]	**De-Bypass time**			**Min:**	0	Level
	CStat: CUT	**Datatype:** Float	**Unit:** s	**Def:**	1.0	**2**
	P-Group: FUNC	**Active:** first confirm	**QuickComm.:** No	**Max:**	300.0	

This delay timer is used as a delay for all sources of switchover from bypass to inverter control.

If the condition for switching from bypass is removed then this timer is reset, and must run through again before bypass will occur.

Index:

P1263[0] : 1st. Drive data set (DDS)
P1263[1] : 2nd. Drive data set (DDS)
P1263[2] : 3rd. Drive data set (DDS)

P1264[3]	**Bypass time**			**Min:** 0	Level
	CStat: CUT	**Datatype:** Float	**Unit:** s	**Def:** 1.0	**2**
	P-Group: FUNC	**Active:** first confirm	**QuickComm.:** No	**Max:** 300.0	

This delay timer is used as a delay for all sources of switchover from inverter control to bypass.

If the condition for switching to bypass is removed then this timer is reset, and must run through again before bypass will occur.

Index:

P1264[0] : 1st. Drive data set (DDS)
P1264[1] : 2nd. Drive data set (DDS)
P1264[2] : 3rd. Drive data set (DDS)

P1265[3]	**Bypass frequency**			**Min:** 12.00	Level
	CStat: CT	**Datatype:** Float	**Unit:** Hz	**Def:** 50.00	**2**
	P-Group: FUNC	**Active:** first confirm	**QuickComm.:** No	**Max:** 650.00	

Bypass frequency.

Index:

P1265[0] : 1st. Drive data set (DDS)
P1265[1] : 2nd. Drive data set (DDS)
P1265[2] : 3rd. Drive data set (DDS)

Note:

The decision to change from inverter to mains control requires that RFG output (P1170) is within 0.01 Hz of the bypass frequency (P1265). If the diference between the drive output frequency and the bypass frequency is outside this limit then the motor will remain under inverter control.

It is therefore recommended that either the inverter setpoint, or the maximum output frequency (P1082), is set to the same value as the bypass frequency (P2165) to make sure that the above condition is met.

Additionally because of this restriction note that it is not possible to employ bypass control when using an analog setpoint.

P1266[3]	**BI: Bypass command**			**Min:** 0:0	Level
	CStat: CT	**Datatype:** U32	**Unit:** -	**Def:** 0:0	**2**
	P-Group: FUNC	**Active:** first confirm	**QuickComm.:** No	**Max:** 4000:0	

Bypass Control P1260 can be controlled by an external switch which is connected to the inverter. The P1266 BI: Bypass command selects the interface (e.g. DIN, USS or CB) from which the signal originates.

Index:

P1266[0] : 1st. Command data set (CDS)
P1266[1] : 2nd. Command data set (CDS)
P1266[2] : 3rd. Command data set (CDS)

Common Settings:

722.0 = Digital input 1 (requires P0701 to be set to 99, BICO)
722.1 = Digital input 2 (requires P0702 to be set to 99, BICO)
722.2 = Digital input 3 (requires P0703 to be set to 99, BICO)
722.3 = Digital input 4 (requires P0704 to be set to 99, BICO)
722.4 = Digital input 5 (requires P0705 to be set to 99, BICO)
722.5 = Digital input 6 (requires P0706 to be set to 99, BICO)
722.6 = Digital input 7 (via analog input 1, requires P0707 to be set to 99)
722.7 = Digital input 8 (via analog input 2, requires P0708 to be set to 99)

3.28 Control mode

P1300[3]	Control mode				Min: 0	Level
	CStat: CT	Datatype: U16	Unit: -		Def: 1	3
	P-Group: CONTROL	Active: first confirm	QuickComm.: Yes		Max: 23	

Controls relationship between speed of motor and voltage supplied by inverter as illustrated in the diagram below.

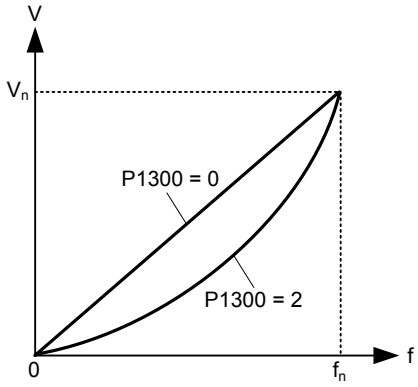

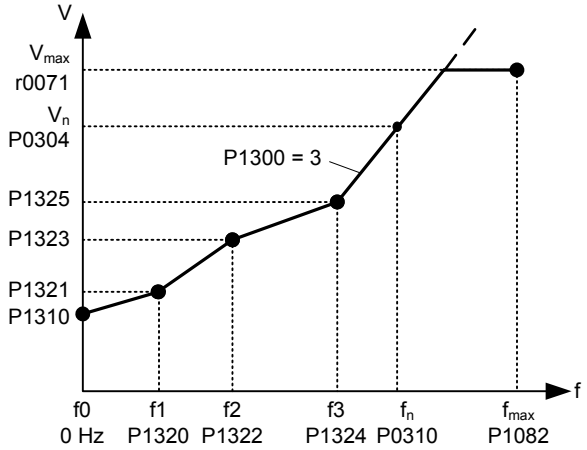

Possible Settings:

0 V/f with linear characteristic
1 V/f with FCC
2 V/f with parabolic characteristic
3 V/f with programmable characteristic
4 Reserved
5 V/f for textile applications
6 V/f with FCC for textile applications
19 V/f control with independent voltage setpoint
20 Reserved
21 Reserved
22 Reserved
23 Reserved

Index:

P1300[0] : 1st. Drive data set (DDS)
P1300[1] : 2nd. Drive data set (DDS)
P1300[2] : 3rd. Drive data set (DDS)

Dependency:

See parameter P0205, P0500

Note:

P1300 = 1 : V/f with FCC (flux current control)
- Maintains motor flux current for improved efficiency.
- If FCC is chosen, linear V/f is active at low frequencies.

P1300 = 2 : V/f with a quadratic characteristic
- Suitable for centrifugal fans / pumps

P1300 = 3 : V/f with a programmable characteristic
- User defined characteristic (see P1320)
- For synchronous motors (e.g. SIEMOSYN motors)

P1300 = 5,6 : V/f for textil applications
- Slip compensation disabled.
- Imax controller modifies the output voltage only.
- Imax controller does not influence the output frequency.

P1300 = 19 : V/f control with independent voltage setpoint

The following table presents an overview of control parameters (V/f) that can be modify in relationship to P1300 dependencies:

Par No.	Parameter name	Level	V/f						
			P1300 =						
			0	1	2	3	5	6	19
P1300[3]	Control mode	2	x	x	x	x	x	x	x
P1310[3]	Continuous boost	2	x	x	x	x	x	x	x
P1311[3]	Acceleration boost	2	x	x	x	x	x	x	x
P1312[3]	Starting boost	2	x	x	x	x	x	x	x
P1316[3]	Boost end frequency	3	x	x	x	x	x	x	x
P1320[3]	Programmable V/f freq. coord. 1	3	–	–	–	x	–	–	–
P1321[3]	Programmable V/f volt. coord. 1	3	–	–	–	x	–	–	–
P1322[3]	Programmable V/f freq. coord. 2	3	–	–	–	x	–	–	–
P1323[3]	Programmable V/f volt. coord. 2	3	–	–	–	x	–	–	–
P1324[3]	Programmable V/f freq. coord. 3	3	–	–	–	x	–	–	–
P1325[3]	Programmable V/f volt. coord. 3	3	–	–	–	x	–	–	–
P1330[3]	CI: Voltage setpoint	3	–	–	–	–	–	–	x
P1333[3]	Start frequency for FCC	3	–	x	–	–	–	x	–
P1335[3]	Slip compensation	2	x	x	x	x	–	–	–
P1336[3]	CO: U/f Slip limit	2	x	x	x	x	–	–	–
P1338[3]	Resonance damping gain V/f	3	x	x	x	x	–	–	–
P1340[3]	Imax freq. controller prop. gain	3	x	x	x	x	x	x	x
P1341[3]	Imax controller integral time	3	x	x	x	x	x	x	x
P1345[3]	Imax controller prop. gain	3	x	x	x	x	x	x	x
P1346[3]	Imax voltage ctrl. integral time	3	x	x	x	x	x	x	x
P1350[3]	Voltage soft start	3	x	x	x	x	x	x	x

3.29 V/f control parameters

P1310[3]	**Continuous boost**				**Min:** 0.0	Level
	CStat: CUT	**Datatype:** Float	**Unit:** %		**Def:** 50.0	**3**
	P-Group: CONTROL	**Active:** Immediately	**QuickComm.:** No		**Max:** 250.0	

At low output frequencies the output voltage is low to keep the flux level constant. However, the output voltage may be too low

- for magnetisation the asynchronous motor
- to hold the load
- to overcome losses in the system. The output voltage can be increased using parameter P1310.

Defines boost level in [%] relative to P0305 (rated motor current) applicable to both linear and quadratic V/f curves according to the diagram below:

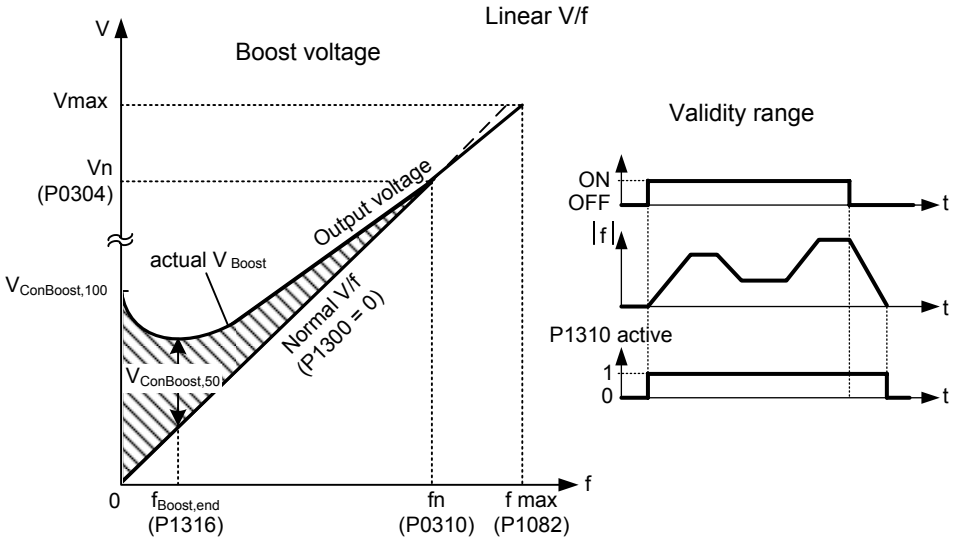

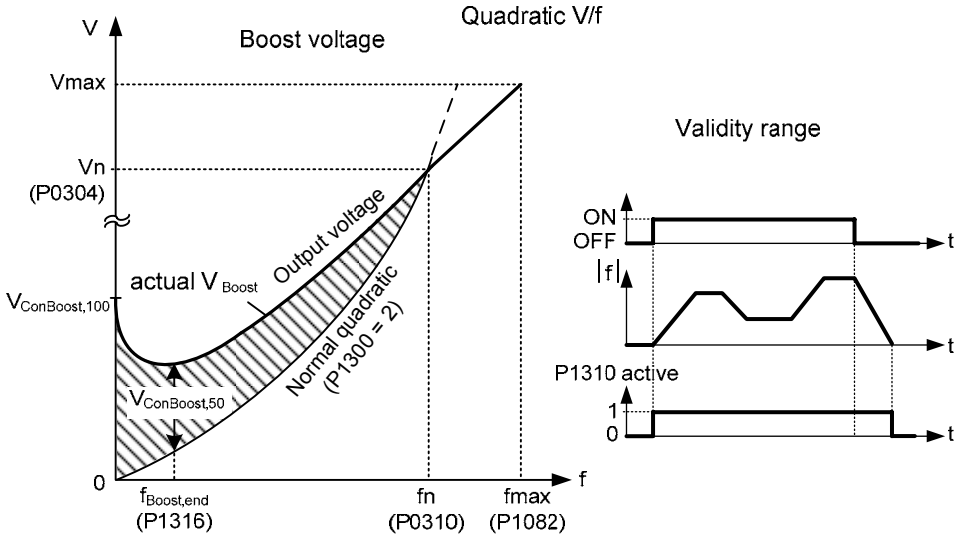

where voltage values are given

$$V_{ConBoost,100} = P0305 \cdot P0350 \cdot \frac{P1310}{100}$$

$$V_{ConBoost,50} = \frac{V_{ConBoost,100}}{2}$$

Index:

P1310[0] : 1st. Drive data set (DDS)
P1310[1] : 2nd. Drive data set (DDS)
P1310[2] : 3rd. Drive data set (DDS)

Note:

- Increasing the boost levels increases motor heating (especially at standstill).
- The boost values are combined when continuous boost (P1310) used in conjunction with other boost parameters (acceleration boost P1311 and starting boost P1312).
- However priorities are allocated to these parameters as follows:
  P1310 > P1311 > P1312

- The total boost is limited by following equation:

  $$\sum V_{Boost} \le 3 \cdot R_s \cdot I_{Mot} = 3 \cdot P0305 \cdot P0350$$

- Setting in P0640 (motor overload factor [%]) limits the boost:

  $$\frac{\sum V_{Boost}}{P0305 \cdot P0350} \le \frac{P0640}{100}$$

P1311[3]	**Acceleration boost**				**Min:** 0.0	Level
	CStat: CUT	**Datatype:** Float	**Unit:** %		**Def:** 0.0	**3**
	P-Group: CONTROL	**Active:** Immediately	**QuickComm.:** No		**Max:** 250.0	

P1311 will only produce boost during ramping, and is therefore useful for additional torque during acceleration and deceleration.

Applies boost in [%] relative to P0305 (rated motor current) following a positive setpoint change and drops back out once the setpoint is reached.

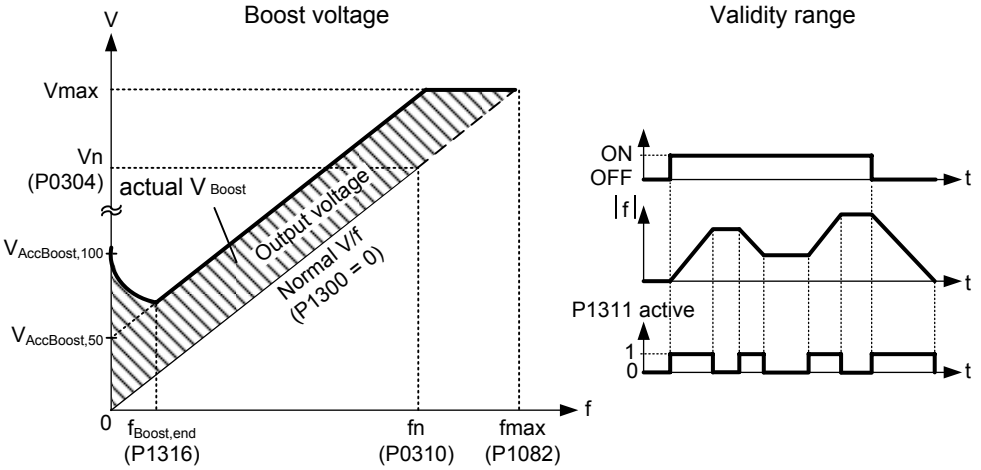

where voltage values are given

$$V_{AccBoost,100} = P0305 \cdot P0350 \cdot \frac{P1311}{100}$$

$$V_{AccBoost,50} = \frac{V_{AccBoost,100}}{2}$$

Index:

P1311[0] : 1st. Drive data set (DDS)
P1311[1] : 2nd. Drive data set (DDS)
P1311[2] : 3rd. Drive data set (DDS)

Note:

See parameter P1310

P1312[3]	**Starting boost**				**Min:** 0.0	Level
	CStat: CUT	**Datatype:** Float	**Unit:** %		**Def:** 0.0	**3**
	P-Group: CONTROL	**Active:** Immediately	**QuickComm.:** No		**Max:** 250.0	

Applies a constant linear offset (in [%] relative to P0305 (rated motor current)) to active V/f curve (either linear or quadratic) after an ON command and is active until
1) ramp output reaches setpoint for the first time respectively
2) setpoint is reduced to less than present ramp output

This is useful for starting loads with high inertia.

Setting the starting boost (P1312) too high will cause the inverter to limit the current, which will in turn restrict the output frequency to below the setpoint frequency.

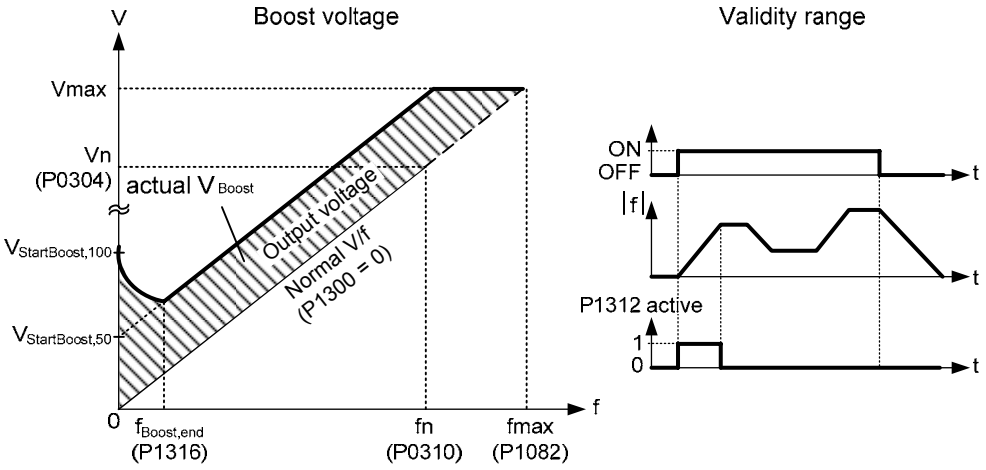

where voltage values are given

$$V_{StartBoost,100} = P0305 \cdot P0350 \cdot \frac{P1312}{100}$$

$$V_{StartBoost,50} = \frac{V_{StartBoost,100}}{2}$$

Index:

P1312[0] : 1st. Drive data set (DDS)
P1312[1] : 2nd. Drive data set (DDS)
P1312[2] : 3rd. Drive data set (DDS)

Example:

Setpoint = 50Hz. Ramping up with starting boost. During ramp up, setpoint changed to 20Hz. As soon as setpoint changed, starting boost removed because setpoint smaller than present ramp output.

Note:

See parameter P1310

P1316[3]	**Boost end frequency**				**Min:** 0.0	Level
	CStat: CUT	**Datatype:** Float	**Unit:** %		**Def:** 20.0	**3**
	P-Group: CONTROL	**Active:** Immediately	**QuickComm.:** No		**Max:** 100.0	

Defines point at which programmed boost reaches 50 % of its value. This value is expressed in [%] relative to P0310 (rated motor frequency).

The default frequency is defined as follows:

$$f_{Boost\,min} = 2 \cdot \left(\frac{153}{\sqrt{P_{motor}}} + 3\right)$$

Index:

P1316[0] : 1st. Drive data set (DDS)
P1316[1] : 2nd. Drive data set (DDS)
P1316[2] : 3rd. Drive data set (DDS)

Note:

- The expert user may change this value to alter the shape of the curve, e.g. to increase torque at a particular frequency.
- Default value is depending on inverter type and its rating data.

Details:

See diagram in P1310 (continuous boost).

P1320[3]	**Programmable V/f freq. coord. 1**			**Min:** 0.00	Level
	CStat: CT	**Datatype:** Float	**Unit:** Hz	**Def:** 0.00	**3**
	P-Group: CONTROL	**Active:** Immediately	**QuickComm.:** No	**Max:** 650.00	

Sets V/f coordinates (P1320/1321 to P1324/1325) to define V/f characteristic.

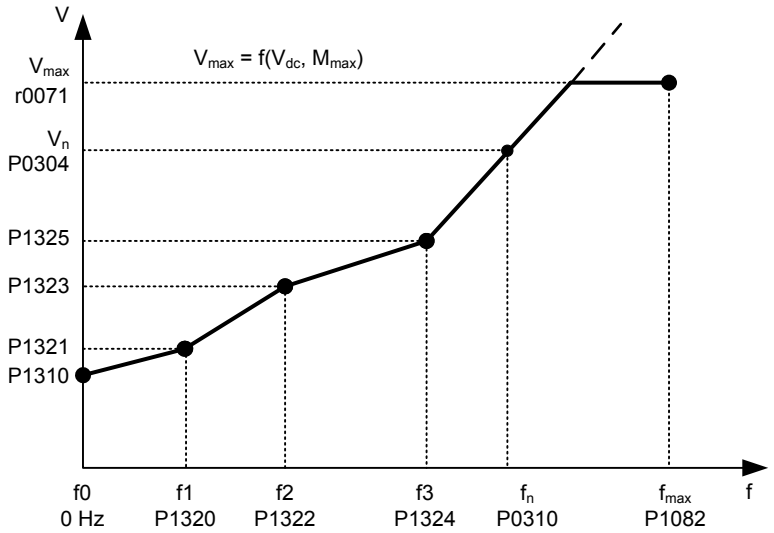

$$P1310[V] = \frac{P1310[\%]}{100[\%]} \cdot \frac{r0395[\%]}{100[\%]} \cdot P0304[V]$$

Index:

P1320[0] : 1st. Drive data set (DDS)
P1320[1] : 2nd. Drive data set (DDS)
P1320[2] : 3rd. Drive data set (DDS)

Example:

This parameter can be used to provide correct torque at correct frequency and is useful when used with synchronous motors.

Dependency:

To set parameter, select P1300 = 3 (V/f with programmable characteristic).

Note:

Linear interpolation will be applied between the individual data points.

V/f with programmable characteristic (P1300 = 3) has 3 programmable points. The two non-programmable points are:

- Continuous boost P1310 at zero 0 Hz
- Rated motor voltage P0304 at rated motor frequency P0310

The acceleration boost and starting boost defined in P1311 and P1312 are applied to V/f with programmable characteristic.

P1321[3]	**Programmable V/f volt. coord. 1**			**Min:** 0.0	Level
	CStat: CUT	**Datatype:** Float	**Unit:** V	**Def:** 0.0	**3**
	P-Group: CONTROL	**Active:** Immediately	**QuickComm.:** No	**Max:** 3000.0	

See P1320 (programmable V/f freq. coord. 1).

Index:

P1321[0] : 1st. Drive data set (DDS)
P1321[1] : 2nd. Drive data set (DDS)
P1321[2] : 3rd. Drive data set (DDS)

P1322[3]	**Programmable V/f freq. coord. 2**			**Min:** 0.00	Level
	CStat: CT	**Datatype:** Float	**Unit:** Hz	**Def:** 0.00	**3**
	P-Group: CONTROL	**Active:** Immediately	**QuickComm.:** No	**Max:** 650.00	

See P1320 (programmable V/f freq. coord. 1).

Index:

P1322[0] : 1st. Drive data set (DDS)
P1322[1] : 2nd. Drive data set (DDS)
P1322[2] : 3rd. Drive data set (DDS)

P1323[3]	**Programmable V/f volt. coord. 2**			**Min:** 0.0	Level
	CStat: CUT	**Datatype:** Float	**Unit:** V	**Def:** 0.0	**3**
	P-Group: CONTROL	**Active:** Immediately	**QuickComm.:** No	**Max:** 3000.0	

See P1320 (programmable V/f freq. coord. 1).

Index:

P1323[0] : 1st. Drive data set (DDS)
P1323[1] : 2nd. Drive data set (DDS)
P1323[2] : 3rd. Drive data set (DDS)

P1324[3]	**Programmable V/f freq. coord. 3**			**Min:** 0.00	Level
	CStat: CT	**Datatype:** Float	**Unit:** Hz	**Def:** 0.00	**3**
	P-Group: CONTROL	**Active:** Immediately	**QuickComm.:** No	**Max:** 650.00	

See P1320 (programmable V/f freq. coord. 1).

Index:

P1324[0] : 1st. Drive data set (DDS)
P1324[1] : 2nd. Drive data set (DDS)
P1324[2] : 3rd. Drive data set (DDS)

P1325[3]	**Programmable V/f volt. coord. 3**			**Min:** 0.0	Level
	CStat: CUT	**Datatype:** Float	**Unit:** V	**Def:** 0.0	**3**
	P-Group: CONTROL	**Active:** Immediately	**QuickComm.:** No	**Max:** 3000.0	

See P1320 (programmable V/f freq. coord. 1).

Index:

P1325[0] : 1st. Drive data set (DDS)
P1325[1] : 2nd. Drive data set (DDS)
P1325[2] : 3rd. Drive data set (DDS)

P1330[3]	**CI: Voltage setpoint**			**Min:** 0:0	Level
	CStat: T	**Datatype:** U32	**Unit:** -	**Def:** 0:0	**3**
	P-Group: CONTROL	**Active:** first confirm	**QuickComm.:** No	**Max:** 4000:0	

BICO parameter for selecting source of voltage setpoint for independent V/f control.

Index:

P1330[0] : 1st. Command data set (CDS)
P1330[1] : 2nd. Command data set (CDS)
P1330[2] : 3rd. Command data set (CDS)

P1333[3]	**Start frequency for FCC**			**Min:** 0.0	Level
	CStat: CUT	**Datatype:** Float	**Unit:** %	**Def:** 10.0	**3**
	P-Group: CONTROL	**Active:** Immediately	**QuickComm.:** No	**Max:** 100.0	

Defines the FCC starting frequency as a percentage of the rated motor frequency (P0310).

When FCC is activated using P1300 = 1, then as a function of the FCC starting frequency plus hysteresis and the actual frequency, a changeover is made with a continuous transition between the linear V/f characteristic (P1300 = 0) and FCC (refer to the diagram).

$$f_{FCC} = \frac{P0310}{100} \cdot P1333$$

$$f_{FCC+Hys} = \frac{P0310}{100} \cdot (P1333 + 6\%)$$

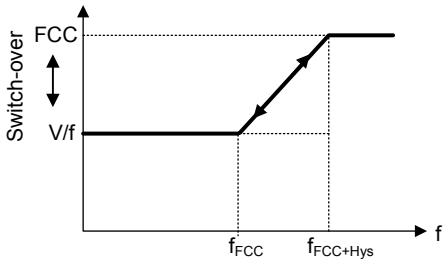

Index:

P1333[0] : 1st. Drive data set (DDS)
P1333[1] : 2nd. Drive data set (DDS)
P1333[2] : 3rd. Drive data set (DDS)

Notice:

- A value that is excessively low can result in instability.
- The constant voltage boost P1310 is continuously de-activated - essentially the same as when switching-in FCC.
- Contrary, the voltage boosts P1311 and P1312 remain active over the complete frequency range.

3.29.1 Slip compensation

P1335[3]	Slip compensation				Min: 0.0	Level
	CStat: CUT	Datatype: Float	Unit: %		Def: 0.0	3
	P-Group: CONTROL	Active: Immediately	QuickComm.: No		Max: 600.0	

Dynamically adjusts output frequency of inverter so that motor speed is kept constant independent of motor load.

In the V/f-control, the motor speed will always be less than the command speed due to the slip speed. For a given speed command, the speed will drop as load is increased. The speed regulation of drive can be improved by the technique known as slip compensation.

Increasing the load from M1 to M2 (see diagram) will decrease the motor speed from f1 to f2, due to the slip. The inverter can compensate for this by increasing the output frequency slightly as the load increases. The inverter measures the current and increases the output frequency to compensate for the expected slip.

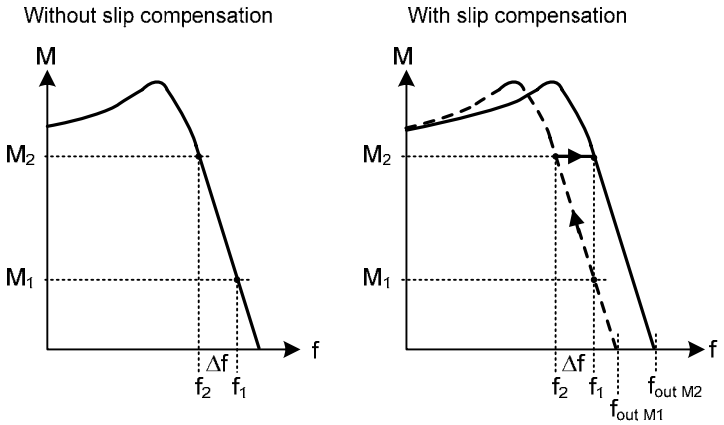

Index:

P1335[0] : 1st. Drive data set (DDS)
P1335[1] : 2nd. Drive data set (DDS)
P1335[2] : 3rd. Drive data set (DDS)

Value:

P1335 = 0 % :
Slip compensation disabled.

P1335 = 50 % - 70 % :
Full slip compensation at cold motor (partial load).

P1335 = 100 % :
Full slip compensation at warm motor (full load).

Range of slip compensation :

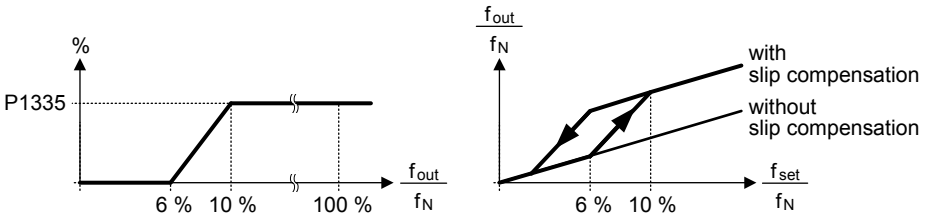

Notice:

The applied value of the slip compensation (scaled by P1335) is limited by following equation:

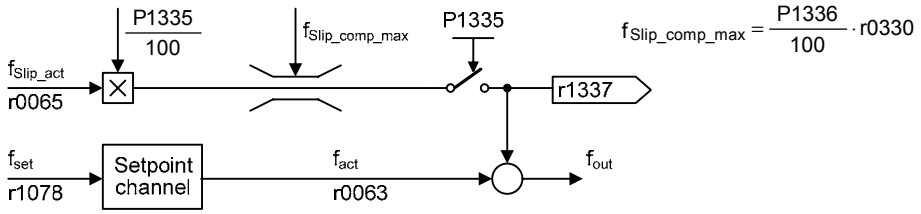

P1336[3]	Slip limit				Min: 0	Level
	CStat: CUT	Datatype: U16	Unit: %		Def: 250	3
	P-Group: CONTROL	Active: Immediately	QuickComm.: No		Max: 600	

Compensation slip limit in [%] relative to r0330 (rated motor slip), which is added to frequency setpoint.

Index:

P1336[0] : 1st. Drive data set (DDS)
P1336[1] : 2nd. Drive data set (DDS)
P1336[2] : 3rd. Drive data set (DDS)

Dependency:

Slip compensation (P1335) active.

r1337	CO: V/f slip frequency			Min: -	Level
		Datatype: Float	Unit: %	Def: -	3
	P-Group: CONTROL			Max: -	

Displays actual compensated motor slip as [%]

Dependency:

Slip compensation (P1335) active.

3.29.2 Resonance damping

P1338[3]	Resonance damping gain V/f			Min: 0.00	Level
	CStat: CUT	Datatype: Float	Unit: -	Def: 0.00	3
	P-Group: CONTROL	Active: Immediately	QuickComm.: No	Max: 10.00	

Defines resonance damping gain for V/f. Here, di/dt of the acitve current will be scaled by P1338 (see diagram below). If di/dt increases the resonance damping circuit decreases the inverter output frequency.

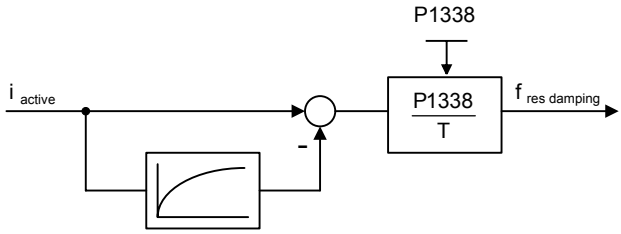

Index:

P1338[0] : 1st. Drive data set (DDS)
P1338[1] : 2nd. Drive data set (DDS)
P1338[2] : 3rd. Drive data set (DDS)

Note:

- The resonance damping function is used to dampen oscillations in the active current. These especially occur when rotating field motors are operating under no-load conditions. The parameter is not used to optimize the stabilizing behavior.
- In the V/f control modes (refer to P1300), the resonance damping controller is activate in a range from approximately 5 % up to 70 % of the rated motor frequency (P0310).
- An excessively high value results in instability (positive feedback).

3.29.3 Imax controller

P1340[3]	**Imax freq. controller prop. gain**			**Min:** 0.000	Level
	CStat: CUT	**Datatype:** Float	**Unit:** -	**Def:** 0.000	**3**
	P-Group: CONTROL	**Active:** Immediately	**QuickComm.:** No	**Max:** 0.499	

Proportional gain of the I_max frequency controller.

The Imax controller reduces inverter current if the output current exceeds the maximum motor current (r0067).

In linear V/f, parabolic V/f, FCC, and programmable V/f modes the I_max controller uses both a frequency controller (see parameters P1340 and P1341) and a voltage controller (see parameters P1345 and P1346). The frequency controller seeks to reduce current by limiting the inverter output frequency (to a minimum of the two times nominal slip frequency). If this action does not successfully remove the overcurrent condition, the inverter output voltage is reduced using the I_max voltage controller. When the overcurrent condition has been removed successfully, frequency limiting is removed using the ramp-up time set in P1120.

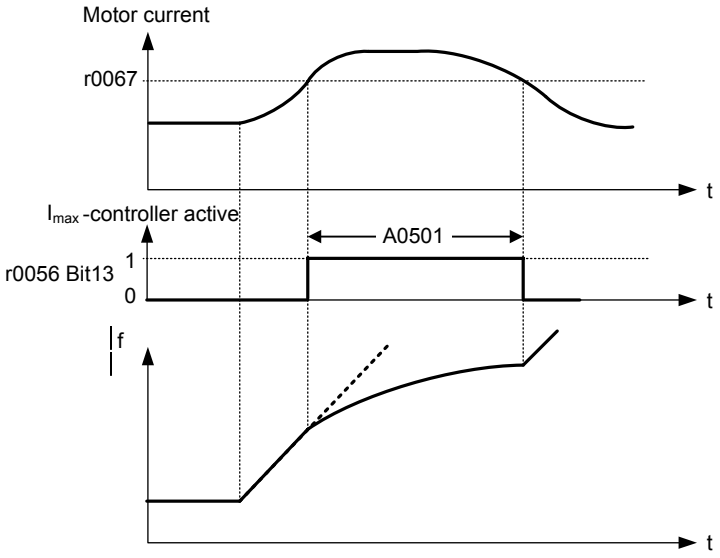

In linear V/f for textiles, FCC for textiles, or external V/f modes only the I_max voltage controller is used to reduce current (See parameters P1345 and P1346).

Index:

P1340[0] : 1st. Drive data set (DDS)
P1340[1] : 2nd. Drive data set (DDS)
P1340[2] : 3rd. Drive data set (DDS)

Note:

The I_max controller can be disabled by setting the frequency controller integral time P1341 to zero. This disables both the frequency and voltage controllers. Note that when disabled, the I_max controller will take no action to reduce current but overcurrent warnings will still be generated, and the Drive will trip in excessive overcurrent or overload conditions.

P1341[3]	**Imax freq. ctrl. integral time**			**Min:** 0.000	Level
	CStat: CUT	**Datatype:** Float	**Unit:** s	**Def:** 0.300	**3**
	P-Group: CONTROL	**Active:** Immediately	**QuickComm.:** No	**Max:** 50.000	

Integral time constant of the I_max controller.

P1341 = 0 :
I_max frequency and voltage controllers disabled

P1340 = 0 and P1341 > 0 :
frequency controller enhanced integral

P1340 > 0 and P1341 > 0 :
frequency controller normal PI control

See description in parameter P1340 for further information.

Index:

P1341[0] : 1st. Drive data set (DDS)
P1341[1] : 2nd. Drive data set (DDS)
P1341[2] : 3rd. Drive data set (DDS)

r1343	**CO: Imax controller freq. output**			**Min:** -	Level
		Datatype: Float	**Unit:** Hz	**Def:** -	**3**
	P-Group: CONTROL			**Max:** -	

Displays effective frequency limitation.

Dependency:

If I_max controller not in operation, parameter normally shows max. frequency P1082.

r1344	**CO: Imax controller volt. output**			**Min:** -	Level
		Datatype: Float	**Unit:** V	**Def:** -	**3**
	P-Group: CONTROL			**Max:** -	

Displays amount by which the I_max controller is reducing the inverter output voltage.

P1345[3]	**Imax voltage ctrl. prop. gain**			**Min:** 0.000	Level
	CStat: CUT	**Datatype:** Float	**Unit:** -	**Def:** 0.250	**3**
	P-Group: CONTROL	**Active:** Immediately	**QuickComm.:** No	**Max:** 5.499	

Proportional gain of the I_max voltage controller. See parameter P1340 for further information.

Index:

P1345[0] : 1st. Drive data set (DDS)
P1345[1] : 2nd. Drive data set (DDS)
P1345[2] : 3rd. Drive data set (DDS)

P1346[3]	**Imax voltage ctrl. integral time**			**Min:** 0.000	Level
	CStat: CUT	**Datatype:** Float	**Unit:** s	**Def:** 0.300	**3**
	P-Group: CONTROL	**Active:** Immediately	**QuickComm.:** No	**Max:** 50.000	

Integral time constant of the I_max voltage controller.

P1341 = 0 :
I_max frequency and voltage controllers disabled.

P1345 = 0 and P1346 > 0 :
I_max voltage controller enhanced integral

P1345 > 0 and P1346 > 0 :
I_max voltage controller normal PI control

See description in parameter P1340 for further information.

Index:

P1346[0] : 1st. Drive data set (DDS)
P1346[1] : 2nd. Drive data set (DDS)
P1346[2] : 3rd. Drive data set (DDS)

3.29.4 Soft starting

P1350[3]	Voltage soft start				Min: 0	Level
	CStat: CUT	Datatype: U16	Unit: -		Def: 0	3
	P-Group: CONTROL	Active: first confirm	QuickComm.: No		Max: 1	

Selecting the soft starting function.

With soft starting, the flux in the motor is established with some delay. This ensures that the motor only rotates in the required direction of rotation even with existing residual magnetism.

When activated, at powered-on, the output voltage is ramped-up to the value of the characteristic voltage within the magnetizing time P0346.

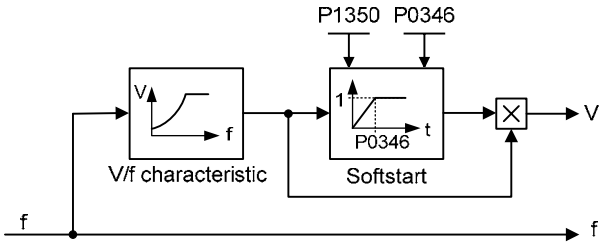

Possible Settings:

0 OFF
1 ON

Index:

P1350[0] : 1st. Drive data set (DDS)
P1350[1] : 2nd. Drive data set (DDS)
P1350[2] : 3rd. Drive data set (DDS)

Note:

The settings for this parameter bring benefits and drawbacks:

- P1350 = 0: (jump to boost voltage)
  Benefit: flux is built up quickly
  Drawback: motor may move
- P1350 = 1: (smooth voltage build-up)
  Benefit: motor less likely to move
  Drawback: flux build-up takes longer

3.30 Inverter parameters (Modulator)

P1800	Pulse frequency				Min: 2	Level
	CStat: CUT	Datatype: U16	Unit: kHz		Def: 4	2
	P-Group: INVERTER	Active: Immediately	QuickComm.: No		Max: 16	

Sets pulse frequency of power switches in inverter. The frequency can be changed in steps of 2 kHz.

Dependency:

Minimum pulse frequency depends on P1082 (maximum frequency) and P0310 (rated motor frequency).
- see derating in P1082
- P1800 > 30 * P0310

Note:
- If the pulse frequency is increased, max. inverter current r0209 can be reduced (derating). The derating characteristic depends on the type and power of the inverter (see manuall OPERATING INSTRUCTION).
- If silent operation is not absolutely necessary, lower pulse frequencies may be selected to reduce inverter losses and radio-frequency emissions.
- Under certain circumstances, the inverter may reduce the switching frequency to provide protection against over-temperature (see P0290).

r1801	CO: Act. pulse frequency			Min: -	Level
		Datatype: U16	Unit: kHz	Def: -	3
	P-Group: INVERTER			Max: -	

Actual pulse frequency of power switches in inverter.

Notice:

Under certain conditions (inverter overtemperature, see P0290), this can differ from the values selected in P1800 (pulse frequency).

P1802	Modulator mode			Min: 0	Level
	CStat: CUT	Datatype: U16	Unit: -	Def: 0	3
	P-Group: INVERTER	Active: first confirm	QuickComm.: No	Max: 3	

Selects inverter modulator mode.

Possible Settings:

0 SVM/ASVM automatic mode
1 Asymmetric SVM
2 Space vector modulation
3 SVM/ASVM controlled mode

Notice:
- Asymmetric space vector modulation (ASVM) produces lower switching losses than space vector modulation (SVM), but may cause irregular rotation at very low frequencies.
- Space vector modulation (SVM) with over-modulation may produce current waveform distortion at high output voltages.
- Space vector modulation (SVM) without over-modulation will reduce maximum output voltage available to motor.

P1820[3]	Reverse output phase sequence			Min: 0	Level
	CStat: CT	Datatype: U16	Unit: -	Def: 0	3
	P-Group: INVERTER	Active: first confirm	QuickComm.: No	Max: 1	

Changes direction of motor rotation without changing setpoint polarity.

Possible Settings:

0 OFF
1 ON

Index:

P1820[0] : 1st. Drive data set (DDS)
P1820[1] : 2nd. Drive data set (DDS)
P1820[2] : 3rd. Drive data set (DDS)

Dependency:

If positive and negative revolution is enabled, frequency setpoint is directly used.
If both positive and negative revolution are disabled, reference value is set to zero.

Details:

See P1000 (select frequency setpoint)

3.31 Motor data identification

P1910	Select motor data identification			Min: 0	Level
	CStat: CT	Datatype: U16	Unit: -	Def: 0	3
	P-Group: MOTOR	Active: first confirm	QuickComm.: Yes	Max: 20	

Performs a motor data identification.

Performs stator resistance measuring.

Possible Settings:

0 Disabled
1 Identification of Rs with parameter change
2 Identification of Rs without parameter change
20 Set voltage vector

Dependency:

No measurement if motor data incorrect.

P1910 = 1 : Calculated value for stator resistance (see P0350) is overwritten.

P1910 = 2 : Values already calculated are not overwritten.

Note:

- In order to that the motor identification routine supplies the correct data, before selecting, fast commissioning should be carried-out.
- If the motor data identification routine is activated (e.g. P1910 = 1), then at the next ON command, the measuring operation is started and alarm A0541 is generated. After the measurement is completed, both P1910 and the alarm are reset.

Notice:

When choosing the setting for measurement, observe the following:

1. "with parameter change"
means that the value is actually adopted as P0350 parameter setting and applied to the control as well as being shown in the read-only parameters below.

2. "without parameter change"
means that the value is only displayed, i.e. shown for checking purposes in the read-only parameter r1912 (identified stator resistance). The value is not applied to the control.

P1911	No. of phase to be identified			Min: 1	Level
	CStat: CT	Datatype: U16	Unit: -	Def: 3	3
	P-Group: INVERTER	Active: Immediately	QuickComm.: No	Max: 3	

Selects maximum number of motor phases to be identified.

r1912[3]	Identified stator resistance			Min: -	Level
		Datatype: Float	Unit: Ohm	Def: -	3
	P-Group: MOTOR			Max: -	

Displays measured stator resistance value (line-to-line) in [Ohms]

Index:

r1912[0] : U_phase
r1912[1] : V_phase
r1912[2] : W_phase

Note:

This value is measured using P1910 = 1 or 2 , i.e., identification of all parameters with/without change.

r1925	Identified on-state voltage			Min: -	Level
		Datatype: Float	Unit: V	Def: -	3
	P-Group: INVERTER			Max: -	

Displays identified on-state voltage of IGBT.

r1926	Ident. gating unit dead time			Min: -	Level
		Datatype: Float	Unit: us	Def: -	3
	P-Group: INVERTER			Max: -	

Displays identified dead time of gating unit interlock.

3.32 Reference parameters

P2000[3]	Reference frequency				Min: 1.00	Level
	CStat: CT	Datatype: Float	Unit: Hz		Def: 50.00	2
	P-Group: COMM	Active: first confirm	QuickComm.: No		Max: 650.00	

Parameter P2000 represents the reference frequency for frequency values which are displayed/transferred as a percentage or a hexadecimal value. Where:
- hexadecimal 4000 H ==> P2000 (e.g.: USS-PZD)
- percentage 100 % ==> P2000 (e.g.: ADC)

Index:

P2000[0] : 1st. Drive data set (DDS)
P2000[1] : 2nd. Drive data set (DDS)
P2000[2] : 3rd. Drive data set (DDS)

Example:

If a BICO connection is made between two parameters or alternatively using P0719 or P1000, the unit of the parameters (standardized (Hex) or physical (i.e. Hz) values) may differ. MICROMASTER implicitly makes an automatic conversion to the target value.

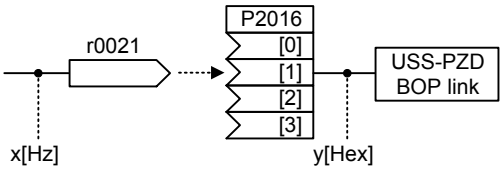

$$y[Hex] = \frac{r0021[Hz]}{P2000[Hz]} \cdot 4000[Hex]$$

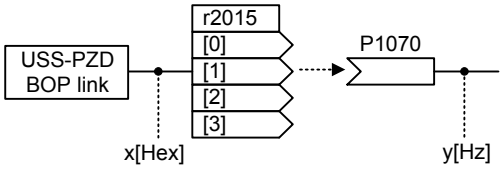

$$y[Hz] = \frac{r2015[1]}{4000[Hex]} \cdot P2000$$

Caution:

Parameter P2000 represents the reference frequency of the above mentioned interfaces. A maximum frequency setpoint of 2*P2000 can be applied via the corresponding interface. Unlike parameter P1082 (Max. Frequency) this limits the inverter frequency internally independent of the reference frequency. By modification of P2000 it will also adapt the parameter to the new settings.

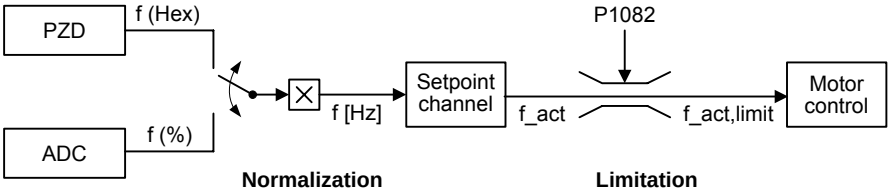

$$f[Hz] = \frac{f(Hex)}{4000(Hex)} \cdot P2000 = \frac{f(\%)}{100\ \%} \cdot P2000$$

f_act,limit = min(P1082, f_act)

Notice:

Reference variables are intended as an aid to presenting setpoint and actual value signals in a uniform manner. This also applies to fixed settings entered as a precentage. A value of 100 % (USS / CB) correspondes to a process data value of 4000H, or 4000 0000H in the case of double values.

In this respect, the following parameters are available:

P2000	Reference frequency	Hz	
P2001	Reference voltage	V	
P2002	Reference current	A	
P2003	Reference torque	Nm	
P2004	Reference power	kW hp	f(P0100)

P2001[3]	**Reference voltage**			**Min:** 10	Level
	CStat: CT	**Datatype:** U16	**Unit:** V	**Def:** 1000	**3**
	P-Group: COMM	**Active:** first confirm	**QuickComm.:** No	**Max:** 2000	

Full-scale output voltage (i.e. 100 %) used over serial link (corresponds to 4000H).

Index:

P2001[0] : 1st. Drive data set (DDS)
P2001[1] : 2nd. Drive data set (DDS)
P2001[2] : 3rd. Drive data set (DDS)

Example:

P2001 = 230 specifies that 4000H received via USS denotes 230 V.

If a BICO connection is made between two parameters, the unit of the parameters (standardized (Hex) or physical (i.e. V) values) may differ. MICROMASTER implicitly makes an automatic conversion to the target value.

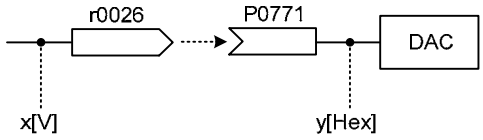

$$y[Hex] = \frac{r0026[V]}{P2001[V]} \cdot 4000[Hex]$$

P2002[3]	**Reference current**			**Min:** 0.10	Level
	CStat: CT	**Datatype:** Float	**Unit:** A	**Def:** 0.10	**3**
	P-Group: COMM	**Active:** first confirm	**QuickComm.:** No	**Max:** 10000.00	

Full-scale output current used over serial link (corresponds to 4000H).

Index:

P2002[0] : 1st. Drive data set (DDS)
P2002[1] : 2nd. Drive data set (DDS)
P2002[2] : 3rd. Drive data set (DDS)

Example:

If a BICO connection is made between two parameters, the unit of the parameters (standardized (Hex) or physical (i.e. A) values) may differ. MICROMASTER implicitly makes an automatic conversion to the target value.

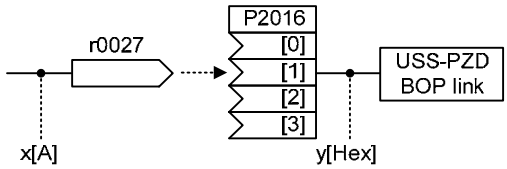

$$y[Hex] = \frac{r0027[A]}{P2002[A]} \cdot 4000[Hex]$$

P2003[3]	**Reference torque**			**Min:** 0.10	Level
	CStat: CT	**Datatype:** Float	**Unit:** Nm	**Def:** 0.12	**3**
	P-Group: COMM	**Active:** first confirm	**QuickComm.:** No	**Max:** 99999.00	

Full-scale reference torque used over the serial link (corresponds to 4000H).

Index:

P2003[0] : 1st. Drive data set (DDS)
P2003[1] : 2nd. Drive data set (DDS)
P2003[2] : 3rd. Drive data set (DDS)

Example:

If a BICO connection is made between two parameters or alternatively using P1500, the unit of the parameters (standardized (Hex) or physical (i.e. Nm) values) may differ. MICROMASTER implicitly makes an automatic conversion to the target value.

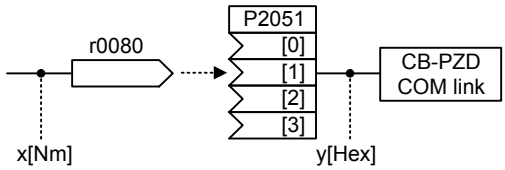

$$y[Hex] = \frac{r0080[Nm]}{P2003[Nm]} \cdot 4000[Hex]$$

P2004[3]	**Reference power**				**Min:** 0	Level
	CStat: CT	**Datatype:** Float	**Unit:** -		**Def:**	**3**
	P-Group: COMM	**Active:** first confirm	**QuickComm.:** No		**Max:** 0	

Full-scale reference power used over the serial link (corresponds to 4000H).

$$P2004 = \frac{1}{2} \cdot 2 \cdot \pi \cdot f \cdot M = \pi \cdot P2000 \cdot P2003$$

Index:

P2004[0] : 1st. Drive data set (DDS)
P2004[1] : 2nd. Drive data set (DDS)
P2004[2] : 3rd. Drive data set (DDS)

Example:

If a BICO connection is made between two parameters, the unit of the parameters (standardized (Hex) or physical (i.e. kW / hp) values) may differ. MICROMASTER implicitly makes an automatic conversion to the target value.

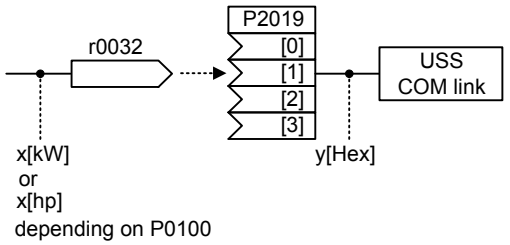

$$y[Hex] = \frac{r0032}{P2004} \cdot 4000[Hex]$$

3.33 Communication parameters (USS, CB)

P2009[2]	**USS denormalization**			**Min:** 0	Level
	CStat: CT	**Datatype:** U16	**Unit:** -	**Def:** 0	**3**
	P-Group: COMM	**Active:** first confirm	**QuickComm.:** No	**Max:** 1	

USS normalisation (compatibility).
The setting 0 gives a frequency setpoint normalisation using P2000. The setting 1 allows the setpoint to be sent as an absolute decimal value (e.g. 4000 dec = 0FA0 hex = 40.00 Hz) for backwards compatibility with previous MICROMASTER products.
The frequency setpoint is converted into 4000H format before being stored in the reply telegram by scaling the absolute value relative to P2000.

Possible Settings:

0 Disabled
1 Enabled

Index:

P2009[0] : Serial interface COM link
P2009[1] : Serial interface BOP link

Note:

- If denormalization is enabled, the main setpoint (word 2 in PZD) is not interpreted as 100 % = 4000H, but as "absolute" instead (e.g. 4000H = 16384 means 163.84 Hz) if this is a frequency. Denormalization (P2009 = 1) only works for frequencies and is intended for backwards compatibility with MM3.

- If P2009 is set 1, P2000 should be set 163,84 Hz.

P2010[2]	**USS baudrate**			**Min:** 4	Level
	CStat: CUT	**Datatype:** U16	**Unit:** -	**Def:** 6	**3**
	P-Group: COMM	**Active:** first confirm	**QuickComm.:** No	**Max:** 12	

Sets baud rate for USS communication.

Possible Settings:

4 2400 baud
5 4800 baud
6 9600 baud
7 19200 baud
8 38400 baud
9 57600 baud
10 76800 baud
11 93750 baud
12 115200 baud

Index:

P2010[0] : Serial interface COM link
P2010[1] : Serial interface BOP link

P2011[2]	**USS address**			**Min:** 0	Level
	CStat: CUT	**Datatype:** U16	**Unit:** -	**Def:** 0	**3**
	P-Group: COMM	**Active:** first confirm	**QuickComm.:** No	**Max:** 31	

Sets unique address for inverter.

Index:

P2011[0] : Serial interface COM link
P2011[1] : Serial interface BOP link

Note:

You can connect up to a further 30 inverters via the serial link (i.e. 31 inverters in total) and control them with the USS serial bus protocol.

P2012[2]	**USS PZD length**				**Min:** 0	Level
	CStat: CUT	**Datatype:** U16	**Unit:** -		**Def:** 2	**3**
	P-Group: COMM	**Active:** first confirm	**QuickComm.:** No		**Max:** 8	

Defines the number of 16-bit words in PZD part of USS telegram.

Index:

P2012[0] : Serial interface COM link
P2012[1] : Serial interface BOP link

Notice:

USS protocol consists of PZD and PKW which can be changed by the user via parameters P2012 and P2013 respectively.

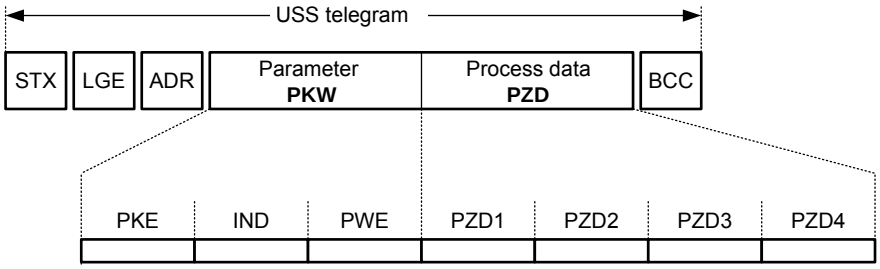

STX	Start of text	PKE	Parameter ID
LGE	Length	IND	Sub-index
ADR	Address	PWE	Parameter value
PKW	Parameter ID value		
PZD	Process data		
BCC	Block check character		

PZD transmits a control word and setpoint or status word and actual values. The number of PZD-words in a USS-telegram are determined by parameter P2012, where the first two words (P2012 >= 2) are either:

- control word and main setpoint or
- status word and actual value.

Restrictions:

- If the serial interface controls the inverter (P0700 or P0719) then the 1st control word must be transferred in the 1st PZD-word.
- If the setpoint source is selected via P1000 or P0719, then the main setpoint must be transfered in the 2nd PZD-word,
- When P2012 is greater than or equal to 4 the additional control word (2nd control word) must transferred in the 4th PZD-word, if the serial interface controls the inverter (P0700 or P0719).

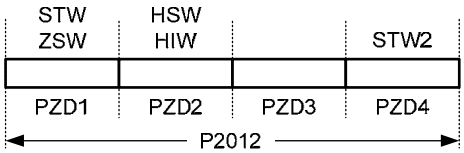

STW	Control word	HSW	Main setpoint
ZSW	Status word	HIW	Main actual value
PZD	Process data		

P2013[2]	**USS PKW length**			**Min:** 0	Level
	CStat: CUT	**Datatype:** U16	**Unit:** -	**Def:** 127	**3**
	P-Group: COMM	**Active:** first confirm	**QuickComm.:** No	**Max:** 127	

Defines the number of 16-bit words in PKW part of USS telegram.

The PKW area can be varied. Depending on the particular requirement, 3-word, 4-word or variable word lengths can be parameterized. The PKW part of the USS telegram is used to read and write individual parameter values.

Possible Settings:

0 No words
3 3 words
4 4 words
127 Variable

Index:

P2013[0] : Serial interface COM link
P2013[1] : Serial interface BOP link

Example:

	Data type		
	U16 (16 Bit)	U32 (32 Bit)	Float (32 Bit)
P2013 = 3	X	Parameter access fault	Parameter access fault
P2013 = 4	X	X	X
P2013 = 127	X	X	X

Notice:

USS protocol consists of PZD and PKW which can be changed by the user via parameters P2012 and P2013 respectively. Parameter P2013 determines the number of PKW-words in a USS-telegram.

Setting P2013 to 3 or 4 determines the length of the PKW (3 = three words and 4 = four words). When P2013 set to 127 automatically adjusts the length of the PKW words are required.

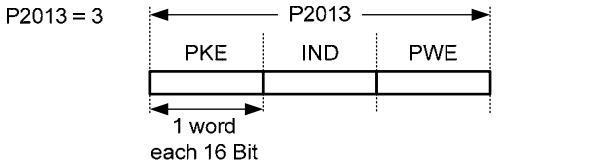

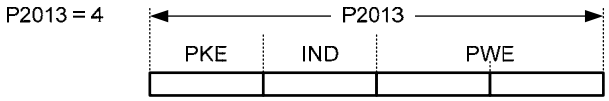

PKE Parameter ID
IND Sub-index
PWE Parameter value

If a fixed PKW length is selected only one parameter value can be transferred. In the case of indexed parameter, you must use the variable PKW length if you wish to have the values of all indices transferred in a single telegram. In selecting the fixed PKW length, it is important to ensure the value in question can be transferred using this PKW length.

P2013 = 3, fixes PKW length, but does not allow access to many parameter values. A parameter fault is generated when an out-of-range value is used, the value will not be accepted but the inverter state will not be affected. Useful for applications where parameters are not changed, but MM3s are also used. Broadcast mode is not possible with this setting.

P2013 = 4, fixes PKW length. Allows access to all parameters, but indexed parameters can only be read one index at a time. Word order for single word values are different to setting 3 or 127, see example below.

P2013 = 127, most useful setting. PKW reply length varies depending on the amount of information needed. Can read fault information and all indices of a parameter with a single telegram with this setting.

Example:
Set P0700 to value 5 (0700 = 2BC (hex))

	P2013 = 3	P2013 = 4	P2013 = 127
Master → MM4	22BC 0000 0005	22BC 0000 0000 0005	22BC 0000 0005 0000
MM4 → Master	12BC 0000 0005	12BC 0000 0000 0005	12BC 0000 0005

P2014[2]	**USS telegram off time**			**Min:** 0	Level
	CStat: CT	**Datatype:** U16	**Unit:** ms	**Def:** 0	**3**
	P-Group: COMM	**Active:** Immediately	**QuickComm.:** No	**Max:** 65535	

Defines the telegram failure time for the serial interfaces with USS protocol.

The telegram failure time defines the time within which a valid telegram must have been received. If a valid telegram is not received within the specified time, the drive inverter outputs fault F0070.

Index:

P2014[0] : Serial interface COM link
P2014[1] : Serial interface BOP link

Notice:

By default (time set to 0), no fault is generated (i.e. watchdog disabled).

r2015[8]	**CO: PZD from BOP link (USS)**			**Min:** -	Level
		Datatype: U16	**Unit:** -	**Def:** -	**3**
	P-Group: COMM			**Max:** -	

Displays process data received via USS on BOP link (RS232 USS).

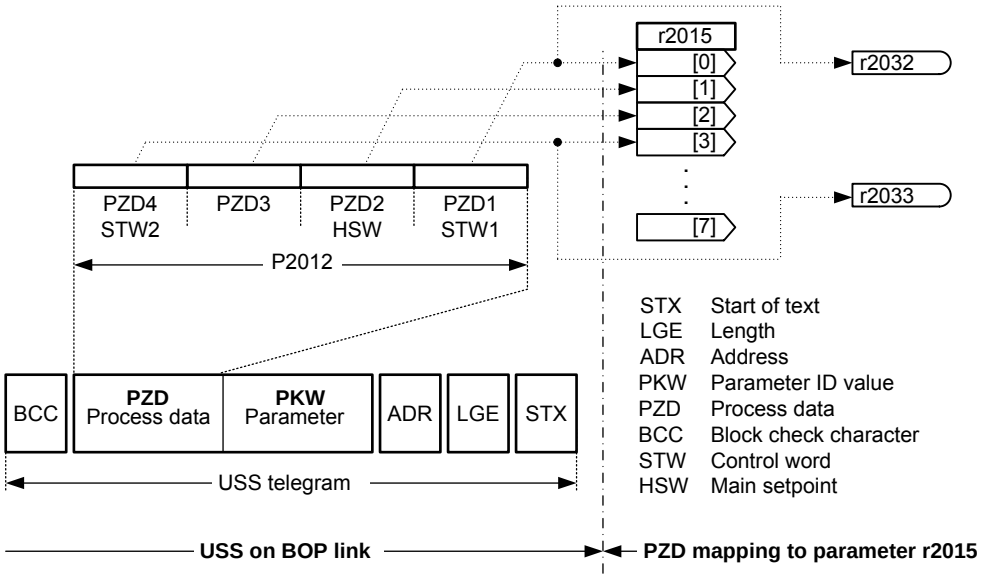

Index:

r2015[0] : Received word 0
r2015[1] : Received word 1
r2015[2] : Received word 2
r2015[3] : Received word 3
r2015[4] : Received word 4
r2015[5] : Received word 5
r2015[6] : Received word 6
r2015[7] : Received word 7

Note:

The control words can be viewed as bit parameters r2032 and r2033.

Restrictions:

- If the obove serial interface controls the inverter (P0700 or P0719) then the 1st control word must be transferred in the 1st PZD-word.
- If the setpoint source is selected via P1000 or P0719, then the main setpoint must be transfered in the 2nd PZD-word,
- When P2012 is greater than or equal to 4 the additional control word (2nd control word) must transferred in the 4th PZD-word, if the obove serial interface controls the inverter (P0700 or P0719).

P2016[8]	**CI: PZD to BOP link (USS)**			**Min:** 0:0	Level
	CStat: CT	**Datatype:** U32	**Unit:** -	**Def:** 52:0	**3**
	P-Group: COMM	**Active:** Immediately	**QuickComm.:** No	**Max:** 4000:0	

Selects signals (process data PZD) to be transmitted to serial interface via USS on BOP link

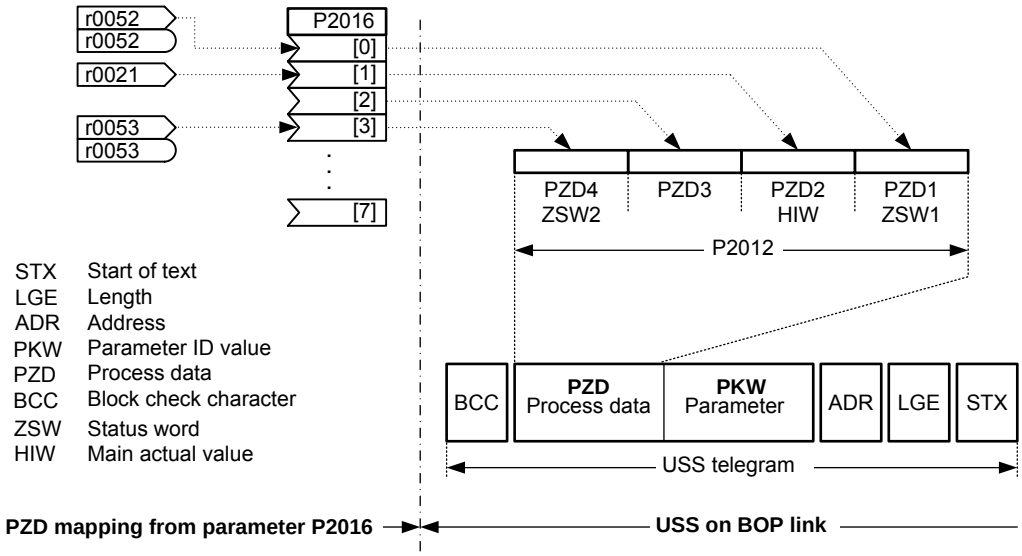

Index:

P2016[0] : Transmitted word 0
P2016[1] : Transmitted word 1
P2016[2] : Transmitted word 2
P2016[3] : Transmitted word 3
P2016[4] : Transmitted word 4
P2016[5] : Transmitted word 5
P2016[6] : Transmitted word 6
P2016[7] : Transmitted word 7

Example:

P2016[0] = 52.0 (default). In this case, the value of r0052[0] (CO/BO: Status word) is transmitted as 1st PZD to the BOP link.

Note:

If r0052 not indexed, display does not show an index (".0").

r2018[8]	CO: PZD from COM link (USS)	Min: -	Level
	Datatype: U16 Unit: -	Def: -	3
	P-Group: COMM	Max: -	

Displays process data received via USS on COM link.

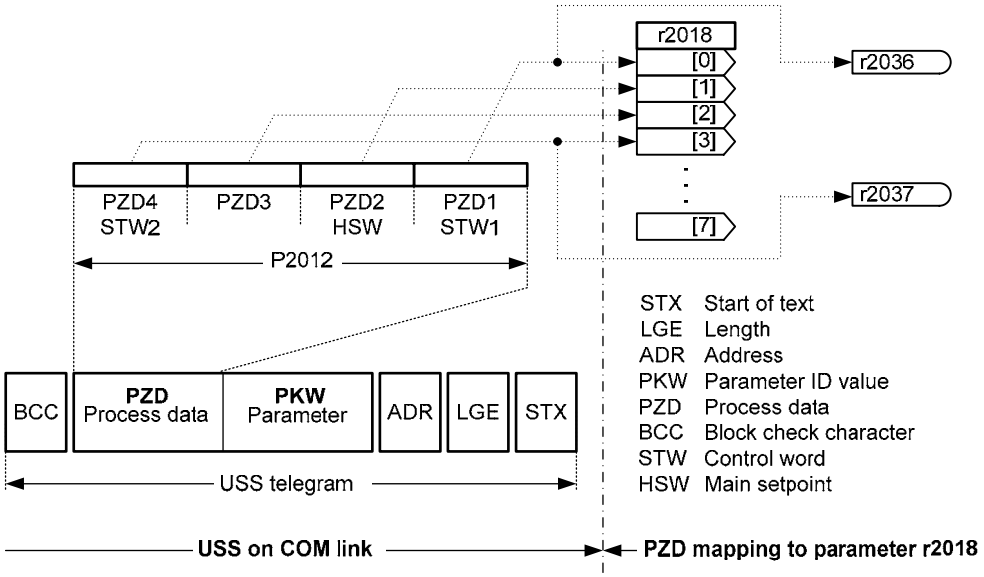

Index:

r2018[0] : Received word 0
r2018[1] : Received word 1
r2018[2] : Received word 2
r2018[3] : Received word 3
r2018[4] : Received word 4
r2018[5] : Received word 5
r2018[6] : Received word 6
r2018[7] : Received word 7

Note:

The control words can be viewed as bit parameters r2036 and r2037.

Restrictions:

- If the obove serial interface controls the inverter (P0700 or P0719) then the 1st control word must be transferred in the 1st PZD-word.
- If the setpoint source is selected via P1000 or P0719, then the main setpoint must be transfered in the 2nd PZD-word,
- When P2012 is greater than or equal to 4 the additional control word (2nd control word) must transferred in the 4th PZD-word, if the obove serial interface controls the inverter (P0700 or P0719).

P2019[8]	**CI: PZD to COM link (USS)**			**Min:** 0:0	Level
	CStat: CT	**Datatype:** U32	**Unit:** -	**Def:** 52:0	**3**
	P-Group: COMM	**Active:** Immediately	**QuickComm.:** No	**Max:** 4000:0	

Selects signals (process data PZD) to be transmitted to serial interface via USS on COM link

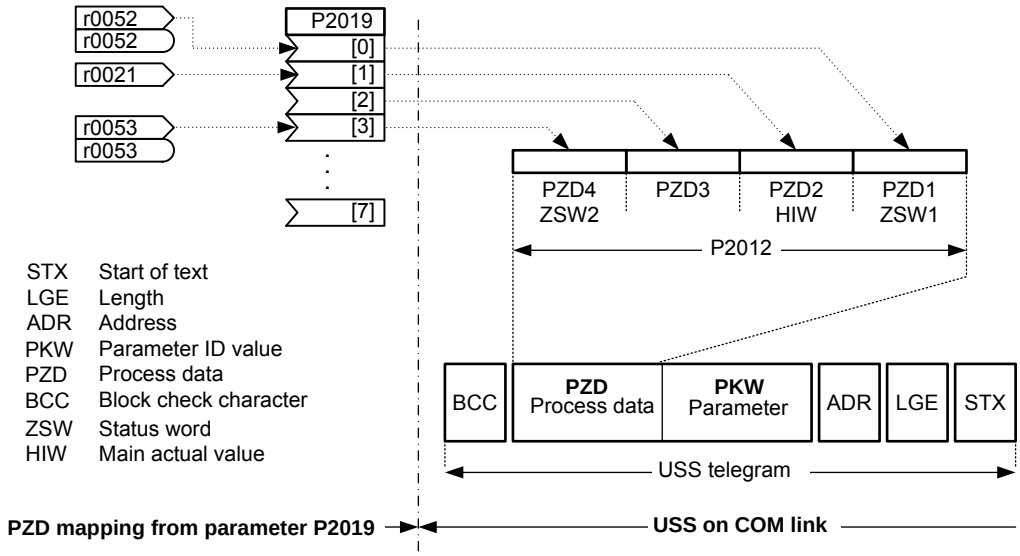

Index:

P2019[0] : Transmitted word 0
P2019[1] : Transmitted word 1
P2019[2] : Transmitted word 2
P2019[3] : Transmitted word 3
P2019[4] : Transmitted word 4
P2019[5] : Transmitted word 5
P2019[6] : Transmitted word 6
P2019[7] : Transmitted word 7

Details:

See P2016 (PZD to BOP link)

r2024[2]	**USS error-free telegrams**			**Min:** -	Level
		Datatype: U16	**Unit:** -	**Def:** -	**3**
	P-Group: COMM			**Max:** -	

Displays number of error-free USS telegrams received.

Index:

r2024[0] : Serial interface COM link
r2024[1] : Serial interface BOP link

r2025[2]	**USS rejected telegrams**			**Min:** -	Level
		Datatype: U16	**Unit:** -	**Def:** -	**3**
	P-Group: COMM			**Max:** -	

Displays the number of rejected USS telegrams. The sum of all USS errors (r2026 - r2031) is displayed in parameter r2025.

The following monitoring mechanisms have been implemented

- when a telegram is received, then initially, the correct start of a telegram (start interval + STX) must be identified and then the length must be evaluated (LGE). If the length does not correspond to the selected value for a fixed telegram or it does not have a valid value for a variable telegram length, the telegram is rejected.
- the appropriate times are monitored before and while receiving telegrams.
- the block check character (BCC) is generated while the telegram is received and after the complete telegram has been read-in, this is compared with the received BCC. If these do not match, then the telegram is not evaluated.
- if a character frame error or a parity error has not occurred in any of the received characters, then the node number (ADR) of the received telegram can be evaluated.
- the telegram is rejected if the address byte (ADR) does not correspond to the node number (for slave) or the expected slave node number (for the master).

Index:

r2025[0] : Serial interface COM link
r2025[1] : Serial interface BOP link

r2026[2]	USS character frame error	Datatype: U16	Unit: -	Min: -	Def: -	Max: -	Level 3
	P-Group: COMM						

Displays number of USS character frame errors.

Index:

r2026[0] : Serial interface COM link
r2026[1] : Serial interface BOP link

r2027[2]	USS overrun error	Datatype: U16	Unit: -	Min: -	Def: -	Max: -	Level 3
	P-Group: COMM						

Displays number of USS telegrams with overrun error.

Index:

r2027[0] : Serial interface COM link
r2027[1] : Serial interface BOP link

r2028[2]	USS parity error	Datatype: U16	Unit: -	Min: -	Def: -	Max: -	Level 3
	P-Group: COMM						

Displays number of USS telegrams with parity error.

Index:

r2028[0] : Serial interface COM link
r2028[1] : Serial interface BOP link

r2029[2]	USS start not identified	Datatype: U16	Unit: -	Min: -	Def: -	Max: -	Level 3
	P-Group: COMM						

Displays number of USS telegrams with unidentified start.

Index:

r2029[0] : Serial interface COM link
r2029[1] : Serial interface BOP link

r2030[2]	USS BCC error	Datatype: U16	Unit: -	Min: -	Def: -	Max: -	Level 3
	P-Group: COMM						

Displays number of USS telegrams with BCC error.

Index:

r2030[0] : Serial interface COM link
r2030[1] : Serial interface BOP link

r2031[2]	USS length error	Datatype: U16	Unit: -	Min: -	Def: -	Max: -	Level 3
	P-Group: COMM						

Displays number of USS telegrams with incorrect length.

Index:

r2031[0] : Serial interface COM link
r2031[1] : Serial interface BOP link

r2032	BO: CtrlWrd1 from BOP link (USS)	Datatype: U16	Unit: -	Min: -	Def: -	Max: -	Level 3
	P-Group: COMM						

Displays control word 1 from BOP link (word 1 within USS).

Bitfields:

Bit00	ON/OFF1	0	NO	1	YES
Bit01	OFF2: Electrical stop	0	YES	1	NO
Bit02	OFF3: Fast stop	0	YES	1	NO
Bit03	Pulses enabled	0	NO	1	YES
Bit04	RFG enable	0	NO	1	YES
Bit05	RFG start	0	NO	1	YES
Bit06	Setpoint enable	0	NO	1	YES
Bit07	Fault acknowledge	0	NO	1	YES
Bit08	reserved				
Bit09	reserved				
Bit10	Control from PLC	0	NO	1	YES
Bit11	Reverse (setpoint inversion)	0	NO	1	YES
Bit13	Motor potentiometer MOP up	0	NO	1	YES
Bit14	Motor potentiometer MOP down	0	NO	1	YES
Bit15	CDS Bit 0 (Local/Remote)	0	NO	1	YES

r2033	BO: CtrlWrd2 from BOP link (USS)	Datatype: U16	Unit: -	Min: -	Def: -	Max: -	Level 3
	P-Group: COMM						

Displays control word 2 from BOP link (i.e. word 4 within USS).

Bitfields:

Bit00	Fixed frequency Bit 0	0	NO	1	YES
Bit01	Fixed frequency Bit 1	0	NO	1	YES
Bit02	Fixed frequency Bit 2	0	NO	1	YES
Bit03	Fixed frequency Bit 3	0	NO	1	YES
Bit04	Drive data set (DDS) Bit 0	0	NO	1	YES
Bit05	Drive data set (DDS) Bit 1	0	NO	1	YES
Bit08	PID enabled	0	NO	1	YES
Bit09	DC brake enabled	0	NO	1	YES
Bit11	reserved				
Bit12	reserved				
Bit13	External fault 1	0	YES	1	NO
Bit15	Command data set (CDS) Bit 1	0	NO	1	YES

Dependency:

P0700 = 4 (USS on BOP link) and P0719 = 0 (Cmd / Setpoint = BICO parameter).

r2036	BO: CtrlWrd1 from COM link (USS)	Datatype: U16	Unit: -	Min: -	Def: -	Max: -	Level 3
	P-Group: COMM						

Displays control word 1 from COM link (i.e. word 1 within USS).

Bitfields:

Bit00	ON/OFF1	0	NO	1	YES
Bit01	OFF2: Electrical stop	0	YES	1	NO
Bit02	OFF3: Fast stop	0	YES	1	NO
Bit03	Pulses enabled	0	NO	1	YES
Bit04	RFG enable	0	NO	1	YES
Bit05	RFG start	0	NO	1	YES
Bit06	Setpoint enable	0	NO	1	YES
Bit07	Fault acknowledge	0	NO	1	YES
Bit08	reserved				
Bit09	reserved				
Bit10	Control from PLC	0	NO	1	YES
Bit11	Reverse (setpoint inversion)	0	NO	1	YES
Bit13	Motor potentiometer MOP up	0	NO	1	YES
Bit14	Motor potentiometer MOP down	0	NO	1	YES
Bit15	CDS Bit 0 (Local/Remote)	0	NO	1	YES

Details:

See r2033 (control word 2 from BOP link).

r2037	BO: CtrlWrd2 from COM link (USS)	Datatype: U16	Unit: -	Min: -	Def: -	Max: -	Level 3
	P-Group: COMM						

Displays control word 2 from COM link (i.e. word 4 within USS).

Bitfields:

Bit00	Fixed frequency Bit 0	0	NO	1	YES
Bit01	Fixed frequency Bit 1	0	NO	1	YES
Bit02	Fixed frequency Bit 2	0	NO	1	YES
Bit03	Fixed frequency Bit 3	0	NO	1	YES
Bit04	Drive data set (DDS) Bit 0	0	NO	1	YES
Bit05	Drive data set (DDS) Bit 1	0	NO	1	YES
Bit08	PID enabled	0	NO	1	YES
Bit09	DC brake enabled	0	NO	1	YES
Bit11	reserved				
Bit12	reserved				
Bit13	External fault 1	0	YES	1	NO
Bit15	Command data set (CDS) Bit 1	0	NO	1	YES

Details:

See r2033 (control word 2 from BOP link).

P2040	CB telegram off time			Min: 0	Level
	CStat: CT	Datatype: U16	Unit: ms	Def: 20	3
	P-Group: COMM	Active: Immediately	QuickComm.: No	Max: 65535	

Defines time after which a fault will be generated (F0070) if no telegram is received via the link.

Dependency:

Setting 0 = watchdog disabled

P2041[5]	CB parameter			Min: 0	Level
	CStat: CT	Datatype: U16	Unit: -	Def: 0	3
	P-Group: COMM	Active: first confirm	QuickComm.: No	Max: 65535	

Configures a communication board (CB).

Index:

P2041[0] : CB parameter 0
P2041[1] : CB parameter 1
P2041[2] : CB parameter 2
P2041[3] : CB parameter 3
P2041[4] : CB parameter 4

Details:

See relevant communication board manual for protocol definition and appropriate settings.

r2050[8]	CO: PZD from CB			Min: -	Level
		Datatype: U16	Unit: -	Def: -	3
	P-Group: COMM			Max: -	

Displays PZD received from communication board (CB).

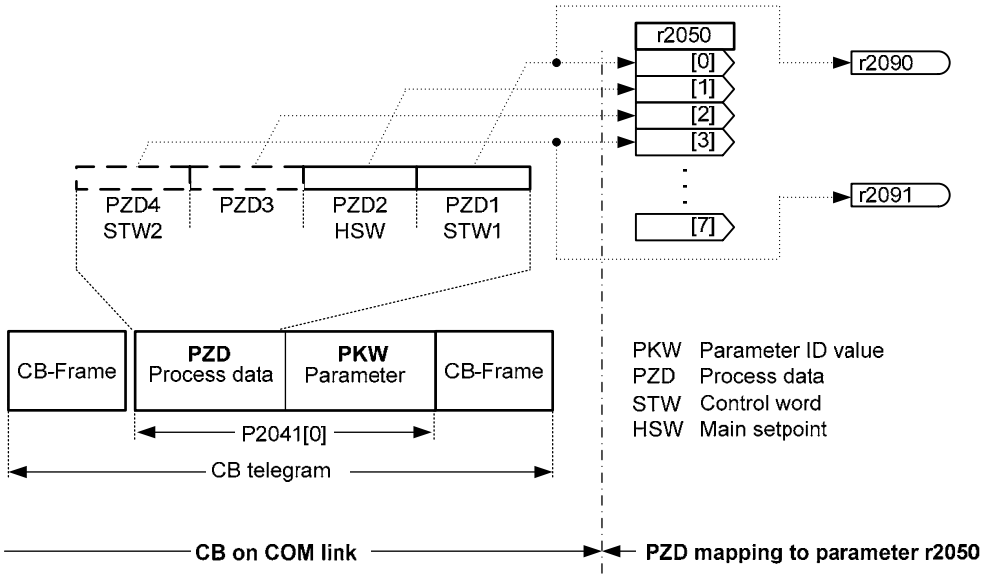

Index:

r2050[0] : Received word 0
r2050[1] : Received word 1
r2050[2] : Received word 2
r2050[3] : Received word 3
r2050[4] : Received word 4
r2050[5] : Received word 5
r2050[6] : Received word 6
r2050[7] : Received word 7

Note:

The control words can be viewed as bit parameters r2090 and r2091.

Restrictions:

- If the obove serial interface controls the inverter (P0700 or P0719) then the 1st control word must be transferred in the 1st PZD-word.
- If the setpoint source is selected via P1000 or P0719, then the main setpoint must be transfered in the 2nd PZD-word,
- When P2012 is greater than or equal to 4 the additional control word (2nd control word) must transferred in the 4th PZD-word, if the obove serial interface controls the inverter (P0700 or P0719).

P2051[8]	**CI: PZD to CB**			**Min:** 0:0	Level
	CStat: CT	**Datatype:** U32	**Unit:** -	**Def:** 52:0	**3**
	P-Group: COMM	**Active:** Immediately	**QuickComm.:** No	**Max:** 4000:0	

Selects signals (process data PZD) to be transmitted via CB on COM link

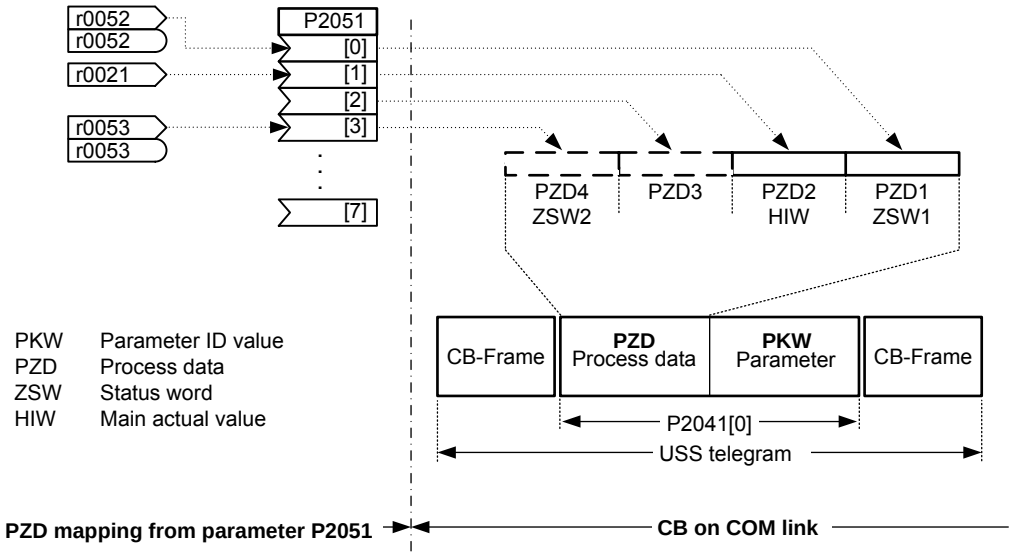

Index:

P2051[0] : Transmitted word 0
P2051[1] : Transmitted word 1
P2051[2] : Transmitted word 2
P2051[3] : Transmitted word 3
P2051[4] : Transmitted word 4
P2051[5] : Transmitted word 5
P2051[6] : Transmitted word 6
P2051[7] : Transmitted word 7

Common Settings:

- Status word 1 = 52 CO/BO: Act. status word 1 (see r0052)
- Actual value 1 = 21 inverter output frequency (see r0021)
- Other BICO settings are possible

r2053[5]	**CB identification**			**Min:** -	Level
		Datatype: U16	**Unit:** -	**Def:** -	**3**
	P-Group: COMM			**Max:** -	

Displays identification data of the communication board (CB). The different CB types (r2053[0]) are given in the Enum declaration.

Possible Settings:

0 No CB option board
1 PROFIBUS DP
2 DeviceNet
256 not defined

Index:

r2053[0] : CB type (PROFIBUS = 1)
r2053[1] : Firmware version
r2053[2] : Firmware version detail
r2053[3] : Firmware date (year)
r2053[4] : Firmware date (day/month)

r2054[7]	**CB diagnosis**			**Min:** -	Level
		Datatype: U16	**Unit:** -	**Def:** -	**3**
	P-Group: COMM			**Max:** -	

Displays diagnostic information of communication board (CB).

Index:

r2054[0] : CB diagnosis 0
r2054[1] : CB diagnosis 1
r2054[2] : CB diagnosis 2
r2054[3] : CB diagnosis 3
r2054[4] : CB diagnosis 4
r2054[5] : CB diagnosis 5
r2054[6] : CB diagnosis 6

Details:

See relevant communications board manual.

r2090	**BO: Control word 1 from CB**			**Min:** -	Level
		Datatype: U16	**Unit:** -	**Def:** -	**3**
	P-Group: COMM			**Max:** -	

Displays control word 1 received from communication board (CB).

Bitfields:

Bit00	ON/OFF1	0	NO	1	YES
Bit01	OFF2: Electrical stop	0	YES	1	NO
Bit02	OFF3: Fast stop	0	YES	1	NO
Bit03	Pulses enabled	0	NO	1	YES
Bit04	RFG enable	0	NO	1	YES
Bit05	RFG start	0	NO	1	YES
Bit06	Setpoint enable	0	NO	1	YES
Bit07	Fault acknowledge	0	NO	1	YES
Bit08	reserved				
Bit09	reserved				
Bit10	Control from PLC	0	NO	1	YES
Bit11	Reverse (setpoint inversion)	0	NO	1	YES
Bit13	Motor potentiometer MOP up	0	NO	1	YES
Bit14	Motor potentiometer MOP down	0	NO	1	YES
Bit15	CDS Bit 0 (Local/Remote)	0	NO	1	YES

Details:

See relevant communication board manual for protocol definition and appropriate settings.

r2091	**BO: Control word 2 from CB**			**Min:** -	Level
		Datatype: U16	**Unit:** -	**Def:** -	**3**
	P-Group: COMM			**Max:** -	

Displays control word 2 received from communication board (CB).

Bitfields:

Bit00	Fixed frequency Bit 0	0	NO	1	YES
Bit01	Fixed frequency Bit 1	0	NO	1	YES
Bit02	Fixed frequency Bit 2	0	NO	1	YES
Bit03	Fixed frequency Bit 3	0	NO	1	YES
Bit04	Drive data set (DDS) Bit 0	0	NO	1	YES
Bit05	Drive data set (DDS) Bit 1	0	NO	1	YES
Bit08	PID enabled	0	NO	1	YES
Bit09	DC brake enabled	0	NO	1	YES
Bit11	reserved				
Bit12	reserved				
Bit13	External fault 1	0	YES	1	NO
Bit15	Command data set (CDS) Bit 1	0	NO	1	YES

Details:

See relevant communication board manual for protocol definition and appropriate settings.

3.34 Faults, Alarms, Monitoring

P2100[3]	Alarm number selection				Min: 0	Level
	CStat: CT	Datatype: U16	Unit: -		Def: 0	3
	P-Group: ALARMS	Active: first confirm	QuickComm.: No		Max: 65535	

Selects up to 3 faults or warnings for non-default reactions.

Index:

P2100[0] : Fault Number 1
P2100[1] : Fault Number 2
P2100[2] : Fault Number 3

Example:

If, for example, an OFF3 is to be carried out instead of an OFF2 for a fault, the fault number has to be entered in P2100 and the desired reaction selected in P2101 (in this case (OFF3) P2101 = 3).

Note:

All fault codes have a default reaction to OFF2. Some fault codes caused by hardware trips (e.g. overcurrent) cannot be changed from the default reactions.

P2101[3]	Stop reaction value				Min: 0	Level
	CStat: CT	Datatype: U16	Unit: -		Def: 0	3
	P-Group: ALARMS	Active: first confirm	QuickComm.: No		Max: 5	

Sets drive stop reaction values for fault selected by P2100 (alarm number stop reaction).

This indexed parameter specifies the special reaction to the faults/warnings defined in P2100 indices 0 to 2.

Possible Settings:

0 No reaction, no display
1 OFF1 stop reaction
2 OFF2 stop reaction
3 OFF3 stop reaction
4 No reaction warning only
5 Goto fixed frequency 15

Index:

P2101[0] : Stop reaction value 1
P2101[1] : Stop reaction value 2
P2101[2] : Stop reaction value 3

Note:

- Settings 0 - 3 only are available for fault codes.
- Settings 0 and 4 only are available for warnings.
- Index 0 (P2101) refers to fault/warning in index 0 (P2100).
- The value 5 can only be used for the following fault numbers: 70, 71, 72, 80.
- When the setpoint is lost, this function can be used to change over the drive to fixed frequency 15. This means, that when the setpoint is lost, the drive system can continue to run and plant-system downtimes can be avoided.

P2103[3]	BI: 1. Faults acknowledgement				Min: 0:0	Level
	CStat: CT	Datatype: U32	Unit: -		Def: 722:2	3
	P-Group: COMMANDS	Active: first confirm	QuickComm.: No		Max: 4000:0	

Defines first source of fault acknowledgement, e.g. keypad/DIN, etc. (depending on setting).

Index:

P2103[0] : 1st. Command data set (CDS)
P2103[1] : 2nd. Command data set (CDS)
P2103[2] : 3rd. Command data set (CDS)

Common Settings:

722.0 = Digital input 1 (requires P0701 to be set to 99, BICO)
722.1 = Digital input 2 (requires P0702 to be set to 99, BICO)
722.2 = Digital input 3 (requires P0703 to be set to 99, BICO)
722.3 = Digital input 4 (requires P0704 to be set to 99, BICO)
722.4 = Digital input 5 (requires P0705 to be set to 99, BICO)
722.5 = Digital input 6 (requires P0706 to be set to 99, BICO)
722.6 = Digital input 7 (via analog input 1, requires P0707 to be set to 99)
722.7 = Digital input 8 (via analog input 2, requires P0708 to be set to 99)

P2104[3]	**BI: 2. Faults acknowledgement**			**Min:** 0:0	Level
	CStat: CT	**Datatype:** U32	**Unit:** -	**Def:** 0:0	**3**
	P-Group: COMMANDS	**Active:** first confirm	**QuickComm.:** No	**Max:** 4000:0	

Selects second source of fault acknowledgement.

Index:

P2104[0] : 1st. Command data set (CDS)
P2104[1] : 2nd. Command data set (CDS)
P2104[2] : 3rd. Command data set (CDS)

Common Settings:

722.0 = Digital input 1 (requires P0701 to be set to 99, BICO)
722.1 = Digital input 2 (requires P0702 to be set to 99, BICO)
722.2 = Digital input 3 (requires P0703 to be set to 99, BICO)
722.3 = Digital input 4 (requires P0704 to be set to 99, BICO)
722.4 = Digital input 5 (requires P0705 to be set to 99, BICO)
722.5 = Digital input 6 (requires P0706 to be set to 99, BICO)
722.6 = Digital input 7 (via analog input 1, requires P0707 to be set to 99)
722.7 = Digital input 8 (via analog input 2, requires P0708 to be set to 99)

P2106[3]	**BI: External fault**			**Min:** 0:0	Level
	CStat: CT	**Datatype:** U32	**Unit:** -	**Def:** 1:0	**3**
	P-Group: COMMANDS	**Active:** first confirm	**QuickComm.:** No	**Max:** 4000:0	

Selects source of external faults.

Index:

P2106[0] : 1st. Command data set (CDS)
P2106[1] : 2nd. Command data set (CDS)
P2106[2] : 3rd. Command data set (CDS)

Common Settings:

722.0 = Digital input 1 (requires P0701 to be set to 99, BICO)
722.1 = Digital input 2 (requires P0702 to be set to 99, BICO)
722.2 = Digital input 3 (requires P0703 to be set to 99, BICO)
722.3 = Digital input 4 (requires P0704 to be set to 99, BICO)
722.4 = Digital input 5 (requires P0705 to be set to 99, BICO)
722.5 = Digital input 6 (requires P0706 to be set to 99, BICO)
722.6 = Digital input 7 (via analog input 1, requires P0707 to be set to 99)
722.7 = Digital input 8 (via analog input 2, requires P0708 to be set to 99)

r2110[4]	**CO: Warning number**			**Min:** -	Level
		Datatype: U16	**Unit:** -	**Def:** -	**3**
	P-Group: ALARMS			**Max:** -	

Displays warning information.
A maximum of 2 active warnings (indices 0 and 1) and 2 historical warnings (indices 2 and 3) may be viewed.

Index:

r2110[0] : Recent Warnings --, warning 1
r2110[1] : Recent Warnings --, warning 2
r2110[2] : Recent Warnings -1, warning 3
r2110[3] : Recent Warnings -1, warning 4

Note:

- Indices 0 and 1 are not stored.
- The keypad will flash while a warning is active. The LEDs indicate the warning status in this case.

P2111	**Total number of warnings**			**Min:** 0	Level
	CStat: CUT	**Datatype:** U16	**Unit:** -	**Def:** 0	**3**
	P-Group: ALARMS	**Active:** first confirm	**QuickComm.:** No	**Max:** 4	

Displays number of warning (up to 4) since last reset. Set to 0 to reset the warning history.

r2114[2]	**Run time counter**			**Min:** -	Level
		Datatype: U16	**Unit:** -	**Def:** -	**3**
	P-Group: ALARMS			**Max:** -	

Displays run time counter.
It is the total time the drive has been powered up. When power goes value is saved, then restored on powerup. The run time counter r2114 will be calculate as followed:

- Multiply the value in r2114[0], by 65536 and then add it to the value in r2114[1].
- The resultant answer will be in seconds.

Total powerup time= 65536*r2114[0]+r2114[1] Secs.
When AOP is not connected, the time in this parameter is used by r0948 to indicate when a fault has occured.

Index:

r2114[0] : System Time, Seconds, Upper Word
r2114[1] : System Time, Seconds, Lower Word

Example:

If r2114[0] = 1 & r2114[1] = 20864
We get 1 * 65536 + 20864 = 86400 seconds which equals 1 day.

P2115[3]	**AOP real time clock**			**Min:** 0	Level
	CStat: CT	**Datatype:** U16	**Unit:** -	**Def:** 0	**4**
	P-Group: ALARMS	**Active:** Immediately	**QuickComm.:** No	**Max:** 65535	

Displays AOP real time.

All of the frequency inverters have an internal time generator function which is used to time-stamp and log erroneous conditions. Therefore there is no battery-buffered real-time clock (RTC). The frequency inverters can support a software-controlled RTC where the RTC must be set from the AOP or via an interface. When using the AOP, this synchronization is automatic. When a serial interface is used, a task must be sent from the higher-level control to write into the parameter. If the AOP is withdrawn during operation, or if the bus is interrupted, then the real-time clock runs further using the runtime counter. The real-time clock is reset to zero only after power off.

The time is stored in a word array parameter P2115. This parameter number is common to all invertes. Inverters not supporting this feature would respond with parameter not recognised - a Master will ignore this. The time will be set by USS Protocol standard word array parameter write telegrams.

Within the AOP, while it is acting as a USS Master, at each tick of the heartbeat, the list of available USS Slaves will be flagged with a time update request. As the Master runs around the list of USS slaves on its next USS update cycle, if there are no higher priority tasks to perform, and the slave still has its time update flag set, then an array parameter write telegram will be issued, containing the current time. The request for that slave is cancelled if the slave responds correctly. The AOP will not need to read the time from the slave.

Time is maintained in a word array parameter and encoded as follows - the same format will be used in fault report logs.

Index	High Byte (MSB)	Low Byte (LSB)
0	Seconds (0 - 59)	Minutes (0 - 59)
1	Hours (0 - 23)	Days (1 - 31)
2	Month (1 - 12)	Years (00 - 250)

Time is measured from Jan 1st 2000. Values are in binary form.

Index:

P2115[0] : Real Time, Seconds+Minutes
P2115[1] : Real Time, Hours+Days
P2115[2] : Real Time, Month+Year

Example:

P2115[0] = 13625
P2115[1] = 2579
P2115[2] = 516

The conversion into binary quantities (U16) results in the following bit pattern:
Seconds + minutes:
- High byte (MSB) = 00110101 corresponding to the number 53, i.e. seconds 53
- Low byte (LSB) = 00111001 corresponding to the number 57, i.e. minutes 57

Hours + days:
- High byte (MSB) = 00001010 corresponding to the number 10, i.e. hours 10
- Low byte (LSB) = 00010011 corresponding to the number 19, i.e. days 19

Months + year:
- High byte (MSB) = 00000010 corresponding to the number 2, i.e. months 2
- Low byte (LSB) = 00000100 corresponding to the number 4, i.e. years 4

This means that the real time displayed in P2115 is 19.02.2004, 10:57:53.

P2150[3]	**Hysteresis frequency f_hys**			**Min:** 0.00	Level
	CStat: CUT	**Datatype:** Float	**Unit:** Hz	**Def:** 3.00	**3**
	P-Group: ALARMS	**Active:** Immediately	**QuickComm.:** No	**Max:** 10.00	

Defines hysteresis level applied for comparing frequency and speed to threshold as illustrated in the diagram below.

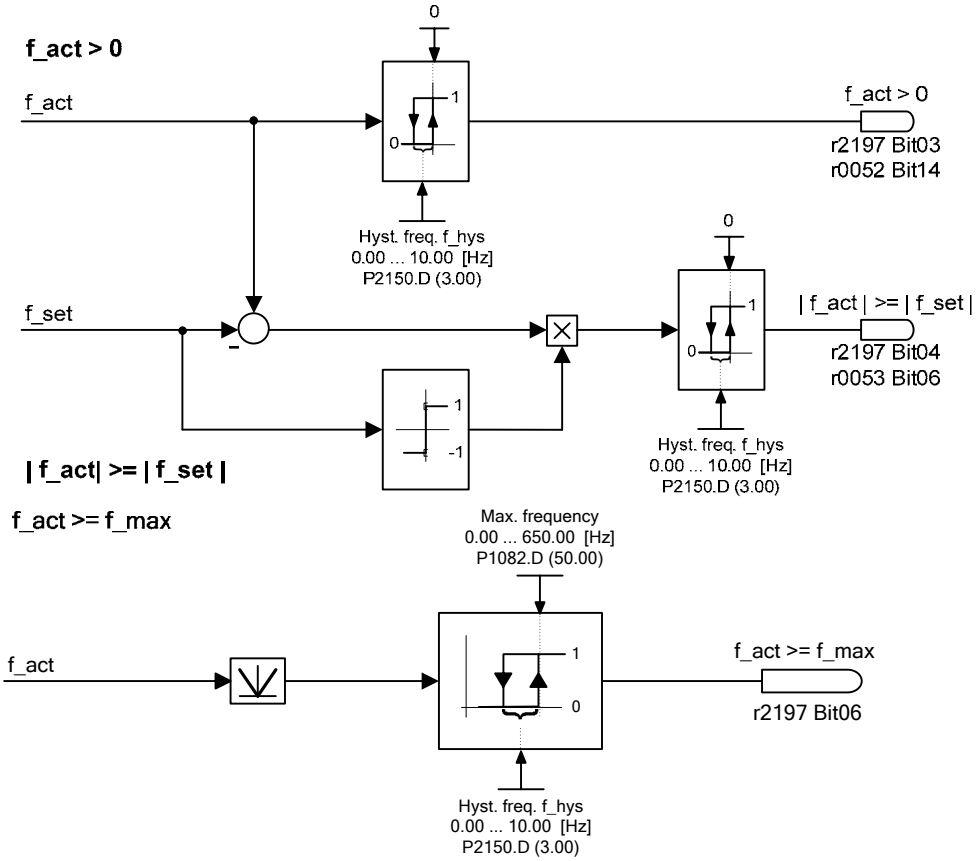

Index:

P2150[0] : 1st. Drive data set (DDS)
P2150[1] : 2nd. Drive data set (DDS)
P2150[2] : 3rd. Drive data set (DDS)

P2153[3]	**Time-constant frequency filter**			**Min:** 0	Level
	CStat: CUT	**Datatype:** U16	**Unit:** ms	**Def:** 5	**3**
	P-Group: ALARMS	**Active:** Immediately	**QuickComm.:** No	**Max:** 1000	

Specifies time constant of first-order frequency filter. The filtered frequency is then compared to the thresholds.

Index:

P2153[0] : 1st. Drive data set (DDS)
P2153[1] : 2nd. Drive data set (DDS)
P2153[2] : 3rd. Drive data set (DDS)

Details:

See diagram in P2155, P2157 and P2159

P2155[3]	**Threshold frequency f_1**			**Min:** 0.00	Level
	CStat: CUT	**Datatype:** Float	**Unit:** Hz	**Def:** 30.00	**3**
	P-Group: ALARMS	**Active:** Immediately	**QuickComm.:** No	**Max:** 650.00	

Sets a threshold for comparing actual frequency or frequency to threshold values f_1. This threshold controls status bits 4 and 5 in status word 2 (r0053).

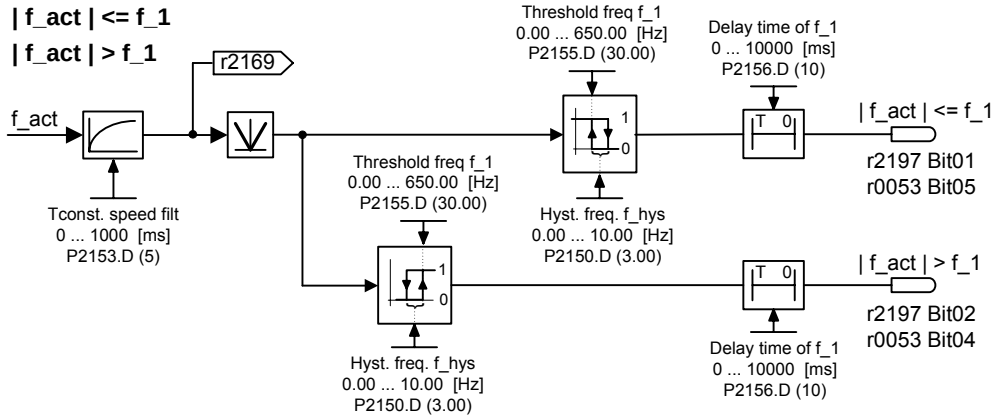

Index:

P2155[0] : 1st. Drive data set (DDS)
P2155[1] : 2nd. Drive data set (DDS)
P2155[2] : 3rd. Drive data set (DDS)

P2156[3]	**Delay time of threshold freq f_1**			**Min:** 0	Level
	CStat: CUT	**Datatype:** U16	**Unit:** ms	**Def:** 10	**3**
	P-Group: ALARMS	**Active:** Immediately	**QuickComm.:** No	**Max:** 10000	

Sets delay time prior to threshold frequency f_1 comparison (P2155).

Index:

P2156[0] : 1st. Drive data set (DDS)
P2156[1] : 2nd. Drive data set (DDS)
P2156[2] : 3rd. Drive data set (DDS)

Details:

See diagram in P2155 (threshold frequency f_1)

P2157[3]	**Threshold frequency f_2**			**Min:** 0.00	Level
	CStat: CUT	**Datatype:** Float	**Unit:** Hz	**Def:** 30.00	**3**
	P-Group: ALARMS	**Active:** Immediately	**QuickComm.:** No	**Max:** 650.00	

Threshold_2 for comparing frequency or frequency to thresholds as illustrated in the diagram below.

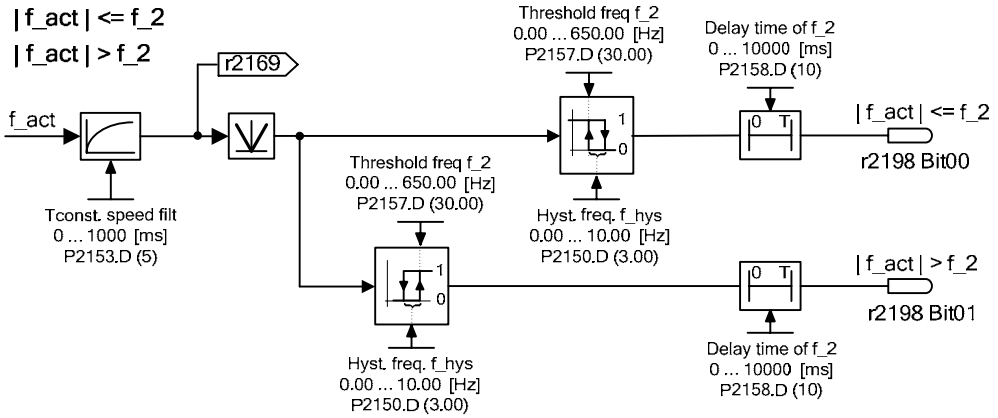

Index:

P2157[0] : 1st. Drive data set (DDS)
P2157[1] : 2nd. Drive data set (DDS)
P2157[2] : 3rd. Drive data set (DDS)

P2158[3]	**Delay time of threshold freq f_2**			**Min:** 0	Level
	CStat: CUT	**Datatype:** U16	**Unit:** ms	**Def:** 10	**3**
	P-Group: ALARMS	**Active:** Immediately	**QuickComm.:** No	**Max:** 10000	

When comparing frequency to threshold f_2 (P2157). This is the time delay before status bits are cleared.

Index:

P2158[0] : 1st. Drive data set (DDS)
P2158[1] : 2nd. Drive data set (DDS)
P2158[2] : 3rd. Drive data set (DDS)

Details:

See diagram in P2157 (threshold frequency f_2)

P2159[3]	Threshold frequency f_3			Min: 0.00	Level
	CStat: CUT	Datatype: Float	Unit: Hz	Def: 30.00	3
	P-Group: ALARMS	Active: Immediately	QuickComm.: No	Max: 650.00	

Threshold_3 for comparing frequency to thresholds.

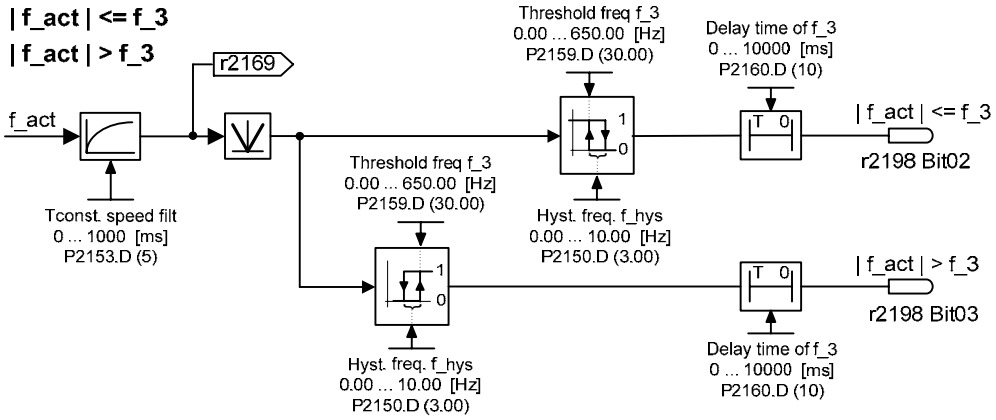

Index:

P2159[0] : 1st. Drive data set (DDS)
P2159[1] : 2nd. Drive data set (DDS)
P2159[2] : 3rd. Drive data set (DDS)

P2160[3]	Delay time of threshold freq f_3			Min: 0	Level
	CStat: CUT	Datatype: U16	Unit: ms	Def: 10	3
	P-Group: ALARMS	Active: Immediately	QuickComm.: No	Max: 10000	

When comparing frequency to threshold f_3 (P2159). This is the time delay before status bits are set.

Index:

P2160[0] : 1st. Drive data set (DDS)
P2160[1] : 2nd. Drive data set (DDS)
P2160[2] : 3rd. Drive data set (DDS)

Details:

See diagram in P2159 (threshold frequency f_3)

P2161[3]	Min. threshold for freq. setp.			Min: 0.00	Level
	CStat: CUT	Datatype: Float	Unit: Hz	Def: 3.00	3
	P-Group: ALARMS	Active: Immediately	QuickComm.: No	Max: 10.00	

Minimum threshold value for comparing frequency setpoint.

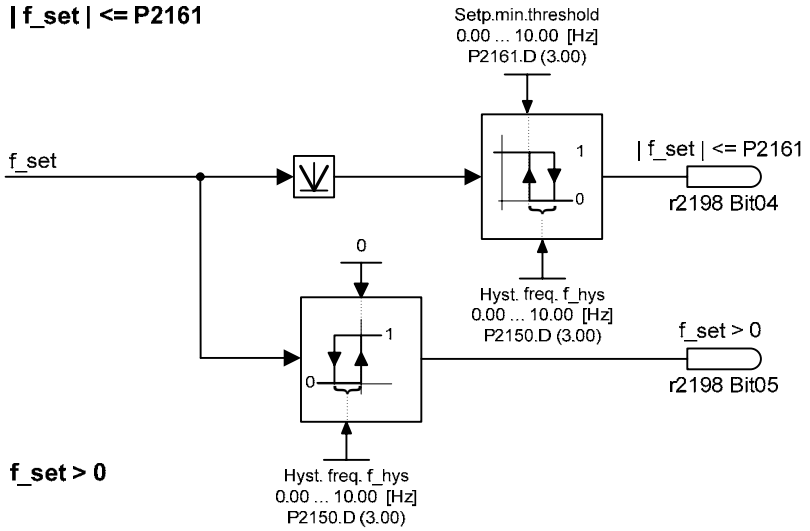

Index:

P2161[0] : 1st. Drive data set (DDS)
P2161[1] : 2nd. Drive data set (DDS)
P2161[2] : 3rd. Drive data set (DDS)

P2162[3]	**Hysteresis freq. for overfreq.**			**Min:** 0.00	Level
	CStat: CUT	**Datatype:** Float	**Unit:** Hz	**Def:** 20.00	**4**
	P-Group: ALARMS	**Active:** Immediately	**QuickComm.:** No	**Max:** 650.00	

Hysteresis frequency for overfrequency-detection as illustrated in the diagram below. NB Must be less than 50% Motor Rated Frequency This only relates to Vector operation e.g. MM440.

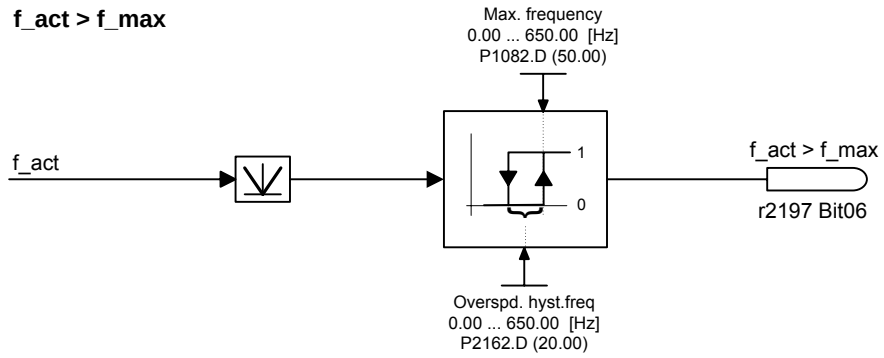

Index:

P2162[0] : 1st. Drive data set (DDS)
P2162[1] : 2nd. Drive data set (DDS)
P2162[2] : 3rd. Drive data set (DDS)

P2163[3]	**Entry freq. for perm. deviation**			**Min:** 0.00	Level
	CStat: CUT	**Datatype:** Float	**Unit:** Hz	**Def:** 3.00	**3**
	P-Group: ALARMS	**Active:** Immediately	**QuickComm.:** No	**Max:** 20.00	

Threshold for detecting frequency deviation from setpoint as illustrated in the diagram P2164.

Index:

P2163[0] : 1st. Drive data set (DDS)
P2163[1] : 2nd. Drive data set (DDS)
P2163[2] : 3rd. Drive data set (DDS)

P2164[3]	**Hysteresis frequency deviation**			**Min:** 0.00	Level
	CStat: CUT	**Datatype:** Float	**Unit:** Hz	**Def:** 3.00	**3**
	P-Group: ALARMS	**Active:** Immediately	**QuickComm.:** No	**Max:** 10.00	

Hysteresis frequency for detecting permitted deviation (from setpoint). This frequency controls bit 8 in status word 1 (r0052) and bit 7 in Monitoring word 1 (r2197).

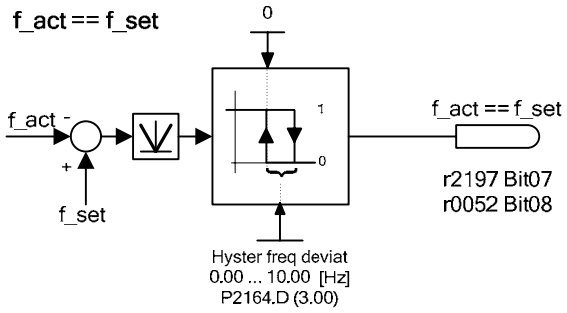

Index:

P2164[0] : 1st. Drive data set (DDS)
P2164[1] : 2nd. Drive data set (DDS)
P2164[2] : 3rd. Drive data set (DDS)

P2165[3]	**Delay time permitted deviation**			**Min:** 0	Level
	CStat: CUT	**Datatype:** U16	**Unit:** ms	**Def:** 10	**3**
	P-Group: ALARMS	**Active:** Immediately	**QuickComm.:** No	**Max:** 10000	

Delay time for detecting permitted deviation of frequency from setpoint.

Index:

P2165[0] : 1st. Drive data set (DDS)
P2165[1] : 2nd. Drive data set (DDS)
P2165[2] : 3rd. Drive data set (DDS)

Details:

See diagram in P2164.

P2166[3]	**Delay time ramp up completed**			**Min:** 0	Level
	CStat: CUT	**Datatype:** U16	**Unit:** ms	**Def:** 10	**3**
	P-Group: ALARMS	**Active:** Immediately	**QuickComm.:** No	**Max:** 10000	

Delay time for signal that indicates completion of ramp-up.

Index:

P2166[0] : 1st. Drive data set (DDS)
P2166[1] : 2nd. Drive data set (DDS)
P2166[2] : 3rd. Drive data set (DDS)

Details:

See diagram in P2174.

P2167[3]	**Switch-off frequency f_off**			**Min:** 0.00	Level
	CStat: CUT	**Datatype:** Float	**Unit:** Hz	**Def:** 1.00	**3**
	P-Group: ALARMS	**Active:** Immediately	**QuickComm.:** No	**Max:** 10.00	

Defines the threshold of the monitoring function |f_act| > P2167 (f_off).
P2167 influences following functions:

- If the actual frequency falls below this threshold and the time delay has expired, bit 1 in status word 2 (r0053) is reset.
- If a OFF1 or OFF3 was applied and bit 1 is reset the inverter will disable the pulse (OFF2).

Restriction:

- The monitoring function |f_act| > P2167 (f_off) is not updated and pulses are not disabled, if motor holding brake (MHB, P1215 = 1) is enabled.

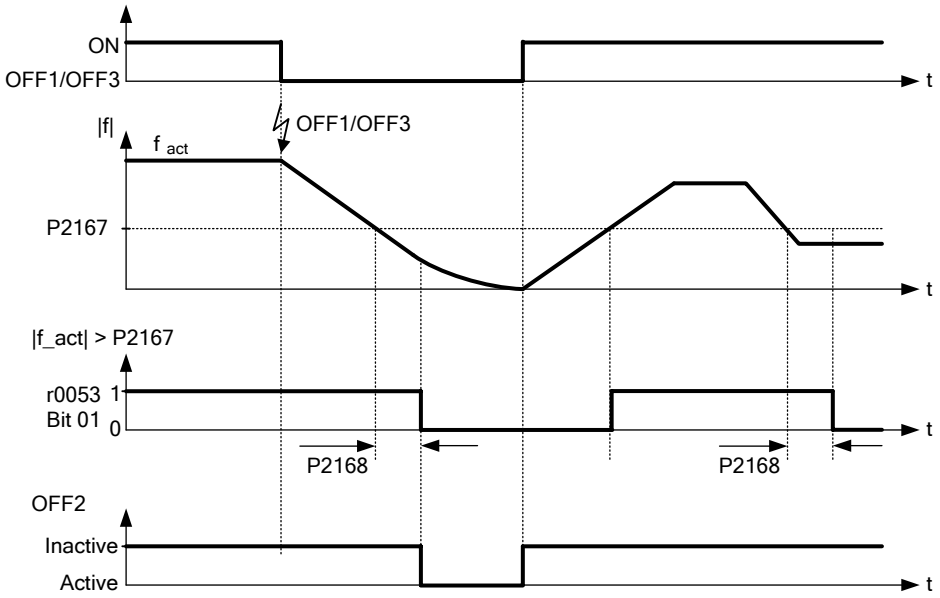

Index:

P2167[0] : 1st. Drive data set (DDS)
P2167[1] : 2nd. Drive data set (DDS)
P2167[2] : 3rd. Drive data set (DDS)

P2168[3]	**Delay time T_off**			**Min:** 0	Level
	CStat: CUT	**Datatype:** U16	**Unit:** ms	**Def:** 10	**3**
	P-Group: ALARMS	**Active:** Immediately	**QuickComm.:** No	**Max:** 10000	

Defines time for which the inverter may operate below switch-off frequency (P2167) before switch off occurs.

Index:

P2168[0] : 1st. Drive data set (DDS)
P2168[1] : 2nd. Drive data set (DDS)
P2168[2] : 3rd. Drive data set (DDS)

Dependency:

Active if holding brake (P1215) not parameterized.

Details:

See diagram in P2167 (switch-off frequency)

r2169	**CO: Act. filtered frequency 3**			**Min:** -	Level
		Datatype: Float	**Unit:** Hz	**Def:** -	**3**
	P-Group: ALARMS			**Max:** -	

Filtered frequency for monitoring behind first-order lowpass filter.

- |f_act| > f_1 (see P2155)
- |f_act| > f_2 (see P2157)
- |f_act| > f_3 (see P2159)

P2170[3]	**Threshold current I_thresh**			**Min:** 0.0	Level
	CStat: CUT	**Datatype:** Float	**Unit:** %	**Def:** 100.0	**3**
	P-Group: ALARMS	**Active:** Immediately	**QuickComm.:** No	**Max:** 400.0	

Defines threshold current in [%] relative to P0305 (rated motor current) to be used in comparisons of I_act and I_Thresh as illustrated in the diagram below.

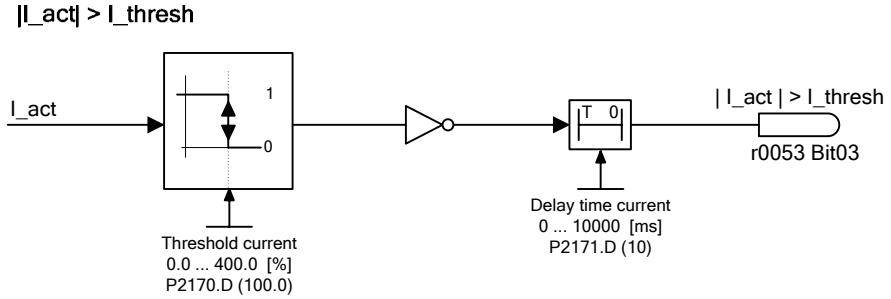

Index:

P2170[0] : 1st. Drive data set (DDS)
P2170[1] : 2nd. Drive data set (DDS)
P2170[2] : 3rd. Drive data set (DDS)

Note:

This threshold controls bit 3 in status word 2 (r0053).

P2171[3]	**Delay time current**			**Min:** 0	Level
	CStat: CUT	**Datatype:** U16	**Unit:** ms	**Def:** 10	**3**
	P-Group: ALARMS	**Active:** Immediately	**QuickComm.:** No	**Max:** 10000	

Defines delay time prior to activation of current comparison.

Index:

P2171[0] : 1st. Drive data set (DDS)
P2171[1] : 2nd. Drive data set (DDS)
P2171[2] : 3rd. Drive data set (DDS)

Details:

See diagram in P2170 (threshold current I_thresh)

P2172[3]	**Threshold DC-link voltage**			**Min:** 0	Level
	CStat: CUT	**Datatype:** U16	**Unit:** V	**Def:** 800	**3**
	P-Group: ALARMS	**Active:** Immediately	**QuickComm.:** No	**Max:** 2000	

Defines DC link voltage to be compared to actual voltage as illustrated in the diagram below.

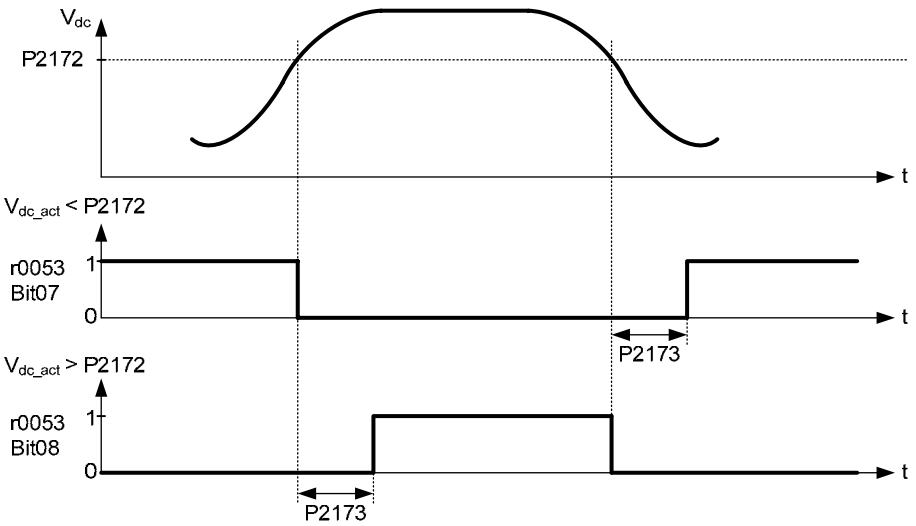

Index:

P2172[0] : 1st. Drive data set (DDS)
P2172[1] : 2nd. Drive data set (DDS)
P2172[2] : 3rd. Drive data set (DDS)

Note:

This voltage controls bits 7 and 8 in status word 2 (r0053).
Changing this threshold does not change the threshold of F0002 (Overvoltage).

P2173[3]	**Delay time DC-link voltage**			**Min:** 0	Level
	CStat: CUT	**Datatype:** U16	**Unit:** ms	**Def:** 10	**3**
	P-Group: ALARMS	**Active:** Immediately	**QuickComm.:** No	**Max:** 10000	

Defines delay time prior to activation of threshold comparison.

Index:

P2173[0] : 1st. Drive data set (DDS)
P2173[1] : 2nd. Drive data set (DDS)
P2173[2] : 3rd. Drive data set (DDS)

Details:

See diagram in P2172 (threshold DC-link voltage)

P2174[3]	**Torque threshold M_thresh**			**Min:** 0.00	Level
	CStat: CUT	**Datatype:** Float	**Unit:** Nm	**Def:** 5.13	**3**
	P-Group: ALARMS	**Active:** Immediately	**QuickComm.:** No	**Max:** 99999.00	

Defines torque threshold for comparing actual torque.

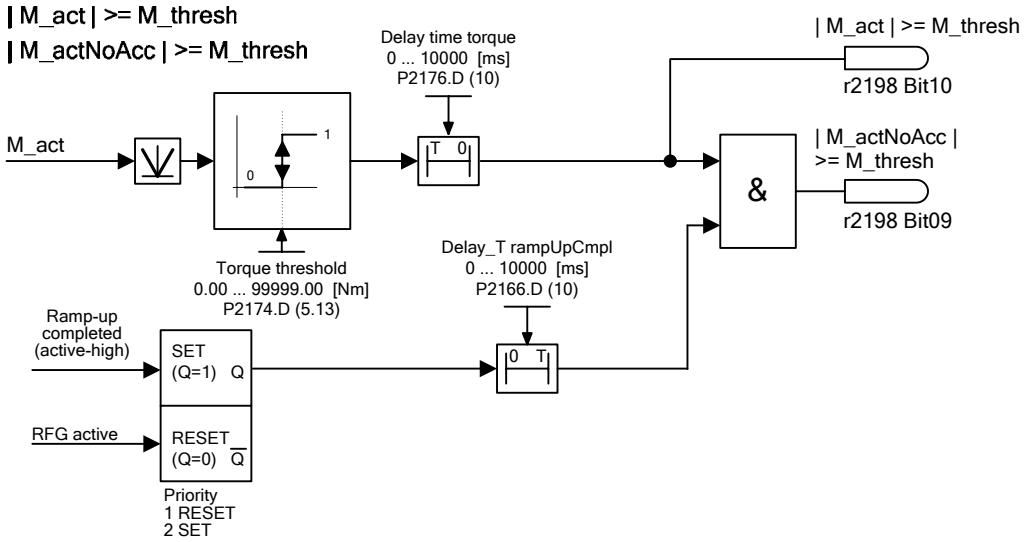

Index:

P2174[0] : 1st. Drive data set (DDS)
P2174[1] : 2nd. Drive data set (DDS)
P2174[2] : 3rd. Drive data set (DDS)

P2176[3]	**Delay time for torque threshold**			**Min:** 0	Level
	CStat: CUT	**Datatype:** U16	**Unit:** ms	**Def:** 10	**3**
	P-Group: ALARMS	**Active:** Immediately	**QuickComm.:** No	**Max:** 10000	

Delay time for comparing actual torque to threshold.

Index:

P2176[0] : 1st. Drive data set (DDS)
P2176[1] : 2nd. Drive data set (DDS)
P2176[2] : 3rd. Drive data set (DDS)

P2178[3]	**Delay time for motor pulled out**			**Min:** 0	Level
	CStat: CUT	**Datatype:** U16	**Unit:** ms	**Def:** 10	**3**
	P-Group: ALARMS	**Active:** Immediately	**QuickComm.:** No	**Max:** 10000	

Delay time for identification that motor is pulled out. This only relates to Vector operation e.g. MM440

Index:

P2178[0] : 1st. Drive data set (DDS)
P2178[1] : 2nd. Drive data set (DDS)
P2178[2] : 3rd. Drive data set (DDS)

P2179	**Current limit for no load ident.**			**Min:** 0.0	Level
	CStat: CUT	**Datatype:** Float	**Unit:** %	**Def:** 3.0	**3**
	P-Group: ALARMS	**Active:** Immediately	**QuickComm.:** No	**Max:** 10.0	

Threshold current for A0922 (load missing) in [%] relative to P0305 (rated motor current) as illustrated in the diagram below.

Load missing

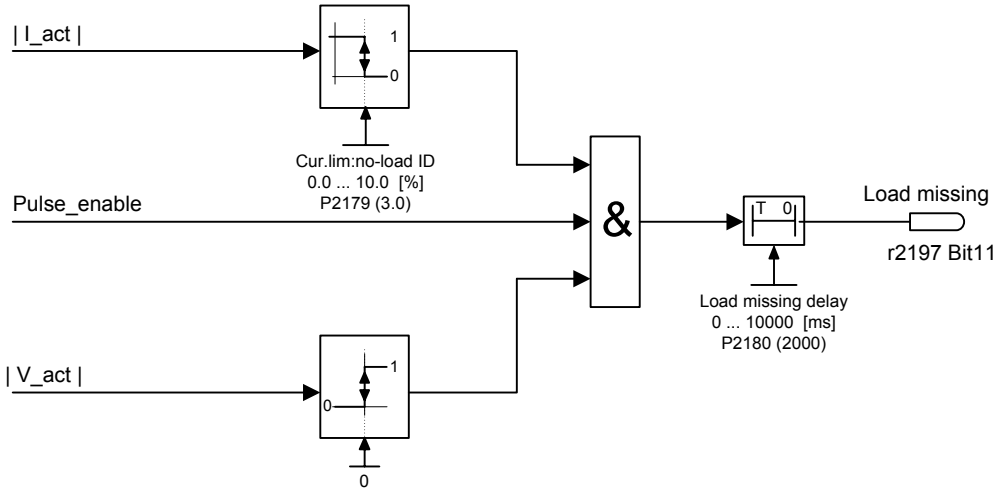

Note:

- It may be that the motor is not connected (load missing) or a phase could be missing.
- If a motor setpoint cannot be entered and the current limit (P2179) is not exceeded, Alarm A0922 (no load applied) is issued when delay time (P2180) expires.

P2180	**Delay time for load missing**			**Min:** 0	Level
	CStat: CUT	**Datatype:** U16	**Unit:** ms	**Def:** 2000	**3**
	P-Group: ALARMS	**Active:** Immediately	**QuickComm.:** No	**Max:** 10000	

Delay time to identify that the current is less than the threshold defined in P2179.

Details:

See diagram in P2179 (current limit for no load identification).

3.35 Load torque monitoring

P2181[3]	Belt failure detection mode			Min: 0	Level
	CStat: CT	Datatype: U16	Unit: -	Def: 0	3
	P-Group: ALARMS	Active: first confirm	QuickComm.: No	Max: 6	

Parameter P2181 activates or de-activates the load torque monitoring and defines the response to a load torque fault.

Using the load torque monitoring, it is possible to detect a mechanical failure or an overload condition of the mechanical transmission line, e.g. a broken drive belt or a stalled conveyor belt. In this case, the actual torque/frequency actual value is compared to a programmed envelope characteristic (refer to P2182 - P2190). If the actual torque/frequency actual value lies above or below the envelope curve, then after the delay time P2192 expires, as a function of P2181, alarm A0952 is output or the drive inverter is tripped with fault message F0452.

Possible Settings:

0 Belt failure detection disabled
1 Warning: Low torque / frequency
2 Warning: High torque / frequency
3 Warning: High / low torque / frequency
4 Trip: Low torque / frequency
5 Trip: High torque / frequency
6 Trip: High / low torque / frequency

Index:

P2181[0] : 1st. Drive data set (DDS)
P2181[1] : 2nd. Drive data set (DDS)
P2181[2] : 3rd. Drive data set (DDS)

P2182[3]	**Belt threshold frequency 1**			**Min:** 0.00	Level
	CStat: CUT	**Datatype:** Float	**Unit:** Hz	**Def:** 5.00	**3**
	P-Group: ALARMS	**Active:** Immediately	**QuickComm.:** No	**Max:** 650.00	

Sets a frequency threshold 1 for comparing actual torque to torque the envelope for belt failure detection.

The frequency torque envelope is defined by 9 parameters - 3 are frequency parameters (P2182 - P2184), and the other 6 define the low and high torque limits (P2185 - P2190) for each frequency (see diagram below).

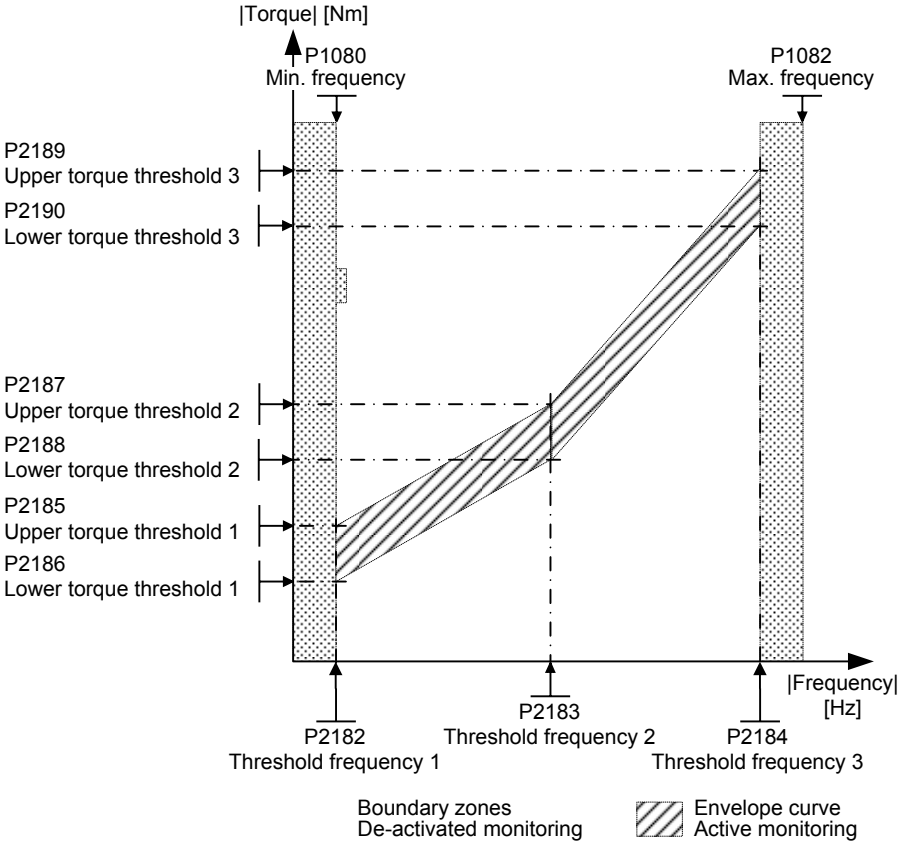

The allowed frequency/torque region is defined by the shaded area. When the torque falls outside the area shown, a trip or warning occurs (see parameter P2181).

Index:

P2182[0] : 1st. Drive data set (DDS)
P2182[1] : 2nd. Drive data set (DDS)
P2182[2] : 3rd. Drive data set (DDS)

Note:

- The load torque monitoring function is not active below the frequency defined in P2182 and above the frequency defined in P2184.
- The current and torque limits of the drive inverter and motor still apply over the complete frequency range.
- The drive inverter output frequency is defined using Parameter P1080 and P1082. These limits should be carefully observed for the load torque monitoring frequencies.

P2183[3]	**Belt threshold frequency 2**			**Min:** 0.00	Level
	CStat: CUT	**Datatype:** Float	**Unit:** Hz	**Def:** 30.00	**3**
	P-Group: ALARMS	**Active:** Immediately	**QuickComm.:** No	**Max:** 650.00	

Sets a threshold F2 for comparing actual torque to torque the envelope for belt failure detection.

Index:

P2183[0] : 1st. Drive data set (DDS)
P2183[1] : 2nd. Drive data set (DDS)
P2183[2] : 3rd. Drive data set (DDS)

Details:

See P2182 (belt threshold frequency 1).

P2184[3]	**Belt threshold frequency 3**			**Min:** 0.00	Level
	CStat: CUT	**Datatype:** Float	**Unit:** Hz	**Def:** 50.00	**3**
	P-Group: ALARMS	**Active:** Immediately	**QuickComm.:** No	**Max:** 650.00	

Sets a threshold F3 for comparing actual torque to torque the envelope for belt failure detection.

Index:

P2184[0] : 1st. Drive data set (DDS)
P2184[1] : 2nd. Drive data set (DDS)
P2184[2] : 3rd. Drive data set (DDS)

Details:

See P2182 (belt threshold frequency 1).

P2185[3]	**Upper torque threshold 1**			**Min:** 0.0	Level
	CStat: CUT	**Datatype:** Float	**Unit:** Nm	**Def:** 99999.0	**3**
	P-Group: ALARMS	**Active:** Immediately	**QuickComm.:** No	**Max:** 99999.0	

Upper limit threshold value 1 for comparing actual torque.

Index:

P2185[0] : 1st. Drive data set (DDS)
P2185[1] : 2nd. Drive data set (DDS)
P2185[2] : 3rd. Drive data set (DDS)

Details:

See P2182 (belt threshold frequency 1).

P2186[3]	**Lower torque threshold 1**			**Min:** 0.0	Level
	CStat: CUT	**Datatype:** Float	**Unit:** Nm	**Def:** 0.0	**3**
	P-Group: ALARMS	**Active:** Immediately	**QuickComm.:** No	**Max:** 99999.0	

Lower limit threshold value 1 for comparing actual torque.

Index:

P2186[0] : 1st. Drive data set (DDS)
P2186[1] : 2nd. Drive data set (DDS)
P2186[2] : 3rd. Drive data set (DDS)

Details:

See P2182 (belt threshold frequency 1).

P2187[3]	**Upper torque threshold 2**			**Min:** 0.0	Level
	CStat: CUT	**Datatype:** Float	**Unit:** Nm	**Def:** 99999.0	**3**
	P-Group: ALARMS	**Active:** Immediately	**QuickComm.:** No	**Max:** 99999.0	

Upper limit threshold value 2 for comparing actual torque.

Index:

P2187[0] : 1st. Drive data set (DDS)
P2187[1] : 2nd. Drive data set (DDS)
P2187[2] : 3rd. Drive data set (DDS)

Details:

See P2182 (belt threshold frequency 1).

P2188[3]	**Lower torque threshold 2**			**Min:** 0.0	Level
	CStat: CUT	**Datatype:** Float	**Unit:** Nm	**Def:** 0.0	**3**
	P-Group: ALARMS	**Active:** Immediately	**QuickComm.:** No	**Max:** 99999.0	

Lower limit threshold value 2 for comparing actual torque.

Index:

P2188[0] : 1st. Drive data set (DDS)
P2188[1] : 2nd. Drive data set (DDS)
P2188[2] : 3rd. Drive data set (DDS)

Details:

See P2182 (belt threshold frequency 1).

P2189[3]	**Upper torque threshold 3**			**Min:** 0.0	Level
	CStat: CUT	**Datatype:** Float	**Unit:** Nm	**Def:** 99999.0	**3**
	P-Group: ALARMS	**Active:** Immediately	**QuickComm.:** No	**Max:** 99999.0	

Upper limit threshold value 3 for comparing actual torque.

Index:

P2189[0] : 1st. Drive data set (DDS)
P2189[1] : 2nd. Drive data set (DDS)
P2189[2] : 3rd. Drive data set (DDS)

Details:

See P2182 (belt threshold frequency 1).

P2190[3]	**Lower torque threshold 3**			**Min:** 0.0	Level
	CStat: CUT	**Datatype:** Float	**Unit:** Nm	**Def:** 0.0	**3**
	P-Group: ALARMS	**Active:** Immediately	**QuickComm.:** No	**Max:** 99999.0	

Lower limit threshold value 3 for comparing actual torque.

Index:

P2190[0] : 1st. Drive data set (DDS)
P2190[1] : 2nd. Drive data set (DDS)
P2190[2] : 3rd. Drive data set (DDS)

Details:

See P2182 (belt threshold frequency 1).

P2192[3]	**Time delay for belt failure**			**Min:** 0	Level
	CStat: CUT	**Datatype:** U16	**Unit:** s	**Def:** 10	**3**
	P-Group: ALARMS	**Active:** Immediately	**QuickComm.:** No	**Max:** 65	

P2192 defines a delay before warning/trip becomes active. It is used to eliminate events caused by transient conditions. It is used for both methods of fault detection.

Index:

P2192[0] : 1st. Drive data set (DDS)
P2192[1] : 2nd. Drive data set (DDS)
P2192[2] : 3rd. Drive data set (DDS)

r2197	**CO/BO: Monitoring word 1**			**Min:** -	Level
		Datatype: U16	**Unit:** -	**Def:** -	**3**
	P-Group: ALARMS			**Max:** -	

Monitoring word 1 which indicates the state of monitor functions. Each bit represents one monitor function.

Bitfields:

```
Bit00   f_act <=  P1080 (f_min)                  0  NO        1  YES
Bit01   f_act <=  P2155 (f_1)                    0  NO        1  YES
Bit02   f_act >   P2155 (f_1)                    0  NO        1  YES
Bit03   f_act >   zero                           0  NO        1  YES

Bit04   f_act >=  setp. (f_set)                  0  NO        1  YES
Bit05   f_act >   P2167 (f_off)                  0  NO        1  YES
Bit06   f_act >=  P1082 (f_max)                  0  NO        1  YES
Bit07   f_act ==  setp. (f_set)                  0  NO        1  YES

Bit08   Act. current r0068 >  P2170              0  NO        1  YES
Bit09   Act. unfilt. Vdc   <  P2172              0  NO        1  YES
Bit10   Act. unfilt. Vdc   >  P2172              0  NO        1  YES
Bit11   Load missing                             0  NO        1  YES
```

r2198	**CO/BO: Monitoring word 2**			**Min:** -	Level
		Datatype: U16	**Unit:** -	**Def:** -	**3**
	P-Group: ALARMS			**Max:** -	

Monitoring word 2 which indicates the state of monitor functions. Each bit represents one monitor function.

Bitfields:

```
Bit00   |f_act| <= P2157 (f_2)                   0  NO        1  YES
Bit01   |f_act| >  P2157 (f_2)                   0  NO        1  YES
Bit02   |f_act| <= P2159 (f_3)                   0  NO        1  YES
Bit03   |f_act| >  P2159 (f_3)                   0  NO        1  YES

Bit04   |f_set| <  P2161 (f_min_set)             0  NO        1  YES
Bit05   f_set > 0                                0  NO        1  YES
Bit06   reserved
Bit07   reserved

Bit08   | I_act r0068 | < P2170                 0  NO        1  YES
Bit09   | m_act | >= P2174 & setpoint reached    0  NO        1  YES
Bit10   | m_act | >= P2174                       0  NO        1  YES
Bit11   Belt failure warning                     0  NO        1  YES
Bit12   Belt failure trip                        0  NO        1  YES
```

3.36 Technology controller (PID controller)

P2200[3]	BI: Enable PID controller			Min: 0:0	Level
	CStat: CUT	Datatype: U32	Unit: -	Def: 0:0	2
	P-Group: TECH	Active: first confirm	QuickComm.: No	Max: 4000:0	

Allows user to enable/disable the PID controller.

P2200 settings :

0 : PID controller de-activated
1 : PID controller permanently activated
BICO parameters : PID controller event-controlled, de-activated/activated

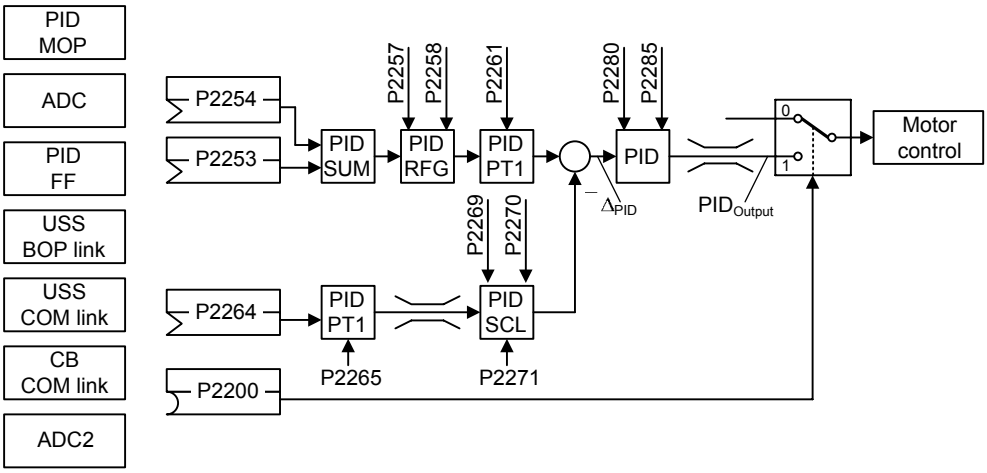

Index:

P2200[0] : 1st. Command data set (CDS)
P2200[1] : 2nd. Command data set (CDS)
P2200[2] : 3rd. Command data set (CDS)

Common Settings:

Parameter	Parameter text	Setting	Meaning
P2200	BI: Enable PID controller	0	PID controller de-activated
		1.0	PID controller always active
		722.x	Digital input x
		BICO	BICO parameter
P2253	CI: PID setpoint	2224	Fixed PID setpoint (PID-FF)
		2250	PID-MOP
		755.0	Analog input 1
		2015.1	USS on BOP link
		2019.1	USS on COM link
		2050.1	CB on COM link
P2264	CI: PID feedback	755.0	Analog input 1
		755.1	Analog input 2

Dependency:

Setting 1 automatically disables normal ramp times set in P1120 and P1121 and the normal frequency setpoints.

Following an OFF1 or OFF3 command, however, the inverter frequency will ramp down to zero using the ramp time set in P1121 (P1135 for OFF3).

Note:

The PID setpoint source is selected using P2253. The PID setpoint and the PID feedback signal are interpreted as [%] values (not [Hz]). The output of the PID controller is displayed as [%] and then normalized into [Hz] through P2000 (reference frequency) when PID is enabled.

In level 3, the PID controller source enable can also come from the digital inputs in settings 722.0 to 722.5 for DIN1 to DIN6 or from any other BiCo source.

The minimum and maximum motor frequencies (P1080 and P1082) as well as the skip frequencies (P1091 to P1094) remain active on the inverter output. However, enabling skip frequencies with PID control can produce instabilities. Changes in parameter P2200 are only activated on the next ON command.

P2201[3]	**Fixed PID setpoint 1**			**Min:** -200.00	Level
	CStat: CUT	**Datatype:** Float	**Unit:** %	**Def:** 0.00	**3**
	P-Group: TECH	**Active:** Immediately	**QuickComm.:** No	**Max:** 200.00	

Defines Fixed PID Setpoint 1

There are three options available for selection of the PID fixed setpoints:
1. Direct selection
2. Direct selection + ON command
3. Binary coded selection + ON command

1. Direct selection (P0701 - P0706 = 15):
   - In this mode of operation, 1 digital input selects one PID fixed setpoint.
   - If several inputs are active together, the selected setpoints are summed.
   - E.g.: PID-FF1 + PID-FF2 + PID-FF3 + PID-FF4 + PID-FF5 + PID-FF6.

2. Direct selection + ON command (P0701 - P0706 = 16):
   - Description as for 1), except that this type of selection issues an ON command concurrent with any setpoint selection.
   - If several inputs are active together, the selected setpoints are summed.
   - E.g.: PID-FF1 + PID-FF2 + PID-FF3 + PID-FF4 + PID-FF5 + PID-FF6.

3. Binary coded selection + ON command (P0701 - P0706 = 17):
   - Using this method to select the fixed PID setpoint (FF-PID) allows you to choose up to 16 different PID setpoints.
   - The setpoints are selected according to the following table:

Index:

P2201[0] : 1st. Drive data set (DDS)
P2201[1] : 2nd. Drive data set (DDS)
P2201[2] : 3rd. Drive data set (DDS)

Example:

Binary coded selection :

		DIN4	**DIN3**	**DIN2**	**DIN1**
0 %	PID - FF0	0	0	0	0
P2201	PID - FF1	0	0	0	**1**
P2202	PID - FF2	0	0	**1**	0
P2203	PID - FF3	0	0	**1**	**1**
P2204	PID - FF4	0	**1**	0	0
P2205	PID - FF5	0	**1**	0	**1**
P2206	PID - FF6	0	**1**	**1**	0
P2207	PID - FF7	0	**1**	**1**	**1**
P2208	PID - FF8	**1**	0	0	0
P2209	PID - FF9	**1**	0	0	**1**
P2210	PID - FF10	**1**	0	**1**	0
P2211	PID - FF11	**1**	0	**1**	**1**
P2212	PID - FF12	**1**	**1**	0	0
P2213	PID - FF13	**1**	**1**	0	**1**
P2214	PID - FF14	**1**	**1**	**1**	0
P2215	PID - FF15	**1**	**1**	**1**	**1**

Direct selection of PID-FF1 P2201 via DIN 1:

P0701 = 15
or
P0701 = 99, P2220 = 722.0, P2216 = 1

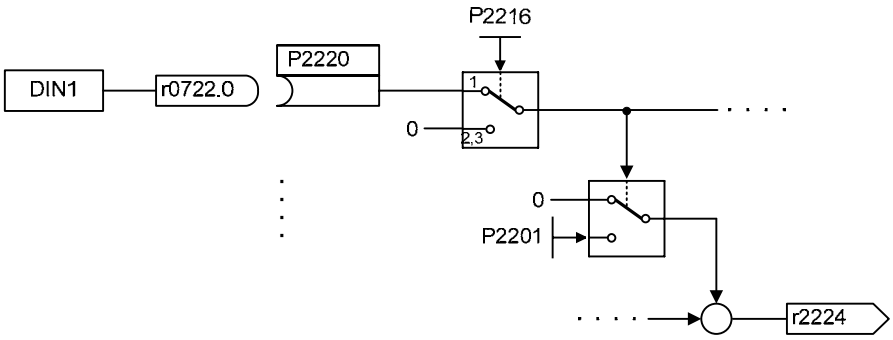

Dependency:
P2200 = 1 required in user access level 2 to enable setpoint source.

Note:
You may mix different types of frequencies; however, remember that they will be summed if selected together.

P2201 = 100 % corresponds to 4000 hex

P2202[3]	Fixed PID setpoint 2				Min: -200.00	Level
	CStat: CUT	Datatype: Float	Unit: %		Def: 10.00	3
	P-Group: TECH	Active: Immediately	QuickComm.: No		Max: 200.00	

Defines Fixed PID Setpoint 2

Index:
P2202[0] : 1st. Drive data set (DDS)
P2202[1] : 2nd. Drive data set (DDS)
P2202[2] : 3rd. Drive data set (DDS)

Details:
See P2201 (Fixed PID Setpoint 1).

P2203[3]	Fixed PID setpoint 3				Min: -200.00	Level
	CStat: CUT	Datatype: Float	Unit: %		Def: 20.00	3
	P-Group: TECH	Active: Immediately	QuickComm.: No		Max: 200.00	

Defines Fixed PID Setpoint 3

Index:
P2203[0] : 1st. Drive data set (DDS)
P2203[1] : 2nd. Drive data set (DDS)
P2203[2] : 3rd. Drive data set (DDS)

Details:
See P2201 fixed PID setpoint 1 (FF-PID 1).

P2204[3]	Fixed PID setpoint 4				Min: -200.00	Level
	CStat: CUT	Datatype: Float	Unit: %		Def: 30.00	3
	P-Group: TECH	Active: Immediately	QuickComm.: No		Max: 200.00	

Defines Fixed PID Setpoint 4

Index:
P2204[0] : 1st. Drive data set (DDS)
P2204[1] : 2nd. Drive data set (DDS)
P2204[2] : 3rd. Drive data set (DDS)

Details:
See P2201 (Fixed PID Setpoint 1).

P2205[3]	Fixed PID setpoint 5				Min: -200.00	Level
	CStat: CUT	Datatype: Float	Unit: %		Def: 40.00	3
	P-Group: TECH	Active: Immediately	QuickComm.: No		Max: 200.00	

Defines Fixed PID Setpoint 5

Index:
P2205[0] : 1st. Drive data set (DDS)
P2205[1] : 2nd. Drive data set (DDS)
P2205[2] : 3rd. Drive data set (DDS)

Details:
See P2201 (Fixed PID Setpoint 1).

P2206[3]	**Fixed PID setpoint 6**				**Min:**	-200.00	Level
	CStat:	CUT	**Datatype:** Float	**Unit:** %	**Def:**	50.00	**3**
	P-Group:	TECH	**Active:** Immediately	**QuickComm.:** No	**Max:**	200.00	

Defines Fixed PID Setpoint 6

Index:

P2206[0] : 1st. Drive data set (DDS)
P2206[1] : 2nd. Drive data set (DDS)
P2206[2] : 3rd. Drive data set (DDS)

Details:

See P2201 (Fixed PID Setpoint 1).

P2207[3]	**Fixed PID setpoint 7**				**Min:**	-200.00	Level
	CStat:	CUT	**Datatype:** Float	**Unit:** %	**Def:**	60.00	**3**
	P-Group:	TECH	**Active:** Immediately	**QuickComm.:** No	**Max:**	200.00	

Defines Fixed PID Setpoint 7

Index:

P2207[0] : 1st. Drive data set (DDS)
P2207[1] : 2nd. Drive data set (DDS)
P2207[2] : 3rd. Drive data set (DDS)

Details:

See P2201 (Fixed PID Setpoint 1).

P2208[3]	**Fixed PID setpoint 8**				**Min:**	-200.00	Level
	CStat:	CUT	**Datatype:** Float	**Unit:** %	**Def:**	70.00	**3**
	P-Group:	TECH	**Active:** Immediately	**QuickComm.:** No	**Max:**	200.00	

Defines Fixed PID Setpoint 8

Index:

P2208[0] : 1st. Drive data set (DDS)
P2208[1] : 2nd. Drive data set (DDS)
P2208[2] : 3rd. Drive data set (DDS)

Details:

See P2201 (Fixed PID Setpoint 1).

P2209[3]	**Fixed PID setpoint 9**				**Min:**	-200.00	Level
	CStat:	CUT	**Datatype:** Float	**Unit:** %	**Def:**	80.00	**3**
	P-Group:	TECH	**Active:** Immediately	**QuickComm.:** No	**Max:**	200.00	

Defines Fixed PID Setpoint 9

Index:

P2209[0] : 1st. Drive data set (DDS)
P2209[1] : 2nd. Drive data set (DDS)
P2209[2] : 3rd. Drive data set (DDS)

Details:

See P2201 (Fixed PID Setpoint 1).

P2210[3]	**Fixed PID setpoint 10**				**Min:**	-200.00	Level
	CStat:	CUT	**Datatype:** Float	**Unit:** %	**Def:**	90.00	**3**
	P-Group:	TECH	**Active:** Immediately	**QuickComm.:** No	**Max:**	200.00	

Defines Fixed PID Setpoint 10

Index:

P2210[0] : 1st. Drive data set (DDS)
P2210[1] : 2nd. Drive data set (DDS)
P2210[2] : 3rd. Drive data set (DDS)

Details:

See P2201 (Fixed PID Setpoint 1).

P2211[3]	**Fixed PID setpoint 11**				**Min:**	-200.00	Level
	CStat:	CUT	**Datatype:** Float	**Unit:** %	**Def:**	100.00	**3**
	P-Group:	TECH	**Active:** Immediately	**QuickComm.:** No	**Max:**	200.00	

Defines Fixed PID Setpoint 11

Index:

P2211[0] : 1st. Drive data set (DDS)
P2211[1] : 2nd. Drive data set (DDS)
P2211[2] : 3rd. Drive data set (DDS)

Details:

See P2201 (Fixed PID Setpoint 1).

P2212[3]	Fixed PID setpoint 12			Min: -200.00	Level
	CStat: CUT	Datatype: Float	Unit: %	Def: 110.00	3
	P-Group: TECH	Active: Immediately	QuickComm.: No	Max: 200.00	

Defines Fixed PID Setpoint 12

Index:

P2212[0] : 1st. Drive data set (DDS)
P2212[1] : 2nd. Drive data set (DDS)
P2212[2] : 3rd. Drive data set (DDS)

Details:

See P2201 (Fixed PID Setpoint 1).

P2213[3]	Fixed PID setpoint 13			Min: -200.00	Level
	CStat: CUT	Datatype: Float	Unit: %	Def: 120.00	3
	P-Group: TECH	Active: Immediately	QuickComm.: No	Max: 200.00	

Defines Fixed PID Setpoint 13

Index:

P2213[0] : 1st. Drive data set (DDS)
P2213[1] : 2nd. Drive data set (DDS)
P2213[2] : 3rd. Drive data set (DDS)

Details:

See P2201 (Fixed PID Setpoint 1).

P2214[3]	Fixed PID setpoint 14			Min: -200.00	Level
	CStat: CUT	Datatype: Float	Unit: %	Def: 130.00	3
	P-Group: TECH	Active: Immediately	QuickComm.: No	Max: 200.00	

Defines Fixed PID Setpoint 14

Index:

P2214[0] : 1st. Drive data set (DDS)
P2214[1] : 2nd. Drive data set (DDS)
P2214[2] : 3rd. Drive data set (DDS)

Details:

See P2201 (Fixed PID Setpoint 1).

P2215[3]	Fixed PID setpoint 15			Min: -200.00	Level
	CStat: CUT	Datatype: Float	Unit: %	Def: 130.00	3
	P-Group: TECH	Active: Immediately	QuickComm.: No	Max: 200.00	

Defines Fixed PID Setpoint 15

Index:

P2215[0] : 1st. Drive data set (DDS)
P2215[1] : 2nd. Drive data set (DDS)
P2215[2] : 3rd. Drive data set (DDS)

Details:

See P2201 (Fixed PID Setpoint 1).

P2216[3]	Fixed PID setpoint mode - Bit 0			Min: 1	Level
	CStat: CT	Datatype: U16	Unit: -	Def: 1	3
	P-Group: TECH	Active: first confirm	QuickComm.: No	Max: 3	

Fixed frequencies for PID setpoint can be selected in three different modes. Parameter P2216 defines the mode of selection Bit 0.

Possible Settings:

1 Direct selection
2 Direct selection + ON command
3 Binary coded selection + ON command

Index:

P2216[0] : 1st. Command data set (CDS)
P2216[1] : 2nd. Command data set (CDS)
P2216[2] : 3rd. Command data set (CDS)

P2217[3]	Fixed PID setpoint mode - Bit 1			Min: 1	Level
	CStat: CT	Datatype: U16	Unit: -	Def: 1	3
	P-Group: TECH	Active: first confirm	QuickComm.: No	Max: 3	

BCD or direct selection Bit 1 for PID setpoint.

Possible Settings:

1 Direct selection
2 Direct selection + ON command
3 Binary coded selection + ON command

Index:

P2217[0] : 1st. Command data set (CDS)
P2217[1] : 2nd. Command data set (CDS)
P2217[2] : 3rd. Command data set (CDS)

P2218[3]	Fixed PID setpoint mode - Bit 2			Min: 1	Level
	CStat: CT	Datatype: U16	Unit: -	Def: 1	3
	P-Group: TECH	Active: first confirm	QuickComm.: No	Max: 3	

BCD or direct selection Bit 2 for PID setpoint.

Possible Settings:

1 Direct selection
2 Direct selection + ON command
3 Binary coded selection + ON command

Index:

P2218[0] : 1st. Command data set (CDS)
P2218[1] : 2nd. Command data set (CDS)
P2218[2] : 3rd. Command data set (CDS)

P2219[3]	Fixed PID setpoint mode - Bit 3			Min: 1	Level
	CStat: CT	Datatype: U16	Unit: -	Def: 1	3
	P-Group: TECH	Active: first confirm	QuickComm.: No	Max: 3	

BCD or direct selection Bit 3 for PID setpoint.

Possible Settings:

1 Direct selection
2 Direct selection + ON command
3 Binary coded selection + ON command

Index:

P2219[0] : 1st. Command data set (CDS)
P2219[1] : 2nd. Command data set (CDS)
P2219[2] : 3rd. Command data set (CDS)

P2220[3]	BI: Fixed PID setp. select Bit 0			Min: 0:0	Level
	CStat: CT	Datatype: U32	Unit: -	Def: 0:0	3
	P-Group: COMMANDS	Active: first confirm	QuickComm.: No	Max: 4000:0	

Defines command source of fixed PID setpoint selection Bit 0

Index:

P2220[0] : 1st. Command data set (CDS)
P2220[1] : 2nd. Command data set (CDS)
P2220[2] : 3rd. Command data set (CDS)

Common Settings:

722.0 = Digital input 1 (requires P0701 to be set to 99, BICO)
722.1 = Digital input 2 (requires P0702 to be set to 99, BICO)
722.2 = Digital input 3 (requires P0703 to be set to 99, BICO)
722.3 = Digital input 4 (requires P0704 to be set to 99, BICO)
722.4 = Digital input 5 (requires P0705 to be set to 99, BICO)
722.5 = Digital input 6 (requires P0706 to be set to 99, BICO)
722.6 = Digital input 7 (via analog input 1, requires P0707 to be set to 99)
722.7 = Digital input 8 (via analog input 2, requires P0708 to be set to 99)

P2221[3]	BI: Fixed PID setp. select Bit 1			Min: 0:0	Level
	CStat: CT	Datatype: U32	Unit: -	Def: 0:0	3
	P-Group: COMMANDS	Active: first confirm	QuickComm.: No	Max: 4000:0	

Defines command source of fixed PID setpoint selection Bit 1.

Index:

P2221[0] : 1st. Command data set (CDS)
P2221[1] : 2nd. Command data set (CDS)
P2221[2] : 3rd. Command data set (CDS)

Common Settings:

722.0 = Digital input 1 (requires P0701 to be set to 99, BICO)
722.1 = Digital input 2 (requires P0702 to be set to 99, BICO)
722.2 = Digital input 3 (requires P0703 to be set to 99, BICO)
722.3 = Digital input 4 (requires P0704 to be set to 99, BICO)
722.4 = Digital input 5 (requires P0705 to be set to 99, BICO)
722.5 = Digital input 6 (requires P0706 to be set to 99, BICO)

P2222[3]	**BI: Fixed PID setp. select Bit 2**			**Min:** 0:0	Level
	CStat: CT	**Datatype:** U32	**Unit:** -	**Def:** 0:0	**3**
	P-Group: COMMANDS	**Active:** first confirm	**QuickComm.:** No	**Max:** 4000:0	

Defines command source of fixed PID setpoint selection Bit 2

Index:

P2222[0] : 1st. Command data set (CDS)
P2222[1] : 2nd. Command data set (CDS)
P2222[2] : 3rd. Command data set (CDS)

Common Settings:

722.0 = Digital input 1 (requires P0701 to be set to 99, BICO)
722.1 = Digital input 2 (requires P0702 to be set to 99, BICO)
722.2 = Digital input 3 (requires P0703 to be set to 99, BICO)
722.3 = Digital input 4 (requires P0704 to be set to 99, BICO)
722.4 = Digital input 5 (requires P0705 to be set to 99, BICO)
722.5 = Digital input 6 (requires P0706 to be set to 99, BICO)

P2223[3]	**BI: Fixed PID setp. select Bit 3**			**Min:** 0:0	Level
	CStat: CT	**Datatype:** U32	**Unit:** -	**Def:** 722:3	**3**
	P-Group: COMMANDS	**Active:** first confirm	**QuickComm.:** No	**Max:** 4000:0	

Defines command source of fixed PID setpoint selection Bit 3

Index:

P2223[0] : 1st. Command data set (CDS)
P2223[1] : 2nd. Command data set (CDS)
P2223[2] : 3rd. Command data set (CDS)

Common Settings:

722.0 = Digital input 1 (requires P0701 to be set to 99, BICO)
722.1 = Digital input 2 (requires P0702 to be set to 99, BICO)
722.2 = Digital input 3 (requires P0703 to be set to 99, BICO)
722.3 = Digital input 4 (requires P0704 to be set to 99, BICO)
722.4 = Digital input 5 (requires P0705 to be set to 99, BICO)
722.5 = Digital input 6 (requires P0706 to be set to 99, BICO)

r2224	**CO: Act. fixed PID setpoint**			**Min:** -	Level
		Datatype: Float	**Unit:** %	**Def:** -	**3**
	P-Group: TECH			**Max:** -	

Displays total output of PID fixed setpoint selection.

Note:

r2224 = 100 % corresponds to 4000 hex

P2225[3]	**Fixed PID setpoint mode - Bit 4**			**Min:** 1	Level
	CStat: CT	**Datatype:** U16	**Unit:** -	**Def:** 1	**3**
	P-Group: TECH	**Active:** first confirm	**QuickComm.:** No	**Max:** 2	

Direct selection or direct selection + ON Bit 4 for PID setpoint.

Possible Settings:

1 Direct selection
2 Direct selection + ON command

Index:

P2225[0] : 1st. Command data set (CDS)
P2225[1] : 2nd. Command data set (CDS)
P2225[2] : 3rd. Command data set (CDS)

P2226[3]	**BI: Fixed PID setp. select Bit 4**			**Min:** 0:0	Level
	CStat: CT	**Datatype:** U32	**Unit:** -	**Def:** 722:4	**3**
	P-Group: COMMANDS	**Active:** first confirm	**QuickComm.:** No	**Max:** 4000:0	

Defines command source of fixed PID setpoint selection Bit 4

Index:

P2226[0] : 1st. Command data set (CDS)
P2226[1] : 2nd. Command data set (CDS)
P2226[2] : 3rd. Command data set (CDS)

Common Settings:

722.0 = Digital input 1 (requires P0701 to be set to 99, BICO)
722.1 = Digital input 2 (requires P0702 to be set to 99, BICO)
722.2 = Digital input 3 (requires P0703 to be set to 99, BICO)
722.3 = Digital input 4 (requires P0704 to be set to 99, BICO)
722.4 = Digital input 5 (requires P0705 to be set to 99, BICO)
722.5 = Digital input 6 (requires P0706 to be set to 99, BICO)

P2227[3]	**Fixed PID setpoint mode - Bit 5**			**Min:** 1	Level
	CStat: CT	**Datatype:** U16	**Unit:** -	**Def:** 1	**3**
	P-Group: TECH	**Active:** first confirm	**QuickComm.:** No	**Max:** 2	

Direct selection / direct selection + ON Bit 5 for PID setpoint.

Possible Settings:

1 Direct selection
2 Direct selection + ON command

Index:

P2227[0] : 1st. Command data set (CDS)
P2227[1] : 2nd. Command data set (CDS)
P2227[2] : 3rd. Command data set (CDS)

P2228[3]	**BI: Fixed PID setp. select Bit 5**			**Min:** 0:0	Level
	CStat: CT	**Datatype:** U32	**Unit:** -	**Def:** 722:5	**3**
	P-Group: COMMANDS	**Active:** first confirm	**QuickComm.:** No	**Max:** 4000:0	

Defines command source of fixed PID setpoint selection Bit 5

Index:

P2228[0] : 1st. Command data set (CDS)
P2228[1] : 2nd. Command data set (CDS)
P2228[2] : 3rd. Command data set (CDS)

Common Settings:

722.0 = Digital input 1 (requires P0701 to be set to 99, BICO)
722.1 = Digital input 2 (requires P0702 to be set to 99, BICO)
722.2 = Digital input 3 (requires P0703 to be set to 99, BICO)
722.3 = Digital input 4 (requires P0704 to be set to 99, BICO)
722.4 = Digital input 5 (requires P0705 to be set to 99, BICO)
722.5 = Digital input 6 (requires P0706 to be set to 99, BICO)

P2231[3]	**Setpoint memory of PID-MOP**			**Min:** 0	Level
	CStat: CUT	**Datatype:** U16	**Unit:** -	**Def:** 0	**3**
	P-Group: TECH	**Active:** Immediately	**QuickComm.:** No	**Max:** 1	

Setpoint memory

Possible Settings:

0 PID-MOP setpoint will not be stored
1 PID-MOP setpoint will be stored (P2240 is updated)

Index:

P2231[0] : 1st. Drive data set (DDS)
P2231[1] : 2nd. Drive data set (DDS)
P2231[2] : 3rd. Drive data set (DDS)

Dependency:

P2231 = 0:
If 0 selected, setpoint returns to value set in P2240 (setpoint of PID-MOP) after an OFF command.

P2231 = 1:
If 1 is selected, active setpoint is remembered and P2240 updated with current value.

Details:

See P2240 (setpoint of PID-MOP)

P2232	**Inhibit neg. PID-MOP setpoints**			**Min:** 0	Level
	CStat: CT	**Datatype:** U16	**Unit:** -	**Def:** 1	**3**
	P-Group: TECH	**Active:** first confirm	**QuickComm.:** No	**Max:** 1	

This parameter suppresses negative setpoints of the PID-MOP output r2250.

Possible Settings:

0 Neg. PID-MOP setpoint is allowed
1 Neg. PID-MOP setpoint inhibited

Note:

Setting 0 enables a change of motor direction using the motor potentiometer setpoint (increase/decrease frequency either by using digital inputs or motor potentiometer up/down buttons.

P2235[3]	**BI: Enable PID-MOP (UP-cmd)**			**Min:** 0:0	Level
	CStat: CT	**Datatype:** U32	**Unit:** -	**Def:** 19:13	**3**
	P-Group: COMMANDS	**Active:** first confirm	**QuickComm.:** No	**Max:** 4000:0	

Defines source of UP command.

Index:

P2235[0] : 1st. Command data set (CDS)
P2235[1] : 2nd. Command data set (CDS)
P2235[2] : 3rd. Command data set (CDS)

Common Settings:

722.0 = Digital input 1 (requires P0701 to be set to 99, BICO)
722.1 = Digital input 2 (requires P0702 to be set to 99, BICO)
722.2 = Digital input 3 (requires P0703 to be set to 99, BICO)
722.3 = Digital input 4 (requires P0704 to be set to 99, BICO)
722.4 = Digital input 5 (requires P0705 to be set to 99, BICO)
722.5 = Digital input 6 (requires P0706 to be set to 99, BICO)
19.D = Keypad UP button

Dependency:

To change setpoint:
1. Use UP / DOWN key on BOP or
2. Set P0702/P0703 = 13/14 (function of digital inputs 2 and 3)

P2236[3]	**BI: Enable PID-MOP (DOWN-cmd)**			**Min:** 0:0	Level
	CStat: CT	**Datatype:** U32	**Unit:** -	**Def:** 19:14	**3**
	P-Group: COMMANDS	**Active:** first confirm	**QuickComm.:** No	**Max:** 4000:0	

Defines source of DOWN command.

Index:

P2236[0] : 1st. Command data set (CDS)
P2236[1] : 2nd. Command data set (CDS)
P2236[2] : 3rd. Command data set (CDS)

Common Settings:

722.0 = Digital input 1 (requires P0701 to be set to 99, BICO)
722.1 = Digital input 2 (requires P0702 to be set to 99, BICO)
722.2 = Digital input 3 (requires P0703 to be set to 99, BICO)
722.3 = Digital input 4 (requires P0704 to be set to 99, BICO)
722.4 = Digital input 5 (requires P0705 to be set to 99, BICO)
722.5 = Digital input 6 (requires P0706 to be set to 99, BICO)
722.6 = Digital input 7 (via analog input 1, requires P0707 to be set to 99)
722.7 = Digital input 8 (via analog input 2, requires P0708 to be set to 99)
19.E = Keypad DOWN button

Dependency:

To change setpoint:
1. Use UP / DOWN key on BOP or
2. Set P0702/P0703 = 13/14 (function of digital inputs 2 and 3)

P2240[3]	**Setpoint of PID-MOP**			**Min:** -200.00	Level
	CStat: CUT	**Datatype:** Float	**Unit:** %	**Def:** 10.00	**3**
	P-Group: TECH	**Active:** Immediately	**QuickComm.:** No	**Max:** 200.00	

Setpoint of the motor potentiometer.

If the 'higher' or 'lower' key (e.g. on the BOP) is pressed briefly (< 1 second) the frequency setpoint is changed in increments of 0.1 Hz.
The setpoint change is accelerated if the keys are pressed for longer.

Allows user to set a digital PID setpoint in [%].

Index:

P2240[0] : 1st. Drive data set (DDS)
P2240[1] : 2nd. Drive data set (DDS)
P2240[2] : 3rd. Drive data set (DDS)

Note:

P2240 = 100 % corresponds to 4000 hex

r2250	**CO: Output setpoint of PID-MOP**			**Min:** -	Level
		Datatype: Float	**Unit:** %	**Def:** -	**3**
	P-Group: TECH			**Max:** -	

Displays output setpoint of motor potentiometer in [%].

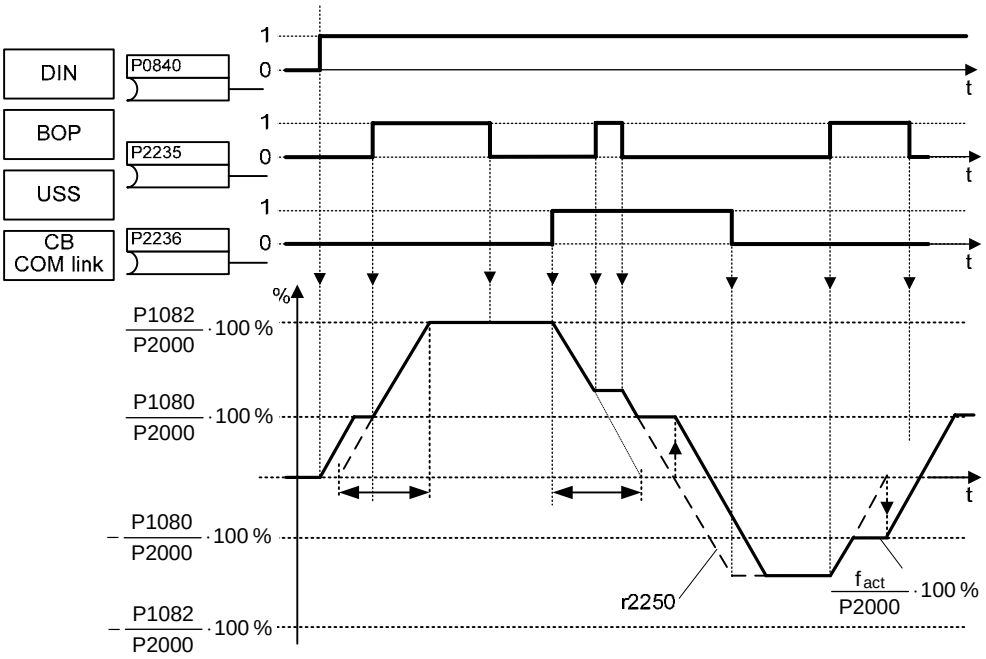

Note:

r2250 = 100 % corresponds to 4000 hex

P2253[3]	**CI: PID setpoint**			**Min:** 0:0	Level
	CStat: CUT	**Datatype:** U32	**Unit:** -	**Def:** 2250:0	**2**
	P-Group: TECH	**Active:** first confirm	**QuickComm.:** No	**Max:** 4000:0	

Defines setpoint source for PID setpoint input.

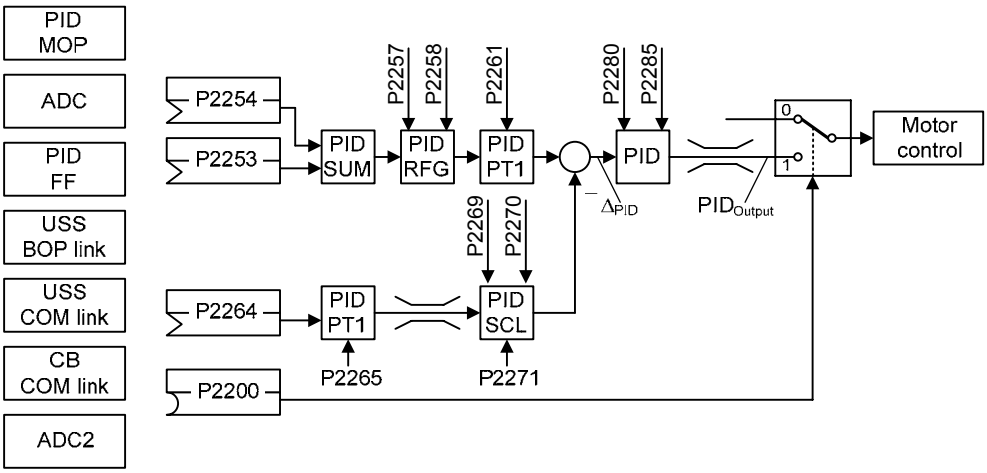

Index:

P2253[0] : 1st. Command data set (CDS)
P2253[1] : 2nd. Command data set (CDS)
P2253[2] : 3rd. Command data set (CDS)

Common Settings:

Parameter	Parameter text	Setting	Meaning
P2200	BI: Enable PID controller	0	PID controller de-activated
		1.0	PID controller always active
		722.x	Digital input x
		BICO	BICO parameter
P2253	CI: PID setpoint	2224	Fixed PID setpoint (PID-FF)
		2250	PID-MOP
		755.0	Analog input 1
		2015.1	USS on BOP link
		2019.1	USS on COM link
		2050.1	CB on COM link
P2264	CI: PID feedback	755.0	Analog input 1
		755.1	Analog input 2

P2254[3]	**CI: PID trim source**			**Min:** 0:0	Level
	CStat: CUT	**Datatype:** U32	**Unit:** -	**Def:** 0:0	**3**
	P-Group: TECH	**Active:** first confirm	**QuickComm.:** No	**Max:** 4000:0	

Selects trim source for PID setpoint. This signal is multiplied by the trim gain and added to the PID setpoint.

Index:

P2254[0] : 1st. Command data set (CDS)
P2254[1] : 2nd. Command data set (CDS)
P2254[2] : 3rd. Command data set (CDS)

Common Settings:

See parameter P2253

P2255	**PID setpoint gain factor**			**Min:** 0.00	Level
	CStat: CUT	**Datatype:** Float	**Unit:** -	**Def:** 100.00	**3**
	P-Group: TECH	**Active:** Immediately	**QuickComm.:** No	**Max:** 100.00	

Gain factor for PID setpoint. The PID setpoint input is multiplied by this gain factor to produce a suitable ratio between setpoint and trim.

P2256	**PID trim gain factor**			**Min:** 0.00	Level
	CStat: CUT	**Datatype:** Float	**Unit:** -	**Def:** 100.00	**3**
	P-Group: TECH	**Active:** Immediately	**QuickComm.:** No	**Max:** 100.00	

Gain factor for PID trim. This gain factor scales the trim signal, which is added to the main PID setpoint.

P2257	**Ramp-up time for PID setpoint**			**Min:** 0.00	Level
	CStat: CUT	**Datatype:** Float	**Unit:** s	**Def:** 1.00	**2**
	P-Group: TECH	**Active:** Immediately	**QuickComm.:** No	**Max:** 650.00	

Sets the ramp-up time for the PID setpoint.

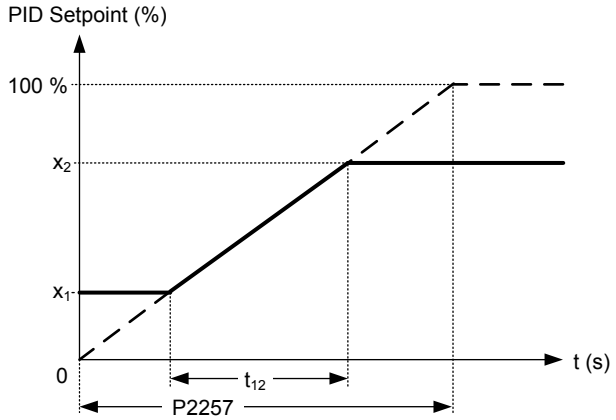

$$t_{12} = \frac{|x_2 - x_1|}{100\%} \cdot P2257$$

Dependency:

P2200 = 1 (PID control is enabled) disables normal ramp-up time (P1120).

PID ramp time effective only on PID setpoint and only active when PID setpoint is changed or when RUN command is given.

Notice:

Setting the ramp-up time too short may cause the inverter to trip, on overcurrent for example.

P2258	**Ramp-down time for PID setpoint**			**Min:** 0.00	Level
	CStat: CUT	**Datatype:** Float	**Unit:** s	**Def:** 1.00	**2**
	P-Group: TECH	**Active:** Immediately	**QuickComm.:** No	**Max:** 650.00	

Sets ramp-down time for PID setpoint.

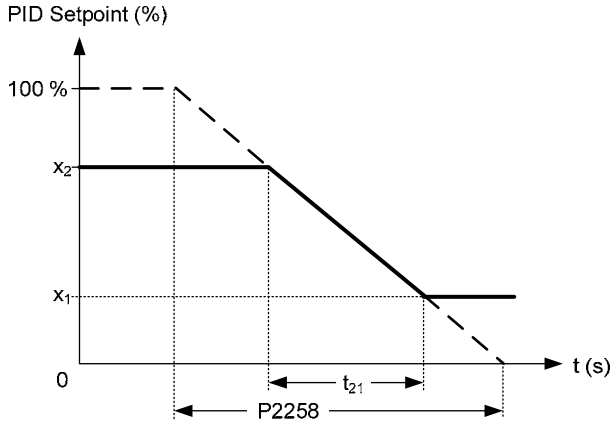

$$t_{21} = \frac{|x_1 - x_2|}{100\%} \cdot P2258$$

Dependency:

- P2200 = 1 (PID control is enabled) disables normal ramp-up time (P1120).
- PID setpoint ramp effective only on PID setpoint changes.
- P1121 (ramp-down time) and P1135 (OFF3 ramp-down time) define the ramp times used after OFF1 and OFF3 respectively.

Notice:

Setting the ramp-down time too short can cause the inverter to trip on overvoltage (F0002) / overcurrent (F0001).

r2260	**CO: PID setpoint after PID-RFG**			**Min:** -	Level
		Datatype: Float	**Unit:** %	**Def:** -	**2**
	P-Group: TECH			**Max:** -	

Displays total active PID setpoint after PID-RFG in [%].

Note:

r2260 = 100 % corresponds to 4000 hex

P2261	**PID setpoint filter timeconstant**			**Min:** 0.00	Level
	CStat: CUT	**Datatype:** Float	**Unit:** s	**Def:** 0.00	**3**
	P-Group: TECH	**Active:** Immediately	**QuickComm.:** No	**Max:** 60.00	

Sets a time constant for smoothing the PID setpoint.

Note:

0 = no smoothing

r2262	**CO: Filtered PID setp. after RFG**			**Min:** -	Level
		Datatype: Float	**Unit:** %	**Def:** -	**3**
	P-Group: TECH			**Max:** -	

Displays the filtered PID setpoint after the PID ramp-function generator (PID_HLG) as percentage. Parameter r2262 is obtained from the filtered parameter r2260 that is filtered using the PT1 filter with time constant P2261.

Note:

r2262 = 100 % corresponds to 4000 hex

P2263	**PID controller type**			**Min:** 0	Level
	CStat: T	**Datatype:** U16	**Unit:** -	**Def:** 0	**3**
	P-Group: TECH	**Active:** Immediately	**QuickComm.:** No	**Max:** 1	

Sets the PID controller type.

Possible Settings:

0 D component on feedback signal
1 D component on error signal

P2264[3]	**CI: PID feedback**			**Min:** 0:0	Level
	CStat: CUT	**Datatype:** U32	**Unit:** -	**Def:** 755:1	**2**
	P-Group: TECH	**Active:** first confirm	**QuickComm.:** No	**Max:** 4000:0	

Selects the source of the PID feedback signal.

Index:

P2264[0] : 1st. Command data set (CDS)
P2264[1] : 2nd. Command data set (CDS)
P2264[2] : 3rd. Command data set (CDS)

Common Settings:

Parameter	Parameter text	Setting	Meaning
P2200	BI: Enable PID controller	0	PID controller de-activated
		1.0	PID controller always active
		722.x	Digital input x
		BICO	BICO parameter
P2253	CI: PID setpoint	2224	Fixed PID setpoint (PID-FF)
		2250	PID-MOP
		755.0	Analog input 1
		2015.1	USS on BOP link
		2019.1	USS on COM link
		2050.1	CB on COM link
P2264	CI: PID feedback	755.0	Analog input 1
		755.1	Analog input 2

Note:

When analog input is selected, offset and gain can be implemented using parameters P0756 to P0760 (ADC scaling).

P2265	**PID feedback filter timeconstant**			**Min:** 0.00	Level
	CStat: CUT	**Datatype:** Float	**Unit:** s	**Def:** 0.00	**2**
	P-Group: TECH	**Active:** Immediately	**QuickComm.:** No	**Max:** 60.00	

Defines time constant for PID feedback filter.

r2266	**CO: PID filtered feedback**			**Min:** -	Level
		Datatype: Float	**Unit:** %	**Def:** -	**2**
	P-Group: TECH			**Max:** -	

Displays PID feedback signal in [%].

Note:

r2266 = 100 % corresponds to 4000 hex

P2267	**Max. value for PID feedback**			**Min:** -200.00	Level
	CStat: CUT	**Datatype:** Float	**Unit:** %	**Def:** 100.00	**3**
	P-Group: TECH	**Active:** Immediately	**QuickComm.:** No	**Max:** 200.00	

Sets the upper limit for the value of the feedback signal in [%].

Note:

- P2267 = 100 % corresponds to 4000 hex
- When PID is enabled (P2200 = 1) and the signal rises above this value, the inverter will trip with F0222 .

P2268	**Min. value for PID feedback**			**Min:** -200.00	Level
	CStat: CUT	**Datatype:** Float	**Unit:** %	**Def:** 0.00	**3**
	P-Group: TECH	**Active:** Immediately	**QuickComm.:** No	**Max:** 200.00	

Sets lower limit for value of feedback signal in [%].

Note:

- P2268 = 100 % corresponds to 4000 hex
- When PID is enabled (P2200 = 1) and the signal rises below this value, the inverter will trip with F0221.

P2269	**Gain applied to PID feedback**			**Min:** 0.00	Level
	CStat: CUT	**Datatype:** Float	**Unit:** -	**Def:** 100.00	**3**
	P-Group: TECH	**Active:** Immediately	**QuickComm.:** No	**Max:** 500.00	

Allows the user to scale the PID feedback as a percentage value [%].

A gain of 100.0 % means that feedback signal has not changed from its default value.

P2270	**PID feedback function selector**			**Min:** 0	Level
	CStat: CUT	**Datatype:** U16	**Unit:** -	**Def:** 0	**3**
	P-Group: TECH	**Active:** Immediately	**QuickComm.:** No	**Max:** 3	

Applies mathematical functions to the PID feedback signal, allowing multiplication of the result by P2269 (gain applied to PID feedback).

Possible Settings:

0 Disabled
1 Square root (root(x))
2 Square (x*x)
3 Cube (x*x*x)

P2271	**PID transducer type**			**Min:** 0	Level
	CStat: CUT	**Datatype:** U16	**Unit:** -	**Def:** 0	**2**
	P-Group: TECH	**Active:** Immediately	**QuickComm.:** No	**Max:** 1	

Allows the user to select the transducer type for the PID feedback signal.

Possible Settings:

0 Disabled
1 Inversion of PID feedback signal

Notice:

It is essential that you select the correct tranducer type.

If you are unsure whether 0 or 1 is applicable, you can determine the correct type as follows:

1. Disable the PID function (P2200 = 0).
2. Increase the motor frequency while measuring the feedback signal.
3. If the feedback signal increases with an increase in motor frequency, the PID transducer type should be 0.
4. If the feedback signal decreases with an increase in motor frequency the PID transducer type should be set to 1.

r2272	**CO: PID scaled feedback**			**Min:** -	Level
		Datatype: Float	**Unit:** %	**Def:** -	**2**
	P-Group: TECH			**Max:** -	

Displays PID scaled feedback signal in [%].

Note:

r2272 = 100 % corresponds to 4000 hex

r2273	**CO: PID error**			**Min:** -	Level
		Datatype: Float	**Unit:** %	**Def:** -	**2**
	P-Group: TECH			**Max:** -	

Displays PID error (difference) signal between setpoint and feedback signals in [%].

Note:

r2273 = 100 % corresponds to 4000 hex

P2274	**PID derivative time**			**Min:** 0.000	Level
	CStat: CUT	**Datatype:** Float	**Unit:** s	**Def:** 0.000	**2**
	P-Group: TECH	**Active:** Immediately	**QuickComm.:** No	**Max:** 60.000	

Sets PID derivative time.

P2274 = 0:
The derivative term does not have any effect (it applies a gain of 1).

P2280	**PID proportional gain**			**Min:** 0.000	Level
	CStat: CUT	**Datatype:** Float	**Unit:** -	**Def:** 3.000	**2**
	P-Group: TECH	**Active:** Immediately	**QuickComm.:** No	**Max:** 65.000	

Allows user to set proportional gain for PID controller.

The PID controller is implemented using the standard model.

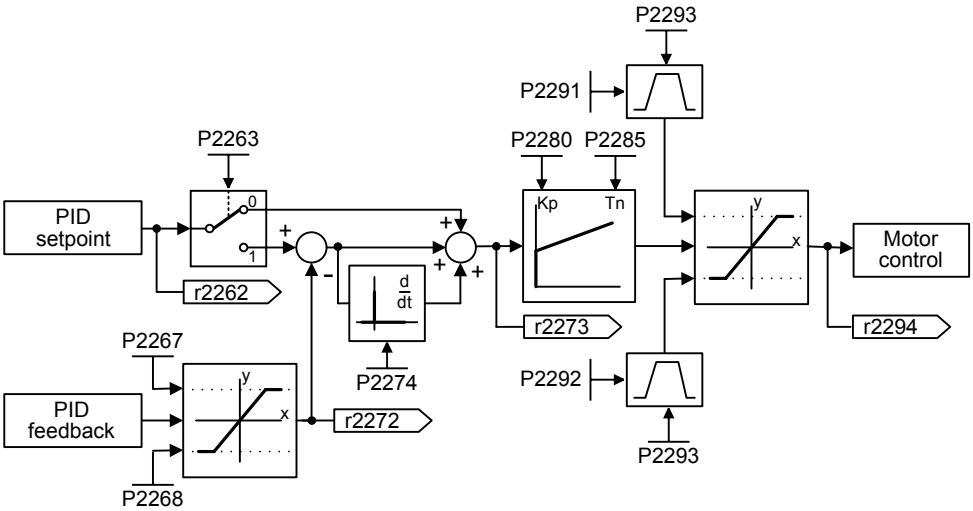

For best results, enable both P and I terms.

Dependency:

P2280 = 0 (P term of PID = 0):
I term acts on the square of the error signal.

P2285 = 0 (I term of PID = 0):
PID controller acts as a P or PD controller respectively.

Note:

- If the system is prone to sudden step changes in the feedback signal, P term should normally be set to a small value (0.5) with a faster I term for optimum performance.

- The D term (P2274) multiplies the difference between the present and previous feedback signal thus accelerating the controller reaction to an error that appears suddenly.
- The D term should be used carefully, since it can cause the controller output to fluctuate as every change in the feedback signal is amplified by the controller derivative action.

P2285	**PID integral time**			**Min:** 0.000	Level
	CStat: CUT	**Datatype:** Float	**Unit:** s	**Def:** 0.000	**2**
	P-Group: TECH	**Active:** Immediately	**QuickComm.:** No	**Max:** 60.000	

Sets integral time constant for PID controller.

Details:

See P2280 (PID proportional gain).

P2291	**PID output upper limit**			**Min:** -200.00	Level
	CStat: CUT	**Datatype:** Float	**Unit:** %	**Def:** 100.00	**2**
	P-Group: TECH	**Active:** Immediately	**QuickComm.:** No	**Max:** 200.00	

Sets upper limit for PID controller output in [%].

Dependency:

If F max (P1082) is greater than P2000 (reference frequency), either P2000 or P2291 (PID output upper limit) must be changed to achieve F max.

Note:

P2291 = 100 % corresponds to 4000 hex (as defined by P2000 (reference frequency)).

P2292	PID output lower limit			Min: -200.00	Level
	CStat: CUT	Datatype: Float	Unit: %	Def: 0.00	2
	P-Group: TECH	Active: Immediately	QuickComm.: No	Max: 200.00	

Sets lower limit for the PID controller output in [%].

Dependency:

A negative value allows bipolar operation of PID controller.

Note:

P2292 = 100 % corresponds to 4000 hex

P2293	Ramp-up /-down time of PID limit			Min: 0.00	Level
	CStat: CUT	Datatype: Float	Unit: s	Def: 1.00	3
	P-Group: TECH	Active: Immediately	QuickComm.: No	Max: 100.00	

Sets maximum ramp rate on output of PID.

When PI is enabled, the output limits are ramped up from 0 to the limits set in P2291 (PID output upper limit) and P2292 (PID output lower limit). Limits prevent large step changes appearing on the output of the PID when the inverter is started. Once the limits have been reached, the PID controller output is instantaneous.

These ramp times are used whenever a RUN command is issued.

Note:

If an OFF1 or OFF 3 are issued, the inverter output frequency ramps down as set in P1121 (ramp-down time) or P1135 (OFF3 ramp-down time).

r2294	CO: Act. PID output			Min: -	Level
		Datatype: Float	Unit: %	Def: -	2
	P-Group: TECH			Max: -	

Displays PID output in [%]

Note:

r2294 = 100 % corresponds to 4000 hex

3.37 Staging

P2370[3]	Motor staging stop mode			Min: 0	Level
	CStat: CT	Datatype: U16	Unit: -	Def: 0	3
	P-Group: TECH	Active: Immediately	QuickComm.: No	Max: 1	

Selects stop mode for external motors when motor staging is in use.

Possible Settings:

0 Normal stop
1 Sequence stop

Index:

P2370[0] : 1st. Drive data set (DDS)
P2370[1] : 2nd. Drive data set (DDS)
P2370[2] : 3rd. Drive data set (DDS)

P2371[3]	Motor staging configuration			Min: 0	Level
	CStat: CT	Datatype: U16	Unit: -	Def: 0	3
	P-Group: TECH	Active: Immediately	QuickComm.: No	Max: 8	

Selects configuration of external motors (M1, M2, M3) used for motor staging feature.

Possible Settings:

0 Motor staging disabled
1 M1 = 1X, M2 = , M3 =
2 M1 = 1X, M2 = 1X, M3 =
3 M1 = 1X, M2 = 2X, M3 =
4 M1 = 1X, M2 = 1X, M3 = 1X
5 M1 = 1X, M2 = 1X, M3 = 2X
6 M1 = 1X, M2 = 2X, M3 = 3X
7 M1 = 1X, M2 = 1X, M3 = 3X
8 M1 = 1X, M2 = 2X, M3 = 3X

Index:

P2371[0] : 1st. Drive data set (DDS)
P2371[1] : 2nd. Drive data set (DDS)
P2371[2] : 3rd. Drive data set (DDS)

Caution:

For this kind of motor application it is mandatory to disable negative frequency setpoint!

Note:

For staging applications it is necesarry to enable the PID controller.

Details:

Motor staging allows the control of up to 3 additional staged pumps or fans, based on a PID control system. The complete system consists of one pump controlled by the inverter with up to 3 further pumps / fans controlled from contactors or motor starters. The contactors or motor starter are controlled by outputs from the inverter. The diagram below shows a typical pumping system. A similar system could be set up using fans and air ducts, instead of pumps and pipes.

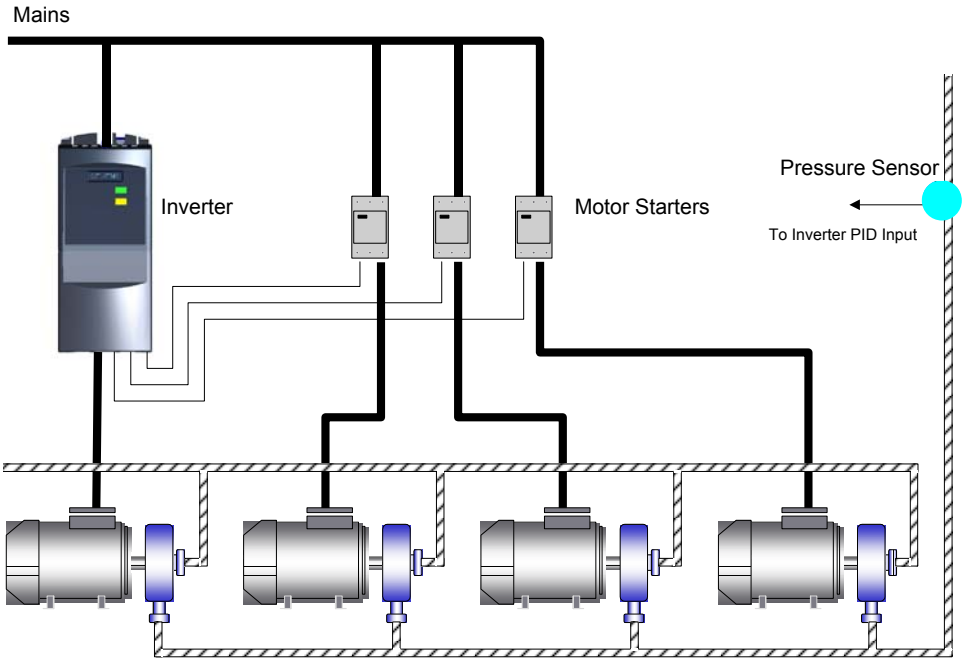

By default the motor startes are controlled from relay outputs (DOUT). In the text below, the following terminology will be used:

MV - Variable speed (Inverter controlled motor)
M1 - Motor switched with relay 1 (DOUT 1)
M2 - Motor switched with relay 2 (DOUT 2)
M3 - Motor switched with relay 3 (DOUT 3)

Staging: The process of starting one of the fixed speed motors.
De-staging: The process of stopping one of the fixed speed motors.

When the inverter is running at maximum frequency, and the PID feedback indicates that a higher frequency is required, the inverter switches on (stages) one of the relay controlled motors M1 to M3. At the same time, to keep the controlled variable as constant as possible, the inverter must ramp down to minimum frequency. Therefore, during the staging process, PID control must be suspended (see P2378 and diagram below).

Staging of external motors (M1, M2, M3)

Switch-on

P2371 =		1.	2.	3.	4.	5.	6.	7. ▶t
	0	-	-	-	-	-	-	-
	1	-	M1	M1	M1	M1	M1	M1	M1
	2	-	M1	M1+M2	M1+M2	M1+M2	M1+M2	M1+M2	M1+M2
	3	-	M1	M2	M1+M2	M1+M2	M1+M2	M1+M2	M1+M2
	4	-	M1	M1+M2	M1+M2+M3	M1+M2+M3	M1+M2+M3	M1+M2+M3	M1+M2+M3
	5	-	M1	M3	M1+M3	M1+M2+M3	M1+M2+M3	M1+M2+M3	M1+M2+M3
	6	-	M1	M2	M1+M2	M2+M3	M1+M2+M3	M1+M2+M3	M1+M2+M3
	7	-	M1	M1+M2	M3	M1+M3	M1+M2+M3	M1+M2+M3	M1+M2+M3
	8	-	M1	M2	M3	M1+M3	M2+M3	M1+M2+M3	M1+M2+M3

When the inverter is running at minimum frequency, and the PID feedback indicates that a lower frequency is required, the inverter switches off (de-stages) one of the relay controlled motors M1 to M3. In this case, the inverter must ramp from minimum frequency to maximum frequency outside of PID control (see P2378 and diagram below).

Destaging of external motors (M1, M2, M3)

Switch-off

P2371 =		1.	2.	3.	4.	5.	6.	7. ▶t
	0	-	-	-	-	-	-	-	-
	1	M1	-	-	-	-	-	-	-
	2	M1+M2	M1	-	-	-	-	-	-
	3	M1+M2	M2	M1	-	-	-	-	-
	4	M1+M2+M3	M2+M1	M1	-	-	-	-	-
	5	M1+M2+M3	M3+M1	M3	M1	-	-	-	-
	6	M1+M2+M3	M3+M2	M2+M1	M2	M1	-	-	-
	7	M1+M2+M3	M3+M1	M3	M2+M1	M1	-	-	-
	8	M1+M2+M3	M3+M2	M3+M1	M3	M2	M1	-	-

P2372[3] Motor staging cycling

						Level
CStat: CT	**Datatype:** U16	**Unit:** -	**Min:** 0			3
P-Group: TECH	**Active:** first confirm	**QuickComm.:** No	**Def:** 0			
			Max: 1			

Enables motor cycling for the motor staging feature.

When enabled, the motor selected for staging/destaging is based on the hours run counter P2380. When staging, the motor with the least hours is switched on. When destaging, the motor with most hours is switched off.

If staged motors are different sizes the the choice of motor is first based on required motor size, and then if there is still a choice, on hours run.

Possible Settings:

0 Disabled
1 Enabled

Index:

P2372[0] : 1st. Drive data set (DDS)
P2372[1] : 2nd. Drive data set (DDS)
P2372[2] : 3rd. Drive data set (DDS)

P2373[3] Motor staging hysteresis

						Level
CStat: CUT	**Datatype:** Float	**Unit:** %	**Min:** 0.0			3
P-Group: TECH	**Active:** Immediately	**QuickComm.:** No	**Def:** 20.0			
			Max: 200.0			

P2373 as a percentage of PID setpoint that PID error P2273 must be exceeded before staging delay starts.

Index:

P2373[0] : 1st. Drive data set (DDS)
P2373[1] : 2nd. Drive data set (DDS)
P2373[2] : 3rd. Drive data set (DDS)

Note:

The value of this parameter must always be smaller than delay override lockout timer P2377.

P2374[3] Motor staging delay

						Level
CStat: CUT	**Datatype:** U16	**Unit:** s	**Min:** 0			3
P-Group: TECH	**Active:** Immediately	**QuickComm.:** No	**Def:** 30			
			Max: 650			

Time that PID error P2273 must exceed motor staging hysteresis P2373 before staging occurs.

Index:

P2374[0] : 1st. Drive data set (DDS)
P2374[1] : 2nd. Drive data set (DDS)
P2374[2] : 3rd. Drive data set (DDS)

P2375[3]	**Motor destaging delay**			**Min:** 0	Level
	CStat: CUT	**Datatype:** U16	**Unit:** s	**Def:** 30	**3**
	P-Group: TECH	**Active:** Immediately	**QuickComm.:** No	**Max:** 650	

Time that PID error P2273 must exceed motor staging hysteresis P2373 before destaging occurs.

Index:

P2375[0] : 1st. Drive data set (DDS)
P2375[1] : 2nd. Drive data set (DDS)
P2375[2] : 3rd. Drive data set (DDS)

P2376[3]	**Motor staging delay override**			**Min:** 0.0	Level
	CStat: CUT	**Datatype:** Float	**Unit:** %	**Def:** 25.0	**3**
	P-Group: TECH	**Active:** Immediately	**QuickComm.:** No	**Max:** 200.0	

P2376 as a percentage of PID setpoint. When the PID error P2273 exceeds this value, a motor is staged / destaged irrespective of the delay timers.

Index:

P2376[0] : 1st. Drive data set (DDS)
P2376[1] : 2nd. Drive data set (DDS)
P2376[2] : 3rd. Drive data set (DDS)

Note:

The value of this parameter must always be larger than staging hysteresis P2373.

P2377[3]	**Motor staging lockout timer**			**Min:** 0	Level
	CStat: CUT	**Datatype:** U16	**Unit:** s	**Def:** 30	**3**
	P-Group: TECH	**Active:** Immediately	**QuickComm.:** No	**Max:** 650	

Time for which delay override is prevented after a motor has been staged or destaged.

This prevents a second staging event immediately after a first, being caused by the transient conditions after the first staging event.

Index:

P2377[0] : 1st. Drive data set (DDS)
P2377[1] : 2nd. Drive data set (DDS)
P2377[2] : 3rd. Drive data set (DDS)

P2378[3]	**Motor staging frequency f_st [%]**			**Min:** 0.0	Level
	CStat: CUT	**Datatype:** Float	**Unit:** %	**Def:** 50.0	**3**
	P-Group: TECH	**Active:** Immediately	**QuickComm.:** No	**Max:** 120.0	

The frequency as a percentage of max. frequency. During a (de) staging event, as the inverter ramps from maximum to minimum frequency (or vice versa) this is the frequency at which the relay (DOUT) is switched. This is illustrated by the following diagrams.

Staging:

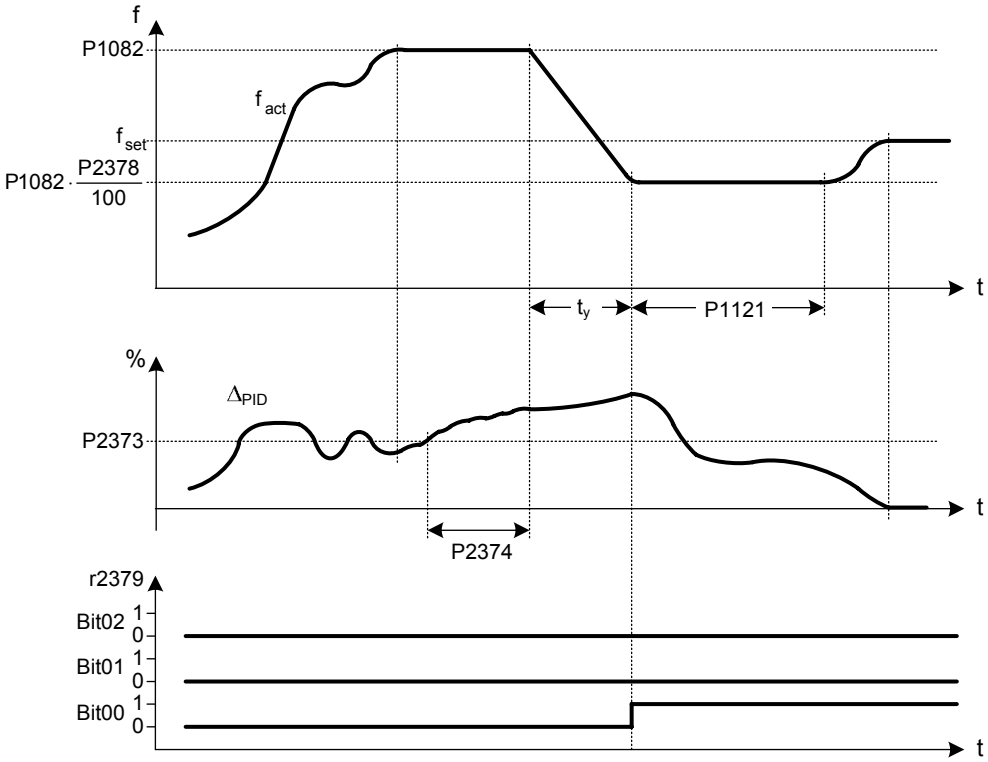

Condition for staging:

ⓐ $f_{act} \geq P1082$
ⓑ $\Delta_{PID} \geq P2373$
ⓒ $t_{ⓐⓑ} > P2374$

$$t_y = \left(1 - \frac{P2378}{100}\right) \cdot P1121$$

Destaging:

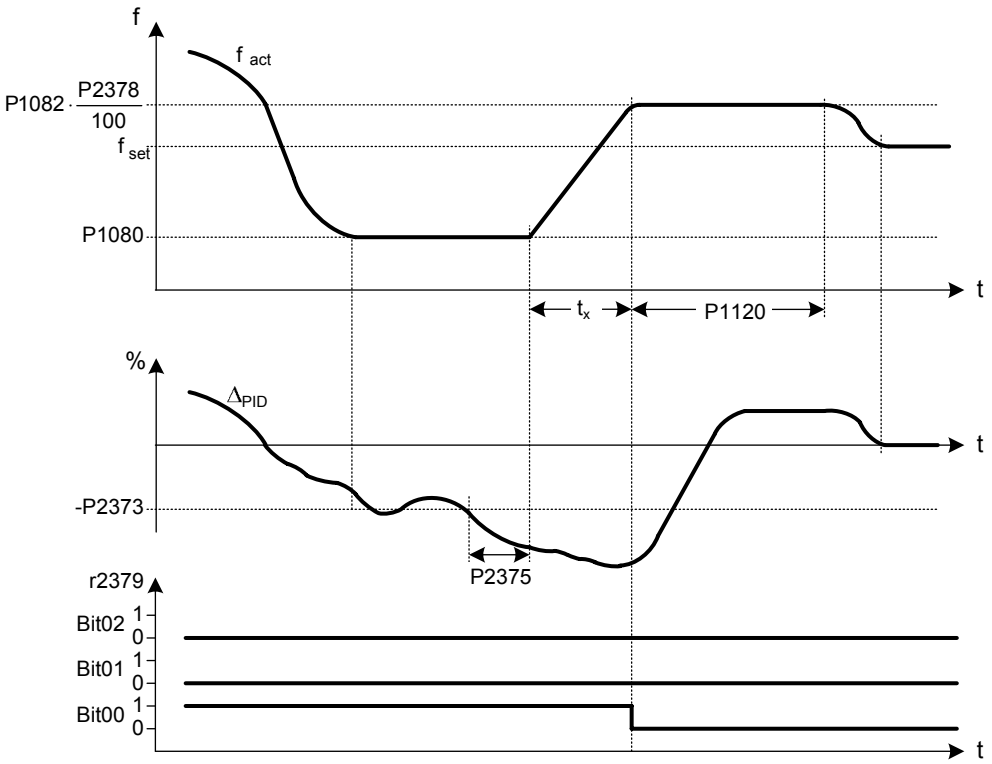

Condition for destaging:

ⓐ $f_{act} \leq$ P1080
ⓑ $\Delta_{PID} \leq$ -P2373
ⓒ $t_{ⓐⓑ}$ > P2375

$$tx = \left(\frac{P2378}{100} - \frac{P1080}{P1082}\right) \cdot P1120$$

Index:

P2378[0] : 1st. Drive data set (DDS)
P2378[1] : 2nd. Drive data set (DDS)
P2378[2] : 3rd. Drive data set (DDS)

r2379	**CO/BO: Motor staging status word**			**Min:** -	Level
		Datatype: U16	**Unit:** -	**Def:** -	**3**
	P-Group: TECH			**Max:** -	

Output word from the motor staging feature that allows external connections to be made. Bit 0 switches on Motor 1. Bit 1 switches on Motor 2. Bit 2 switches on Motor 3.

Bitfields:

Bit00	Start motor 1	0	NO	1	YES
Bit01	Start motor 2	0	NO	1	YES
Bit02	Start motor 3	0	NO	1	YES

P2380[3]	**Motor staging hours run**			**Min:** 0.0	Level
	CStat: CUT	**Datatype:** Float	**Unit:** h	**Def:** 0.0	**3**
	P-Group: TECH	**Active:** first confirm	**QuickComm.:** No	**Max:** 0.0	

Displays hours run for external motors. To reset the running hours, set the value to zero, any other value is ignored.

Index:

P2380[0] : Motor 1 hrs run
P2380[1] : Motor 2 hrs run
P2380[2] : Motor 3 hrs run

Example:

P2380 = 0.1 ==> 6 min

P2380 = 1.0 ==> 60 min = 1 h

3.38 Energy saving mode

P2390	Energy saving setpoint				Min: -200.00	Level
	CStat: CUT	Datatype: Float	Unit: %		Def: 0	3
	P-Group: TECH	Active: Immediately	QuickComm.: No		Max: 200.00	

When the inverter under PID control drops below energy saving setpoint, the energy saving timer P2391 is started. When the energy saving timer has expired, the inverter is ramped down to stop and enters energy saving mode (see diagram below).

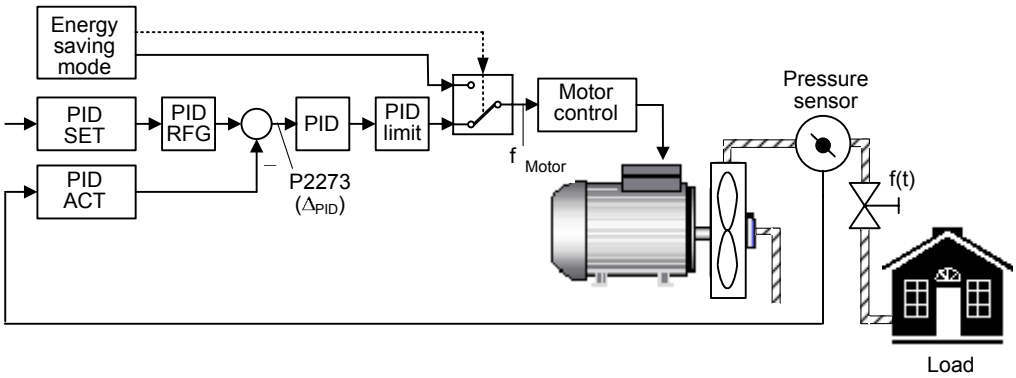

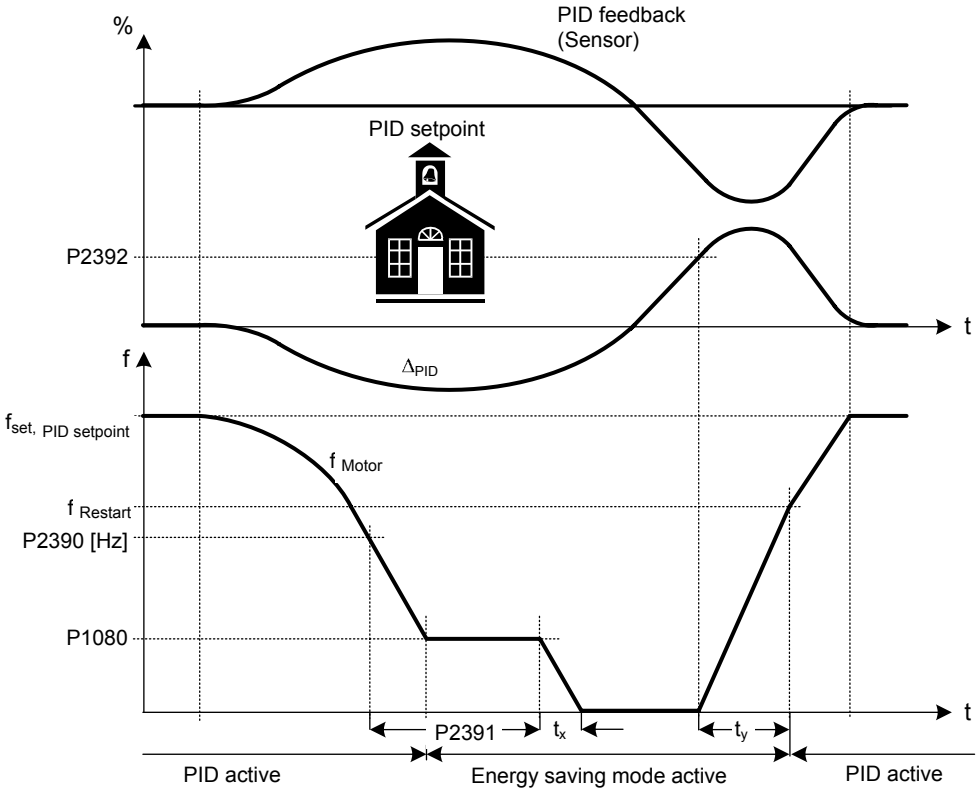

$$f_{Restart} = P2000 \cdot \frac{P2390 + 5\%}{100\,\%}$$

$$P2390\,[Hz] = P2000 \cdot \frac{P2390}{100\,\%}$$

$$t_x = \frac{P1080}{P1082} \cdot P1121$$

$$t_y = \frac{f_{Restart}}{P1082} \cdot P1120$$

Note:

If energy saving setpoint is 0, the energy saving function is disabled.

Notice:

Energy saving mode is an added feature to enhance PID functionality, and switches of the motor when the inverter is running at low setpoint.
Note that this is an independent function from staging, although it can be used together with staging.

P2391	**Energy saving timer**			**Min:** 0	Level
	CStat: CT	**Datatype:** U16	**Unit:** s	**Def:** 0	**3**
	P-Group: TECH	**Active:** Immediately	**QuickComm.:** No	**Max:** 254	

When the energy saving timer P2391 has expired, the inverter is ramped down to stop and enters energy saving mode (see description and diagram of P2390).

P2392	**Energy saving restart setpoint**			**Min:** -200.00	Level
	CStat: CT	**Datatype:** Float	**Unit:** %	**Def:** 0	**3**
	P-Group: TECH	**Active:** Immediately	**QuickComm.:** No	**Max:** 200.00	

While in energy saving mode, the PID controller continues to generate the error P2273 - once this reaches the restart point P2392 the inverter immediately ramps to the setpoint calculated by the PID controller (see description and diagram of P2390).

3.39 Free function blocks (FFB)

P2800	**Enable FFBs**			**Min:** 0	Level
	CStat: CUT	**Datatype:** U16	**Unit:** -	**Def:** 0	**3**
	P-Group: TECH	**Active:** first confirm	**QuickComm.:** No	**Max:** 1	

Free function blocks (FFB) are enabled in two steps.

1. Parameter P2800 enables all free function blocks , normally (P2800 = 1).
2. Parameters P2801 and P2802 respectively, enable each free function block individually (P2801[x] > 0 oder P2802[x] > 0).

Possible Settings:

0 Disabled
1 Enabled

Dependency:

All active function blocks will be calculated in every 132 ms.

P2801[17]	**Activate FFBs**			**Min:** 0	Level
	CStat: CUT	**Datatype:** U16	**Unit:** -	**Def:** 0	**3**
	P-Group: TECH	**Active:** first confirm	**QuickComm.:** No	**Max:** 3	

Free function blocks (FFB) are enabled in two steps.

1. Parameter P2800 enables all free function blocks , normally (P2800 = 1)
2. Parameters P2801 and P2802 respectively, enable each free function block individually (P2801[x] > 0 oder P2802[x] > 0)

In addition, Parameters P2801 and P2802 determine the chronological order of each function block. The following table shows that the priority increases from left to right and from bottom to top.

Priority 2: low ← high

Priority 1: ↓ low

	P2802 [13] CMP 2	P2802 [12] CMP 1	P2802 [11] DIV 2	P2802 [10] DIV 1	P2802 [9] MUL 2	P2802 [8] MUL 1	P2802 [7] SUB 2	P2802 [6] SUB 1	P2802 [5] ADD 2	P2802 [4] ADD 1	P2802 [3] Timer 4	P2802 [2] Timer 3	P2802 [1] Timer 2	P2802 [0] Timer 1	P2801 [16] RS-FF 3	P2801 [15] RS-FF 2	P2801 [14] RS-FF 1	P2801 [13] D-FF 2	P2801 [12] D-FF 1	P2801 [11] NOT 3	P2801 [10] NOT 2	P2801 [9] NOT 1	P2801 [8] XOR 3	P2801 [7] XOR 2	P2801 [6] XOR 1	P2801 [5] OR 3	P2801 [4] OR 2	P2801 [3] OR 1	P2801 [2] AND 3	P2801 [1] AND 2	P2801 [0] AND 1
Level 3																															
Level 2																															
Level 1																															
Inactive 0																															

Possible Settings:

0 Not Active
1 Level 1
2 Level 2
3 Level 3

Index:

P2801[0] : Enable AND 1
P2801[1] : Enable AND 2
P2801[2] : Enable AND 3
P2801[3] : Enable OR 1
P2801[4] : Enable OR 2
P2801[5] : Enable OR 3
P2801[6] : Enable XOR 1
P2801[7] : Enable XOR 2
P2801[8] : Enable XOR 3
P2801[9] : Enable NOT 1
P2801[10] : Enable NOT 2
P2801[11] : Enable NOT 3
P2801[12] : Enable D-FF 1
P2801[13] : Enable D-FF 2
P2801[14] : Enable RS-FF 1
P2801[15] : Enable RS-FF 2
P2801[16] : Enable RS-FF 3

Example:

P2801[3] = 2, P2801[4] = 2, P2802[3] = 3, P2802[4] = 2
FFBs will be calculated in following order:
P2802[3], P2801[3] , P2801[4], P2802[4]

Dependency:

- Set P2800 to 1 to enable function blocks.
- All active function blocks will be calculated in every 132 ms.

P2802[14]	**Activate FFBs**			**Min:** 0	Level
	CStat: CUT	**Datatype:** U16	**Unit:** -	**Def:** 0	**3**
	P-Group: TECH	**Active:** first confirm	**QuickComm.:** No	**Max:** 3	

Free function blocks (FFB) are enabled in two steps.

1. Parameter P2800 enables all free function blocks , normally (P2800 = 1)
2. Parameters P2801 and P2802 respectively, enable each free function block individually (P2801[x] > 0 oder P2802[x] > 0)

In addition, Parameters P2801 and P2802 determine the chronological order of each function block. The following table shows that the priority increases from left to right and from bottom to top.

low ← Priority 2 → high

Priority 1 ↓ low

	P2802 [13] CMP 2	P2802 [12] CMP 1	P2802 [11] DIV 2	P2802 [10] DIV 1	P2802 [9] MUL 2	P2802 [8] MUL 1	P2802 [7] SUB 2	P2802 [6] SUB 1	P2802 [5] ADD 2	P2802 [4] ADD 1	P2802 [3] Timer 4	P2802 [2] Timer 3	P2802 [1] Timer 2	P2802 [0] Timer 1	P2801 [16] RS-FF 3	P2801 [15] RS-FF 2	P2801 [14] RS-FF 1	P2801 [13] D-FF 2	P2801 [12] D-FF 1	P2801 [11] NOT 3	P2801 [10] NOT 2	P2801 [9] NOT 1	P2801 [8] XOR 3	P2801 [7] XOR 2	P2801 [6] XOR 1	P2801 [5] OR 3	P2801 [4] OR 2	P2801 [3] OR 1	P2801 [2] AND 3	P2801 [1] AND 2	P2801 [0] AND 1
Level 3																															
Level 2																															
Level 1																															
Inactive 0																															

Possible Settings:

0 Not Active
1 Level 1
2 Level 2
3 Level 3

Index:

P2802[0] : Enable timer 1
P2802[1] : Enable timer 2
P2802[2] : Enable timer 3
P2802[3] : Enable timer 4
P2802[4] : Enable ADD 1
P2802[5] : Enable ADD 2
P2802[6] : Enable SUB 1
P2802[7] : Enable SUB 2
P2802[8] : Enable MUL 1
P2802[9] : Enable MUL 2
P2802[10] : Enable DIV 1
P2802[11] : Enable DIV 2
P2802[12] : Enable CMP 1
P2802[13] : Enable CMP 2

Example:

P2801[3] = 2, P2801[4] = 2, P2802[3] = 3, P2802[4] = 2
FFBs will be calculated in following order:
P2802[3], P2801[3] , P2801[4], P2802[4]

Dependency:

- Set P2800 to 1 to enable function blocks.
- All active function blocks will be calculated in every 132 ms.

P2810[2]	**BI: AND 1**			**Min:** 0:0	Level
	CStat: CUT	**Datatype:** U32	**Unit:** -	**Def:** 0:0	**3**
	P-Group: TECH	**Active:** first confirm	**QuickComm.:** No	**Max:** 4000:0	

P2810[0], P2810[1] define inputs of AND 1 element, output is P2811.

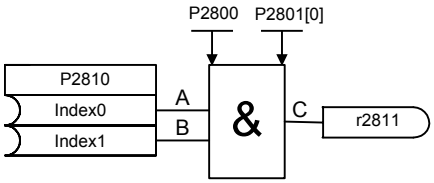

A	B	C
0	0	0
0	1	0
1	0	0
1	1	1

Index:

P2810[0] : Binector input 0 (BI 0)
P2810[1] : Binector input 1 (BI 1)

Dependency:

P2801[0] is active level for the AND element.

r2811	**BO: AND 1**			**Min:**	-	Level **3**
		Datatype: U16	**Unit:** -	**Def:**	-	
	P-Group: TECH			**Max:**	-	

Output of AND 1 element. Displays and logic of bits defined in P2810[0], P2810[1].

Dependency:

P2801[0] is active level for the AND element.

P2812[2]	**BI: AND 2**			**Min:**	0:0	Level **3**
	CStat: CUT	**Datatype:** U32	**Unit:** -	**Def:**	0:0	
	P-Group: TECH	**Active:** first confirm	**QuickComm.:** No	**Max:**	4000:0	

P2812[0], 2812[1] define inputs of AND 2 element, output is P2813.

Index:

P2812[0] : Binector input 0 (BI 0)
P2812[1] : Binector input 1 (BI 1)

Dependency:

P2801[1] is active level for the AND element.

r2813	**BO: AND 2**			**Min:**	-	Level **3**
		Datatype: U16	**Unit:** -	**Def:**	-	
	P-Group: TECH			**Max:**	-	

Output of AND 2 element. Displays and logic of bits defined in P2812[0], P2812[1].

Dependency:

P2801[1] is active level for the AND element.

P2814[2]	**BI: AND 3**			**Min:**	0:0	Level **3**
	CStat: CUT	**Datatype:** U32	**Unit:** -	**Def:**	0:0	
	P-Group: TECH	**Active:** first confirm	**QuickComm.:** No	**Max:**	4000:0	

P2814[0], P2814[1] define inputs of AND 3 element, output is P2815.

Index:

P2814[0] : Binector input 0 (BI 0)
P2814[1] : Binector input 1 (BI 1)

Dependency:

P2801[2] is active level for the AND element.

r2815	**BO: AND 3**			**Min:**	-	Level **3**
		Datatype: U16	**Unit:** -	**Def:**	-	
	P-Group: TECH			**Max:**	-	

Output of AND 3 element. Displays and logic of bits defined in P2814[0], P2814[1].

Dependency:

P2801[2] is active level for the AND element.

P2816[2]	**BI: OR 1**			**Min:**	0:0	Level **3**
	CStat: CUT	**Datatype:** U32	**Unit:** -	**Def:**	0:0	
	P-Group: TECH	**Active:** first confirm	**QuickComm.:** No	**Max:**	4000:0	

P2816[0], P2816[1] define inputs of OR 1 element, output is P2817.

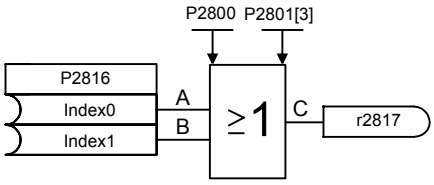

A	B	C
0	0	0
0	1	1
1	0	1
1	1	1

Index:

P2816[0] : Binector input 0 (BI 0)
P2816[1] : Binector input 1 (BI 1)

Dependency:

P2801[3] is active level for the OR element.

r2817	**BO: OR 1**			**Min:**	-	Level **3**
		Datatype: U16	**Unit:** -	**Def:**	-	
	P-Group: TECH			**Max:**	-	

Output of OR 1 element. Displays or logic of bits defined in P2816[0], P2816[1].

Dependency:

P2801[3] is active level for the OR element.

P2818[2]	**BI: OR 2**			**Min:** 0:0	Level
	CStat: CUT	**Datatype:** U32	**Unit:** -	**Def:** 0:0	**3**
	P-Group: TECH	**Active:** first confirm	**QuickComm.:** No	**Max:** 4000:0	

P2818[0], P2818[1] define inputs of OR 2 element, output is P2819.

Index:

P2818[0] : Binector input 0 (BI 0)
P2818[1] : Binector input 1 (BI 1)

Dependency:

P2801[4] is active level for the OR element.

r2819	**BO: OR 2**			**Min:** -	Level
		Datatype: U16	**Unit:** -	**Def:** -	**3**
	P-Group: TECH			**Max:** -	

Output of OR 2 element. Displays or logic of bits defined in P2818[0], P2818[1].

Dependency:

P2801[4] is active level for the OR element.

P2820[2]	**BI: OR 3**			**Min:** 0:0	Level
	CStat: CUT	**Datatype:** U32	**Unit:** -	**Def:** 0:0	**3**
	P-Group: TECH	**Active:** first confirm	**QuickComm.:** No	**Max:** 4000:0	

P2820[0], P2820[1] define inputs of OR 3 element, output is P2821.

Index:

P2820[0] : Binector input 0 (BI 0)
P2820[1] : Binector input 1 (BI 1)

Dependency:

P2801[5] is active level for the OR element.

r2821	**BO: OR 3**			**Min:** -	Level
		Datatype: U16	**Unit:** -	**Def:** -	**3**
	P-Group: TECH			**Max:** -	

Output of OR 3 element. Displays or logic of bits defined in P2820[0], P2820[1].

Dependency:

P2801[5] is active level for the OR element.

P2822[2]	**BI: XOR 1**			**Min:** 0:0	Level
	CStat: CUT	**Datatype:** U32	**Unit:** -	**Def:** 0:0	**3**
	P-Group: TECH	**Active:** first confirm	**QuickComm.:** No	**Max:** 4000:0	

P2822[0], P2822[1] define inputs of XOR 1 element, output is P2823.

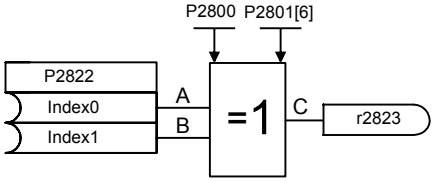

A	B	C
0	0	0
0	1	1
1	0	1
1	1	0

Index:

P2822[0] : Binector input 0 (BI 0)
P2822[1] : Binector input 1 (BI 1)

Dependency:

P2801[6] is active level for the XOR element.

r2823	**BO: XOR 1**			**Min:** -	Level
		Datatype: U16	**Unit:** -	**Def:** -	**3**
	P-Group: TECH			**Max:** -	

Output of XOR 1 element. Displays exclusive-or logic of bits defined in P2822[0], P2822[1].

Dependency:

P2801[6] is active level for the XOR element.

P2824[2]	**BI: XOR 2**			**Min:** 0:0	Level
	CStat: CUT	**Datatype:** U32	**Unit:** -	**Def:** 0:0	**3**
	P-Group: TECH	**Active:** first confirm	**QuickComm.:** No	**Max:** 4000:0	

P2824[0], P2824[1] define inputs of XOR 2 element, output is P2825.

Index:

P2824[0] : Binector input 0 (BI 0)
P2824[1] : Binector input 1 (BI 1)

Dependency:

P2801[7] is active level for the XOR element.

r2825	**BO: XOR 2**			**Min:** -		Level
		Datatype: U16	**Unit:** -	**Def:** -		**3**
	P-Group: TECH			**Max:** -		

Output of XOR 2 element. Displays exclusive-or logic of bits defined in P2824[0], P2824[1].

Dependency:

P2801[7] is active level for the XOR element.

P2826[2]	**BI: XOR 3**			**Min:**	0:0	Level
	CStat: CUT	**Datatype:** U32	**Unit:** -	**Def:**	0:0	**3**
	P-Group: TECH	**Active:** first confirm	**QuickComm.:** No	**Max:**	4000:0	

P2826[0], P2826[1] define inputs of XOR 3 element, output is P2827.

Index:

P2826[0] : Binector input 0 (BI 0)
P2826[1] : Binector input 1 (BI 1)

Dependency:

P2801[8] is active level for the XOR element.

r2827	**BO: XOR 3**			**Min:** -		Level
		Datatype: U16	**Unit:** -	**Def:** -		**3**
	P-Group: TECH			**Max:** -		

Output of XOR 3 element. Displays exclusive-or logic of bits defined in P2826[0], P2826[1].

Dependency:

P2801[8] is active level for the XOR element.

P2828	**BI: NOT 1**			**Min:**	0:0	Level
	CStat: CUT	**Datatype:** U32	**Unit:** -	**Def:**	0:0	**3**
	P-Group: TECH	**Active:** first confirm	**QuickComm.:** No	**Max:**	4000:0	

P2828 defines input of NOT 1 element, output is P2829.

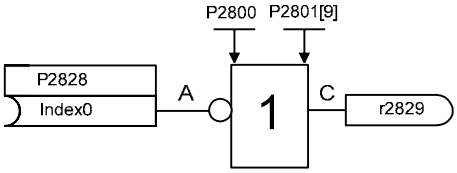

A	C
0	1
1	0

Dependency:

P2801[9] is active level for the NOT element.

r2829	**BO: NOT 1**			**Min:** -		Level
		Datatype: U16	**Unit:** -	**Def:** -		**3**
	P-Group: TECH			**Max:** -		

Output of NOT 1 element. Displays not logic of bit defined in P2828.

Dependency:

P2801[9] is active level for the NOT element.

P2830	**BI: NOT 2**			**Min:**	0:0	Level
	CStat: CUT	**Datatype:** U32	**Unit:** -	**Def:**	0:0	**3**
	P-Group: TECH	**Active:** first confirm	**QuickComm.:** No	**Max:**	4000:0	

P2830 defines input of NOT 2 element, output is P2831.

Dependency:

P2801[10] is active level for the NOT element.

r2831	**BO: NOT 2**			**Min:** -		Level
		Datatype: U16	**Unit:** -	**Def:** -		**3**
	P-Group: TECH			**Max:** -		

Output of NOT 2 element. Displays not logic of bit defined in P2830.

Dependency:

P2801[10] is active level for the NOT element.

P2832	**BI: NOT 3**			**Min:**	0:0	Level
	CStat: CUT	**Datatype:** U32	**Unit:** -	**Def:**	0:0	**3**
	P-Group: TECH	**Active:** first confirm	**QuickComm.:** No	**Max:**	4000:0	

P2832 defines input of NOT 3 element, output is P2833.

Dependency:

P2801[11] is active level for the NOT element.

r2833	**BO: NOT 3**			**Min:** -		Level
		Datatype: U16	**Unit:** -	**Def:** -		**3**
	P-Group: TECH			**Max:** -		

Output of NOT 3 element. Displays not logic of bit defined in P2832.

Dependency:

P2801[11] is active level for the NOT element.

P2834[4]	**BI: D-FF 1**			**Min:** 0:0	Level
	CStat: CUT	**Datatype:** U32	**Unit:** -	**Def:** 0:0	**3**
	P-Group: TECH	**Active:** first confirm	**QuickComm.:** No	**Max:** 4000:0	

P2834[0], P2834[1], P2834[2], P2834[3] define inputs of D-FlipFlop 1, outputs are P2835, P2836.

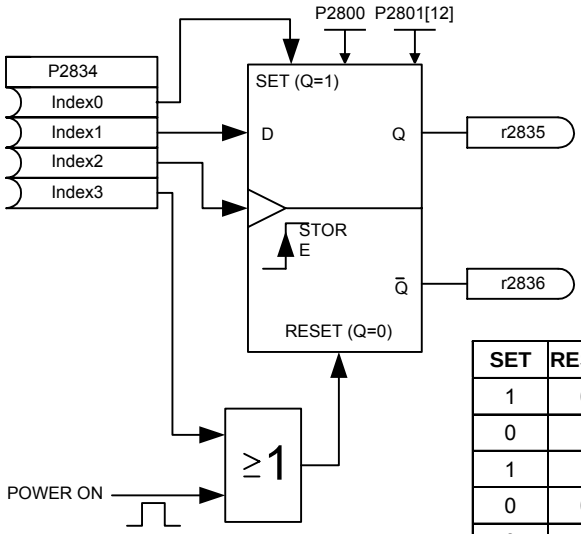

SET	RESET	D	STORE	Q	$\overline{Q}$
1	0	x	x	1	0
0	1	x	x	0	1
1	1	x	x	Q_{n-1}	$\overline{Q}_{n-1}$
0	0	1	↑	1	0
0	0	0	↑	0	1
POWER-ON				0	1

Index:

P2834[0] : Binector input: Set
P2834[1] : Binector input: D input
P2834[2] : Binector input: Store pulse
P2834[3] : Binector input: Reset

Dependency:

P2801[12] is active level for the D-FlipFlop.

r2835	**BO: Q D-FF 1**			**Min:** -	Level
		Datatype: U16	**Unit:** -	**Def:** -	**3**
	P-Group: TECH			**Max:** -	

Displays output of D-FlipFlop 1, inputs are defined in P2834[0], P2834[1], P2834[2], P2834[3]

Dependency:

P2801[12] is active level for the D-FlipFlop.

r2836	**BO: NOT-Q D-FF 1**			**Min:** -	Level
		Datatype: U16	**Unit:** -	**Def:** -	**3**
	P-Group: TECH			**Max:** -	

Displays Not-output of D-FlipFlop 1, inputs are defined in P2834[0], P2834[1], P2834[2], P2834[3]

Dependency:

P2801[12] is active level for the D-FlipFlop.

P2837[4]	**BI: D-FF 2**			**Min:** 0:0	Level
	CStat: CUT	**Datatype:** U32	**Unit:** -	**Def:** 0:0	**3**
	P-Group: TECH	**Active:** first confirm	**QuickComm.:** No	**Max:** 4000:0	

P2837[0], P2837[1], P2837[2], P2837[3] define inputs of D-FlipFlop 2, outputs are P2838, 2839.

Index:

P2837[0] : Binector input: Set
P2837[1] : Binector input: D input
P2837[2] : Binector input: Store pulse
P2837[3] : Binector input: Reset

Dependency:

P2801[13] is active level for the D-FlipFlop.

r2838	**BO: Q D-FF 2**			**Min:** -	Level
		Datatype: U16	**Unit:** -	**Def:** -	**3**
	P-Group: TECH			**Max:** -	

Displays output of D-FlipFlop 2, inputs are defined in P2837[0], P2837[1], P2837[2], P2837[3]

Dependency:

P2801[13] is active level for the D-FlipFlop.

r2839	**BO: NOT-Q D-FF 2**			**Min:**	-	Level
		Datatype: U16	**Unit:** -	**Def:**	-	**3**
	P-Group: TECH			**Max:**	-	

Displays Not-output of D-FlipFlop 2, inputs are defined in P2837[0], P2837[1], P2837[2], P2837[3]

Dependency:

P2801[13] is active level for the D-FlipFlop.

P2840[2]	**BI: RS-FF 1**			**Min:**	0:0	Level
	CStat: CUT	**Datatype:** U32	**Unit:** -	**Def:**	0:0	**3**
	P-Group: TECH	**Active:** first confirm	**QuickComm.:** No	**Max:**	4000:0	

P2840[0], P2840[1] define inputs of RS-FlipFlop 1, outputs are P2841, P2842.

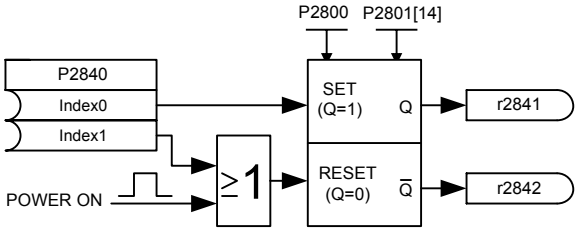

SET	RESET	Q	$\overline{Q}$
0	0	Q_{n-1}	$\overline{Q}_{n-1}$
0	1	0	1
1	0	1	0
1	1	Q_{n-1}	$\overline{Q}_{n-1}$
POWER-ON		0	1

Index:

P2840[0] : Binector input: Set
P2840[1] : Binector input: Reset

Dependency:

P2801[14] is active level for the RS-FlipFlop.

r2841	**BO: Q RS-FF 1**			**Min:**	-	Level
		Datatype: U16	**Unit:** -	**Def:**	-	**3**
	P-Group: TECH			**Max:**	-	

Displays output of RS-FlipFlop 1, inputs are defined in P2840[0], P2840[1]

Dependency:

P2801[14] is active level for the RS-FlipFlop.

r2842	**BO: NOT-Q RS-FF 1**			**Min:**	-	Level
		Datatype: U16	**Unit:** -	**Def:**	-	**3**
	P-Group: TECH			**Max:**	-	

Displays Not-output of RS-FlipFlop 1, inputs are defined in P2840[0], P2840[1]

Dependency:

P2801[14] is active level for the RS-FlipFlop.

P2843[2]	**BI: RS-FF 2**			**Min:**	0:0	Level
	CStat: CUT	**Datatype:** U32	**Unit:** -	**Def:**	0:0	**3**
	P-Group: TECH	**Active:** first confirm	**QuickComm.:** No	**Max:**	4000:0	

P2843[0], P2843[1] define inputs of RS-FlipFlop 2, outputs are P2844, P2845.

Index:

P2843[0] : Binector input: Set
P2843[1] : Binector input: Reset

Dependency:

P2801[15] is active level for the RS-FlipFlop.

r2844	**BO: Q RS-FF 2**			**Min:**	-	Level
		Datatype: U16	**Unit:** -	**Def:**	-	**3**
	P-Group: TECH			**Max:**	-	

Displays output of RS-FlipFlop 2, inputs are defined in P2843[0], P2843[1]

Dependency:

P2801[15] is active level for the RS-FlipFlop.

r2845	**BO: NOT-Q RS-FF 2**			**Min:**	-	Level
		Datatype: U16	**Unit:** -	**Def:**	-	**3**
	P-Group: TECH			**Max:**	-	

Displays Not-output of RS-FlipFlop 2, inputs are defined in P2843[0], P2843[1]

Dependency:

P2801[15] is active level for the RS-FlipFlop.

P2846[2]	**BI: RS-FF 3**				**Min:**	0:0	Level **3**
	CStat:	CUT	**Datatype:** U32	**Unit:** -	**Def:**	0:0	
	P-Group:	TECH	**Active:** first confirm	**QuickComm.:** No	**Max:**	4000:0	

P2846[0], P2846[1] define inputs of RS-FlipFlop 3, outputs are P2847, P2848.

Index:

P2846[0] : Binector input: Set
P2846[1] : Binector input: Reset

Dependency:

P2801[16] is active level for the RS-FlipFlop.

r2847	**BO: Q RS-FF 3**				**Min:**	-	Level **3**
			Datatype: U16	**Unit:** -	**Def:**	-	
	P-Group:	TECH			**Max:**	-	

Displays output of RS-FlipFlop 3, inputs are defined in P2846[0], P2846[1]

Dependency:

P2801[16] is active level for the RS-FlipFlop.

r2848	**BO: NOT-Q RS-FF 3**				**Min:**	-	Level **3**
			Datatype: U16	**Unit:** -	**Def:**	-	
	P-Group:	TECH			**Max:**	-	

Displays Not-output of RS-FlipFlop 3, inputs are defined in P2846[0], P2846[1]

Dependency:

P2801[16] is active level for the RS-FlipFlop.

P2849	**BI: Timer 1**					Level
	CStat: CUT	**Datatype:** U32	**Unit:** -	**Min:** 0:0		**3**
	P-Group: TECH	**Active:** first confirm	**QuickComm.:** No	**Def:** 0:0	**Max:** 4000:0	

Define input signal of timer 1. P2849, P2850, P2851 are the inputs of the timer, outputs are P2852, P2853.

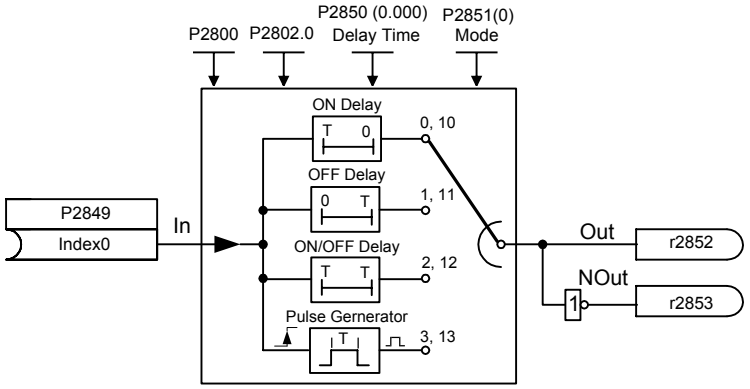

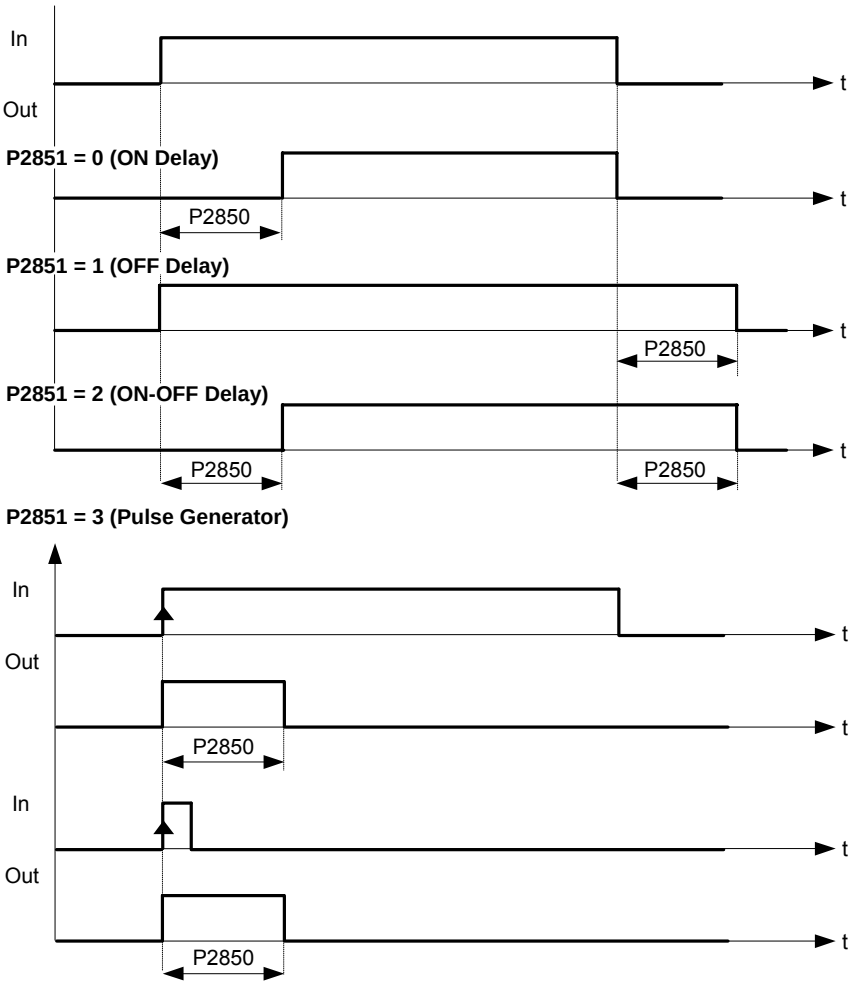

Dependency:

P2802[0] is active level for the timer.

P2850	**Delay time of timer 1**					Level
	CStat: CUT	**Datatype:** Float	**Unit:** -	**Min:** 0.0		**3**
	P-Group: TECH	**Active:** first confirm	**QuickComm.:** No	**Def:** 0.0	**Max:** 9999.9	

Defines delay time of timer 1. P2849, P2850, P2851 are the inputs of the timer, outputs are P2852, P2853.

Dependency:

P2802[0] is active level for the timer.

P2851	Mode timer 1			Min: 0	Level
	CStat: CUT	Datatype: U16	Unit: -	Def: 0	3
	P-Group: TECH	Active: first confirm	QuickComm.: No	Max: 13	

Selects mode of timer 1. P2849, P2850, P2851 are the inputs of the timer, outputs are P2852, P2853.

Possible Settings:

0 ON delay (seconds)
1 OFF delay (seconds)
2 ON/OFF delay (seconds)
3 Pulse generator (seconds)
10 ON delay (minutes)
11 OFF delay (minutes)
12 ON/OFF delay (minutes)
13 Pulse generator (minutes)

Dependency:

P2802[0] is active level for the timer.

r2852	BO: Timer 1			Min: -	Level
		Datatype: U16	Unit: -	Def: -	3
	P-Group: TECH			Max: -	

Displays output of timer 1. P2849, P2850, P2851 are the inputs of the timer, outputs are P2852, P2853.

Dependency:

P2802[0] is active level for the timer.

r2853	BO: Nout timer 1			Min: -	Level
		Datatype: U16	Unit: -	Def: -	3
	P-Group: TECH			Max: -	

Displays Not-output of timer 1. P2849, P2850, P2851 are the inputs of the timer, outputs are P2852, P2853.

Dependency:

P2802[0] is active level for the timer.

P2854	BI: Timer 2			Min: 0:0	Level
	CStat: CUT	Datatype: U32	Unit: -	Def: 0:0	3
	P-Group: TECH	Active: first confirm	QuickComm.: No	Max: 4000:0	

Define input signal of timer 2. P2854, P2855, P2856 are the inputs of the timer, outputs are P2857, P2858.

Dependency:

P2802[1] is active level for the timer.

P2855	Delay time of timer 2			Min: 0.0	Level
	CStat: CUT	Datatype: Float	Unit: -	Def: 0.0	3
	P-Group: TECH	Active: first confirm	QuickComm.: No	Max: 9999.9	

Defines delay time of timer 2. P2854, P2855, P2856 are the inputs of the timer, outputs are P2857, P2858.

Dependency:

P2802[1] is active level for the timer.

P2856	Mode timer 2			Min: 0	Level
	CStat: CUT	Datatype: U16	Unit: -	Def: 0	3
	P-Group: TECH	Active: first confirm	QuickComm.: No	Max: 13	

Selects mode of timer 2. P2854, P2855, P2856 are the inputs of the timer, outputs are P2857, P2858.

Possible Settings:

0 ON delay (seconds)
1 OFF delay (seconds)
2 ON/OFF delay (seconds)
3 Pulse generator (seconds)
10 ON delay (minutes)
11 OFF delay (minutes)
12 ON/OFF delay (minutes)
13 Pulse generator (minutes)

Dependency:

P2802[1] is active level for the timer.

r2857	BO: Timer 2			Min: -	Level
		Datatype: U16	Unit: -	Def: -	3
	P-Group: TECH			Max: -	

Displays output of timer 2. P2854, P2855, P2856 are the inputs of the timer, outputs are P2857, P2858.

Dependency:

P2802[1] is active level for the timer.

r2858	BO: Nout timer 2			Min: -	Level
		Datatype: U16	Unit: -	Def: -	3
	P-Group: TECH			Max: -	

Displays Not-output of timer 2 P2854, P2855, P2856 are the inputs of the timer, outputs are P2857, P2858.

Dependency:

P2802[1] is active level for the timer.

P2859	**BI: Timer 3**			**Min:**	0:0	Level **3**
	CStat: CUT	**Datatype:** U32	**Unit:** -	**Def:**	0:0	
	P-Group: TECH	**Active:** first confirm	**QuickComm.:** No	**Max:**	4000:0	

Define input signal of timer 3. P2859, P2860, P2861 are the inputs of the timer, outputs are P2862, P2863.

Dependency:

P2802[2] is active level for the timer.

P2860	**Delay time of timer 3**			**Min:**	0.0	Level **3**
	CStat: CUT	**Datatype:** Float	**Unit:** -	**Def:**	0.0	
	P-Group: TECH	**Active:** first confirm	**QuickComm.:** No	**Max:**	9999.9	

Defines delay time of timer 3. P2859, P2860, P2861 are the inputs of the timer, outputs are P2862, P2863.

Dependency:

P2802[2] is active level for the timer.

P2861	**Mode timer 3**			**Min:**	0	Level **3**
	CStat: CUT	**Datatype:** U16	**Unit:** -	**Def:**	0	
	P-Group: TECH	**Active:** first confirm	**QuickComm.:** No	**Max:**	13	

Selects mode of timer 3. P2859, P2860, P2861 are the inputs of the timer, outputs are P2862, P2863.

Possible Settings:

0 ON delay (seconds)
1 OFF delay (seconds)
2 ON/OFF delay (seconds)
3 Pulse generator (seconds)
10 ON delay (minutes)
11 OFF delay (minutes)
12 ON/OFF delay (minutes)
13 Pulse generator (minutes)

Dependency:

P2802[2] is active level for the timer.

r2862	**BO: Timer 3**			**Min:**	-	Level **3**
		Datatype: U16	**Unit:** -	**Def:**	-	
	P-Group: TECH			**Max:**	-	

Displays output of timer 3. P2859, P2860, P2861 are the inputs of the timer, outputs are P2862, P2863.

Dependency:

P2802[2] is active level for the timer.

r2863	**BO: Nout timer 3**			**Min:**	-	Level **3**
		Datatype: U16	**Unit:** -	**Def:**	-	
	P-Group: TECH			**Max:**	-	

Displays Not-output of timer 3. P2859, P2860, P2861 are the inputs of the timer, outputs are P2862, P2863.

Dependency:

P2802[2] is active level for the timer.

P2864	**BI: Timer 4**			**Min:**	0:0	Level **3**
	CStat: CUT	**Datatype:** U32	**Unit:** -	**Def:**	0:0	
	P-Group: TECH	**Active:** first confirm	**QuickComm.:** No	**Max:**	4000:0	

Define input signal of timer 4. P2864, P2865, P2866 are the inputs of the timer, outputs are P2867, P2868.

Dependency:

P2802[3] is active level for the timer.

P2865	**Delay time of timer 4**			**Min:**	0.0	Level **3**
	CStat: CUT	**Datatype:** Float	**Unit:** -	**Def:**	0.0	
	P-Group: TECH	**Active:** first confirm	**QuickComm.:** No	**Max:**	9999.9	

Defines delay time of timer 4. P2864, P2865, P2866 are the inputs of the timer, outputs are P2867, P2868.

Dependency:

P2802[3] is active level for the timer.

P2866	**Mode timer 4**			**Min:**	0	Level **3**
	CStat: CUT	**Datatype:** U16	**Unit:** -	**Def:**	0	
	P-Group: TECH	**Active:** first confirm	**QuickComm.:** No	**Max:**	13	

Selects mode of timer 4. P2864, P2865, P2866 are the inputs of the timer, outputs are P2867, P2868.

Possible Settings:

0 ON delay (seconds)
1 OFF delay (seconds)
2 ON/OFF delay (seconds)
3 Pulse generator (seconds)
10 ON delay (minutes)
11 OFF delay (minutes)
12 ON/OFF delay (minutes)
13 Pulse generator (minutes)

Dependency:

P2802[3] is active level for the timer.

r2867	BO: Timer 4			Min: -	Level
		Datatype: U16	Unit: -	Def: -	3
	P-Group: TECH			Max: -	

Displays output of timer 4. P2864, P2865, P2866 are the inputs of the timer, outputs are P2867, P2868.

Dependency:

P2802[3] is active level for the timer.

r2868	BO: Nout timer 4			Min: -	Level
		Datatype: U16	Unit: -	Def: -	3
	P-Group: TECH			Max: -	

Displays Not-output of timer 4. P2864, P2865, P2866 are the inputs of the timer, outputs are P2867, P2868.

Dependency:

P2802[3] is active level for the timer.

P2869[2]	CI: ADD 1			Min: 0:0	Level
	CStat: CUT	Datatype: U32	Unit: -	Def: 755:0	3
	P-Group: TECH	Active: first confirm	QuickComm.: No	Max: 4000:0	

Define inputs of Adder 1, result is in P2870.

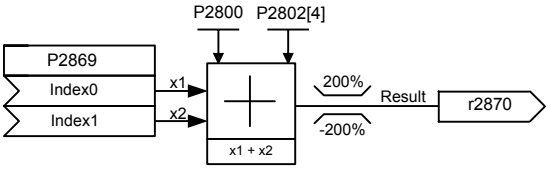

Result = x1 + x2

If: x1 + x2 > 200% → Result = 200%
x1 + x2 < -200% → Result = -200%

Index:

P2869[0] : Connector input 0 (CI 0)
P2869[1] : Connector input 1 (CI 1)

Dependency:

P2802[4] is the active level for the Adder.

r2870	CO: ADD 1			Min: -	Level
		Datatype: Float	Unit: %	Def: -	3
	P-Group: TECH			Max: -	

Result of Adder 1.

Dependency:

P2802[4] is active level for the Adder.

P2871[2]	CI: ADD 2			Min: 0:0	Level
	CStat: CUT	Datatype: U32	Unit: -	Def: 755:0	3
	P-Group: TECH	Active: first confirm	QuickComm.: No	Max: 4000:0	

Define inputs of Adder 2, result is in P2872.

Index:

P2871[0] : Connector input 0 (CI 0)
P2871[1] : Connector input 1 (CI 1)

Dependency:

P2802[5] is active level for the Adder.

r2872	CO: ADD 2			Min: -	Level
		Datatype: Float	Unit: %	Def: -	3
	P-Group: TECH			Max: -	

Result of Adder 2.

Dependency:

P2802[5] is active level for the Adder.

P2873[2]	CI: SUB 1			Min: 0:0	Level
	CStat: CUT	Datatype: U32	Unit: -	Def: 755:0	3
	P-Group: TECH	Active: first confirm	QuickComm.: No	Max: 4000:0	

Define inputs of Subtracter 1, result is in P2874.

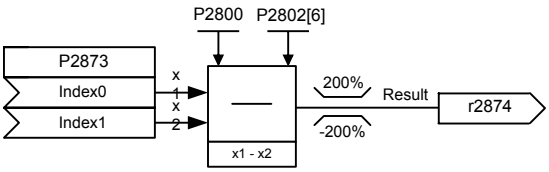

Result = x1 - x2

If: x1 - x2 > 200% → Result = 200%
x1 - x2 < -200% → Result = -200%

Index:

P2873[0] : Connector input 0 (CI 0)
P2873[1] : Connector input 1 (CI 1)

Dependency:

P2802[6] is active level for the Subtracter.

r2874	**CO: SUB 1**			**Min:** -		Level
		Datatype: Float	**Unit:** %	**Def:** -		**3**
	P-Group: TECH			**Max:** -		

Result of Subtracter 1.

Dependency:

P2802[6] is active level for the Subtracter.

P2875[2]	**CI: SUB 2**			**Min:** 0:0		Level
	CStat: CUT	**Datatype:** U32	**Unit:** -	**Def:** 755:0		**3**
	P-Group: TECH	**Active:** first confirm	**QuickComm.:** No	**Max:** 4000:0		

Define inputs of Subtracter 2, result is in P2876.

Index:

P2875[0] : Connector input 0 (CI 0)
P2875[1] : Connector input 1 (CI 1)

Dependency:

P2802[7] is active level for the Subtracter.

r2876	**CO: SUB 2**			**Min:** -		Level
		Datatype: Float	**Unit:** %	**Def:** -		**3**
	P-Group: TECH			**Max:** -		

Result of Subtracter 2.

Dependency:

P2802[7] is active level for the Subtracter.

P2877[2]	**CI: MUL 1**			**Min:** 0:0		Level
	CStat: CUT	**Datatype:** U32	**Unit:** -	**Def:** 755:0		**3**
	P-Group: TECH	**Active:** first confirm	**QuickComm.:** No	**Max:** 4000:0		

Define inputs of Multiplier 1, result is in P2878.

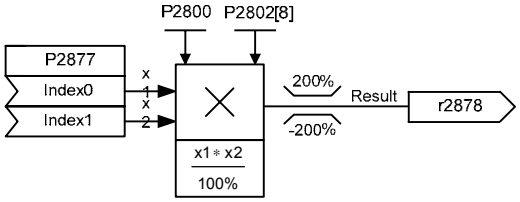

$$\text{Result} = \frac{x1 * x2}{100\%}$$

If: $\frac{x1 * x2}{100\%} > 200\% \rightarrow$ Result = 200%

$\frac{x1 * x2}{100\%} < -200\% \rightarrow$ Result = -200%

Index:

P2877[0] : Connector input 0 (CI 0)
P2877[1] : Connector input 1 (CI 1)

Dependency:

P2802[8] is active level for the Multiplier.

r2878	**CO: MUL 1**			**Min:** -		Level
		Datatype: Float	**Unit:** %	**Def:** -		**3**
	P-Group: TECH			**Max:** -		

Result of Multiplier 1.

Dependency:

P2802[8] is active level for the Multiplier.

P2879[2]	**CI: MUL 2**			**Min:** 0:0		Level
	CStat: CUT	**Datatype:** U32	**Unit:** -	**Def:** 755:0		**3**
	P-Group: TECH	**Active:** first confirm	**QuickComm.:** No	**Max:** 4000:0		

Define inputs of Multiplier 2, result is in P2880.

Index:

P2879[0] : Connector input 0 (CI 0)
P2879[1] : Connector input 1 (CI 1)

Dependency:

P2802[9] is active level for the Multiplier.

r2880	**CO: MUL 2**			**Min:** -		Level
		Datatype: Float	**Unit:** %	**Def:** -		**3**
	P-Group: TECH			**Max:** -		

Result of Multiplier 2.

Dependency:

P2802[9] is active level for the Multiplier.

P2881[2]	**CI: DIV 1**			**Min:** 0:0	Level
	CStat: CUT	**Datatype:** U32	**Unit:** -	**Def:** 755:0	**3**
	P-Group: TECH	**Active:** first confirm	**QuickComm.:** No	**Max:** 4000:0	

Define inputs of Divider 1, result is in P2882.

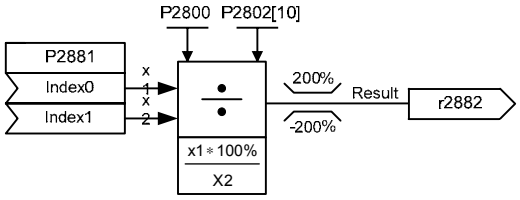

$$\textbf{Result} = \frac{x1 * 100\%}{x2}$$

If: $\frac{x1 * 100\%}{x2} > 200\% \rightarrow$ Result = 200%

$\frac{x1 * 100\%}{x2} < -200\% \rightarrow$ Result = -200%

Index:

P2881[0] : Connector input 0 (CI 0)
P2881[1] : Connector input 1 (CI 1)

Dependency:

P2802[10] is active level for the Divider.

r2882	**CO: DIV 1**			**Min:** -	Level
		Datatype: Float	**Unit:** %	**Def:** -	**3**
	P-Group: TECH			**Max:** -	

Result of Divider 1.

Dependency:

P2802[10] is active level for the Divider.

P2883[2]	**CI: DIV 2**			**Min:** 0:0	Level
	CStat: CUT	**Datatype:** U32	**Unit:** -	**Def:** 755:0	**3**
	P-Group: TECH	**Active:** first confirm	**QuickComm.:** No	**Max:** 4000:0	

Define inputs of Divider 2, result is in P2884.

Index:

P2883[0] : Connector input 0 (CI 0)
P2883[1] : Connector input 1 (CI 1)

Dependency:

P2802[11] is active level for the Divider.

r2884	**CO: DIV 2**			**Min:** -	Level
		Datatype: Float	**Unit:** %	**Def:** -	**3**
	P-Group: TECH			**Max:** -	

Result of Divider 2.

Dependency:

P2802[11] is active level for the Divider.

P2885[2]	**CI: CMP 1**			**Min:** 0:0	Level
	CStat: CUT	**Datatype:** U32	**Unit:** -	**Def:** 755:0	**3**
	P-Group: TECH	**Active:** first confirm	**QuickComm.:** No	**Max:** 4000:0	

Defines inputs of Comparator 1, output is P2886.

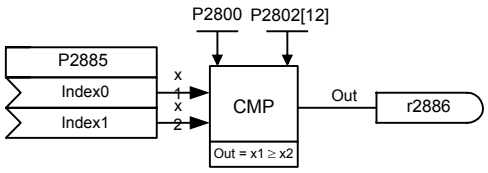

$x1 \geq x2 \rightarrow$ Out = 1
$x1 < x2 \rightarrow$ Out = 0

Index:

P2885[0] : Connector input 0 (CI 0)
P2885[1] : Connector input 1 (CI 1)

Note:

The inputs are limited to +/-200 % of the related reference value.

Dependency:

P2802[12] is active level for the Comparator.

r2886	**BO: CMP 1**			**Min:** -	Level
		Datatype: U16	**Unit:** -	**Def:** -	**3**
	P-Group: TECH			**Max:** -	

Displays result bit of Comparator 1.

Dependency:

P2802[12] is active level for the Comparator.

P2887[2]	**CI: CMP 2**				**Min:**	0:0	Level **3**
	CStat:	CUT	**Datatype:** U32	**Unit:** -	**Def:**	755:0	
	P-Group:	TECH	**Active:** first confirm	**QuickComm.:** No	**Max:**	4000:0	

Defines inputs of Comparator 2, output is P2888.

Index:

P2887[0] : Connector input 0 (CI 0)
P2887[1] : Connector input 1 (CI 1)

Note:

The inputs are limited to +/-200 % of the related reference value.

Dependency:

P2802[13] is active level for the Comparator.

r2888	**BO: CMP 2**				**Min:**	-	Level **3**
			Datatype: U16	**Unit:** -	**Def:**	-	
	P-Group:	TECH			**Max:**	-	

Displays result bit of Comparator 2.

Dependency:

P2802[13] is active level for the Comparator.

P2889	**CO: Fixed setpoint 1 in [%]**				**Min:**	-200.00	Level **3**
	CStat:	CUT	**Datatype:** Float	**Unit:** %	**Def:**	0.00	
	P-Group:	TECH	**Active:** first confirm	**QuickComm.:** No	**Max:**	200.00	

Fixed percent setting 1.

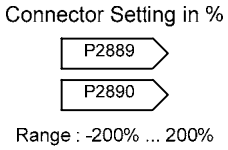

P2890	**CO: Fixed setpoint 2 in [%]**				**Min:**	-200.00	Level **3**
	CStat:	CUT	**Datatype:** Float	**Unit:** %	**Def:**	0.00	
	P-Group:	TECH	**Active:** first confirm	**QuickComm.:** No	**Max:**	200.00	

Fixed percent setting 2.

3.40 Inverter parameters

P3900	End of quick commissioning			Min: 0	Level
	CStat: C	Datatype: U16	Unit: -	Def: 0	1
	P-Group: QUICK	Active: first confirm	QuickComm.: Yes	Max: 3	

Performs calculations necessary for optimized motor operation.

After completion of calculation, P3900 and P0010 (parameter groups for commissioning) are automatically reset to their original value 0.

Possible Settings:

0 No quick commissioning
1 Start quick commissioning with factory reset
2 Start quick commissioning
3 Start quick commissioning only for motor data

Dependency:

Changeable only when P0010 = 1 (quick commissioning)

Note:

P3900 = 1 :
When setting 1 is selected, only the parameter settings carried out via the commissioning menu "Quick commissioning", are retained; all other parameter changes, including the I/O settings, are lost. Motor calculations are also performed.

P3900 = 2 :
When setting 2 is selected, only those parameters, which depend on the parameters in the commissioning menu "Quick commissioning" (P0010 = 1) are calculated. The I/O settings are also reset to default and the motor calculations performed.

P3900 = 3 :
When setting 3 is selected, only the motor and controller calculations are performed. Exiting quick commissioning with this setting saves time (for example, if only motor rating plate data have been changed).

Calculates a variety of motor parameters, overwriting previous values (see parameter P0340, setting P0340 = 1).

4 Function Diagrams

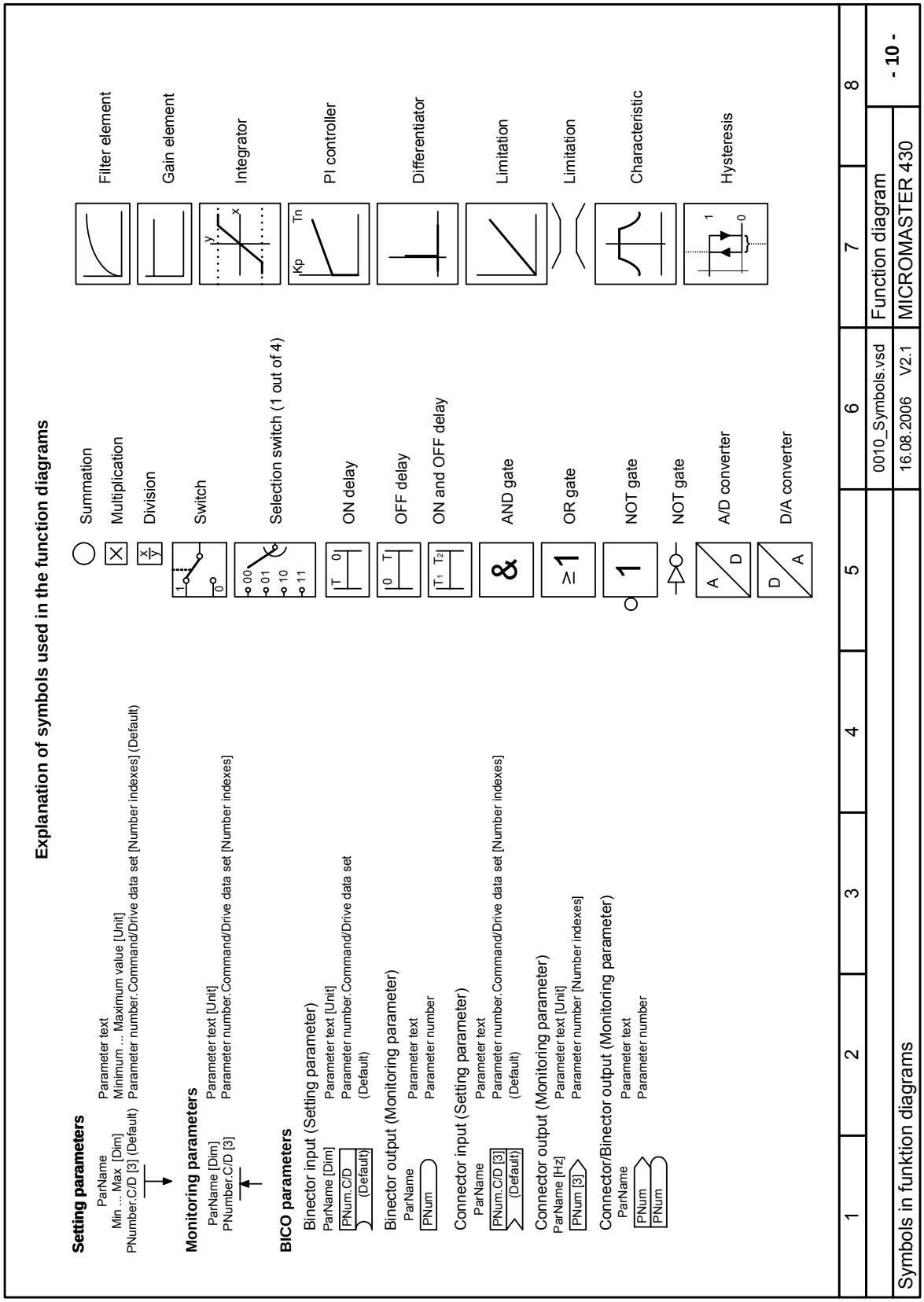

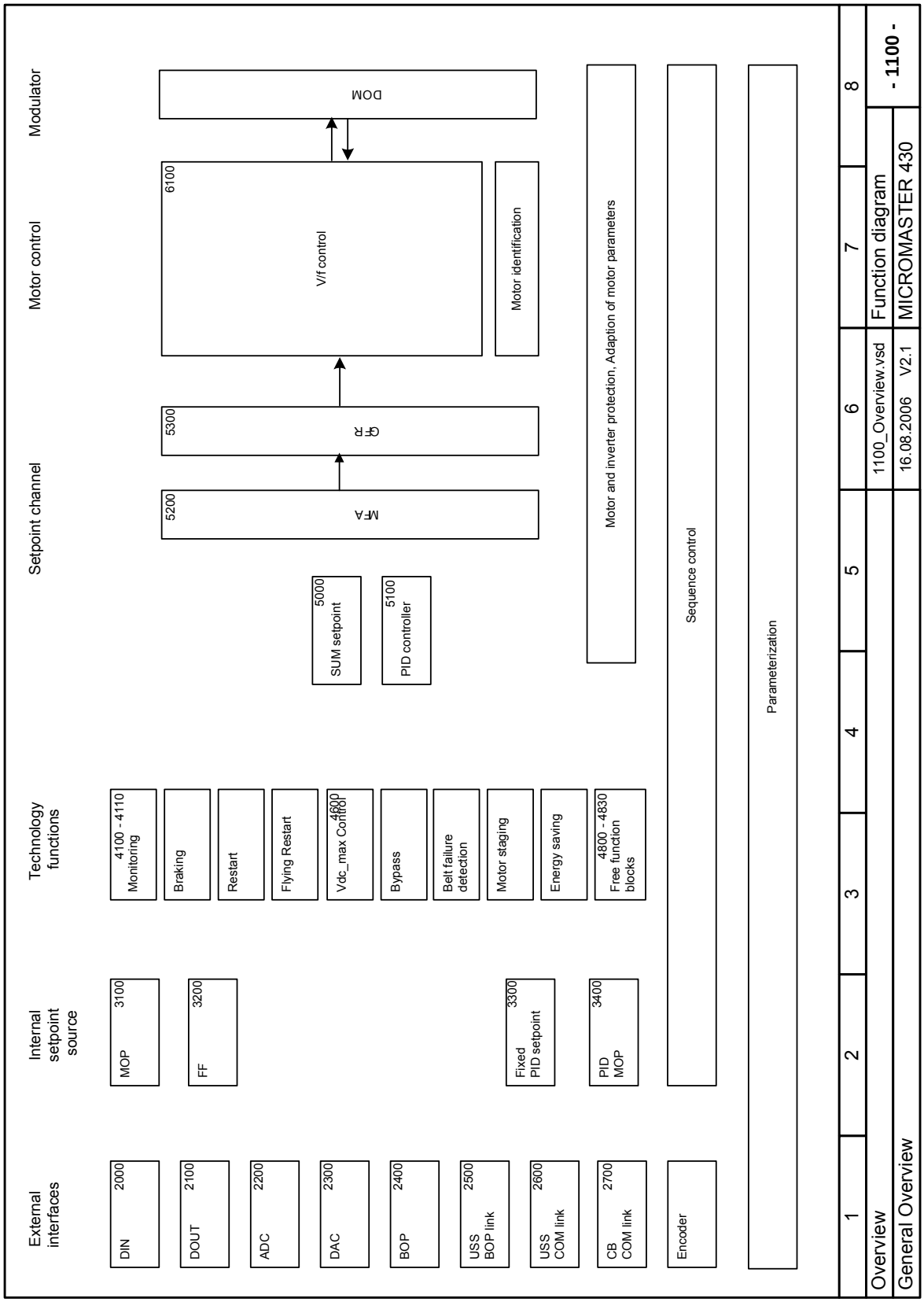
External interfaces
Internal setpoint source
Technology functions
Setpoint channel
Motor control
Modulator
DIN 2000
DOUT 2100
ADC 2200
DAC 2300
BOP 2400
USS BOP link 2500
USS COM link 2600
CB COM link 2700
Encoder
MOP 3100
FF 3200
Fixed PID setpoint 3300
PID MOP 3400
4100 - 4110 Monitoring
Braking
Restart
Flying Restart
Vdc_max Control 4600
Bypass
Belt failure detection
Motor staging
Energy saving
4800 - 4830 Free function blocks
5000 SUM setpoint
5100 PID controller
5200 MFA
5300 GFR
6100 V/f control
DOM
Motor identification
Motor and inverter protection, Adaption of motor parameters
Sequence control
Parameterization
1 2 3 4 5 6 7 8
Overview
1100_Overview.vsd
Function diagram
- 1100 -
General Overview
16.08.2006 V2.1
MICROMASTER 430

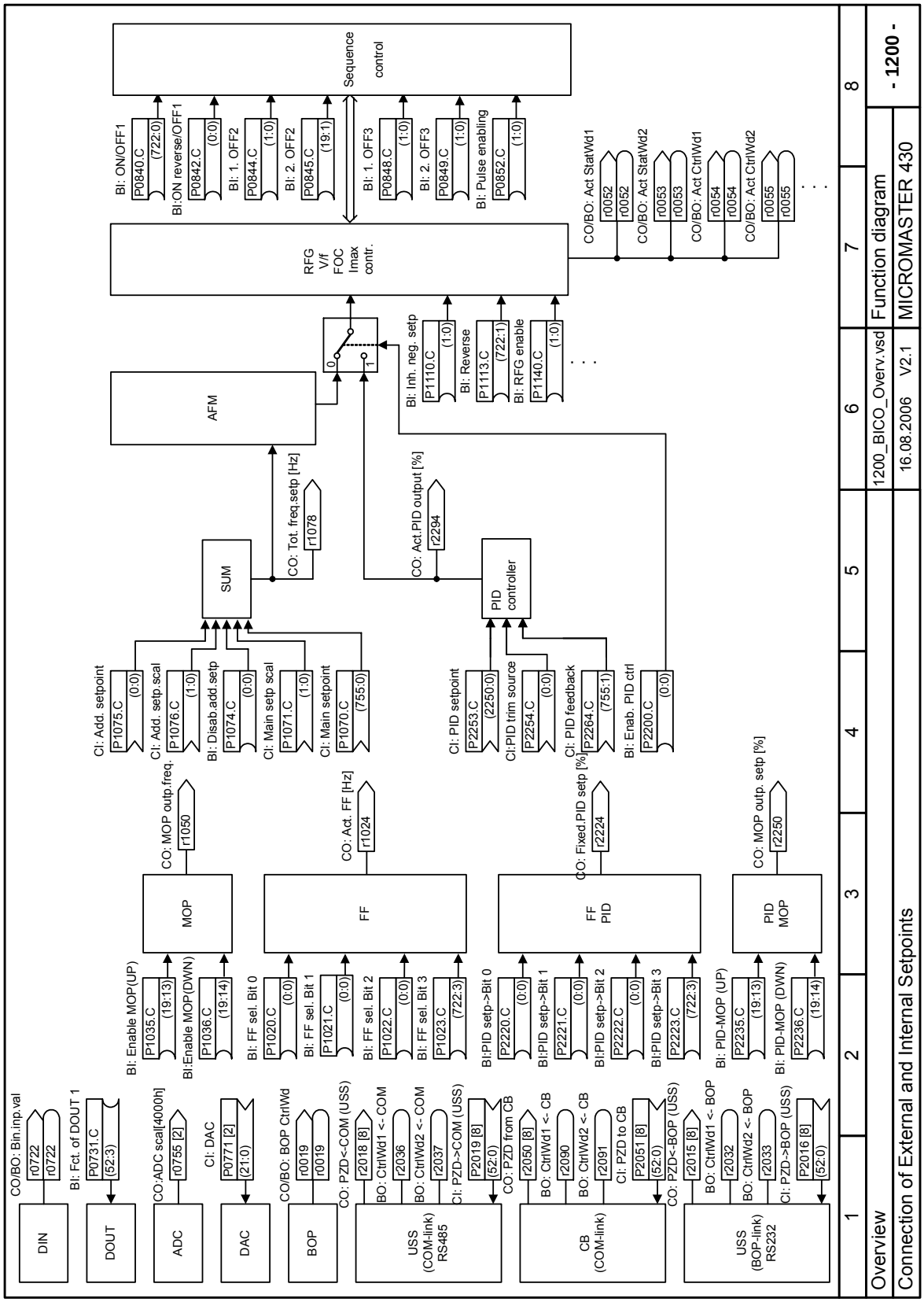
Sequence control
BI: ON/OFF1
P0840.C (722:0)
BI:ON reverse/OFF1
P0842.C (0:0)
BI: 1. OFF2
P0844.C (1:0)
BI: 2. OFF2
P0845.C (19:1)
BI: 1. OFF3
P0848.C (1:0)
BI: 2. OFF3
P0849.C (1:0)
BI: Pulse enabling
P0852.C (1:0)
RFG
V/f
FOC
Imax
contr.
CO/BO: Act StatWd1
r0052
CO/BO: Act StatWd2
r0053
CO/BO: Act CtrlWd1
r0054
CO/BO: Act CtrlWd2
r0055
AFM
BI: Inh. neg. setp
P1110.C (1:0)
BI: Reverse
P1113.C (722:1)
BI: RFG enable
P1140.C (1:0)
SUM
CO: Tot. freq.setp [Hz]
r1078
CO: Act.PID output [%]
r2294
PID controller
CI: Add. setpoint
P1075.C (0:0)
CI: Add. setp.scal
P1076.C (1:0)
BI: Disab.add.setp
P1074.C (0:0)
CI: Main setp scal
P1071.C (1:0)
CI: Main setpoint
P1070.C (755:0)
CI: PID setpoint
P2253.C (2250:0)
CI:PID trim source
P2254.C (0:0)
CI: PID feedback
P2264.C (755:1)
BI: Enab. PID ctrl
P2200.C (0:0)
CO: MOP outp.freq.
r1050
CO: Act. FF [Hz]
r1024
CO: Fixed.PID setp [%]
r2224
CO: MOP outp. setp [%]
r2250
MOP
FF
FF PID
PID MOP
BI: Enable MOP(UP)
P1035.C (19:13)
BI:Enable MOP(DWN)
P1036.C (19:14)
BI: FF sel. Bit 0
P1020.C (0:0)
BI: FF sel. Bit 1
P1021.C (0:0)
BI: FF sel. Bit 2
P1022.C (0:0)
BI: FF sel. Bit 3
P1023.C (722:3)
BI:PID setp->Bit 0
P2220.C (0:0)
BI:PID setp->Bit 1
P2221.C (0:0)
BI:PID setp->Bit 2
P2222.C (0:0)
BI:PID setp->Bit 3
P2223.C (722:3)
BI: PID-MOP (UP)
P2235.C (19:13)
BI: PID-MOP (DWN)
P2236.C (19:14)
CO/BO: Bin.inp.val
r0722
BI: Fct. of DOUT 1
P0731.C (52:3)
CO:ADC scal[4000h]
r0755 [2]
CI: DAC
P0771 [2] (21:0)
CO/BO: BOP CtrlWd
r0019
CO: PZD<-COM (USS)
r2018 [8]
BO: CtrlWd1 <- COM
r2036
BO: CtrlWd2 <- COM
r2037
CI: PZD->COM (USS)
P2019 [8] (52:0)
CO: PZD from CB
r2050 [8]
BO: CtrlWd1 <- CB
r2090
BO: CtrlWd2 <- CB
r2091
CI: PZD to CB
P2051 [8] (52:0)
CO: PZD<-BOP (USS)
r2015 [8]
BO: CtrlWd1 <- BOP
r2032
BO: CtrlWd2 <- BOP
r2033
CI: PZD->BOP (USS)
P2016 [8] (52:0)
DIN
DOUT
ADC
DAC
BOP
USS (COM-link) RS485
CB (COM-link)
USS (BOP-link) RS232
1 2 3 4 5 6 7 8
Overview
Connection of External and Internal Setpoints
1200_BICO_Overv.vsd
16.08.2006 V2.1
Function diagram
MICROMASTER 430
- 1200 -

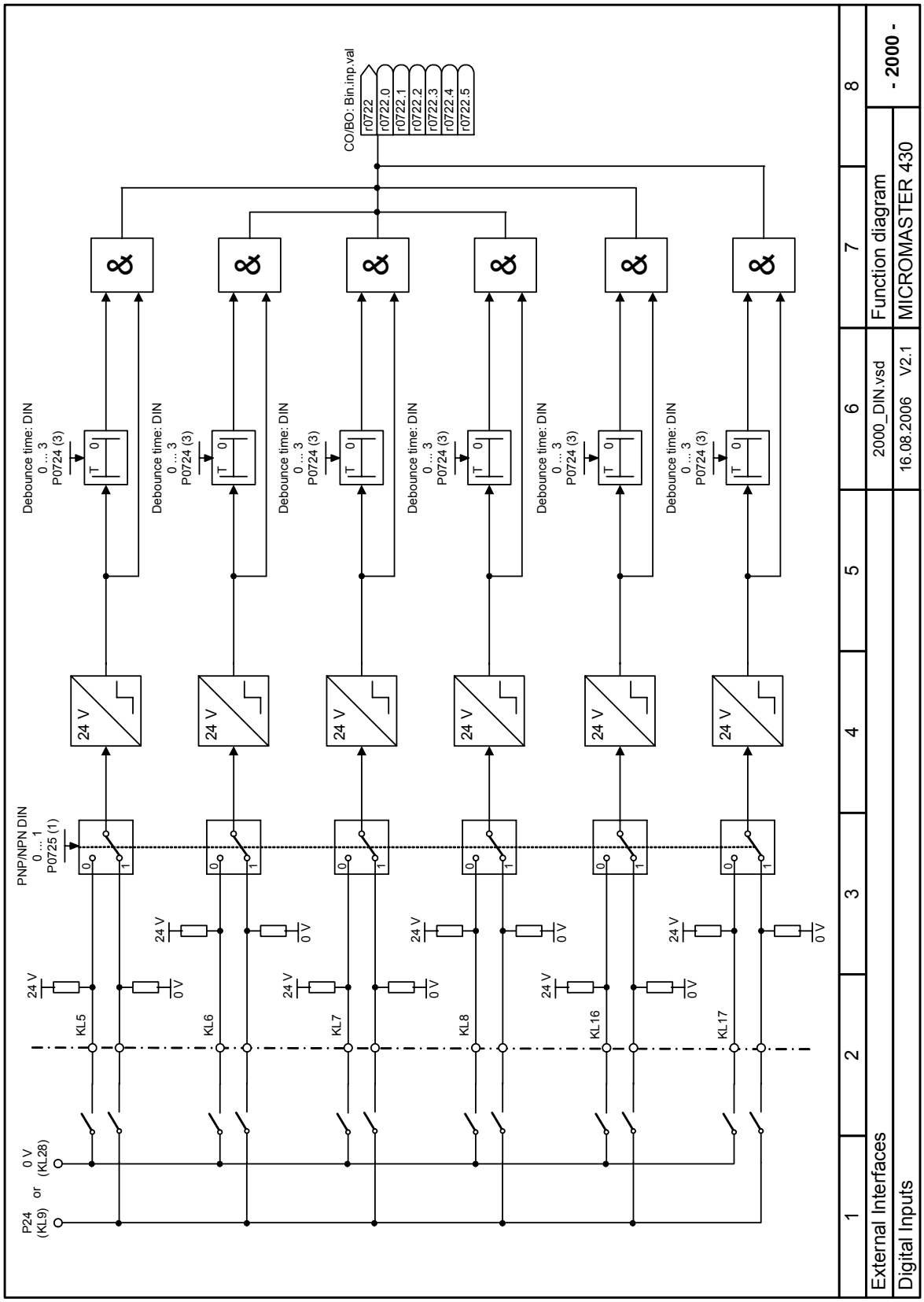
CO/BO: Bin.inp.val
r0722
r0722.0
r0722.1
r0722.2
r0722.3
r0722.4
r0722.5
Debounce time: DIN
0 ... 3
P0724 (3)
24 V
PNP/NPN DIN
0 ... 1
P0725 (1)
0 V
0 V
(KL28)
or
P24
(KL9)
KL5
KL6
KL7
KL8
KL16
KL17
1
2
3
4
5
6
7
8
External Interfaces
Digital Inputs
2000_DIN.vsd
16.08.2006
V2.1
Function diagram
MICROMASTER 430
- 2000 -

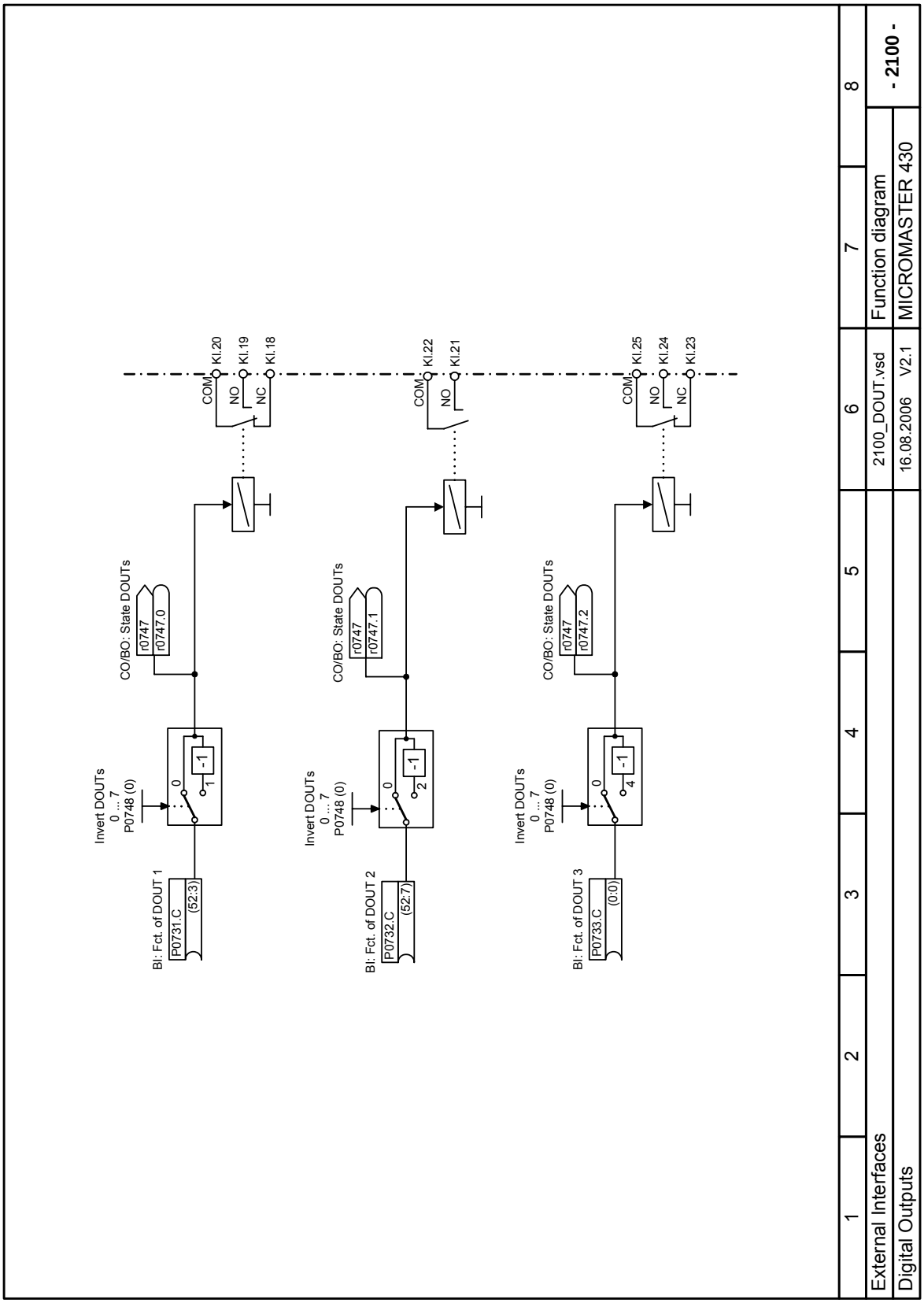
Invert DOUTs 0 ... 7 P0748 (0)
BI: Fct. of DOUT 1
P0731.C
(52:3)
CO/BO: State DOUTs
r0747
r0747.0
COM
NO
NC
KI.20
KI.19
KI.18
Invert DOUTs 0 ... 7 P0748 (0)
BI: Fct. of DOUT 2
P0732.C
(52:7)
CO/BO: State DOUTs
r0747
r0747.1
COM
NO
KI.22
KI.21
Invert DOUTs 0 ... 7 P0748 (0)
BI: Fct. of DOUT 3
P0733.C
(0:0)
CO/BO: State DOUTs
r0747
r0747.2
COM
NO
NC
KI.25
KI.24
KI.23
1 2 3 4 5 6 7 8
External Interfaces
Digital Outputs
2100_DOUT.vsd
16.08.2006 V2.1
Function diagram
MICROMASTER 430
- 2100 -

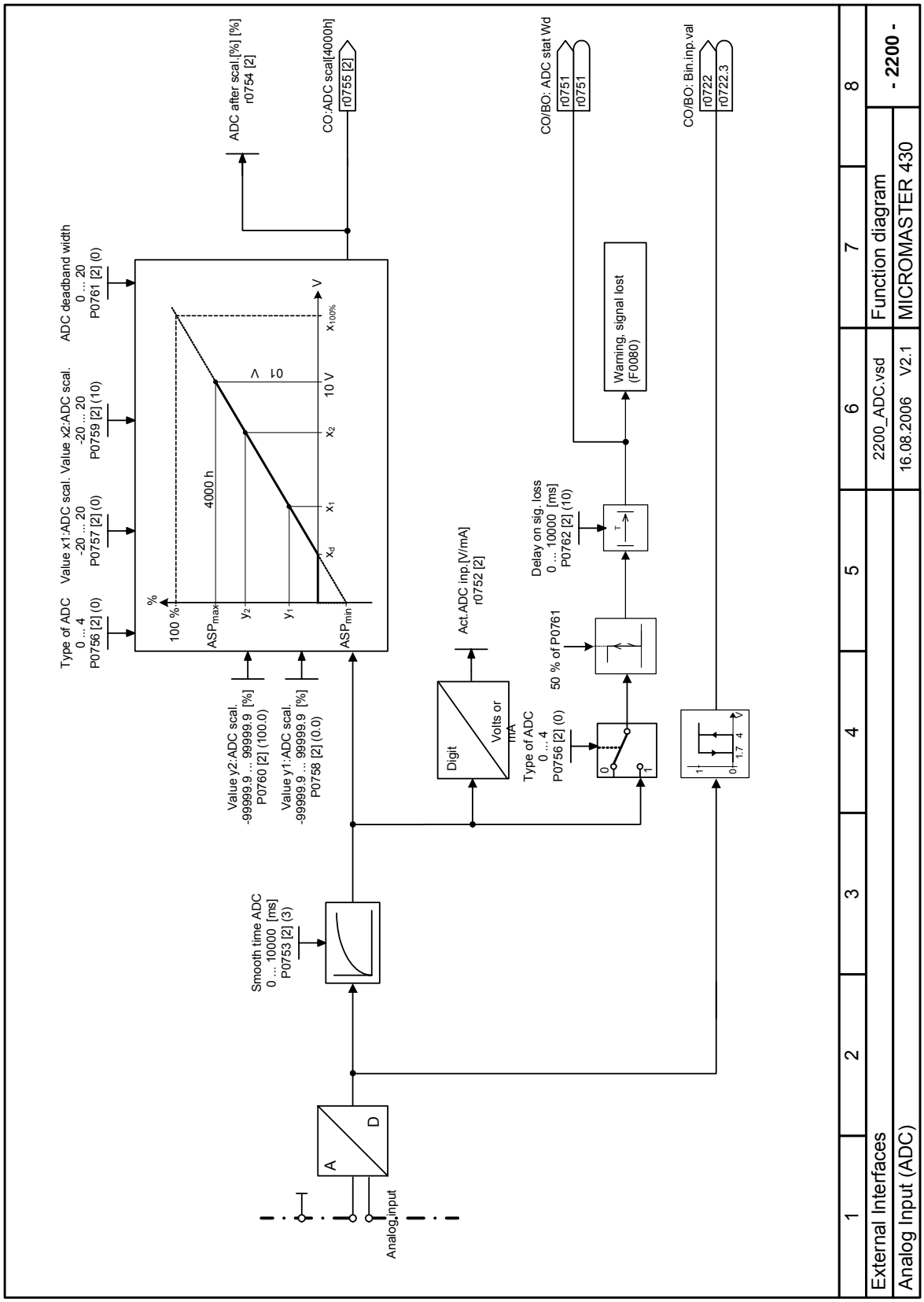
Type of ADC
0 ... 4
P0756 [2] (0)
Value x1:ADC scal.
-20 ... 20
P0757 [2] (0)
Value x2:ADC scal.
-20 ... 20
P0759 [2] (10)
ADC deadband width
0 ... 20
P0761 [2] (0)
%
100 %
ASPmax
y2
y1
ASPmin
4000 h
x0
x1
x2
10 V
V
x100%
ADC after scal.[%] [%]
r0754 [2]
CO:ADC scal[4000h]
r0755 [2]
Value y2:ADC scal.
-99999.9 ... 99999.9 [%]
P0760 [2] (100.0)
Value y1:ADC scal.
-99999.9 ... 99999.9 [%]
P0758 [2] (0.0)
Smooth time ADC
0 ... 10000 [ms]
P0753 [2] (3)
A
D
Analog input
Act.ADC inp.[V/mA]
r0752 [2]
Digit
Volts or mA
Type of ADC
0 ... 4
P0756 [2] (0)
50 % of P0761
Delay on sig. loss
0 ... 10000 [ms]
P0762 [2] (10)
Warning, signal lost
(F0080)
CO/BO: ADC stat Wd
r0751
r0751
CO/BO: Bin.inp.val
r0722
r0722.3
1.7
4
V
1
2
3
4
5
6
7
8
External Interfaces
Analog Input (ADC)
2200_ADC.vsd
16.08.2006
V2.1
Function diagram
MICROMASTER 430
- 2200 -

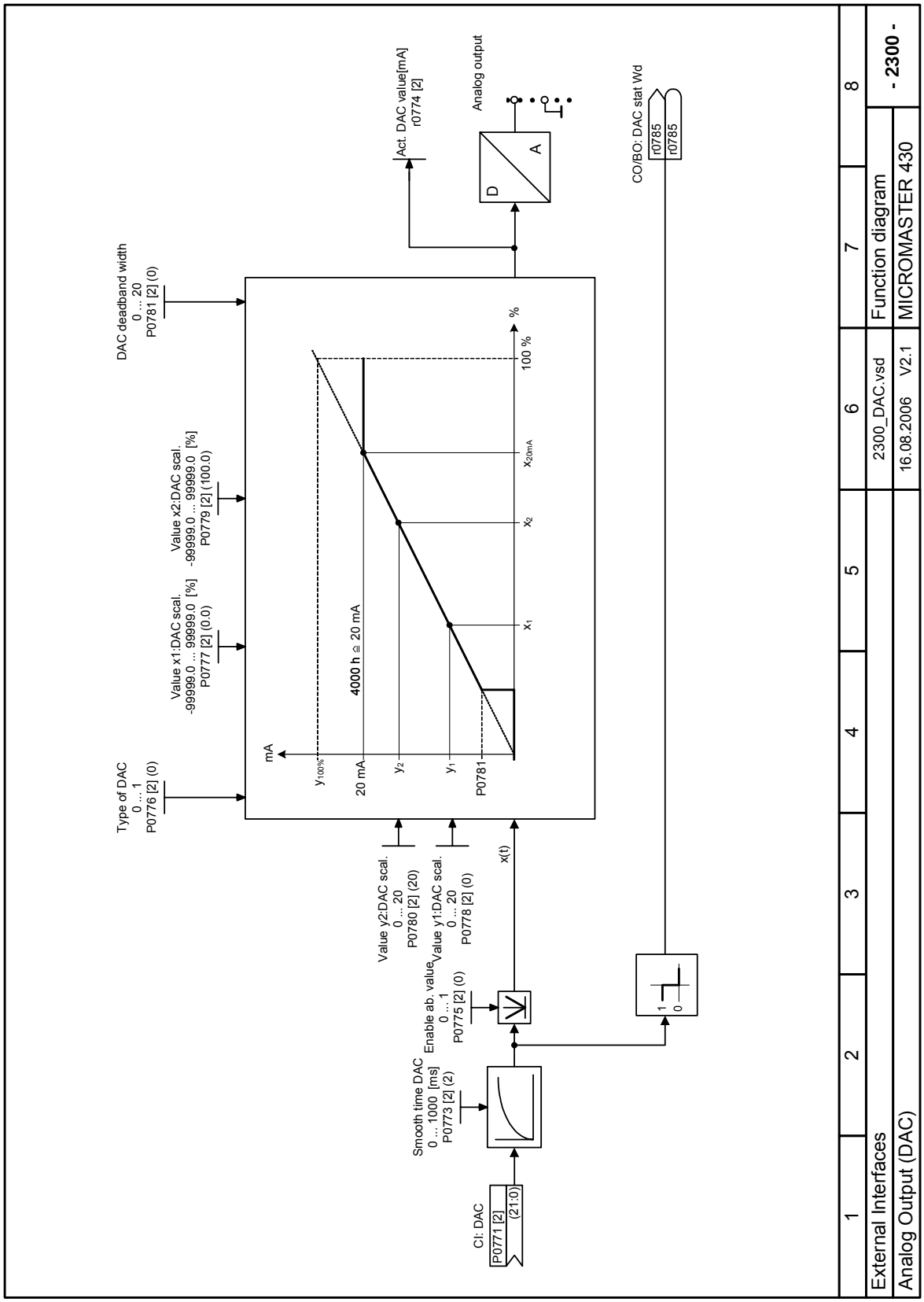
Type of DAC
0 ... 1
P0776 [2] (0)
Value x1:DAC scal.
-99999.0 ... 99999.0 [%]
P0777 [2] (0.0)
Value x2:DAC scal.
-99999.0 ... 99999.0 [%]
P0779 [2] (100.0)
DAC deadband width
0 ... 20
P0781 [2] (0)
mA
y100%
20 mA
y2
y1
P0781
4000 h ≙ 20 mA
x1
x2
x20mA
100 %
%
Act. DAC value[mA]
r0774 [2]
Analog output
D
A
CO/BO: DAC stat Wd
r0785
r0785
CI: DAC
P0771 [2]
(21:0)
Smooth time DAC
0 ... 1000 [ms]
P0773 [2] (2)
Enable ab. value
0 ... 1
P0775 [2] (0)
Value y1:DAC scal.
0 ... 20
P0778 [2] (0)
Value y2:DAC scal.
0 ... 20
P0780 [2] (20)
x(t)
1
0
1
2
3
4
5
6
7
8
External Interfaces
Analog Output (DAC)
2300_DAC.vsd
16.08.2006 V2.1
Function diagram
MICROMASTER 430
- 2300 -

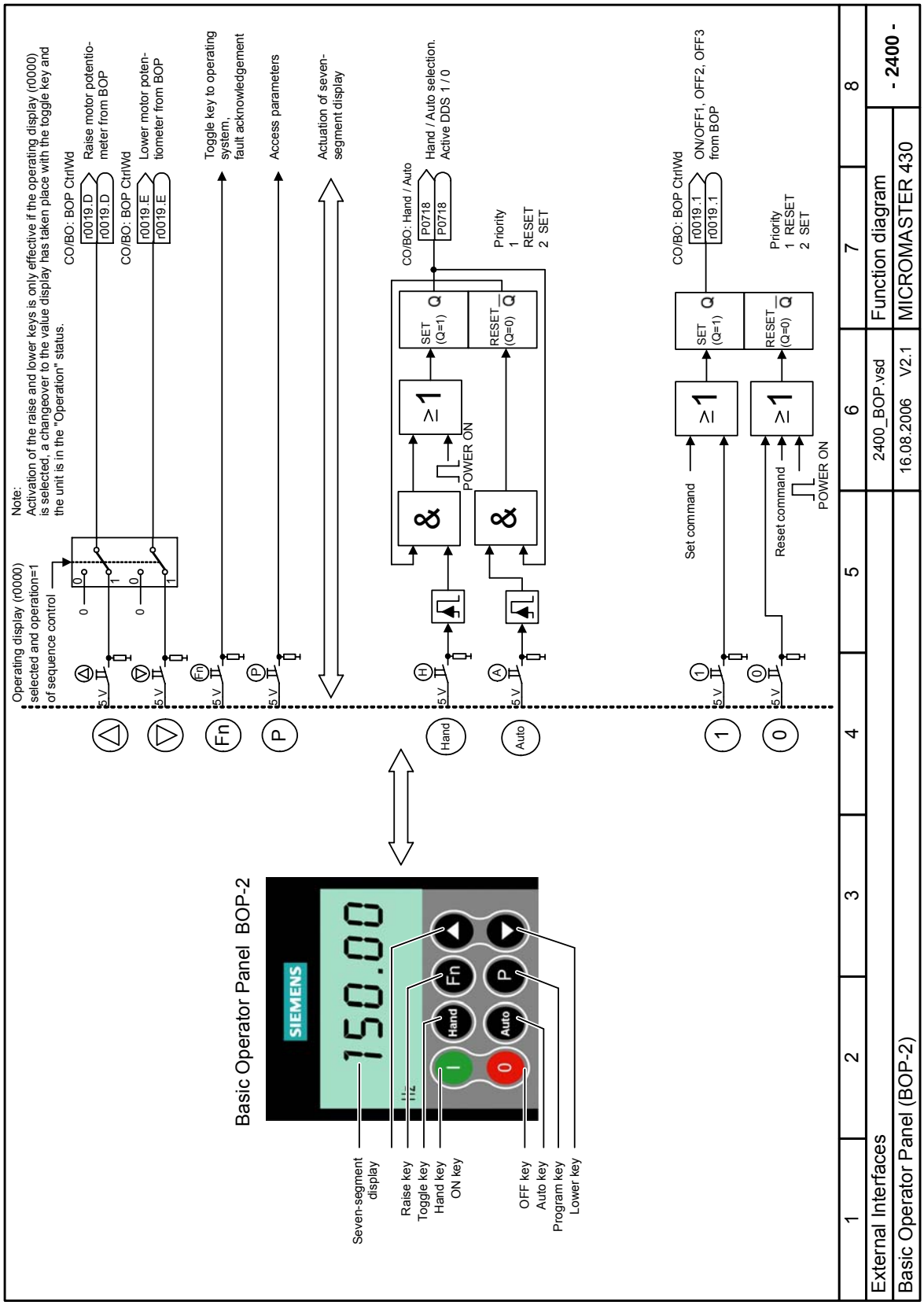
Note:
Activation of the raise and lower keys is only effective if the operating display (r0000) is selected, a changeover to the value display has taken place with the toggle key and the unit is in the "Operation" status.
Operating display (r0000) selected and operation=1 of sequence control
CO/BO: BOP CtrlWd
r0019.D
Raise motor potentio-meter from BOP
CO/BO: BOP CtrlWd
r0019.E
Lower motor poten-tiometer from BOP
Toggle key to operating system, fault acknowledgement
Access parameters
Actuation of seven-segment display
CO/BO: Hand / Auto
P0718
Hand / Auto selection. Active DDS 1 / 0
Priority
1 RESET
2 SET
SET (Q=1)
RESET (Q=0)
POWER ON
CO/BO: BOP CtrlWd
r0019.1
ON/OFF1, OFF2, OFF3 from BOP
Set command
Reset command
Basic Operator Panel BOP-2
SIEMENS
150.00
Seven-segment display
Raise key
Toggle key
Hand key
ON key
OFF key
Auto key
Program key
Lower key
External Interfaces
Basic Operator Panel (BOP-2)
2400_BOP.vsd
16.08.2006 V2.1
Function diagram
MICROMASTER 430
- 2400 -

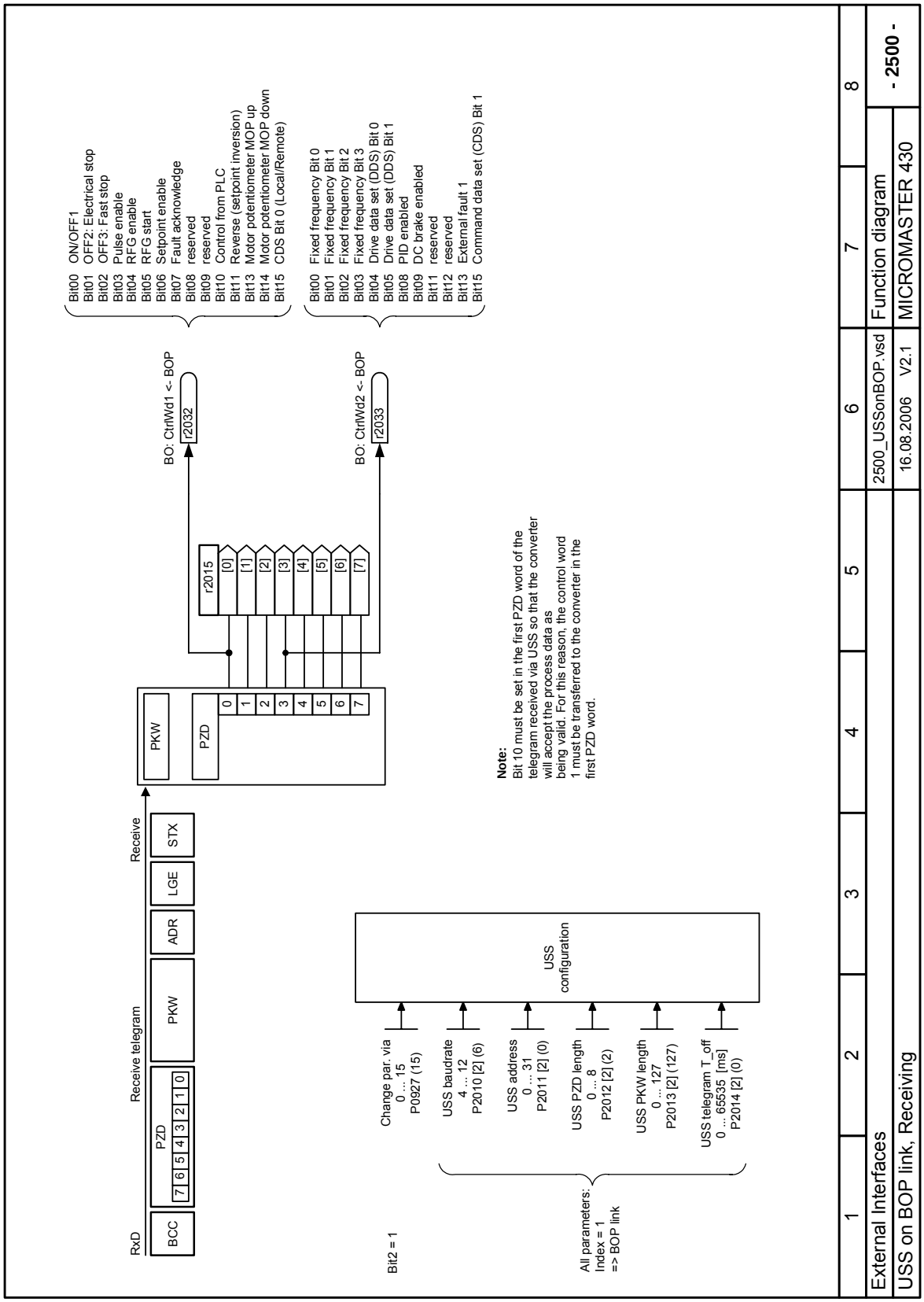
Bit00 ON/OFF1
Bit01 OFF2: Electrical stop
Bit02 OFF3: Fast stop
Bit03 Pulse enable
Bit04 RFG enable
Bit05 RFG start
Bit06 Setpoint enable
Bit07 Fault acknowledge
Bit08 reserved
Bit09 reserved
Bit10 Control from PLC
Bit11 Reverse (setpoint inversion)
Bit13 Motor potentiometer MOP up
Bit14 Motor potentiometer MOP down
Bit15 CDS Bit 0 (Local/Remote)
Bit00 Fixed frequency Bit 0
Bit01 Fixed frequency Bit 1
Bit02 Fixed frequency Bit 2
Bit03 Fixed frequency Bit 3
Bit04 Drive data set (DDS) Bit 0
Bit05 Drive data set (DDS) Bit 1
Bit08 PID enabled
Bit09 DC brake enabled
Bit11 reserved
Bit12 reserved
Bit13 External fault 1
Bit15 Command data set (CDS) Bit 1
BO: CtrlWd1 <- BOP
r2032
BO: CtrlWd2 <- BOP
r2033
r2015
[0]
[1]
[2]
[3]
[4]
[5]
[6]
[7]
PKW
PZD
0
1
2
3
4
5
6
7
Note:
Bit 10 must be set in the first PZD word of the telegram received via USS so that the converter will accept the process data as being valid. For this reason, the control word 1 must be transferred to the converter in the first PZD word.
Receive
STX
LGE
ADR
PKW
PZD
7 6 5 4 3 2 1 0
Receive telegram
RxD
BCC
USS configuration
Change par. via 0 ... 15 P0927 (15)
USS baudrate 4 ... 12 P2010 [2] (6)
USS address 0 ... 31 P2011 [2] (0)
USS PZD length 0 ... 8 P2012 [2] (2)
USS PKW length 0 ... 127 P2013 [2] (127)
USS telegram T_off 0 ... 65535 [ms] P2014 [2] (0)
Bit2 = 1
All parameters: Index = 1 => BOP link
1
2
3
4
5
6
7
8
External Interfaces
2500_USSonBOP.vsd
Function diagram
- 2500 -
USS on BOP link, Receiving
16.08.2006 V2.1
MICROMASTER 430

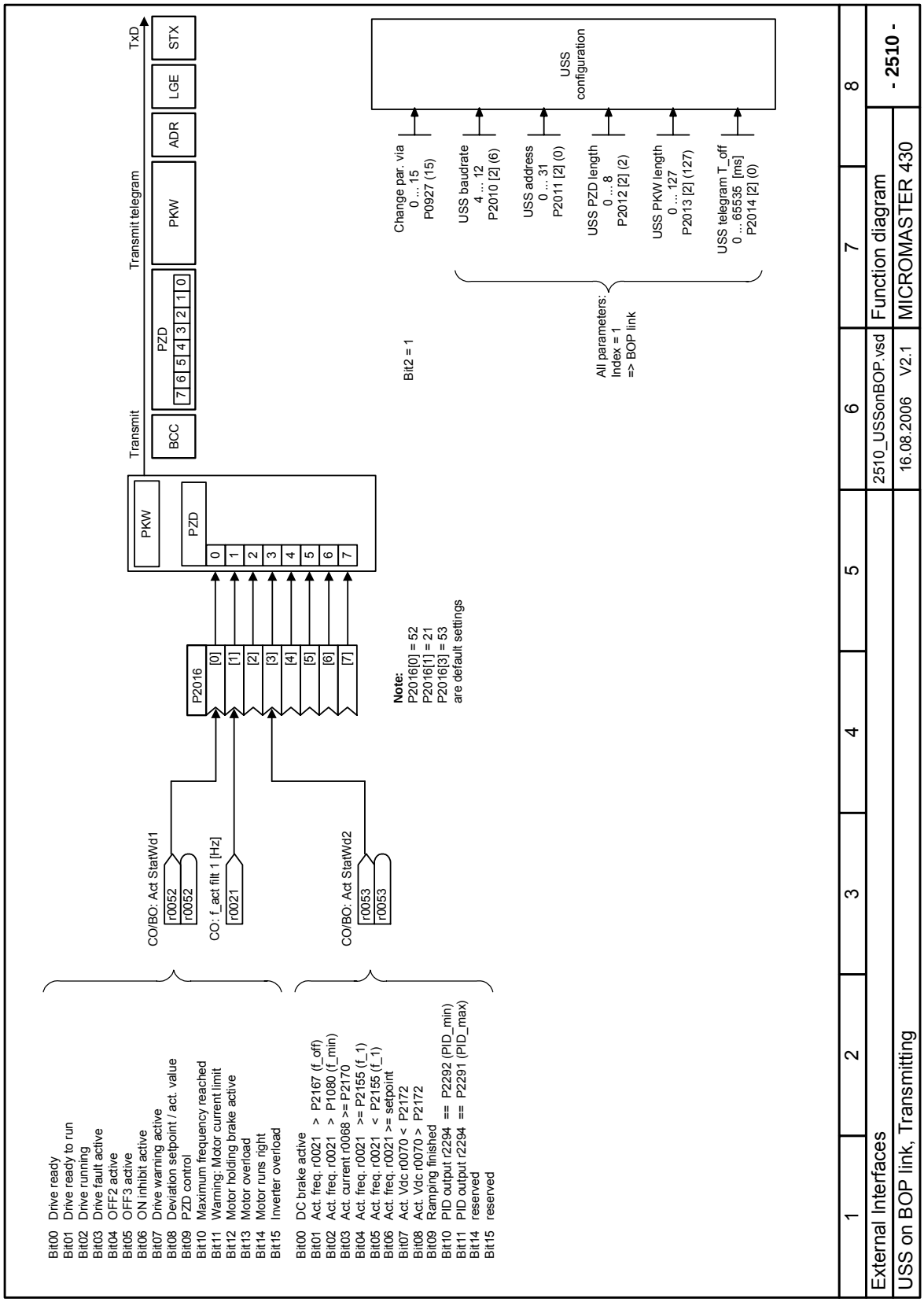
Bit00 Drive ready
Bit01 Drive ready to run
Bit02 Drive running
Bit03 Drive fault active
Bit04 OFF2 active
Bit05 OFF3 active
Bit06 ON inhibit active
Bit07 Drive warning active
Bit08 Deviation setpoint / act. value
Bit09 PZD control
Bit10 Maximum frequency reached
Bit11 Warning: Motor current limit
Bit12 Motor holding brake active
Bit13 Motor overload
Bit14 Motor runs right
Bit15 Inverter overload
Bit00 DC brake active
Bit01 Act. freq. r0021 > P2167 (f_off)
Bit02 Act. freq. r0021 > P1080 (f_min)
Bit03 Act. current r0068 >= P2170
Bit04 Act. freq. r0021 >= P2155 (f_1)
Bit05 Act. freq. r0021 < P2155 (f_1)
Bit06 Act. freq. r0021 >= setpoint
Bit07 Act. Vdc r0070 < P2172
Bit08 Act. Vdc r0070 > P2172
Bit09 Ramping finished
Bit10 PID output r2294 == P2292 (PID_min)
Bit11 PID output r2294 == P2291 (PID_max)
Bit14 reserved
Bit15 reserved
CO/BO: Act StatWd1
r0052
r0052
CO: f_act filt 1 [Hz]
r0021
CO/BO: Act StatWd2
r0053
r0053
P2016
[0]
[1]
[2]
[3]
[4]
[5]
[6]
[7]
Note:
P2016[0] = 52
P2016[1] = 21
P2016[3] = 53
are default settings
PKW
PZD
0
1
2
3
4
5
6
7
Transmit
Transmit telegram
BCC
PZD
7 6 5 4 3 2 1 0
PKW
ADR
LGE
STX
TxD
Bit2 = 1
Change par. via
0 ... 15
P0927 (15)
USS baudrate
4 ... 12
P2010 [2] (6)
USS address
0 ... 31
P2011 [2] (0)
USS PZD length
0 ... 8
P2012 [2] (2)
USS PKW length
0 ... 127
P2013 [2] (127)
USS telegram T_off
0 ... 65535 [ms]
P2014 [2] (0)
All parameters:
Index = 1
=> BOP link
USS
configuration
1
2
3
4
5
6
7
8
External Interfaces
2510_USSonBOP.vsd
Function diagram
- 2510 -
USS on BOP link, Transmitting
16.08.2006 V2.1
MICROMASTER 430

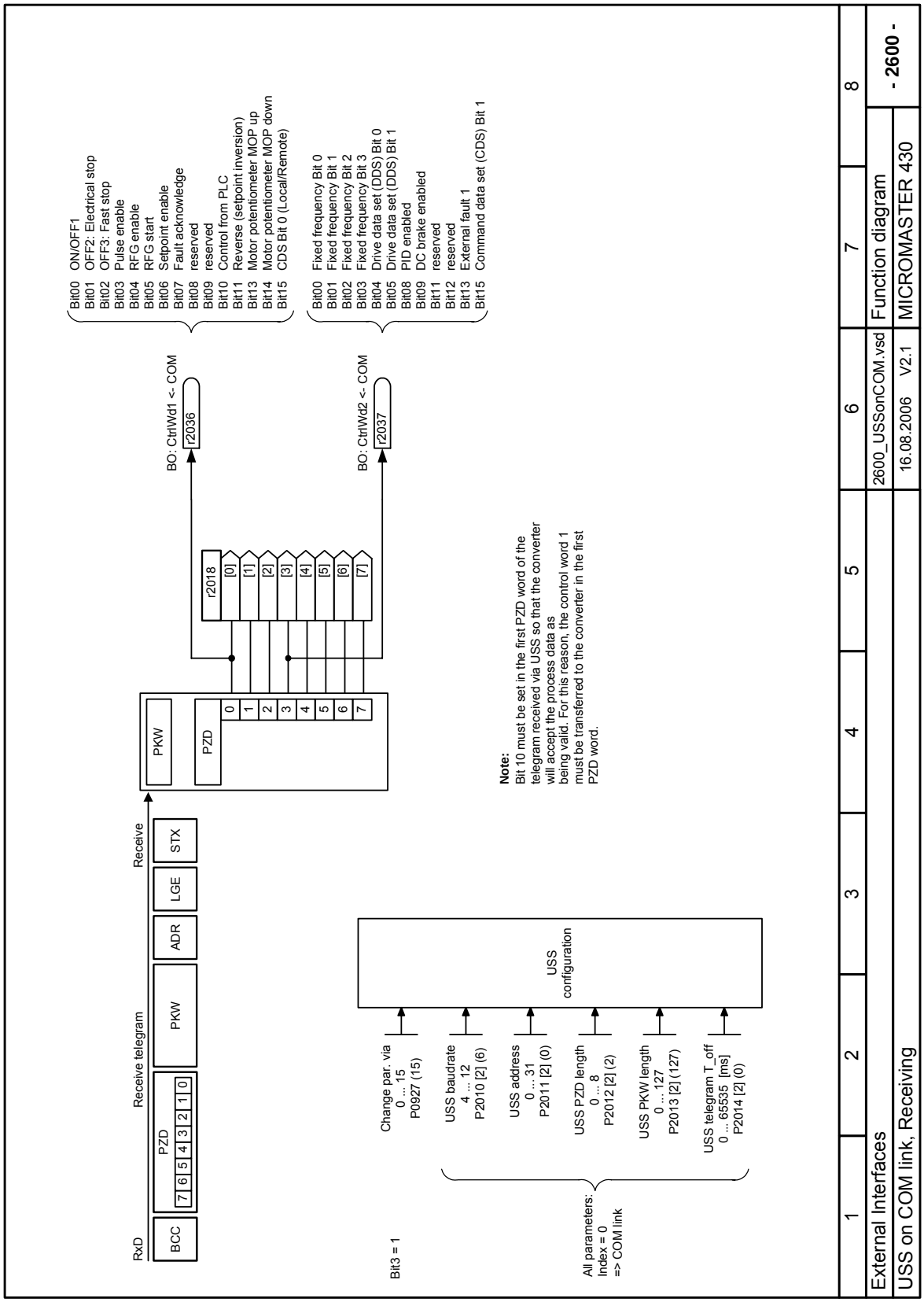
RxD
BCC
PZD
7 6 5 4 3 2 1 0
Receive telegram
PKW
ADR
LGE
STX
Receive
PKW
PZD
0 1 2 3 4 5 6 7
r2018
[0] [1] [2] [3] [4] [5] [6] [7]
BO: CtrlWd1 <- COM
r2036
BO: CtrlWd2 <- COM
r2037
Bit00 ON/OFF1
Bit01 OFF2: Electrical stop
Bit02 OFF3: Fast stop
Bit03 Pulse enable
Bit04 RFG enable
Bit05 RFG start
Bit06 Setpoint enable
Bit07 Fault acknowledge
Bit08 reserved
Bit09 reserved
Bit10 Control from PLC
Bit11 Reverse (setpoint inversion)
Bit13 Motor potentiometer MOP up
Bit14 Motor potentiometer MOP down
Bit15 CDS Bit 0 (Local/Remote)
Bit00 Fixed frequency Bit 0
Bit01 Fixed frequency Bit 1
Bit02 Fixed frequency Bit 2
Bit03 Fixed frequency Bit 3
Bit04 Drive data set (DDS) Bit 0
Bit05 Drive data set (DDS) Bit 1
Bit08 PID enabled
Bit09 DC brake enabled
Bit11 reserved
Bit12 reserved
Bit13 External fault 1
Bit15 Command data set (CDS) Bit 1
Note:
Bit 10 must be set in the first PZD word of the telegram received via USS so that the converter will accept the process data as being valid. For this reason, the control word 1 must be transferred to the converter in the first PZD word.
Bit3 = 1
All parameters:
Index = 0
=> COM link
Change par. via
0 ... 15
P0927 (15)
USS baudrate
4 ... 12
P2010 [2] (6)
USS address
0 ... 31
P2011 [2] (0)
USS PZD length
0 ... 8
P2012 [2] (2)
USS PKW length
0 ... 127
P2013 [2] (127)
USS telegram T_off
0 ... 65535 [ms]
P2014 [2] (0)
USS
configuration
1 2 3 4 5 6 7 8
External Interfaces
2600_USSonCOM.vsd
Function diagram
- 2600 -
USS on COM link, Receiving
16.08.2006 V2.1
MICROMASTER 430

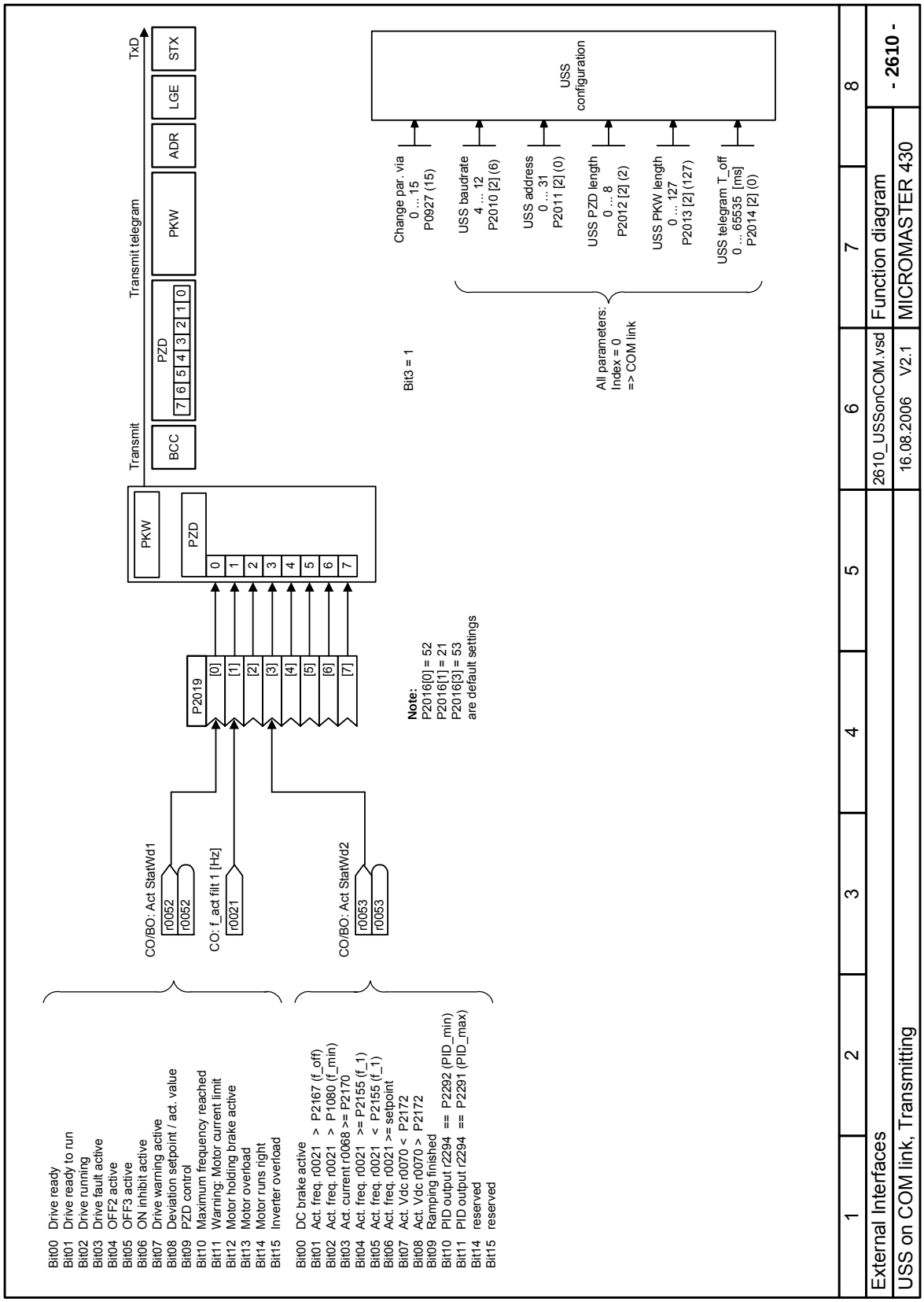
Bit00 Drive ready
Bit01 Drive ready to run
Bit02 Drive running
Bit03 Drive fault active
Bit04 OFF2 active
Bit05 OFF3 active
Bit06 ON inhibit active
Bit07 Drive warning active
Bit08 Deviation setpoint / act. value
Bit09 PZD control
Bit10 Maximum frequency reached
Bit11 Warning: Motor current limit
Bit12 Motor holding brake active
Bit13 Motor overload
Bit14 Motor runs right
Bit15 Inverter overload
Bit00 DC brake active
Bit01 Act. freq. r0021 > P2167 (f_off)
Bit02 Act. freq. r0021 > P1080 (f_min)
Bit03 Act. current r0068 >= P2170
Bit04 Act. freq. r0021 >= P2155 (f_1)
Bit05 Act. freq. r0021 < P2155 (f_1)
Bit06 Act. freq. r0021 >= setpoint
Bit07 Act. Vdc r0070 < P2172
Bit08 Act. Vdc r0070 > P2172
Bit09 Ramping finished
Bit10 PID output r2294 == P2292 (PID_min)
Bit11 PID output r2294 == P2291 (PID_max)
Bit14 reserved
Bit15 reserved
CO/BO: Act StatWd1
r0052
r0052
CO: f_act filt 1 [Hz]
r0021
CO/BO: Act StatWd2
r0053
r0053
P2019
[0]
[1]
[2]
[3]
[4]
[5]
[6]
[7]
Note:
P2016[0] = 52
P2016[1] = 21
P2016[3] = 53
are default settings
PKW
PZD
0
1
2
3
4
5
6
7
Transmit
Transmit telegram
BCC
PZD
7 6 5 4 3 2 1 0
PKW
ADR
LGE
STX
TxD
Bit3 = 1
Change par. via
0 ... 15
P0927 (15)
USS baudrate
4 ... 12
P2010 [2] (6)
USS address
0 ... 31
P2011 [2] (0)
USS PZD length
0 ... 8
P2012 [2] (2)
USS PKW length
0 ... 127
P2013 [2] (127)
USS telegram T_off
0 ... 65535 [ms]
P2014 [2] (0)
All parameters:
Index = 0
=> COM link
USS
configuration
1
2
3
4
5
6
7
8
External Interfaces
2610_USSonCOM.vsd
Function diagram
- 2610 -
USS on COM link, Transmitting
16.08.2006 V2.1
MICROMASTER 430

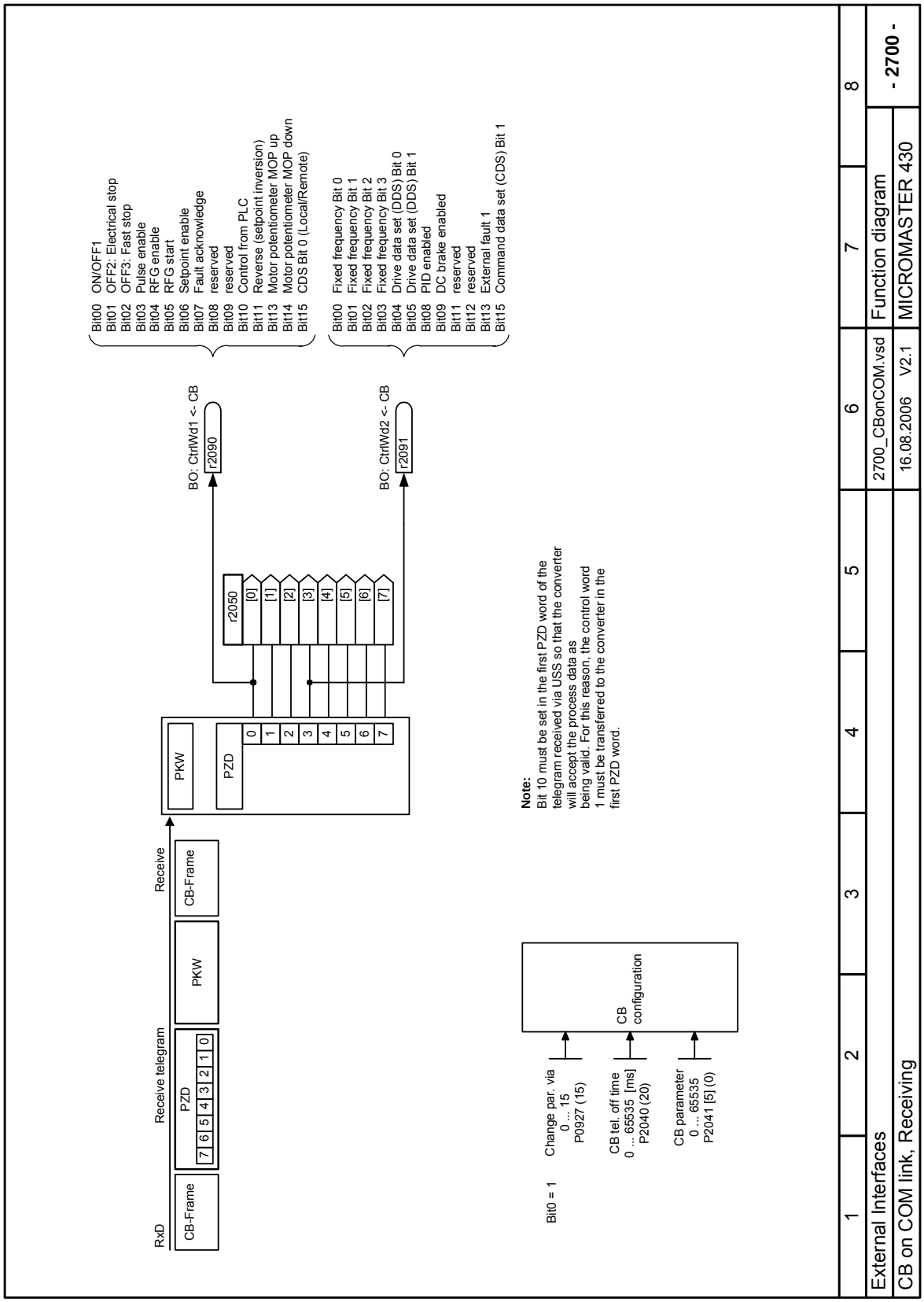
Bit00 ON/OFF1
Bit01 OFF2: Electrical stop
Bit02 OFF3: Fast stop
Bit03 Pulse enable
Bit04 RFG enable
Bit05 RFG start
Bit06 Setpoint enable
Bit07 Fault acknowledge
Bit08 reserved
Bit09 reserved
Bit10 Control from PLC
Bit11 Reverse (setpoint inversion)
Bit13 Motor potentiometer MOP up
Bit14 Motor potentiometer MOP down
Bit15 CDS Bit 0 (Local/Remote)
Bit00 Fixed frequency Bit 0
Bit01 Fixed frequency Bit 1
Bit02 Fixed frequency Bit 2
Bit03 Fixed frequency Bit 3
Bit04 Drive data set (DDS) Bit 0
Bit05 Drive data set (DDS) Bit 1
Bit08 PID enabled
Bit09 DC brake enabled
Bit11 reserved
Bit12 reserved
Bit13 External fault 1
Bit15 Command data set (CDS) Bit 1
BO: CtrlWd1 <- CB
r2090
BO: CtrlWd2 <- CB
r2091
r2050
[0]
[1]
[2]
[3]
[4]
[5]
[6]
[7]
PKW
PZD
0
1
2
3
4
5
6
7
Receive
CB-Frame
PKW
Receive telegram
PZD
7 6 5 4 3 2 1 0
RxD
CB-Frame
Note:
Bit 10 must be set in the first PZD word of the telegram received via USS so that the converter will accept the process data as being valid. For this reason, the control word 1 must be transferred to the converter in the first PZD word.
Bit0 = 1
Change par. via 0 ... 15 P0927 (15)
CB tel. off time 0 ... 65535 [ms] P2040 (20)
CB parameter 0 ... 65535 P2041 [5] (0)
CB configuration
1
2
3
4
5
6
7
8
External Interfaces
2700_CBonCOM.vsd
Function diagram
- 2700 -
CB on COM link, Receiving
16.08.2006 V2.1
MICROMASTER 430

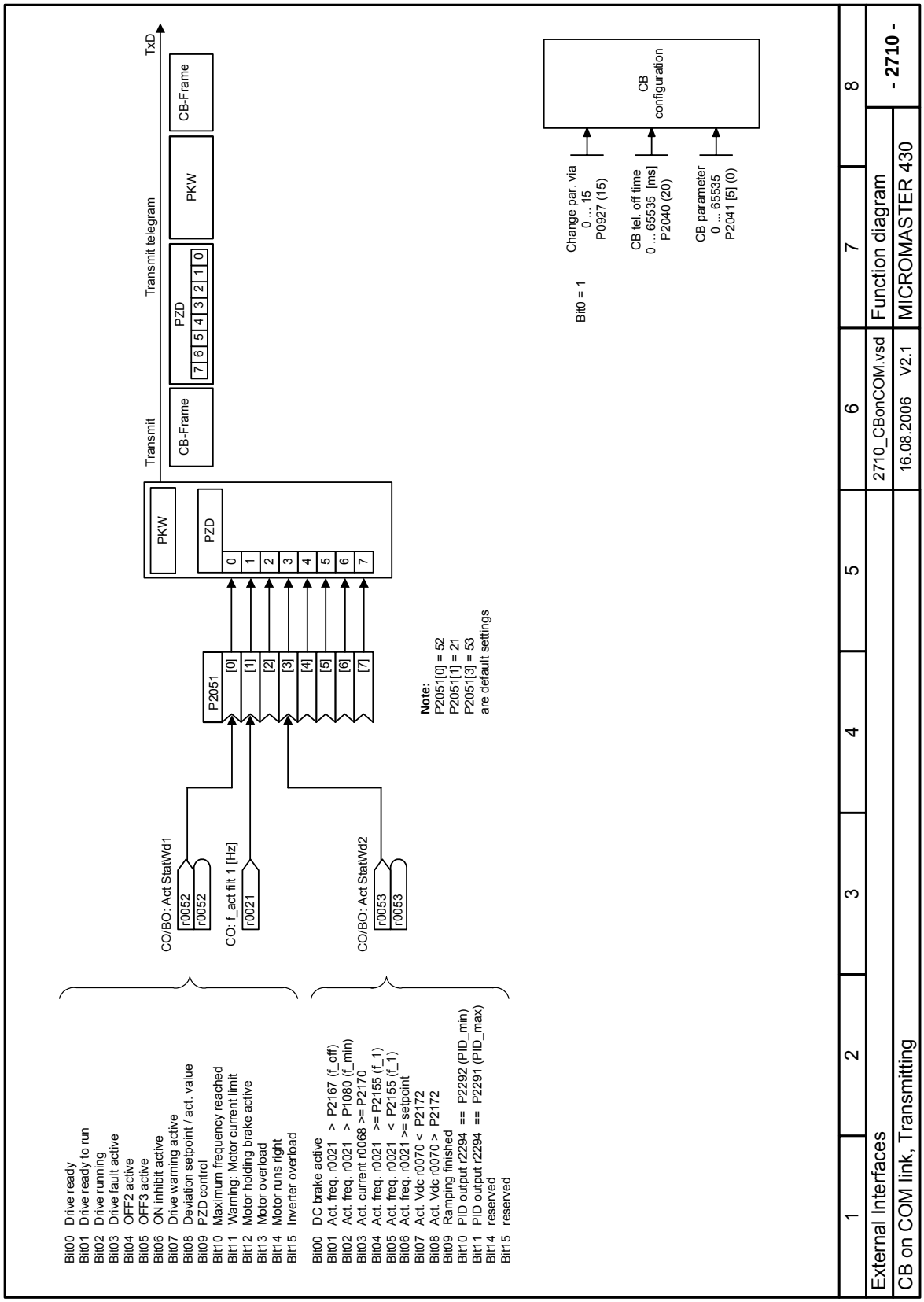
Bit00 Drive ready
Bit01 Drive ready to run
Bit02 Drive running
Bit03 Drive fault active
Bit04 OFF2 active
Bit05 OFF3 active
Bit06 ON inhibit active
Bit07 Drive warning active
Bit08 Deviation setpoint / act. value
Bit09 PZD control
Bit10 Maximum frequency reached
Bit11 Warning: Motor current limit
Bit12 Motor holding brake active
Bit13 Motor overload
Bit14 Motor runs right
Bit15 Inverter overload
Bit00 DC brake active
Bit01 Act. freq. r0021 > P2167 (f_off)
Bit02 Act. freq. r0021 > P1080 (f_min)
Bit03 Act. current r0068 >= P2170
Bit04 Act. freq. r0021 >= P2155 (f_1)
Bit05 Act. freq. r0021 < P2155 (f_1)
Bit06 Act. freq. r0021 >= setpoint
Bit07 Act. Vdc r0070 < P2172
Bit08 Act. Vdc r0070 > P2172
Bit09 Ramping finished
Bit10 PID output r2294 == P2292 (PID_min)
Bit11 PID output r2294 == P2291 (PID_max)
Bit14 reserved
Bit15 reserved
CO/BO: Act StatWd1
r0052
r0052
CO: f_act filt 1 [Hz]
r0021
CO/BO: Act StatWd2
r0053
r0053
P2051
[0]
[1]
[2]
[3]
[4]
[5]
[6]
[7]
Note:
P2051[0] = 52
P2051[1] = 21
P2051[3] = 53
are default settings
PKW
PZD
0
1
2
3
4
5
6
7
Transmit
CB-Frame
PZD
7 6 5 4 3 2 1 0
Transmit telegram
PKW
CB-Frame
TxD
Bit0 = 1
Change par. via
0 ... 15
P0927 (15)
CB tel. off time
0 ... 65535 [ms]
P2040 (20)
CB parameter
0 ... 65535
P2041 [5] (0)
CB
configuration
1
2
3
4
5
6
7
8
External Interfaces
2710_CBonCOM.vsd
Function diagram
- 2710 -
CB on COM link, Transmitting
16.08.2006 V2.1
MICROMASTER 430

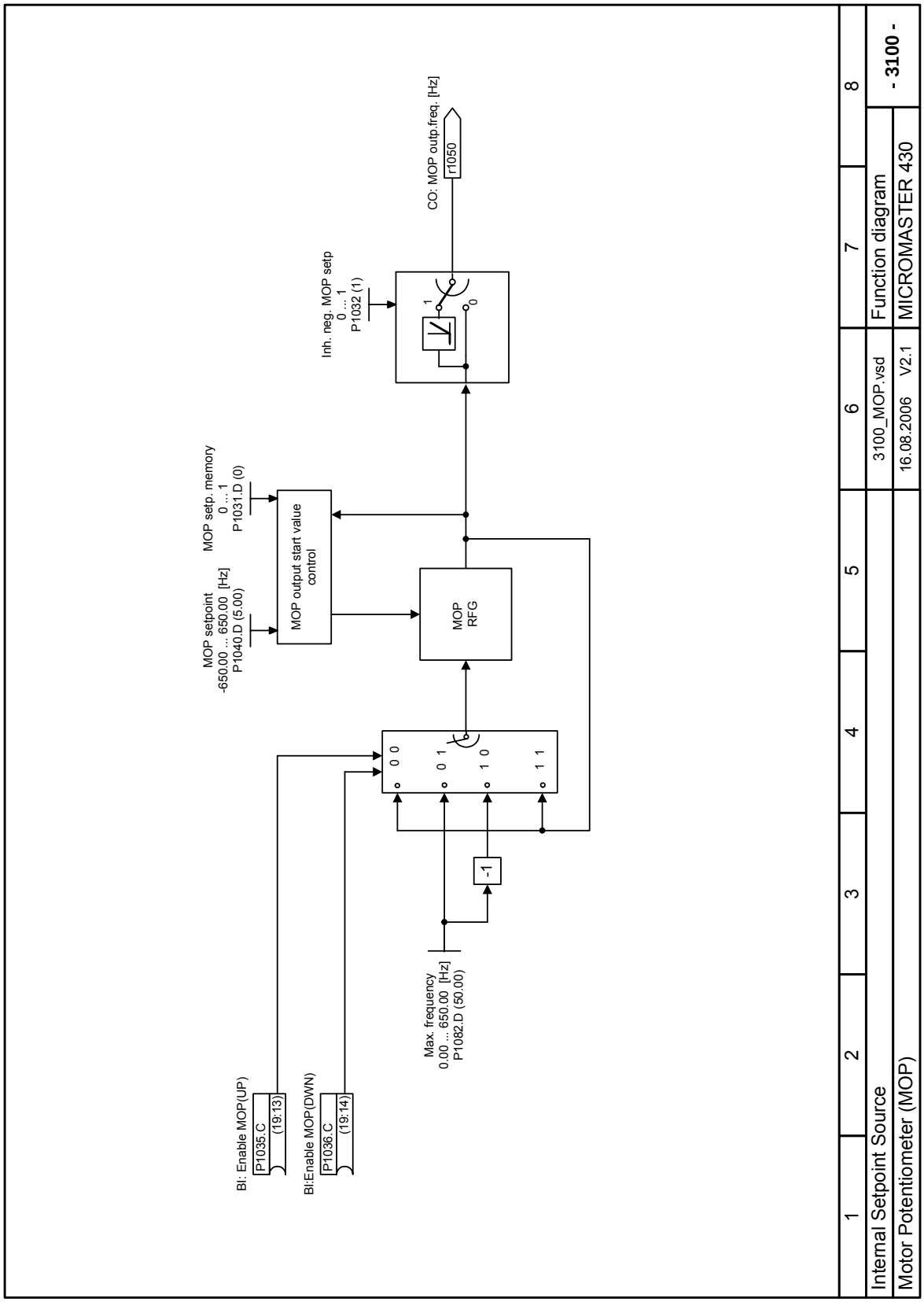
Bi: Enable MOP(UP)
P1035.C
(19:13)
Bi:Enable MOP(DWN)
P1036.C
(19:14)
Max. frequency
0.00 ... 650.00 [Hz]
P1082.D (50.00)
-1
0 0
0 1
1 0
1 1
MOP setpoint
-650.00 ... 650.00 [Hz]
P1040.D (5.00)
MOP setp. memory
0 ... 1
P1031.D (0)
MOP output start value control
MOP
RFG
Inh. neg. MOP setp
0 ... 1
P1032 (1)
1
0
CO: MOP outp.freq. [Hz]
r1050
1
2
3
4
5
6
7
8
Internal Setpoint Source
Motor Potentiometer (MOP)
3100_MOP.vsd
16.08.2006
V2.1
Function diagram
MICROMASTER 430
- 3100 -

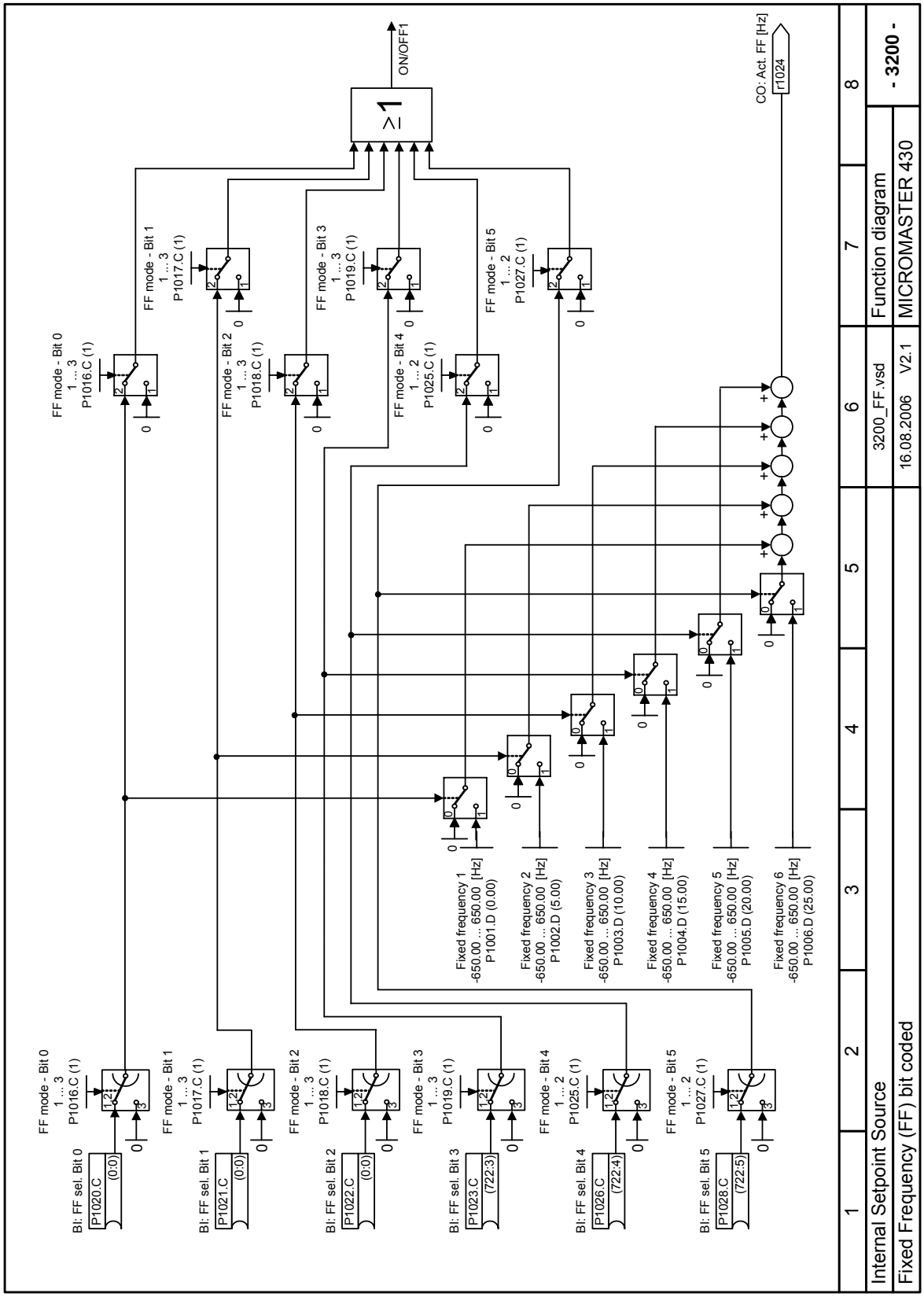
BI: FF sel. Bit 0
P1020.C
(0:0)
BI: FF sel. Bit 1
P1021.C
(0:0)
BI: FF sel. Bit 2
P1022.C
(0:0)
BI: FF sel. Bit 3
P1023.C
(722:3)
BI: FF sel. Bit 4
P1026.C
(722:4)
BI: FF sel. Bit 5
P1028.C
(722:5)
FF mode - Bit 0
1 ... 3
P1016.C (1)
FF mode - Bit 1
1 ... 3
P1017.C (1)
FF mode - Bit 2
1 ... 3
P1018.C (1)
FF mode - Bit 3
1 ... 3
P1019.C (1)
FF mode - Bit 4
1 ... 2
P1025.C (1)
FF mode - Bit 5
1 ... 2
P1027.C (1)
≥1
ON/OFF1
CO: Act. FF [Hz]
r1024
Fixed frequency 1
-650.00 ... 650.00 [Hz]
P1001.D (0.00)
Fixed frequency 2
-650.00 ... 650.00 [Hz]
P1002.D (5.00)
Fixed frequency 3
-650.00 ... 650.00 [Hz]
P1003.D (10.00)
Fixed frequency 4
-650.00 ... 650.00 [Hz]
P1004.D (15.00)
Fixed frequency 5
-650.00 ... 650.00 [Hz]
P1005.D (20.00)
Fixed frequency 6
-650.00 ... 650.00 [Hz]
P1006.D (25.00)
1
2
3
4
5
6
7
8
Internal Setpoint Source
Fixed Frequency (FF) bit coded
3200_FF.vsd
16.08.2006
V2.1
Function diagram
MICROMASTER 430
- 3200 -

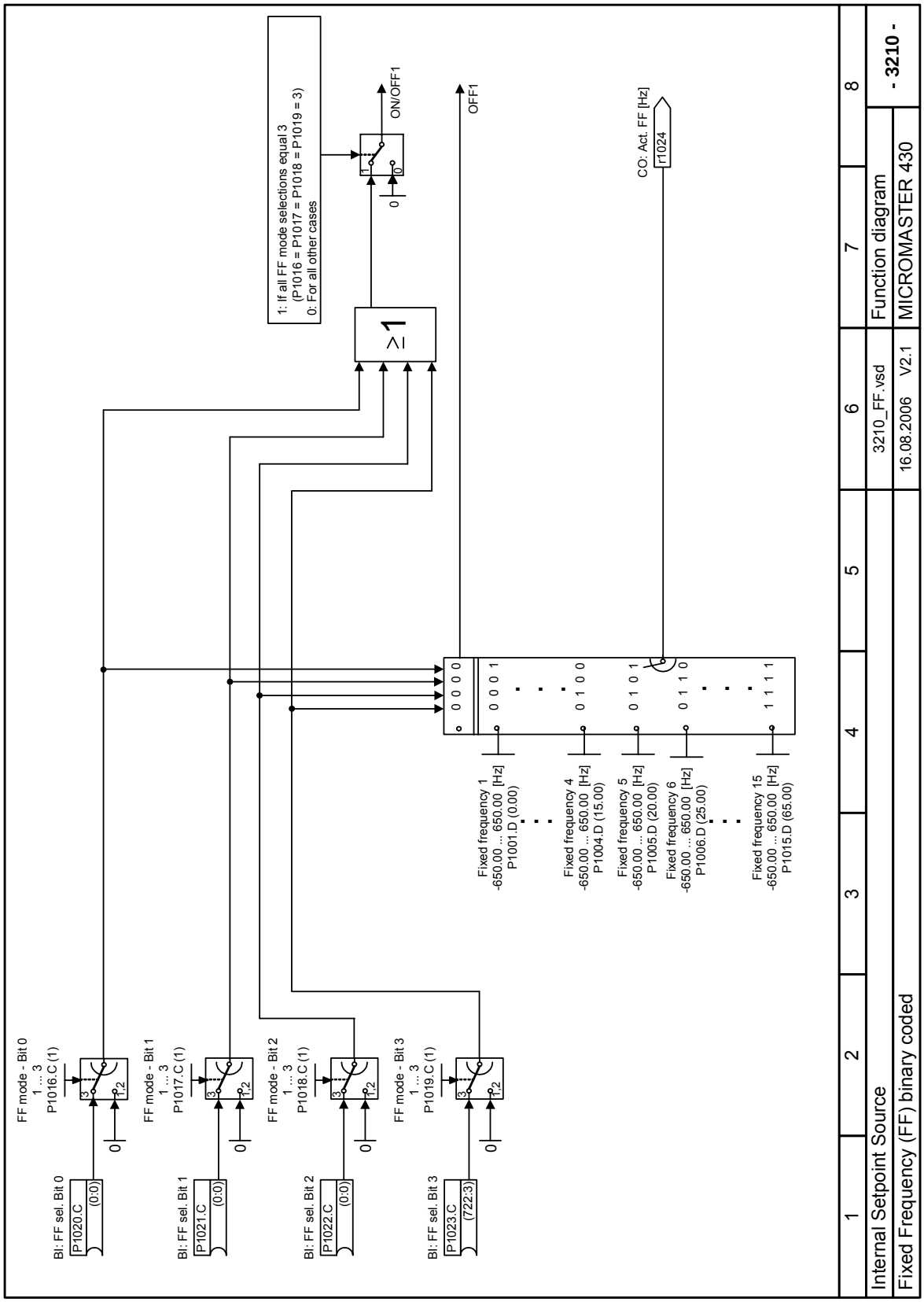
BI: FF sel. Bit 0
P1020.C
(0:0)
FF mode - Bit 0
1 ... 3
P1016.C (1)
BI: FF sel. Bit 1
P1021.C
(0:0)
FF mode - Bit 1
1 ... 3
P1017.C (1)
BI: FF sel. Bit 2
P1022.C
(0:0)
FF mode - Bit 2
1 ... 3
P1018.C (1)
BI: FF sel. Bit 3
P1023.C
(722:3)
FF mode - Bit 3
1 ... 3
P1019.C (1)
1: If all FF mode selections equal 3
(P1016 = P1017 = P1018 = P1019 = 3)
0: For all other cases
≥1
ON/OFF1
OFF1
CO: Act. FF [Hz]
r1024
0 0 0 0
0 0 0 1
0 1 0 0
0 1 0 1
0 1 1 0
1 1 1 1
Fixed frequency 1
-650.00 ... 650.00 [Hz]
P1001.D (0.00)
Fixed frequency 4
-650.00 ... 650.00 [Hz]
P1004.D (15.00)
Fixed frequency 5
-650.00 ... 650.00 [Hz]
P1005.D (20.00)
Fixed frequency 6
-650.00 ... 650.00 [Hz]
P1006.D (25.00)
Fixed frequency 15
-650.00 ... 650.00 [Hz]
P1015.D (65.00)
1 2 3 4 5 6 7 8
Internal Setpoint Source
Fixed Frequency (FF) binary coded
3210_FF.vsd
16.08.2006 V2.1
Function diagram
MICROMASTER 430
- 3210 -

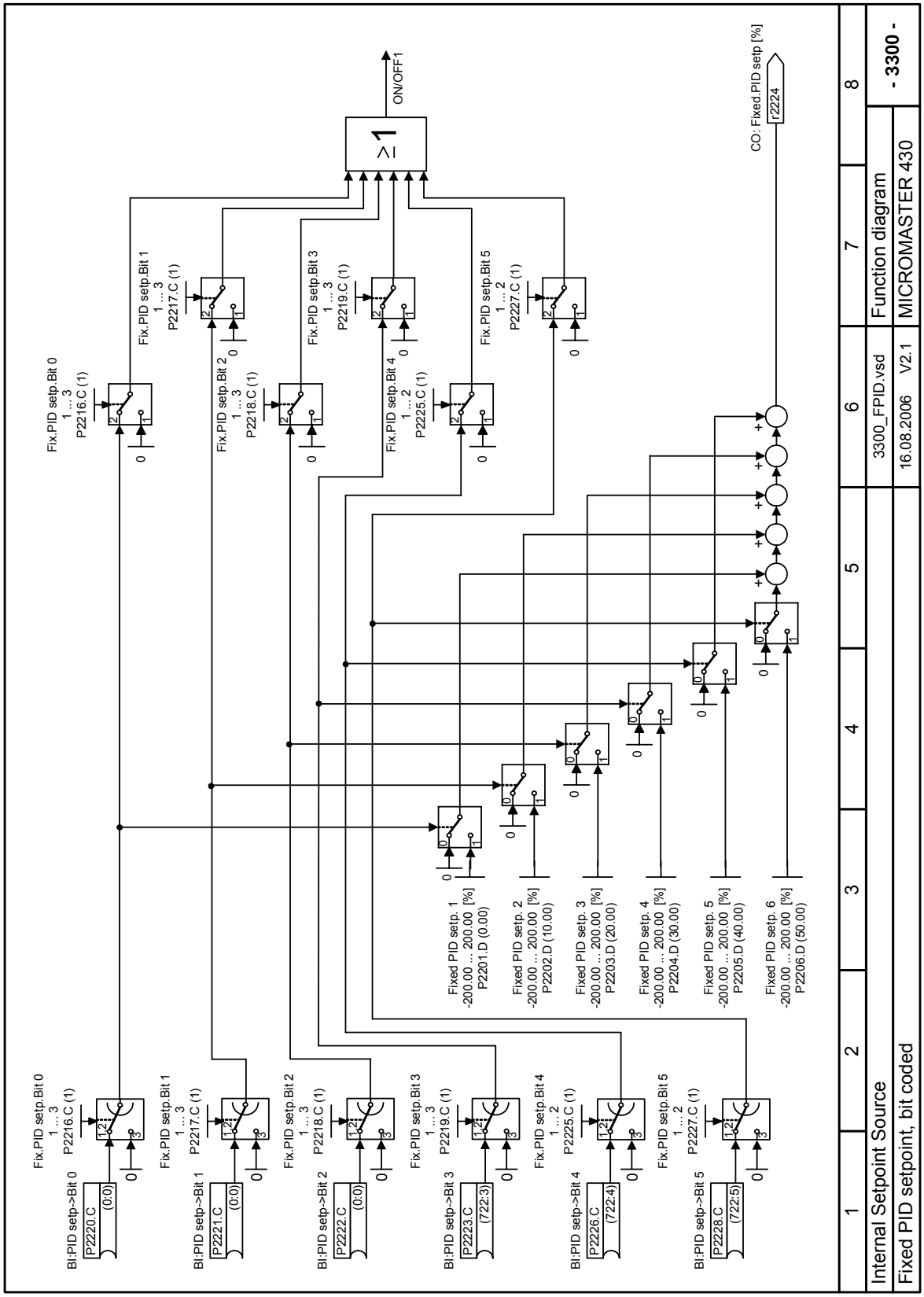
Fix.PID setp.Bit 0
1 ... 3
P2216.C (1)
Fix.PID setp.Bit 1
1 ... 3
P2217.C (1)
Fix.PID setp.Bit 2
1 ... 3
P2218.C (1)
Fix.PID setp.Bit 3
1 ... 3
P2219.C (1)
Fix.PID setp.Bit 4
1 ... 2
P2225.C (1)
Fix.PID setp.Bit 5
1 ... 2
P2227.C (1)
≥1
ON/OFF1
CO: Fixed.PID setp [%]
r2224
BI:PID setp->Bit 0
P2220.C
(0:0)
BI:PID setp->Bit 1
P2221.C
(0:0)
BI:PID setp->Bit 2
P2222.C
(0:0)
BI:PID setp->Bit 3
P2223.C
(722:3)
BI:PID setp->Bit 4
P2226.C
(722:4)
BI:PID setp->Bit 5
P2228.C
(722:5)
Fixed PID setp. 1
-200.00 ... 200.00 [%]
P2201.D (0.00)
Fixed PID setp. 2
-200.00 ... 200.00 [%]
P2202.D (10.00)
Fixed PID setp. 3
-200.00 ... 200.00 [%]
P2203.D (20.00)
Fixed PID setp. 4
-200.00 ... 200.00 [%]
P2204.D (30.00)
Fixed PID setp. 5
-200.00 ... 200.00 [%]
P2205.D (40.00)
Fixed PID setp. 6
-200.00 ... 200.00 [%]
P2206.D (50.00)
1 2 3 4 5 6 7 8
Internal Setpoint Source
Fixed PID setpoint, bit coded
3300_FPID.vsd
16.08.2006 V2.1
Function diagram
MICROMASTER 430
- 3300 -

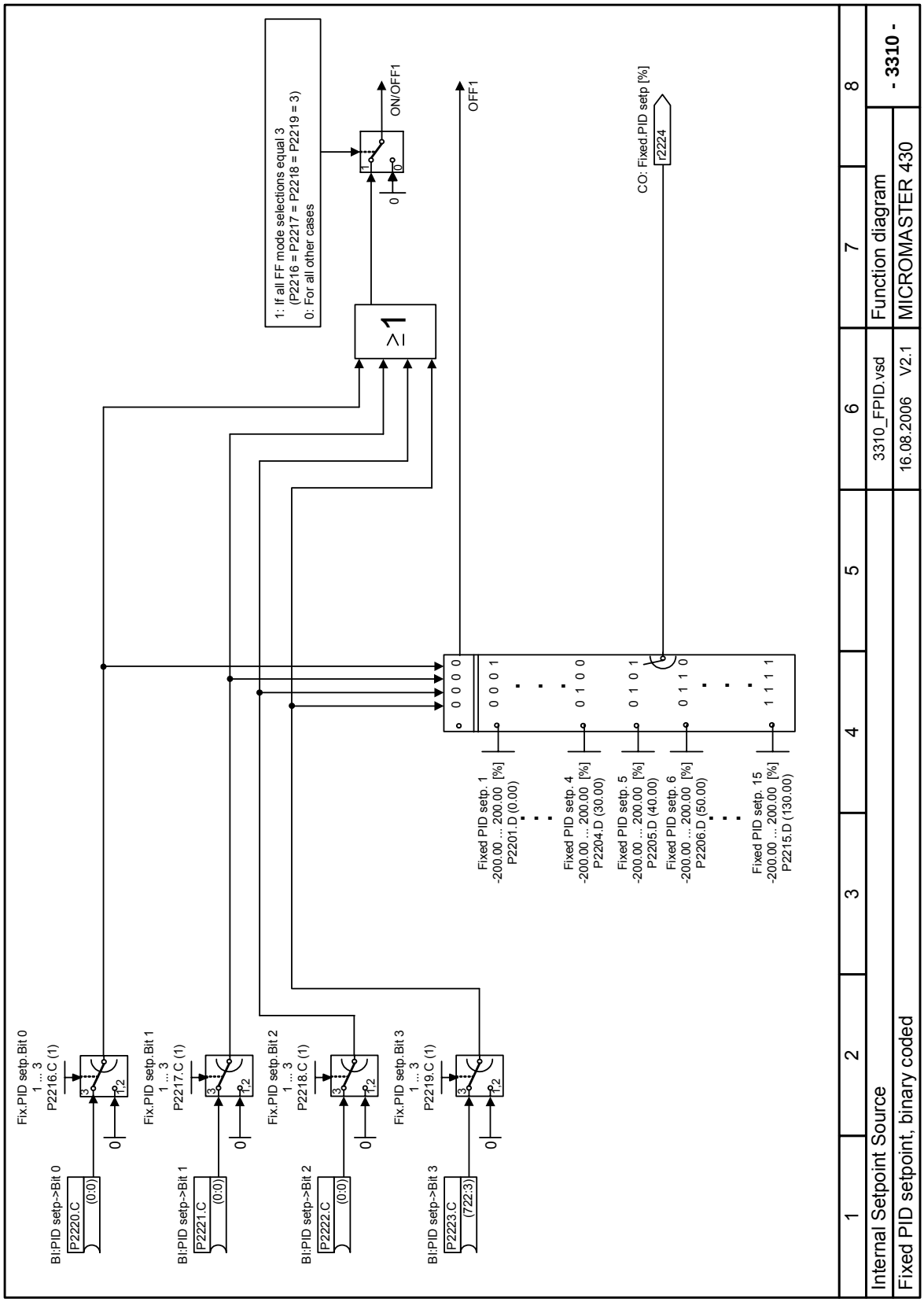
Fix.PID setp.Bit 0
1 ... 3
P2216.C (1)
Fix.PID setp.Bit 1
1 ... 3
P2217.C (1)
Fix.PID setp.Bit 2
1 ... 3
P2218.C (1)
Fix.PID setp.Bit 3
1 ... 3
P2219.C (1)
BI:PID setp->Bit 0
P2220.C
(0:0)
BI:PID setp->Bit 1
P2221.C
(0:0)
BI:PID setp->Bit 2
P2222.C
(0:0)
BI:PID setp->Bit 3
P2223.C
(722:3)
1: If all FF mode selections equal 3
(P2216 = P2217 = P2218 = P2219 = 3)
0: For all other cases
≥1
ON/OFF1
OFF1
CO: Fixed.PID setp [%]
r2224
0 0 0 0
0 0 0 1
0 1 0 0
0 1 0 1
0 1 1 0
1 1 1 1
Fixed PID setp. 1
-200.00 ... 200.00 [%]
P2201.D (0.00)
Fixed PID setp. 4
-200.00 ... 200.00 [%]
P2204.D (30.00)
Fixed PID setp. 5
-200.00 ... 200.00 [%]
P2205.D (40.00)
Fixed PID setp. 6
-200.00 ... 200.00 [%]
P2206.D (50.00)
Fixed PID setp. 15
-200.00 ... 200.00 [%]
P2215.D (130.00)
1 2 3 4 5 6 7 8
Internal Setpoint Source
Fixed PID setpoint, binary coded
3310_FPID.vsd
16.08.2006 V2.1
Function diagram
MICROMASTER 430
- 3310 -

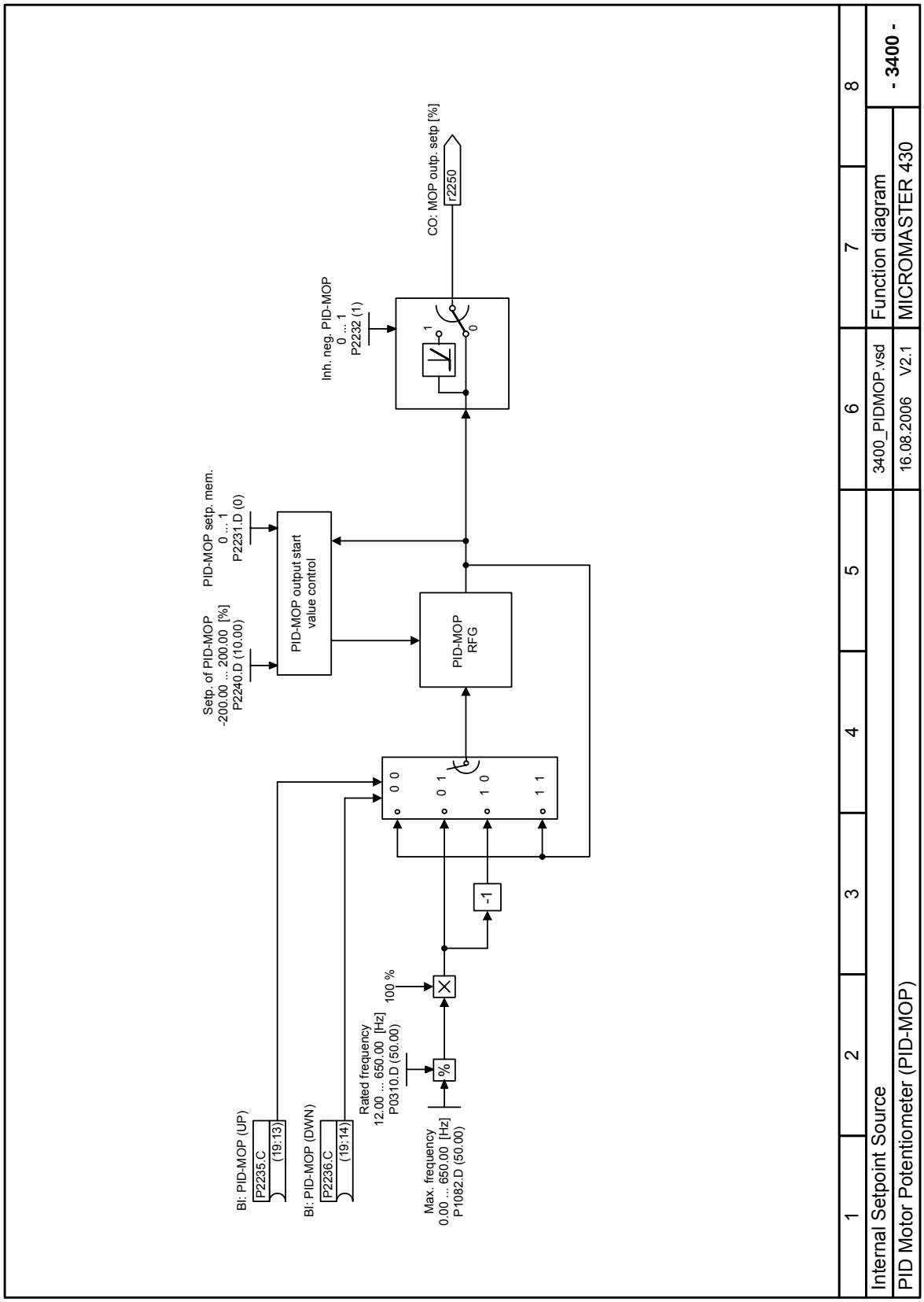
BI: PID-MOP (UP)
P2235.C
(19:13)
BI: PID-MOP (DWN)
P2236.C
(19:14)
Rated frequency
12.00 ... 650.00 [Hz]
P0310.D (50.00)
Max. frequency
0.00 ... 650.00 [Hz]
P1082.D (50.00)
100 %
%
-1
0 0
0 1
1 0
1 1
Setp. of PID-MOP
-200.00 ... 200.00 [%]
P2240.D (10.00)
PID-MOP setp. mem.
0 ... 1
P2231.D (0)
PID-MOP output start value control
PID-MOP RFG
Inh. neg. PID-MOP
0 ... 1
P2232 (1)
1
0
CO: MOP outp. setp [%]
r2250
1
2
3
4
5
6
7
8
Internal Setpoint Source
PID Motor Potentiometer (PID-MOP)
3400_PIDMOP.vsd
16.08.2006
V2.1
Function diagram
MICROMASTER 430
- 3400 -

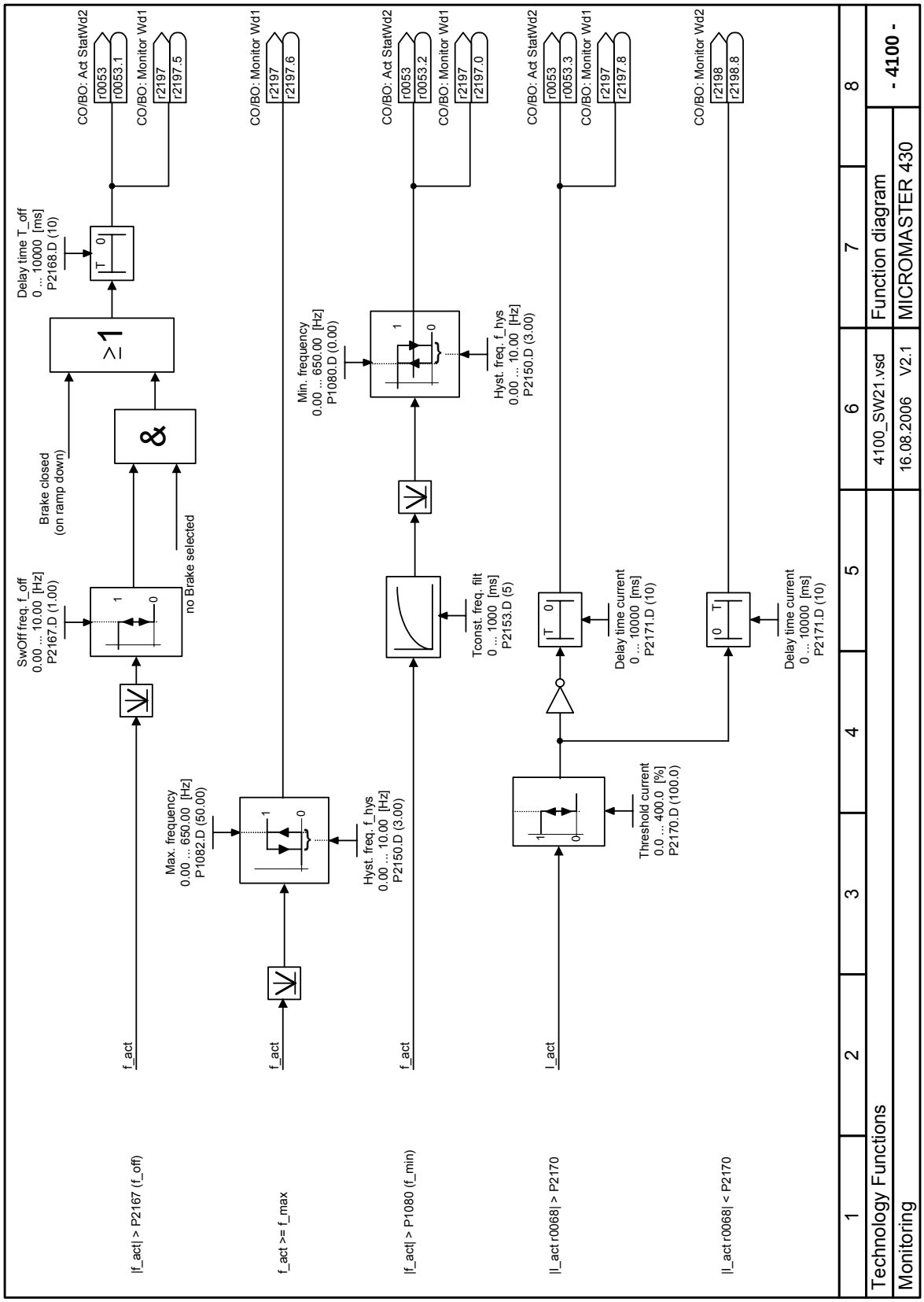
|f_act| > P2167 (f_off)
f_act >= f_max
|f_act| > P1080 (f_min)
|I_act r0068| > P2170
|I_act r0068| < P2170
f_act
f_act
f_act
I_act
SwOff freq. f_off
0.00 ... 10.00 [Hz]
P2167.D (1.00)
Brake closed
(on ramp down)
no Brake selected
&
≥1
Delay time T_off
0 ... 10000 [ms]
P2168.D (10)
CO/BO: Act StatWd2
r0053
r0053.1
CO/BO: Monitor Wd1
r2197
r2197.5
Max. frequency
0.00 ... 650.00 [Hz]
P1082.D (50.00)
Hyst. freq. f_hys
0.00 ... 10.00 [Hz]
P2150.D (3.00)
CO/BO: Monitor Wd1
r2197
r2197.6
Min. frequency
0.00 ... 650.00 [Hz]
P1080.D (0.00)
Hyst. freq. f_hys
0.00 ... 10.00 [Hz]
P2150.D (3.00)
CO/BO: Act StatWd2
r0053
r0053.2
CO/BO: Monitor Wd1
r2197
r2197.0
Tconst. freq. filt
0 ... 1000 [ms]
P2153.D (5)
Threshold current
0.0 ... 400.0 [%]
P2170.D (100.0)
Delay time current
0 ... 10000 [ms]
P2171.D (10)
CO/BO: Act StatWd2
r0053
r0053.3
CO/BO: Monitor Wd1
r2197
r2197.8
Delay time current
0 ... 10000 [ms]
P2171.D (10)
CO/BO: Monitor Wd2
r2198
r2198.8
1
2
3
4
5
6
7
8
Technology Functions
Monitoring
4100_SW21.vsd
16.08.2006 V2.1
Function diagram
MICROMASTER 430
- 4100 -

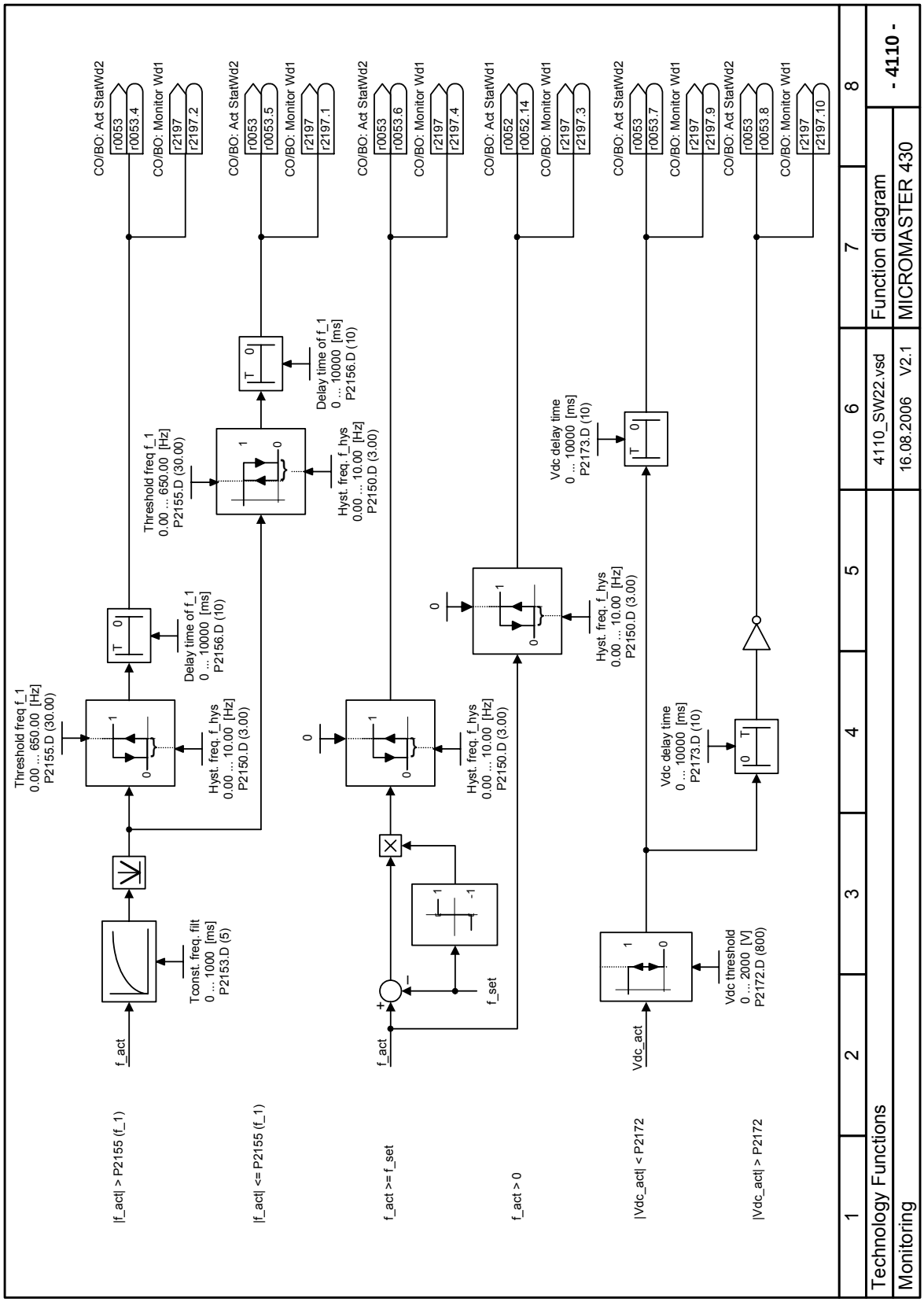
|f_act| > P2155 (f_1)
|f_act| <= P2155 (f_1)
f_act >= f_set
f_act > 0
|Vdc_act| < P2172
|Vdc_act| > P2172
f_act
Tconst. freq. filt
0 ... 1000 [ms]
P2153.D (5)
Threshold freq f_1
0.00 ... 650.00 [Hz]
P2155.D (30.00)
Hyst. freq. f_hys
0.00 ... 10.00 [Hz]
P2150.D (3.00)
Delay time of f_1
0 ... 10000 [ms]
P2156.D (10)
f_set
Vdc_act
Vdc threshold
0 ... 2000 [V]
P2172.D (800)
Vdc delay time
0 ... 10000 [ms]
P2173.D (10)
CO/BO: Act StatWd2
r0053
r0053.4
r0053.5
r0053.6
r0053.7
r0053.8
CO/BO: Monitor Wd1
r2197
r2197.1
r2197.2
r2197.3
r2197.4
r2197.9
r2197.10
CO/BO: Act StatWd1
r0052
r0052.14
1
2
3
4
5
6
7
8
Technology Functions
Monitoring
4110_SW22.vsd
16.08.2006 V2.1
Function diagram
MICROMASTER 430
- 4110 -

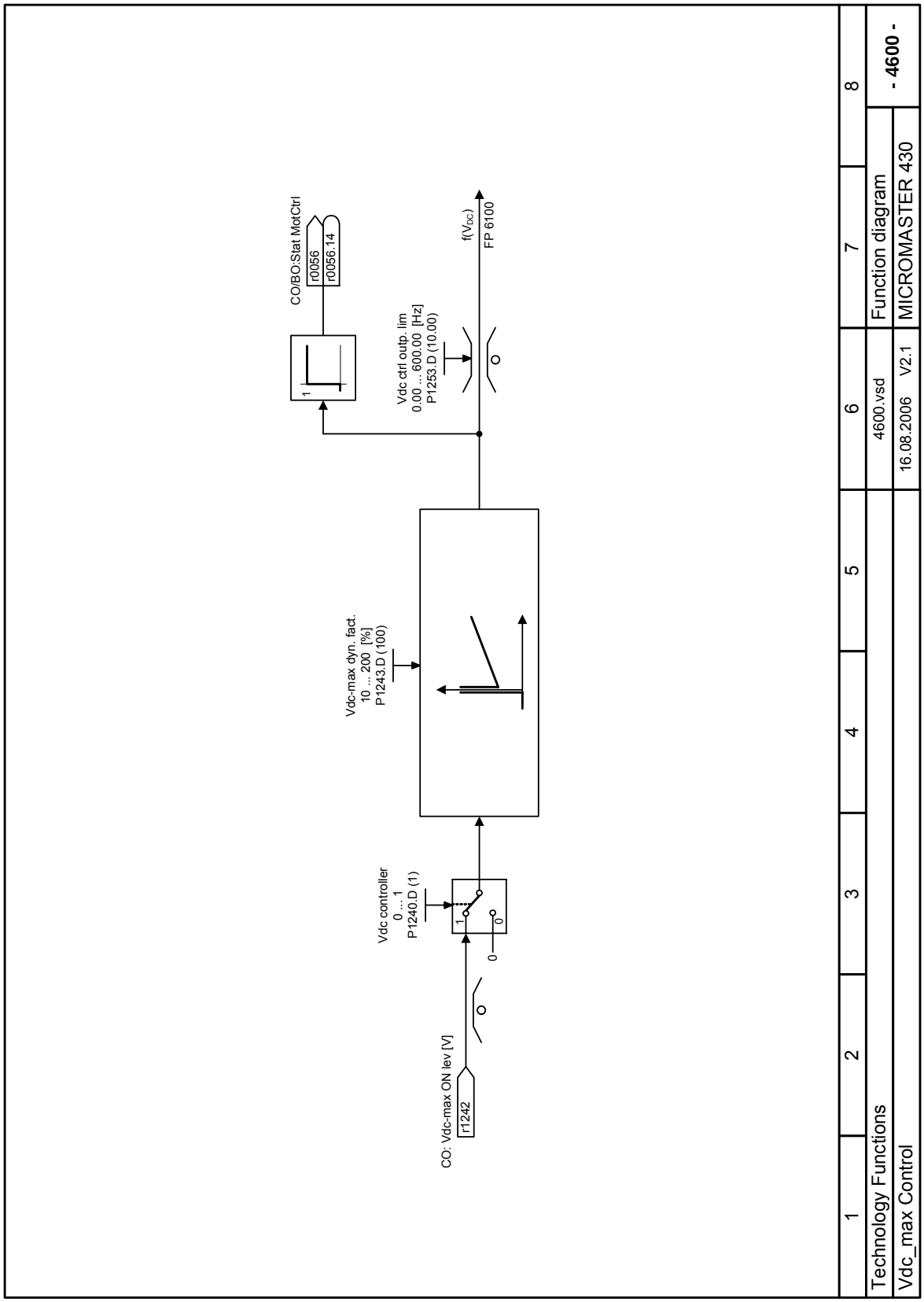
CO/BO:Stat MotCtrl
r0056
r0056.14
1
Vdc ctrl outp. lim
0.00 ... 600.00 [Hz]
P1253.D (10.00)
f(VDC)
FP 6100
Vdc-max dyn. fact.
10 ... 200 [%]
P1243.D (100)
Vdc controller
0 ... 1
P1240.D (1)
1
0
0
CO: Vdc-max ON lev [V]
r1242
1
2
3
4
5
6
7
8
Technology Functions
Vdc_max Control
4600.vsd
16.08.2006 V2.1
Function diagram
MICROMASTER 430
- 4600 -

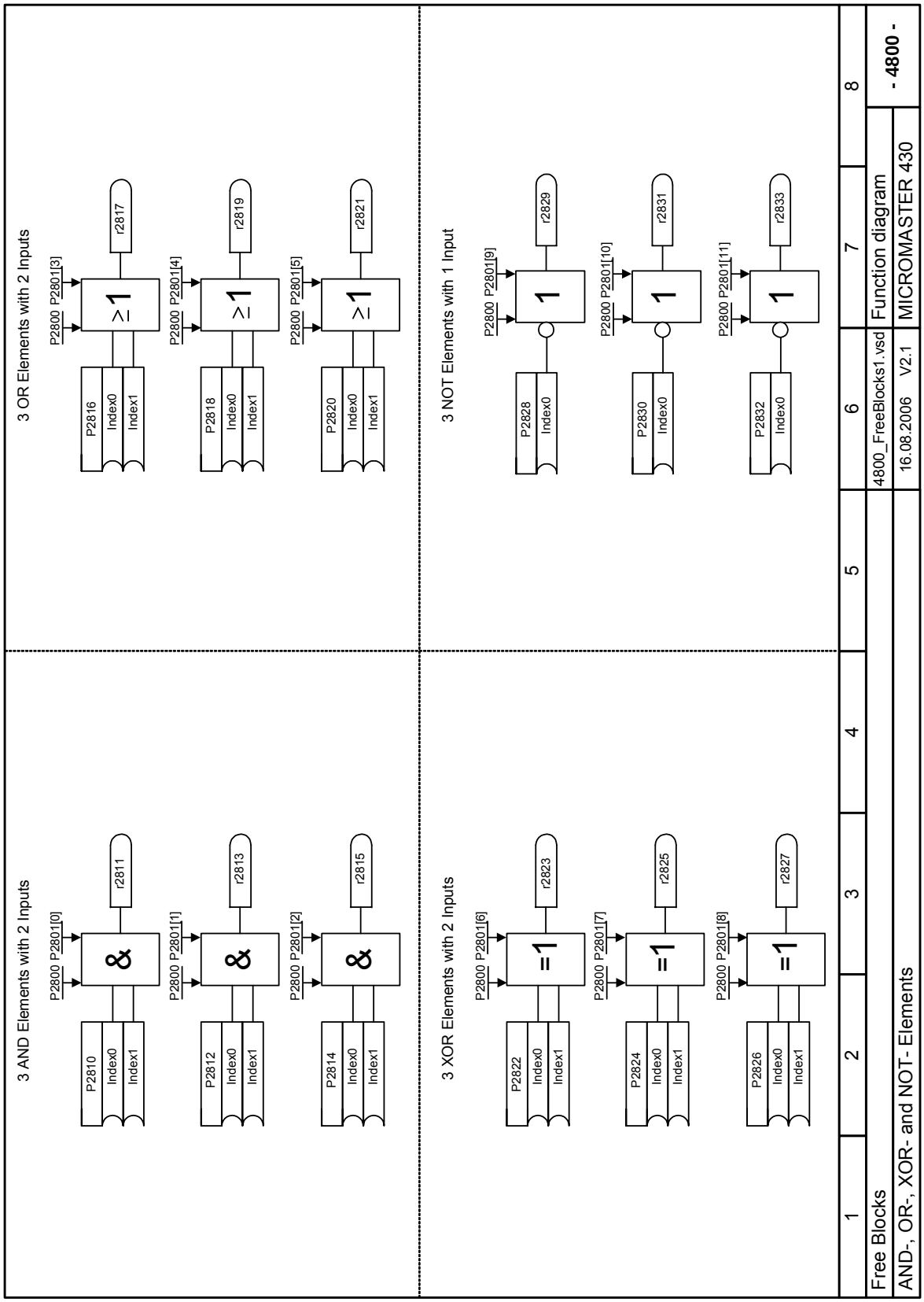
3 AND Elements with 2 Inputs
P2800 P2801[0]
P2810
Index0
Index1
&
r2811
P2800 P2801[1]
P2812
Index0
Index1
&
r2813
P2800 P2801[2]
P2814
Index0
Index1
&
r2815
3 XOR Elements with 2 Inputs
P2800 P2801[6]
P2822
Index0
Index1
=1
r2823
P2800 P2801[7]
P2824
Index0
Index1
=1
r2825
P2800 P2801[8]
P2826
Index0
Index1
=1
r2827
3 OR Elements with 2 Inputs
P2800 P2801[3]
P2816
Index0
Index1
≥1
r2817
P2800 P2801[4]
P2818
Index0
Index1
≥1
r2819
P2800 P2801[5]
P2820
Index0
Index1
≥1
r2821
3 NOT Elements with 1 Input
P2800 P2801[9]
P2828
Index0
1
r2829
P2800 P2801[10]
P2830
Index0
1
r2831
P2800 P2801[11]
P2832
Index0
1
r2833
1
2
3
4
5
6
7
8
Free Blocks
4800_FreeBlocks1.vsd
Function diagram
- 4800 -
AND-, OR-, XOR- and NOT- Elements
16.08.2006 V2.1
MICROMASTER 430

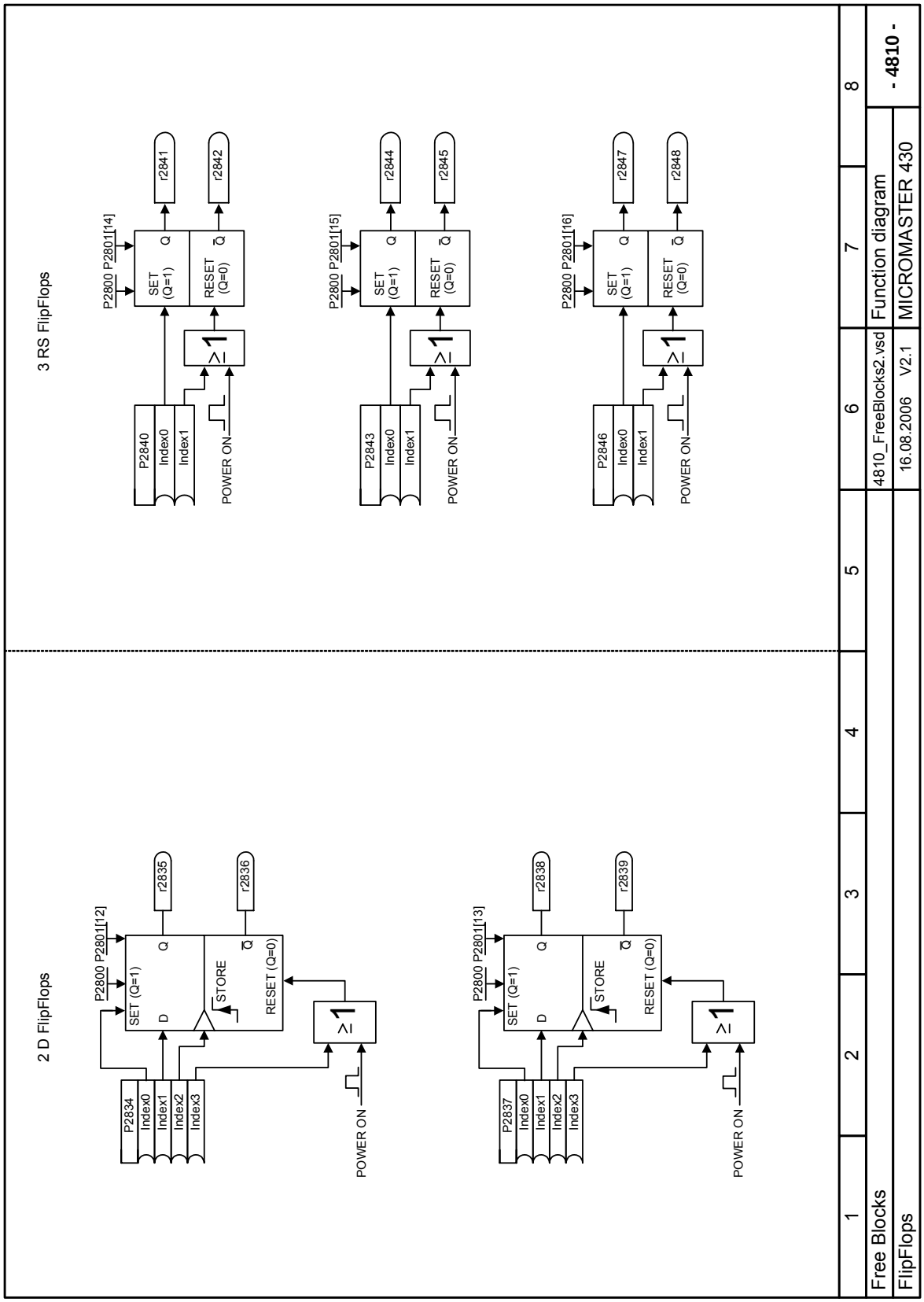
3 RS FlipFlops
P2800 P2801[14]
SET (Q=1)
RESET (Q=0)
Q
Q̄
r2841
r2842
P2840
Index0
Index1
POWER ON
≥1
P2800 P2801[15]
r2844
r2845
P2843
P2800 P2801[16]
r2847
r2848
P2846
2 D FlipFlops
P2800 P2801[12]
D
STORE
r2835
r2836
P2834
Index2
Index3
P2800 P2801[13]
r2838
r2839
P2837
1
2
3
4
5
6
7
8
Free Blocks
FlipFlops
4810_FreeBlocks2.vsd
16.08.2006 V2.1
Function diagram
MICROMASTER 430
- 4810 -

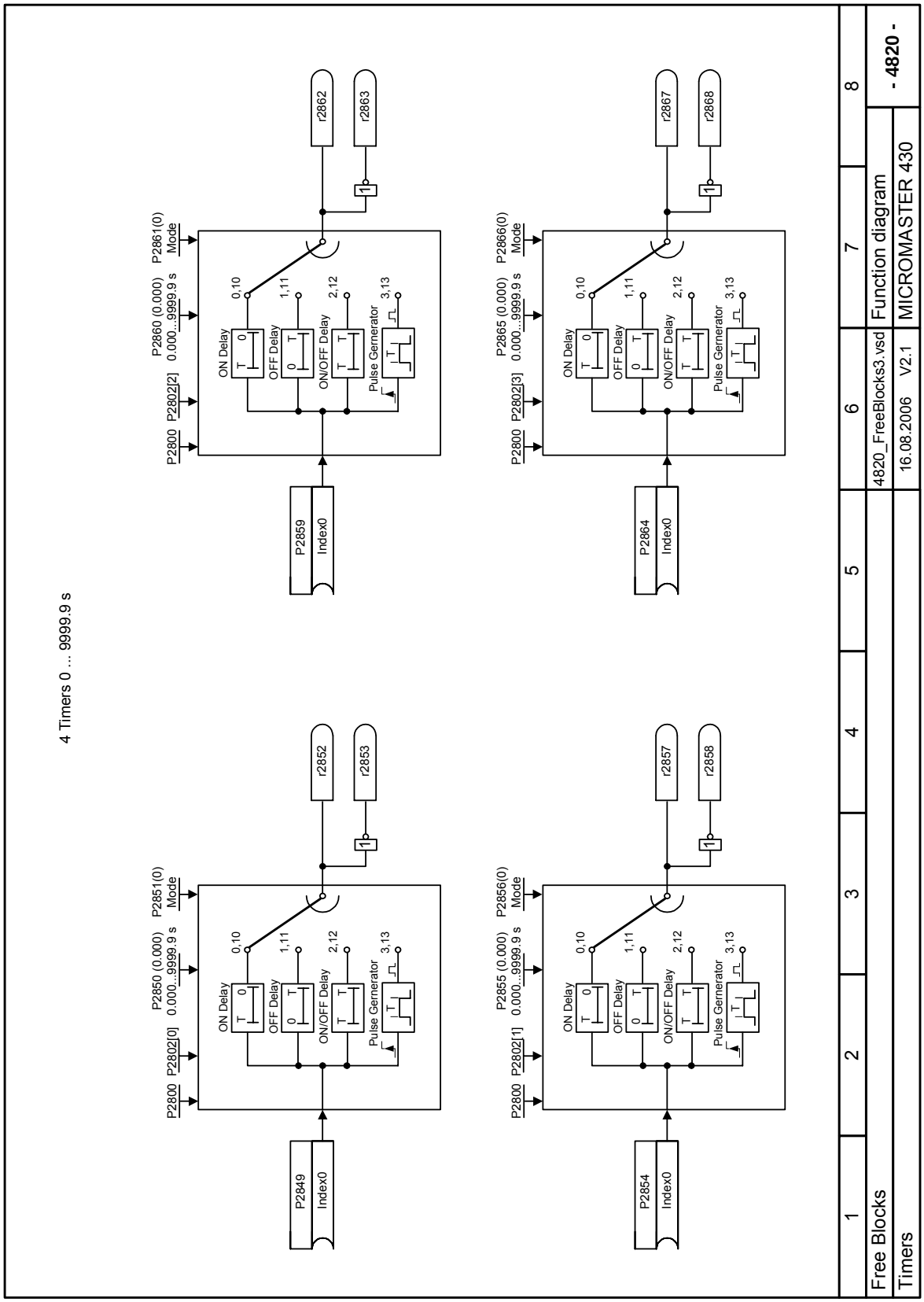
4 Timers 0 ... 9999.9 s
P2800
P2802[0]
P2850 (0.000)
0.000...9999.9 s
P2851(0)
Mode
P2849
Index0
ON Delay
OFF Delay
ON/OFF Delay
Pulse Gernerator
0,10
1,11
2,12
3,13
r2852
r2853
P2800
P2802[1]
P2855 (0.000)
0.000...9999.9 s
P2856(0)
Mode
P2854
Index0
r2857
r2858
P2800
P2802[2]
P2860 (0.000)
0.000...9999.9 s
P2861(0)
Mode
P2859
Index0
r2862
r2863
P2800
P2802[3]
P2865 (0.000)
0.000...9999.9 s
P2866(0)
Mode
P2864
Index0
r2867
r2868
1
2
3
4
5
6
7
8
Free Blocks
4820_FreeBlocks3.vsd
Function diagram
- 4820 -
Timers
16.08.2006
V2.1
MICROMASTER 430

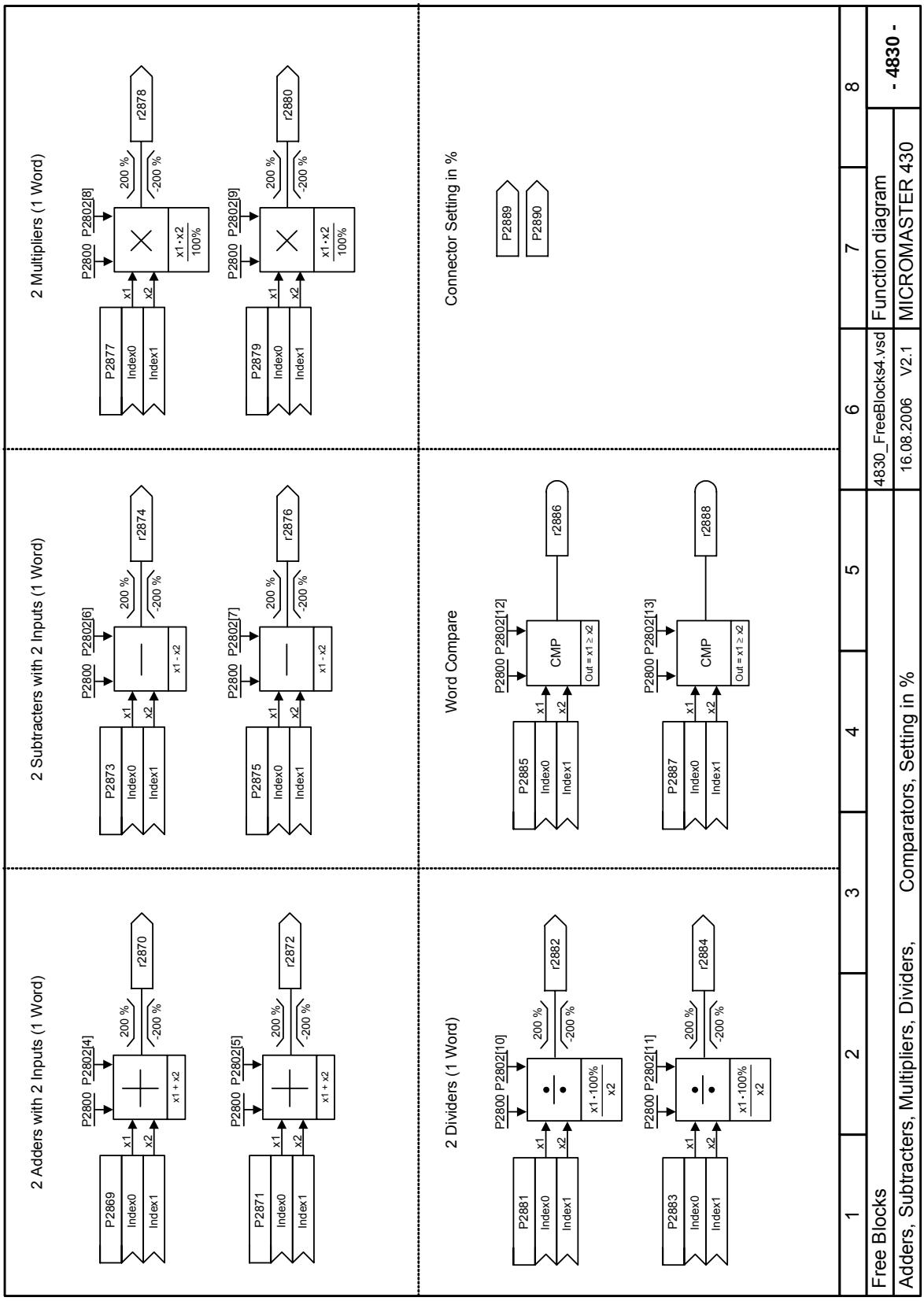
2 Multipliers (1 Word)
P2877
Index0
Index1
x1
x2
P2800
P2802[8]
200 %
-200 %
x1 · x2 / 100%
r2878
P2879
Index0
Index1
x1
x2
P2800
P2802[9]
200 %
-200 %
x1 · x2 / 100%
r2880
Connector Setting in %
P2889
P2890
2 Subtracters with 2 Inputs (1 Word)
P2873
Index0
Index1
x1
x2
P2800
P2802[6]
200 %
-200 %
x1 - x2
r2874
P2875
Index0
Index1
x1
x2
P2800
P2802[7]
200 %
-200 %
x1 - x2
r2876
Word Compare
P2885
Index0
Index1
x1
x2
P2800
P2802[12]
CMP
Out = x1 ≥ x2
r2886
P2887
Index0
Index1
x1
x2
P2800
P2802[13]
CMP
Out = x1 ≥ x2
r2888
2 Adders with 2 Inputs (1 Word)
P2869
Index0
Index1
x1
x2
P2800
P2802[4]
200 %
-200 %
x1 + x2
r2870
P2871
Index0
Index1
x1
x2
P2800
P2802[5]
200 %
-200 %
x1 + x2
r2872
2 Dividers (1 Word)
P2881
Index0
Index1
x1
x2
P2800
P2802[10]
200 %
-200 %
x1 · 100% / x2
r2882
P2883
Index0
Index1
x1
x2
P2800
P2802[11]
200 %
-200 %
x1 · 100% / x2
r2884
1
2
3
4
5
6
7
8
Free Blocks
4830_FreeBlocks4.vsd
Function diagram
- 4830 -
Adders, Subtracters, Multipliers, Dividers, Comparators, Setting in %
16.08.2006 V2.1
MICROMASTER 430

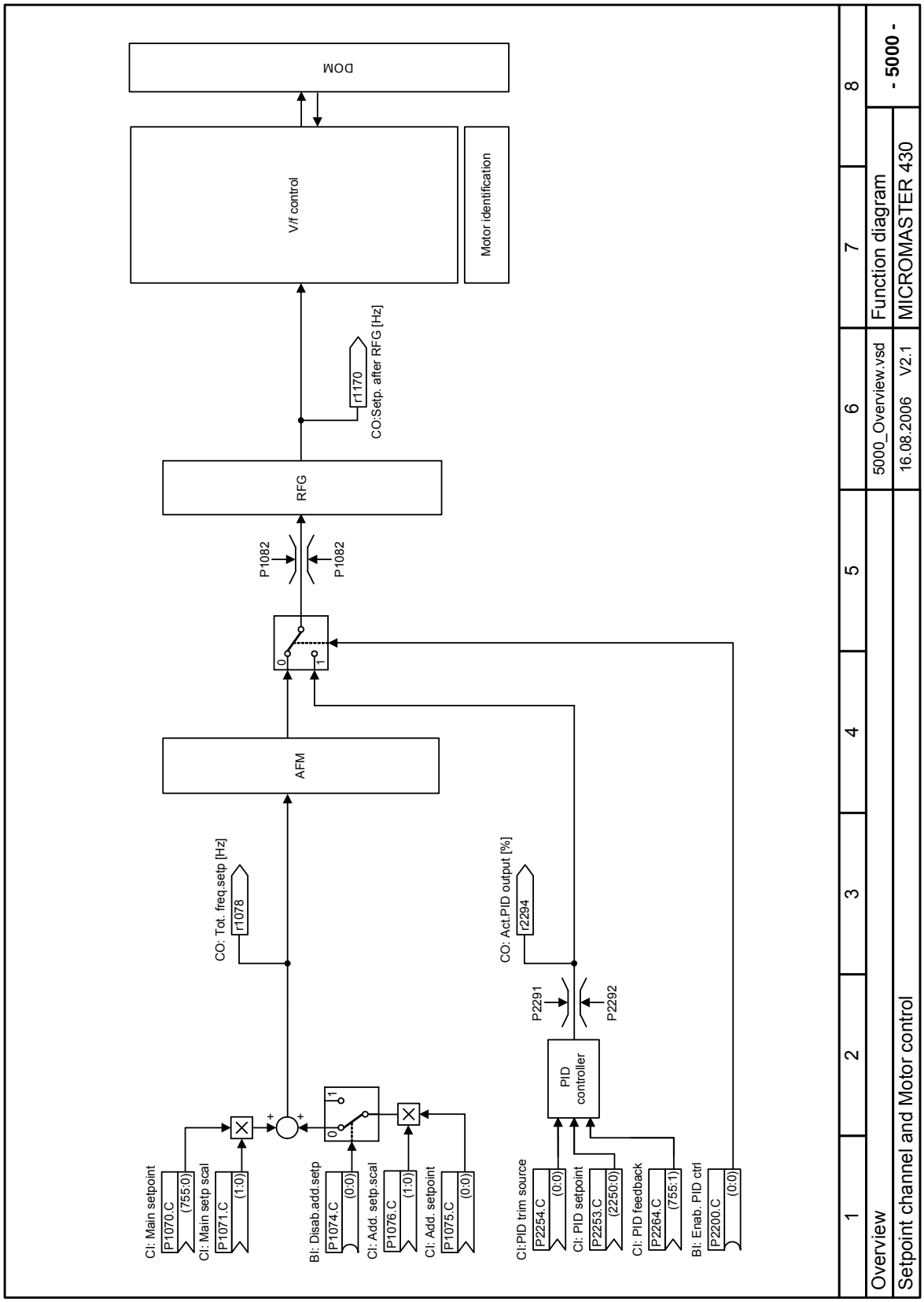
CI: Main setpoint
P1070.C
(755:0)
CI: Main setp scal
P1071.C
(1:0)
BI: Disab.add.setp
P1074.C
(0:0)
CI: Add. setp.scal
P1076.C
(1:0)
CI: Add. setpoint
P1075.C
(0:0)
CI:PID trim source
P2254.C
(0:0)
CI: PID setpoint
P2253.C
(2250:0)
CI: PID feedback
P2264.C
(755:1)
BI: Enab. PID ctrl
P2200.C
(0:0)
CO: Tot. freq.setp [Hz]
r1078
CO: Act.PID output [%]
r2294
P2291
P2292
PID controller
AFM
P1082
P1082
RFG
r1170
CO:Setp. after RFG [Hz]
V/f control
Motor identification
DOM
1
2
3
4
5
6
7
8
Overview
5000_Overview.vsd
Function diagram
- 5000 -
Setpoint channel and Motor control
16.08.2006 V2.1
MICROMASTER 430

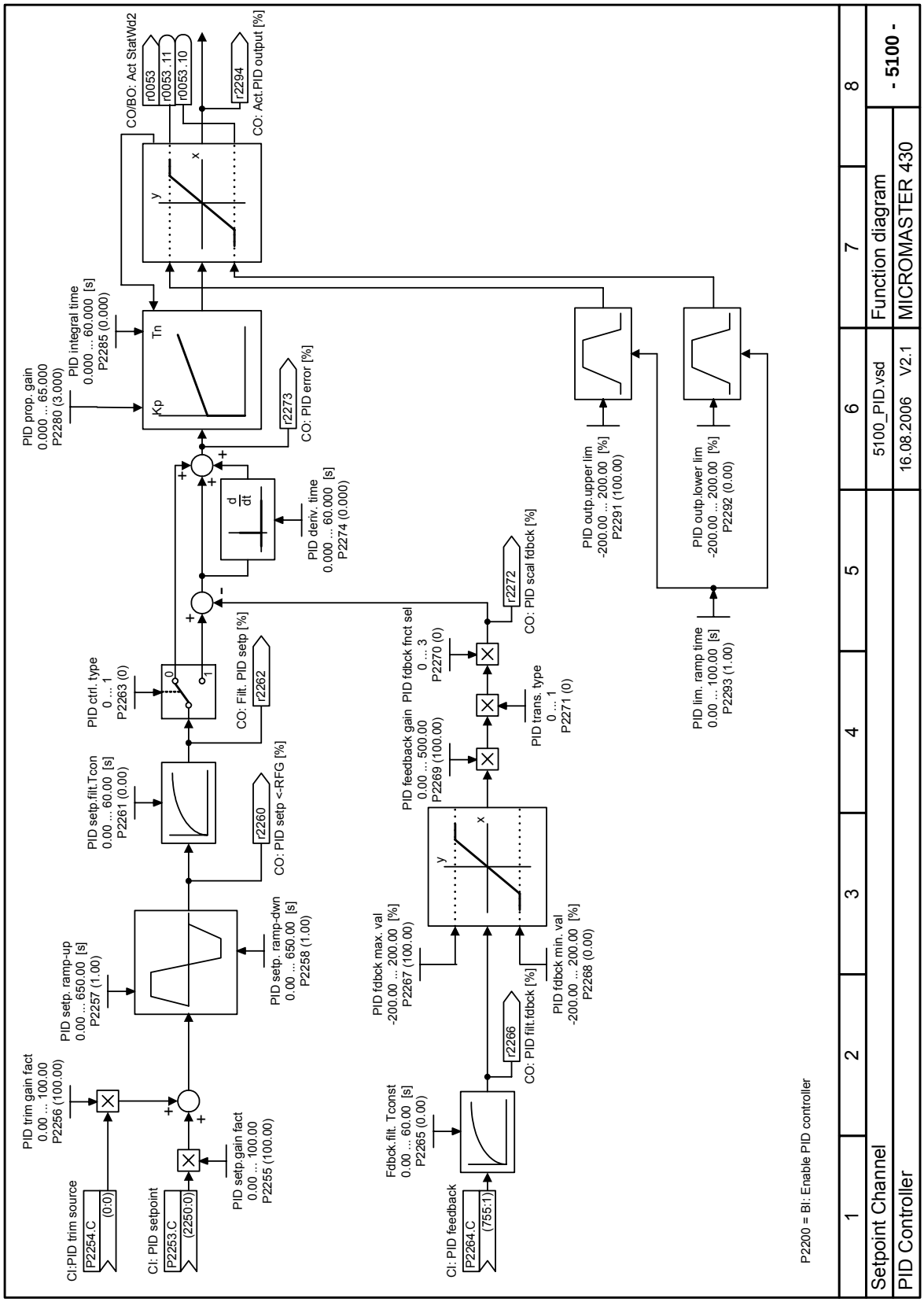
CI:PID trim source
P2254.C
(0:0)
CI: PID setpoint
P2253.C
(2250:0)
PID trim gain fact
0.00 ... 100.00
P2256 (100.00)
PID setp.gain fact
0.00 ... 100.00
P2255 (100.00)
PID setp. ramp-up
0.00 ... 650.00 [s]
P2257 (1.00)
PID setp. ramp-dwn
0.00 ... 650.00 [s]
P2258 (1.00)
PID setp.filt.Tcon
0.00 ... 60.00 [s]
P2261 (0.00)
r2260
CO: PID setp <-RFG [%]
PID ctrl. type
0 ... 1
P2263 (0)
CO: Filt. PID setp [%]
r2262
PID prop. gain
0.000 ... 65.000
P2280 (3.000)
PID integral time
0.000 ... 60.000 [s]
P2285 (0.000)
Kp
Tn
r2273
CO: PID error [%]
PID deriv. time
0.000 ... 60.000 [s]
P2274 (0.000)
CO/BO: Act StatWd2
r0053
r0053.11
r0053.10
r2294
CO: Act.PID output [%]
Fdbck.filt. Tconst
0.00 ... 60.00 [s]
P2265 (0.00)
CI: PID feedback
P2264.C
(755:1)
r2266
CO: PID filt.fdbck [%]
PID fdbck max. val
-200.00 ... 200.00 [%]
P2267 (100.00)
PID fdbck min. val
-200.00 ... 200.00 [%]
P2268 (0.00)
PID feedback gain
0.00 ... 500.00
P2269 (100.00)
PID fdbck fnct sel
0 ... 3
P2270 (0)
PID trans. type
0 ... 1
P2271 (0)
r2272
CO: PID scal fdbck [%]
PID outp.upper lim
-200.00 ... 200.00 [%]
P2291 (100.00)
PID outp.lower lim
-200.00 ... 200.00 [%]
P2292 (0.00)
PID lim. ramp time
0.00 ... 100.00 [s]
P2293 (1.00)
P2200 = BI: Enable PID controller
1
2
3
4
5
6
7
8
Setpoint Channel
PID Controller
5100_PID.vsd
16.08.2006
V2.1
Function diagram
MICROMASTER 430
- 5100 -

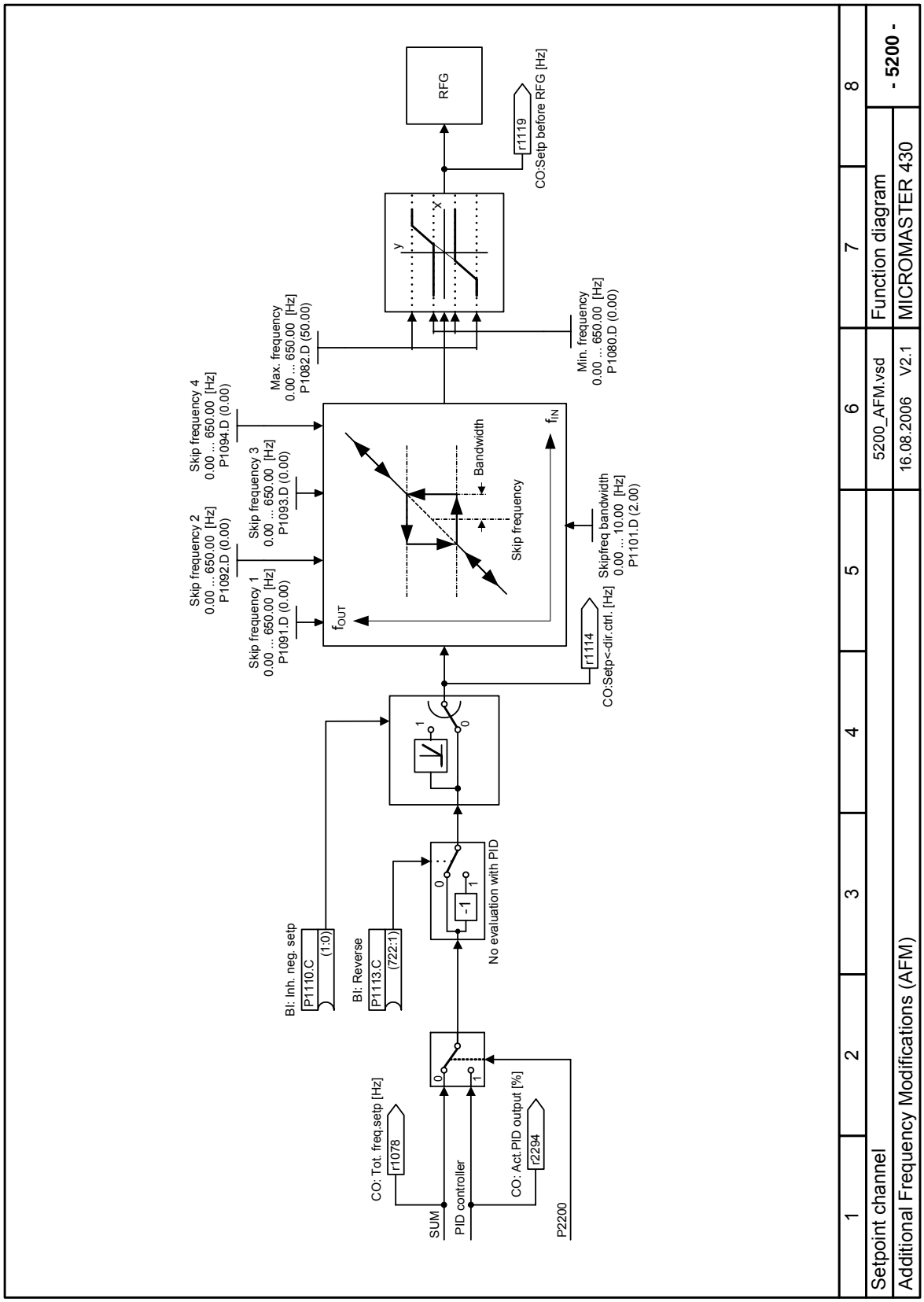
CO: Tot. freq.setp [Hz]
r1078
SUM
PID controller
CO: Act.PID output [%]
r2294
P2200
BI: Inh. neg. setp
P1110.C
(1:0)
BI: Reverse
P1113.C
(722:1)
No evaluation with PID
-1
Skip frequency 1
0.00 ... 650.00 [Hz]
P1091.D (0.00)
Skip frequency 2
0.00 ... 650.00 [Hz]
P1092.D (0.00)
Skip frequency 3
0.00 ... 650.00 [Hz]
P1093.D (0.00)
Skip frequency 4
0.00 ... 650.00 [Hz]
P1094.D (0.00)
Max. frequency
0.00 ... 650.00 [Hz]
P1082.D (50.00)
Min. frequency
0.00 ... 650.00 [Hz]
P1080.D (0.00)
Skipfreq bandwidth
0.00 ... 10.00 [Hz]
P1101.D (2.00)
CO:Setp<-dir.ctrl. [Hz]
r1114
Bandwidth
Skip frequency
RFG
CO:Setp before RFG [Hz]
r1119
1 2 3 4 5 6 7 8
Setpoint channel
Additional Frequency Modifications (AFM)
5200_AFM.vsd
16.08.2006 V2.1
Function diagram
MICROMASTER 430
- 5200 -

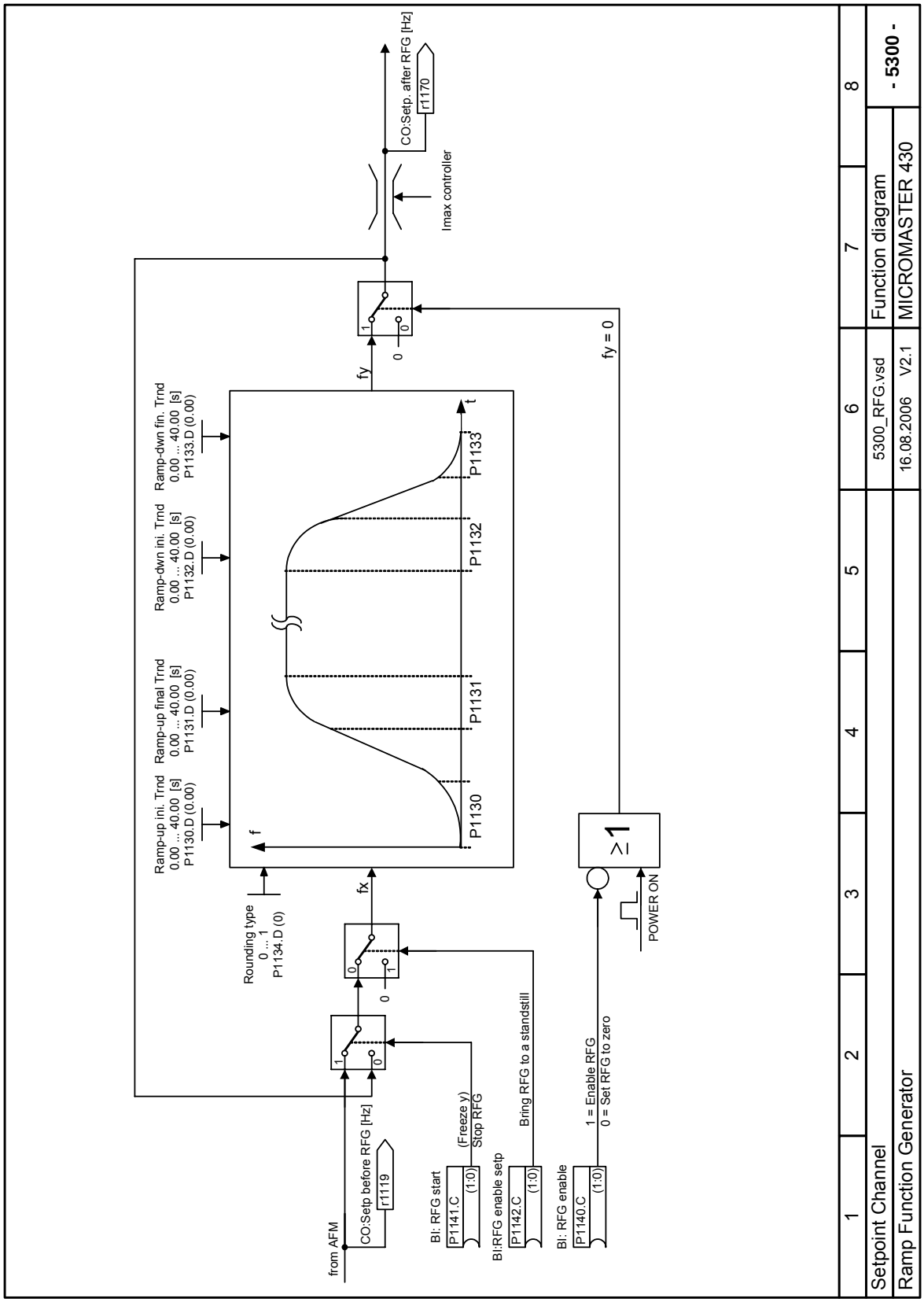
CO:Setp. after RFG [Hz]
r1170
Imax controller
fy
0
fy = 0
Ramp-dwn fin. Trnd
0.00 ... 40.00 [s]
P1133.D (0.00)
Ramp-dwn ini. Trnd
0.00 ... 40.00 [s]
P1132.D (0.00)
Ramp-up final Trnd
0.00 ... 40.00 [s]
P1131.D (0.00)
Ramp-up ini. Trnd
0.00 ... 40.00 [s]
P1130.D (0.00)
f
t
P1133
P1132
P1131
P1130
≥1
POWER ON
Rounding type
0 ... 1
P1134.D (0)
fx
from AFM
CO:Setp before RFG [Hz]
r1119
BI: RFG start
P1141.C
(1:0)
(Freeze y)
Stop RFG
BI:RFG enable setp
P1142.C
(1:0)
Bring RFG to a standstill
BI: RFG enable
P1140.C
(1:0)
1 = Enable RFG
0 = Set RFG to zero
1
2
3
4
5
6
7
8
Setpoint Channel
Ramp Function Generator
5300_RFG.vsd
16.08.2006 V2.1
Function diagram
MICROMASTER 430
- 5300 -

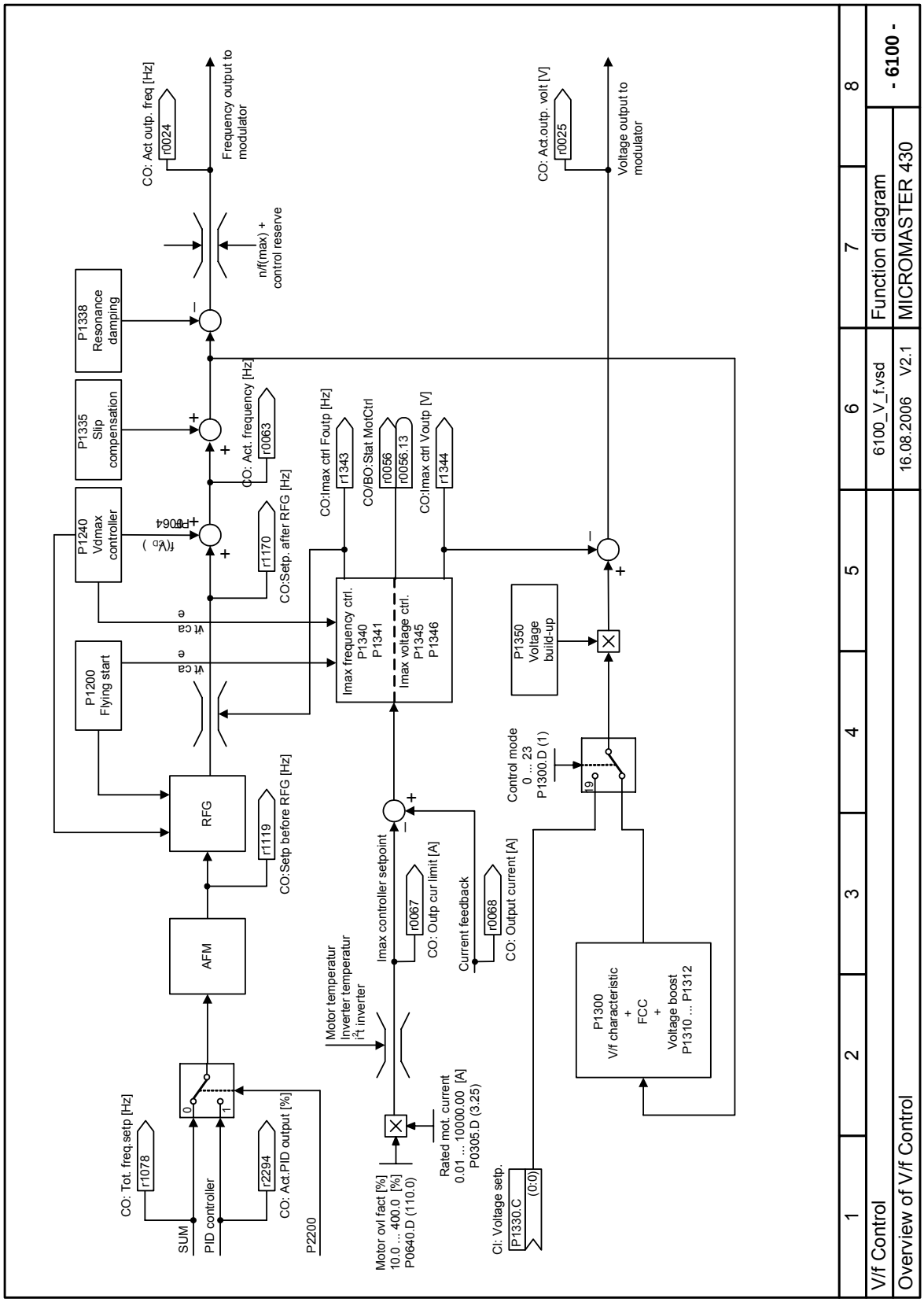
CO: Act outp. freq [Hz]
r0024
Frequency output to modulator
n/f(max) + control reserve
P1338 Resonance damping
P1335 Slip compensation
P1240 Vdmax controller
P1200 Flying start
CO: Act. frequency [Hz]
r0063
CO:Setp. after RFG [Hz]
r1170
CO:Setp before RFG [Hz]
r1119
RFG
AFM
CO: Tot. freq.setp [Hz]
r1078
SUM
PID controller
r2294
CO: Act.PID output [%]
P2200
CO:Imax ctrl Foutp [Hz]
r1343
CO/BO:Stat MotCtrl
r0056
r0056.13
CO:Imax ctrl Voutp [V]
r1344
Imax frequency ctrl.
P1340
P1341
Imax voltage ctrl.
P1345
P1346
Imax controller setpoint
r0067
CO: Outp cur limit [A]
Current feedback
r0068
CO: Output current [A]
Motor temperatur
Inverter temperatur
i²t inverter
Motor ovl fact [%]
10.0 ... 400.0 [%]
P0640.D (110.0)
Rated mot. current
0.01 ... 10000.00 [A]
P0305.D (3.25)
CI: Voltage setp.
P1330.C
(0:0)
P1350 Voltage build-up
Control mode
0 ... 23
P1300.D (1)
P1300 V/f characteristic + FCC + Voltage boost P1310 ... P1312
CO: Act.outp. volt [V]
r0025
Voltage output to modulator
1
2
3
4
5
6
7
8
V/f Control
6100_V_f.vsd
Function diagram
- 6100 -
Overview of V/f Control
16.08.2006 V2.1
MICROMASTER 430

5 Faults and Alarms

5.1 Fault messages

In the event of a failure, the inverter switches off and a fault code appears on the display.

NOTE
To reset the fault code, one of three methods listed below can be used:
1. Cycle the power to the drive.
2. Press the button on the BOP-2.
3. Via Digital Input 3 (default setting)

Fault messages are stored in parameter r0947 under their code number (e.g. F0003 = 3). The associated error value is found in parameter r0949. The value 0 is entered if a fault has no error value. It is furthermore possible to read out the point in time that a fault occurred (r0948) and the number of fault messages (P0952) stored in Parameter r0947.

F0001 Overcurrent STOP II

Quit
Remove fault and reset fault memory by
- disconnecting the drive converter from the line supply and powering-up again
- Press the Fn key on the BOP-2
- Acknowledge fault P2103, P2104
- P0952 (complete fault memory)

Cause
- short-circuit at the output
- ground fault
- excessively large motor (the motor power rating P0307 is greater than the inverter power r0206)
- defective final stage (end stage)

Diagnosis & Remedy
Please check the following:
- are the cable lengths within the limit values ?
- does the motor cable or motor have either a short-circuit or ground fault ?
- do the motor parameters correspond to those of the motor being used ?
- is the motor overloaded or stalled (locked rotor) ?
- increase the accelerating time.
- reduce the gain
- use a motor with a lower power rating
- is the stator resistance value (P0350) correct ?

F0002 Overvoltage STOP II

Quit
Refer to F0001.

Cause
- DC link voltage (r0026) higher than the overvoltage threshold (refer to parameter r0026)
- ground fault

Diagnosis & Remedy
Please check the following:
- is the line supply voltage within the permissible range?
- has the DC current DC link monitoring been enabled (P1240) and correctly parameterized?
- extend the deceleration ramp (ramp-down time P1121, P1135)
- remove the ground fault
- is the required braking power within the permissible limits?

NOTE
- a higher moment of inertia requires longer deceleration times; if required, use a braking resistor.
- overvoltage can either be caused by an excessively high line supply voltage or by the fact that the motor is generating (regenerative mode).
- the motor can be generating as it is decelerating quickly or due to the fact that an active load is driving the motor.

F0003 Undervoltage STOP II

Quit
Refer to F0001.

Cause
- line voltage failed
- shock stressing outside the permissible limits.

Diagnosis & Remedy
Please check the following:
- is the line supply voltage within the permissible range?
- is the line supply voltage stable with respect to sporadic failures and voltage dips (brown-outs) ?

F0004 Inverter overtemperature STOP II

Quit
Refer to F0001.

Cause
- inadequate cooling
- ambient temperature is too high.

ambient temperature is too high.

Diagnosis & Remedy
Please check the following:
- is the pulse frequency P1800 set to the factory setting ? If required reset P1800.
- does the ambient temperature lie within the permissible limits ?
- reduce the load and / or ensure adequate cooling

Please check the following:
- does the fan rotate if the inverter is operational ?

F0005 Inverter I2T STOP II

Quit
Refer to F0001.

Cause
- inverter overloaded.
- load duty cycle too high.
- the motor power rating (P0307) is greater than that of the inverter (r0206).
- 100 % overload reached.

Diagnosis & Remedy
Please check the following:
- does the load duty cycle lie within the permissible limits?
- use a motor with a lower rating (motor power P0307 is greater than Is inverter power r0206)

F0011 Motor overtemperature STOP II

Quit
Refer to F0001.

Cause
Motor overloaded

Diagnosis & Remedy
Please check the following:
- is the load cycle correct ?
- are the rated/nominal motor overtemperatures correct (P0626-P0628) ?
- is the alarm threshold correct for the motor temperature (P0604) ?

F0012 No inverter temperature signal STOP I

Quit
Refer to F0001.

Cause
- wire breakage of the inverter-temperature sensor (heatsink)

Diagnosis & Remedy
- replace the inverter

F0015 No motor temperature signal STOP II

Quit
Refer to F0001.

Cause
- motor temperature sensor either short-circuited or open-circuit.
- if it is identified that a signal has been lost, then the temperature monitoring changes-over to monitoring based on the thermal-motor model.

F0020 Line supply phase missing STOP II

Quit
Refer to F0001.

Cause
- a fault is output if one of the three input phases is missing, the pulses are enabled and a load is present

Diagnosis & Remedy
Please check the following:
- are the power connections ok ?

F0021 Ground fault STOP II

Quit
Refer to F0001.

Cause
- the fault occurs if the sum of the phase currents is greater than 5 % of the inverter rated current.

NOTE
- this fault only occurs for inverters with 3 current sensors (sizes D to F, GX, FX).

Diagnosis & Remedy
Please check the following:
- are the connections at the motor terminal boxes o.k. ?
- are the motor cable connections at the inverter o.k. ?

F0022 Hardware monitoring active STOP II

Quit
Refer to F0001.

Cause
This fault (r0947 = 22 and r0949 = 1) occurs under the following circumstances:
(1) DC link overcurrent condition = IGBT short-circuit
(2) Braking chopper short-circuit
(3) Ground fault
(4) I/O module not correctly inserted
For the following sizes the above faults can occur:
- size A to C (1),(2),(3),(4)
- size D to E (1),(2), (4)
- size F (1),(2)

The following faults only occur in conjunction with sizes FX / GX:
- UCE faults are identified if r0947 = 22 and the fault value r0949 = 12 or 13 or 14.
- I2C bus error is identified if r0947 = 22 and the fault value r0949 = 21 (power-down and then power-up again).

NOTE
All of these faults are assigned to a signal in the power module. This means that it is not possible to determine which fault actually occurred.

Diagnosis & Remedy
You must first identify as to whether the fault is permanent (i.e. the inverter cannot be started without the fault occurring) or it sporadically occurs (occasionally occurs or under certain operating conditions).
Permanent fault F0022:
- check whether the I/O module is correctly inserted (refer to the Operating Instructions).
- is there a ground fault or short-circuit at the inverter output or at an IGBT?
  You can identify this by disconnecting the motor cable.
  In the case that the fault occurs, if all of the external cables (with the exception from the line supply voltage) are disconnected, then with a high degree of probability, the drive unit is defective and must be repaired.

Sporadic fault F0022:
- this fault should be treated as "overcurrent". If fault F0022 sporadically occurs, the causes can be as follows:
- sudden load changes or mechanical obstructions
- extremely short ramp-up times (accelerating times)

F0023 Output fault STOP II

Quit
Refer to F0001.

Cause
- one output phase has not been correctly connected.

Diagnosis & Remedy
Please check the following:
- are the connections at the motor terminal box o.k. ?
- are the motor cable connections at the inverter o.k. ?

F0035 Restart after n STOP II

Quit
Refer to F0001.

Cause
- restart fault after n attempts, refer to P1211

F0041 Failure, motor data identification STOP II

Quit
Refer to F0001.

Cause
Motor data identification run unsuccessful (refer to fault value r0949):
- r0949 = 0: Load missing.
- r0949 = 1: Current limit value reached during identification.
- r0949 = 2: Identified stator resistance less than 0.1% or greater than 100%.
- r0949 = 30: Current controller at voltage limit value
- r0949 = 40: Identified data set inconsistent; at least one identification run unsuccessful

NOTE
Percentage values based on the impedence Zb = Vmot,rated / sqrt(3) / Imot,rated

Diagnosis & Remedy
Please check the following:
- r0949 = 0: Is the motor connected to the inverter ?
- r0949 = 1-40: Is the motor data in P0304-P0311 correct ?
- r0949 = 1-40: Motor circuit configuration correct (star, delta configuration) ?

F0051 Parameter EEPROM fault STOP II

Quit
Refer to F0001.

Cause
- read or write operation while saving parameters in the EEPROM was unsuccessful.

Diagnosis & Remedy
- reset to factory setting and then re-parameterize
- if required, change the drive

F0052 Power stack fault STOP II

Quit
Refer to F0001.

Cause
- read error, power data or invalid power module data.

Diagnosis & Remedy
- change the drive

F0053 I/O EEPROM fault STOP II

Quit
Refer to F0001.

Cause
- fault with I/O EEPROM read operation or invalid data.

Diagnosis & Remedy
Please check the following:
- check I/O data and if required repeat the operation
- the installation of the I/O module in the inverter if required, replace the I/O module

F0054 Incorrect I/O module STOP II

Quit
Refer to F0001.

Cause
- incorrect I/O module inserted.
- no ID of the I/O module found, no data.

Diagnosis & Remedy
Please check the following:
- check I/O data, if required repeat the operation
- the installation of the I/O module in the inverter if required, replace the I/O module

F0060 Asic time slice overflow STOP II

Quit
Refer to F0001.

Cause
- internal communications failure/error

Diagnosis & Remedy
- if the error still occurs, replace the inverter.
- contact customer service!

F0070 CB setpoint fault STOP II

Quit
Refer to F0001.

Cause
- no setpoints received via the communications bus during the telegram failure time. Triggered by A0702 / A0703 / A0704

Diagnosis & Remedy
- check the communications module (CB) and communications partner.
- check connection to communication partners and ensure valid control word (see A0702 / A0703 / A0704)

F0071 USS(BOP link) setpoint fault STOP II

Quit
Refer to F0001.

Cause
- no setpoint was received via the USS during the telegram off time

Diagnosis & Remedy
- check USS master

F0072 USS(COMM link) setpoint fault STOP II

Quit
Refer to F0001.

Cause
- no setpoints received via the USS during the telegram off time

Diagnosis & Remedy
- check USS master

F0080 ADC input signal lost STOP II

Quit
Refer to F0001.

Cause
- wire breakage
- signal outside the limit values

F0085 External fault STOP II

Quit
Refer to F0001.

Cause
- external fault as a result of command input via terminals.

Diagnosis & Remedy
- inhibit terminal input to initiate fault.

F0090 Signal loss, encoder STOP II

Quit
Refer to F0001.

Cause
- encoder signal between the encoder and inverter is interrupted
- excessively large difference between the setpoint (reference) and actual frequency

Diagnosis & Remedy
Please check the following:
- is there an integrated encoder? If there is no integrated encoder, then set P0400 = 0.
- the connection between the encoder and the inverter
- is the encoder faulty? (select P1300 = 0, operation with fixed speed, check the encoder signal in r0061)
- increase the encoder signal threshold in P0492, P0494

F0101 Stack overflow STOP II

Quit
Refer to F0001.

Cause
- software error or processor failure

Diagnosis & Remedy
- carry-out self-test routines

F0221 PID feedback below the minimum value STOP II

Quit
Refer to F0001.

Cause
- PID feedback below the minimum value P2268.

Diagnosis & Remedy
- change value of P2268.
- set feedback gain.

F0222 PID feedback above maximum value STOP II

Quit
Refer to F0001.

Cause
- PID feedback above maximum value P2267.

Diagnosis & Remedy
- change value of P2267.
- set the feedback gain.

F0422 No load applied to inverter STOP II

Quit
Refer to F0001.

Cause
No Load is applied to the inverter.
As a result, some functions may not work as under normal load conditions.

F0450 Failure BIST tests STOP II

Quit

Refer to F0001.

Cause

Self-test routine unsuccessful (refer to fault value r0949):

- r0949 = 1: Self-test routine for power module components unsuccessful
- r0949 = 2: Self-test routine for closed-loop control module components unsuccessful
- r0949 = 4: Several function tests were unsuccessful
- r0949 = 8: Several tests carried-out at the I/O module were unsuccessful (only MICROMASTER 420)
- r0949 = 16: Failure of the internal RAM at the switch-on test

Diagnosis & Remedy

- the drive is functional, but several functions are not correctly executed.
- replace the drive

F0452 Load torque fault detected STOP II

Quit

Refer to F0001.

Cause

- load conditions at the motor signify a load torque fault (e.g. belt failure) or a mechanical fault

Diagnosis & Remedy

Please check the following:

- no braking, failure or destruction of the mechanical drive transmission line
- if required, lubricate the mechanical drive transmission line.

If you are using an external encoder, please check the following parameter settings:

- P2192 (delay time, load torque monitoring)

If you are operating within a specific speed range, please check the following:

- P2182 (load torque monitoring F1)
- P2183 (load torque monitoring F1f2)
- P2184 (load torque monitoring F1f3)
- P2185 (upper torque threshold 1)
- P2186 (lower torque threshold 1)
- P2187 (upper torque threshold 2)
- P2188 (lower torque threshold 2)
- P2189 (upper torque threshold 3)
- P2190 (lower torque threshold 3)
- P2192 (delay time, load torque monitoring)

5.2 Alarm Messages

Alarm messages are stored in parameter r2110 under their code number (e.g. A0503 = 503) and can be read out from there.

A0501 Current limit value

Cause
- the motor power rating does not correspond to the inverter power rating
- motor cables are too long
- ground fault

Diagnosis & Remedy

Please check the following:
- does the motor power rating (P0307) match the inverter power rating (r0206) ?
- are the limit values for the cable lengths maintained ?
- does the motor cable or motor have a short-circuit or ground fault ?
- do the motor parameters correspond to those of the motor being used ?
- stator resistance value (P0350) correct ?
- is the motor overloaded or is the rotor locked (cannot rotate) ?
- ramp-up time P1120 too low ?

A0502 Overvoltage limit value

Cause
- the overvoltage limit value has been reached (actual value of the DC link voltage r0026 greater than r1242).

Diagnosis & Remedy
- if this alarm is permanently displayed, check the inverter input voltage.
- is the DC link voltage controller (Vdc_max controller) de-activated (refer to parameter P1240) ?
- short ramp times and/or large flywheel masses (moment of inertia) ?

A0503 Undervoltage limit value

Cause
- line supply has failed.
- line voltage and therefore also the DC link voltage (r0026) below the defined limit value (refer to parameter r0026).

Diagnosis & Remedy
- check the line voltage.

A0504 Inverter overtemperature

Cause
- alarm threshold of the inverter heatsink temperature was exceeded; this results in a reduction of the pulse frequency and/or the output frequency (dependent on the parameterization in (P0610).

Diagnosis & Remedy

Please check the following:
- is the ambient temperature within the permissible limits ?
- are the load and load duty cycle within the permissible limits ?

A0505 Inverter I2T

Cause
- overload alarm limit P0294 is exceeded (refer to utilization r0036)
- the pulse frequency and/or the output frequency is reduced as a function of the setting of parameter P0290.

Diagnosis & Remedy
- check whether the load duty cycle lies within the permissible limits.

A0506 Inverter load duty cycle

Cause
- difference between the temperature at the heatsink and IGBT exceeds the alarm limit values.

Diagnosis & Remedy
- please ensure that the load duty cycle and load surge lie within the permissible limits.

A0511 Motor overtemperature

Cause
- motor is overloaded.
- load duty cycle is exceeded.

Diagnosis & Remedy

Check, independently of the type of temperature monitoring:
- P0604 alarm threshold, motor overtemperature
- P0625 motor ambient temperature

If P0601 = 0 or 1, please check the following:
- is the motor data correct (rating plate)?, if not, carry-out a fast commissioning routine
- precise temperature values from the motor identification routine (P1910=1).
- is the motor weight correct (P0344)?
- the permissible overtemperature can be changed using P0626, P0627, P0628, if the motor is not a standard Siemens motor.

If P0601 = 2, then please check the following:
- is the temperature displayed in r0035 plausible?
- is an KTY84 temperature sensor being used? (others are not supported).

A0522 Read I2C, time exceeded

Cause
- cyclic access to UCE values and power module data via i2c bus (only for sizes FX and GX) is faulted.

A0523 Output fault

Cause
- an output cable is not connected.

Diagnosis & Remedy
- alarm can be suppressed.

A0541 Motor data identification routine active

Cause
- motor data identification routine (P1910) selected and is active

A0571 Auto restart after fault present

A0590 Alarm, no signals from the speed encoder

Cause
- no speed encoder signals

Diagnosis & Remedy

Stop the inverter, and
- check the speed encoder, if an encoder is not being used, set P0400 to 0.
- check the encoder connections
- check whether the encoder is operating correctly (set P1300 = 0 and operate the drive at a fixed speed and check the encoder signal in r0061
- increase the permissible speed deviation in P0492

A0600 RTOS data loss alarm

Cause
- time slice overflow was identified

Diagnosis & Remedy
- use lower baud rate for USS
- de-activate inverter functions

A0700 CB alarm 1

Cause
- - The parameter or configuring settings by the PROFIBUS master are invalid

Diagnosis & Remedy
- Correct the PROFIBUS configuration
- refer to the CB User Manual

A0701 CB alarm 2

Cause
- CB-(communications module)-specific

Diagnosis & Remedy
- refer to the CB User Manual

A0702 CB alarm 3

Cause
- The link to the PROFIBUS is interrupted

Diagnosis & Remedy
- Check connector, cable and PROFIBUS master
- refer to the CB User Manual

A0703 CB alarm 4

Cause
- No setpoints, or invalid setpoints (control word = 0) are being received from the PROFIBUS master

Diagnosis & Remedy
- Check setpoints from the PROFIBUS master. Switch SIMATIC CPU to "RUN"
- refer to the CB User Manual

A0704 CB alarm 5

Cause
- At least one configured internode transmitter is not yet active, or has failed

Diagnosis & Remedy
- Activate internode transmitter
- refer to the CB User Manual

A0705 CB alarm 6

Cause
- No actual values received from inverter

Diagnosis & Remedy
- fault is in inverter
- refer to the CB User Manual

A0706 CB alarm 7

Cause
- PROFIBUS-DP communication board: Software error

Diagnosis & Remedy
- fault on the PROFIBUS-DP communication board, for details see diagnostic parameter
- refer to the CB User Manual

A0707 CB alarm 8

Cause
- CB-(Communications module)-specific

Diagnosis & Remedy
- refer to the CB User Manual

A0708 CB alarm 9

Cause
- CB-(Communications module)-specific

Diagnosis & Remedy
- refer to the CB User Manual

A0709 CB alarm 10

Cause
- CB-(Communications module)-specific

Diagnosis & Remedy
- refer to the CB User Manual

A0710 CB communications error

Cause
- loss of communications with the CB (communications module)

Diagnosis & Remedy
- check the CB hardware

A0711 CB communications error

Cause
- CB (communications module) signals a communications error.

Diagnosis & Remedy
- check the CB parameters

A0910 Vdc-max controller disabled/switched-out

Cause
- Vdc max controller was de-activated, as it was not able to keep the DC link voltage (r0026) within the limit values (refer to r0026 and P1240).

This occurs,
- if the line supply voltage is permanently too high.
- if the motor is driven by an active load, which means that the motor goes into regenerative operation.
- while decelerating (short down-ramps P1121) for extremely high load torques

Diagnosis & Remedy

Please check the following:
- is the input voltage (P0756) within the permissible range ?
- are load duty cycle and load limits within the permissible limits ?

A0911 Vdc-max controller active

Cause
- Vdc max controller is active
- the ramp-down times are automatically increased in order to keep the DC link voltage (r0026) within the limit values (refer to r0026 and P1240).

A0920 ADC parameters not correctly set

Cause

ADC parameters should not be set to identical values, as this would lead to illogical results.
- Index 0: Parameter settings for output identical.
- Index 1: Parameter settings for input identical.
- Index 2: Parameter settings for input do not correspond to ADC type.

A0921 DAC parameters not correctly set

Cause

ADC parameters should not be set to identical values, as this would lead to illogical results.
- Index 0: Parameter settings for output identical.
- Index 1: Parameter settings for input identical.
- Index 2: Parameter settings for input do not correspond to ADC type.

A0922 No load at the inverter

Cause
- no load is connected to the inverter.
- therefore several functions can run differently than under normal load conditions.

A0952 Load fault detected

Cause

- load conditions at the motor indicate a load fault or mechanical fault.

Diagnosis & Remedy

Please check the following:

- no braking, failure or destruction of the mechanical transmission line
- if required, lubricate the mechanical transmission line.

If you are using an external encoder, please check the following parameter settings:

- P2192 (delay time, load torque monitoring)

If you are using a specific speed range, then please check the following:

- P2182 (load torque monitoring F1)
- P2183 (load torque monitoring F1f2)
- P2184 (load torque monitoring F1f3)
- P2185 (upper torque threshold 1)
- P2186 (lower torque threshold 1)
- P2187 (upper torque threshold 2)
- P2188 (lower torque threshold 2)
- P2189 (upper torque threshold 3)
- P2190 (lower torque threshold 3)
- P2192 (delay time, load torque monitoring)

6 Abbreviations

AC	Alternating current
AD	Analog digital converter
ADC	Analog digital converter
ADR	Address
AFM	Additional frequency modification
AG	Automation unit
AIN	Analog input
AOP	Advanced operator panel
AOUT	Analog output
ASIC	Application-specific integrated circuit
ASP	Analog setpoint
ASVM	Asymmetric space vector modulation
BCC	Block check character
BCD	Binary-coded decimal code
BI	Binector input
BICO	Binector / connector
BO	Binector output
BOP	Basic operator panel
C	Commissioning
CB	Communication board
CCW	Counter-clockwise
CDS	Command data set
CFM	Cubic feet per minute (1 l/s ≅ 2,1 CFM)
CI	Connector input
CM	Configuration management
CMD	Commando
CMM	Combimaster
CO	Connector output
CO/BO	Connector output / Binector output
COM	Common (terminal that is connected to NO or NC)
COM-Link	Communication link
CT	Commissining, ready to run
CT	Constant torque
CUT	Commissining, run, ready to run
CW	Clockwise
DA	Digital analog converter
DAC	Digital analog converter
DC	Direct current
DDS	Drive data set
DIN	Digital input
DIP	DIP switch
DOUT	Digital output
DS	Drive state
EEC	European Economic Community
EEPROM	Electrical erasable programmable read-only memory

ELCB	Earth leakage circuit breaker
EMC	Electro-magnetic compatibility
EMF	Electromotive force
EMI	Electro-magnetic interference
ESB	Equivalent circuit
FAQ	Frequently asked questions
FB	Function block
FCC	Flux current control
FCL	Fast current limit
FF	Fixed freqeuncy
FFB	Free function block
FOC	Field orientated control
FSA	Frame size A
GSG	Getting started guide
GUI ID	Global unique identifier
HIW	Main actual value
HSW	Main setpoint
HTL	High-threshold logic
I/O	Input and output
IBN	Commissioning
IGBT	Insulated gate bipolar transistor
IND	Sub-index
JOG	Jog
KIB	Kinetic buffering
LCD	Liguid crystal display
LED	Light emitting diode
LGE	Length
MHB	Motor holding brake
MM4	MICROMASTER 4th. Generation
MOP	Motor potentiometer
NC	Normally closed
NO	Normally open
NPN	Negative positive negative
OPI	Operating instructions
PDS	Power drive system
PID	PID controller (proportional, integral, derivative)
PKE	Parameter ID
PKW	Parameter ID value
PLC	Programmable logic controller
PLI	Parameter list
PNP	Positive negative positive
POT	Potentiometer
PPO	Parameter process data object
PTC	Positive temperature coefficient
PWE	Parameter value
PWM	Pulse-width modulation
PX	Power extension
PZD	Process data
QC	Quick commissioning

RAM	Random-access memory
RCCB	Residual current circuit breaker
RCD	Residual current device
RFG	Ramp function generator
RFI	Radio-frequency interference
RPM	Revolutions per minute
SCL	Scaling
SDP	Status display panel
SLVC	Sensorless vector control
STW	Control word
STX	Start of text
SVM	Space vector modulation
TTL	Transistor-transistor logic
USS	Universal serial interface
VC	Vector control
Vdc	DC-link voltage
VT	Variable torque
ZSW	Status word
ZUSW	Additional setpoint

Suggestions and/or Corrections

To Siemens AG Automation & Drives Group SD SPA PM4 P.O. Box 3269 D-91050 Erlangen Federal Republic of Germany Email: documentation.sd@siemens.com	**Suggestions** **Corrections** For Publication/Manual: MICROMASTER 430 Parameter List User Documentation
From Name: Company/Service Department Address: _____ _____ Phone: _____ / _____ Fax: _____ / _____	Order number: 6SE6400-5AF00-0BP0 Date of Issue: 10/06 Should you come across any printing errors when reading this publication, please notify us on this sheet. Suggestions for improvement are also welcome.

Siemens AG
Automation and Drives Group (A&D)
Standard Drives (SD) Division
Postfach 3269, D-91050 Erlangen
Federal Republic of Germany

© Siemens AG 2002, 2005, 2006
Subject to change without prior notice

Siemens Aktiengesellschaft

Order No.: 6SE6400-5AF00-0BP0

Excellence in Automation & Drives: Siemens