SINAMICS G120

Power Module PM240

Hardware Installation Manual · 07/2009

SINAMICS

Answers for industry.

SIEMENS

SIEMENS

SINAMICS

SINAMICS G120
Power Module PM240

Hardware Installation Manual

Introduction 1

Safety notes 2

Installing/Mounting 3

Connecting 4

Service and maintenance 5

Technical specifications 6

Accessories 7

Appendix A

Edition 07/2009

07/2009
A5E00807525B AD

Legal information

Warning notice system

This manual contains notices you have to observe in order to ensure your personal safety, as well as to prevent damage to property. The notices referring to your personal safety are highlighted in the manual by a safety alert symbol, notices referring only to property damage have no safety alert symbol. These notices shown below are graded according to the degree of danger.

⚠DANGER
indicates that death or severe personal injury **will** result if proper precautions are not taken.

⚠WARNING
indicates that death or severe personal injury **may** result if proper precautions are not taken.

⚠CAUTION
with a safety alert symbol, indicates that minor personal injury can result if proper precautions are not taken.

CAUTION
without a safety alert symbol, indicates that property damage can result if proper precautions are not taken.

NOTICE
indicates that an unintended result or situation can occur if the corresponding information is not taken into account.

If more than one degree of danger is present, the warning notice representing the highest degree of danger will be used. A notice warning of injury to persons with a safety alert symbol may also include a warning relating to property damage.

Qualified Personnel

The device/system may only be set up and used in conjunction with this documentation. Commissioning and operation of a device/system may only be performed by **qualified personnel**. Within the context of the safety notes in this documentation qualified persons are defined as persons who are authorized to commission, ground and label devices, systems and circuits in accordance with established safety practices and standards.

Proper use of Siemens products

Note the following:

⚠WARNING
Siemens products may only be used for the applications described in the catalog and in the relevant technical documentation. If products and components from other manufacturers are used, these must be recommended or approved by Siemens. Proper transport, storage, installation, assembly, commissioning, operation and maintenance are required to ensure that the products operate safely and without any problems. The permissible ambient conditions must be adhered to. The information in the relevant documentation must be observed.

Trademarks

All names identified by ® are registered trademarks of the Siemens AG. The remaining trademarks in this publication may be trademarks whose use by third parties for their own purposes could violate the rights of the owner.

Disclaimer of Liability

We have reviewed the contents of this publication to ensure consistency with the hardware and software described. Since variance cannot be precluded entirely, we cannot guarantee full consistency. However, the information in this publication is reviewed regularly and any necessary corrections are included in subsequent editions.

Siemens AG
Industry Sector
Postfach 48 48
90026 NÜRNBERG
GERMANY

Ordernumber: A5E00807525B AD
Ⓟ 07/2009

Copyright © Siemens AG 2006, 2007, 2009.
Technical data subject to change

Table of contents

1 Introduction 7
2 Safety notes 13
3 Installing/Mounting 19
3.1 Air cooling requirements 20
3.2 Dimensions and drill pattern 22
3.3 Control Unit installation 32
4 Connecting 35
4.1 Power distribution systems 36
4.2 Operation with ungrounded (IT) supplies 37
4.3 Operation with Residual Current Devices (RCD) 38
4.4 Motor cable length and cross section 39
4.5 Access to power and motor terminals 42
4.6 Power and motor connections 44
4.7 DC 24V power supply connection (FSGX) 46
4.8 Adjusting the fan voltage (FSGX) 47
4.9 Line contactor control (FSGX) 48
4.10 ESD guidelines 49
5 Service and maintenance 51
5.1 Maintenance 51
5.2 Replacing components 52
5.2.1 Replacing the cooling fan 53
5.2.2 Replacing the cooling fan fuses and the cooling fan relay (FSGX) 56
5.2.3 Power block replacement (FSGX) 57
5.2.4 Control Interface Module replacement (FSGX) 61
6 Technical specifications 65
7 Accessories 75
7.1 Reactor and filter 76
7.1.1 Line reactor 79
7.1.2 Line filter 85
7.1.3 Output reactor 89
7.1.4 Sine-wave filter 95
7.2 Brake chopper (FSGX) 101
7.2.1 Installing the Brake chopper (FSGX) 102
7.2.2 Connecting the brake chopper to the PM 104

7.3 Braking Resistor ... 107
7.3.1 Mounting the braking resistors ... 107
7.3.2 Connecting the braking resistor ... 113
7.3.3 Protecting the braking resistor ... 115
7.3.4 Technical specifications of the braking resistor ... 116

7.4 Brake Relay ... 118
7.4.1 Mounting the Brake Relay ... 118
7.4.2 Connecting the Brake Relay ... 120
7.4.3 Technical specifications of the Brake Relay ... 122

7.5 DIN rail mounting kit ... 123

7.6 Screen termination kit ... 123

A Appendix ... 125

A.1 Electromagnetic Compatibility ... 125

A.2 Definition of the EMC Environment and Categories ... 126

A.3 EMC Overall Performance ... 128

A.4 Standards ... 130

A.5 Abbreviations ... 131

Index ... 133

Introduction 1

The SINAMICS G120 range

The SINAMICS G120 inverter has been designed for the accurate and efficient control of the speed and torque for three-phase motors. The SINAMICS G120 system comprises two basic modules, the Control Unit (CU) and the Power Module (PM).

The Control Units are divided into the following:

- CU without fail-safe functions
  - CU230P-2 HVAC for pump and fan applications with Modbus RTU interface
  - CU230P-2 CAN for pump and fan applications with CANopen interface
  - CU230P-2 DP for pump and fan applications with PROFIBUS DP interface
  - CU240E economic version of the CU240 Control Units (e.g. less terminals, no encoder interface)
  - CU240S standard version of the CU240 Control Units
  - CU240S DP like CU240S plus PROFIBUS DP interface (PROFIdrive Profile V4.1)
  - CU240S PN like CU240S plus PROFINET interface (PROFIdrive Profile V4.1)
- CU with fail-safe functions
  - CU240S DP-F like CU240S DP plus integrated fail-safe functions
  - CU240S PN-F like CU240S PN plus integrated fail-safe functions

The Power Modules differ concerning the supply voltage and the way of realizing the motor braking function:

- PM240 Power Module with resistor braking and dc braking functions, supply voltage 3 AC 400 V
- PM250 Power Module with regenerative braking function, supply voltage 3 AC 400 V
- PM260 Power Module with regenerative braking function, supply voltage 3 AC 690 V

Control Units and Power Modules are allowed to be combined in any possible configuration.

Exceptions:

The CU230P-2 with firmware V4.2 can not be combined with PM240 FSGX or PM260. These combinations will be allowed with firmware V4.3.

See the respective manual for specific functions and features.

Available Power Modules PM240

There are the following types of PM240 Power Modules with braking capacity (resistor braking). The given power rating values are defined for "high overload" operation.

- **Unfiltered PM240 Power Modules**
  380 V … 480 V, IP20 or IPXXB, Frame size A … frame size GX, 0,37 kW … 200 kW
- **PM240 Power Modules with integrated filter Class A**
  380 V … 480 V, IP20, Frame sizes B … F, 2,2 kW … 75 kW.

Block diagram PM240, FSA … FSF

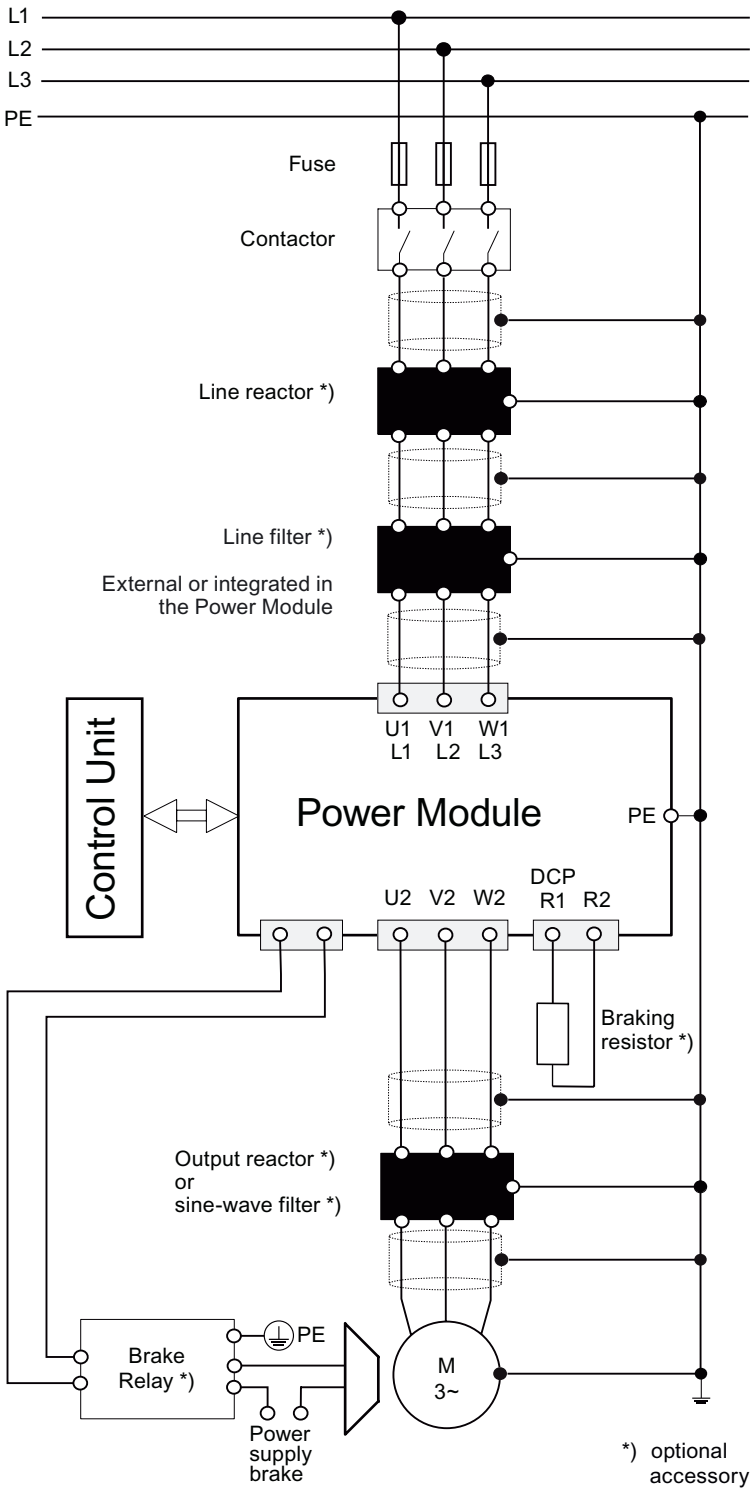

Figure 1-1 Power Module PM240, frame size A … frame size F (HO 0.37 kW … 110 kW)

Block diagram PM240, FSGX

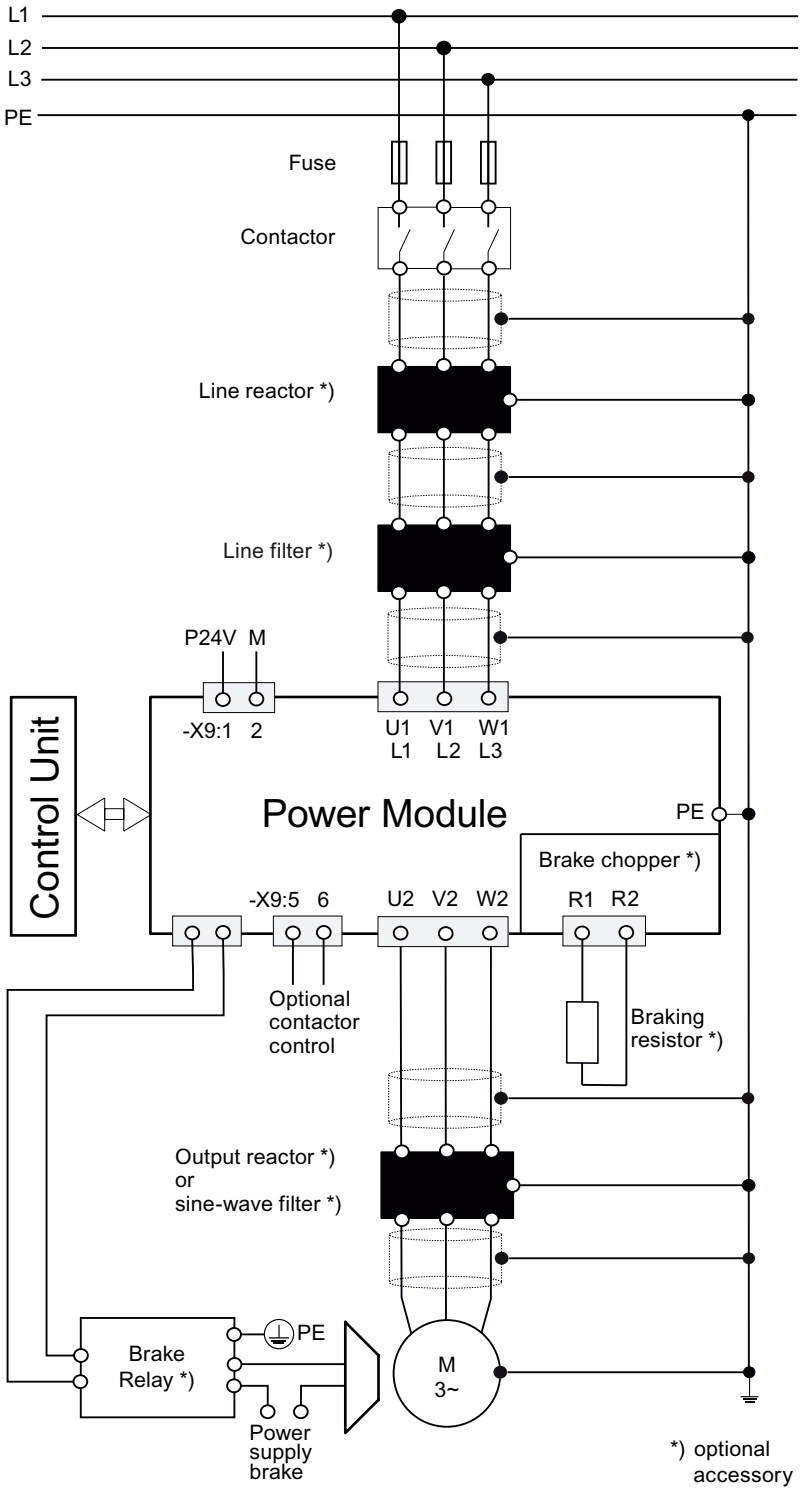

Figure 1-2 Power Module PM240, frame size GX (HO 132 kW … 200 kW)

Available technical documentation

Comprehensive information and support tools are available from the Service and Support internet site

- http://support.automation.siemens.com

You find there the following types of documentation:

- Getting Started
- Operating Instructions
- Hardware Installation Manual
- Function Manual
- Parameter Manual
- Product Information

Further internet addresses

You can download the respective documents for your inverter under the following links:

- SINAMICS G110
  http://www.siemens.com/sinamics-g110
- SINAMICS G120
  http://www.siemens.com/sinamics-g120
- SINAMICS G120D
  http://www.siemens.com/sinamics-g120d
- SIMATIC ET 200S FC
  http://www.siemens.com/et200s-fc
- SIMATIC ET 200pro FC
  http://www.siemens.com/et200pro-fc

Application examples

You find various application examples to the inverters under the following link:

- http://support.automation.siemens.com/WW/view/en/20208582/136000

Safety notes

2

Safety Instructions

The following Warnings, Cautions and Notes are provided for your safety and as a means of preventing damage to the product or components in the connected machines. This section lists Warnings, Cautions and Notes, which apply generally when handling the inverter, classified as General, Transport and Storage, Commissioning, Operation, Repair and Dismantling and Disposal.

Specific Warnings, Cautions and Notes that apply to particular activities are listed at the beginning of the relevant sections in this manual and are repeated or supplemented at critical points throughout these sections.

Please read the information carefully, since it is provided for your personal safety and will also help prolong the service life of your inverter and the equipment to which it is connected.

Common Instructions

It has to be ensured by the machine manufacturer, that the line-side overcurrent protection equipment interrupts within 5 s (immovable equipment and modules in immovable equipment) in the case of minimum fault current (current on complete insulation failure to accessible conductive parts that are not live during operation and maximum current loop resistance).

It has to be ensured by the machine manufacturer, that the voltage drop between the beginning of the load system and the power drive system during operation with rated values does not exceed 4 %.

General

⚠ WARNING

This equipment contains dangerous voltages and controls potentially dangerous rotating mechanical parts. Non-compliance with the warnings or failure to follow the instructions contained in this manual can result in loss of life, severe personal injury or serious damage to property.

Protection in case of direct contact by means of SELV / PELV is only permissible in areas with equipotential bonding and in dry indoor rooms. If these conditions are not fulfilled, other protective measures against electric shock must be applied e.g. protective insulation.

Only suitably qualified personnel should work on this equipment, and only after becoming familiar with all safety notices, installation, operation and maintenance procedures contained in this manual. The successful and safe operation of this equipment is dependent upon its proper handling, installation, operation and maintenance.

As the earth leakage for this product can be greater than 3.5 mA a.c., a fixed earth connection is required and the minimum size of the protective earth conductor shall comply with the local safety regulations for high leakage current equipment.

The power supply, DC and motor terminals, the brake and thermistor cables can carry dangerous voltages even if the inverter is inoperative. Wait at least five minutes to allow the unit to discharge after switching off the line supply before carrying out any installation work.

It is strictly prohibited for any mains disconnection to be performed on the motor-side of the system; any disconnection of the mains must be performed on the mains-side of the Inverter.

When connecting the line supply to the Inverter, make sure that the terminal case of the motor is closed.

This equipment is capable of providing internal motor overload protection according to UL508C. Refer to P0610 and P0335, i^2t is ON by default.

When changing from the ON to OFF-state of an operation if an LED or other similar display is not lit or active; this does not indicate that the unit is switched-off or powered-down.

The inverter must always be grounded.

Isolate the line supply before making or changing connections to the unit.

Ensure that the inverter is configured for the correct supply voltage. The inverter must not be connected to a higher voltage supply.

Static discharges on surfaces or interfaces that are not generally accessible (e.g. terminal or connector pins) can cause malfunctions or defects. Therefore, when working with inverters or inverter components, ESD protective measures should be observed.

Take particular notice of the general and regional installation and safety regulations regarding work on dangerous voltage installations (e.g. EN 50178) as well as the relevant regulations regarding the correct use of tools and personal protective equipment (PPE).

⚠ CAUTION

Children and the general public must be prevented from accessing or approaching the equipment!

This equipment may only be used for the purpose specified by the manufacturer. Unauthorized modifications and the use of spare parts and accessories that are not sold or recommended by the manufacturer of the equipment can cause fires, electric shocks and injuries.

NOTICE

Keep this manual within easy reach of the equipment and make it available to all users.

Whenever measuring or testing has to be performed on live equipment, the regulations of Safety Code BGV A2 must be observed, in particular § 8 "Permissible Deviations when Working on Live Parts". Suitable electronic tools should be used.

Before installing and commissioning, please read these safety instructions and warnings carefully and all the warning labels attached to the equipment. Make sure that the warning labels are kept in a legible condition and replace missing or damaged labels.

Transport and storage

⚠ WARNING

Correct transport, storage as well as careful operation and maintenance are essential for the proper and safe operation of the equipment.

⚠ CAUTION

Protect the equipment against physical shocks and vibration during transport and storage. It is important that the equipment is protected from water (rainfall) and excessive temperatures.

Commissioning

⚠ WARNING

Working on the equipment by unqualified personnel or failure to comply with warnings can result in severe personal injury or serious damage to material. Only suitably qualified personnel trained in the setup, installation, commissioning and operation of the product should carry out work on the equipment.

⚠ CAUTION

Cable connection

The control cables must be laid separately from the power cables. Carry out the connections as shown in the installation section in this manual, to prevent inductive and capacitive interference from affecting the correct function of the system.

Mechanical Installation

⚠ WARNING

To ensure the safe operation of the equipment, it must be installed and commissioned by qualified personnel in full compliance with the warnings laid down in this manual.

Take particular note of the general and regional installation and safety regulations regarding work on dangerous voltage installation (e.g. EN 61800-5-1) as well as the relevant regulations regarding the correct use of tools and personal protective equipment (PPE).

Electrical Installation

⚠ WARNING

Power and motor connections

A fixed location, non varying connection is necessary because of a leakage current > 3.5 mA.

The inverter must always be grounded. If it is not grounded correctly, extremely dangerous conditions may arise which could prove potentially fatal.

Isolate the mains electrical supply before making or changing connections to the unit.

The terminals of the Inverter can carry dangerous voltages even if the inverter is inoperative. Wait at least 5 minutes to allow the unit to discharge after switching off the line supply before carrying out any installation work.

When connecting the line supply to the inverter, make sure that the terminal case of the motor is closed.

When changing from the ON to OFF-state of an operation if an LED or other similar display is not lit or active; this does not indicate that the unit is switched-off or powered-down.

Ensure that the inverter is configured for the correct supply voltage – it must not be connected to a higher voltage supply.

⚠ WARNING

Filtered drives can only be used on power systems with grounded starpoint.

Operation

⚠ WARNING

The inverter operates at high voltages. When operating electrical devices, it is impossible to avoid applying hazardous voltages to certain parts of the equipment.

The power supply and motor terminals - and if available the DC terminals - can carry dangerous voltages even if the inverter is inoperative. Wait five minutes to allow the unit to discharge after switching off the line supply before carrying out any installation work.

Emergency Stop facilities according to EN 60204, IEC 204 (VDE 0113) must remain operative in all operating modes of the control equipment. Any disengagement of the Emergency Stop facility must not lead to an uncontrolled or an undefined restart of the equipment.

Wherever faults occurring in the control equipment can lead to substantial material damage or even grievous bodily injury (that is, potentially dangerous faults), additional external precautions must be taken or facilities provided to ensure or enforce safe operation, even when a fault occurs (e.g. independent limit switches, mechanical interlocks, etc.).

Certain parameter settings may cause the inverter to restart automatically after an input power failure, for example, the automatic restart function.

Motor parameters must be accurately configured for motor overload protection to operate correctly.

This equipment is suitable for use in a power system up to 10,000 symmetrical amperes (rms), for the maximum rated voltage + 10 % when protected by an appropriate standard fuse (refer to the catalogue for the type of fuse).

The Power Modules are components with a high leakage current!

Use of mobile radio device (e.g. telephones, walky-talkies) with a transmission power > 1 W in the immediate vicinity of the devices (< 1.5 m) can interfere with the functioning of the equipment!

⚠ CAUTION

The line filter conducts a high leakage current via the PE conductor. Due to the high leakage current a permanent PE connection for the line filter is required.

Furthermore, the following measures must be taken in accordance with EN 61800-5-1: Either protective ground conductor cross-sections ≥ 10 mm^2 (8 AWG) Cu or installation of a second protective ground conductor with both having the same cross-section as the line input cable.

Repair

⚠ WARNING
Repairs on equipment may only be carried out by Siemens Service, by repair centers authorized by Siemens or by authorized personnel who are thoroughly acquainted with all the warnings and operating procedures contained in this manual. Any defective parts or components must be replaced using parts contained in the relevant spare parts list. Disconnect the power supply before opening the equipment for access.

Dismantling and disposal

CAUTION
The packaging of the inverter is re-usable. Retain the packaging for future use. Easy-to-release screw and snap connectors allow you to break the unit down into its component parts. You can recycle these component parts, dispose of them in accordance with local requirements or return them to the manufacturer.

Installing/Mounting

3

⚠ WARNING
To ensure the safe operation of the equipment, it must be installed and commissioned by qualified personnel in full compliance with the warnings laid down in this manual. Take particular note of the general and regional installation and safety regulations regarding work on dangerous voltage installation (e.g. EN 61800-5-1) as well as the relevant regulations regarding the correct use of tools and personal protective equipment (PPE).

General rules for the environmental protection of the Power Modules

To ensure that the power module is installed in the correct environmental conditions, please ensure that you adhere to the following guidelines:

- The Power Module FSA … FSF is designed for IP20 protection. It is protected from the ingress of solid foreign objects ≥ 12.5 mm (≥ 0.49 inches)
- The Power Module FSGX is designed for IP20 or IPXXB protection. It is protected from the ingress of solid foreign objects ≥ 12.5 mm (≥ 0.49 inches) respectively from accessing dangerous parts with a finger
- The Power Module is not protected against the ingress of water
- The Power Module is designed to be installed in an electrical cabinet
- Keep the Power Module free from dust and dirt
- Keep the Power Module away from water, solvents and chemicals
  Take care to site the inverter away from potential water hazards, for example, do not install the inverter beneath pipes that are subject to condensation. Avoid installing the inverter where excessive humidity and condensation may occur
- Keep the Power Module within the maximum and minimum operating temperatures
- Ensure that the correct level of ventilation and air flow is provided
- Ensure that earthing and grounding practices for each Power Module and the cabinet follows the guidelines given in this document (Page 49)

⚠ CAUTION
The SINAMICS G120 Power Module MUST NOT be mounted horizontally.

3.1 Air cooling requirements

Installation and cooling

Make sure that there is an adequate airflow through the cubicle as follows:

1. Add the air flow values required for every Power Module (see following table) within the cubicle
2. Calculate the airflow required by components as reactor, filter, Control Unit and other electronic devices using the formula
   Air flow (l/s) = (Power loss (Watt) / ΔT) x 0.86
   (ΔT = Allowable temperature rise within the cubicle in °C).
   For the power losses of components see the following table
3. Add the airflow values of all components within the cubicle to get the complete air flow required
4. No equipment should be installed that could have a negative effect on the flow of cooling air
5. Make sure that the cooling vents in the Power Module are positioned correctly to allow the free movement of air
6. Avoid cooling air short circuit using air barriers, if necessary

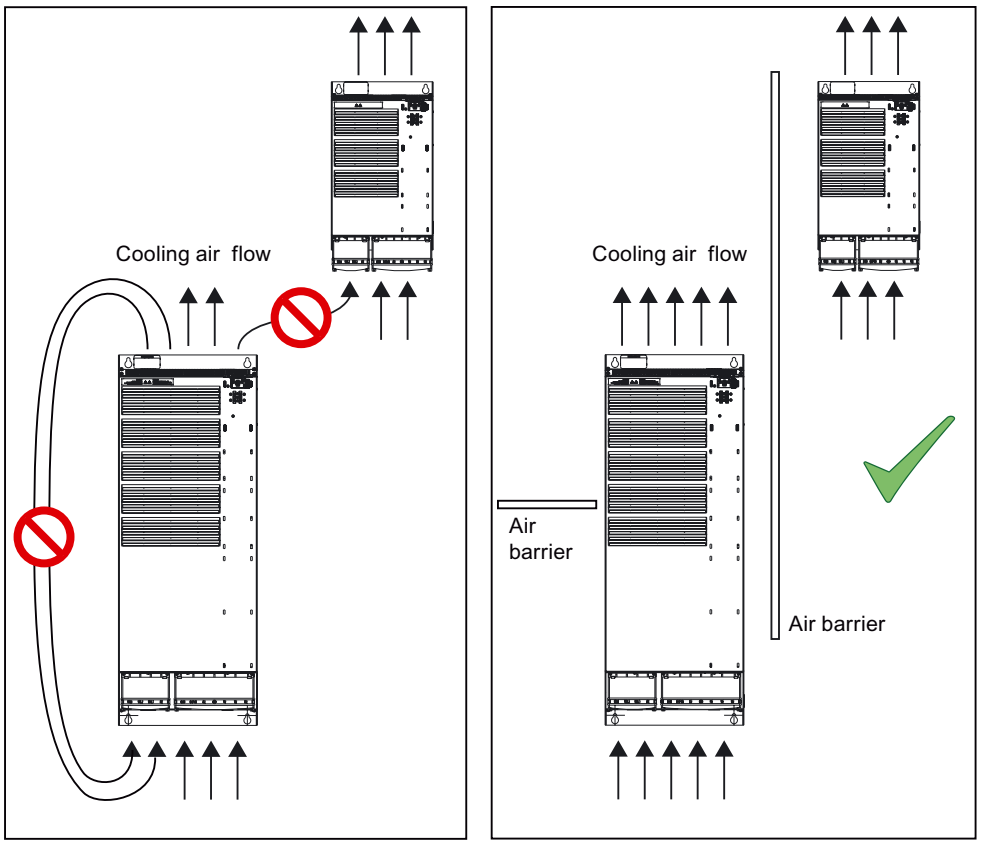

Figure 3-1 Air barriers for avoiding cooling air short circuits

7. Provide an adequate cubicle with sufficient air vent and suitable air strainer

Air cooling requirements

Table 3- 1 Air cooling requirements for operation with rated power (LO)

Frame size	LO power rating	Required cooling air flow	
		l/s	CFM
FSA	0.37 kW ... 1.5 kW	4.8	10
FSB	2.2 kW ... 4 kW	24	50
FSC	7.5 kW ... 15 kW	55	120
FSD	18.5 kW ... 30 kW	55	120
FSE	37 kW ... 45 kW	110	240
FSF	55 kW ... 132 kW	150	320
FSGX	160 kW ... 250 kW	360	760

Table 3- 2 Power losses of Power Module components in Watt

	For Power Module						
Power losses of …	FSA	FSB	FSC	FSD	FSE	FSF	FSGX
Power Module	100 … 110	140 … 180	240 … 400	440 … 720	1000 … 1300	1500 … 2500	3900 … 5500
Control Unit	<40						
Line reactor	6 … 12	9 … 27	37	90	170	210 … 280	230 … 310
Line filter	0.5 … 1.5	2.0 … 4.0	7.5 … 15	-	-	60	60
Output reactor	5	20	60	200	200 … 270	500	470 … 500
Sine-wave filter	32 … 60	65 … 110	120 … 200	235 … 190	305	350 … 575	250 … 380

The power losses of line reactor and line filter are valid for the following operating conditions:

- Rated input current
- 50 Hz line frequency

The power losses of Power Module, output reactor and sine-wave filter are valid for the following operating conditions:

- Rated output current
- 50 Hz output frequency
- 4 kHz pulse frequency (2 kHz pulse frequency for rated power > 75 kW)

Further information is given in the technical specifications.

3.2 Dimensions and drill pattern

Dimensions, drill patterns and minimum distances

The dimension drawings for all frame sizes for the SINAMICS G120 Power Module PM240 are shown in the figures and not true to scale.

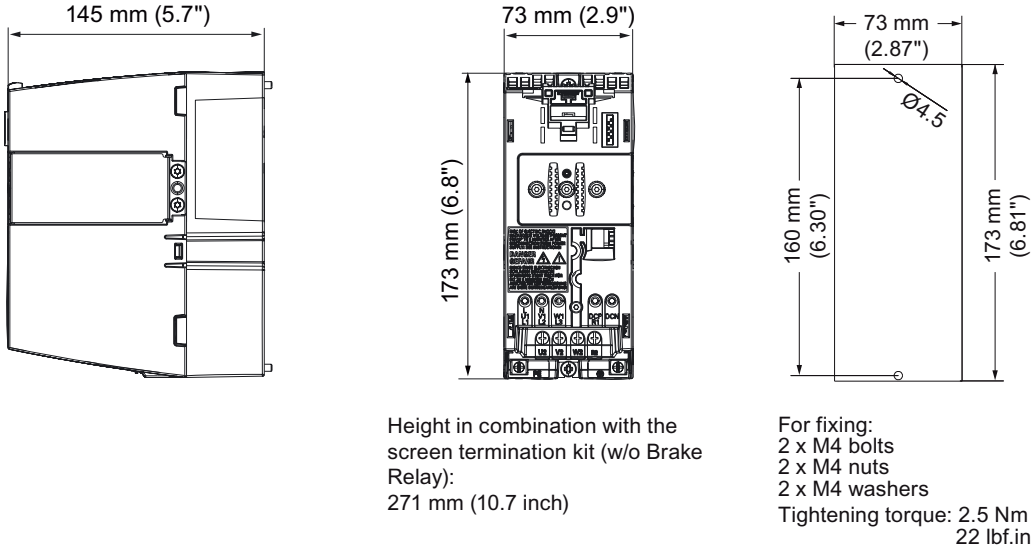

Figure 3-2 Dimensions and drill pattern, FSA (HO 0.37 kW ... 1.5 kW)

Table 3- 3 Minimum distances for mounting

Minimum distances FSA		Note
side by side	30 mm 1.18 inches	At max. environmental temperature of 40° C (104° F) and with max. HO load the Power Modules can be mounted adjacent to each other
above	100 mm 3.93 inches	
below	100 mm 3.93 inches	
front	40 mm 1.57 inches	Additional distance to the front with Control Unit CU240E
	65 mm 2.56 inches	Additional distance to the front with Control Units CU240S, CU240S DP, CU240S PN, CU240S DP-F and CU240S PN-F

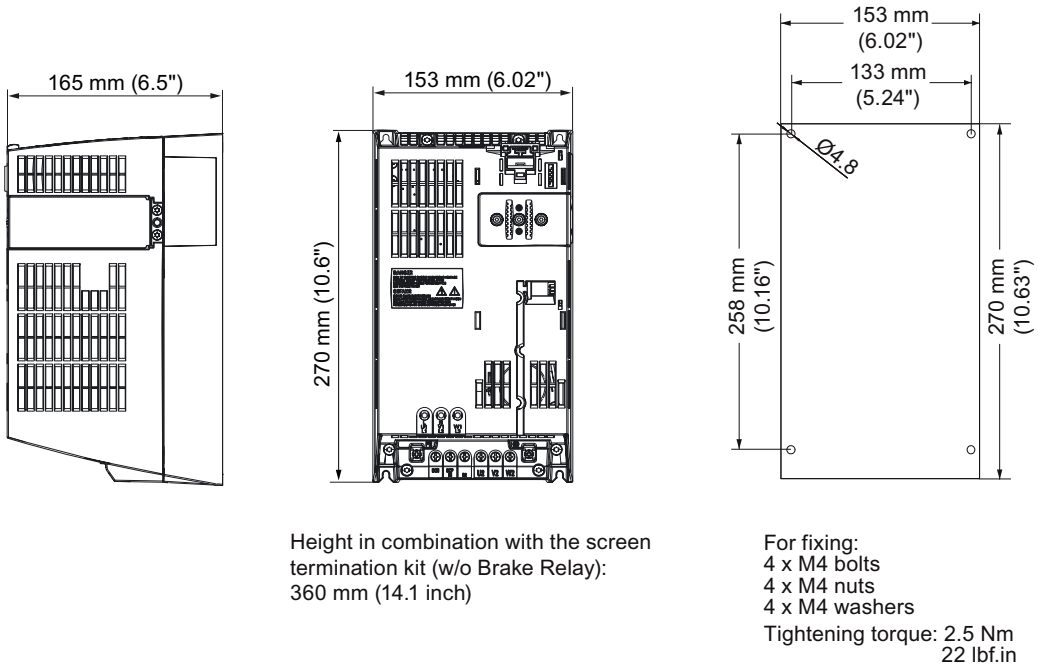

Figure 3-3 Dimensions and drill pattern, FSB (HO 2.2 kW ... 4 kW)

Table 3- 4 Minimum distances for mounting

Minimum distances FSB		Note
side by side	30 mm 1.18 inches	At max. environmental temperature of 40° C (104° F) and with max. HO load the Power Modules can be mounted adjacent to each other
above	100 mm 3.93 inches	
below	100 mm 3.93 inches	
front	40 mm 1.57 inches	Additional distance to the front with Control Unit CU240E
	65 mm 2.56 inches	Additional distance to the front with Control Units CU240S, CU240S DP, CU240S PN, CU240S DP-F and CU240S PN-F

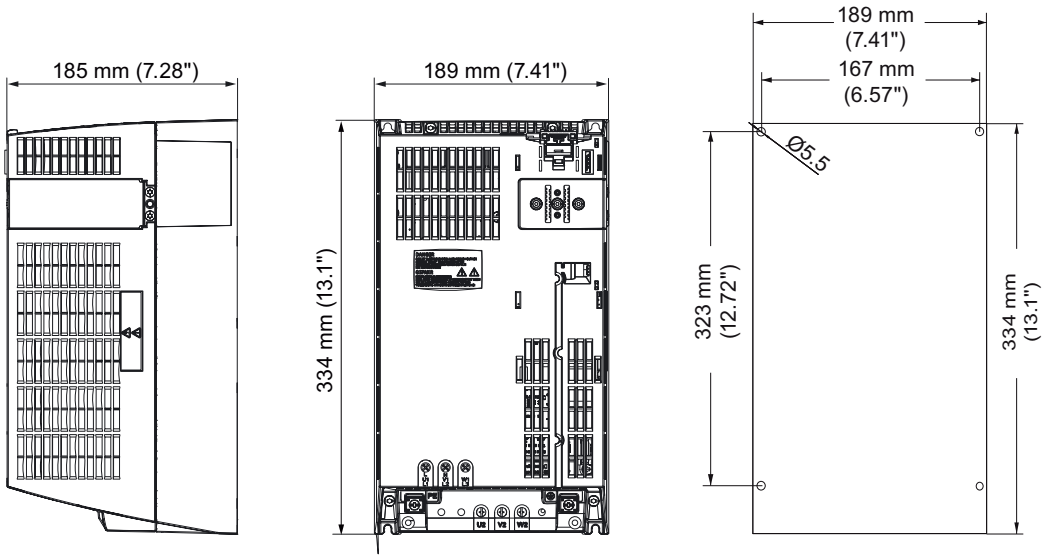

Height in combination with the screen termination kit (w/o Brake Relay):
432 mm (17.0 inch)

For fixing:
4 x M5 bolts
4 x M5 nuts
4 x M5 washers
Tightening torque: 2.5 Nm
22.1 lbf.in

Figure 3-4 Dimensions and drill pattern, FSC (HO 5.5 kW ... 11 kW)

Table 3- 5 Minimum distances for mounting

Minimum distances FSC		Note
side by side	50 mm 1.96 inches	At max. environmental temperature of 40° C (104° F) and with max. HO load the Power Modules can be mounted adjacent to each other
above	125 mm 4.92 inches	
below	125 mm 4.92 inches	
front	40 mm 1.57 inches	Additional distance to the front with Control Unit CU240E
	65 mm 2.56 inches	Additional distance to the front with Control Units CU240S, CU240S DP, CU240S PN, CU240S DP-F and CU240S PN-F

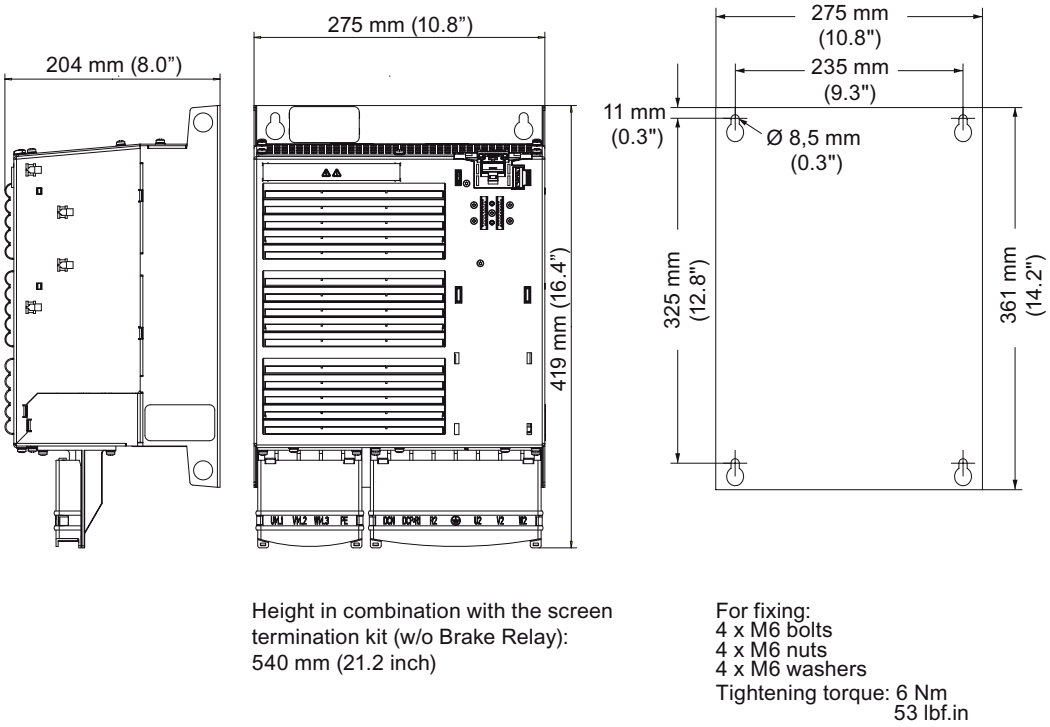

Figure 3-5 Dimensions and drill pattern, FSD unfiltered (HO 15 kW ... 22 kW)

Table 3- 6 Minimum distances for mounting

Minimum distances FSD		Note
side by side	0 mm 0 inches	
above	300 mm 11.81 inches	
below	300 mm 11.81 inches	
front	40 mm 1.57 inches	Additional distance to the front with Control Unit CU240E
	65 mm 2.56 inches	Additional distance to the front with Control Units CU240S, CU240S DP, CU240S PN, CU240S DP-F and CU240S PN-F

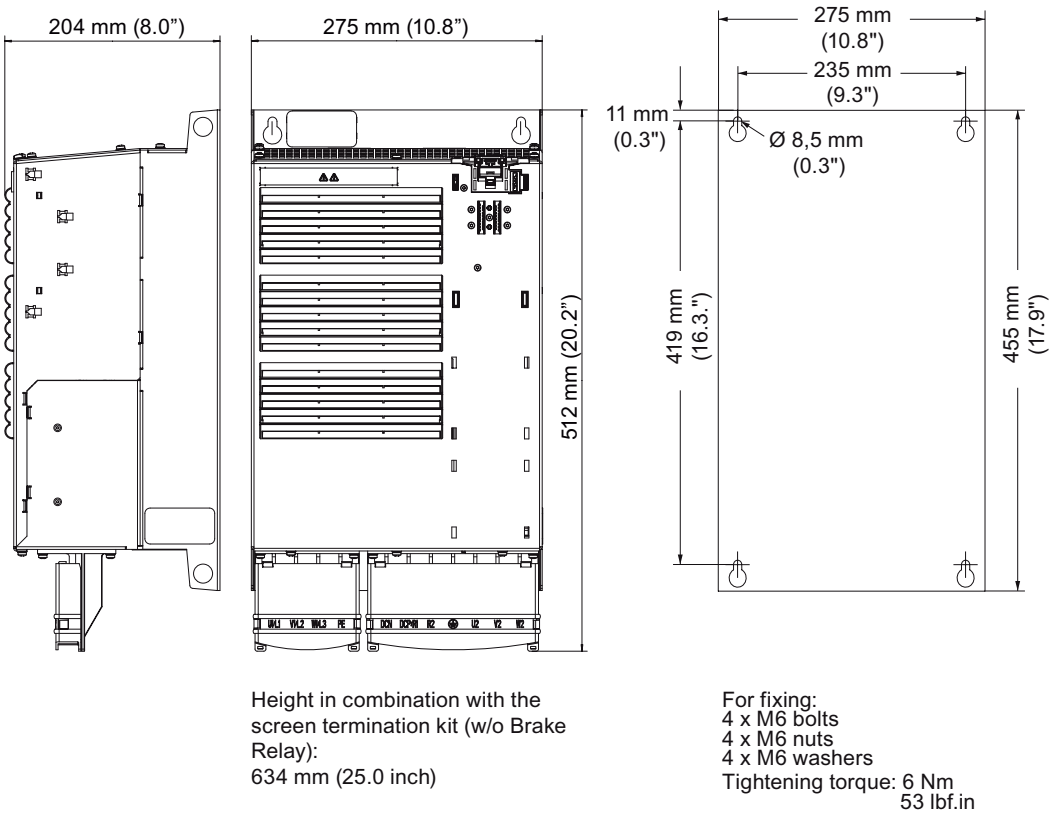

Figure 3-6 Dimensions and drill pattern, FSD filtered (HO 15 kW ... 22 kW)

Table 3- 7 Minimum distances for mounting

Minimum distances FSD		Note
side by side	0 mm 0 inches	
above	300 mm 11.81 inches	
below	300 mm 11.81 inches	
front	40 mm 1.57 inches	Additional distance to the front with Control Unit CU240E
	65 mm 2.56 inches	Additional distance to the front with Control Units CU240S, CU240S DP, CU240S PN, CU240S DP-F and CU240S PN-F

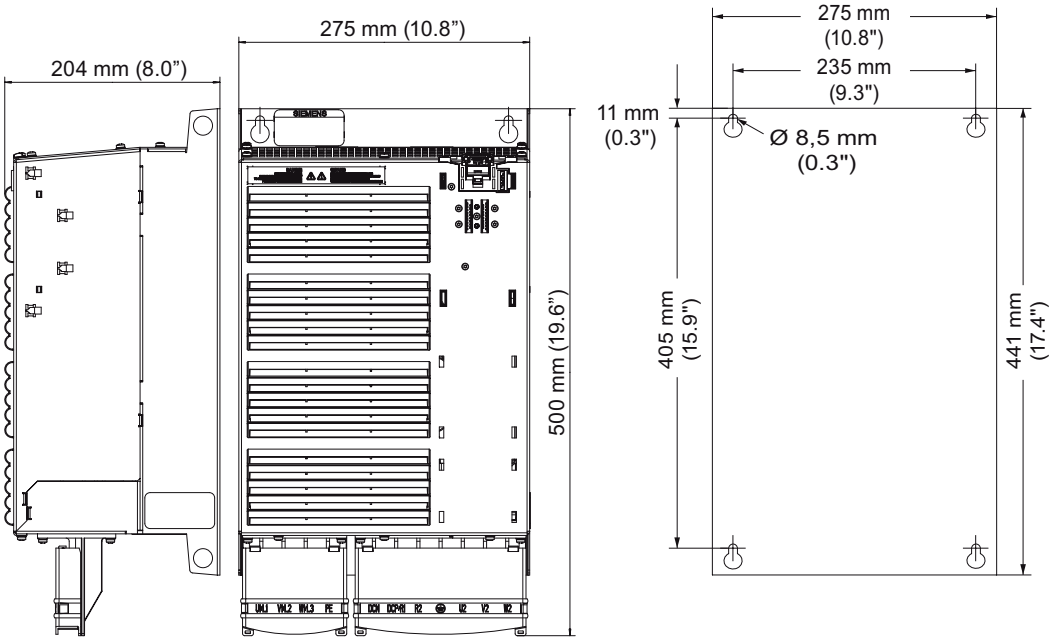

Height in combination with the screen termination kit (w/o Brake Relay):
622 mm (24.4 inch)

For fixing:
4 x M6 bolts
4 x M6 nuts
4 x M6 washers
Tightening torque: 6 Nm
53 lbf.in

Figure 3-7 Dimensions and drill pattern, FSE unfiltered (HO 30 kW ... 37 kW)

Table 3- 8 Minimum distances for mounting

Minimum distances FSE		Note
side by side	0 mm 0 inches	
above	300 mm 11.81 inches	
below	300 mm 11.81 inches	
front	40 mm 1.57 inches	Additional distance to the front with Control Unit CU240E
	65 mm 2.56 inches	Additional distance to the front with Control Units CU240S, CU240S DP, CU240S PN, CU240S DP-F and CU240S PN-F

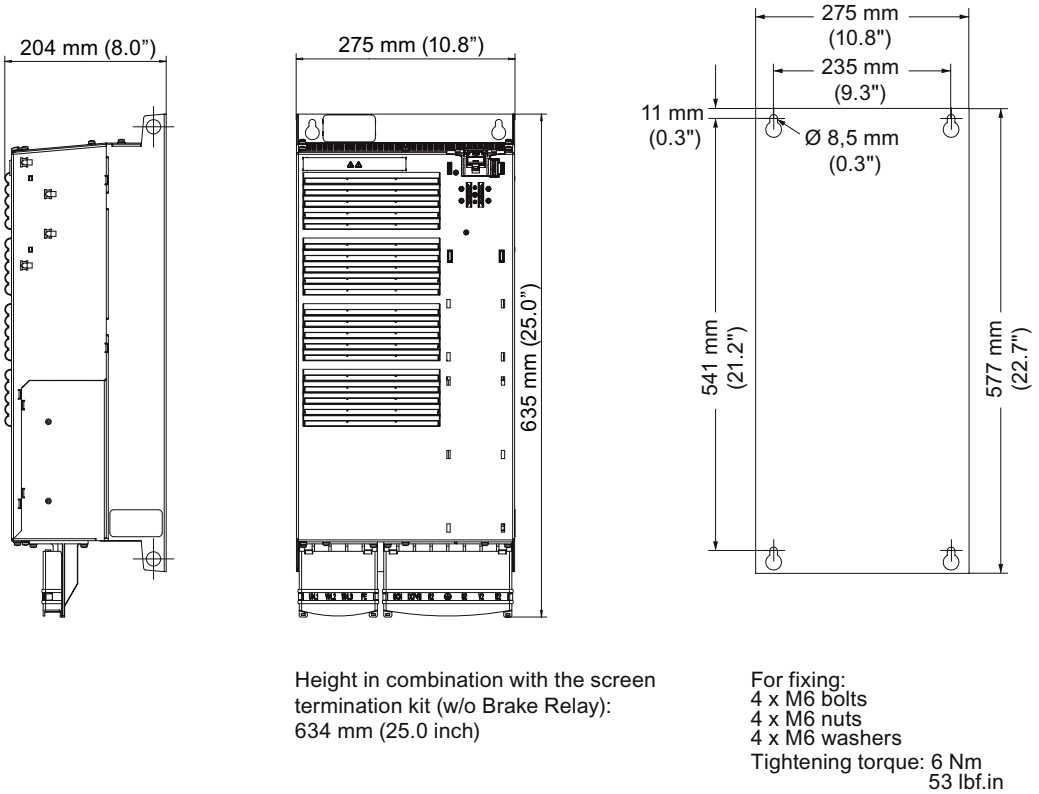

Figure 3-8 Dimensions and drill pattern, FSE filtered (HO 30 kW ... 37 kW)

Table 3- 9 Minimum distances for mounting

Minimum distances FSE		Note
side by side	0 mm 0 inches	
above	300 mm 11.81 inches	
below	300 mm 11.81 inches	
front	40 mm 1.57 inches	Additional distance to the front with Control Unit CU240E
	65 mm 2.56 inches	Additional distance to the front with Control Units CU240S, CU240S DP, CU240S PN, CU240S DP-F and CU240S PN-F

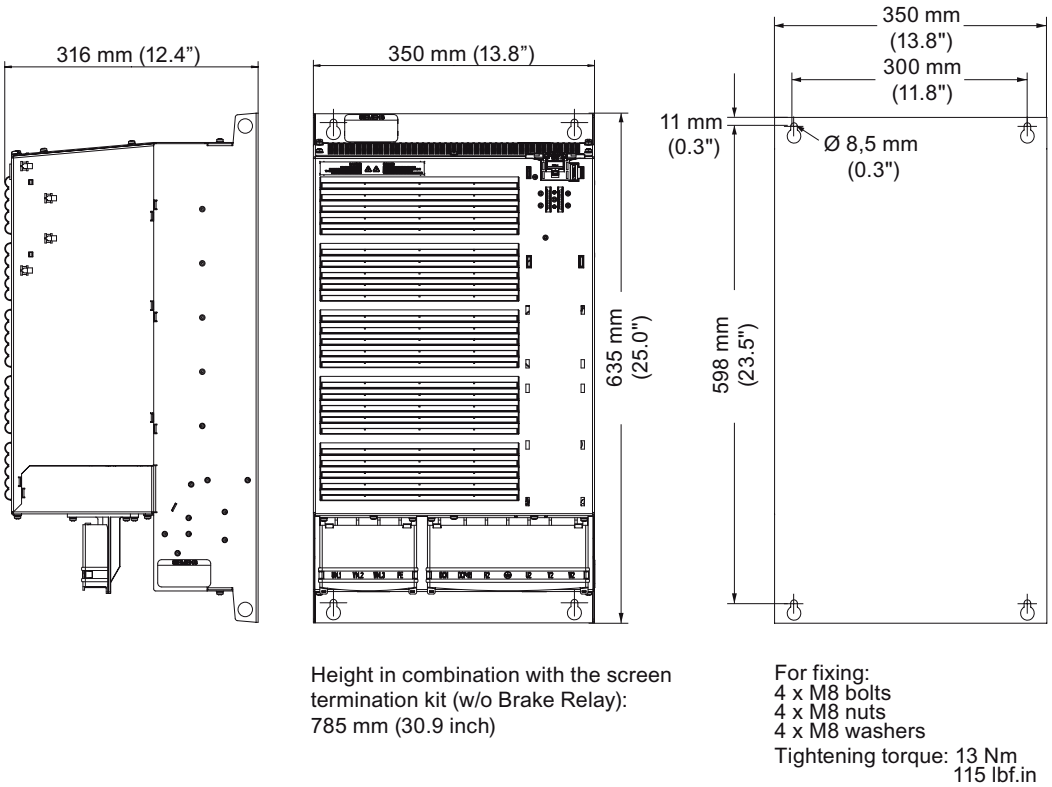

Figure 3-9 Dimensions and drill pattern, FSF unfiltered (HO 45 kW ... 110 kW)

Table 3- 10 Minimum distances for mounting

Minimum distances FSF		Note
side by side	0 mm 0 inches	
above	350 mm 13.77 inches	
below	350 mm 13.77 inches	
front	40 mm 1.57 inches	Additional distance to the front with control unit CU240E
	65 mm 2.56 inches	Additional distance to the front with Control Units CU240S, CU240S DP, CU240S PN, CU240S DP-F and CU240S PN-F

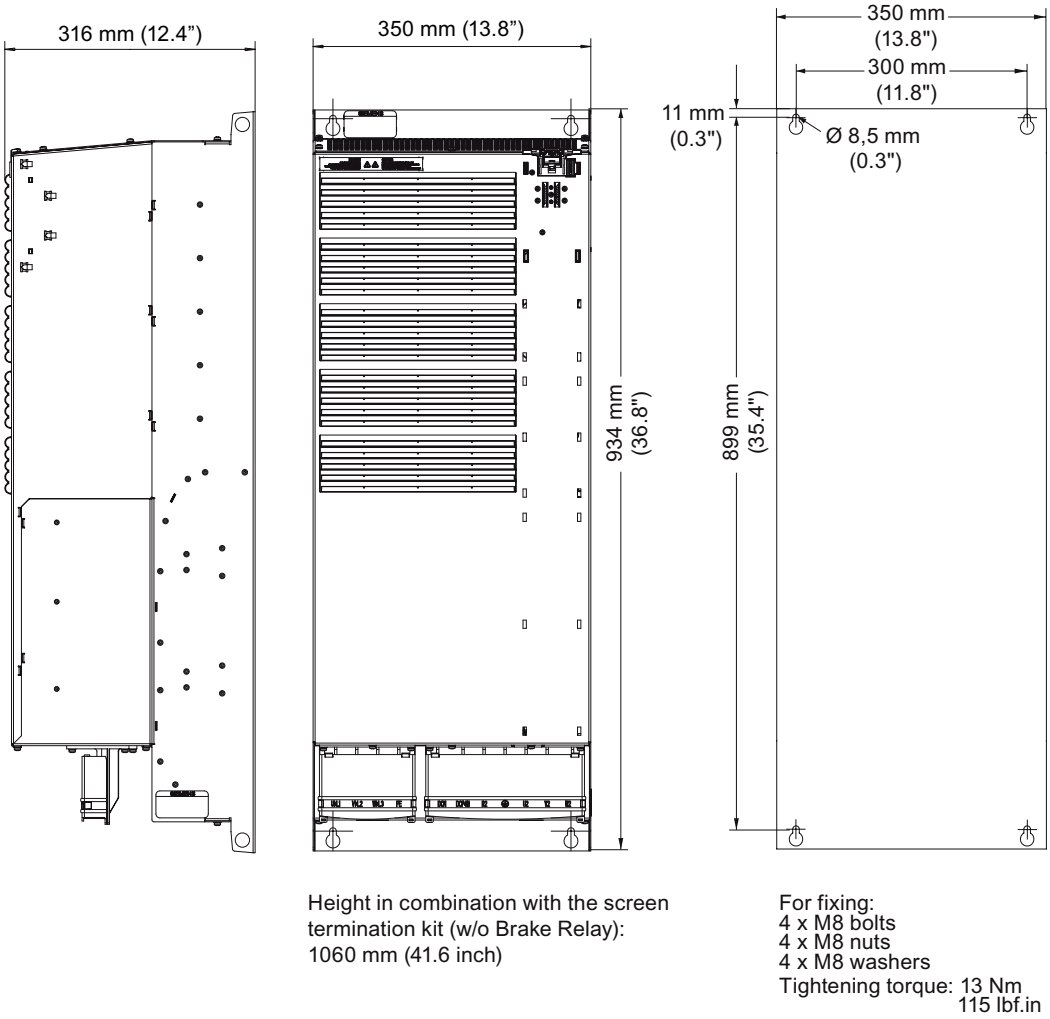

Figure 3-10 Dimensions and drill pattern, FSF filtered (HO 45 kW ... 110 kW)

Table 3- 11 Minimum distances for mounting

Minimum distances FSF		Note
side by side	0 mm 0 inches	
above	350 mm 13.77 inches	
below	350 mm 13.77 inches	
front	40 mm 1.57 inches	Additional distance to the front with control unit CU240E
	65 mm 2.56 inches	Additional distance to the front with Control Units CU240S, CU240S DP, CU240S PN, CU240S DP-F and CU240S PN-F

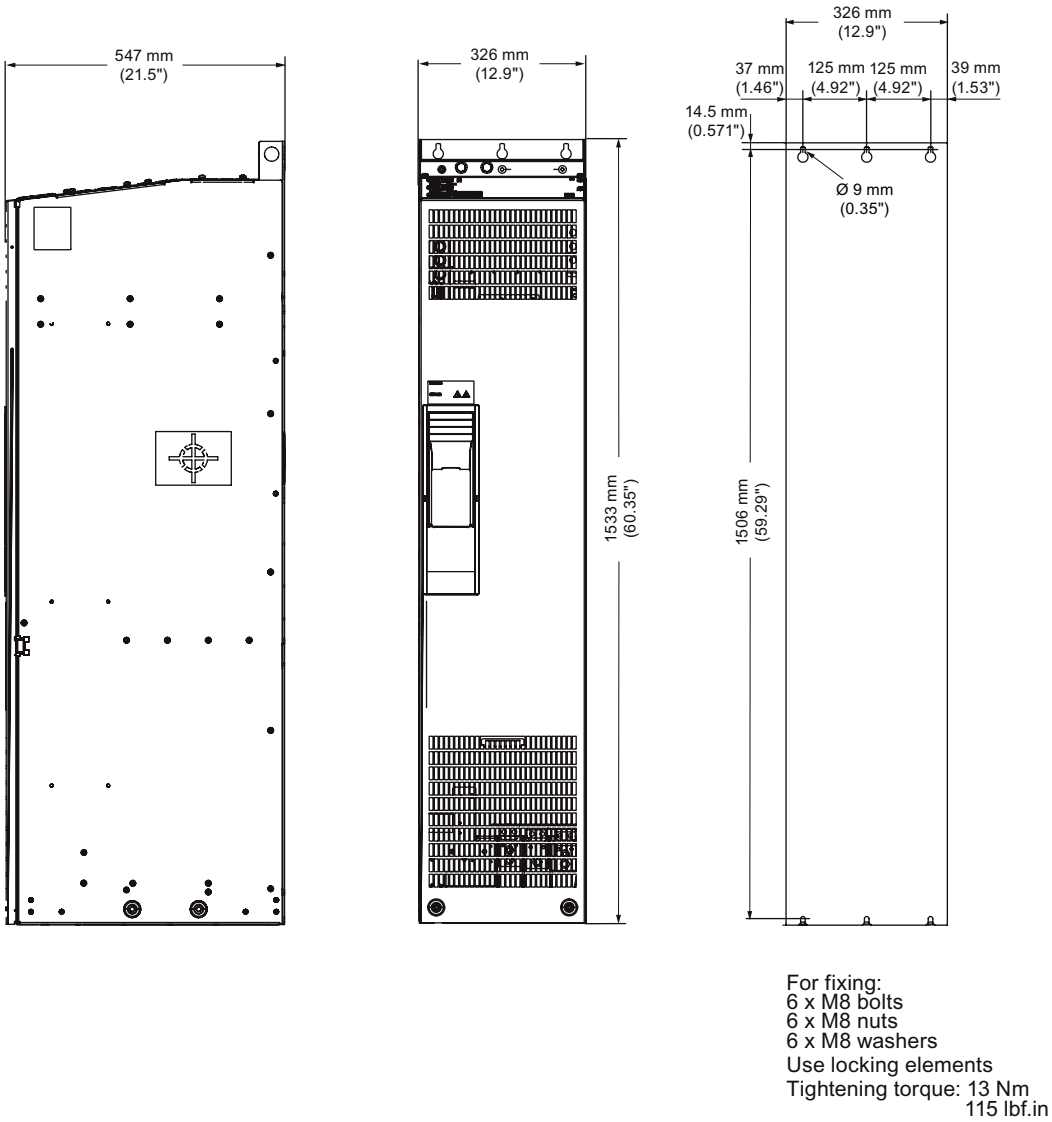

Figure 3-11 Dimensions and drill pattern, FSGX (HO 132 kW ... 200 kW)

Table 3- 12 Minimum distances for mounting

Minimum distances FSGX		Note
side by side	0 mm 0 inches	
above	250 mm 9.84 inches	
below	150 mm 5.91 inches	
front	50 mm 1.97 inches	The CU is mounted inside the Power Module housing and does not influence the PM dimensions

3.3 Control Unit installation

Fitting the CU to the PM FSA ... FSF

The Control Unit is snapped onto the Power Module as shown in the figure below. To disconnect the CU push the release button on top of the PM.

The process of fitting the Control Unit to the Power Module is the same technique independent from the type of Control Unit or Power Module.

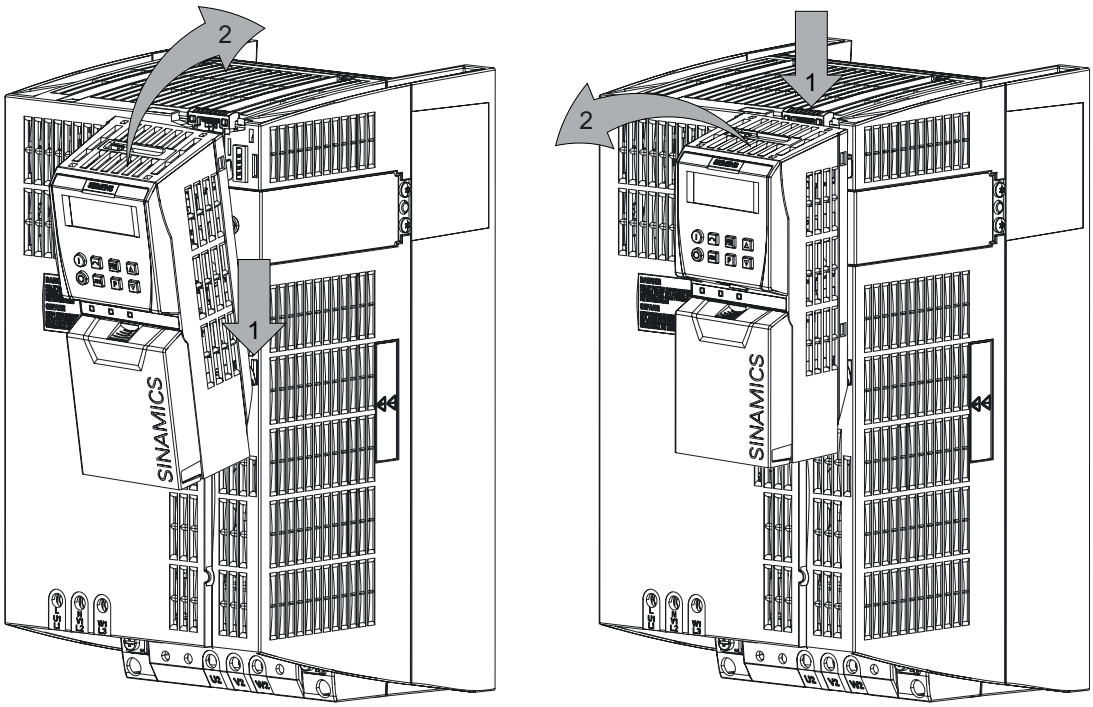

Figure 3-12 Fitting the Control Unit CU240S to the Power Module FSC

Fitting the CU to the Power Module FSGX

The Control Unit is snapped inside the Power Module housing behind the front plate.

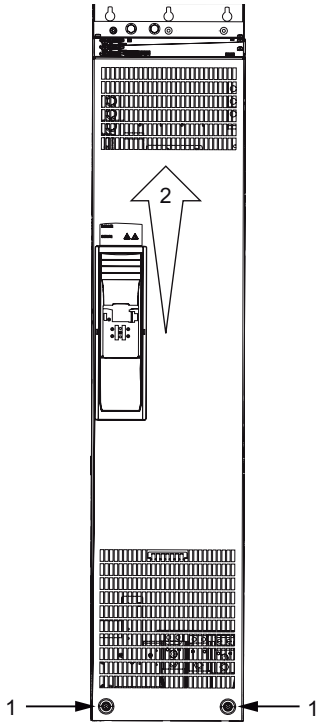

1. Unscrew the two fixing screws at the bottom of the front cover.
2. Push the cover upwards and remove it.

3. and 4. Snap the Control Unit onto the Power Module.

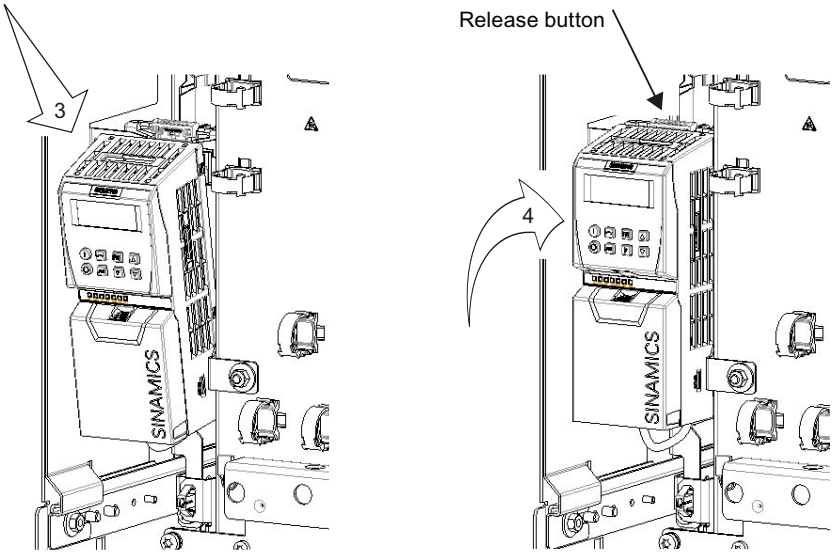

To disconnect the CU push the release button.

Adapting the CU frame of the Power Module front cover

A plastic frame in the front cover of the Power Module ensures the IP20 or IPXXB protection class of the inverter. This plastic frame has to be adapted to the Control Unit:

- The frame can be adapted by removing its bottom
- The plastic insert can be reduced or removed

Control Unit Actions to take	Frame adaptation (view from behind)
CU240S CU240S DP CU240S DP-F CU240S PN CU240S PN-F ① Reduce the insert ② Remove the bottom of the frame IP20 protection is ensured with a correctly adapted frame and with the Control Units listed above.	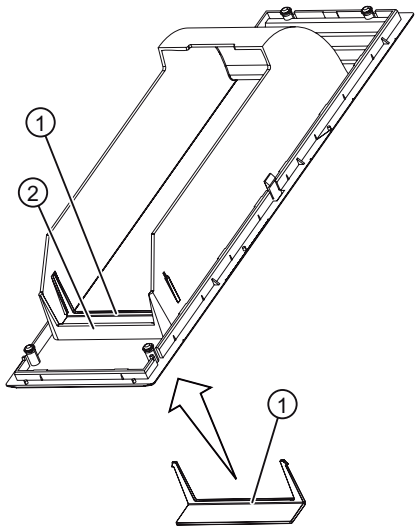
CU240E ① Use the insert as it is ② Remove the bottom of the frame IPXXB protection is ensured with a correctly adapted frame and with the Control Unit CU240E	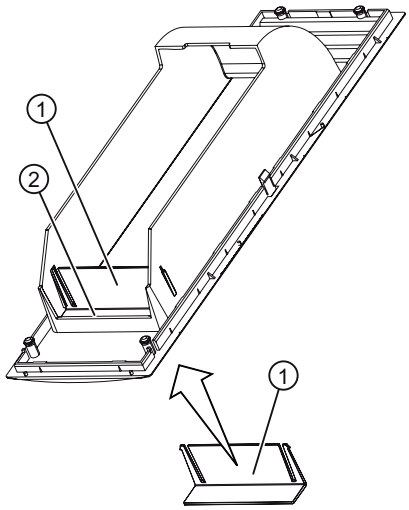

Connecting

4

Electrical Installation

⚠ WARNING
Power and motor connections A fixed location, non varying connection is necessary because of a leakage current > 3.5 mA. The inverter must always be grounded. If it is not grounded correctly, extremely dangerous conditions may arise which could prove potentially fatal. Isolate the mains electrical supply before making or changing connections to the unit. The terminals of the Inverter can carry dangerous voltages even if the inverter is inoperative. Wait at least 5 minutes to allow the unit to discharge after switching off the line supply before carrying out any installation work. When connecting the line supply to the inverter, make sure that the terminal case of the motor is closed. When changing from the ON to OFF-state of an operation if an LED or other similar display is not lit or active; this does not indicate that the unit is switched-off or powered-down. Ensure that the inverter is configured for the correct supply voltage – it must not be connected to a higher voltage supply.

⚠ WARNING
Filtered drives can only be used on power systems with grounded starpoint.

4.1 Power distribution systems

Overview of Power Distribution Systems

The power distribution systems described below, as defined in EN 60950 , have been considered in the design of the inverter. In the next figures three phase systems are outlined. The three phase inverter must be connected to L1, L2 and L3. PE must always be connected. The inverter will operate with most supply systems.

Table 4- 1 Power distribution systems

TN-S Power System	TN-C-S Power System	TN-C Power System	TT Power System	IT Power System
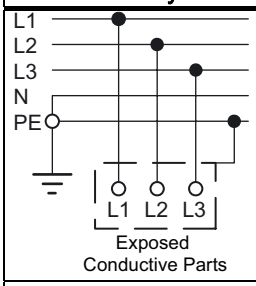	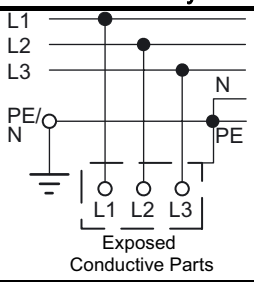	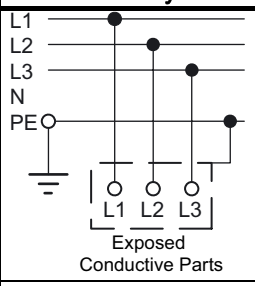	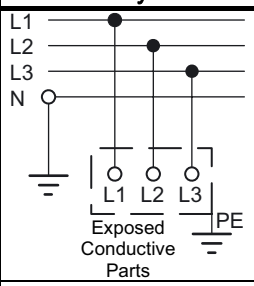	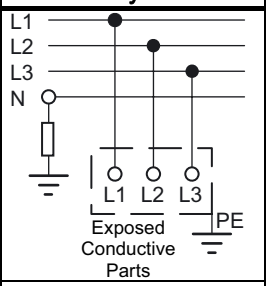
A TN-S power system has separate neutral and protective ground conductors throughout the system.	In a TN-C-S power system, the neutral and protective functions are combined in a single part of the system.	In a TN-C power system, the neutral and protective functions are combined in a single conductor throughout the system.	A TT power system has one point directly grounded, the exposed conductive parts of the installation being connected to a ground, which is electrically independent of the ground of the power system.	An IT power system has no direct connection to ground - instead the exposed parts of the electrical installation are grounded.

⚠ WARNING

Filtered drives can only be used on power systems with grounded starpoint.

Note

For fulfilling the protection class I according to EN 61140 the input and output supply voltages have to be earthed.

4.2 Operation with ungrounded (IT) supplies

Operation with ungrounded (IT) supplies

IT supplies are fully isolated from the protective earth system, usually by an isolating transformer. It should be noted, however, that a protective earth is still provided.

⚠ WARNING
Power Modules with built-in filters or external filters must not be used with IT supplies.

If the Power Module connected to an IT supply is required to remain operational if an input or output phase is connected to ground, then an output reactor must be fitted to prevent overcurrent tripping. The probability of overcurrent tripping without output reactor increases with the size of the IT supply.

⚠ WARNING

Power Module FSGX from an IT power system

If the Power Module FSGX is operated from a non-grounded supply/IT system, the connection bracket for the noise suppression capacitor of the Power Module must be removed.

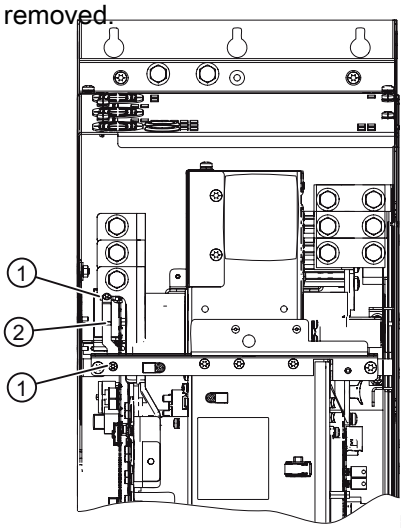

1: Remove the two retaining screws
2: Remove the connection bracket

Failing to remove the connection bracket for the noise suppression capacitor on a non-grounded system/IT system can cause significant damage to the built-in unit.

Operation of the Power Modules without a protective earth is not permitted under any circumstances.

4.3 Operation with Residual Current Devices (RCD)

Operation with Residual Current Devices (RCD)

If an RCD (also referred to as an ELCB or a RCCB) is fitted, the Power Module will operate without nuisance tripping provided that:

- A type B RCD is used.
- The trip limit of the RCD is 300 mA.
- The neutral of the supply is grounded.
- Only one Power Module is supplied from each RCD.
- The output cables are less than 50 m (164 ft) screened or 100 m (328 ft) unscreened.

If no RCD is used, the touch protection can be achieved by double insulation or by separating the Power Module from the mains system using a transformer.

4.4 Motor cable length and cross section

Permissible Cable Length

The use of unshielded motor cables is possible. However to meet C2 EMI class, shielded cables with appropriate EMI installation are required.

Table 4- 2 The inverters will operate at full specification with cable lengths as follows

- Screened 25 m (80 ft) for filtered drives
  50 m (160 ft) for unfiltered drives
- Unscreened 100 m (330 ft) for both filtered and unfiltered drives

Table 4- 3 Using an output reactor or a sine-wave filter as specified in the catalog, the following cable lengths are possible

Frame size	HO power rating	Max. permissable motor cable length using …			
		… an output reactor with …		… a sine-wave filter with …	
		… screened cables	… unscreened cables	… screened cables	… unscreened cables
FSA	0.37 kW ... 1.5 kW	100 m 110 yd.	100 m 110 yd.	200 m 220 yd.	300 m 330 yd.
FSB … FSC	2.2 kW ... 11 kW	100 m 110 yd.	150 m 160 yd.	200 m 220 yd.	300 m 330 yd.
FSD … FSF	15 kW ... 110 kW	200 m 220 yd.	300 m 330 yd.	200 m 220 yd.	300 m 330 yd.
FSGX	132 kW ... 200 kW	300 m 330 yd.	450 m 490 yd.	300 m 330 yd.	450 m 490 yd.

⚠ CAUTION

The control cables must be laid separately from the power cables. The connection must be carried out as shown in the installation section in this manual, to prevent inductive and capacitive interference from affecting the correct function of the system.

Note

Ensure that the appropriate circuit-breakers or fuses with the specified current rating are connected between the power supply and the inverter. The technical specifications contain information about the circuit breaker and fuses. See Technical specifications (Page 65).

Table 4- 4 Cable cross section

Frame size	Cable cross section		Tightening torques	
kW	mm^2	AWG	Nm	lbf in
FSA				
0.37:	1.0 … 2.5	18 … 14	1.1	9.7
0.55:	1.0 … 2.5	18 … 14	1.1	9.7
0.75:	1.0 … 2.5	18 … 14	1.1	9.7
1.1:	1.0 … 2.5	18 … 14	1.1	9.7
1.5:	1.0 … 2.5	18 … 14	1.1	9.7
FSB				
2.2:	1.5 … 6.0	16 … 10	1.5	13
3:	1.5 … 6.0	16 … 10	1.5	13
4:	2.5 … 6.0	14 … 10	1.5	13
FSC				
5.5:	4.0 … 10	12 … 8	2.3	20
7.5:	4.0 … 10	12 … 8	2.3	20
11:	6.0 … 10	10 … 8	2.3	20
FSD				
15:	10 … 35	7 … 2	6	53
18.5:	10 … 35	7 … 2	6	53
22:	16 … 35	5 … 2	6	53
FSE				
30:	25 … 35	3 … 2	6	53
37:	25 … 35	3 … 2	6	53
FSF				
45:	35 … 120	2 … 4/0	13	115
55:	70 … 120	2/0 … 4/0	13	115
75:	95 … 120	3/0 … 4/0	13	115
90:	95 … 120	3/0 … 4/0	13	115
110:	95 … 120	3/0 … 4/0	13	115
FSGX				
132	95 ... 2 x 240	3/0 … 2 x 600	14	120
160	120 ... 2 x 240	4/0 … 2 x 600	14	120
200	185 ... 2 x 240	6/0 … 2 x 600	14	120

⚠ CAUTION
Cable cross section for grounding For power cables up to 10 mm² (Cu) or 16 mm² (Al) the earth cable must be at least as big as the power cables. For power cables larger than 10 mm² (Cu) or 16 mm² (Al) the earth cable must be at least 10 mm² (Cu) or 16 mm² (Al), but need not exceed these sizes.

4.5 Access to power and motor terminals

Accessing the power and motor terminals

Frame sizes A … C have no terminal covers.

Frame sizes D … F terminal covers are accessed by the following steps, as shown in the figure below:

1. Release the latch on each side of the terminal covers with a suitable flat-bladed screwdriver
2. Push the cover upwards
3. Lock the cover into position

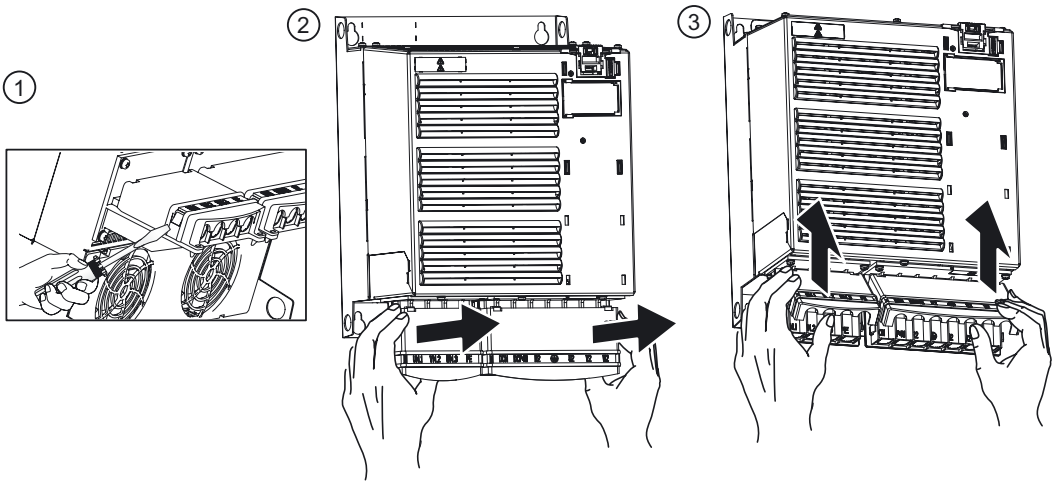

Figure 4-1 Access the power and motor terminals on FSD … FSF

The terminals of FSGX are accessed by removing the front cover:

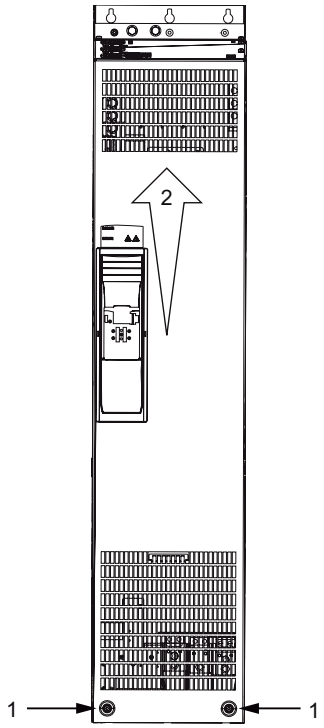

1. Unscrew the two fixing screws at the bottom of the front cover
2. Push the cover upwards and remove it

4.6 Power and motor connections

Power and motor terminal layout

The figures below show the layout of the power and motor terminals of the Power Module. The figure also includes the tightening torques for the terminals.

FSA: 1.1 Nm/9.7 lbf.in

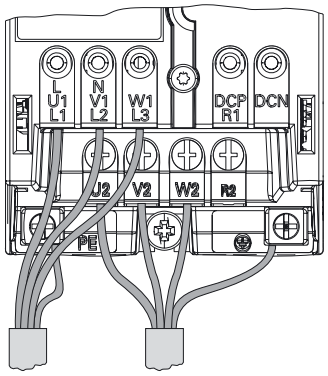

Supply voltage connection
Motor connection

FSB: 1.5 Nm/13.27 lbf.in
FSC: 2.25 Nm/19.91 lbf.in

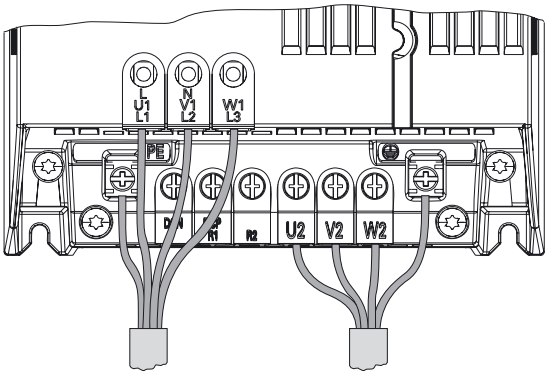

Supply voltage connection
Motor connection

FSD/E: M6: 6 Nm/53 lbf.in
FSF: M8: 13 Nm/115 lbf.in

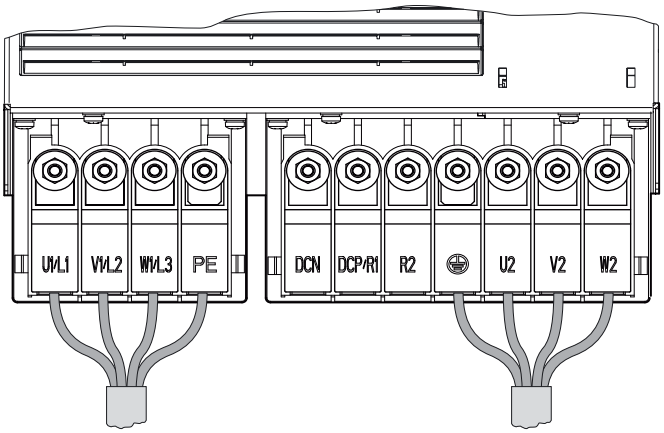

Supply voltage connection
Motor connection

Figure 4-2 Power and motor terminal layout for the FSA ... F

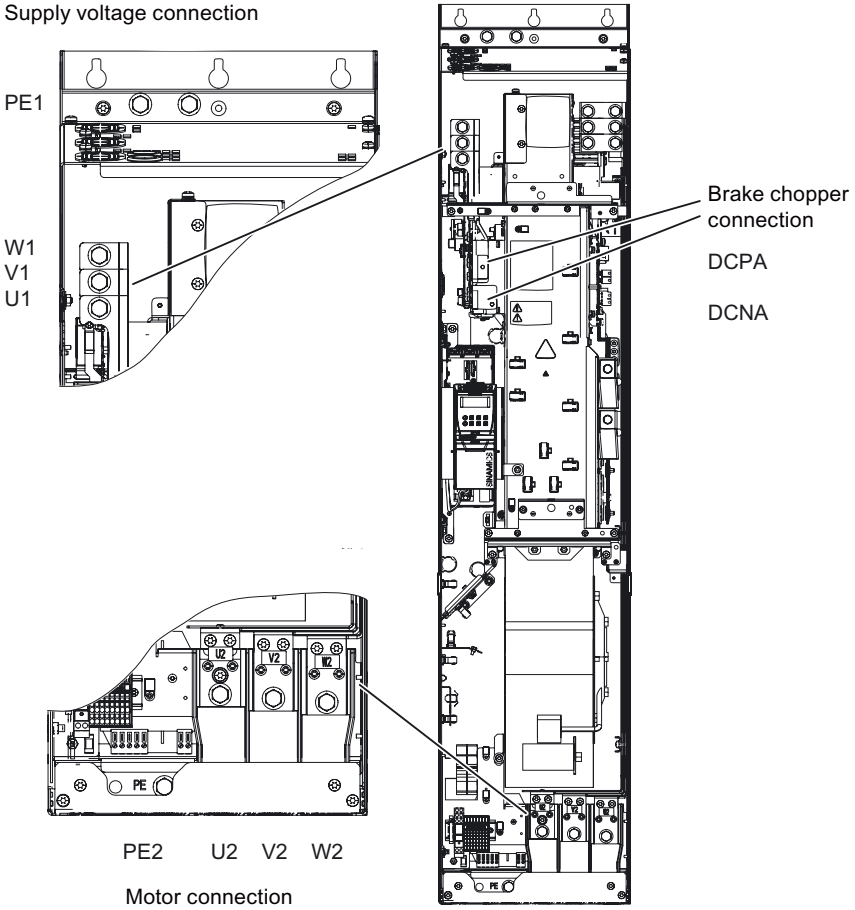

Figure 4-3 Power and motor terminal layout for the FSGX
M10 tightening torque: 25 Nm/18.4 lbf.ft

4.7 DC 24V power supply connection (FSGX)

-X9: Terminal block

The Power Module FSGX requires a separate DC 24V power supply. The power supply is connected to the X9 terminal block of the Power Module.

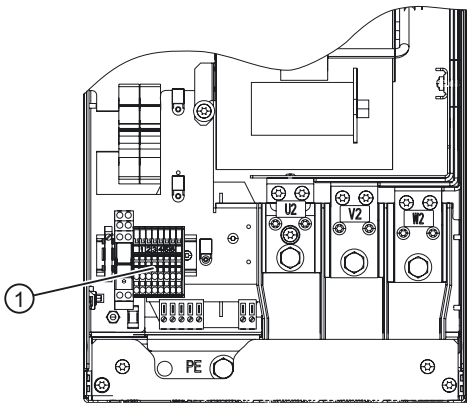

Figure 4-4 -X9 terminal block ① on the Power Module FSGX

Table 4- 5 Terminal block -X9

	Terminal	Function	Technical specifications
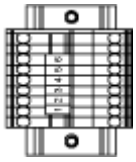	1	P24V	Voltage: 24 V DC (20.4 V - 28.8 V) Current consumption: max. 4 A
	2	M	
	3	Reserved, do not use	
	4	Reserved, do not use	
	5	HS1	Line contactor control
	6	HS2	Line contactor control

Max. connectable cross-section: 1.5 mm²

Connection

Connect the external DC 24 V supply to terminals 1 (P 24 V) and 2 (Mext) of terminal block -X9 on the Power Module.

NOTICE
Not connected 24V power supply lead to a fault message of the inverter as soon as the 400V power supply is disconnected from the Power Module.

4.8 Adjusting the fan voltage (FSGX)

Fine-tuning the supply voltage of the fan

The power supply for the device fan (1 AC 230 V) in the Power Module is generated from the line supply using a transformer.

The transformer is fitted with primary taps so that it can be fine-tuned to the supply voltage. When delivered, the taps are always set to the highest level. With a low supply voltage, the appropriate transformer tap must be activated.

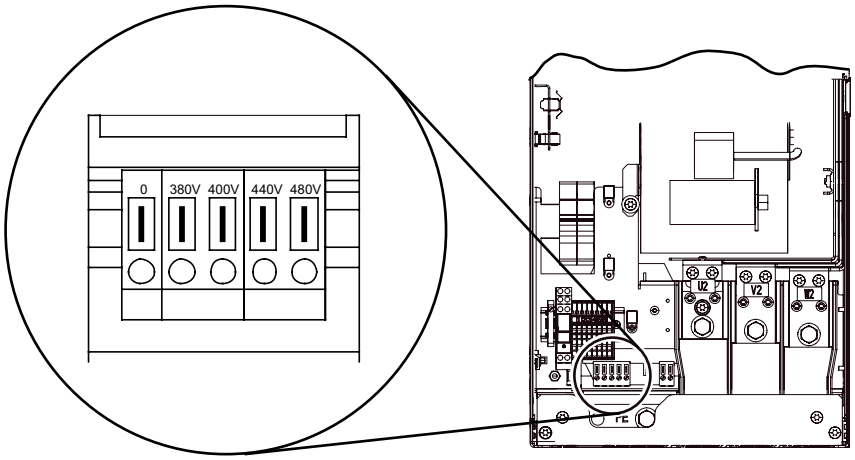

Figure 4-5 Setting terminals for the fan transformer PM240 FSGX

The setting terminals must be connected to "0" and the supply voltage.

The supply voltage assignments for making the appropriate setting on the fan transformer are indicated in the following tables.

Table 4- 6 Supply voltage assignments for setting the fan transformer

Supply voltage	Fan transformer tap
380 V ± 10%	380 V
400 V ± 10%	400 V
440 V ± 10%	440 V
480 V ± 10%	480 V

NOTICE

If the terminals are not reconnected to the actual supply voltage:

- The required cooling capacity cannot be provided because the fan rotates too slowly;
- The fan fuses may blow due to an overcurrent.

4.9 Line contactor control (FSGX)

-X9: Terminal block

The Power Module FSGX can control its line contactor. The control terminals for the line contactor are on the terminal block -X9.

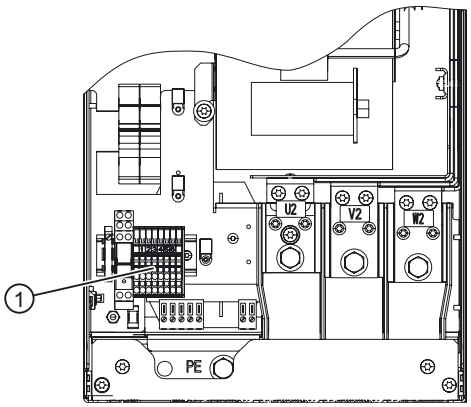

Figure 4-6 -X9 terminal block ① on the Power Module FSGX

Table 4- 7 Terminal block -X9

	Terminal	Function	Technical specifications
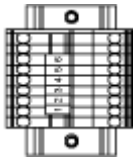	1	P24V	Voltage: 24 V DC (20.4 V - 28.8 V) Current consumption: max. 4 A
	2	M	
	3	Reserved, do not use	
	4		
	5	HS1	Line contactor control 230 V AC ± 15 %, 400 mA
	6	HS2	

Max. connectable cross-section: 1.5 mm²

Connection

Connect the line contactor to terminals 5 and 6 of terminal block –X9 on the Power Module.

Note

The connection of a line contactor to the terminal -X9 is not mandatory. The line contactor can be controlled externally as well.

Control and monitoring of the line contactor

The Power Module closes its line contactor before the motor is switched on. The line contactor is opened after the motor is switched off. The Power Module monitors the line voltage after a tolerance time if the motor is switched on.

4.10 ESD guidelines

Avoiding Electromagnetic Interference (EMI)

The inverters are designed to operate in an industrial environment where a high level of EMI can be expected. Most installations do not give problems. However, it is good engineering practice to conform to the following guidelines - this will reduce the likelyhood of problems during operation.

Actions to take

- Ensure that all equipment in the cubicle is well grounded using short, thick grounding cable connected to a common star point or busbar.
- Make sure that any control equipment (such as a PLC) connected to the inverter is connected to the same ground or star point as the inverter using a short thick link.
- Connect the return ground from the motors directly to the ground connection (PE) on the associated inverter.
- Flat conductors are preferred as they have lower impedance at higher frequencies.
- Terminate the ends of the cable neatly, ensuring that unscreened wires are as short as possible.
- Separate the control cables from the power cables as much as possible, using separate trunking, if the cables cross they should cross at 90º to each other.
- Whenever possible, use screened leads for the connections to the control circuitry.
- Ensure that the contactors in the cubicle are suppressed, either with R-C suppressors for AC contactors or 'flywheel' diodes for DC contactors fitted to the coils. Varistor suppressors are also effective. This is important when the contactors are controlled from the inverter relay.
- Use screened or armored cables for the motor connections and ground the screen at both ends using the cable clamps.

⚠ WARNING
Safety regulations must not be compromised when installing inverters!

Screening methods

For all frame sizes the Screen Termination Kit is supplied as an optional extra. It allows easy and efficient connection of the necessary screening. For further details on the Screen Termination Kit, please refer to the SINAMICS G120 catalog.

Screening without a Screen Termination Kit

In order to meet radiated emissions a screen termination kit must be used. Screening without a screen termination kit is only suitable for installation in a metal cabinet.

Should a Screen Termination Kit not be available, the inverter then can be screened using the methodology shown in the figure below. This diagram shows both methodologies of screening.

Note

The EMI illustration below is not to scale. The terminal cover on Frame Size D cannot be removed. It has been removed to show the correct cable connection for the terminals.

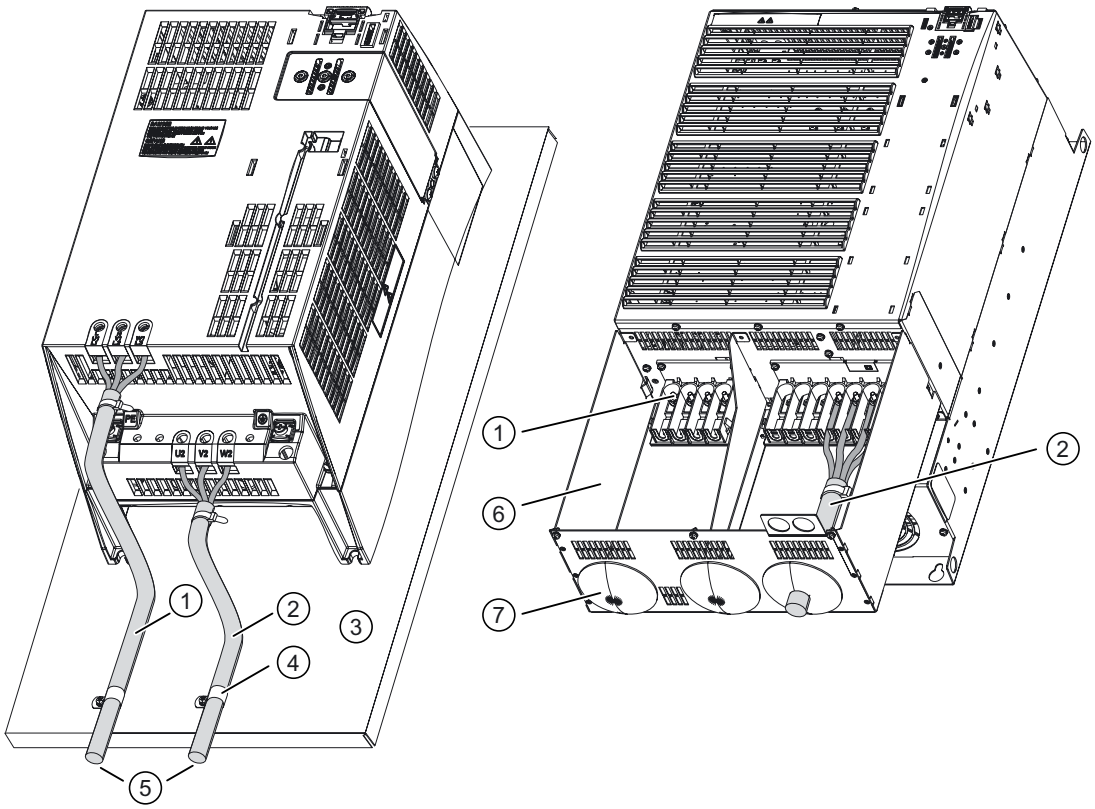

① Line power input
② Motor cable
③ Metal back plate
④ Use suitable clips to fix motor and power cable screen securely to metal back plate
⑤ Screen cables
⑥ Screen Termination Kit
⑦ Gromments

Figure 4-7 Example of wiring to minimize the effect of EMI

Service and maintenance 5

5.1 Maintenance

The purpose of maintenance is to preserve the specified condition of the Power Module. Dirt and contamination must be removed regularly and parts subject to wear replaced. The Power Module comprises mostly electronic components. Apart from the fan(s), the unit, therefore, contains hardly any components that are subject to wear or that require maintenance or servicing.

The following points must generally be observed.

Dust deposits

Dust deposits inside the Power Module must be removed at regular intervals by qualified personnel in line with the relevant safety regulations. The unit must be cleaned using a brush and vacuum cleaner, and dry compressed air (max. 1 bar) for areas that cannot be easily reached.

Ventilation

When installing the devices in a cabinet, make sure that the cabinet ventilation slots are not obstructed. The fan must be checked to make sure that it is functioning correctly.

Cable and screw terminals

Cable and screw terminals must be checked regularly to ensure that they are secure in position, and if necessary, retightened. Cabling must be checked for defects. Defective parts must be replaced immediately.

Note

The actual intervals at which maintenance procedures are to be performed depend on the installation conditions and the operating conditions.

Siemens offers its customers support in the form of a service contract. For further details, contact your regional office or sales office.

5.2 Replacing components

Power Module spare parts

Spare part	available (✓) or not available (-) for Power Module ...						
	FSA 0.37 kW ... 1.5 kW	FSB 2.2 kW ... 4 kW	FSC 5.5 kW ... 11 kW	FSD 15 kW ... 22 kW	FSE 30 kW ... 37 kW	FSF 45 kW ... 110 kW	FSGX 132 kW ... 200 kW
Fan	✓	✓	✓	✓	✓	✓	✓
Fan transformer	-	-	-	-	-	-	✓
Fan fuses	-	-	-	-	-	-	✓
Fan relay	-	-	-	-	-	-	✓
CIM (Control Interface Module)	-	-	-	-	-	-	✓
Power block	-	-	-	-	-	-	✓
Front cover	-	-	-	-	-	-	✓

5.2.1 Replacing the cooling fan

The service life of the cooling fan

The average service life of the cooling fans is 50,000 hours. In practice, however, the service life may deviate from this value. Especially a dusty environment can occlude the fan.

The fan must be replaced in good time to ensure that the inverter is available.

Replacing the cooling fan FSA … FSC

Preparatory steps

- Power-down the inverter
- Remove the Control Unit from the inverter
- Disconnect all the cables from the Power Module
- Place the Power Module face-down on a clean and safe surface

Removal

1. Using a posi-drive screwdriver, remove the fan retaining screws
2. Release the fan cable connector(s)
3. Slide the cooling fan out from the inverter

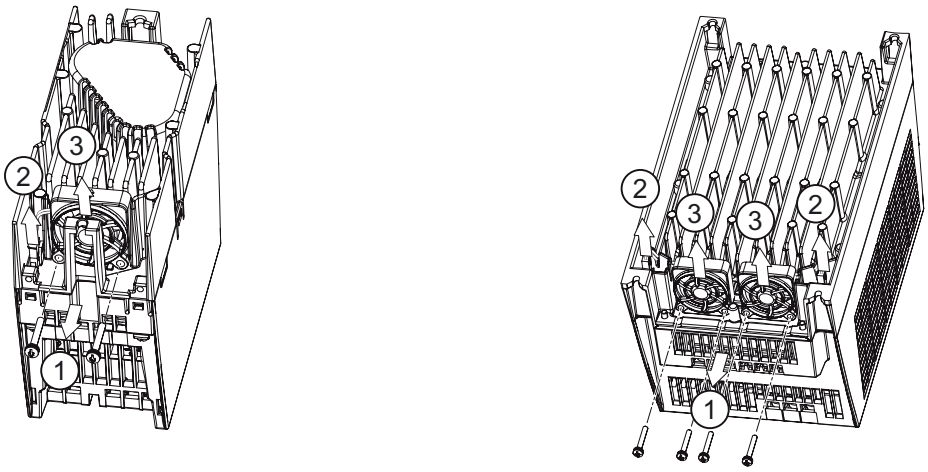

Figure 5-1 Cooling fan removal FSA (0.37 kW … 1.5 kW), FSB and FSC (2.2 kW … 11 kW)

Installation

For re-installation, carry out the above steps in reverse order.

Cooling fan replacement for FSD … FSF

Preparatory steps

- Power-down the inverter
- Remove the Control Unit from the inverter
- Disconnect all the cables from the Power Module
- Place the Power Module face-down on a clean and safe surface

Removal

1. Remove the fan retaining board
2. Release the fan cable connectors
3. Remove the cooling fan out from the inverter

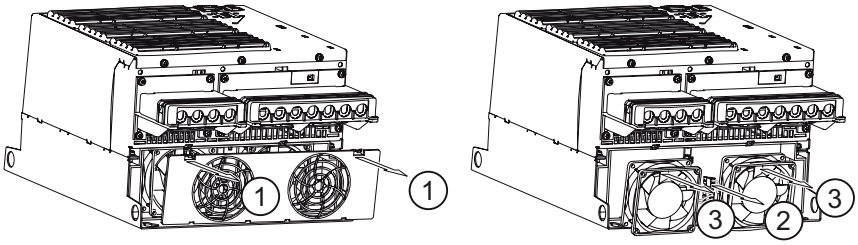

Figure 5-2 Cooling fan removal FSD and FSE (15 kW … 37 kW)

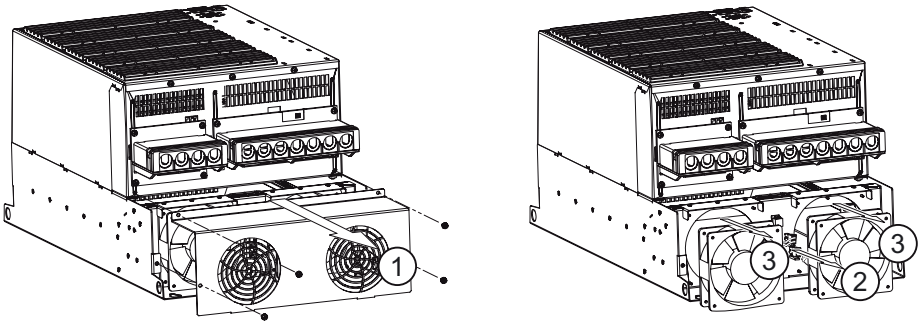

Figure 5-3 Cooling fan removal FSF (45 kW … 110 kW)

Installation

For re-installation, carry out the above steps in reverse order.

Replacing the cooling fan FSGX

Preparatory steps

- Disconnect the chassis unit from the power supply.
- Allow unimpeded access.
- Remove the protective cover.

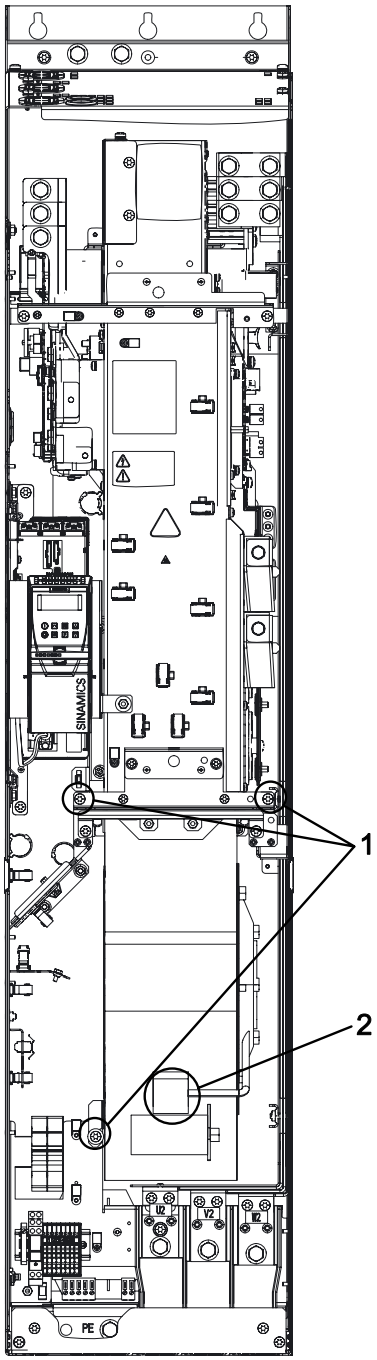

Figure 5-4 Fan replacement, Power Module FSGX

Removal

The steps for the removal procedure are numbered in accordance with the diagram.

1. Remove the retaining screws for the fan (3 screws).
2. Disconnect the supply cables (1 x "L", 1 x "N").

You can now carefully remove the fan.

CAUTION
When removing the fan, ensure that you do not damage any signal cables.

Installation

For re-installation, carry out the above steps in reverse order.

CAUTION
Carefully re-establish the plug connections and ensure that they are secure. The screwed connections for the protective covers must only be tightened by hand.

5.2.2 Replacing the cooling fan fuses and the cooling fan relay (FSGX)

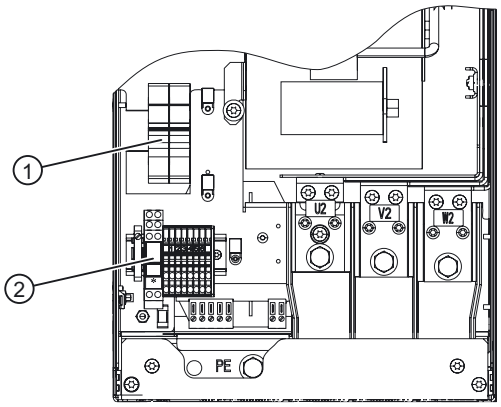

Figure 5-5 Position of the cooling fan fuses ①and the fan relay ②

The cooling fan fuses and the cooling fan relay can be accessed after removing the front cover of the Power Module FSGX.

5.2.3 Power block replacement (FSGX)

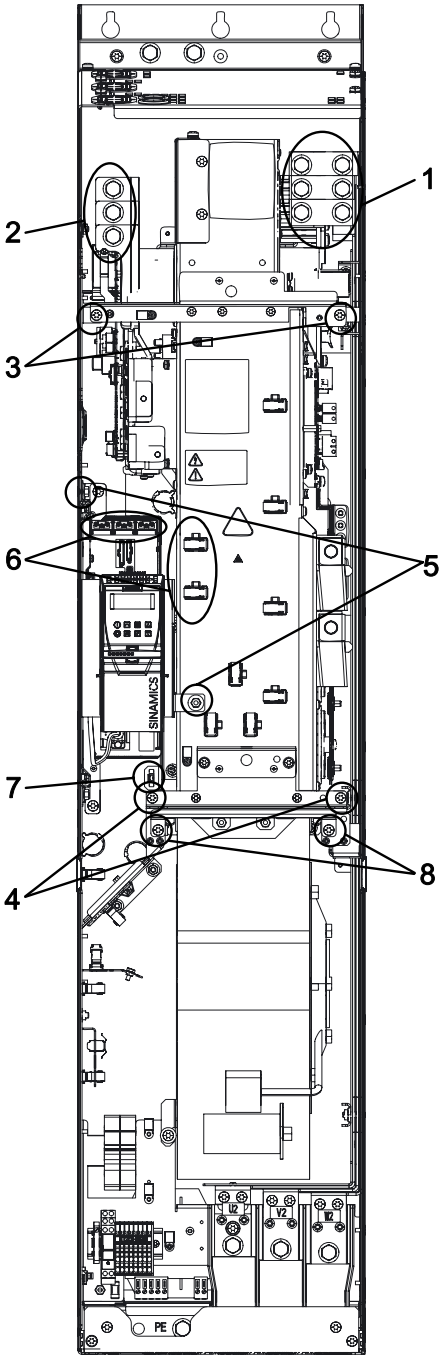

Figure 5-6 Power block replacement, PM240 FSGX

Preparatory steps

- Disconnect the built-in unit from the power supply.
- Allow unimpeded access to the power block.
- Remove the protective cover.

Removal

The steps for the removal procedure are numbered in accordance with the diagram.

1. Unscrew the connection to the outgoing motor section (3 screws on the right side).
   Loose the 3 screws on the left side and turn the connection straps up.
2. Unscrew the connection to the line supply (3 screws).
3. Remove the retaining screws at the top (2 screws).
4. Remove the retaining screws at the bottom (2 screws).
5. Remove the Control Unit. If necessary, remove the communication plugs and terminal wiring.
6. Disconnect the connectors for the fiber optic cables (3 plugs) and release the cable connection for the signal cables (2 connectors).
   Remove the IPD module by loosening two curled screws. The IPD module remains connected to the current sensor cables.
7. Disconnect the plug for the thermocouple.
8. Unscrew the two retaining screws for the fan and attach the tool for de-installing the power block at this position.

You can now remove the power block.

CAUTION
When removing the power block, ensure that you do not damage any signal cables.

Installation steps

For installation, carry out the above steps in reverse order.

CAUTION
The connectors of the fiber-optic cables have to be mounted on their original plug-in position. The fiber-optic cables and the plug sockets are labelled accordingly (U11, U21, U31). Carefully establish the plug connections and ensure that they are secure. The screwed union connections for the protective covers must only be tightened by hand.

Crane lifting lugs for secure transportation of the power block

The power blocks are fitted with crane lifting lugs for transportation on a lifting harness in the context of replacement.

The positions of the crane lifting lugs are illustrated by arrows in the figures below.

⚠ WARNING
A lifting harness with vertical ropes or chains must be used to prevent any risk of damage to the housing.

CAUTION
The power block busbars must not be used to support or secure lifting harnesses for the purpose of transportation.

The positions of the crane lifting lugs are illustrated by arrows in the figures below.

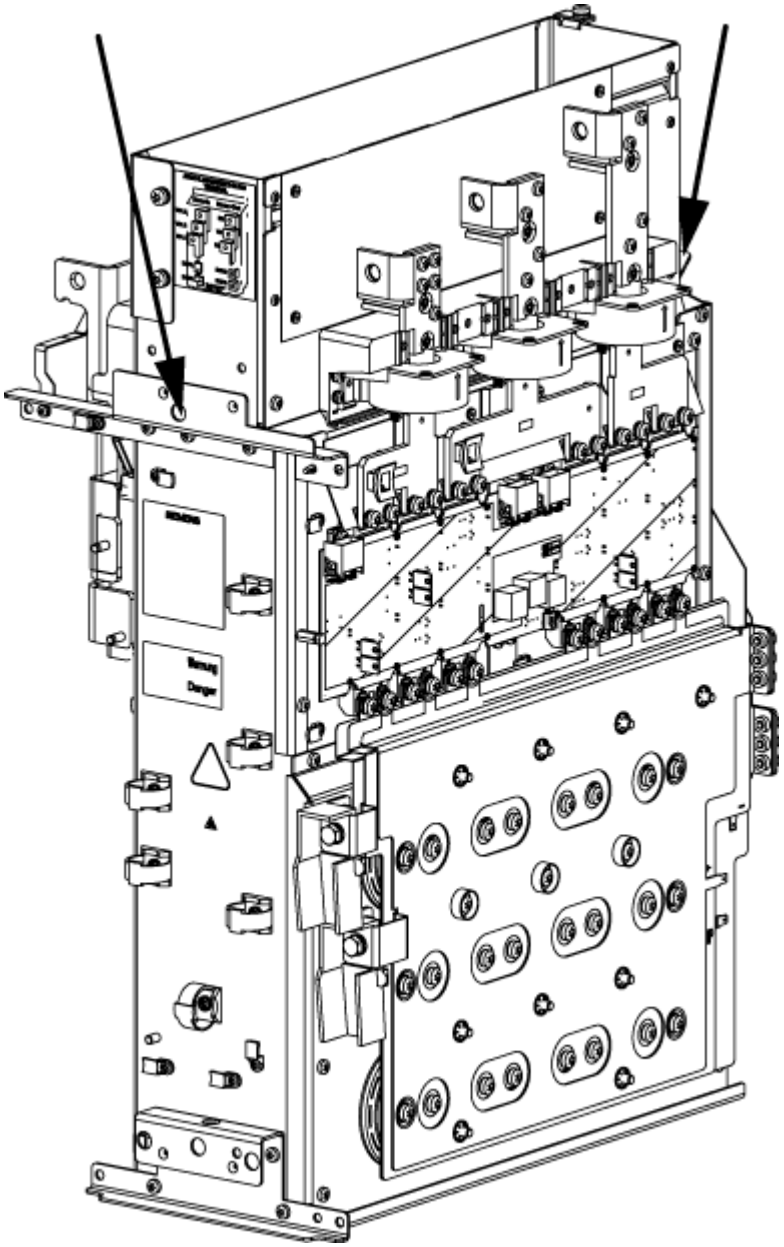

Figure 5-7 Crane lifting lugs of the Power Block FSGX

5.2.4 Control Interface Module replacement (FSGX)

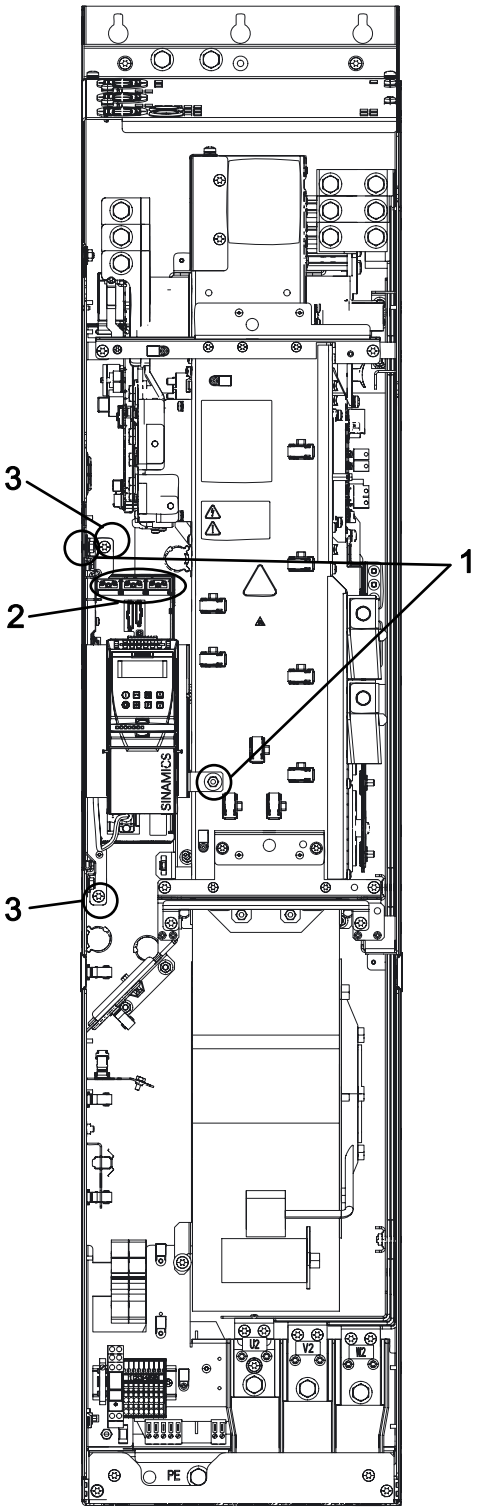

Figure 5-8 Control Interface Module replacement, Power Module PM240 FSGX

Preparatory steps

- Disconnect the Power Module from the power supply.
- Allow unimpeded access.
- Remove the front cover.
- Remove the Control Unit. If necessary, remove the communication plugs and terminal wiring.

Removal

The steps for the removal procedure are numbered in accordance with the diagram.

1. Remove the two retaining screws for the Control Unit bracket.
2. Disconnect the cable from the Control Unit bracket to the CIM.
   Remove the cables to the Brake Relay or Safe Brake Relay, if it is installed.
   Remove carefully the Control Unit bracket.
   Disconnect the connectors for the fiber optic cables (3 plugs) and release the cable connection for the signal cables (2 connectors).
   Remove the IPD module by loosening two curled screws. The IPD module remains connected to the current sensor cables.
3. Remove the two retaining screws for the slide-in electronics unit.
   When removing the slide-in electronics unit, you have to disconnect 5 further plugs one after the other (2 at the top, 3 at the bottom).

CAUTION
When removing the electronics unit, ensure that you do not damage any signal cables.

The Control Interface Board can then be removed from the slide-in electronics unit.

CAUTION
When removing the connector of the ribbon cable, make sure that you actuate the locking lever on the connector very carefully (e.g. with a screwdriver) otherwise the lock could be damaged.

Installation

For re-installation, carry out the above steps in reverse order.

CAUTION
The connectors of the fiber-optic cables have to be mounted on their original plug-in position. The fiber-optic cables and the plug sockets are labelled accordingly (U11, U21, U31). Carefully re-establish the plug connections and ensure that they are secure. When dealing with connectors with a lock, make sure that the locking lever is securely engaged once connected. The screwed connections for the protective covers must only be tightened by hand.

Technical specifications

6

Common performance ratings of the Power Module

Table 6- 1 Performance ratings

Feature	Specification
Line operating voltage	3 AC 380 V … 480 V ± 10% The permissible voltage depends on the operational altitude
Input frequency	47 Hz … 63 Hz
Power factor λ	0.7 ... 0.85
Overload capability for base load (HO) 0.37 kW ... 75 kW	1.5 x Base-load output current (150% overload) for 57 s every 300 s
	2 x Base-load output current (200% overload) for 3 s every 300 s
Overload capability for base load (HO) 90 kW ... 200 kW	1.36 x Base-load output current (136% overload) for 57 s every 300 s
	1.6 x Base-load output current (160% overload) for 3 s every 300 s
Overload capability for base load (LO) 7.5 kW ... 90 kW	1.1 x Base-load output current (110% overload) for 57 s every 300 s
	1.5 x Base-load output current (150% overload) for 3 s every 300 s
Overload capability for base load (LO) 110 kW ... 250 kW	1.1 x Base-load output current (136% overload) for 59 s every 300 s
	1.5 x Base-load output current (150% overload) for 1 s every 300 s
Inrush current	Less than rated input current
Pulse frequency	4 kHz standard for 0.37 kW ... 75 kW (HO) 2 kHz standard for 90 kW ... 200 kW (HO) The pulse frequency can be changed manually in 2 kHz steps. Increasing the pulse frequencies above standard leads to an output current reduction.
Electromagnetic compatibility	Optional Class A filters available according to EN 55011
Braking	DC braking, Compound braking, Dynamic braking with integrated chopper
Protection level	IP20 or IPXXB IPXXB protection is ensured with the Power Module FSGX (HO 132 kW … 200 kW) in conjunction with the Control Units CU240E and CU230P-2.
Temperature range without derating (HO)	0.37 kW ... 110 kW 0 °C … +50 °C (14 °F … 122 °F)
	132 kW ... 200 kW 0 °C … +40 °C (32 °F … 104 °F)
Temperature range without derating (LO)	0.37 kW ... 132 kW 0 °C … +40 °C (14 °F … 104 °F)

Feature	Specification
	160 kW ... 250 kW 0 °C … +40 °C (32 °F … 104 °F)
Temperature range with derating	Operational temperature up to 60° C (140° F) is possible with power derating
Storage temperature	-40 °C … +70 °C (-40 °F … 158 °F)
Humidity	< 95% RH - non-condensing In areas of high relative humidity, measures should be taken to ensure that condensation does not form within or around the SINAMICS G120. Anti-condensation heaters are commonly used to prevent the formation of condensation.
Pollution	According pollution degree level 2 Do not install the SINAMICS G120 in an environment which contains atmospheric pollutants such as dust and/or corrosive gases.
Shock and vibration	Do not drop the SINAMICS G120 or expose to sudden shock. Do not install the SINAMICS G120 in an area where it is likely to be exposed to constant vibration.
Electromagnetic radiation	Do not install the SINAMICS G120 near sources of electromagnetic radiation.
Operational altitude without derating	0.37 kW ... 110 kW (HO) Up to 1000 m (3300 ft) above sea level
	132 kW ... 200 kW (HO) Up to 2000 m (6500 ft) above sea level
Operational altitude with derating	Higher operational altitude is possible with power derating

Relationship between pulse frequency and output base-load current reduction

Table 6- 2 Current reduction depending on pulse frequency

LO base load	Output base-load current at pulse frequency of							
	2 kHz	4 kHz	6 kHz	8 kHz	10 kHz	12 kHz	14 kHz	16 kHz
kW	A	A	A	A	A	A	A	A
0.37	--	1.30	1.11	0.91	0.78	0.65	0.59	0.52
0.55	--	1.70	1.45	1.19	1.02	0.85	0.77	0.68
0.75	--	2.20	1.87	1.54	1.32	1.10	0.99	0.88
1.1	--	3.10	2.64	2.17	1.86	1.55	1.40	1.24
1.5	--	4.10	3.49	2.87	2.46	2.05	1.85	1.64
2.2	--	5.90	5.02	4.13	3.54	2.95	2.66	2.36
3.0	--	7.70	6.55	5.39	4.62	3.85	3.47	3.08
4.0	--	10.20	8.67	7.14	6.12	5.10	4.59	4.08
7.5	--	18.00	16.20	13.30	11.40	9.50	8.60	7.60
11.0	--	25.00	22.10	18.20	15.60	13.00	11.70	10.40
15.0	--	32.00	27.20	22.40	19.20	16.00	14.40	12.80
18.5	--	38.00	32.30	26.60	22.80	19.00	17.10	15.20
22	--	45.00	38.25	31.50	27.00	22.50	20.25	18.00
30	--	60.00	52.70	43.40	37.20	31.00	27.90	24.80
37	--	75.00	63.75	52.50	45.00	37.50	33.75	30.00
45	--	90.00	76.50	63.00	54.00	45.00	40.50	36.00
55	--	110.0	93.50	77.00	--	--	--	--
75	--	145.0	123.3	101.5	--	--	--	--
90	--	178.0	151.3	124.6	--	--	--	--
110	205.0	178.0	--	--	--	--	--	--
132	250.0	205.0	--	--	--	--	--	--
160	302.0	250.0	--	--	--	--	--	--
200	370.0	302.0	--	--	--	--	--	--
250	477.0	370.0	--	--	--	--	--	--

Operating temperature derating

The operating temperature range is shown diagramatically in the figures below:

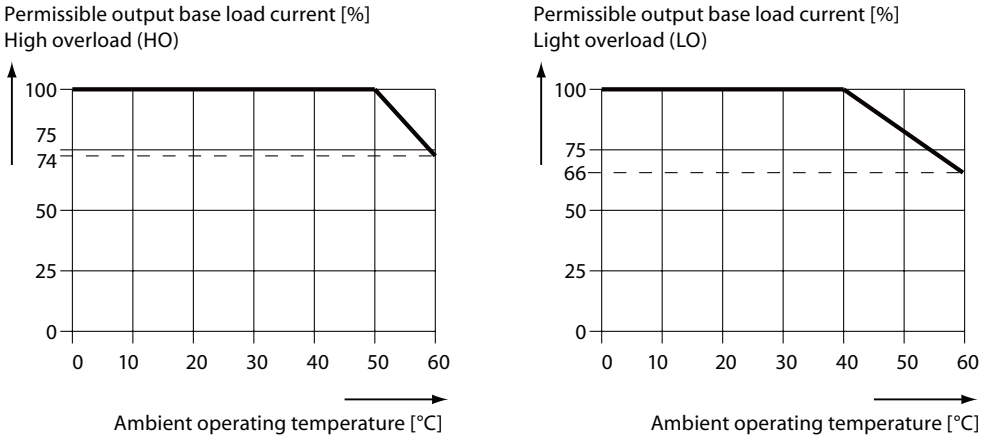

Figure 6-1 Current derating for temperature, FSA … FSF

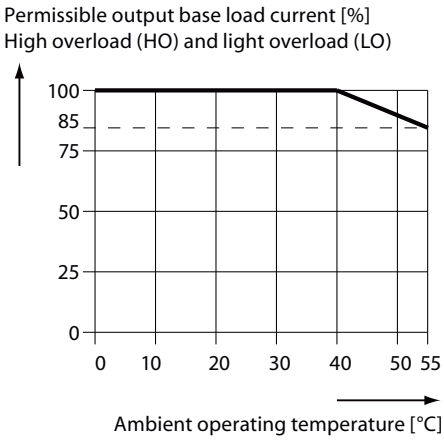

Figure 6-2 Current derating for temperature, FSGX

Operational altitude derating

The figures below show the derating required according to altitude.

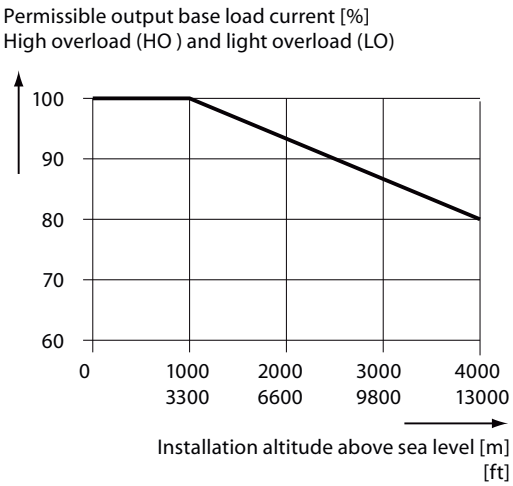

Current derating for altitude, FSA … FSF

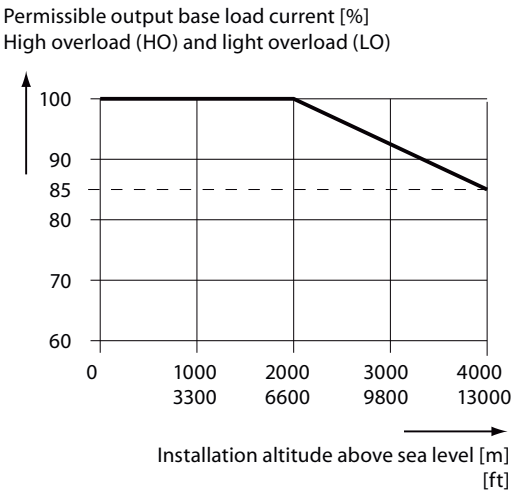

Current derating for altitude, FSGX

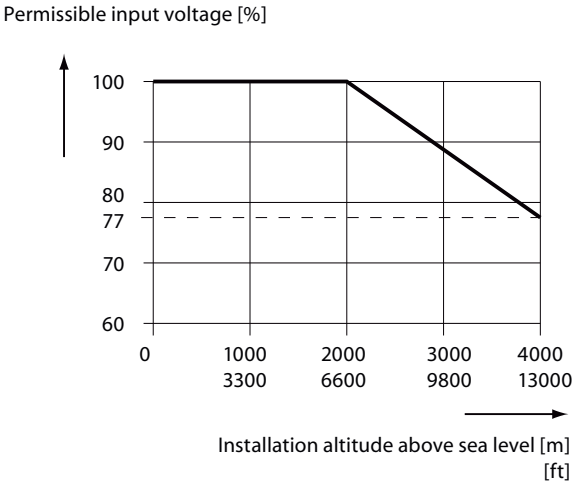

Voltage derating for altitude, FSA … FSGX

Power Module specifications

⚠ CAUTION

High Overload (HO) and Light Overload (LO) input currents

The input current at the rated operating point - applies for the short-circuit voltage of the line supply V_k = 1% referred to the rated Power Module power and a rated line supply voltage of 400 V without a line reactor. If a line reactor is used, the specified values are reduced.

NOTICE

UL certified Fuses must be used

In order that the system is in compliance with UL, UL certified fuses, circuit-breaker or self protected combination motor controller must be used.

Table 6- 3 Frame Sizes A, 3 AC 380 V … 480 V, ± 10%

Order No. unfiltered	6SL3224-	0BE13-7UA0	0BE15-5UA0	0BE17-5UA0
Rated power based on HO-loading	kW	0.37	0.55	0.75
	hp	0.5	0.75	1
Power loss	kW	0.097	0.099	0.102
Rated input current (HO)	A	1.6	2.0	2.5
Rated output current (HO)	A	1.3	1.7	2.2
Rated input current (LO)	A	1.7	2.1	2.6
Rated output current (LO)	A	1.3	1.7	2.2
Fuse	A	10	10	10
Required cooling air flow	l/s	4.8	4.8	4.8
	CFM	10	10	10
Input cable / Output cable	mm^2	1.0 … 2.5	1.0 … 2.5	1.0 … 2.5
	AWG	18 … 14	18 … 14	18 … 14
Weight	kg	1.2	1.2	1.2
	lb	2.6	2.6	2.6

Table 6- 4 Frame Sizes A, 3 AC 380 V … 480 V, ± 10%

Order No. unfiltered	6SL3224-	0BE21-1UA0	0BE21-5UA0
Rated power based on HO-loading	kW	1.1	1.5
	hp	1.5	2
Power loss	kW	0.108	0.114
Rated input current (HO)	A	3.8	4.8
Rated output current (HO)	A	3.1	4.1
Rated input current (LO)	A	3.9	4.9
Rated output current (LO)	A	3.1	4.1
Fuse	A	10	10
Required cooling air flow	l/s	4.8	4.8
	CFM	10	10
Input cable / Output cable	mm^2	1.0 … 2.5	1.0 … 2.5
	AWG	18 … 14	18 … 14
Weight	kg	1.2	1.2
	lb	2.6	2.6

Table 6- 5 Frame Sizes B, 3 AC 380 V … 480 V, ± 10%

Order No. filtered	6SL3224-	0BE22-2AA0	0BE23-0AA0	0BE24-0AA0
unfiltered		0BE22-2UA0	0BE23-0UA0	0BE24-0UA0
Rated power based on HO-loading	kW	2.2	3	4
	hp	3	4	5
Power loss	kW	0.139	0.158	0.183
Rated input current (HO)	A	7.6	10.2	13.4
Rated output current (HO)	A	5.9	7.7	10.2
Rated input current (LO)	A	7.6	10.2	13.4
Rated output current (LO)	A	5.9	7.7	10.2
Fuse	A	16	16	20
Required cooling air flow	l/s	24	24	24
	CFM	50	50	50
Input cable / Output cable	mm^2	1.5 … 6.0	1.5 … 6.0	1.5 … 6.0
	AWG	16 … 10	16 … 10	16 … 10
Weight	kg	4.3	4.3	4.3
	lb	9.5	9.5	9.5

Table 6- 6 Frame Sizes C, 3 AC 380 V … 480 V, ± 10%

Order No.	filtered	6SL3224-	0BE25-5AA0	0BE27-5AA0	0BE31-1AA0
	unfiltered		0BE25-5UA0	0BE27-5UA0	0BE31-1UA0
Rated power based on HO-loading		kW	5.5	7.5	11
		hp	7.5	10	15
Power loss		kW	0.240	0.297	0.396
Rated input current (HO)		A	16.7	23.7	32.7
Rated output current (HO)		A	13.2	19	26
Rated input current (LO)		A	21.9	31.5	39.4
Rated output current (LO)		A	18	25	32
Fuse		A	20	32	35
Required cooling air flow		l/s	55	55	55
		CFM	120	120	120
Input cable / Output cable		mm^2	4.0 … 10	4.0 … 10	4.0 … 10
		AWG	12 … 8	12 … 8	12 … 8
Weight	filtered/ unfiltered	kg	6.5	6.5	6.5
		lb	14.3	14.3	14.3

Table 6- 7 Frame Sizes D, 3 AC 380 V … 480 V, ± 10%

Order No.	filtered	6SL3224-	0BE31-5AA0	0BE31-8AA0	0BE32-2AA0
	unfiltered		0BE31-5UA0	0BE31-8UA0	0BE32-2UA0
Rated power based on HO-loading		kW	15	18.5	22
		hp	20	25	30
Power loss	filtered	kW	0.44	0.55	0.72
	unfiltered	kW	0.42	0.52	0.69
Rated input current (HO)		A	40	46	56
Rated output current (HO)		A	32	38	45
Rated input current (LO)		A	46	53	72
Rated output current (LO)		A	38	45	60
Fuse		A	50	63	80
Required cooling air flow		l/s	55	55	55
		CFM	120	120	120
Input cable / Output cable		mm^2	10 … 35.0	10 … 35.0	10 … 35.0
		AWG	7 … 2	7 … 2	7 … 2
Weight	filtered	kg	16	16	16
		lb	35.3	35.3	35.3
	unfiltered	kg	13	13	13
		lb	28.7	28.7	28.7

Table 6- 8 Frame Sizes E, 3 AC 380 V … 480 V, ± 10%

Order No.	filtered	6SL3224-	0BE33-0AA0	0BE33-7AA0
	unfiltered		0BE33-0UA0	0BE33-7UA0
Rated power based on HO-loading		kW	30	37
		hp	40	50
Power loss	filtered	kW	1.04	1.2
	unfiltered	kW	0.99	1.2
Rated input current (HO)			73	90
Rated output current (HO)			60	75
Rated input current (LO)			88	105
Rated output current (LO)			75	90
Fuse			100	125
Required cooling air flow			110	110
			240	240
Input cable / Output cable			25.0 … 35.0	25.0 … 35.0
		AWG	3 … 2	3 … 2
Weight	filtered	kg	23	23
		lb	50.7	50.7
	unfiltered	kg	16	16
		lb	35.3	35.3

Table 6- 9 Frame Sizes F, 3 AC 380 V … 480 V, ± 10%

Order No.	filtered	6SL3224-	0BE34-5AA0	0BE35-5AA0	0BE37-5AA0
	unfiltered		0BE34-5UA0	0BE35-5UA0	0BE37-5UA0
Rated power based on HO-loading		kW	45	55	75
		hp	60	75	100
Power loss	filtered	kW	1.5	2.0	2.4
	unfiltered	kW	1.4	1.9	2.3
Rated input current (HO)			108	132	169
Rated output current (HO)			90	110	145
Rated input current (LO)			129	168	204
Rated output current (LO)			110	145	178
Fuse			160	200	250
Required cooling air flow			150	150	150
			320	320	320
Input cable / Output cable			35.0 … 120	35.0 … 120	35.0 … 120
		AWG	2 … 4/0	2 … 4/0	2 … 4/0
Weight	filtered	kg	52	52	52
		lb	115	115	115
	unfiltered	kg	36	36	36
		lb	79.5	79.5	79.5

Table 6- 10 Frame Sizes F, 3 AC 380 V … 480 V, ± 10%

Order No. unfiltered	6SL3224-	0BE38-8UA0	0BE41-1UA0
Rated power based on HO-loading	kW	90	110
	hp	125	150
Power loss	kW	2.4	2.5
Rated input current (HO)	A	205	235
Rated output current (HO)	A	178	205
Rated input current (LO)	A	234	284
Rated output current (LO)	A	205	250
Fuse	A	250	315
Required cooling air flow	l/s	150.0	150.0
	CFM	320	320
Input cable / Output cable	mm^2	35.0 … 120	35.0 … 120
	AWG	2 … 4/0	2 … 4/0
Weight	kg	39	39
	lb	90	90

Table 6- 11 Frame Sizes GX, 3 AC 380 V … 480 V, ± 10%

Order No. unfiltered	6SL3224-	0XE41-3UA0	0XE41-6UA0	0XE42-0UA0
Rated power based on HO-loading	kW	132	160	200
	hp	177	215	268
Power loss	kW	3.9	4.4	5.5
Rated input current (HO)	A	245	297	354
Rated output current (HO)	A	250	302	370
Rated input current (LO)	A	297	354	442
Rated output current (LO)	A	302	370	477
Fuse	A	355	400	630
Required cooling air flow	l/s	360	360	360
	CFM	760	760	760
Input cable / Output cable	mm^2	95 ... 240	120 ... 240	185 ... 240
	AWG	3/0 ... 600	4/0 ... 600	6/0 ... 600
Weight	kg	176	176	176
	lb	388	388	388

Accessories

7

Which accessory is available for which Power Module?

Accessory	available (✓) or not available (-) for Power Module …						
	FSA 0.37 kW ... 1.5 kW	FSB 2.2 kW ... 4 kW	FSC 5.5 kW ... 11 kW	FSD 15 kW ... 22 kW	FSE 30 kW ... 37 kW	FSF 45 kW ... 110 kW	FSGX 132 kW ... 200 kW
Line reactor	✓	✓	✓	✓	✓	✓	✓
Line filter	✓	✓	✓	✓	✓	✓	✓
Output reactor	✓	✓	✓	✓	✓	✓	✓
Sine-wave filter	✓	✓	✓	✓	✓	✓	✓
Brake chopper	Integrated in the Power Module						✓
Braking resistor	✓	✓	✓	✓	✓	✓	✓
Brake Relay and Safe Brake Relay	✓	✓	✓	✓	✓	✓	✓
DIN rail mounting kit	✓	✓	-	-	-	-	-
Screen termination kit	✓	✓	✓	✓	✓	✓	-

7.1 Reactor and filter

Line reactor

The purpose of a line reactor is to reduce line-side harmonic currents and harmonic effects. This applies particularly in the case of weak power supplies (network short-circuit power uK > 1 %).

Line filter

The Power Module complies with a higher radio interference class when an additional line filter is used.

Output reactor

Output reactors reduce the voltage loading on the motor windings. At the same time, the capacitive charge/discharge currents, which place an additional load on the power section when long motor cables are used, are reduced.

Sine-wave filter

The sine-wave filter is designed to limit the rate of rise of voltage and the capacitive charge or discharge currents which usually occur with inverter operation.

Connecting reactor and filter to the Power Module

The following drawings show the connecting order of the power components. Shielded cables are necessary if a line filter (external or integrated) is used.

Line fuses and contactor have to be installed between line reactor input and mains system.

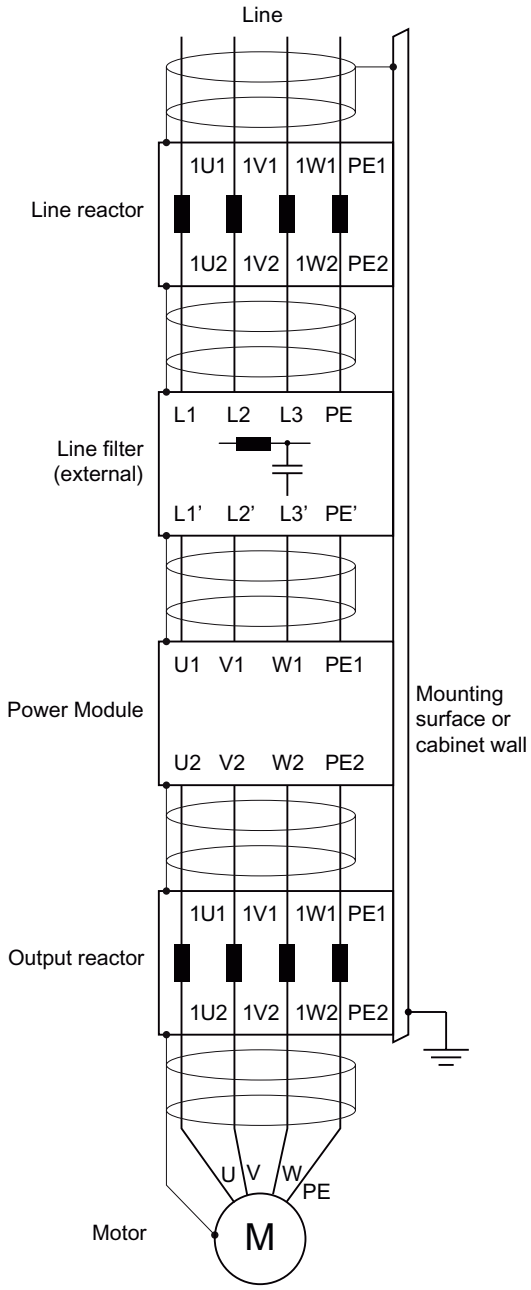

Connecting power components with output reactor

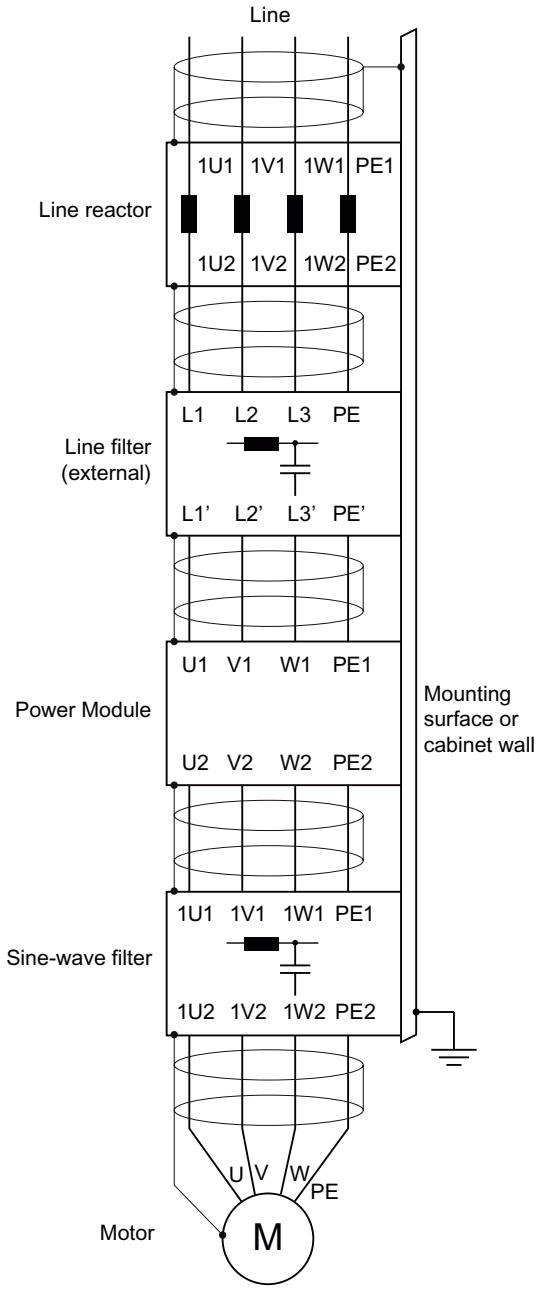

Connecting power components with sine-wave filter

Mounting base components

Many system components for the Power Modules are designed as base components, that is, the component is mounted on the cabinet wall and the Power Module above it in a space-saving construction. Up to two base components can be mounted above one another. Every further system component has to be mounted laterally.

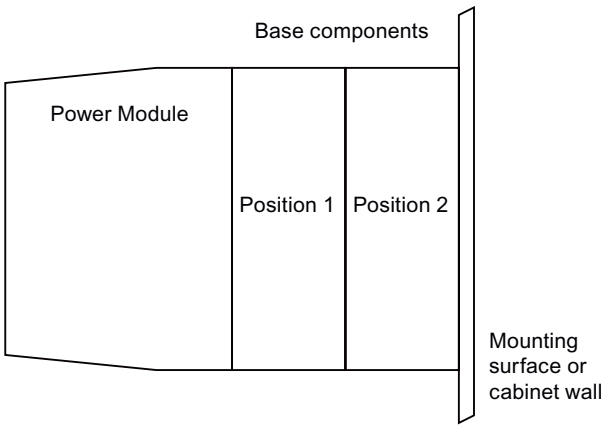

Figure 7-1 Mounting base components

Table 7- 1 Possible combinations of two base components

Power Module frame size	Base component on …	
	… position 1	… position 2
FSA and FSB 0.37 kW … 4 kW	Line reactor	Output reactor
		Sine-wave filter
		Braking resistor
	Line filter	Line reactor
		Output reactor
		Sine-wave filter
		Braking resistor
FSC 5.5 kW … 11 kW	Line reactor	Output reactor
		Sine-wave filter
	Line filter	Line reactor
		Output reactor
		Sine-wave filter

7.1.1 Line reactor

Installing the line reactor as base component

The line reactors for PM240 Power Modules of frame sizes FSA to FSE (0.37 kW … 37 kW) are designed as base components. The line reactor is attached to the mounting surface and the Power Module is mounted directly on the line reactor. The cables to the Power Module are already connected to the line reactor. The line reactor is connected to the line supply through terminals.

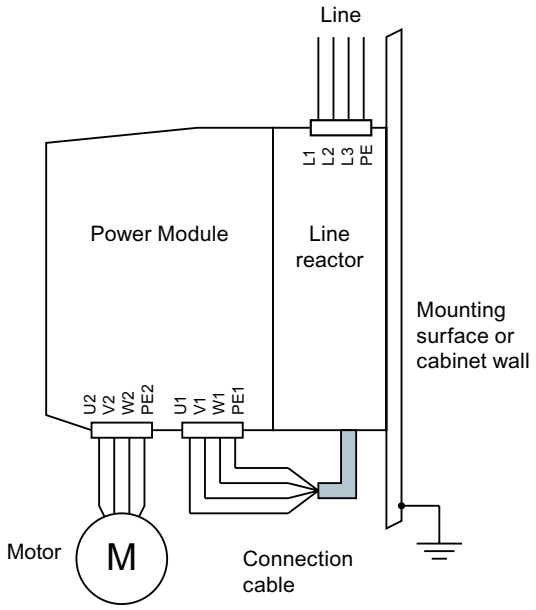

Figure 7-2 Connecting the line reactor as base component

The overall and mounting dimensions of the line reactor are written in the technical specifications. For more information see
http://support.automation.siemens.com/WW/view/en/23623183

Installing the line reactor as lateral mounting component

The line reactors for PM240 Power Modules of frame sizes FSF and FSGX (45 kW … 200 kW) have to be mounted laterally.

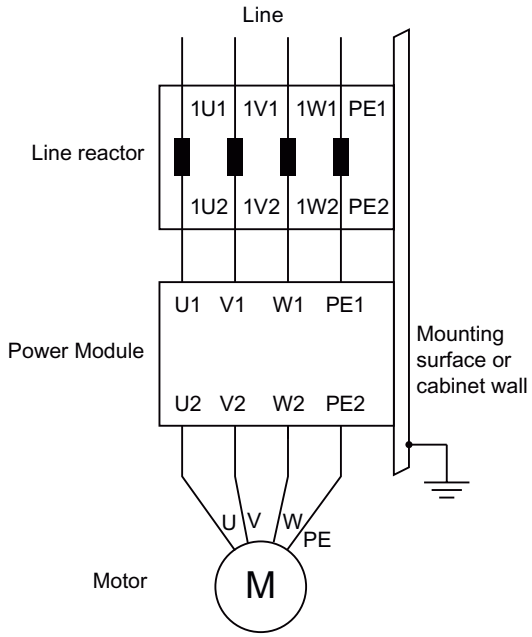

Figure 7-3 Connecting the line reactor as lateral mounting component

Technical specifications of the line reactors

The major electrical specification of the line reactors is the same as for the suitable Power Module. This applies to:

- line voltage
- line frequency
- rated current

The admissible ambient conditions of the line reactors are the same as for the suitable Power Module. This applies to:

- storage and transport temperature
- operating temperature
- relative humidity
- shock and vibration load

Table 7- 2 Technical specifications of the line reactors (table 1 of 6)

Feature	Suitable for Power Module with rated power (HO) of		
	0.37 kW ... 0.55 kW	0.75 kW ... 1.1 kW	1.5 kW
	FSA		
MLFB of the line reactor	6SE6400-3CC00-2AD3	6SE6400-3CC00-4AD3	6SE6400-3CC00-6AD3
MLFB of the suitable Power Module	6SL3224-0BE13-7UA0 6SL3224-0BE15-5UA0	6SL3224-0BE17-5UA0 6SL3224-0BE21-1UA0	6SL3224-0BE21-5UA0
Inductance	11.5 mH	6.3 mH	3.2 mH
Power loss at 50/60 Hz	6/7 W	12.5/15 W	7.5/9 W
Line connection	Screw terminals 1 … 2.5 mm²		
Connection to Power Module	Cable, 380 mm length		
Degree of protection	IP20		
Overall dimensions Width Height Depth	 75.5 mm 200 mm 50 mm		
Fixing dimensions Width Height	 187 mm 56 mm		
Fixing screw	4 × M4		
Weight	0.6 kg	0.8 kg	0.6 kg
Possible as base component	yes		

Table 7- 3 Technical specifications of the line reactors (table 2 of 6)

Feature	Suitable for Power Module with rated power (HO) of		
	2.2 kW ... 3 kW	4 kW	5.5 kW ... 7.5 kW
	FSB		FSC
MLFB of the line reactor	6SL3203-0CD21-0AA0	6SL3203-0CD21-4AA0	6SL3203-0CD22-2AA0
MLFB of the suitable Power Module	6SL3224-0BE22-2 . A0 6SL3224-0BE23-0 . A0	6SL3224-0BE24-0 . A0	6SL3224-0BE25-5 . A0 6SL3224-0BE27-5 . A0
Inductance	2.2 mH	1.3 mH	0.56 mH
Power loss at 50/60 Hz	9/11 W	27/32 W	98/118 W
Line connection	Screw terminals 1.5 … 6 mm²		Screw terminals 2.5 … 10 mm²
Connection to Power Module	Cable, 460 mm length		Cable, 490 mm length
Degree of protection	IP20		
Overall dimensions Width Height Depth	 153 mm 290 mm 70 mm		 189 mm 371 mm 50 mm

Feature	Suitable for Power Module with rated power (HO) of		
	2.2 kW ... 3 kW	4 kW	5.5 kW ... 7.5 kW
	FSB		FSC
Fixing dimensions Width Height	120 mm 200 mm		156 mm 232 mm
Fixing screw	4 × M4		4 × M5
Weight	3.4 kg	3.4 kg	5.2 kg
Possible as base component	yes		

Table 7- 4 Technical specifications of the line rectors (table 3 of 6)

Feature	Suitable for Power Module with rated power (HO) of		
	11 kW	15 kW ... 18.5 kW	22 kW
	FSC	FSD	
MLFB of the line reactor	6SL3203-0CD23-5AA0	6SL3203-0CJ24-5AA0	6SL3203-0CD25-3AA0
MLFB of the suitable Power Module	6SL3224-0BE31-1 . A0	6SL3224-0BE31-5 . A0 6SL3224-0BE31-8 . A0	6SL3224-0BE32-2 . A0
Inductance	0.28 mH	0.41 mH	0.29 mH
Power loss at 50/60 Hz	37/44 W	90/115 W	
Line connection	Screw terminals 16 mm²		
Connection to Power Module	Cable, 490 mm length	Cable, 700 mm length	
Degree of protection	IP20		
Overall dimensions Width Height Depth	189 mm 371 mm 50 mm	275 mm 455 mm 84 mm	
Fixing dimensions Width Height	156 mm 232 mm	235 mm 421 mm	
Fixing screw	4 × M5	4 × M8	
Weight	5.9 kg	13 kg	
Possible as base component	yes		

Table 7- 5 Technical specifications of the line rectors (table 4 of 6)

Feature	Suitable for Power Module with rated power (HO) of		
	30 kW ... 37 kW		
	FSE		
MLFB of the line reactor	6SL3203-0CJ28-6AA0		
MLFB of the suitable Power Module	6SL3224-0BE33-0 . A0 6SL3224-0BE33-7 . A0		
Inductance	0.22 mH		
Power loss at 50/60 Hz	170/215 W		
Line connection	Screw terminals 50 mm²		
Connection to Power Module	Cable, 700 mm length		
Degree of protection	IP20		
Overall dimensions Width Height Depth	 275 mm 577 mm 94 mm		
Fixing dimensions Width Height	 235 mm 544 mm		
Fixing screw	4 × M8		
Weight	13 kg		
Possible as base component	yes		

Table 7- 6 Technical specifications of the line rectors (table 5 of 6)

Feature	Suitable for Power Module with rated power (HO) of		
	45 kW ... 55 kW	75 kW	90 kW
	FSF		
MLFB of the line reactor	6SE6400-3CC11-2FD0	6SE6400-3CC11-7FD0	6SL3000-0CE32-3AA0
MLFB of the suitable Power Module	6SL3224-0BE34-5 . A0 6SL3224-0BE35-5 . A0	6SL3224-0BE37-5 . A0	6SL3224-0BE38-8UA0
Inductance	0.15 mH	90 µH	76 µH
Power loss at 50/60 Hz	280/360 W	280/360 W	240/270 W
Line connection	Flat connector for M8 cable lug		Flat connector for M10 cable lug
Connection to Power Module	Flat connector for M8 cable lug		Flat connector for M10 cable lug
Degree of protection	IP00		
Overall dimensions Width Height Depth	 240 mm 228 mm 141 mm		 270 mm 200 mm 248 mm

Feature	Suitable for Power Module with rated power (HO) of		
	45 kW ... 55 kW	75 kW	90 kW
	FSF		
Fixing dimensions Width Depth	95 mm 185 mm		101 mm 200 mm
Fixing screw	4 × M8		
Weight	25 kg		24 kg
Possible as base component	no		

Table 7- 7 Technical specifications of the line rectors (table 6 of 6)

Feature	Suitable for Power Module with rated power (HO) of		
	110 kW	132 kW	160 kW and 200 kW
	FSF	FSGX	
MLFB of the line reactor	6SL3000-0CE32-8AA0	6SL3000-0CE33-3AA0	6SL3000-0CE35-1AA0
MLFB of the suitable Power Module	6SL3224-0BE41-1UA0	6SL3224-0XE41-3UA0	6SL3224-0XE41-6UA0 6SL3224-0XE42-0UA0
Inductance	62 µH	52 µH	42 µH
Power loss at 50/60 Hz	210/250 W	270 W	365 W
Line connection	Flat connector for M10 cable lug		Flat connector for M12 cable lug
Connection to Power Module	Flat connector for M10 cable lug		Flat connector for M12 cable lug
Degree of protection	IP00		
Overall dimensions Width Height Depth	270 mm 200 mm 248 mm	270 mm 248 mm 200 mm	300 mm 269 mm 212,5 mm
Fixing dimensions Width Depth	101 mm 200 mm	200 mm 101 mm	224 mm 118 mm
Fixing screw	4 × M8		
Weight	24 kg	28 kg	38 kg
Possible as base component	no		

7.1.2 Line filter

Installing the line filter as base component

The line filters associated with the Power Modules of a rated power (HO) up to 11 kW are designed as base components. The line filter is attached to the mounting surface and the Power Module is mounted directly on the line filter.

The cables to the Power Module are already connected to the line filter. The line filter is connected to the line supply through terminals.

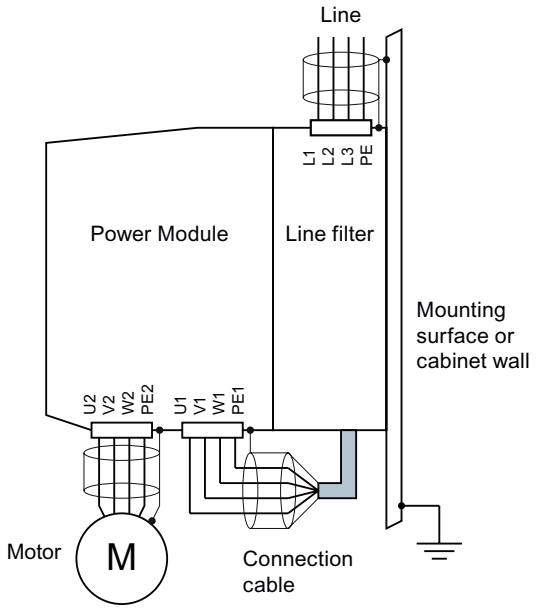

Figure 7-4 Connecting the line filter as base component

The overall and mounting dimensions of the line filter are written in the technical specifications.

Installing the line filter as lateral mounting component

The line filters for Power Modules with a rated power (HO) of more than 11 kW and line filters from third party suppliers have to be mounted laterally.

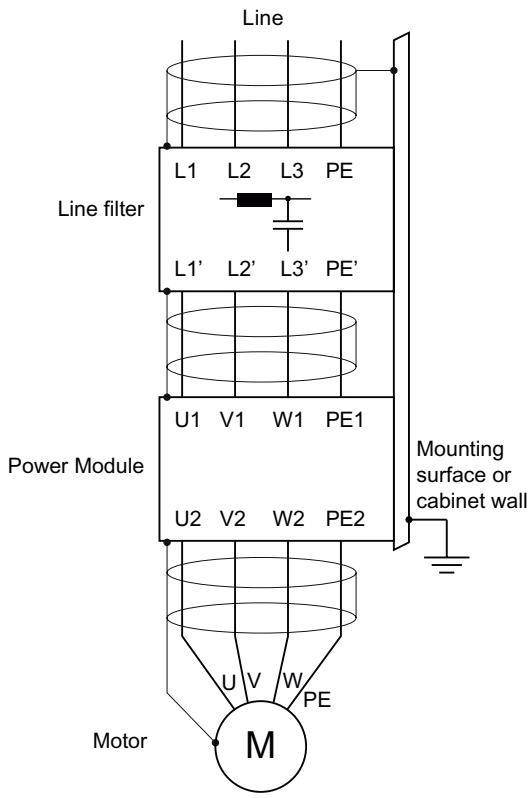

Figure 7-5 Connecting the line filter as lateral component

Shielded cables must be used from the line filter to the motor. The filter has to be installed as close as possible to the line entry of the cubicle.

Technical specifications of the line filters

The major electrical specification of the line filters is the same as for the suitable Power Module. This applies to:

- line voltage
- line frequency
- rated current

The admissible ambient conditions of the line filters are the same as for the suitable Power Module. This applies to:

- storage and transport temperature
- operating temperature
- relative humidity
- shock and vibration load

Table 7- 8 Technical specifications of the line filters class A

Feature	Suitable for Power Module with rated power (HO) of		
	0.37 kW ... 1.5 kW	90 kW ... 110 kW	132 kW ... 200 kW
	FSA	FSF	FSGX
MLFB of the line filter	6SE6400-2FA00-6AD0	6SL3203-0BE32-5AA0	6SL3000-0BE36-0AA0
MLFB of the suitable Power Module	6SL3224-0BE13-7UA0 6SL3224-0BE15-5UA0 6SL3224-0BE17-5UA0 6SL3224-0BE21-1UA0 6SL3224-0BE21-5UA0	6SL3224-0BE38-8UA0 6SL3224-0BE41-1UA0	6SL3224-0XE41-3UA0 6SL3224-0XE41-6UA0 6SL3224-0XE42-0UA0
Power loss at 50 Hz	0.5 ... 1.5 W	60 W	55 W
Line connection	Screw terminals 2.5 mm²	On housing via M8 screw stud	M10 connecting lugs
Connection to Power Module	Cable, 400 mm length	On housing via M8 screw stud	M10 connecting lugs
Degree of protection	IP20	IP00	
Overall dimensions Width Height Depth	 73 mm 200 mm 42.5 mm	 240 mm 360 mm 116 mm	 400 mm 265 mm 140 mm
Fixing dimensions Width Height	 56 mm 187 mm	 210 mm 220 mm	 240 mm 250 mm
Fixing screw	4 × M4	4 × M8	4 × M10
Weight	0.6 kg	12.4 kg	19 kg
Possible as base component	yes	no	

Table 7- 9 Technical specifications of the line filters class B

Feature	Suitable for Power Module with rated power (HO) of		
	0.37 kW ... 1.5 kW	2.2 kW ... 4 kW	5.5 kW ... 11 kW
	FSA	FSB	FSC
MLFB of the line filter	6SE6400-2FB00-6AD0	6SL3203-0BE21-6SA0	6SL3203-0BD23-8SA0
MLFB of the suitable Power Module	6SL3224-0BE13-7UA0 6SL3224-0BE15-5UA0 6SL3224-0BE17-5UA0 6SL3224-0BE21-1UA0 6SL3224-0BE21-5UA0	6SL3224-0BE22-2AA0 6SL3224-0BE23-0AA0 6SL3224-0BE24-0AA0	6SL3224-0BE25-5AA0 6SL3224-0BE27-5AA0 6SL3224-0BE31-1AA0
Power loss at 50 Hz	0.5 W ... 1.5 W	2.0 W ... 4.0 W	7.5 W ... 15 W
Line connection	Screw terminals 2.5 mm²	Screw terminals 2.5 mm²	Screw terminals 4 mm²
Connection to Power Module	Cable, 400 mm length	Cable, 400 mm length	Cable, 400 mm length
Degree of protection	IP20		

Feature	Suitable for Power Module with rated power (HO) of		
	0.37 kW ... 1.5 kW	2.2 kW ... 4 kW	5.5 kW ... 11 kW
	FSA	FSB	FSC
Overall dimensions Width Height Depth	 73 mm 200 mm 42.5 mm	 153 mm 296 mm 50 mm	 190 mm 362 mm 55 mm
Fixing dimensions Width Height	 56 mm 187 mm	 120 mm 200 mm	 156 mm 232 mm
Fixing screw	4 × M4		4 × M5
Weight	0.5 kg	1.5 kg	2.3 kg
Possible as base component	yes		

7.1.3 Output reactor

Installing the output reactor as base component

The output reactors for Power Modules with a rated power (HO) up to 11 kW are designed as base components. The output reactor is attached to the mounting surface and the Power Module is mounted directly on the output reactor.

The cables to the Power Module are already connected to the output reactor. The output reactor is connected to the motor through terminals.

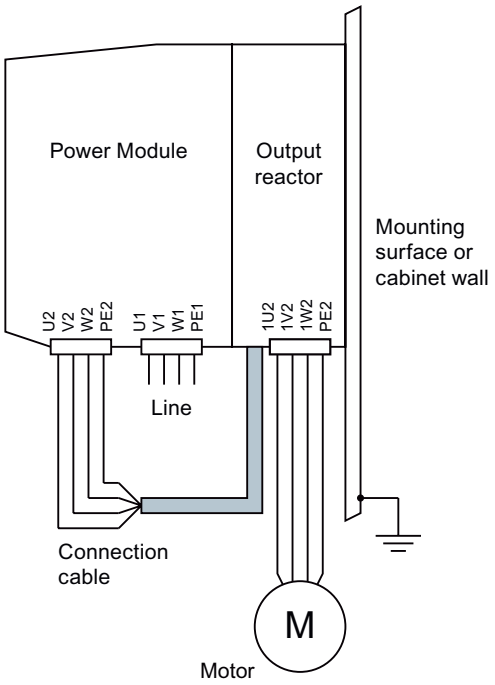

Figure 7-6 Connecting the output reactor as base component

The overall and mounting dimensions of the output reactor are written in the technical specifications.

Installing the output reactor as lateral mounting component

The output reactors for Power Modules with a rated power (HO) of more than 11 kW have to be mounted laterally.

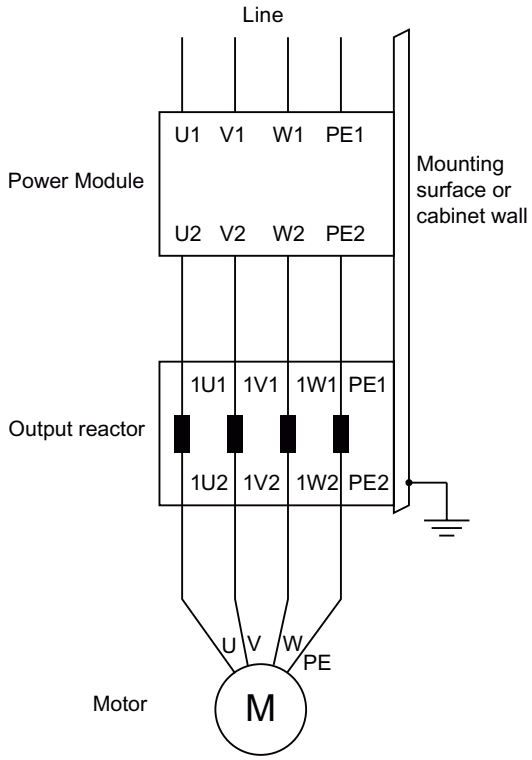

Figure 7-7 Connecting the output reactor as lateral component

For more information see http://support.automation.siemens.com/WW/view/en/22103628

Technical specifications of the output reactors

The major electrical specification of the output reactors is the same as for the suitable Power Module. This applies to:

- voltage
- rated current

The maximum permissible output frequency of the Power Module is 150 Hz when an output reactor is used – the pulse frequency must not exceed 4 kHz.

The admissible ambient conditions of the output reactors are the same as for the suitable Power Module. This applies to:

- storage and transport temperature
- operating temperature
- relative humidity
- shock and vibration load

Table 7- 10 Technical specifications of the output reactors (table 1 of 6)

Feature	Suitable for Power Module with rated power (HO) of		
	0.37 kW ... 1.5 kW	2.2 kW … 4 kW	5.5 kW … 11 kW
	FSA	FSB	FSC
MLFB of the line reactor	6SE6400-3TC00-4AD2	6SL3202-0AE21-0CA0	6SL3202-0AJ23-2CA0
MLFB of the suitable Power Module	6SL3224-0BE13-7UA0 6SL3224-0BE15-5UA0 6SL3224-0BE17-5UA0 6SL3224-0BE21-1UA0 6SL3224-0BE21-5UA0	6SL3224-0BE22-2 . A0 6SL3224-0BE23-0 . A0 6SL3224-0BE24-0 . A0	6SL3224-0BE25-5 . A0 6SL3224-0BE27-5 . A0 6SL3224-0BE31-1 . A0
Power loss at 50/60 Hz	5 W	20 W	60 W
Motor connection	Screw terminals 6 mm²		
Connection to Power Module	Cable, 300 mm length	Cable, 400 mm length	Cable, 350 mm length
Degree of protection	IP00		
Overall dimensions Width Height Depth	 75.5 mm 200 mm 110 mm	 154 mm 270 mm 70 mm	 189 mm 334 mm 80 mm
Fixing dimensions Width Height	 56 mm 187 mm	 120 mm 200 mm	 156 mm 232 mm
Fixing screw	4 × M4		4 × M5
Weight	2 kg	4.5 kg	9 kg
Possible as base component	yes		

Table 7- 11 Technical specifications of the output reactors (table 2 of 6)

Feature	Suitable for Power Module with rated power (HO) of		
	15 kW	18.5 kW	22 kW
	FSD		
MLFB of the line reactor	6SE6400-3TC05-4DD0	6SE6400-3TC03-8DD0	6SE6400-3TC05-4DD0
MLFB of the suitable Power Module	6SL3224-0BE31-5 . A0	6SL3224-0BE31-8 . A0	6SL3224-0BE32-2 . A0
Power loss at 50/60 Hz	200 W	200 W	200 W
Motor connection	Flat connector for M6 cable lug		
Connection to Power Module	Flat connector for M6 cable lug		
Degree of protection	IP00		
Overall dimensions Width Height Depth	 225 mm 210 mm 150 mm		

Feature	Suitable for Power Module with rated power (HO) of		
	15 kW	18.5 kW	22 kW
	FSD		
Fixing dimensions Width Height	70 mm 176 mm	94 mm 176 mm	70 mm 176 mm
Fixing screw	4 × M6		
Weight	10.5 kg	16 kg	10.5 kg
Possible as base component	no		

Table 7- 12 Technical specifications of the output reactors (table 3 of 6)

Feature	Suitable for Power Module with rated power (HO) of		
	30 kW	37 kW	45 kW
	FSE		FSF
MLFB of the line reactor	6SE6400-3TC08-0ED0	6SE6400-3TC07-5ED0	6SE6400-3TC14-5FD0
MLFB of the suitable Power Module	6SL3224-0BE33-0 . A0	6SL3224-0BE33-7 . A0	6SL3224-0BE34-5 . A0
Power loss at 50/60 Hz	170 W	270 W	470 W
Motor connection	Flat connector for M6 cable lug		Flat connector for M8 cable lug
Connection to Power Module	Flat connector for M6 cable lug		Flat connector for M8 cable lug
Degree of protection	IP00		
Overall dimensions Width Height Depth	225 mm 210 mm 150 mm	270 mm 248 mm 209 mm	350 mm 321 mm 288 mm
Fixing dimensions Width Height	70 mm 176 mm	101 mm 200 mm	138 mm 264 mm
Fixing screw	4 × M6	4 × M8	
Weight	10.5 kg	25 kg	52 kg
Possible as base component	no		

Table 7- 13 Technical specifications of the output reactors (table 4 of 6)

Feature	Suitable for Power Module with rated power (HO) of		
	55 kW	75 kW	90 kW
	FSF		
MLFB of the line reactor	6SE6400-3TC15-4FD0	6SE6400-3TC14-5FD0	6SL3000-2BE32-1AA0
MLFB of the suitable Power Module	6SL3224-0BE35-5 . A0	6SL3224-0BE37-5 . A0	6SL3224-0BE38-8UA0
Power loss at 50/60 Hz	250 W	470 W	490 W
Motor connection	Flat connector for M8 cable lug		Flat connector for M10 cable lug
Connection to Power Module	Flat connector for M8 cable lug		Flat connector for M10 cable lug
Degree of protection	IP00		
Overall dimensions Width Height Depth	 270 mm 248 mm 209 mm	 350 mm 321 mm 288 mm	 300 mm 285 mm 257 mm
Fixing dimensions Width Height	 101 mm 200 mm	 138 mm 264 mm	 163 mm 224 mm
Fixing screw	4 × M8		
Weight	52 kg		
Possible as base component	no		

Table 7- 14 Technical specifications of the output reactors (table 5 of 6)

Feature	Suitable for Power Module with rated power (HO) of		
	110 kW	132 kW	160 kW
	FSF	FSGX	
MLFB of the line reactor	6SL3000-2BE32-6AA0	6SL3000-2BE33-2AA0	6SL3000-2BE33-8AA0
MLFB of the suitable Power Module	6SL3224-0BE41-1UA0	6SL3224-0XE41-6UA0	6SL3224-0XE42-0UA0
Power loss at 50/60 Hz	500 W	470 W	500 W
Motor connection	Flat connector for M10 screw	Flat connector for M10 screw	Flat connector for M10 screw
Connection to Power Module	Flat connector for M10 screw	Flat connector for M10 screw	Flat connector for M10 screw
Degree of protection	IP00		
Overall dimensions Width Height Depth	 300 mm 315 mm 277 mm	 300 mm 285 mm 257 mm	 300 mm 285 mm 277 mm
Fixing dimensions Width Height	 183 mm 224 mm	 163 mm 224 mm	 183 mm 224 mm

Feature	Suitable for Power Module with rated power (HO) of		
	110 kW	132 kW	160 kW
	FSF	FSGX	
Fixing screw		4 × M8	
Weight	52 kg	66 kg	73 kg
Possible as base component	no		

Table 7- 15 Technical specifications of the output reactors (table 6 of 6)

Feature	Suitable for Power Module with rated power (HO) of		
	200 kW		
	FSGX		
MLFB of the line reactor	6SL3000-2BE35-0AA0		
MLFB of the suitable Power Module	6SL3224-0XE41-3UA0		
Power loss at 50 Hz	500 W		
Motor connection	Flat connector for M12 screw		
Connection to Power Module	Flat connector for M12 screw		
Degree of protection	IP00		
Overall dimensions Width Height Depth	 300 mm 365 mm 277 mm		
Fixing dimensions Width Height	 183 mm 224 mm		
Fixing screw	M10		
Weight	100 kg		
Possible as base component	no		

7.1.4 Sine-wave filter

Installing the sine-wave filter as base component

The sine-wave filters for Power Modules with a rated power (HO) up to 11 kW are designed as base components. The sine-wave filter is attached to the mounting surface and the Power Module is mounted directly on the sine-wave filter. The cables to the Power Module are already connected to the sine-wave filter. The sine-wave filter is connected to the motor through terminals.

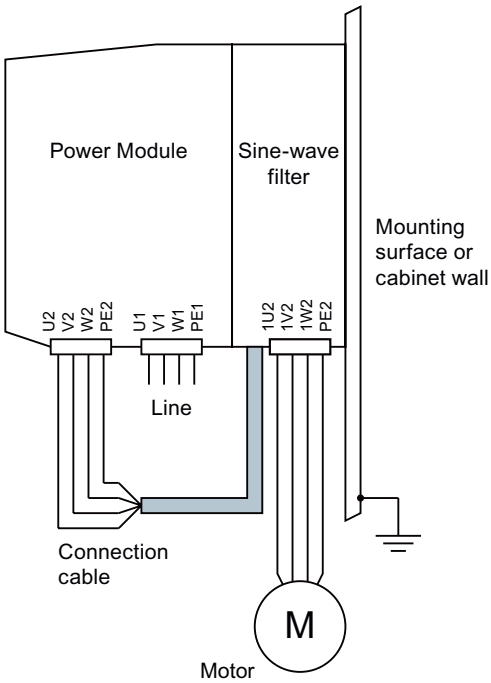

Figure 7-8 Connecting the sine-wave filter as base component

The overall and mounting dimensions of the sine-wave filter are written in the technical specifications.

Installing the sine-wave filter as lateral mounting component

The sine-wave filter for Power Modules with a rated power (HO) of more than 11 kW has to be mounted laterally.

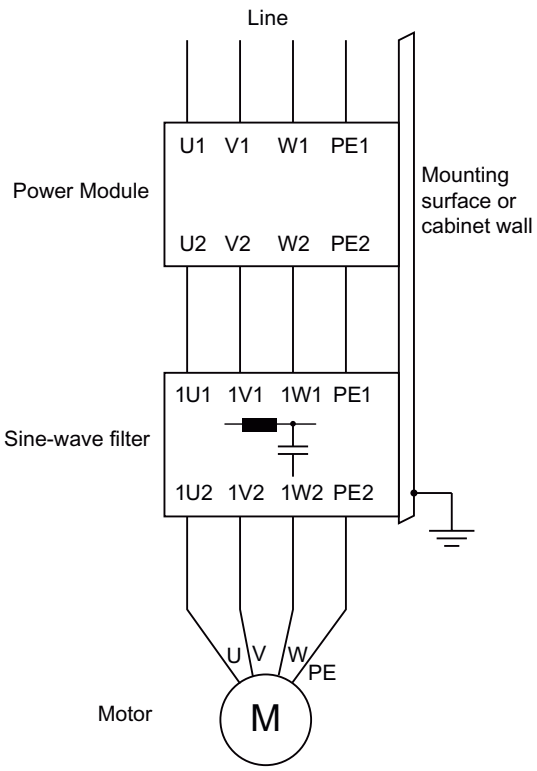

Figure 7-9 Connecting the sine-wave filter as lateral component

For more information see http://support.automation.siemens.com/WW/view/en/29522775

Technical specifications of the sine-wave filter

The major electrical specification of the sine-wave filter is the same as for the suitable Power Module. This applies to:

- voltage
- current

The maximum permissible output frequency of the Power Module is 150 Hz when a sine-wave filter is used – the pulse frequency must not exceed 8 kHz.

The admissible ambient conditions of the sine-wave filter are the same as for the suitable Power Module. This applies to:

- storage and transport temperature
- operating temperature
- relative humidity
- shock and vibration load

Table 7- 16 Technical specifications of the sine-wave filters (table 1 of 5)

Feature	Suitable for Power Module with rated power (HO) of		
	0.37 kW ... 0.75 kW	1.1 kW … 1.5 kW	2.2 kW …3 kW
	FSA		FSB
MLFB of the sine-wave filter	6SL3202-0AE20-3SA0	6SL3202-0AE20-6SA0	6SL3202-0AE21-1SA0
MLFB of the suitable Power Module	6SL3224-0BE13-7UA0 6SL3224-0BE15-5UA0 6SL3224-0BE17-5UA0	6SL3224-0BE21-1UA0 6SL3224-0BE21-5UA0	6SL3224-0BE22-2 . A0 6SL3224-0BE23-0 . A0
Power loss at 50 Hz	10 W	20 W	22 W
dv/dt limiting	≤ 500 V/µs		
Motor connection	Screw terminals 6 mm²		
Connection to Power Module	Cable, 500 mm length		
Degree of protection	IP20		
Overall dimensions Width Height Depth	75.5 mm 200 mm 110 mm		153 mm 270 mm 100 mm
Installation clearance Top Bottom Side	100 mm 100 mm 100 mm		
Fixing dimensions Width Height	56 mm 187 mm	56 mm 187 mm	133 mm 258 mm
Fixing screw	4 × M4		4 × M4
Weight	2.6 kg	3.0 kg	6.0 kg
Possible as base component	yes		

Table 7- 17 Technical specifications of the sine-wave filters (table 2 of 5)

Feature	Suitable for Power Module with rated power (HO) of		
	4 kW	5.5 kW	7.5 kW … 11 kW
	FSB	FSC	
MLFB of the sine-wave filter	6SL3202-0AE21-4SA0	6SL3202-0AE22-0SA0	6SL3202-0AE23-3SA0
MLFB of the suitable Power Module	6SL3224-0BE24-0 . A0	6SL3224-0BE25-5 . A0	6SL3224-0BE27-5 . A0 6SL3224-0BE31-1 . A0
dv/dt limiting	≤ 500 V/µs		
Power loss at 50 Hz	36 W	40 W	65 W
Motor connection	Screw terminals 6 mm²	Screw terminals 10 mm²	
Connection to Power Module	Cable, 500 mm length	Cable, 500 mm length	
Degree of protection	IP20		

Feature	Suitable for Power Module with rated power (HO) of		
	4 kW	5.5 kW	7.5 kW … 11 kW
	FSB	FSC	
Overall dimensions Width Height Depth	 153 mm 270 mm 100 mm	 189 mm 336 mm 140 mm	
Installation clearance Top Bottom Side	 100 mm 100 mm 100 mm		
Fixing dimensions Width Height	 133 mm 258 mm	 167 mm 323 mm	
Fixing screw	4 × M4	4 × M5	
Weight	10.0 kg	12.0 kg	23.0 kg
Possible as base component	yes		

Table 7- 18 Technical specifications of the sine-wave filters (table 3 of 5)

Feature	Suitable for Power Module with rated power (HO) of		
	15 kW … 18.5 kW	22 kW	30 kW … 37 kW
	FSD		FSE
MLFB of the sine-wave filter	6SL3202-0AE24-6SA0	6SL3202-0AE26-2SA0	6SL3202-0AE28-8SA0
MLFB of the suitable Power Module	6SL3224-0BE31-5 . A0 6SL3224-0BE31-8 . A0	6SL3224-0BE32-2 . A0	6SL3224-0BE33-0 . A0 6SL3224-0BE33-7 . A0
dv/dt limiting	≤ 500 V/µs		
Power loss at 50 Hz	80 W	65 W	100 W
Motor connection	Screw terminals 25 … 50 mm²		Screw terminals 25 … 95 mm²
Connection to Power Module	Screw terminals 25 … 50 mm²		Screw terminals 25 … 95 mm²
Degree of protection	IP00 without terminal cover, IP20 with terminal cover		
Overall dimensions Width Height Depth	 250 mm 305 mm 262 mm	 250 mm 315 mm 262 mm	 275 mm 368 mm 275 mm
Installation clearance Top Bottom Side	 100 mm - 100 mm		
Fixing dimensions Width Depth	 230 mm 127 mm		 250 mm 132 mm
Fixing screw	4 × M6		4 × M8

Feature	Suitable for Power Module with rated power (HO) of		
	15 kW … 18.5 kW	22 kW	30 kW … 37 kW
	FSD		FSE
Weight	24 kg	34 kg	45 kg
Possible as base component	no		

Table 7- 19 Technical specifications of the sine-wave filters (table 4 of 5)

Feature	Suitable for Power Module with rated power (HO) of		
	45 kW … 55 kW	75 kW	90 kW … 110 kW
	FSF		
MLFB of the sine-wave filter	6SL3202-0AE31-5SA0	6SL3202-0AE31-8SA0	6SL3000-2CE32-3AA0
MLFB of the suitable Power Module	6SL3224-0BE34-5 . A0	6SL3224-0BE35-5 . A0	6SL3224-0BE38-8UA0 6SL3224-0BE41-1UA0
dv/dt limiting	≤ 500 V/µs		
Power loss at 50 Hz	180 W	190 W	200 W
Motor connection	Screw terminals 50 … 150 mm²		Flat connector for M10 cable lug
Connection to Power Module	Screw terminals 50 … 150 mm²		Flat connector for M10 cable lug
Degree of protection	IP00 without terminal cover, IP20 with terminal cover		IP00
Overall dimensions Width Height Depth	 350 mm 440 mm 305 mm	 350 mm 468 mm 305 mm	 620 mm 320 mm 300 mm
Installation clearance Top Bottom Side	 100 mm - 100 mm		
Fixing dimensions Width Depth	 320 mm 255 mm	 320 mm 155 mm	 225 mm and 150 mm 280 mm
Fixing screw	4 × M8		6 × M10
Weight	63 kg	80 kg	124 kg
Possible as base component	no		

Table 7- 20 Technical specifications of the sine-wave filters (table 5 of 5)

Feature	Suitable for Power Module with rated power (HO) of		
	132 kW	160 kW	200 kW
	FSGX		
MLFB of the sine-wave filter	6SL3000-2CE32-8AA0	6SL3000-2CE33-3AA0	6SL3000-2CE34-1AA0
MLFB of the suitable Power Module	6SL3224-0XE41-6UA0	6SL3224-0XE42-0UA0	6SL3224-0XE41-3UA0
dv/dt limiting	≤ 500 V/µs		
Power loss at 50 Hz	230 W	180 W	230 W
Motor connection	Flat connector for M10 cable lug		
Connection to Power Module	Flat connector for M10 cable lug		
Degree of protection	IP00		
Overall dimensions Width Height Depth	 620 mm 320 mm 300 mm	 620 mm 370 mm 360 mm	 620 mm 370 mm 360 mm
Installation clearance Top Bottom Side	 100 mm -- 100 mm		
Fixing dimensions Width Depth	 225 mm and 150 mm 280 mm	 225 mm and 150 mm 320 mm	
Fixing screw	6 × M10		
Weight	127 kg	136 kg	198 kg
Possible as base component	no		

7.2 Brake chopper (FSGX)

The function of the brake chopper

The brake chopper controls the external braking resistor.

- The brake chopper is integrated in the Power Module FSA … FSF
- The Power Module FSGX does **not** contain a brake chopper. The brake chopper is available as an accessory only for the Power Module FSGX

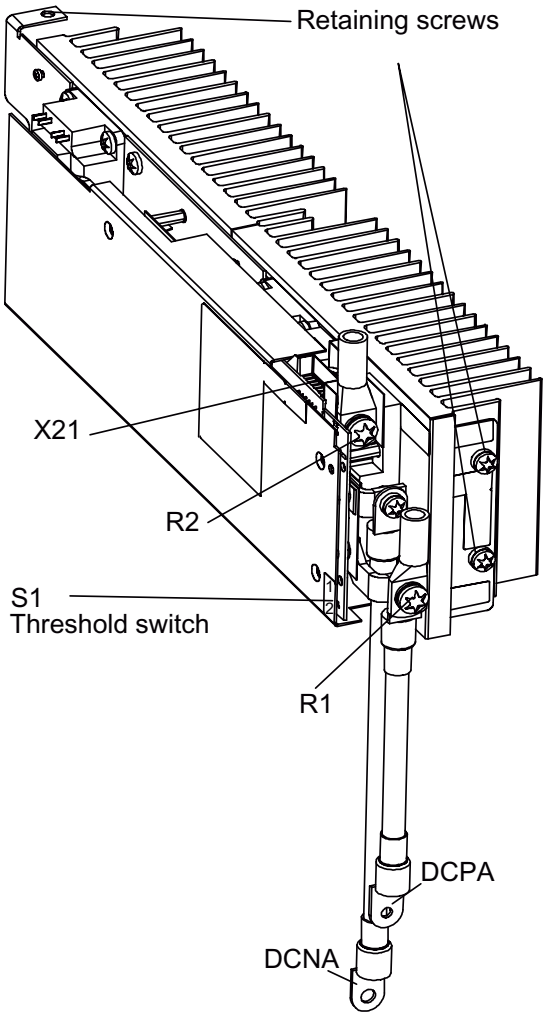

Figure 7-10 Brake chopper for Power Module FSGX

7.2.1 Installing the Brake chopper (FSGX)

The brake chopper is installed in a slot within the Power Module FSGX and force-cooled by its fan. The brake chopper is connected to the DC link by means of flexible cables, which are supplied as standard.

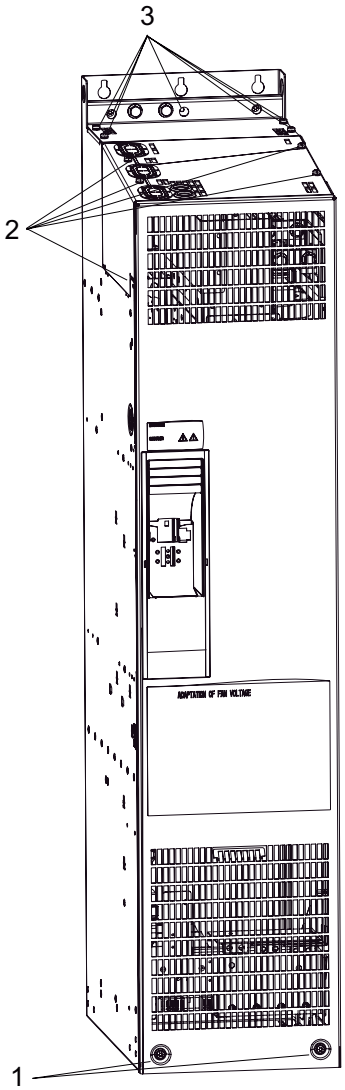

Figure 7-11 Installing the brake chopper in a Power Module FSGX - steps 1 - 3

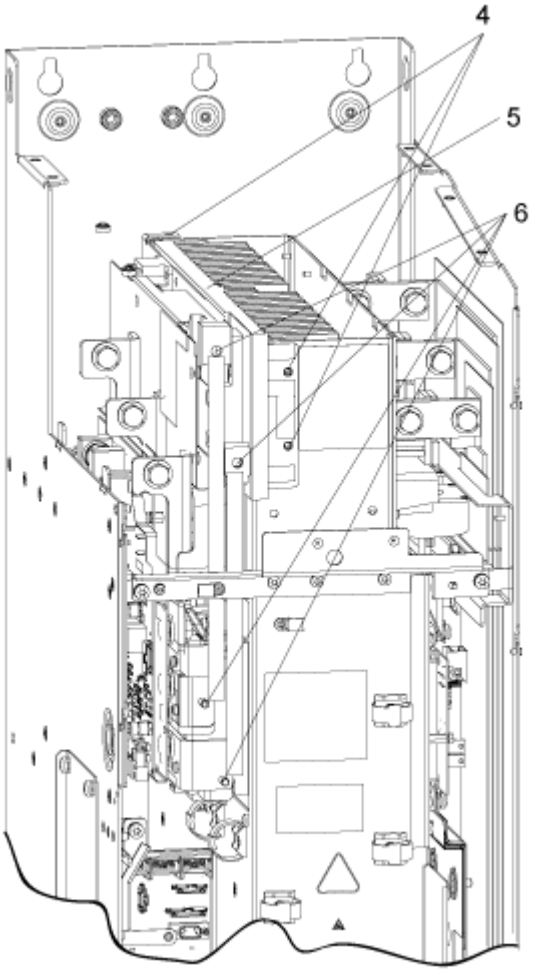

Figure 7-12 Installing the brake chopper in a Power Module FSGX – steps 4 - 6

Installing the brake chopper

The steps for the installation procedure are numbered in accordance with the figures in the diagrams.

1. Unscrew the 2 M6 screws from the front cover and lift off the cover.
2. Unscrew the 4 screws from the upper cover plate.
   Unscrew the 1 x M6 nut on the left-hand side and remove the front cover.
3. Unscrew the 4 screws from the upper cover plate.
   Unscrew the 3 screws from the rear cut-out sections and remove the rear cover.
4. Unscrew the 3 screws for the blanking plate and remove the plate.
5. Insert the brake chopper where the cover used to be and secure it using the 3 screws (from step 4).

6. Secure the connecting cable to the DC link with 2 screws (brake chopper connection) and 2 nuts (DC link connection).

Carry out the subsequent steps in reverse order from steps 1 – 3.

An opening above the connections for the braking resistor (R1, R2) is provided in the cover for connecting the cable to the braking resistor.

CAUTION
You must observe the tightening torques. Information on this can be found in the table in the "Mechanical installation" section

7.2.2 Connecting the brake chopper to the PM

Interface overview

The brake chopper has the following interfaces:

- DC link connection via flexible cables or a fixed busbar
- Braking resistor connection via flexible cables or a fixed busbar
- 1 digital input (inhibit brake chopper with high signal/acknowledge error with negative edge high -> low)
- 1 digital output (brake chopper defective)
- PE/protective conductor connection

Connection overview

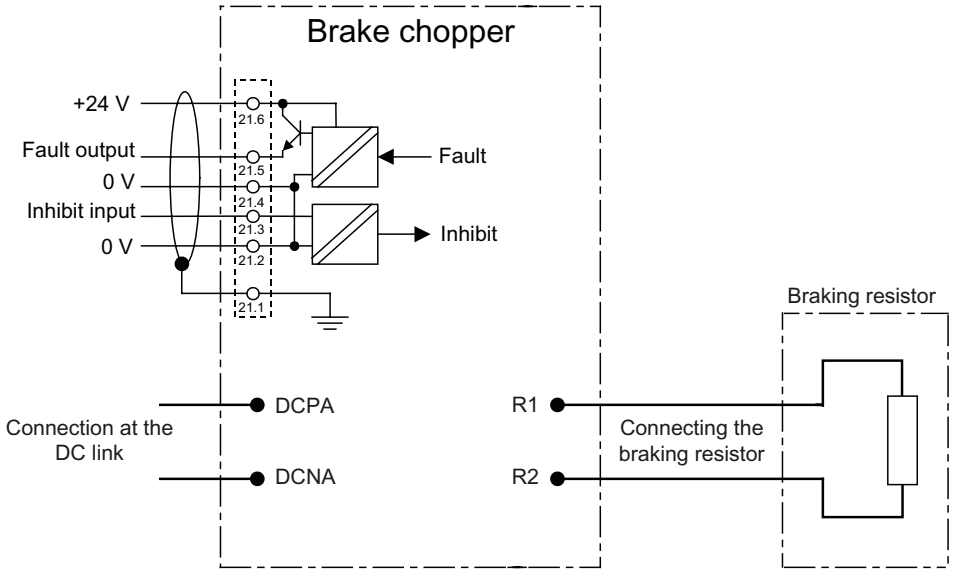

Figure 7-13 Connection overview of the brake chopper

Digital input and output

The connection of the digital input and output is not required for the function of the brake chopper.

Table 7- 21 Terminal block X21

	Terminal	Designation	Technical specifications
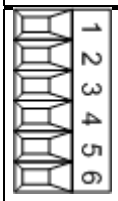	1	Shield	Shield connection for terminals 2 ... 6
	2	0 V	High signal level: +15 V to 30 V Current consumption: 2 mA to 15 mA Low signal level: -3 V to 5 V
	3	Inhibit (digital input)	
	4	0 V	High signal: No fault Low signal: Fault present Voltage: 24 V DC Load current: 0.5 mA to 0.6 mA
	5	Fault (digital output)	
	6	+24 V	Voltage: +18 V to +30 V Typical current consumption (induced current consumption): 10 mA at 24 V DC
Max. connectable cross-section 1.5 mm^2			

Note

Applying a high signal to terminal X21.3 inhibits the brake chopper. With a falling edge, pending fault codes are acknowledged.

Threshold switch

The response threshold at which the brake chopper is activated and the DC link voltage generated during braking are specified in the following table.

⚠ WARNING
The threshold switch must only be used when the Power Module is switched off and the DC link capacitors are discharged.

Table 7- 22 Response thresholds of the brake chopper

Rated voltage	Response threshold	Switch position	Comments
3 AC 380 V … 480 V	673 V	1 ("top")	774 V is the default factory setting. With line voltages of between 380 V and 400 V, the response threshold can be set to 673 V to reduce the voltage stress on the motor and converter. This does, however, reduce the possible braking power with the square of the voltage (673/774)² = 0.75. The maximum possible braking power is, therefore, 75%.
	774 V	2 (bottom")	

7.3 Braking Resistor

Braking resistor

The braking resistor is designed for the SINAMICS G120 inverters with an internal brake chopper and enables loads with a large moment of inertia to be braked quickly. During braking of the motor and the load, excess energy is fed back to the inverter. This causes the voltage to rise in the DC link. The inverter transfers the excess energy to the externally mounted braking resistor.

7.3.1 Mounting the braking resistors

The following points must be taken into account generally:

- Sufficient space must be available for dissipating the energy converted by the braking resistor.
- A sufficient distance from flammable objects must be maintained.
- The braking resistor should not be installed underneath fire detection systems, since these could be triggered by the resulting heat.
- For outdoor installation, a hood should be provided to protect the braking resistor against precipitation (in accordance with degree of protection IP20).

Braking resistor for Power Modules FSA and FSB (0.37 kW … 4 kW)

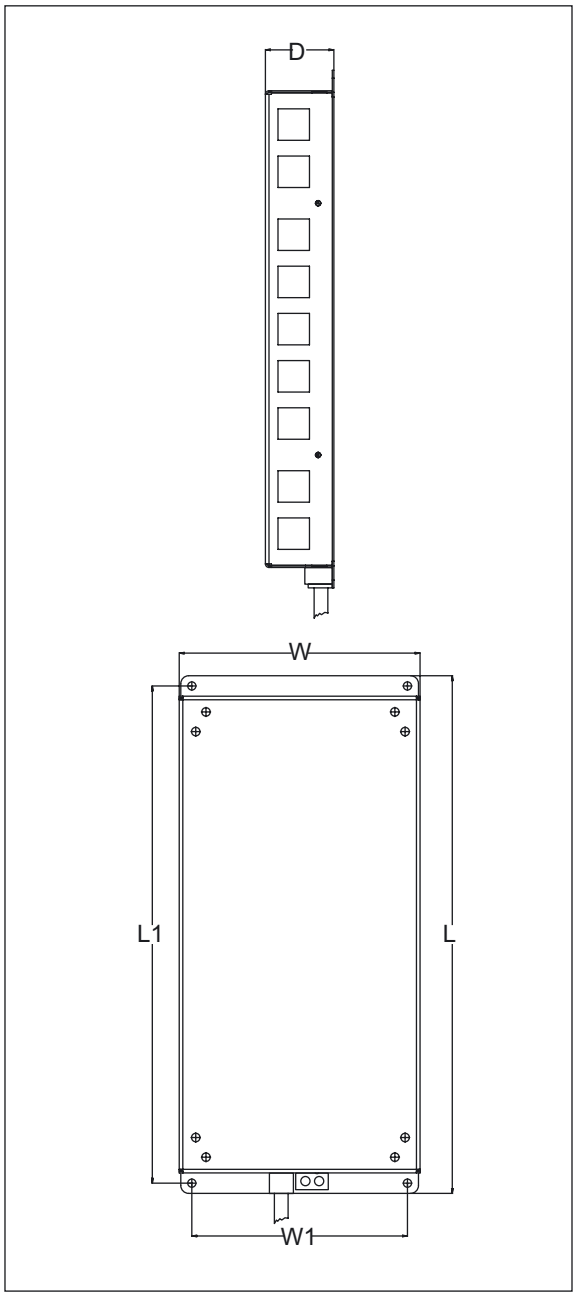

Figure 7-14 Dimensions of the braking resistor, FSA and FSB

Table 7- 23 Dimension data: Braking resistor, all data in mm and (inches)

Order No. of the braking resistor	6SE6400-4BD11-0AA0	6SL3201-0BE12-0AA0
Suitable for Power Module (HO)	FSA	FSB
	0.37 kW ... 1.5 kW	2.2 kW ... 4 kW
Order-No. of the suitable Power Module	6SL3224-0BE13-7UA0 6SL3224-0BE15-5UA0 6SL3224-0BE17-5UA0 6SL3224-0BE21-1UA0 6SL3224-0BE21-5UA0	6SL3224-0BE22-2 . A0 6SL3224-0BE23-0 . A0 6SL3224-0BE24-0 . A0
L	230 (9.05)	239 (9.40)
L1	217 (8.54)	226 (8.89)
D	43.5 (1.71)	43.5 (1.71)
W	72 (2.83)	149 (5.86)
W1	56 (2.20)	138 (5.43)

The braking resistors can be installed horizontally or vertically. The connections on vertically installed resistors must be at the bottom.

The braking resistors for the FSA and FSB frame sizes are designed as sub-chassis components. If the PM240 Power Modules of the FSA or FSB frame size are operated without line reactor, the braking resistors can also be installed under the Power Modules.

The braking resistor can be positioned outside the cabinet or switchgear room. This enables the resulting heat loss around the Power Modules to be dissipated. This reduces the level of air conditioning required.

Braking resistor for Power Modules FSC … FSF (5.5 kW … 110 kW)

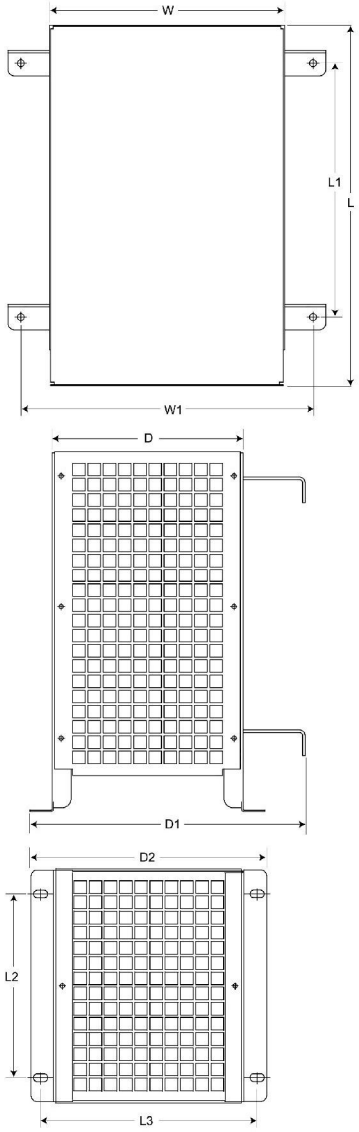

Figure 7-15 Dimensions of the braking resistors, FSC ... FSF

Table 7- 24 Dimension data: Braking resistor, all data in mm and (inches), Part 1

Order No. of the braking resistor	6SE6400-4BD16-5CA0	6SE6400-4BD21-2DA0	6SE6400-4BD22-2EA0
Suitable for Power Module (HO)	FSC	FSD	FSE
	5.5 kW ... 11 kW	15 kW ... 22 kW	30 kW ... 37 kW
Order-No. of the suitable Power Module	6SL3224-0BE25-5 . A0 6SL3224-0BE27-5 . A0 6SL3224-0BE31-1 . A0	6SL3224-0BE31-5 . A0 6SL3224-0BE31-8 . A0 6SL3224-0BE32-2 . A0	6SL3224-0BE33-0 . A0 6SL3224-0BE33-7 . A0
L	285 (11.22)	515 (20.27)	645 (25.39)
L1	200 (7.87)	350 (13.77)	480 (18.89)
L2	145 (5.70)	205 (8.07)	205 (8.07)
L3	170 (6.69)	195 (7.67)	195 (7.67)
D	150 (5.90)	175 (6.88)	175 (6.88)
D1	217 (8.54)	242 (9.52)	242 (9.52)
D2	185 (7.28)	210 (8.26)	210 (8.26)
W	185 (7.28)	270 (10.62)	270 (10.62)
W1	230 (9.05)	315 (12.40)	315 (12.40)

Table 7- 25 Dimension data: Braking resistor, all data in mm and (inches), Part 2

Order No. of the braking resistor	6SE6400-4BD24-0FA0	6SE6400-4BD26-0FA0
Suitable for Power Module (HO)	FSF	
	45 kW ... 75 kW	90 kW ... 110 kW
Order-No. of the suitable Power Module	6SL3224-0BE34-5 . A0 6SL3224-0BE35-5 . A0 6SL3224-0BE37-5 . A0	6SL3224-0BE38-8UA0 6SL3224-0BE41-1UA0
L	650 (25.59)	526 (20.71)
L1	510 (20.07)	-
L2	270 (10.62)	380 (14.96)
L3	335 (13.18)	500 (19.69)
D	315 (12.40)	301 (11.85)
D1	382 (15.03)	-
D2	382 (15.03)	-
W	400 (15.74)	483 (19.09)
W1	435 (17.12)	-

The braking resistors can be installed horizontally or vertically. The connections on vertically installed resistors must be at the bottom.

The braking resistor can be positioned outside the cabinet or switchgear room. This enables the resulting heat loss around the Power Modules to be dissipated. This reduces the level of air conditioning required.

Braking resistor for Power Module FSGX (132 kW … 200 kW)

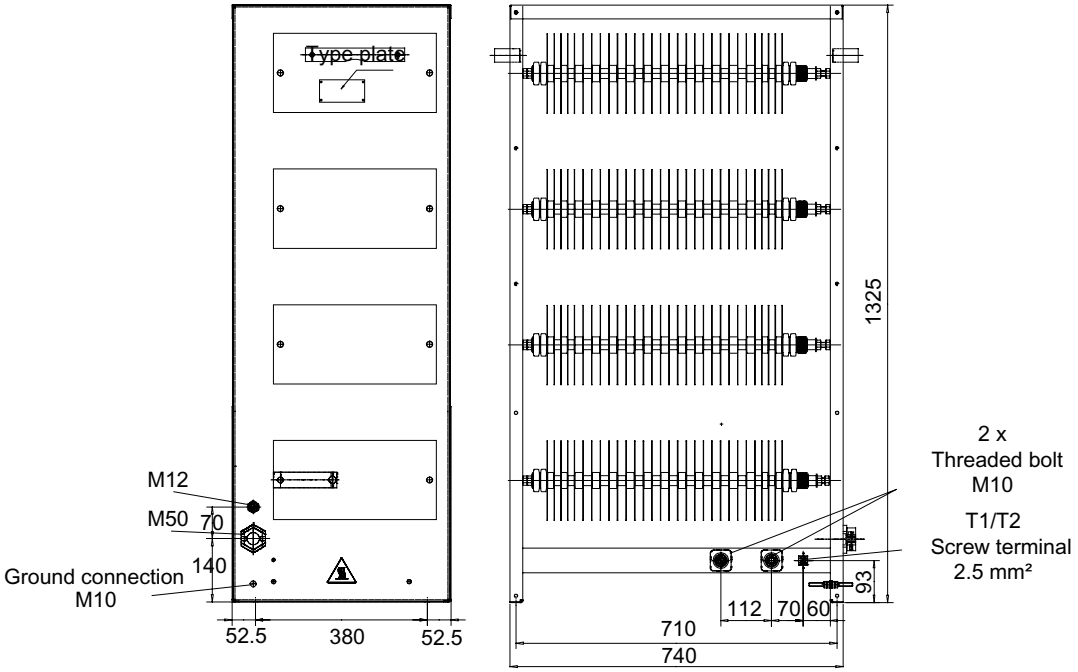

Figure 7-16 Dimensions of the braking resistor FSGX, order-no. 6SL3000-1BE32-5AA0

CAUTION
A ventilation clearance of 200 m must be maintained on all sides of the braking resistor (with ventilation grilles).

The braking resistor FSGX is suitable for thePower Modules with the following order-no.:
6SL3224-0XE41-3UA0
6SL3224-0XE41-6UA0
6SL3224-0XE42-0UA0

The braking resistor should not be installed in the vicinity of the converter. The following points must be taken into account:

- The braking resistors are only suitable for floor mounting.
- The maximum cable length between the Power Module and braking resistor is 100 m.
- The braking resistor must be installed as a free-standing unit.
- Objects must not be placed on or anywhere above the braking resistor.

7.3.2 Connecting the braking resistor

The braking resistor is connected at terminals DCP/R1 and R2.

FSA ... FSF:	The braking resistor can be connected directly to the Power Module.
FSGX:	The connecting of a braking resistor requires the installation of a brake chopper.

On FSA to access the R1/R2- terminals the cutout cover must be removed using a small pair of cutters, ensuring that no plastics from the cutout fall into the inverter housing. On FSB and FSC the R1/R2- terminals are located on the underside at the bottom of the unit (see Figure). The terminal connection consists of up to three spades.

Figure 7-17 PM240 FSA spades

Figure 7-18 PM240 FSB spades

Figure 7-19 PM240 FSC spades

Note

With the cutout cover removed and no connections fitted to the spades, the inverter has only IP00 protection.

7.3.3 Protecting the braking resistor

Protecting the resistance

The braking resistor must be protected against overheating. A thermostatic switch handles the protective function (this is supplied with each break resistor). One of the following two alternatives can be chosen to use this thermostatic switch for protecting the braking resistor:

1. Connect the thermostatic switch to a free digital input of the SINAMICS G120 so that the converter is disconnected from the power supply if the braking resistor overheats. Subsequently the digital input must be used as release for a switch-off with OFF2.

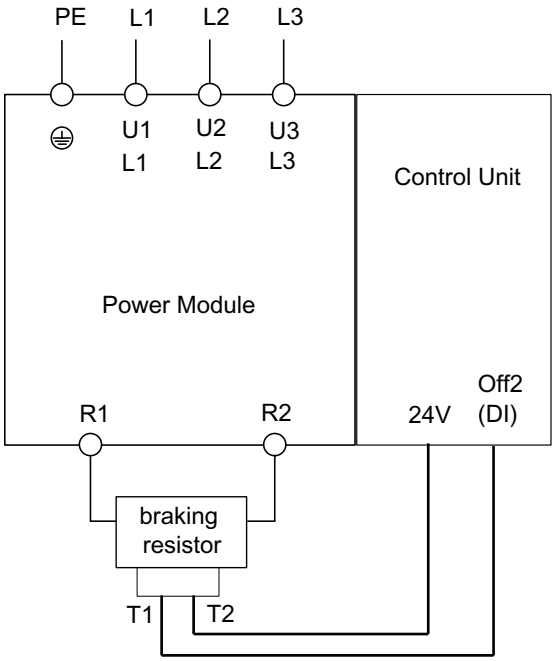

Figure 7-20 Protecting the braking resistor by a OFF2 command

2. Establish the power supply to the Power Module through a contactor which then shuts down the power supply when the resistor overheats. The thermostatic switch is connected in series with the coil feeder cable for the main contactor. The contacts of the thermostatic switch close again as soon as the resistor temperature has fallen below the selected value.

Note

The contactor is not part of the braking resistor option.

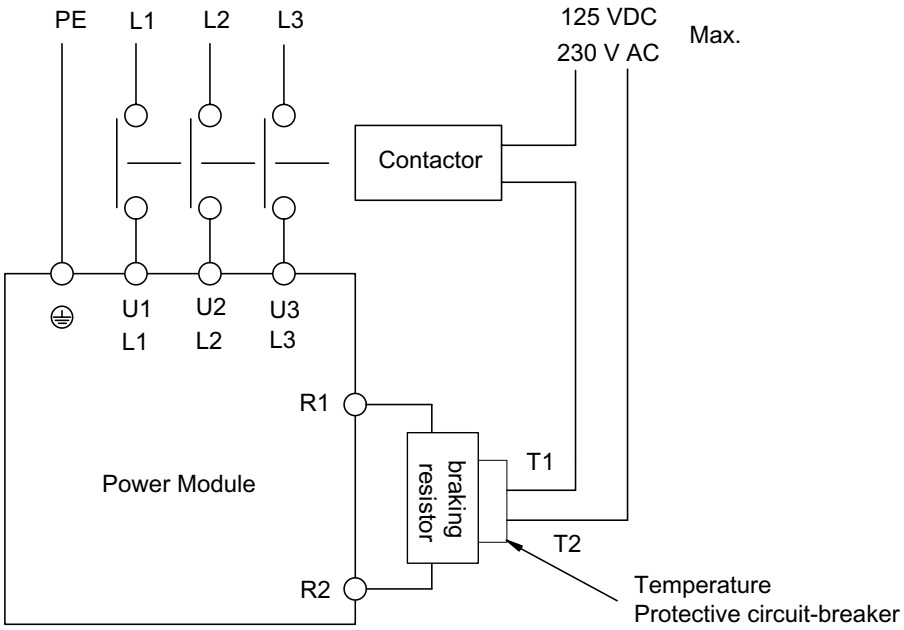

Figure 7-21 Protecting the braking resistor by a circuit breaker

7.3.4 Technical specifications of the braking resistor

Table 7- 26 Technical specifications, braking resistors, Part 1

Resistor for Power Module ...	FSA	FSB	FSC	FSD
Nominal power (HO) of the Power Module	0.37 kW ... 1.5 kW	2.2 kW ... 4 kW	5.5 kW ... 11 kW	15 kW ... 22 kW
Order number	6SE6400-4BD11-0AA0	6SE6400-4BD12-0BA0	6SE6400-4BD16-5CA0	6SE6400-4BD21-2DA0
Resistance	390 Ω	160 Ω	56 Ω	27 Ω
Rated power P_{DB}	0.1 kW	0.2 kW	0.65 kW	1.2 kW
Peak power P_{max}	1.7 kW	4.0 kW	13 kW	24 kW
Degree of protection	IP20 or IPXXB	IP20 or IPXXB	IP20 or IPXXB	IP20 or IPXXB
Power Connections	Cable 3 x 2.5 mm² shielded, length 0.5 m	Cable 3 x 2.5 mm² shielded, length 0.5 m	Cable 3 x 2.5 mm² shielded, length 0.9 m	M6 studs

Resistor for Power Module ...	FSA	FSB	FSC	FSD
Nominal power (HO) of the Power Module	0.37 kW ... 1.5 kW	2.2 kW ... 4 kW	5.5 kW ... 11 kW	15 kW ... 22 kW
Order number	6SE6400-4BD11-0AA0	6SE6400-4BD12-0BA0	6SE6400-4BD16-5CA0	6SE6400-4BD21-2DA0
Thermoswitch (NC contact) maximum contact load connecting cable	250 V_{AC} / 2.5 A	250 V_{AC} / 2.5 A	250 V_{AC} / 2.5 A	250 V_{AC} / 2.5 A
Weight	1.0 kg	1.6 kg	3.8 kg	7.4 kg

Table 7- 27 Technical specifications, braking resistors, Part 2

Resistor for Power Module ...	FSE	FSF		FSGX
Nominal power (HO) of the Power Module	30 kW ... 37 kW	45 kW ... 75 kW	90 kW ... 110 kW	132 kW ... 200 kW
Order number	6SE6400-4BD22-2EA0	6SE6400-4BD24-0FA0	6SE6400-4BD26-0FA0	6SL3000-1BE32-5AA0
Resistance	15 Ω	8.2 Ω	5.5 Ω	2.2 Ω
Rated power P_{DB}	2.2 kW	4.0 kW	6.0 kW	50 kW
Peak power P_{max}	44 kW	80 kW	120 kW	300 kW
Degree of protection	IP20 or IPXXB	IP20 or IPXXB	IP20 or IPXXB	IP20
Power Connections	M6 studs	M6 studs	M6 studs	M10 bolt-type screw terminal
Thermoswitch (NC contact) maximum contact load connecting cable	250 V_{AC} / 2.5 A	250 V_{AC} / 0.2 A	250 V_{AC} / 0.2 A	250 V_{AC} / 10 A
Weight	10.6 kg	16.7 kg	21 kg	120 kg

7.4 Brake Relay

The Brake Relay is designed to provide the interface between the Power Module and the brake solenoid of a motor. There are two types of Brake Relays:

- Brake Relay – this provides the basic braking control function.
- Safe Brake Relay – this provides for the braking control function within a safety integrated system. To adhere to the requirements of a safety integrated system, the Safe Brake Relay has been designed to allow a variable voltage to be given to the Safe Brake Relay to allow the system to determine if the Safe Brake Relay is functioning correctly without actually activating the braking function.

7.4.1 Mounting the Brake Relay

Mounting the Brake Relay on Power Module FSA … FSF

The Brake Relay can be panel mounted, wall mounted or mounted on the screen termination kit.

For more information see http://support.automation.siemens.com/WW/view/en/23623179

Mounting the Brake Relay on Power Module FSGX

The Brake Relay has to be mounted on the bracket above the Control Unit.

1. Mount the Brake Relay to the Control Unit bracket.
2. Connect the Brake Relay and the Power Module via the flying lead.
3. Connect the Brake Relay to the brake coil of the motor brake.

Note

The Safe Brake Relay requires an external 24V power supply.

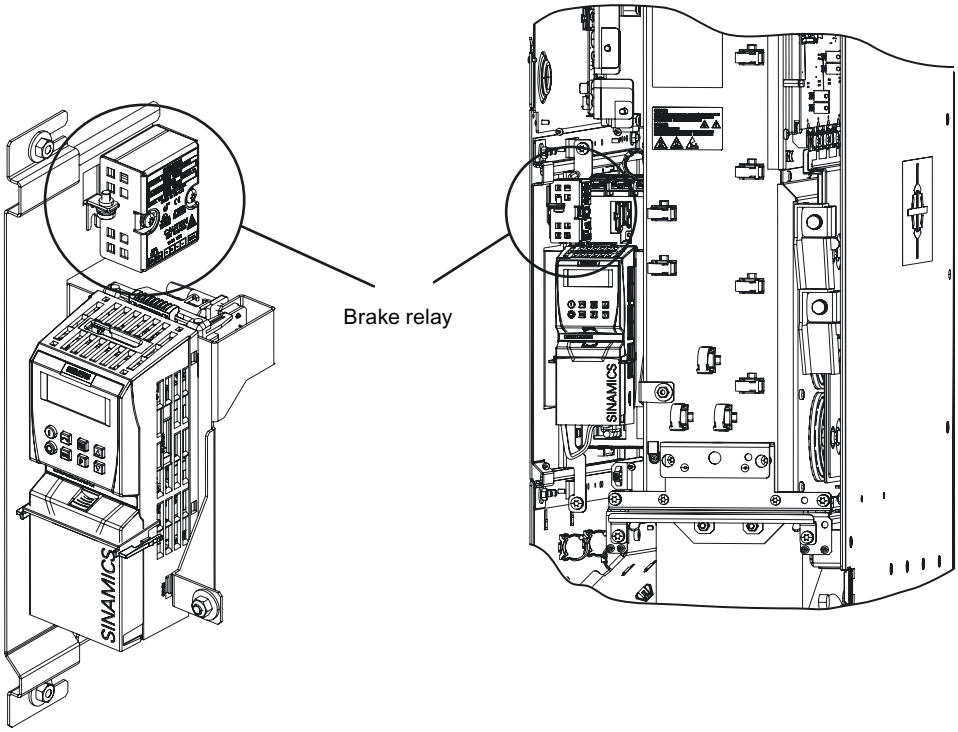

Figure 7-22 Mounting the Brake Relay on Power Module FSGX

7.4.2 Connecting the Brake Relay

Connecting the Brake Relay to the Power Module

Connect one end of the cable form to the Brake Relay.
Two cable form with different lengths are provided with the Brake Relay. Choice the adequate length of the cable depending on the frame size of the Power Module and on the mounting location of the Brake Relay.

Brake Relay	Safe Brake Relay
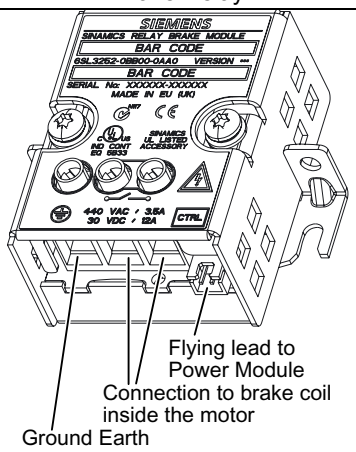	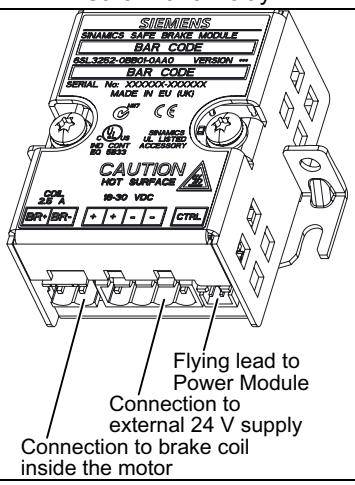
The Brake Relay control connector is marked as "CTRL"	

Connect the other end of the cable form to the Power Module

FSA … FSC 0.37 kW … 15 kW	FSD … FSF 18.5 kW … 110 kW	FSGX 132 kW … 200 kW
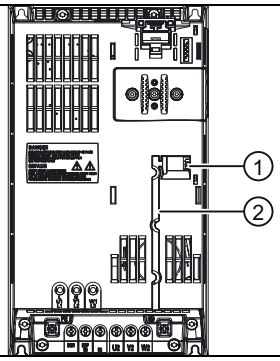	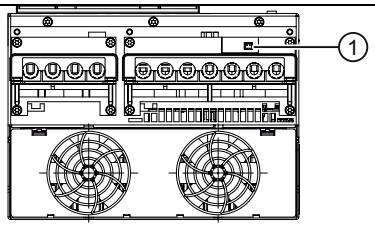	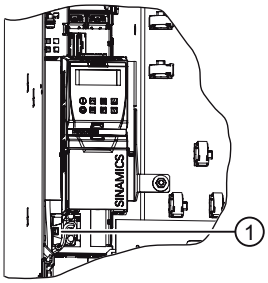
The Brake Relay control connector ① is on the front of the Power Module. The Power Module provides a cable duct ② for the control cable	The Brake Relay control connector ① is on the bottom of the Power Module	The Brake Relay control connector ① is below the Control Unit and marked as -X47

Connecting the Brake Relay to the motor brake

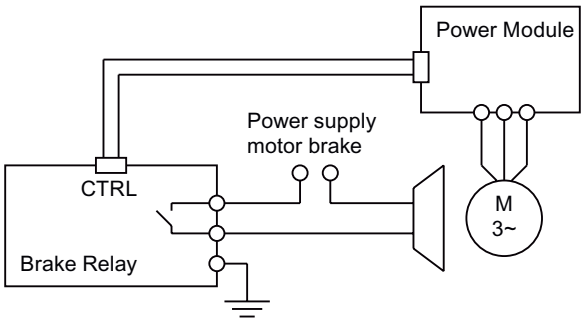

Figure 7-23 Brake Relay connection

The Brake Relay has to be connected to protective earth, if the motor brake is supplied by a PELV circuit.

Connecting the Safe Brake Relay to the motor brake

The Safe Brake Relay can only control motor brakes with 24V power supply.

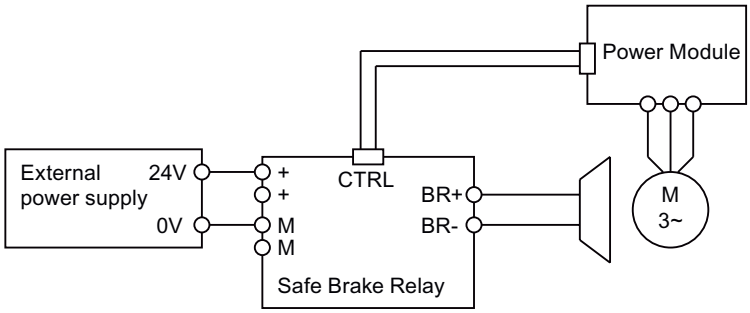

Figure 7-24 Safe Brake Relay connection

7.4.3 Technical specifications of the Brake Relay

Brake Relay specifications

	Brake Relay	Safe Brake Relay
Input voltage	connected to the internal power supply of the Power Module	DC 20.4 ... 28.8 V 1)
Input current		Max. 2.5 A
Max. conductor cross-section	2.5 mm²	2.5 mm²
Degree of protection	IP20	IP20
Switching capacity of the NO contact	1 AC 440 V, 3.5 A 1 DC 30 V DC, 12 A	-
Output voltage	-	24 V
Output current	-	max. 2 A
1) External controlled power supply is necessary. Recommended voltage: DC 26 V		

7.5 DIN rail mounting kit

Function

The DIN rail mounting kit (DRMK) is designed to allow the SINAMICS G120 FSA and FSB inverters to be mounted on a pair of parallel DIN rails.

The DRMK provides an integrated screening plate to allow for the termination of the screened motor cables and other screened cable used with the inverter.

The DRMK for FSA allows for the mounting of either the inverter as a stand-alone or with the inverter and the footprint filter. The FSB inverters, due to their physical size and weight can only be mounted as stand-alone inverters.

The required DIN rail pitch for frame size FSA and FSB is 115 (± 1) mm.

Mounting the DRMK

The mounting description of the DRMK is available in the internet:
http://support.automation.siemens.com/WW/view/en/23622394

7.6 Screen termination kit

Function of the screen termination kit

The screen termination kit has been designed to allow the termination of control, mains and power cables to ensure the correct electrical grounding to the inverter.

For FSA the screen termination kit provides for the termination of 3 screened cables.

For FSB and larger the screen termination kits provides for the termination of at least 4 screened cables.

Mounting the screen termination kit

The mounting description of the screen termination kit is available in the internet:
http://support.automation.siemens.com/WW/view/en/23621093

Appendix

A

A.1 Electromagnetic Compatibility

Electromagnetic compatibility

All manufacturers/assemblers of electrical apparatus which "performs a complete intrinsic function and is placed on the market as a single unit intended for the end user" must comply with the EMC directive EC/89/336.

There are three routes for the manufacturer/assembler to demonstrate compliance:

Self-certification

This is a manufacturer's declaration that the European standards applicable to the electrical environment for which the apparatus is intended have been met. Only standards that have been officially published in the Official Journal of the European Community can be cited in the manufacturer's declaration.

Technical construction file

A technical construction file can be prepared for the apparatus describing its EMC characteristics. This file must be approved by a ‘Competent Body’ appointed by the appropriate European government organization. This approach allows the use of standards that are still in preparation.

EMC Standards

The SINAMICS G120 drives have been tested in accordance with the EMC Product Standard EN 61800-3:2004.

A.2 Definition of the EMC Environment and Categories

Classification of EMC performance

The EMC environment and categories are defined within the EMC Product Standard EN 61800-3, as follows:

First Environment

An environment that includes domestic premises and establishments that are connected directly to a public low-voltage power supply network without the use of an intermediate transformer.

Note

For example: houses, apartments, commercial premises or offices in a residential building.

Second Environment

An environment that includes industrial premises and establishments that are not connected directly to a public low-voltage power supply network.

Note

For example: industrial and technical areas of buildings fed from a dedicated transformer.

Category C1

Power Drive System (PDS) of rated voltage less than 1000 V intended for use in the First (Domestic) Environment.

Category C2

Power Drive System (PDS) of rated voltage less than 1000 V, which is neither a plug in device nor a movable device, and when used in the First (Domestic) Environment, is only intended to be installed and commissioned by a professional.

Note

A professional is a person or an organization having necessary skills in installing and/or commissioning a Power Drive System (PDS), including their EMC aspects.

Category C3

Power Drive System (PDS) of rated voltage less than 1000 V intended for use in the Second (Industrial) Environment and not intended for use within the First (Domestic) Environment.

Table A- 1 Compliance Table

Model	Remarks
Category C1 - First Environment	
--	The inverters are not intended for use within the Category C1 Environment.
Category C2 - First Environment - Professional Use	
Filtered Variants	6SL3224-0BE**-*A*0 (integrated class A filter)
	Class A: 25 m screened cable type CY
	All units (except FSA) with integrated filter. The FSA Power Module requires either a footprint filter option (6SE6400-2FA00-6AD0) or additional power-line filtering at the "system level".
	When used in the First (Domestic) Environment this product may cause radio interference in which case mitigation measures may be required. Units installed within the Cateogry C2 (Domestic) Environment require supply authority acceptance for connection to the puplic low-voltage power supply network. Please contact your local supply network provider.
Category C3 - Second Environment	
Unfiltered Variants	6SL3224-0BE**-*U*0
	The use of unfiltered drives within an industrial installation is only possible if it forms part of a system which includes additional power-line filtering at the "system level" or, alternatively, the use of filtered variants.

Note

All drives should be installed and commissioned in accordance with the manufacturer’s guidelines and in accordance with good EMC practices.

For further information refer to SIEMENS application note "EMC Design Guidelines".

A.3 EMC Overall Performance

EMC Emissions

The SINAMICS G120 drives have been tested in accordance with the emission requirements of the category C2 (domestic) environment.

Table A- 2 Conducted & Radiated Emissions

EMC Phenomenon	Standard	Level
Conducted Emissions	EN 55011	Class A
Radiated Emissions	EN 55011	Class A

Note

To achieve this performance the default switching frequency should not be exceeded.

In order to achieve conducted emissions to EN 55011 Class B there is a range of PM240 external filter options available.

Achieving radiated emissions to EN 55011 Class B is largely dependent on the drive being correctly installed inside a metallic enclosure. The limits will not be met if the drive is not enclosed or installed in accordance with good EMC practices.

Harmonic Currents

The harmonic current emissions from the SINAMICS G120 drives is as follows:

Table A- 3 Harmonic Currents

Rating	Typical Harmonic Current (% of rated input current)							
	5th	7th	11th	13th	17th	19th	23rd	25th
FSA … FSGX (400 V, 370 W … 200 kW)	73	52	25	23	22	15	12	10

Note

Units installed within the category C2 (domestic) environment require connection to the public low-voltage power supply network. Please contact your local supply network provider.

Units installed within the category C3 (industrial) environment do not require connection approval.

EMC Immunity

The SINAMICS G120 drives have been tested in accordance with the immunity requirements of category C3 (industrial) environment:

Table A- 4 EMC Immunity

EMC Phenomenon	Standard	Level	Performance Criterion
Electrostatic Discharge (ESD)	EN 61000-4-2	4 kV Contact discharge	A
		8 kV Air discharge	
Radio-frequency Electromagnetic Field	EN 61000-4-3	80 MHz … 1000 MHz 10 V/m	A
Amplitude modulated		80% AM at 1 kHz	
Fast Transient Bursts	EN 61000-4-4	2 kV @ 5 kHz	A
Surge Voltage	EN 61000-4-5	1 kV differential (L-L)	A
1.2/50 µs		2 kV common (L-E)	
Conducted	EN 61000-4-6	0.15 MHz … 80 MHz 10 V/rms	A
Radio-frequency Common Mode		80% AM at 1 kHz	
Mains Interruptions & Voltage Dips	EN 61000-4-11	100% dip for 3 ms	A
		30% dip for 10 ms	B
		60% dip for 100 ms	C
		95% dip for 5000 ms	D
Voltage Distortion	EN 61000-2-4 Class 3	10% THD	A
Voltage Unbalance	EN 61000-2-4 Class 3	3% Negative Phase Sequence	A
Frequency Variation	EN 61000-2-4 Class 3	Nominal 50 Hz or 60 Hz (± 4%)	A
Commutation Notches	EN 60146-1-1 Class B	Depth = 40%	A
		Area = 250% x degrees	

Note

The immunity requirements apply equally to both filtered and unfiltered units.

A.4 Standards

CE	**European Low Voltage Directive** The SINAMICS G120 product range complies with the requirements of the Low Voltage Directive 2006/95/EC. The units are certified for complaince with the following standards: EN 61800-5-1 — Semiconductor inverters –General requirements and line commutated inverters EN 60204-1 — Safety of machinery –Electrical equipment of machines
	European Machinery Directive The SINAMICS G120 inverter series does not fall under the scope of the Machinery Directive. However, the products have been fully evaluated for compliance with the essential Health & Safety requirements of the directive when used in a typical machine application. A Declaration of Incorporation is available on request.
	European EMC Directive When installed according to the recommendations described in this manual, the SINAMICS G120 fulfils all requirements of the EMC Directive as defined by the EMC Product Standard for Power Drive Systems EN 61800-3
c UL US LISTED	**Underwriters Laboratories** UL and CUL LISTED POWER CONVERSION EQUIPMENT for use in a pollution degree 2 environment. The Power Module FSGX did not fulfill the UL standard at print date. The latest information regarding the Power Module is published under http://support.automation.siemens.com/WW/view/de/30563173/133400
SEMI F47	**Specification for Semiconductor Process Equipment Voltage Sag Immunity** SINAMICS G120 Power Modules PM240 fulfill the requirements of the SEMI F47-0706 standard.
	ISO 9001 Siemens plc operates a quality management system, which complies with the requirements of ISO 9001.

Certificates can be downloaded from the internet under the following link:
http://support.automation.siemens.com/WW/view/en/22339653/134200

A.5 Abbreviations

Abbreviation	State
AC	Alternating Current
CE	Communauté Européenne
CU	Control Unit
DC	Direct current
DI	Digital input
DIP	DIP switch
DO	Digital output
ECD	Equivalent circuit diagram
EEC	European Economic Community
ELCB	Earth leakage circuit breaker
EMC	Electromagnetic compatibility
EMI	Electromagnetic interference
FSA	Frame size A
FSB	Frame size B
FSC	Frame size C
FSD	Frame size D
FSE	Frame size E
FSF	Frame size F
FSGX	Frame size GX
GSG	Getting Started Guide
HO	High Overload (Constant Torque)
I/O	In-/output
IGBT	Insulated gate bipolar transistor
LED	Light emitting diode
LO	Light Overload (Variable Torque)
NC	Normally closed
NEMA	National Electrical Manufacturers Association
NO	Normally open
OPI	Operating Instructions
PELV	Protection by extra low voltage
PM	Power Module
PPE	Personal protective equipment
RCCB	Residual current circuit breaker
RCD	Residual current device
RFI	Radio frequency interference
SELV	Safety extra low voltage
VT	Variable torque

Index

A

Accessing the power and motor terminals, 41
Air barrier, 20
Air cooling requirements, 21
Air flow, 20
Air short circuit, 20

B

Base components, 78
Block diagram, 9, 10
Brake chopper
    installation, 101
    Threshold switch, 104
    X21 Terminal block, 104
Brake Relay, 116
    Installing, 116
    Technical specifications, 119
Braking resistor, 105

C

Cable cross section, 39
Cable length, 39
Category C1, 124
Category C2, 39, 124, 126
Category C3, 125
Circuit breaker, 39
Class A, 126
Class A filter, 125
Class B, 126
Classification of EMC performance, 124
Control Unit
    Adapting the front cover, FSGX, 34
    Fitting to the Power Module, 32
    Fitting to the Power Module FSGX, 33
    Front cover FSGX, 34
    Release button, 32, 33
Cooling, 20
Current reduction, 66

D

Dimension drawings, 22
DIN rail mounting kit, 121
Drill pattern, 22

E

Earth cable, 40
Electrical installation, 16, 35
Electromagnetic compatibility, 123
Electromagnetic Interference (EMI), 48
EMC Emissions, 126
EMC Standards, 123
European EMC Directive, 128
European Low Voltage Directive, 128
European Machinery Directive, 128
External line filter, 126

F

Fan supply voltage, 46
Fan transformer, 46
First Environment, 124

G

General rules for the environmental protection, 19
Grounding, 40

H

Harmonic Currents, 126
High Overload (HO) input currents, 68

I

Input Currents
    High Overload, 68
    Light Overload, 68
IP20 protection, 19, 34
IPXXB protection, 19, 34
ISO 9001, 128
IT, 36

L

Leakage current, 16, 35

Light Overload (HO) input currents, 68
Line contactor, 47
Line filter
  Installing, 76, 78, 84
  Technical specifications, 86
Line reactor
  Installing, 76, 78
  Technical specifications, 80

M

Maintenance
  Cleaning, 51
  Contamination, 51
  Dirt, 51
  Terminals, 51
  Ventilation, 51
Mechanical installation, 16
Minimum distance
  above, 22
  below, 22
  front, 22
  side by side, 22

O

Operating temperature, 67
Operation with Residual Current Devices (RCD), 38
Operation with screened cables, 39
Operation with ungrounded supplies, 37
Operation with unscreened cables, 39
Operational altitude, 68
Output reactor, 39
  Installing, 76, 78, 88
  Technical specifications, 89

P

Personal protective equipment, 19
Power and motor terminal layout, 43
Power Distribution Systems, 36
Power Drive System (PDS), 124, 125
Power losses, 20, 21
Power Modules
  Dimension drawings, 22
  Overview, 8
  Specifications, 68
  Technical specifications, 65
PPE, 19
Pulse frequency, 66

R

Removing the front cover, 33

S

Safe Brake Relay, 116
Safety notes
  Commissioning, 15
  Dismantling and disposal, 18
  Electrical installation, 16, 35
  General Warnings, Cautions and Notices, 14
  Mechanical installation, 16
  Operation, 17
  Repair, 18
  Safety Instructions, 13
  Transport and storage, 15
Screen termination kit, 122
Screened cable, 125
Screened cables, 39
Screening methods, 48
Screening without a Screen Termination Kit, 48
Second Environment, 124
Self certification, 123
Service life of the fan, 52
Signal connections, 45, 47
SINAMICS G120 range, 7
Sine-wave filter, 39
  Installing, 76, 78, 94
  Technical specifications, 95
Spare parts, 52
Standards, 128
  2006/95/EC, 128
  EC/89/336, 123
  EN 55011, 126
  EN 60146-1-1, 127
  EN 60204-1, 128
  EN 60950, 36
  EN 61000-2-4, 127
  EN 61000-4-11, 127
  EN 61000-4-2, 127
  EN 61000-4-3, 127
  EN 61000-4-4, 127
  EN 61000-4-5, 127
  EN 61000-4-6, 127
  EN 61140, 36
  EN 61800-3, 124
  EN 61800-3, 128
  EN 61800-3:2004, 123
  EN 61800-5-1, 128
  ISO 9001, 128
  SEMI F47-0706, 128

T

Technical construction file, 123
Technical specifications
    Brake Relay, 119
    Braking resistor, 114
    Line filter, 86
    Line reactor, 80
    Output reactor, 89
    Power Module, 65
    Sine-wave filter, 95
Temperature rise, 20
Terminal cover, 41
Tightening torque, 22, 43
TN-C, 36
TN-C-S, 36
TN-S, 36
TT, 36

U

UL certified Fuses, 69
Underwriters Laboratories, 128
Unscreened cables, 39

X

X21 Terminal block, 104
X47 connector, 118
X9 Terminal block, 45, 47

Siemens AG
Industry Sector
Drive Technologies
Standard Drives
Postfach 3180
91050 ERLANGEN
GERMANY

www.siemens.com/sinamics-g120

Subject to change without notice
© Siemens AG 2009