SK+/SPK+ –
Space-saving right-angle precision with output shaft

The representatives of our versatile hypoid gearhead with SP+ compatible output shaft. SPK+ gearheads with planetary stage are especially suitable for high-precision applications requiring higher power and torsional rigidity.

Quick size selection

SK+ MF (example for i = 5)
For applications in cyclic operation (DC ≤ 60%)
or continuous operation (DC ≥ 60%)

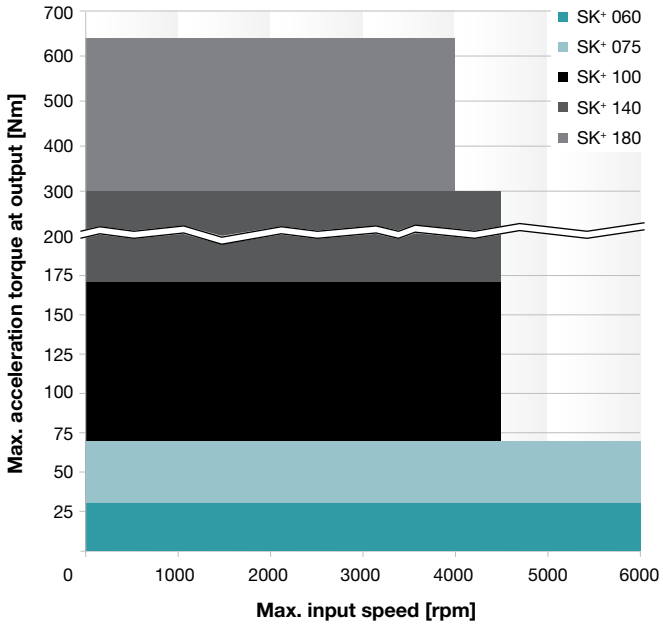

SPK+ MF (example for i = 25)
For applications in cyclic operation (DC ≤ 60%)
or continuous operation (DC ≥ 60%)

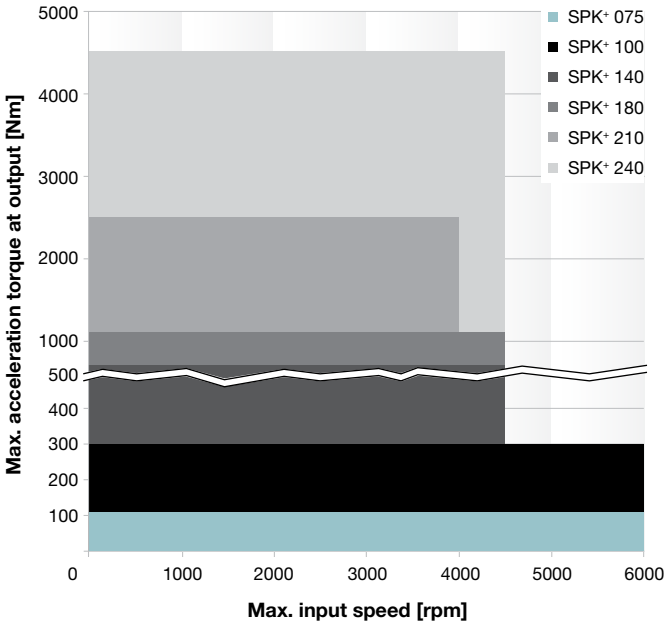

Versions and Applications

Features	**SK+** MF version page 204	**SPK+** MF version page 214
Power density	• •	• •
Positioning accuracy (e.g clamped drives)	• •	• • •
Highly dynamic applications	• •	• •
Torsional rigidity	• •	• •

Product features

Ratios [c]		3 – 100	12 – 10000
Torsional backlash [arcmin] [c]	Standard	≤ 4	≤ 4
	Reduced	–	≤ 2
Output type			
Smooth output shaft		•	•
Smooth output shaft, rear side		•	•
Keywayed output shaft		•	•
Keywayed output shaft, rear side		•	•
Output shaft with involute gearing		•	•
Hollow shaft interface, rear side Connected via shrink disc		•	•
Mounted shaft Connected via shrink disc			•
Closed cover, rear side		•	•
Input type			
Motor mounted version		•	•
Type			
ATEX [a]		•	
Food-grade lubrication [a] [b]		•	•
Corrosion resistant [a] [b]		•	•
Accessories			
Coupling		•	•
Rack		•	•
Pinion		•	•
Shrink disc		•	•
torqXis sensor flange		•	•
Intermediate plate for cooling connection		•	•

[a] Power reduction: technical data available upon request [b] Please contact WITTENSTEIN alpha [c] In relation to reference sizes

SK+ 060 MF 1/2-stage

				1-stage					2-stage									
Ratio [a]			***i***	**3**	**4**	**5**	**7**	**10**	**12**	**16**	**20**	**25**	**28**	**35**	**40**	**50**	**70**	**100**
Max. acceleration torque (max. 1000 cycles per hour)			T_{2B}	Nm	30	30	30	25	20	30	30	30	30	30	30	30	30	25	20
				in.lb	266	266	266	221	177	266	266	266	266	266	266	266	266	221	177
Nominal output torque (with n_{1N})			T_{2N}	Nm	22	22	22	20	15	22	22	22	22	22	22	22	22	20	15
				in.lb	195	195	195	177	133	195	195	195	195	195	195	195	195	177	133
Emergency stop torque (permitted 1000 times during the service life of the gearhead)			T_{2Not}	Nm	40	50	50	45	40	50	50	50	50	50	50	50	50	45	40
				in.lb	354	443	443	398	354	443	443	443	443	443	443	443	443	398	354
Nominal input speed (with T_{2N} and 20°C ambient temperature) [b), c)]			n_{1N}	rpm	2500	2700	3000	3000	3000	4400	4400	4400	4400	4400	4400	4400	4800	5500	5500
Max. continuous speed (with 20% T_{2N} and 20°C ambient temperature)			n_{1Ncym}	rpm	3000	3500	4000	3500	3500	5000	5000	5000	5000	5000	5000	5000	5000	5500	5500
Max. input speed			n_{1Max}	rpm	6000	6000	6000	6000	6000	6000	6000	6000	6000	6000	6000	6000	6000	6000	6000
Mean no load running torque (with n_1 = 3000 rpm and 20°C gearhead temperature) [d)]			T_{012}	Nm	1.2	1.1	1.0	1.2	1.1	0.2	0.2	0.2	0.2	0.2	0.2	0.1	0.1	0.1	0.1
				in.lb	10.6	9.7	8.9	10.6	9.7	1.8	1.8	1.8	1.8	1.8	1.8	0.9	0.9	0.9	0.9
Max. torsional backlash			j_t	arcmin	≤ 5														
Torsional rigidity			C_{t21}	Nm/ arcmin	2.0	2.1	2.2	2.0	1.8	2.1	2.1	2.1	2.1	2.1	2.1	2.1	2.2	2.0	1.8
				in.lb/ arcmin	18	19	19	18	16	19	19	19	19	19	19	19	19	18	16
Max. axial force [e)]			F_{2AMax}	N	2400														
				lb_f	540														
Max. radial force [e)]			F_{2RMax}	N	2700														
				lb_f	608														
Max. tilting moment			M_{2KMax}	Nm	251														
				in.lb	2220														
Efficiency at full load			η	%	96					94									
Service life (For calculation, see the Chapter "Information")			L_h	h	> 20000														
Weight incl. standard adapter plate			m	kg	2.9					3.2									
				lb_m	6.4					7.1									
Operating noise (with n_1 = 3000 rpm no load)			L_{PA}	dB(A)	≤ 64														
Max. permitted housing temperature				°C	+90														
				F	194														
Ambient temperature				°C	0 to +40														
				F	32 to 104														
Lubrication					Lubricated for life														
Paint					Blue RAL 5002														
Direction of rotation					Motor and gearhead opposite directions														
Protection class					IP 65														
Moment of inertia (relates to the drive) Clamping hub diameter [mm]	B	11	J_1	kgcm²	–	–	–	–	–	0.09	0.09	0.07	0.07	0.06	0.06	0.06	0.06	0.06	0.06
				10^{-3} in.lb.s²						0.08	0.08	0.07	0.06	0.06	0.06	0.05	0.05	0.05	0.05
	C	14	J_1	kgcm²	0.52	0.44	0.40	0.36	0.34	0.20	0.20	0.19	0.19	0.18	0.18	0.17	0.17	0.17	0.17
				10^{-3} in.lb.s²	0.46	0.39	0.35	0.32	0.30	0.18	0.18	0.17	0.16	0.16	0.16	0.15	0.15	0.15	0.15
	E	19	J_1	kgcm²	0.87	0.79	0.75	0.71	0.70	–	–	–	–	–	–	–	–	–	–
				10^{-3} in.lb.s²	0.77	0.70	0.66	0.63	0.62										

Please contact us for information on the best configuration for S1 conditions of use (continuous operation).

[a)] Other ratios available on request
[b)] Higher speeds are possible if the nominal torque is reduced
[c)] For higher ambient temperatures, please reduce input speed
[d)] Idling torques decrease during operation
[e)] Refers to center of the output shaft or flange

All technical data for front output side applies.
Technical data for rearward output versions, see page 422.

View A

1-stage:

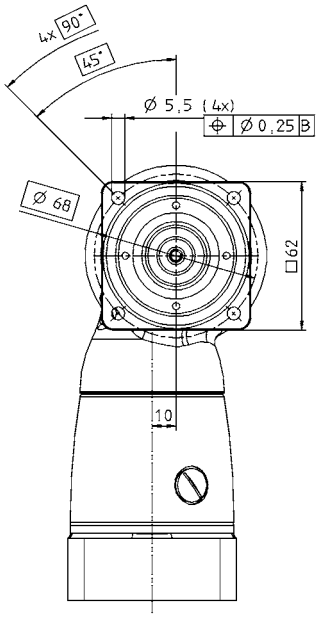

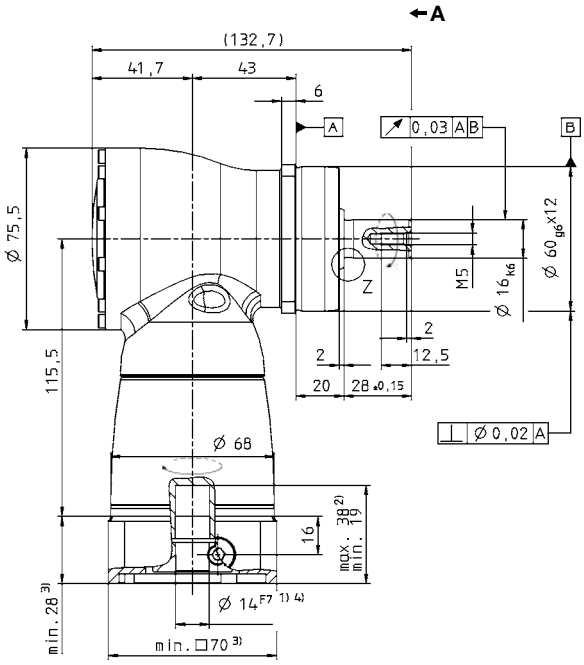

2-stage:

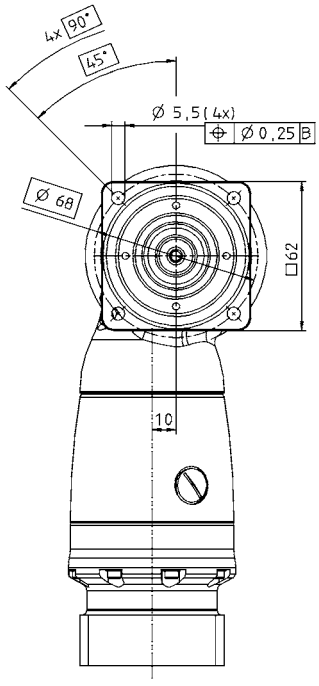

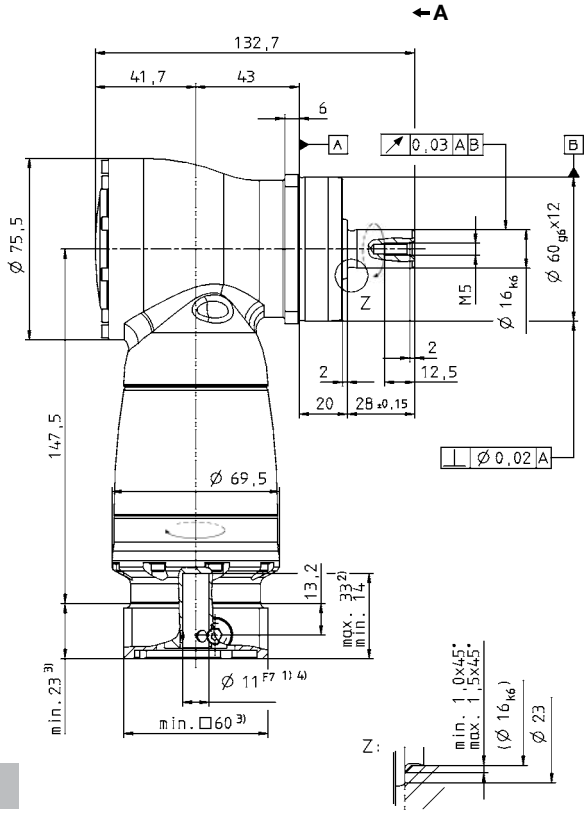

Alternatives: Output shaft variants

Keywayed output shaft in mm

E = key as per DIN 6885, sheet 1, form A

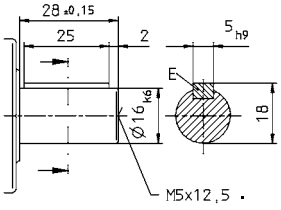

Involute gearing DIN 5480

X = W 16 x 0,8 x 30 x 18 x 6m, DIN 5480

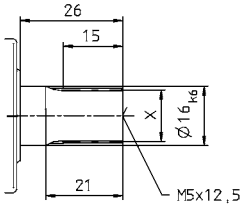

See technical data sheet for available clamping hub diameters (mass moment of inertia). Dimensions available on request.

Non-tolerated dimensions ±1 mm

1) Check motor shaft fit.
2) Min./Max. permissible motor shaft length. Longer motor shafts are adaptable, please contact us.
3) The dimensions depend on the motor.
4) Smaller motor shaft diameter is compensated by a bushing with a minimum thickness of 1 mm.

CAD data is available under
http://www.wittenstein-alpha.de/en/info-and-cad-finder.html

Motor mounting according to operating manual

SK+ 075 MF 1/2-stage

			1-stage					2-stage									
Ratio [a]	i		**3**	**4**	**5**	**7**	**10**	**12**	**16**	**20**	**25**	**28**	**35**	**40**	**50**	**70**	**100**
Max. acceleration torque (max. 1000 cycles per hour)	T_{2B}	Nm	70	70	70	60	50	70	70	70	70	70	70	70	70	60	50
		in.lb	620	620	620	531	443	620	620	620	620	620	620	620	620	531	443
Nominal output torque (with n_{1N})	T_{2N}	Nm	50	50	50	45	40	50	50	50	50	50	50	50	50	45	40
		in.lb	443	443	443	398	354	443	443	443	443	443	443	443	443	398	354
Emergency stop torque (permitted 1000 times during the service life of the gearhead)	T_{2Not}	Nm	95	115	115	110	100	115	115	115	115	115	115	115	115	110	100
		in.lb	841	1018	1018	974	885	1018	1018	1018	1018	1018	1018	1018	1018	974	885
Nominal input speed (with T_{2N} and 20°C ambient temperature) [b), c)]	n_{1N}	rpm	2300	2500	2800	2800	2800	3500	3500	3500	3500	3500	3500	3500	3800	4500	4500
Max. continuous speed (with 20% T_{2N} and 20°C ambient temperature)	n_{1Ncym}	rpm	3000	3500	4000	3500	3500	4500	4500	4500	4500	4500	4500	4500	4500	4500	4500
Max. input speed	n_{1Max}	rpm	6000	6000	6000	6000	6000	6000	6000	6000	6000	6000	6000	6000	6000	6000	6000
Mean no load running torque (with n_1 = 3000 rpm and 20°C gearhead temperature) [d)]	T_{012}	Nm	2.0	1.7	1.5	2.0	1.8	0.3	0.3	0.2	0.2	0.2	0.2	0.1	0.1	0.1	0.1
		in.lb	18	15	13	18	16	2.7	2.7	1.8	1.8	1.8	1.8	0.9	0.9	0.9	0.9
Max. torsional backlash	j_t	arcmin	≤ 4														
Torsional rigidity	C_{t21}	Nm/ arcmin	5.0	5.5	6.0	6.0	6.0	5.5	5.5	5.5	5.5	5.5	5.5	5.5	6.0	6.0	6.0
		in.lb/ arcmin	44	49	53	53	53	49	49	49	49	49	49	49	53	53	53
Max. axial force [e)]	F_{2AMax}	N	3400														
		lb_f	765														
Max. radial force [e)]	F_{2RMax}	N	4000														
		lb_f	900														
Max. tilting moment	M_{2KMax}	Nm	437														
		in.lb	3867														
Efficiency at full load	η	%	96					94									
Service life (For calculation, see the Chapter "Information")	L_h	h	> 20000														
Weight incl. standard adapter plate	m	kg	4.8					5.4									
		lb_m	10.6					11.9									
Operating noise (with n_1 = 3000 rpm no load)	L_{PA}	dB(A)	≤ 66														
Max. permitted housing temperature		°C	+90														
		F	194														
Ambient temperature		°C	0 to +40														
		F	32 to 104														
Lubrication			Lubricated for life														
Paint			Blue RAL 5002														
Direction of rotation			Motor and gearhead opposite directions														
Protection class			IP 65														
Moment of inertia (relates to the drive) Clamping hub diameter [mm] — C 14	J_1	kgcm²	–	–	–	–	–	0.28	0.27	0.23	0.23	0.20	0.20	0.18	0.18	0.18	0.18
		10^{-3} in.lb.s²						0.25	0.24	0.21	0.20	0.18	0.18	0.16	0.16	0.16	0.16
E 19	J_1	kgcm²	1.46	1.19	1.06	0.95	0.90	0.73	0.71	0.68	0.67	0.63	0.62	0.63	0.63	0.63	0.63
		10^{-3} in.lb.s²	1.29	1.05	0.94	0.84	0.79	0.64	0.63	0.60	0.59	0.55	0.55	0.56	0.55	0.55	0.55
H 28	J_1	kgcm²	2.88	2.61	2.47	2.37	2.31	–	–	–	–	–	–	–	–	–	–
		10^{-3} in.lb.s²	2.55	2.31	2.19	2.10	2.04										

Please contact us for information on the best configuration for S1 conditions of use (continuous operation).

[a] Other ratios available on request
[b] Higher speeds are possible if the nominal torque is reduced
[c] For higher ambient temperatures, please reduce input speed
[d] Idling torques decrease during operation
[e] Refers to center of the output shaft or flange

All technical data for front output side applies.
Technical data for rearward output versions, see page 422.

View A

1-stage:

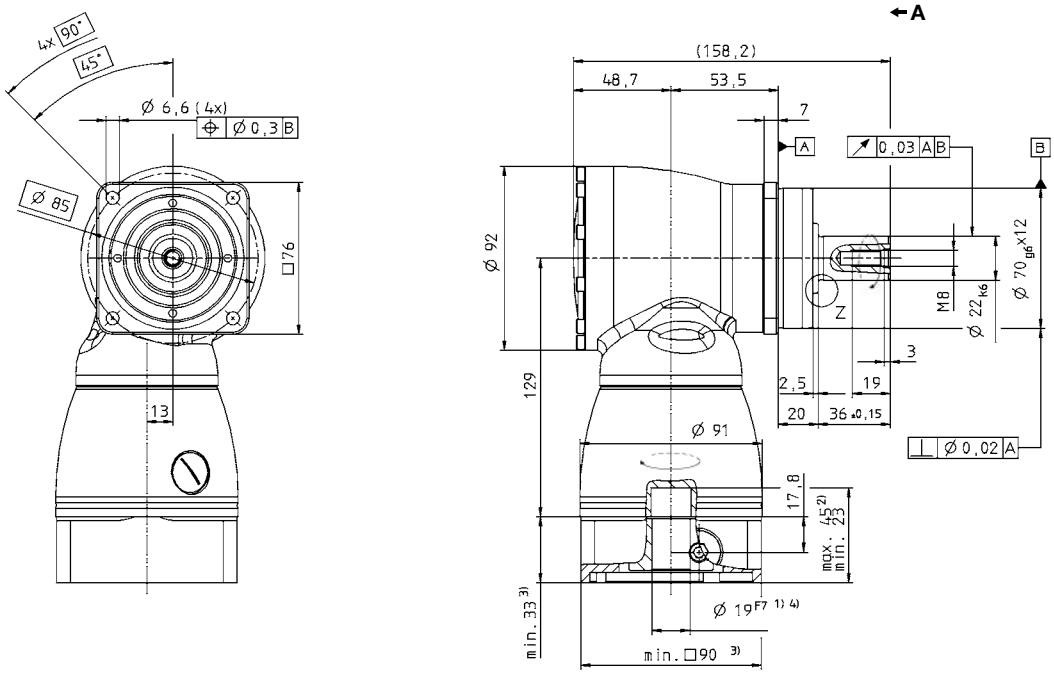

2-stage:

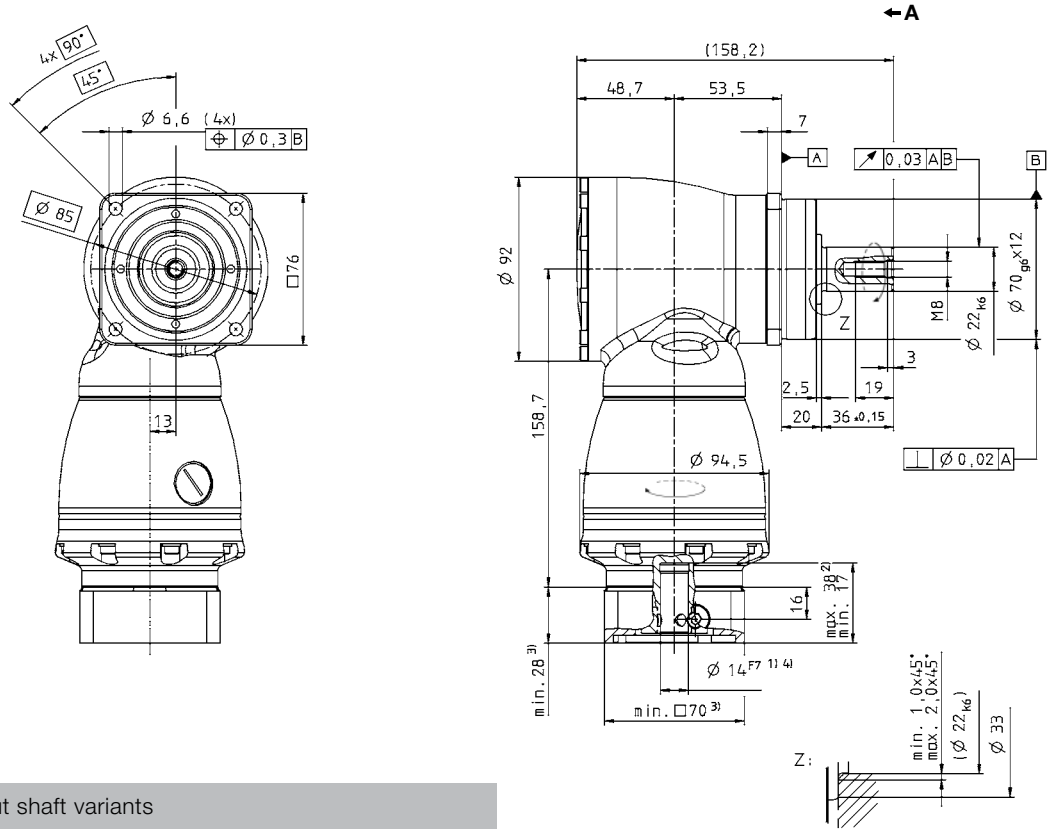

Alternatives: Output shaft variants

Keywayed output shaft in mm

E = key as per DIN 6885, sheet 1, form A

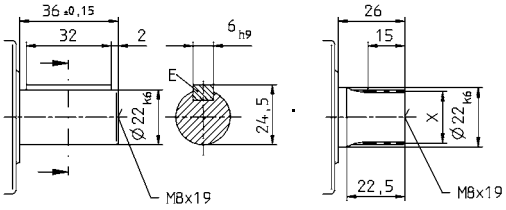

Involute gearing DIN 5480 in mm

X = W 22 x 1.25 x 30 x 16 x 6m

See technical data sheet for available clamping hub diameters (mass moment of inertia). Dimensions available on request.

Non-tolerated dimensions ±1 mm

1) Check motor shaft fit.
2) Min./Max. permissible motor shaft length. Longer motor shafts are adaptable, please contact us.
3) The dimensions depend on the motor.
4) Smaller motor shaft diameter is compensated by a bushing with a minimum thickness of 1 mm.

CAD data is available under
http://www.wittenstein-alpha.de/en/info-and-cad-finder.html

Motor mounting according to operating manual

SK+ 100 MF 1/2-stage

			1-stage					2-stage									
Ratio [a]	i		**3**	**4**	**5**	**7**	**10**	**12**	**16**	**20**	**25**	**28**	**35**	**40**	**50**	**70**	**100**
Max. acceleration torque (max. 1000 cycles per hour)	T_{2B}	Nm	170	170	170	145	125	170	170	170	170	170	170	170	170	145	125
		in.lb	1505	1505	1505	1283	1106	1505	1505	1505	1505	1505	1505	1505	1505	1283	1106
Nominal output torque (with n_{1N})	T_{2N}	Nm	100	100	100	90	80	100	100	100	100	100	100	100	100	90	80
		in.lb	885	885	885	797	708	885	885	885	885	885	885	885	885	797	708
Emergency stop torque (permitted 1000 times during the service life of the gearhead)	T_{2Not}	Nm	220	260	260	255	250	260	260	260	260	260	260	260	260	255	250
		in.lb	1947	2301	2301	2257	2213	2301	2301	2301	2301	2301	2301	2301	2301	2257	2213
Nominal input speed (with T_{2N} and 20°C ambient temperature) [b), c)]	n_{1N}	rpm	2200	2400	2700	2500	2500	3100	3100	3100	3100	3100	3100	3100	3500	4200	4200
Max. continuous speed (with 20% T_{2N} and 20°C ambient temperature)	n_{1Ncym}	rpm	3000	3400	3800	3400	3400	4000	4000	4000	4000	4000	4000	4000	4000	4200	4200
Max. input speed	n_{1Max}	rpm	4500	4500	4500	4500	4500	4500	4500	4500	4500	4500	4500	4500	4500	4500	4500
Mean no load running torque (with n_1 = 3000 rpm and 20°C gearhead temperature) [d)]	T_{012}	Nm	3.8	3.0	2.3	3.5	2.8	0.6	0.6	0.5	0.4	0.4	0.3	0.2	0.2	0.2	0.2
		in.lb	34	27	20	31	25	5.3	5.3	4.4	3.5	3.5	2.7	1.8	1.8	1.8	1.8
Max. torsional backlash	j_t	arcmin	≤ 4														
Torsional rigidity	C_{t21}	Nm/ arcmin	10	11	13	13	13	11	11	11	11	11	11	11	13	13	13
		in.lb/ arcmin	89	97	115	115	115	97	97	97	97	97	97	97	115	115	115
Max. axial force [e)]	F_{2AMax}	N	5700														
		lb_f	1283														
Max. radial force [e)]	F_{2RMax}	N	6300														
		lb_f	1418														
Max. tilting moment	M_{2KMax}	Nm	833														
		in.lb	7370														
Efficiency at full load	η	%	96					94									
Service life (For calculation, see the Chapter "Information")	L_h	h	> 20000														
Weight incl. standardadapter plate	m	kg	9.3					10.0									
		lb_m	21					22									
Operating noise (with n_1 = 3000 rpm no load)	L_{PA}	dB(A)	≤ 66														
Max. permitted housing temperature		°C	+90														
		F	194														
Ambient temperature		°C	0 to +40														
		F	32 to 104														
Lubrication			Lubricated for life														
Paint			Blue RAL 5002														
Direction of rotation			Motor and gearhead opposite directions														
Protection class			IP 65														
Moment of inertia (relates to the drive) Clamping hub diameter [mm] — E 19	J_1	kgcm²	–	–	–	–	–	1.02	0.97	0.86	0.84	0.75	0.74	0.69	0.69	0.68	0.68
		10^{-3} in.lb.s²						0.91	0.86	0.76	0.74	0.66	0.66	0.61	0.61	0.60	0.60
G 24	J_1	kgcm²	–	–	–	–	–	2.59	2.54	2.42	2.40	2.31	2.30	2.26	2.25	2.25	2.25
		10^{-3} in.lb.s²						2.29	2.25	2.14	2.13	2.05	2.04	2.00	1.99	1.99	1.99
H 28	J_1	kgcm²	4.64	3.80	3.34	2.98	2.79	–	–	–	–	–	–	–	–	–	–
		10^{-3} in.lb.s²	4.10	3.36	2.95	2.64	2.47										
K 38	J_1	kgcm²	11.9	11.0	10.6	10.2	10.0	–	–	–	–	–	–	–	–	–	–
		10^{-3} in.lb.s²	10.5	9.77	9.37	9.05	8.89										

Please contact us for information on the best configuration for S1 conditions of use (continuous operation).

[a)] Other ratios available on request
[b)] Higher speeds are possible if the nominal torque is reduced
[c)] For higher ambient temperatures, please reduce input speed
[d)] Idling torques decrease during operation
[e)] Refers to center of the output shaft or flange

All technical data for front output side applies.
Technical data for rearward output versions, see page 422.

View A

1-stage:

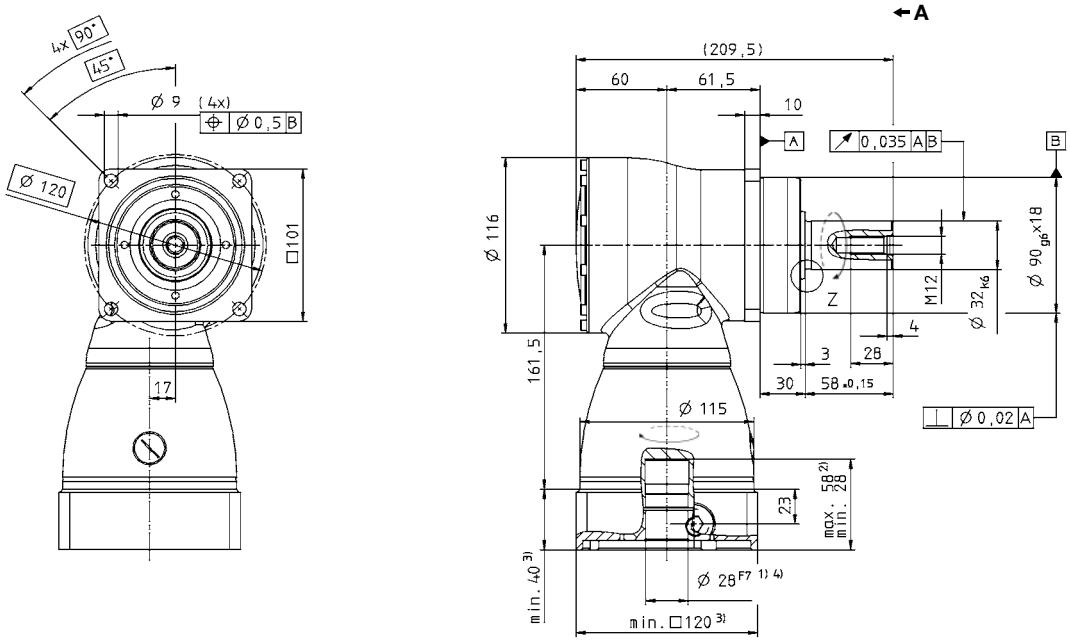

2-stage:

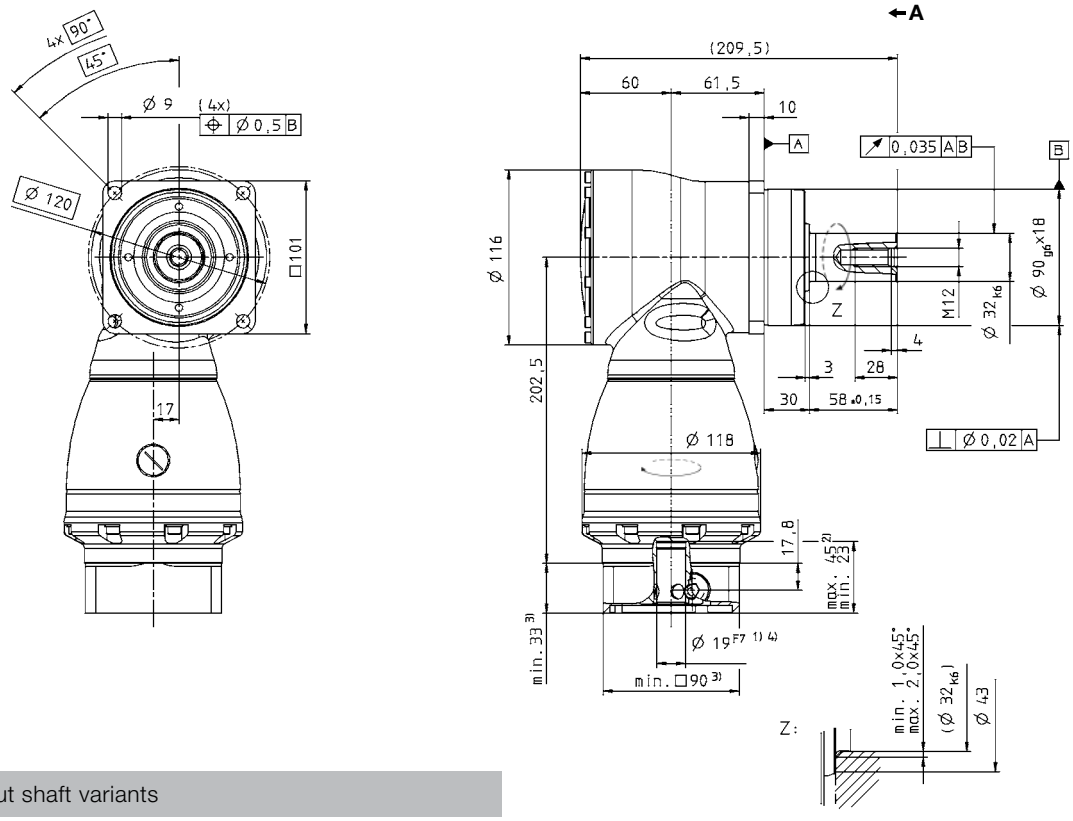

Alternatives: Output shaft variants

Keywayed output shaft in mm

E = key as per DIN 6885, sheet 1, form A

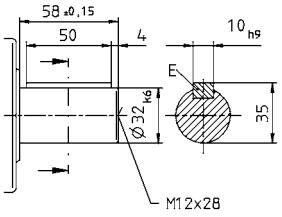

Involute gearing DIN 5480

X = W 32 x 1.25 x 30 x 24 x 6m

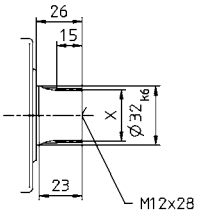

See technical data sheet for available clamping hub diameters (mass moment of inertia). Dimensions available on request.

Non-tolerated dimensions ±1 mm

1) Check motor shaft fit.
2) Min./Max. permissible motor shaft length. Longer motor shafts are adaptable, please contact us.
3) The dimensions depend on the motor.
4) Smaller motor shaft diameter is compensated by a bushing with a minimum thickness of 1 mm.

CAD data is available under
http://www.wittenstein-alpha.de/en/info-and-cad-finder.html

Motor mounting according to operating manual

SK+ 140 MF 1/2-stage

			1-stage					2-stage									
Ratio [a]	*i*		**3**	**4**	**5**	**7**	**10**	**12**	**16**	**20**	**25**	**28**	**35**	**40**	**50**	**70**	**100**
Max. acceleration torque (max. 1000 cycles per hour)	T_{2B}	Nm	300	300	300	250	210	300	300	300	300	300	300	300	300	250	210
		in.lb	2655	2655	2655	2213	1859	2655	2655	2655	2655	2655	2655	2655	2655	2213	1859
Nominal output torque (with n_{1N})	T_{2N}	Nm	190	190	190	175	160	190	190	190	190	190	190	190	190	175	160
		in.lb	1682	1682	1682	1549	1416	1682	1682	1682	1682	1682	1682	1682	1682	1549	1419
Emergency stop torque (permitted 1000 times during the service life of the gearhead)	T_{2Not}	Nm	400	500	500	450	400	500	500	500	500	500	500	500	500	450	400
		in.lb	3540	4425	4425	3983	3540	4425	4425	4425	4425	4425	4425	4425	4425	3983	3540
Nominal input speed (with T_{2N} and 20°C ambient temperature) [b), c)]	n_{1N}	rpm	1900	2000	2200	2000	2000	2900	2900	2900	2900	2900	2900	2900	3200	3200	3900
Max. continuous speed (with 20% T_{2N} and 20°C ambient temperature)	n_{1Ncym}	rpm	2500	2800	3100	2800	2800	4000	4000	4000	4000	4000	4000	4000	4200	4200	4200
Max. input speed	n_{1Max}	rpm	4500	4500	4500	4500	4500	4500	4500	4500	4500	4500	4500	4500	4500	4500	4500
Mean no load running torque (with n_1 = 3000 rpm and 20°C gearhead temperature) [d)]	T_{012}	Nm	7.0	5.2	4.5	7.5	5.5	1.4	0.9	0.7	0.5	0.5	0.4	0.4	0.3	0.3	0.3
		in.lb	62	46	40	66	49	12.4	8	6.2	4.4	4.4	3.5	3.5	2.7	2.7	2.7
Max. torsional backlash	j_t	arcmin	≤ 4														
Torsional rigidity	C_{t21}	Nm/ arcmin	27	30	32	32	32	29	29	29	29	29	29	29	31	31	31
		in.lb/ arcmin	239	266	283	283	283	257	257	257	257	257	257	257	274	274	274
Max. axial force [e)]	F_{2AMax}	N	9900														
		lb_f	2228														
Max. radial force [e)]	F_{2RMax}	N	9500														
		lb_f	2138														
Max. tilting moment	M_{2KMax}	Nm	1692														
		in.lb	14974														
Efficiency at full load	η	%	96					94									
Service life (For calculation, see the Chapter "Information")	L_h	h	> 20000														
Weight incl. standardadapter plate	*m*	kg	22.6					25.0									
		lb_m	50					55									
Operating noise (with n_1 = 3000 rpm without load)	L_{PA}	dB(A)	≤ 68														
Max. permitted housing temperature		°C	+90														
		F	194														
Ambient temperature		°C	0 to +40														
		F	32 to 104														
Lubrication			Lubricated for life														
Paint			Blue RAL 5002														
Direction of rotation			Motor and gearhead opposite directions														
Protection class			IP 65														
Moment of inertia (relates to the drive) Clamping hub diameter [mm] — G 24	J_1	kgcm²	–	–	–	–	–	4.21	3.85	3.28	3.17	2.78	2.73	2.48	2.46	2.43	2.42
		10^{-3} in.lb.s²						3.73	3.41	2.90	2.80	2.46	2.41	2.20	2.17	2.15	2.14
K 38	J_1	kgcm²	25.0	19.1	16.3	14.1	12.8	11.1	10.7	10.2	10.1	9.69	9.64	9.39	9.37	9.34	9.33
		10^{-3} in.lb.s²	22.1	16.9	14.4	12.4	11.3	9.83	9.51	9.01	8.92	8.58	8.53	8.31	8.29	8.27	8.26

[a)] Other ratios available on request
[b)] Higher speeds are possible if the nominal torque is reduced
[c)] For higher ambient temperatures, please reduce input speed
[d)] Idling torques decrease during operation
[e)] Refers to center of the output shaft or flange

All technical data for front output side applies.
Technical data for rearward output versions, see page 422.

Please contact us for information on the best configuration for S1 conditions of use (continuous operation).

View A

1-stage:

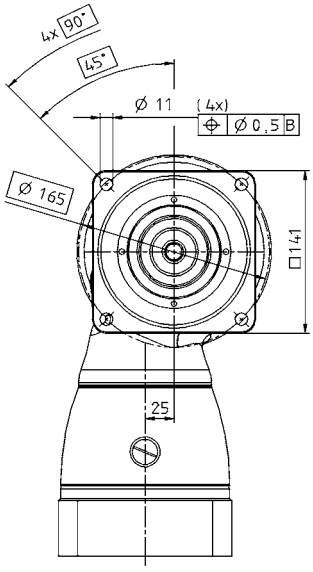

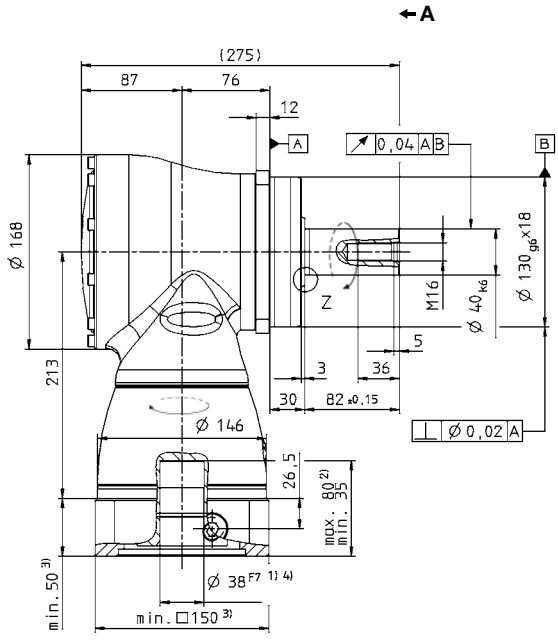

2-stage:

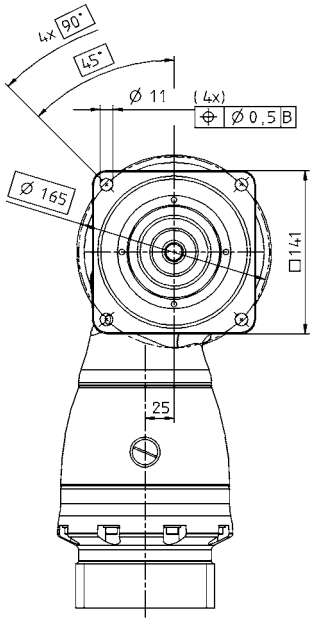

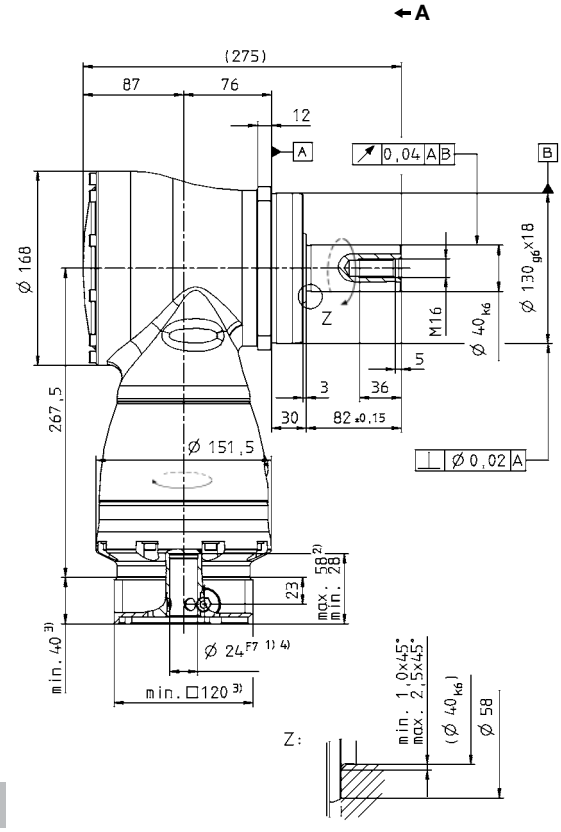

Alternatives: Output shaft variants

Keywayed output shaft in mm

E = key as per DIN 6885, sheet 1, form A

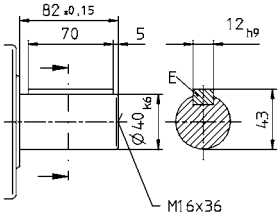

Involute gearing DIN 5480

X = W 40 x 2 x 30 x 18 x 6m

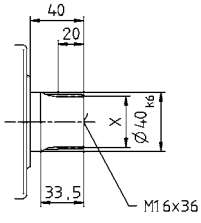

See technical data sheet for available clamping hub diameters (mass moment of inertia). Dimensions available on request.

Non-tolerated dimensions ±1 mm

1) Check motor shaft fit.
2) Min./Max. permissible motor shaft length. Longer motor shafts are adaptable, please contact us.
3) The dimensions depend on the motor.
4) Smaller motor shaft diameter is compensated by a bushing with a minimum thickness of 1 mm.

CAD data is available under
http://www.wittenstein-alpha.de/en/info-and-cad-finder.html

Motor mounting according to operating manual

SK+ 180 MF 1/2-stage

			1-stage					2-stage									
Ratio [a]	i		**3**	**4**	**5**	**7**	**10**	**12**	**16**	**20**	**25**	**28**	**35**	**40**	**50**	**70**	**100**
Max. acceleration torque (max. 1000 cycles per hour)	T_{2B}	Nm	640	640	640	550	470	640	640	640	640	640	640	640	640	550	470
		in.lb	5664	5664	5664	4868	4160	5664	5664	5664	5664	5664	5664	5664	5664	4868	4160
Nominal output torque (with n_{1N})	T_{2N}	Nm	400	400	400	380	360	400	400	400	400	400	400	400	400	380	360
		in.lb	3540	3540	3540	3363	3186	3540	3540	3540	3540	3540	3540	3540	3540	3363	3186
Emergency stop torque (permitted 1000 times during the service life of the gearhead)	T_{2Not}	Nm	900	1050	1050	970	900	1050	1050	1050	1050	1050	1050	1050	1050	970	900
		in.lb	7965	9293	9293	8585	7965	9293	9293	9293	9293	9293	9293	9293	9293	8585	7965
Nominal input speed (with T_{2N} and 20°C ambient temperature) [b), c)]	n_{1N}	rpm	1600	1800	2000	1800	1800	2700	2700	2700	2700	2700	2700	2700	2900	3200	3400
Max. continuous speed (with 20% T_{2N} and 20°C ambient temperature)	n_{1Ncym}	rpm	2000	2400	2800	2500	2500	3500	3500	3500	3500	3500	3500	3500	3500	3800	3800
Max. input speed	n_{1Max}	rpm	4000	4000	4000	4000	4000	4000	4000	4000	4000	4000	4000	4000	4000	4000	4000
Mean no load running torque (with n_1 = 3000 rpm and 20°C gearhead temperature) [d)]	T_{012}	Nm	14.5	12.0	10.0	15.0	12.5	3.0	2.3	1.8	1.6	1.3	1.2	0.9	0.9	0.9	0.9
		in.lb	128	106	89	133	111	26.6	20.4	15.9	14.2	11.5	10.6	8.0	8.0	8.0	8.0
Max. torsional backlash	j_t	arcmin	≤ 4														
Torsional rigidity	C_{t21}	Nm/ arcmin	64	71	79	78	77	71	71	71	71	71	71	71	78	78	78
		in.lb/ arcmin	566	628	699	690	681	628	628	628	628	628	628	628	690	690	690
Max. axial force [e)]	F_{2AMax}	N	14200														
		lb_f	3195														
Max. radial force [e)]	F_{2RMax}	N	14700														
		lb_f	3308														
Max. tilting moment	M_{2KMax}	Nm	3213														
		in.lb	28435														
Efficiency at full load	η	%	96					94									
Service life (For calculation, see the Chapter "Information")	L_h	h	> 20000														
Weight incl. standardadapter plate	m	kg	45.4					48									
		lb_m	100					106									
Operating noise (with n_1 = 3000 rpm no load)	L_{PA}	dB(A)	≤ 68														
Max. permitted housing temperature		°C	+90														
		F	194														
Ambient temperature		°C	0 to +40														
		F	32 to 104														
Lubrication			Lubricated for life														
Paint			Blue RAL 5002														
Direction of rotation			Motor and gearhead opposite directions														
Protection class			IP 65														
Moment of inertia (relates to the drive) Clamping hub diameter [mm] K 38	J_1	kgcm²	–	–	–	–	–	15.3	14.0	12.3	12.0	10.9	10.7	10.1	10.0	9.95	9.91
		10^{-3} in.lb.s²						13.6	12.3	10.9	10.6	9.65	9.48	8.96	8.88	8.81	8.77
M 48	J_1	kgcm²	73.3	51.6	42.1	34.0	29.7	30.0	28.7	27.1	26.7	25.6	25.4	24.8	24.7	24.7	24.6
		10^{-3} in.lb.s²	64.9	45.6	37.3	30.1	26.3	26.6	25.4	23.9	23.6	22.7	22.5	22.0	21.9	21.8	21.8

[a)] Other ratios available on request
[b)] Higher speeds are possible if the nominal torque is reduced
[c)] For higher ambient temperatures, please reduce input speed
[d)] Idling torques decrease during operation
[e)] Refers to center of the output shaft or flange

All technical data for front output side applies.
Technical data for rearward output versions, see page 422.

Please contact us for information on the best configuration for S1 conditions of use (continuous operation).

View A

1-stage:

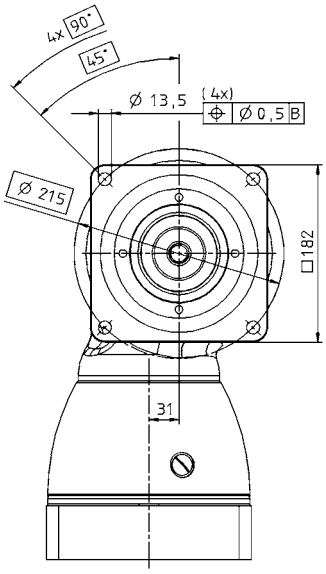

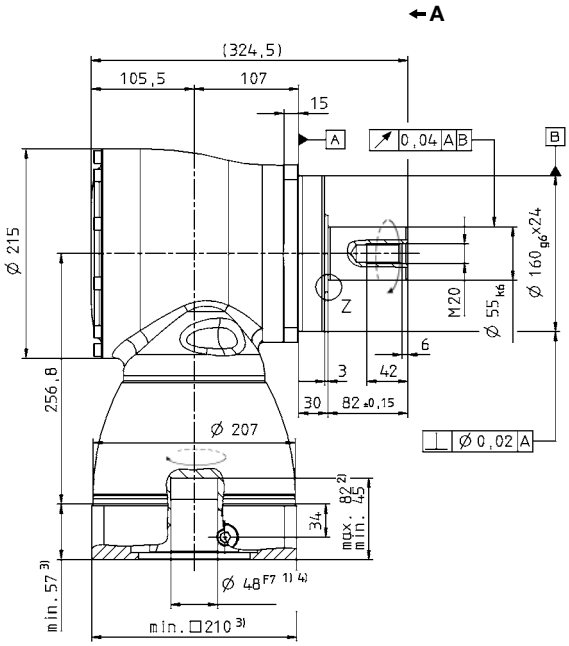

2-stage:

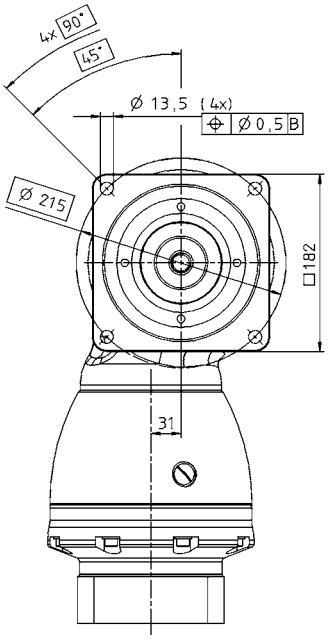

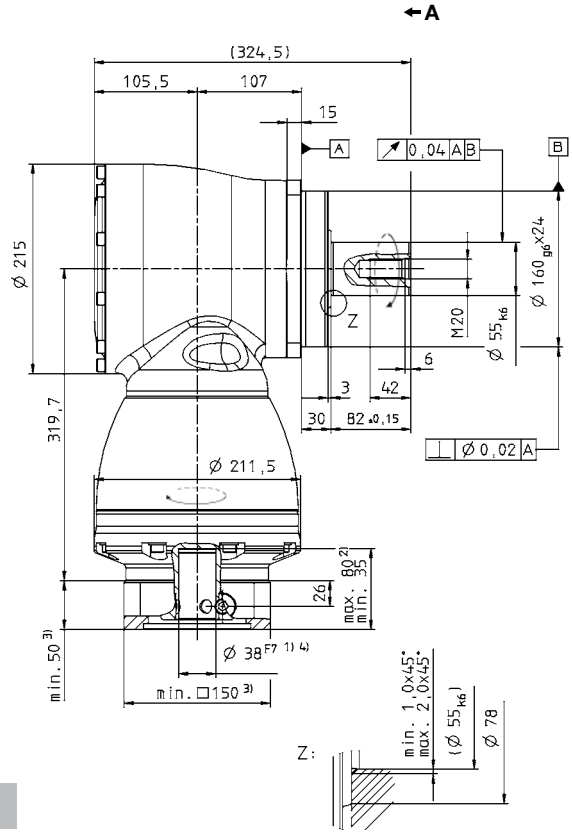

Alternatives: Output shaft variants

Keywayed output shaft in mm

E = key as per DIN 6885, sheet 1, form A

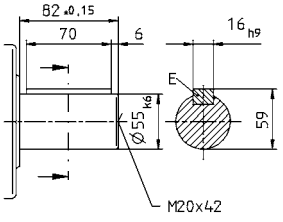

Involute gearing DIN 5480

X = W 55 x 2 x 30 x 26 x 6m

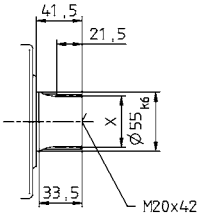

See technical data sheet for available clamping hub diameters (mass moment of inertia). Dimensions available on request.

Non-tolerated dimensions ±1 mm

1) Check motor shaft fit.
2) Min./Max. permissible motor shaft length. Longer motor shafts are adaptable, please contact us.
3) The dimensions depend on the motor.
4) Smaller motor shaft diameter is compensated by a bushing with a minimum thickness of 1 mm.

CAD data is available under
http://www.wittenstein-alpha.de/en/info-and-cad-finder.html

Motor mounting according to operating manual

SPK+ 075 MF 2-stage

				2-stage									
Ratio [a]			***i***	**12**	**16**	**20**	**25**	**28**	**35**	**40**	**50**	**70**	**100**
Max. acceleration torque (max. 1000 cycles per hour)			T_{2B}	Nm	110	110	110	110	110	110	80	100	110	90
				in.lb	974	974	974	974	974	974	974	885	974	797
Nominal output torque (with n_{1N})			T_{2N}	Nm	75	75	75	75	75	75	60	75	75	52
				in.lb	664	664	664	664	664	664	531	664	664	460
Emergency stop torque (permitted 1000 times during the service life of the gearhead)			T_{2Not}	Nm	160	160	200	200	250	175	120	150	210	200
				in.lb	1416	1416	1770	1770	2213	1549	1062	1328	1859	1770
Nominal input speed (with T_{2N} and 20°C ambient temperature) [b), c)]			n_{1N}	rpm	2000	2400	2400	2700	2400	2500	2500	2500	2500	2500
Max. continuous speed (with 20% T_{2N} and 20°C ambient temperature)			n_{1Ncym}	rpm	3000	3400	3400	3800	3400	3200	3200	3200	3200	3200
Max. input speed			n_{1Max}	rpm	6000	6000	6000	6000	6000	6000	6000	6000	6000	6000
Mean no load running torque (with n_1 = 3000 rpm and 20°C gearhead temperature) [d)]			T_{012}	Nm	1.5	1.3	1.2	1.2	1.2	1.3	1.3	1.3	1.3	1.3
				in.lb	13.3	11.5	10.6	10.6	10.6	11.5	11.5	11.5	11.5	11.5
Max. torsional backlash			j_t	arcmin	Standard ≤ 5 / Reduced ≤ 3									
Torsional rigidity			C_{t21}	Nm/ arcmin	10									
				in.lb/ arcmin	89									
Max. axial force [e)]			F_{2AMax}	N	3350									
				lb_f	753									
Max. radial force [e)]			F_{2RMax}	N	4000									
				lb_f	900									
Max. tilting moment			M_{2KMax}	Nm	236									
				in.lb	2089									
Efficiency at full load			η	%	94									
Service life (For calculation, see the Chapter "Information")			L_h	h	> 20000									
Weight incl. standard adapter plate			m	kg	5.2									
				lb_m	11.5									
Operating noise (with n_1 = 3000 rpm no load)			L_{PA}	dB(A)	≤ 66									
Max. permitted housing temperature				°C	+90									
				F	194									
Ambient temperature				°C	0 to +40									
				F	32 to 104									
Lubrication					Lubricated for life									
Paint					Blue RAL 5002									
Direction of rotation					Motor and gearhead opposite directions									
Protection class					IP 65									
Moment of inertia (relates to the drive) Clamping hub diameter [mm]	C	14	J_1	kgcm²	0.54	0.45	0.44	0.40	0.44	0.36	0.35	0.34	0.34	0.34
				10^{-3} in.lb.s²	0.48	0.40	0.39	0.35	0.39	0.32	0.31	0.30	0.30	0.30
	E	19	J_1	kgcm²	0.89	0.80	0.79	0.75	0.79	0.71	0.70	0.70	0.70	0.69
				10^{-3} in.lb.s²	0.79	0.71	0.70	0.66	0.70	0.63	0.62	0.62	0.62	0.61

[a)] Other ratios up to i=1000 available on request
[b)] Higher speeds are possible if the nominal torque is reduced
[c)] For higher ambient temperatures, please reduce input speed
[d)] Idling torques decrease during operation
[e)] Refers to center of the output shaft or flange

All technical data for front output side applies.
Technical data for rearward output versions, see page 422.

Please contact us for information on the best configuration for S1 conditions of use (continuous operation).

View A

2-stage:

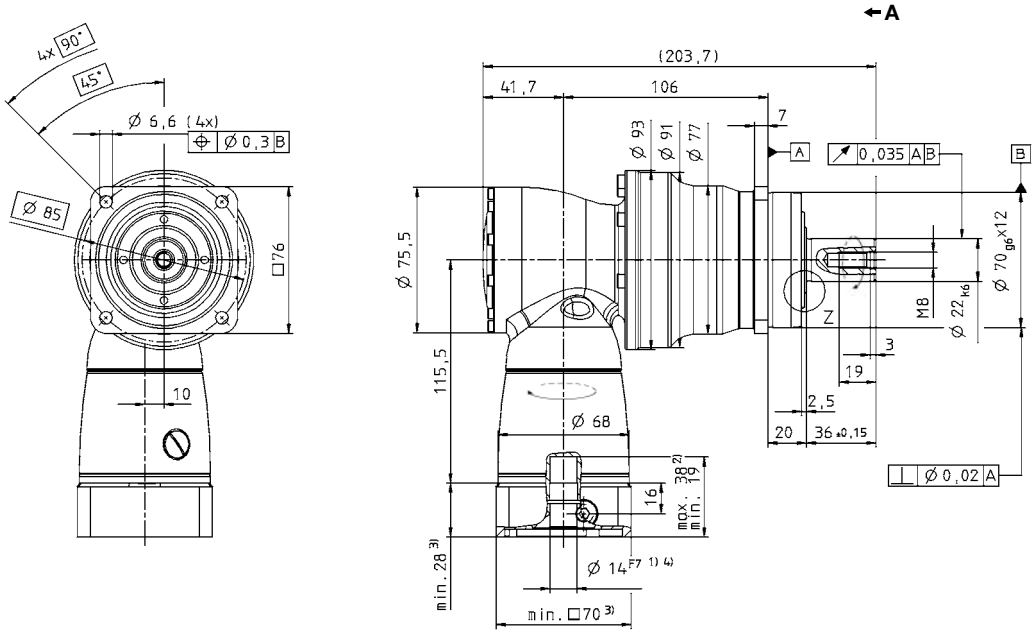

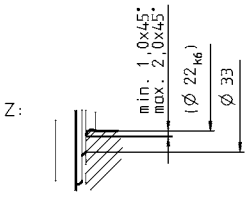

Right-angle gearheads
High End

SPK+

Alternatives: Output shaft variants

Keywayed output shaft in mm
E = key as per DIN 6885, sheet 1, form A

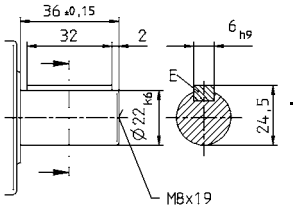

Involute gearing DIN 5480 in mm
X = W 22 x 1.25 x 30 x 16 x 6m, DIN 5480

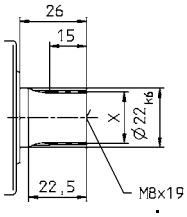

Shaft mounted
Mounted via shrink disc

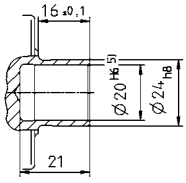

See technical data sheet for available clamping hub diameters (mass moment of inertia). Dimensions available on request.

Non-tolerated dimensions ±1 mm
1) Check motor shaft fit.
2) Min./Max. permissible motor shaft length. Longer motor shafts are adaptable, please contact us.
3) The dimensions depend on the motor.
4) Smaller motor shaft diameter is compensated by a bushing with a minimum thickness of 1 mm.

CAD data is available under
http://www.wittenstein-alpha.de/en/info-and-cad-finder.html

Motor mounting according to operating manual

SPK+ 075 MF 3-stage

			3-stage													
Ratio [a]	*i*		**64**	**84**	**100**	**125**	**140**	**175**	**200**	**250**	**280**	**350**	**400**	**500**	**700**	**1000**
Max. acceleration torque (max. 1000 cycles per hour)	T_{2B}	Nm	110	110	110	110	110	110	110	110	110	110	80	100	110	90
		in.lb	974	974	974	974	974	974	974	974	974	974	708	885	974	797
Nominal output torque (with n_{1N})	T_{2N}	Nm	75	75	75	75	75	75	75	75	75	75	60	75	75	52
		in.lb	664	664	664	664	664	664	664	664	664	664	531	664	664	460
Emergency stop torque (permitted 1000 times during the service life of the gearhead)	T_{2Not}	Nm	160	160	200	200	200	200	200	200	250	175	120	150	210	200
		in.lb	1416	1416	1770	1770	1770	1770	1770	1770	2213	1549	1062	1328	1859	1770
Nominal input speed (with T_{2N} and 20°C ambient temperature) [b), c)]	n_{1N}	rpm	4400	4400	4400	4400	4400	4400	4400	4800	4400	4800	5500	5500	5500	5500
Max. continuous speed (with 20% T_{2N} and 20°C ambient temperature)	n_{1Ncym}	rpm	5000	5000	5000	5000	5000	5000	5000	5000	5000	5000	5500	5500	5500	5500
Max. input speed	n_{1Max}	rpm	6000	6000	6000	6000	6000	6000	6000	6000	6000	6000	6000	6000	6000	6000
Mean no load running torque (with n_1 = 3000 rpm and 20°C gearhead temperature) [d)]	T_{012}	Nm	0.3	0.3	0.3	0.3	0.3	0.3	0.2	0.2	0.2	0.2	0.2	0.2	0.2	0.2
		in.lb	2.7	2.7	2.7	2.7	2.7	2.7	1.8	1.8	1.8	1.8	1.8	1.8	1.8	1.8
Max. torsional backlash	j_t	arcmin	Standard ≤ 5 / Reduced ≤ 3													
Torsional rigidity	C_{t21}	Nm/ arcmin	10													
		in.lb/ arcmin	89													
Max. axial force [e)]	F_{2AMax}	N	3350													
		lb_f	754													
Max. radial force [e)]	F_{2RMax}	N	4000													
		lb_f	900													
Max. tilting moment	M_{2KMax}	Nm	236													
		in.lb	2089													
Efficiency at full load	η	%	92													
Service life (For calculation, see the Chapter "Information")	L_h	h	> 20000													
Weight incl. standard adapter plate	*m*	kg	5.5													
		lb_m	12.2													
Operating noise (with n_1 = 3000 rpm no load)	L_{PA}	dB(A)	≤ 66													
Max. permitted housing temperature		°C	+90													
		F	194													
Ambient temperature		°C	0 to +40													
		F	32 to 104													
Lubrication			Lubricated for life													
Paint			Blue RAL 5002													
Direction of rotation			Motor and gearhead opposite directions													
Protection class			IP 65													
Moment of inertia (relates to the drive) Clamping hub diameter [mm] B 11	J_1	kgcm²	0.09	0.07	0.08	0.07	0.06	0.06	0.06	0.06	0.06	0.06	0.06	0.06	0.06	0.06
		10^{-3} in.lb.s²	0.08	0.06	0.07	0.06	0.05	0.05	0.05	0.05	0.05	0.05	0.05	0.05	0.05	0.05
C 14	J_1	kgcm²	0.20	0.18	0.19	0.19	0.18	0.18	0.17	0.17	0.17	0.17	0.17	0.17	0.17	0.17
		10^{-3} in.lb.s²	0.18	0.16	0.17	0.17	0.16	0.16	0.15	0.15	0.15	0.15	0.15	0.15	0.15	0.15

[a)] Other ratios up to i=1000 available on request
[b)] Higher speeds are possible if the nominal torque is reduced
[c)] For higher ambient temperatures, please reduce input speed
[d)] Idling torques decrease during operation
[e)] Refers to center of the output shaft or flange

All technical data for front output side applies.
Technical data for rearward output versions, see page 422.

Please contact us for information on the best configuration for S1 conditions of use (continuous operation).

View A

3-stage:

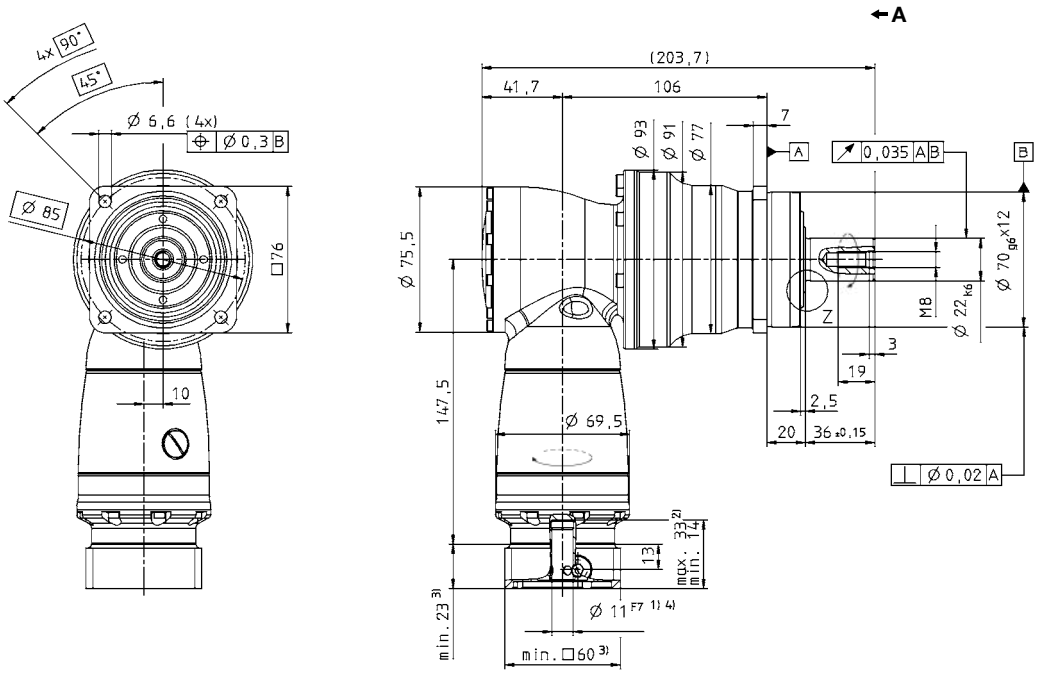

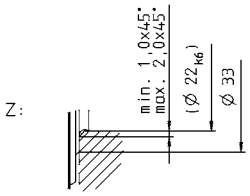

Alternatives: Output shaft variants

Keywayed output shaft in mm
E = key as per DIN 6885, sheet 1, form A

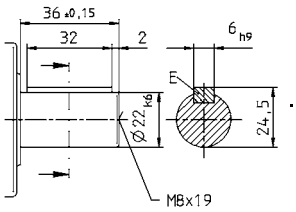

Involute gearing DIN 5480 in mm
X = W 22 x 1.25 x 30 x 16 x 6m, DIN 5480

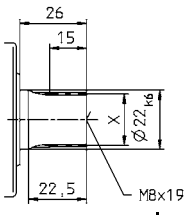

Shaft mounted
Mounted via shrink disc

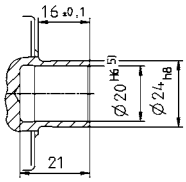

See technical data sheet for available clamping hub diameters (mass moment of inertia). Dimensions available on request.

Non-tolerated dimensions ±1 mm
1) Check motor shaft fit.
2) Min./Max. permissible motor shaft length. Longer motor shafts are adaptable, please contact us.
3) The dimensions depend on the motor.
4) Smaller motor shaft diameter is compensated by a bushing with a minimum thickness of 1 mm.

CAD data is available under
http://www.wittenstein-alpha.de/en/info-and-cad-finder.html

Motor mounting according to operating manual

SPK+ 100 MF 2-stage

			2-stage									
Ratio [a]	*i*		**12**	**16**	**20**	**25**	**28**	**35**	**40**	**50**	**70**	**100**
Max. acceleration torque (max. 1000 cycles per hour)	T_{2B}	Nm	280	280	300	300	300	300	200	250	300	225
		in.lb	2478	2478	2655	2655	2655	2655	1770	2213	2655	1991
Nominal output torque (with n_{1N})	T_{2N}	Nm	180	180	175	175	170	175	160	175	170	120
		in.lb	1593	1593	1549	1549	1505	1549	1416	1549	1505	1062
Emergency stop torque (permitted 1000 times during the service life of the gearhead)	T_{2Not}	Nm	400	400	500	500	625	500	400	500	625	500
		in.lb	3540	3540	4425	4425	5531	4425	3540	4425	5531	4425
Nominal input speed (with T_{2N} and 20°C ambient temperature) [b), c)]	n_{1N}	rpm	2000	2400	2400	2700	2400	2500	2500	2500	2500	2500
Max. continuous speed (with 20% T_{2N} and 20°C ambient temperature)	n_{1Ncym}	rpm	3000	3400	3400	3800	3400	3200	3200	3200	3200	3200
Max. input speed	n_{1Max}	rpm	6000	6000	6000	6000	6000	6000	6000	6000	6000	6000
Mean no load running torque (with n_1 = 3000 rpm and 20°C gearhead temperature) [d)]	T_{012}	Nm	2.5	2.1	2.0	1.8	2.0	2.2	2.0	2.0	2.0	2.0
		in.lb	22.1	18.6	17.7	15.9	17.7	19.5	17.7	17.7	17.7	17.7
Max. torsional backlash	j_t	arcmin	Standard ≤ 4 / Reduced ≤ 2									
Torsional rigidity	C_{t21}	Nm/ arcmin	31									
		in.lb/ arcmin	274									
Max. axial force [e)]	F_{2AMax}	N	5650									
		lb_f	1271									
Max. radial force [e)]	F_{2RMax}	N	6300									
		lb_f	1418									
Max. tilting moment	M_{2KMax}	Nm	487									
		in.lb	4310									
Efficiency at full load	η	%	94									
Service life (For calculation, see the Chapter "Information")	L_h	h	> 20000									
Weight incl. standard adapter plate	*m*	kg	9.7									
		lb_m	21.4									
Operating noise (with n_1 = 3000 rpm no load)	L_{PA}	dB(A)	≤ 68									
Max. permitted housing temperature		°C	+90									
		F	194									
Ambient temperature		°C	0 to +40									
		F	32 to 104									
Lubrication			Lubricated for life									
Paint			Blue RAL 5002									
Direction of rotation			Motor and gearhead opposite directions									
Protection class			IP 65									
Moment of inertia (relates to the drive) Clamping hub diameter [mm] — E 19	J_1	kgcm²	1.48	1.20	1.17	1.05	1.15	0.95	0.90	0.89	0.89	0.89
		10^{-3} in.lb.s²	1.31	1.06	1.04	0.93	1.02	0.84	0.79	0.79	0.79	0.78
H 28	J_1	kgcm²	2.89	2.62	2.59	2.46	2.56	2.36	2.31	2.31	2.30	2.30
		10^{-3} in.lb.s²	2.56	2.31	2.29	2.18	2.27	2.09	2.05	2.04	2.04	2.04

[a)] Other ratios up to i=1000 available on request
[b)] Higher speeds are possible if the nominal torque is reduced
[c)] For higher ambient temperatures, please reduce input speed
[d)] Idling torques decrease during operation
[e)] Refers to center of the output shaft or flange

All technical data for front output side applies.
Technical data for rearward output versions, see page 422.

Please contact us for information on the best configuration for S1 conditions of use (continuous operation).

View A

2-stage:

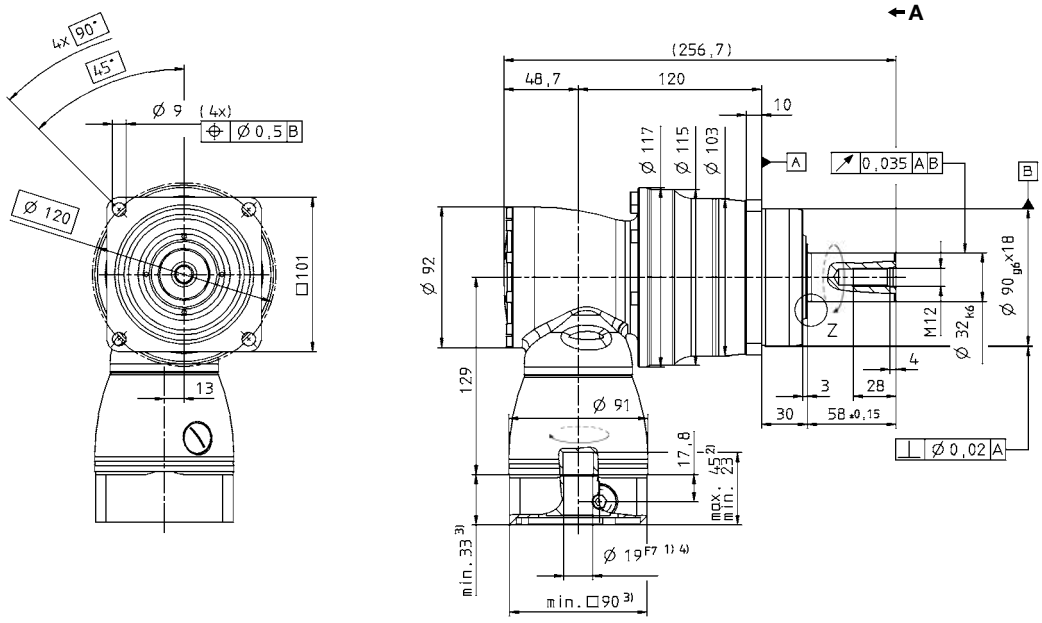

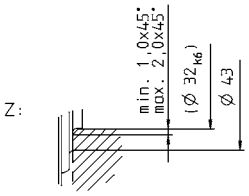

Alternatives: Output shaft variants

Keywayed output shaft in mm
E = key as per DIN 6885, sheet 1, form A

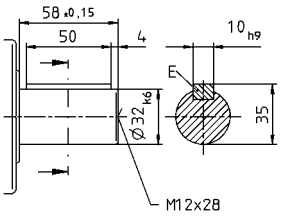

Involute gearing DIN 5480 in mm
X = W 32 x 1.25 x 30 x 24 x 6m, DIN 5480

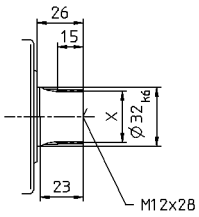

Shaft mounted
Mounted via shrink disc

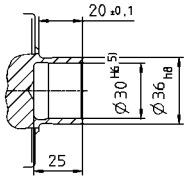

See technical data sheet for available clamping hub diameters (mass moment of inertia). Dimensions available on request.

Non-tolerated dimensions ±1 mm
1) Check motor shaft fit.
2) Min./Max. permissible motor shaft length. Longer motor shafts are adaptable, please contact us.
3) The dimensions depend on the motor.
4) Smaller motor shaft diameter is compensated by a bushing with a minimum thickness of 1 mm.

CAD data is available under
http://www.wittenstein-alpha.de/en/info-and-cad-finder.html

Motor mounting according to operating manual

SPK+ 100 MF 3-stage

				3-stage													
Ratio [a]			***i***	**64**	**84**	**100**	**125**	**140**	**175**	**200**	**250**	**280**	**350**	**400**	**500**	**700**	**1000**
Max. acceleration torque (max. 1000 cycles per hour)			T_{2B}	Nm	280	280	300	300	300	300	300	300	300	300	200	250	300	225
				in.lb	2478	2478	2655	2655	2655	2655	2655	2655	2655	2655	1770	2213	2655	1991
Nominal output torque (with n_{1N})			T_{2N}	Nm	180	180	175	175	175	175	175	175	170	175	160	175	170	120
				in.lb	1593	1593	1549	1549	1549	1549	1549	1549	1505	1549	1416	1549	1505	1062
Emergency stop torque (permitted 1000 times during the service life of the gearhead)			T_{2Not}	Nm	400	400	500	500	500	500	500	500	625	500	400	500	625	500
				in.lb	3540	3540	4425	4425	4425	4425	4425	4425	5531	4425	3540	4425	5531	4425
Nominal input speed (with T_{2N} and 20°C ambient temperature) [b), c)]			n_{1N}	rpm	3500	3500	3500	3500	3500	3500	3500	3800	3500	3800	4500	4500	4500	4500
Max. continuous speed (with 20% T_{2N} and 20°C ambient temperature)			n_{1Ncym}	rpm	4500	4500	4500	4500	4500	4500	4500	4500	4500	4500	4500	4500	4500	4500
Max. input speed			n_{1Max}	rpm	6000	6000	6000	6000	6000	6000	6000	6000	6000	6000	6000	6000	6000	6000
Mean no load running torque (with n_1 = 3000 rpm and 20°C gearhead temperature) [d)]			T_{012}	Nm	0.4	0.3	0.3	0.3	0.3	0.3	0.2	0.2	0.2	0.2	0.2	0.2	0.2	0.2
				in.lb	3.5	2.7	2.7	2.7	2.7	2.7	1.8	1.8	1.8	1.8	1.8	1.8	1.8	1.8
Max. torsional backlash			j_t	arcmin	Standard ≤ 4 / Reduced ≤ 2													
Torsional rigidity			C_{t21}	Nm/ arcmin	31													
				in.lb/ arcmin	274													
Max. axial force [e)]			F_{2AMax}	N	5650													
				lb_f	1271													
Max. radial force [e)]			F_{2RMax}	N	6300													
				lb_f	1418													
Max. tilting moment			M_{2KMax}	Nm	487													
				in.lb	4310													
Efficiency at full load			η	%	92													
Service life (For calculation, see the Chapter "Information")			L_h	h	> 20000													
Weight incl. standard adapter plate			m	kg	10.3													
				lb_m	22.8													
Operating noise (with n_1 = 3000 rpm no load)			L_{PA}	dB(A)	≤ 68													
Max. permitted housing temperature				°C	+90													
				F	194													
Ambient temperature				°C	0 to +40													
				F	32 to 104													
Lubrication					Lubricated for life													
Paint					Blue RAL 5002													
Direction of rotation					Motor and gearhead opposite directions													
Protection class					IP 65													
Moment of inertia (relates to the drive) Clamping hub diameter [mm]	C	14	J_1	kgcm²	0.28	0.23	0.24	0.23	0.21	0.20	0.19	0.18	0.19	0.18	0.18	0.18	0.18	0.18
				10^{-3} in.lb.s²	0.25	0.20	0.21	0.20	0.19	0.18	0.17	0.16	0.17	0.16	0.16	0.16	0.16	0.16
	E	19	J_1	kgcm²	0.72	0.63	0.68	0.68	0.63	0.63	0.63	0.63	0.63	0.63	0.63	0.63	0.63	0.63
				10^{-3} in.lb.s²	0.64	0.56	0.60	0.60	0.56	0.56	0.56	0.56	0.56	0.56	0.56	0.56	0.56	0.56

[a)] Other ratios up to i=1000 available on request
[b)] Higher speeds are possible if the nominal torque is reduced
[c)] For higher ambient temperatures, please reduce input speed
[d)] Idling torques decrease during operation
[e)] Refers to center of the output shaft or flange

All technical data for front output side applies.
Technical data for rearward output versions, see page 422.

Please contact us for information on the best configuration for S1 conditions of use (continuous operation).

View A

3-stage:

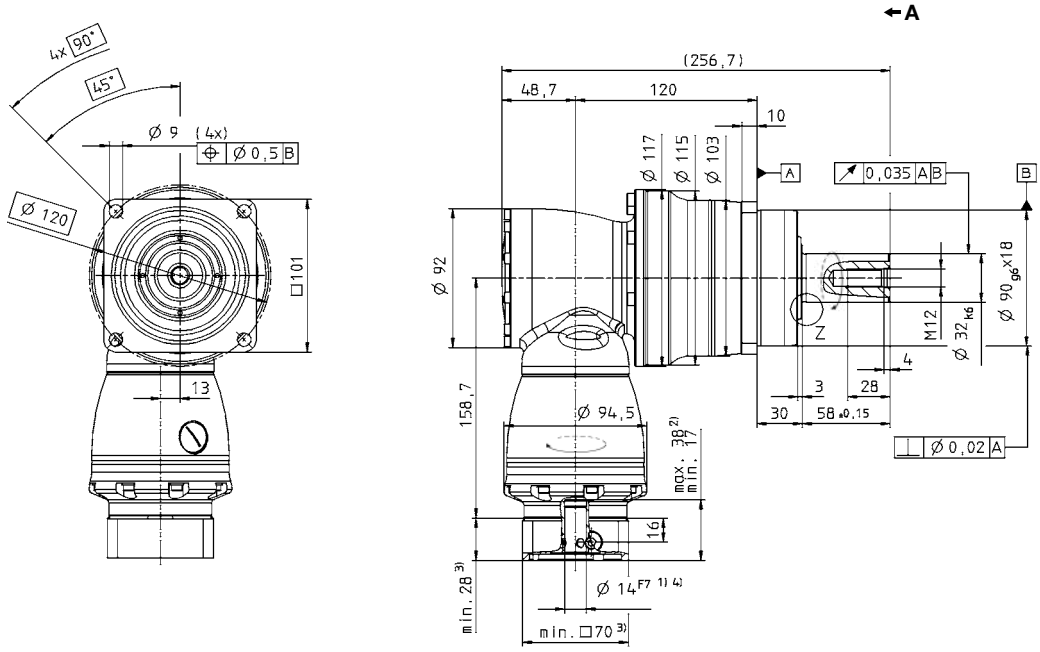

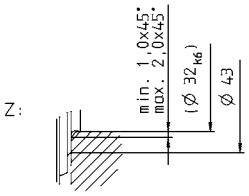

Alternatives: Output shaft variants

Keywayed output shaft in mm
E = key as per DIN 6885, sheet 1, form A

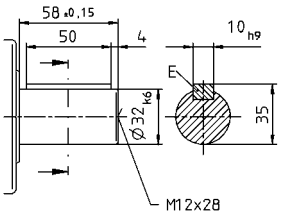

Involute gearing DIN 5480 in mm
X = W 32 x 1.25 x 30 x 24 x 6m, DIN 5480

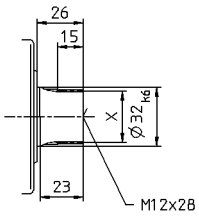

Shaft mounted
Mounted via shrink disc

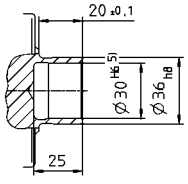

See technical data sheet for available clamping hub diameters (mass moment of inertia). Dimensions available on request.

Non-tolerated dimensions ±1 mm
1) Check motor shaft fit.
2) Min./Max. permissible motor shaft length. Longer motor shafts are adaptable, please contact us.
3) The dimensions depend on the motor.
4) Smaller motor shaft diameter is compensated by a bushing with a minimum thickness of 1 mm.

CAD data is available under
http://www.wittenstein-alpha.de/en/info-and-cad-finder.html

Motor mounting according to operating manual

SPK+ 140 MF 2-stage

			2-stage									
Ratio [a]	i		**12**	**16**	**20**	**25**	**28**	**35**	**40**	**50**	**70**	**100**
Max. acceleration torque (max. 1000 cycles per hour)	T_{2B}	Nm	600	600	600	600	600	600	500	600	600	480
		in.lb	5310	5310	5310	5310	5310	5310	4425	5310	5310	4248
Nominal output torque (with n_{1N})	T_{2N}	Nm	360	360	360	360	360	360	320	360	360	220
		in.lb	3186	3186	3186	3186	3186	3186	2832	3186	3186	1947
Emergency stop torque (permitted 1000 times during the service life of the gearhead)	T_{2Not}	Nm	1000	1000	1250	1250	1250	1250	1000	1250	1250	1000
		in.lb	8850	8850	11063	11063	11063	11063	8850	11063	11063	8850
Nominal input speed (with T_{2N} and 20°C ambient temperature) [b), c)]	n_{1N}	rpm	1900	2300	2300	2600	2300	2300	2300	2300	2300	2300
Max. continuous speed (with 20% T_{2N} and 20°C ambient temperature)	n_{1Ncym}	rpm	2700	3100	3100	3500	3100	3000	3000	3000	3000	3000
Max. input speed	n_{1Max}	rpm	4500	4500	4500	4500	4500	4500	4500	4500	4500	4500
Mean no load running torque (with n_1 = 3000 rpm and 20°C gearhead temperature) [d)]	T_{012}	Nm	4.0	3.7	3.6	2.8	3.5	3.9	3.1	3.1	3.1	3.1
		in.lb	35.4	32.7	31.9	24.8	31	34.5	27.4	27.4	27.4	27.4
Max. torsional backlash	j_t	arcmin	Standard ≤ 4 / Reduced ≤ 2									
Torsional rigidity	C_{t21}	Nm/ arcmin	53									
		in.lb/ arcmin	469									
Max. axial force [e)]	F_{2AMax}	N	9870									
		lb_f	2221									
Max. radial force [e)]	F_{2RMax}	N	9450									
		lb_f	2126									
Max. tilting moment	M_{2KMax}	Nm	952									
		in.lb	8425									
Efficiency at full load	η	%	94									
Service life (For calculation, see the Chapter "Information")	L_h	h	> 20000									
Weight incl. standard adapter plate	m	kg	20									
		lb_m	44									
Operating noise (with n_1 = 3000 rpm no load)	L_{PA}	dB(A)	≤ 68									
Max. permitted housing temperature		°C	+90									
		F	194									
Ambient temperature		°C	0 to +40									
		F	32 to 104									
Lubrication			Lubricated for life									
Paint			Blue RAL 5002									
Direction of rotation			Motor and gearhead opposite directions									
Protection class			IP 65									
Moment of inertia (relates to the drive) Clamping hub diameter [mm] — H 28	J_1	kgcm²	4.68	3.82	3.75	3.31	3.68	2.97	2.80	2.79	2.78	2.77
		10^{-3} in.lb.s²	4.14	3.38	3.32	2.93	3.26	2.63	2.48	2.47	2.46	2.45
K 38	J_1	kgcm²	11.8	11.0	10.9	10.5	10.9	10.1	9.96	9.95	9.94	9.94
		10^{-3} in.lb.s²	10.5	9.73	9.66	9.27	9.60	8.97	8.82	8.81	8.80	8.79

[a)] Other ratios up to i=1000 available on request
[b)] Higher speeds are possible if the nominal torque is reduced
[c)] For higher ambient temperatures, please reduce input speed
[d)] Idling torques decrease during operation
[e)] Refers to center of the output shaft or flange

All technical data for front output side applies.
Technical data for rearward output versions, see page 422.

Please contact us for information on the best configuration for S1 conditions of use (continuous operation).

View A

2-stage:

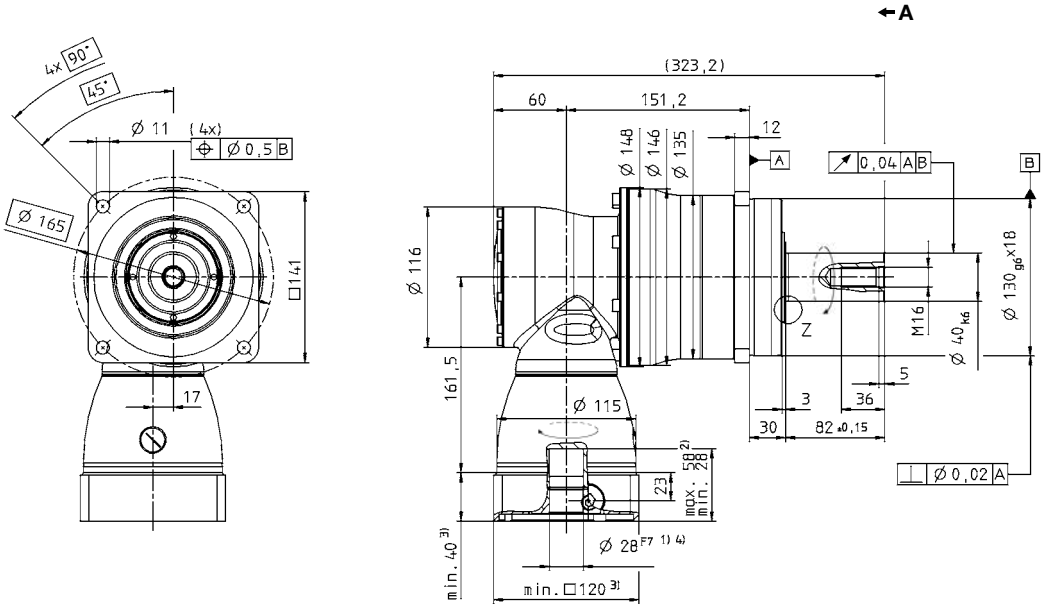

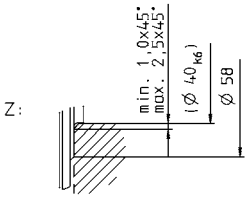

Right-angle gearheads
High End

SPK+

Alternatives: Output shaft variants

Keywayed output shaft in mm
E = key as per DIN 6885, sheet 1, form A

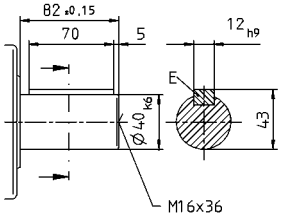

Involute gearing DIN 5480 in mm
X = W 40 x 2 x 30 x 18 x 6m, DIN 5480

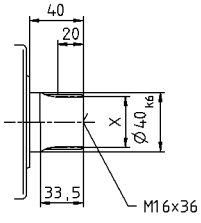

Shaft mounted
Mounted via shrink disc

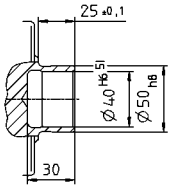

See technical data sheet for available clamping hub diameters (mass moment of inertia). Dimensions available on request.

Non-tolerated dimensions ±1 mm
1) Check motor shaft fit.
2) Min./Max. permissible motor shaft length. Longer motor shafts are adaptable, please contact us.
3) The dimensions depend on the motor.
4) Smaller motor shaft diameter is compensated by a bushing with a minimum thickness of 1 mm.

CAD data is available under
http://www.wittenstein-alpha.de/en/info-and-cad-finder.html

Motor mounting according to operating manual

SPK+ 140 MF 3-stage

			3-stage													
Ratio [a]	*i*		**64**	**84**	**100**	**125**	**140**	**175**	**200**	**250**	**280**	**350**	**400**	**500**	**700**	**1000**
Max. acceleration torque (max. 1000 cycles per hour)	T_{2B}	Nm	600	600	600	600	600	600	600	600	600	600	500	600	600	480
		in.lb	5310	5310	5310	5310	5310	5310	5310	5310	5310	5310	4425	5310	5310	4248
Nominal output torque (with n_{1N})	T_{2N}	Nm	360	360	360	360	360	360	360	360	360	360	320	360	360	220
		in.lb	3186	3186	3186	3186	3186	3186	3186	3186	3186	3186	2832	3186	3186	1947
Emergency stop torque (permitted 1000 times during the service life of the gearhead)	T_{2Not}	Nm	1000	1000	1250	1250	1250	1250	1250	1250	1250	1250	1000	1250	1250	1000
		in.lb	8850	8850	11063	11063	11063	11063	11063	11063	11063	11063	8850	11063	11063	8850
Nominal input speed (with T_{2N} and 20°C ambient temperature) [b), c)]	n_{1N}	rpm	3100	3100	3100	3100	3100	3100	3100	3500	3100	3500	4200	4200	4200	4200
Max. continuous speed (with 20% T_{2N} and 20°C ambient temperature)	n_{1Ncym}	rpm	4000	4000	4000	4000	4000	4000	4000	4000	4000	4000	4200	4200	4200	4200
Max. input speed	n_{1Max}	rpm	4500	4500	4500	4500	4500	4500	4500	4500	4500	4500	4500	4500	4500	4500
Mean no load running torque (with n_1 = 3000 rpm and 20°C gearhead temperature) [d)]	T_{012}	Nm	0.7	0.4	0.6	0.5	0.5	0.4	0.3	0.3	0.3	0.3	0.3	0.3	0.3	0.3
		in.lb	6.2	3.5	5.3	4.4	4.4	3.5	2.7	2.7	2.7	2.7	2.7	2.7	2.7	2.7
Max. torsional backlash	j_t	arcmin	Standard ≤ 4 / Reduced ≤ 2													
Torsional rigidity	C_{t21}	Nm/ arcmin	53													
		in.lb/ arcmin	469													
Max. axial force [e)]	F_{2AMax}	N	9870													
		lb_f	2221													
Max. radial force [e)]	F_{2RMax}	N	9450													
		lb_f	2126													
Max. tilting moment	M_{2KMax}	Nm	952													
		in.lb	8425													
Efficiency at full load	η	%	92													
Service life (For calculation, see the Chapter "Information")	L_h	h	> 20000													
Weight incl. standard adapter plate	*m*	kg	20.7													
		lb_m	45.7													
Operating noise (with n_1 = 3000 rpm no load)	L_{PA}	dB(A)	< 68													
Max. permitted housing temperature		°C	+90													
		F	194													
Ambient temperature		°C	0 to +40													
		F	32 to 104													
Lubrication			Lubricated for life													
Paint			Blue RAL 5002													
Direction of rotation			Motor and gearhead opposite directions													
Protection class			IP 65													
Moment of inertia (relates to the drive) Clamping hub diameter [mm] — E 19	J_1	kgcm²	1.01	0.76	0.88	0.85	0.76	0.75	0.70	0.69	0.70	0.69	0.69	0.69	0.69	0.69
		10^{-3} in.lb.s²	0.89	0.67	0.78	0.75	0.67	0.66	0.62	0.61	0.62	0.61	0.61	0.61	0.61	0.61
G 24	J_1	kgcm²	2.57	2.32	2.44	2.42	2.32	2.31	2.26	2.25	2.26	2.25	2.25	2.25	2.25	2.25
		10^{-3} in.lb.s²	2.27	2.05	2.16	2.14	2.05	2.04	2.00	1.99	2.00	1.99	1.99	1.99	1.99	1.99

[a)] Other ratios up to i=1000 available on request
[b)] Higher speeds are possible if the nominal torque is reduced
[c)] For higher ambient temperatures, please reduce input speed
[d)] Idling torques decrease during operation
[e)] Refers to center of the output shaft or flange

All technical data for front output side applies.
Technical data for rearward output versions, see page 422.

Please contact us for information on the best configuration for S1 conditions of use (continuous operation).

View A

3-stage:

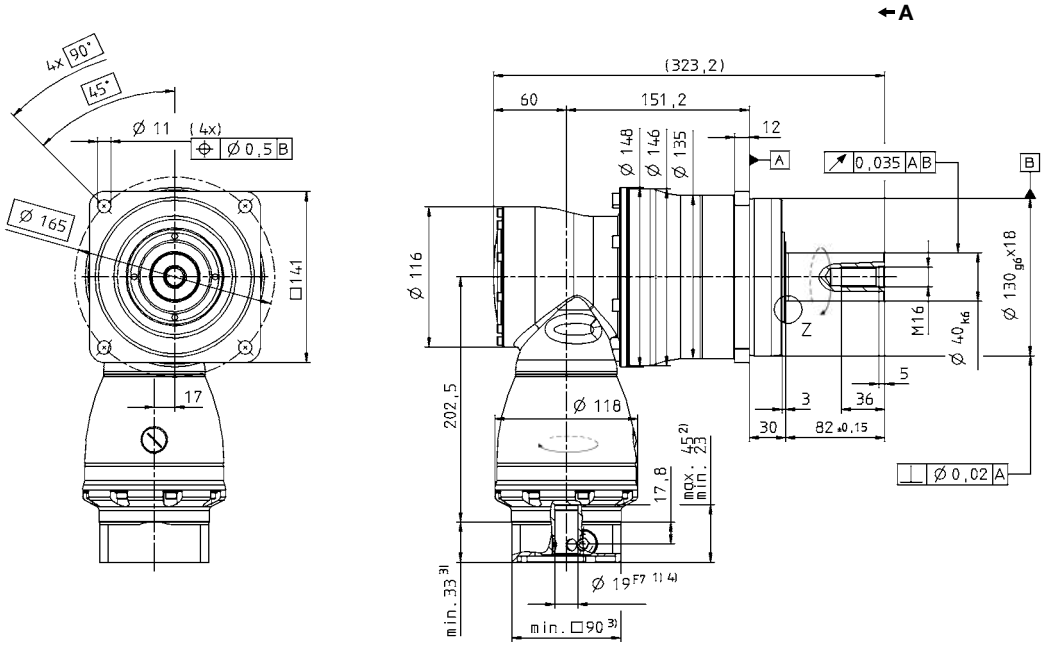

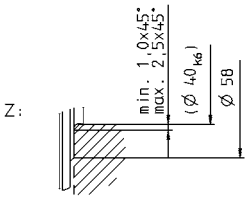

Alternatives: Output shaft variants

Keywayed output shaft in mm
E = key as per DIN 6885, sheet 1, form A

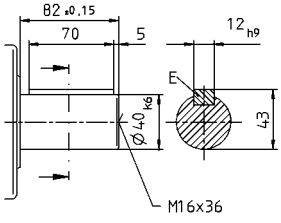

Involute gearing DIN 5480 in mm
X = W 40 x 2 x 30 x 18 x 6m, DIN 5480

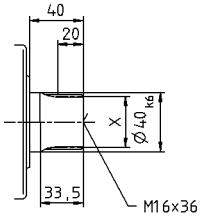

Shaft mounted
Mounted via shrink disc

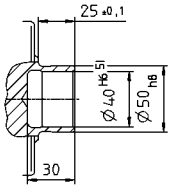

See technical data sheet for available clamping hub diameters (mass moment of inertia). Dimensions available on request.

Non-tolerated dimensions ±1 mm
1) Check motor shaft fit.
2) Min./Max. permissible motor shaft length. Longer motor shafts are adaptable, please contact us.
3) The dimensions depend on the motor.
4) Smaller motor shaft diameter is compensated by a bushing with a minimum thickness of 1 mm.

CAD data is available under
http://www.wittenstein-alpha.de/en/info-and-cad-finder.html

Motor mounting according to operating manual

SPK+ 180 MF 2-stage

			2-stage									
Ratio [a]	*i*		**12**	**16**	**20**	**25**	**28**	**35**	**40**	**50**	**70**	**100**
Max. acceleration torque (max. 1000 cycles per hour)	T_{2B}	Nm	1100	1100	1100	1100	1100	1100	840	1050	1100	880
		in.lb	9735	9735	9735	9735	9735	9735	7434	9293	9735	7788
Nominal output torque (with n_{1N})	T_{2N}	Nm	750	750	750	750	750	750	640	750	750	750
		in.lb	6638	6638	6638	6638	6638	6638	5664	6638	6638	6638
Emergency stop torque (permitted 1000 times during the service life of the gearhead)	T_{2Not}	Nm	1600	1600	2000	2000	2750	2000	1600	2000	2750	2200
		in.lb	14160	14160	17700	17700	24338	17700	14160	17700	24338	19470
Nominal input speed (with T_{2N} and 20°C ambient temperature) [b), c)]	n_{1N}	rpm	1600	1900	1900	2100	1900	2100	2100	2100	2100	2100
Max. continuous speed (with 20% T_{2N} and 20°C ambient temperature)	n_{1Ncym}	rpm	2300	2600	2600	2800	2600	3000	3000	3000	3000	3000
Max. input speed	n_{1Max}	rpm	4500	4500	4500	4500	4500	4500	4500	4500	4500	4500
Mean no load running torque (with n_1 = 3000 rpm and 20°C gearhead temperature) [d)]	T_{012}	Nm	9.0	6.5	6.5	5.5	6.0	8.0	6.0	6.0	6.0	6.0
		in.lb	79.7	57.5	57.5	48.7	53.1	70.8	53.1	53.1	53.1	53.1
Max. torsional backlash	j_t	arcmin	Standard ≤ 4 / Reduced ≤ 2									
Torsional rigidity	C_{t21}	Nm/ arcmin	175									
		in.lb/ arcmin	1549									
Max. axial force [e)]	F_{2AMax}	N	14150									
		lb_f	3184									
Max. radial force [e)]	F_{2RMax}	N	14700									
		lb_f	3308									
Max. tilting moment	M_{2KMax}	Nm	1600									
		in.lb	14160									
Efficiency at full load	η	%	94									
Service life (For calculation, see the Chapter "Information")	L_h	h	> 20000									
Weight incl. standardadapter plate	*m*	kg	45									
		lb_m	99									
Operating noise (with n_1 = 3000 rpm no load)	L_{PA}	dB(A)	≤ 70									
Max. permitted housing temperature		°C	+90									
		F	194									
Ambient temperature		°C	0 to +40									
		F	32 to 104									
Lubrication			Lubricated for life									
Paint			Blue RAL 5002									
Direction of rotation			Motor and gearhead opposite directions									
Protection class			IP 65									
Moment of inertia (relates to the drive) K 38	J_1	kgcm²	24.7	19.5	19.0	16.3	18.6	14.0	12.9	12.8	12.7	12.7
Clamping hub diameter [mm]		10^{-3} in.lb.s²	21.9	17.2	16.8	14.4	16.5	12.4	11.4	11.3	11.3	11.2

[a)] Other ratios up to i=1000 available on request
[b)] Higher speeds are possible if the nominal torque is reduced
[c)] For higher ambient temperatures, please reduce input speed
[d)] Idling torques decrease during operation
[e)] Refers to center of the output shaft or flange

All technical data for front output side applies.
Technical data for rearward output versions, see page 422.

Please contact us for information on the best configuration for S1 conditions of use (continuous operation).

View A

2-stage:

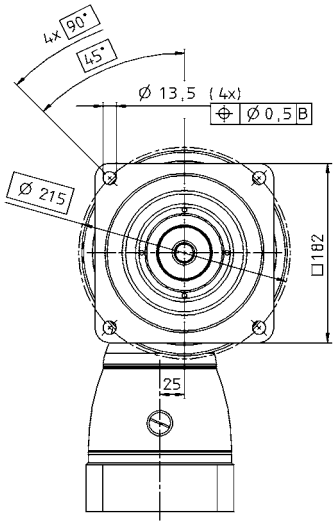

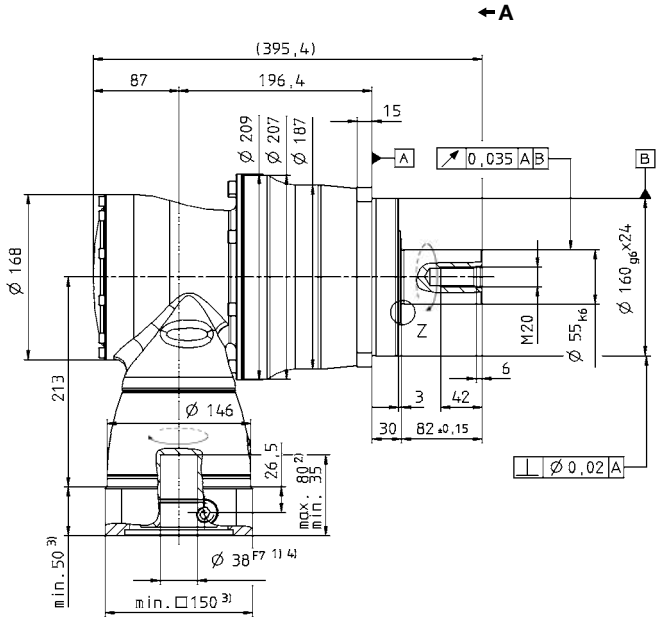

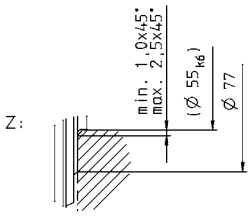

Alternatives: Output shaft variants

Keywayed output shaft in mm
E = key as per DIN 6885, sheet 1, form A

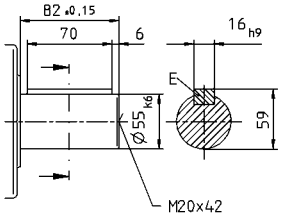

Involute gearing DIN 5480 in mm
X = W 55 x 2 x 30 x 26 x 6m, DIN 5480

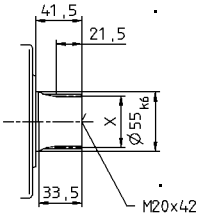

Shaft mounted
Mounted via shrink disc

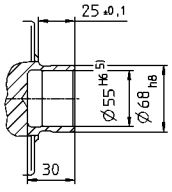

See technical data sheet for available clamping hub diameters (mass moment of inertia). Dimensions available on request.

Non-tolerated dimensions ±1 mm
1) Check motor shaft fit.
2) Min./Max. permissible motor shaft length. Longer motor shafts are adaptable, please contact us.
3) The dimensions depend on the motor.
4) Smaller motor shaft diameter is compensated by a bushing with a minimum thickness of 1 mm.

CAD data is available under
http://www.wittenstein-alpha.de/en/info-and-cad-finder.html

Motor mounting according to operating manual

SPK+ 180 MF 3-stage

				3-stage													
Ratio [a]			*i*	**64**	**84**	**100**	**125**	**140**	**175**	**200**	**250**	**280**	**350**	**400**	**500**	**700**	**1000**
Max. acceleration torque (max. 1000 cycles per hour)			T_{2B} Nm	1100	1100	1100	1100	1100	1100	1100	1100	1100	1100	840	1050	1100	880
			in.lb	9735	9735	9735	9735	9735	9735	9735	9735	9735	9735	7434	9293	9735	7788
Nominal output torque (with n_{1N})			T_{2N} Nm	750	750	750	750	750	750	750	750	750	750	640	750	750	750
			in.lb	6638	6638	6638	6638	6638	6638	6638	6638	6638	6638	5664	6638	6638	6638
Emergency stop torque (permitted 1000 times during the service life of the gearhead)			T_{2Not} Nm	1600	1600	2000	2000	2000	2000	2000	2000	2750	2000	1600	2000	2750	2200
			in.lb	14160	14160	17700	17700	17700	17700	17700	17700	24338	17700	14160	17700	24338	19470
Nominal input speed (with T_{2N} and 20°C ambient temperature) [b), c)]			n_{1N} rpm	2900	2900	2900	2900	2900	2900	2900	3200	2900	3200	3900	3900	3900	3900
Max. continuous speed (with 20% T_{2N} and 20°C ambient temperature)			n_{1Ncym} rpm	4000	4000	4000	4000	4000	4000	4000	4000	4000	4000	4200	4200	4200	4200
Max. input speed			n_{1Max} rpm	4500	4500	4500	4500	4500	4500	4500	4500	4500	4500	4500	4500	4500	4500
Mean no load running torque (with n_1 = 3000 rpm and 20°C gearhead temperature) [d)]			T_{012} Nm	1	0.5	0.8	0.6	0.6	0.5	0.5	0.4	0.5	0.4	0.4	0.4	0.4	0.4
			in.lb	8.9	4.4	7.1	5.3	5.3	4.4	4.4	3.5	4.4	3.5	3.5	3.5	3.5	3.5
Max. torsional backlash			j_t arcmin	Standard ≤ 4 / Reduced ≤ 2													
Torsional rigidity			C_{t21} Nm/ arcmin	175													
			in.lb/ arcmin	1549													
Max. axial force [e)]			F_{2AMax} N	14150													
			lb_f	3184													
Max. radial force [e)]			F_{2RMax} N	14700													
			lb_f	3308													
Max. tilting moment			M_{2KMax} Nm	1600													
			in.lb	14160													
Efficiency at full load			η %	92													
Service life (For calculation, see the Chapter "Information")			L_h h	> 20000													
Weight incl. standardadapter plate			*m* kg	47.4													
			lb_m	104.8													
Operating noise (with n_1 = 3000 rpm no load)			L_{PA} dB(A)	< 70													
Max. permitted housing temperature			°C	+90													
			F	194													
Ambient temperature			°C	0 to +40													
			F	32 to 104													
Lubrication				Lubricated for life													
Paint				Blue RAL 5002													
Direction of rotation				Motor and gearhead opposite directions													
Protection class				IP 65													
Moment of inertia (relates to the drive) Clamping hub diameter [mm]	G	24	J_1 kgcm²	3.97	2.82	3.36	3.22	2.82	2.75	2.50	2.47	2.50	2.44	2.42	2.42	2.42	2.42
			10^{-3} in.lb.s²	3.51	2.50	2.97	2.85	2.50	2.43	2.21	2.19	2.21	2.16	2.14	2.14	2.14	2.14
	K	38	J_1 kgcm²	10.90	9.74	10.30	10.10	9.74	9.66	9.41	9.38	9.41	9.38	9.33	9.33	9.33	9.33
			10^{-3} in.lb.s²	9.65	8.62	9.12	8.94	8.62	8.55	8.33	8.30	8.33	8.30	8.26	8.26	8.26	8.26

[a)] Other ratios up to i=1000 available on request
[b)] Higher speeds are possible if the nominal torque is reduced
[c)] For higher ambient temperatures, please reduce input speed
[d)] Idling torques decrease during operation
[e)] Refers to center of the output shaft or flange

All technical data for front output side applies.
Technical data for rearward output versions, see page 422.

Please contact us for information on the best configuration for S1 conditions of use (continuous operation).

View A

3-stage:

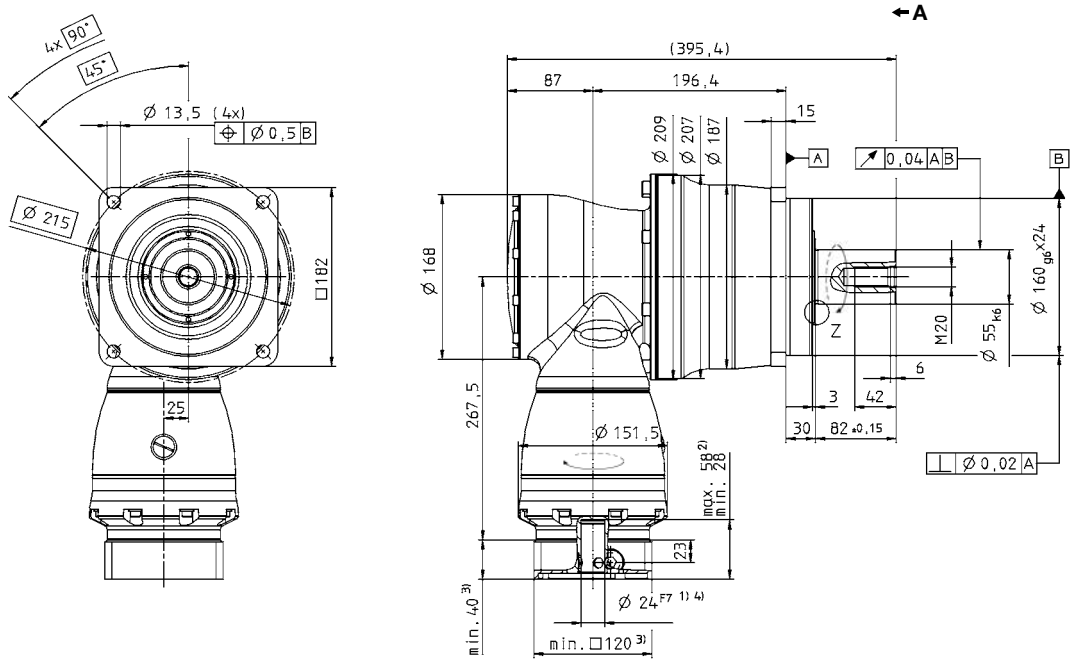

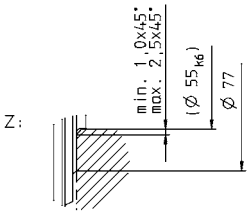

Alternatives: Output shaft variants

Keywayed output shaft in mm
E = key as per DIN 6885, sheet 1, form A

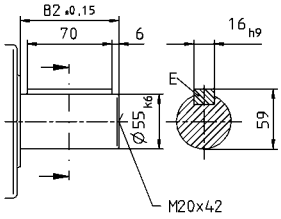

Involute gearing DIN 5480 in mm
X = W 55 x 2 x 30 x 26 x 6m, DIN 5480

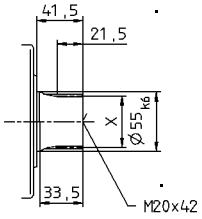

Shaft mounted
Mounted via shrink disc

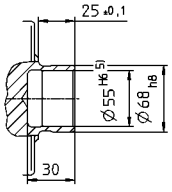

See technical data sheet for available clamping hub diameters (mass moment of inertia). Dimensions available on request.

Non-tolerated dimensions ±1 mm
1) Check motor shaft fit.
2) Min./Max. permissible motor shaft length. Longer motor shafts are adaptable, please contact us.
3) The dimensions depend on the motor.
4) Smaller motor shaft diameter is compensated by a bushing with a minimum thickness of 1 mm.

CAD data is available under
http://www.wittenstein-alpha.de/en/info-and-cad-finder.html

Motor mounting according to operating manual

SPK+ 210 MF 2-stage

			2-stage									
Ratio [a]	*i*		**12**	**16**	**20**	**25**	**28**	**35**	**40**	**50**	**70**	**100**
Max. acceleration torque (max. 1000 cycles per hour)	T_{2B}	Nm	2500	2500	2500	2500	2400	2400	1850	2300	2400	1900
		in.lb	22125	22125	22125	22125	21240	21240	16373	20355	21240	16815
Nominal output torque (with n_{1N})	T_{2N}	Nm	1500	1500	1500	1500	1400	1500	1400	1500	1400	1000
		in.lb	13.275	13275	13275	13275	12390	13275	12390	13275	12390	8850
Emergency stop torque (permitted 1000 times during the service life of the gearhead)	T_{2Not}	Nm	3600	4200	5200	5200	5200	5200	3600	4500	5200	5000
		in.lb	31860	37170	46020	46020	46020	46020	31860	39825	46020	44250
Nominal input speed (with T_{2N} and 20°C ambient temperature) [b), c)]	n_{1N}	rpm	1500	1700	1700	1900	1700	1900	1700	1700	1700	1700
Max. continuous speed (with 20 % T_{2N} and 20°C ambient temperature)	n_{1Ncym}	rpm	1900	2300	2300	2700	2300	2700	2400	2400	2400	2400
Max. input speed	n_{1Max}	rpm	4000	4000	4000	4000	4000	4000	4000	4000	4000	4000
Mean no load running torque (with n_1 = 3000 rpm and 20°C gearhead temperature) [d)]	T_{012}	Nm	18.5	17.0	15.0	13.0	14.0	12.0	15.0	15.0	14.0	13.0
		in.lb	163.7	150.5	132.8	115.1	123.9	106.2	132.8	132.8	123.9	115.1
Max. torsional backlash	j_t	arcmin	Standard ≤4 / Reduced ≤2									
Torsional rigidity	C_{t21}	Nm/ arcmin	300	300	300	300	300	300	300	300	300	300
		in.lb/ arcmin	2.655	2.655	2.655	2.655	2.655	2.655	2.655	2.655	2.655	2.655
Max. axial force [e)]	F_{2AMax}	N	30000									
		lb_f	6750									
Max. radial force [e)]	F_{2RMax}	N	21000									
		lb_f	4725									
Max. tilting moment	M_{2KMax}	Nm	3100									
		in.lb	27435									
Efficiency at full load	η	%	94									
Service life (For calculation, see the Chapter "Information")	L_h	h	> 20000									
Weight incl. standard adapter plate	*m*	kg	82									
		lb_m	181									
Operating noise (with n_1 = 3000 rpm no load)	L_{PA}	dB(A)	≤ 71									
Max. permitted housing temperature		°C	+90									
		F	194									
Ambient temperature		°C	0 to +40									
		F	32 to 104									
Lubrication			Lubricated for life									
Paint			Blue RAL 5002									
Direction of rotation			Motor and gearhead opposite directions									
Protection class			IP 65									
Moment of inertia (relates to the drive) Clamping hub diameter [mm] M 48	J_1	$kgcm^2$	78.80	54.60	53.00	43.40	51.50	42.20	30.20	30.00	29.80	29.80
		10^{-3} in.lb.s²	69.74	48.32	46.91	38.41	45.58	37.35	26.73	26.55	26.37	26.37

[a)] Other ratios available on request
[b)] Higher speeds are possible if the nominal torque is reduced
[c)] For higher ambient temperatures, please reduce input speed
[d)] Idling torques decrease during operation
[e)] Refers to center of the output shaft or flange

All technical data for front output side applies.
Technical data for rearward output versions, see page 422.

Please contact us for information on the best configuration for S1 conditions of use (continuous operation).

View A

2-stage:

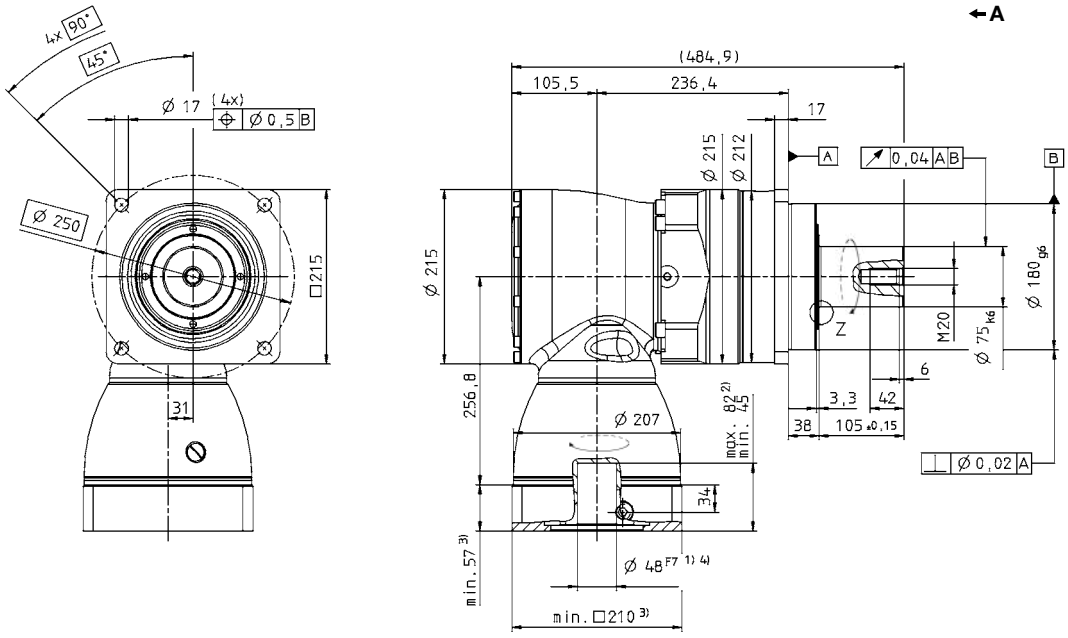

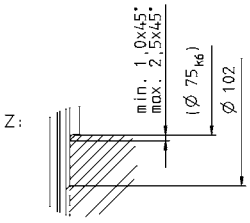

Right-angle gearheads
High End

SPK+

Alternatives: Output shaft variants

Keywayed output shaft in mm
E = key as per DIN 6885, sheet 1, form A

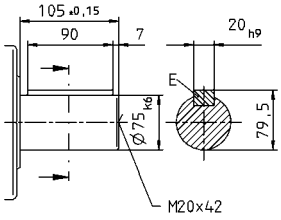

Involute gearing DIN 5480 in mm
X = W 70 x 2 x 30 x 34 x 6m, DIN 5480

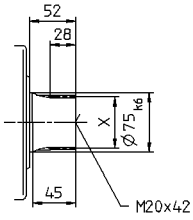

See technical data sheet for available clamping hub diameters (mass moment of inertia). Dimensions available on request.

Non-tolerated dimensions ±1 mm
1) Check motor shaft fit.
2) Min./Max. permissible motor shaft length. Longer motor shafts are adaptable, please contact us.
3) The dimensions depend on the motor.
4) Smaller motor shaft diameter is compensated by a bushing with a minimum thickness of 1 mm.

CAD data is available under
http://www.wittenstein-alpha.de/en/info-and-cad-finder.html

Motor mounting according to operating manual

SPK+ 210 MF 3-stage

			3-stage													
Ratio [a]	i		**64**	**84**	**100**	**125**	**140**	**175**	**200**	**250**	**280**	**350**	**400**	**500**	**700**	**1000**
Max. acceleration torque (max. 1000 cycles per hour)	T_{2B}	Nm	2400	2400	2500	2500	2500	2500	2500	2500	2400	2400	1900	2350	2400	1900
		in.lb	21240	21240	22125	22125	22125	22125	22125	22125	21240	21240	16815	20798	21240	16815
Nominal output torque (with n_{1N})	T_{2N}	Nm	1500	1500	1500	1500	1500	1500	1500	1500	1400	1400	1500	1500	1400	1000
		in.lb	13275	13275	13275	13275	13275	13275	13275	13275	12390	12390	13275	13275	12390	8850
Emergency stop torque (permitted 1000 times during the service life of the gearhead)	T_{2Not}	Nm	4200	3600	5200	5200	5200	5200	5200	5200	5200	5200	3600	4500	5200	5000
		in.lb	37170	31860	46020	46020	46020	46020	46020	46020	46020	46020	31860	39825	46020	44250
Nominal input speed (with T_{2N} and 20°C ambient temperature) [b), c)]	n_{1N}	rpm	2700	2700	2700	2700	2700	2700	2700	2900	2700	2900	3400	3400	3400	3400
Max. continuous speed (with 20 % T_{2N} and 20°C ambient temperature)	n_{1Ncym}	rpm	3500	3500	3500	3500	3500	3500	3500	3500	3500	3500	3500	3500	3800	3800
Max. input speed	n_{1Max}	rpm	4000	4000	4000	4000	4000	4000	4000	4000	4000	4000	4000	4000	4000	4000
Mean no load running torque (with n_1 = 3000 rpm and 20°C gearhead temperature) [d)]	T_{012}	Nm	2.4	1.2	1.9	1.7	1.3	1.3	1.0	1.0	1.0	1.0	1.0	1.0	1.0	1.0
		in.lb	21.2	10.6	16.8	15.0	11.5	11.5	8.9	8.9	8.9	8.9	8.9	8.9	8.9	8.9
Max. torsional backlash	j_t	arcmin	Standard ≤4 / Reduced ≤2													
Torsional rigidity	C_{t21}	Nm/ arcmin	300	300	300	300	300	300	300	300	300	300	300	300	300	300
		in.lb/ arcmin	2.655	2.655	2.655	2.655	2.655	2.655	2.655	2.655	2.655	2.655	2.655	2.655	2.655	2.655
Max. axial force [e)]	F_{2AMax}	N	30000													
		lb_f	6750													
Max. radial force [e)]	F_{2RMax}	N	21000													
		lb_f	4725													
Max. tilting moment	M_{2KMax}	Nm	3100													
		in.lb	27435													
Efficiency at full load	η	%	92													
Service life (For calculation, see the Chapter "Information")	L_h	h	> 20000													
Weight incl. standard adapter plate	m	kg	86													
		lb_m	190													
Operating noise (with n_1 = 3000 rpm no load)	L_{PA}	dB(A)	≤ 71													
Max. permitted housing temperature		°C	+90													
		F	194													
Ambient temperature		°C	0 to +40													
		F	32 to 104													
Lubrication			Lubricated for life													
Paint			Blue RAL 5002													
Direction of rotation			Motor and gearhead opposite directions													
Protection class			IP 65													
Moment of inertia (relates to the drive) Clamping hub diameter [mm] K 38	J_1	kgcm²	14.00	10.90	12.30	12.00	10.90	10.70	10.10	10.00	10.10	10.00	9.90	9.90	9.90	9.90
		10^{-3} in.lb.s²	12.39	9.65	10.89	10.62	9.65	9.47	8.94	8.85	8.94	8.85	8.76	8.76	8.76	8.76
M 48	J_1	kgcm²	28.70	25.60	27.10	26.70	26.70	25.60	24.80	24.70	24.80	24.70	24.60	24.60	24.60	24.60
		10^{-3} in.lb.s²	25.40	22.66	23.98	23.63	23.63	22.66	21.95	21.86	21.95	21.86	21.77	21.77	21.77	21.77

[a)] Other ratios available on request
[b)] Higher speeds are possible if the nominal torque is reduced
[c)] For higher ambient temperatures, please reduce input speed
[d)] Idling torques decrease during operation
[e)] Refers to center of the output shaft or flange

All technical data for front output side applies.
Technical data for rearward output versions, see page 422.

Please contact us for information on the best configuration for S1 conditions of use (continuous operation).

View A

3-stage:

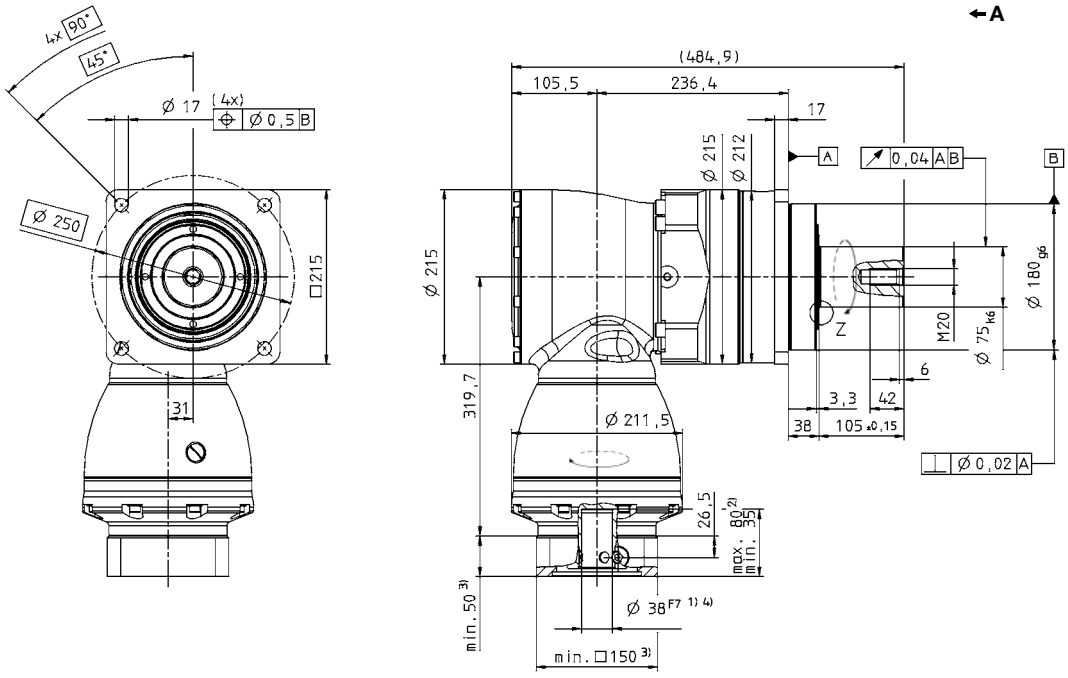

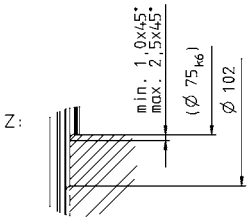

Alternatives: Output shaft variants

Keywayed output shaft in mm

E = key as per DIN 6885, sheet 1, form A

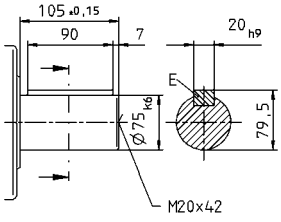

Involute gearing DIN 5480 in mm

X = W 70 x 2 x 30 x 34 x 6m, DIN 5480

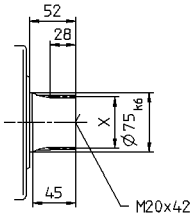

See technical data sheet for available clamping hub diameters (mass moment of inertia). Dimensions available on request.

Non-tolerated dimensions ±1 mm

1) Check motor shaft fit.
2) Min./Max. permissible motor shaft length. Longer motor shafts are adaptable, please contact us.
3) The dimensions depend on the motor.
4) Smaller motor shaft diameter is compensated by a bushing with a minimum thickness of 1 mm.

CAD data is available under http://www.wittenstein-alpha.de/en/info-and-cad-finder.html

Motor mounting according to operating manual

SPK+ 240 MF 3-stage

			3-stage													
Ratio [a]	*i*		**48**	**64**	**100**	**125**	**140**	**175**	**200**	**250**	**280**	**350**	**400**	**500**	**700**	**1000**
Max. acceleration torque (max. 1000 cycles per hour)	T_{2B}	Nm	4500	4500	4500	4500	4500	4500	4500	4500	4300	4500	4000	4300	4300	3400
		in.lb	39825	39825	39825	39825	39825	39825	39825	39825	38055	39825	35400	38055	38055	30090
Nominal output torque (with n_{1N})	T_{2N}	Nm	2500	2500	2500	2500	2500	2500	2500	2500	2300	2500	2500	2500	2300	1700
		in.lb	22125	22125	22125	22125	22125	22125	22125	22125	20355	22125	22125	22125	20355	15045
Emergency stop torque (permitted 1000 times during the service life of the gearhead)	T_{2Not}	Nm	6400	8000	8500	8500	8500	8500	8500	8500	8500	8500	8500	8500	8500	6800
		in.lb	56640	70800	75225	75225	75225	75225	75225	75225	75225	75225	75225	75225	75225	60180
Nominal input speed (with T_{2N} and 20°C ambient temperature) [b), c)]	n_{1N}	rpm	1800	1900	1900	2100	1900	2100	2100	2100	2100	2100	2100	2100	2100	2100
Max. continuous speed (with 20 % T_{2N} and 20°C ambient temperature)	n_{1Ncym}	rpm	2000	2200	2600	2600	2300	2300	2300	2300	2300	2300	2300	2300	2300	2300
Max. input speed	n_{1Max}	rpm	4500	4500	4500	4500	4500	4500	4500	4500	4500	4500	4500	4500	4500	4500
Mean no load running torque (with n_1 = 3000 rpm and 20°C gearhead temperature) [d)]	T_{012}	Nm	11.0	8.0	7.0	7.0	8.0	8.0	7.0	6.0	6.0	6.0	6.0	6.0	6.0	6.0
		in.lb	94.3	70.8	62.0	62.0	70.8	70.8	62.0	53.1	53.1	53.1	53.1	53.1	53.1	53.1
Max. torsional backlash	j_t	arcmin	Standard ≤ 5,5 / Reduced ≤ 3,5													
Torsional rigidity	C_{t21}	Nm/ arcmin	510	510	510	510	510	510	510	510	510	510	510	510	510	510
		in.lb/ arcmin	4.514	4.514	4.514	4.514	4.514	4.514	4.514	4.514	4.514	4.514	4.514	4.514	4.514	4.514
Max. axial force [e)]	F_{2AMax}	N	33000													
		lb_f	7425													
Max. radial force [e)]	F_{2RMax}	N	30000													
		lb_f	6750													
Max. tilting moment	M_{2KMax}	Nm	5000													
		in.lb	44250													
Efficiency at full load	η	%	92													
Service life (For calculation, see the Chapter "Information")	L_h	h	> 20000													
Weight incl. standard adapter plate	*m*	kg	93													
		lb_m	206													
Operating noise (with n_1 = 3000 rpm no load)	L_{PA}	dB(A)	≤ 71													
Max. permitted housing temperature		°C	+90													
		F	194													
Ambient temperature		°C	0 to +40													
		F	32 to 104													
Lubrication			Lubricated for life													
Paint			Blue RAL 5002													
Direction of rotation			Motor and gearhead opposite directions													
Protection class			IP 65													
Moment of inertia (relates to the drive) Clamping hub diameter [mm] K 38	J_1	kgcm²	26.5	20.00	17.00	17.00	15.00	15.00	13.00	13.00	13.00	13.00	13.00	13.00	13.00	13.00
		10^{-3} in.lb.s²	23.40	17.70	15.05	15.05	13.28	13.28	11.51	11.51	11.51	11.51	11.51	11.51	11.51	11.51

[a)] Other ratios available on request
[b)] Higher speeds are possible if the nominal torque is reduced
[c)] For higher ambient temperatures, please reduce input speed
[d)] Idling torques decrease during operation
[e)] Refers to center of the output shaft or flange

All technical data for front output side applies.
Technical data for rearward output versions, see page 422.

Please contact us for information on the best configuration for S1 conditions of use (continuous operation).

View A

3-stage:

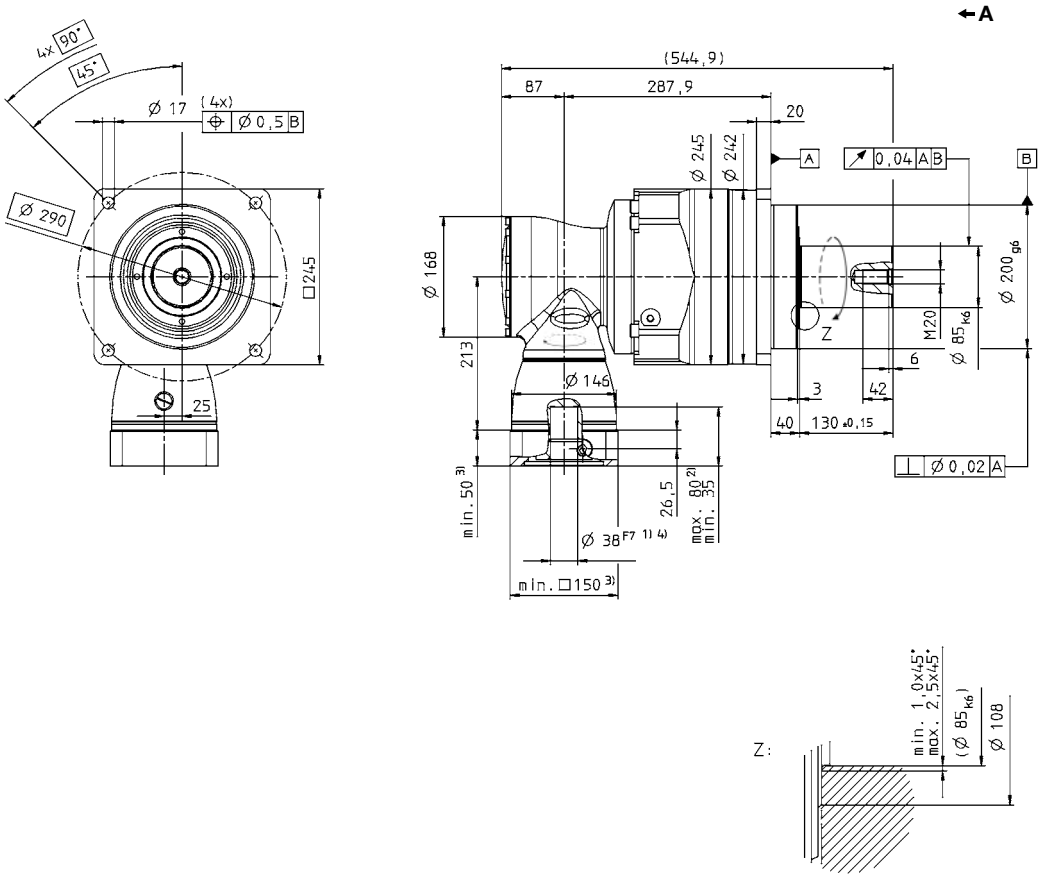

Alternatives: Output shaft variants

Keywayed output shaft in mm
E = key as per DIN 6885, sheet 1, form A

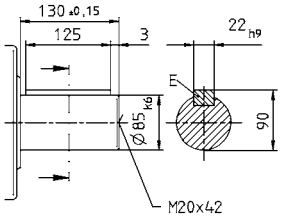

Involute gearing DIN 5480 in mm
X = W 80 x 2 x 30 x 38 x 6m, DIN 5480

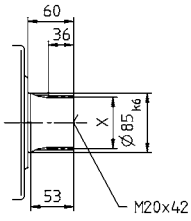

See technical data sheet for available clamping hub diameters (mass moment of inertia). Dimensions available on request.

Non-tolerated dimensions ±1 mm
1) Check motor shaft fit.
2) Min./Max. permissible motor shaft length. Longer motor shafts are adaptable, please contact us.
3) The dimensions depend on the motor.
4) Smaller motor shaft diameter is compensated by a bushing with a minimum thickness of 1 mm.

CAD data is available under
http://www.wittenstein-alpha.de/en/info-and-cad-finder.html

Motor mounting according to operating manual

SPK+ 240 MF 4-stage i=144-1000

				4-stage												
Ratio [a]			***i***	**144**	**192**	**256**	**300**	**375**	**420**	**500**	**560**	**600**	**700**	**800**	**875**	**1000**
Max. acceleration torque (max. 1000 cycles per hour)			T_{2B}	Nm	4500	4500	4500	4500	4500	4500	4500	4500	4500	4500	4500	4500	4500
				in.lb	39825	39825	39825	39825	39825	39825	39825	39825	39825	39825	39825	39825	39825
Nominal output torque (with n_{1N})			T_{2N}	Nm	2500	2500	2500	2500	2500	2500	2500	2500	2500	2500	2500	2500	2500
				in.lb	22125	22125	22125	22125	22125	22125	22125	22125	22125	22125	22125	22125	22125
Emergency stop torque (permitted 1000 times during the service life of the gearhead)			T_{2Not}	Nm	8000	8000	8000	8500	8500	8500	8500	8500	8500	8500	8500	8500	8500
				in.lb	70800	70800	70800	75225	75225	75225	75225	75225	75225	75225	75225	75225	75225
Nominal input speed (with T_{2N} and 20°C ambient temperature) [b), c)]			n_{1N}	rpm	2700	2900	2900	2900	2900	2900	2900	2900	2900	2900	2900	2900	3200
Max. continuous speed (with 20 % T_{2N} and 20°C ambient temperature)			n_{1Ncym}	rpm	3800	4000	4000	4000	4000	4000	4000	4000	4000	4000	4000	4000	4200
Max. input speed			n_{1Max}	rpm	4500	4500	4500	4500	4500	4500	4500	4500	4500	4500	4500	4500	4500
Mean no load running torque (with n_1 = 3000 rpm and 20°C gearhead temperature) [d)]			T_{012}	Nm	3.2	2.3	1.6	1.3	0.7	0.9	0.9	0.8	0.7	0.7	0.6	0.6	0.5
				in.lb	28.3	20.4	14.2	11.5	6.2	8.0	8.0	7.1	6.2	6.2	5.3	5.3	4.4
Max. torsional backlash			j_t	arcmin	Standard ≤ 5,5 / Reduced ≤ 3,5												
Torsional rigidity			C_{t21}	Nm/ arcmin	510	510	510	510	510	510	510	510	510	510	510	510	510
				in.lb/ arcmin	4.514	4.514	4.514	4.514	4.514	4.514	4.514	4.514	4.514	4.514	4.514	4.514	4.514
Max. axial force [e)]			F_{2AMax}	N	33000												
				lb_f	7425												
Max. radial force [e)]			F_{2RMax}	N	30000												
				lb_f	6750												
Max. tilting moment			M_{2KMax}	Nm	5000												
				in.lb	44250												
Efficiency at full load			η	%	90												
Service life (For calculation, see the Chapter "Information")			L_h	h	> 20000												
Weight incl. standard adapter plate			m	kg	96												
				lb_m	212												
Operating noise (with n_1 = 3000 rpm no load)			L_{PA}	dB(A)	≤ 71												
Max. permitted housing temperature				°C	+90												
				F	194												
Ambient temperature				°C	0 to +40												
				F	32 to 104												
Lubrication					Lubricated for life												
Paint					Blue RAL 5002												
Direction of rotation					Motor and gearhead opposite directions												
Protection class					IP 65												
Moment of inertia (relates to the drive) Clamping hub diameter [mm]	G	24	J_1	kgcm²	5.96	4.30	3.90	3.32	3.31	2.80	3.18	2.80	2.49	2.73	2.49	2.73	2.46
				10^{-3} in.lb.s²	5.28	3.81	3.45	2.94	2.93	2.48	2.82	2.47	2.21	2.42	2.20	2.42	2.18
	K	38	J_1	kgcm²	12.87	11.19	10.81	10.23	10.22	9.72	10.09	9.71	9.40	9.65	9.40	9.65	9.37
				10^{-3} in.lb.s²	11.39	9.91	9.57	9.05	9.05	8.60	8.93	8.59	8.32	8.54	8.32	8.54	8.29

[a] Other ratios available on request
[b] Higher speeds are possible if the nominal torque is reduced
[c] For higher ambient temperatures, please reduce input speed
[d] Idling torques decrease during operation
[e] Refers to center of the output shaft or flange

All technical data for front output side applies.
Technical data for rearward output versions, see page 422.

Please contact us for information on the best configuration for S1 conditions of use (continuous operation).

View A

4-stage:

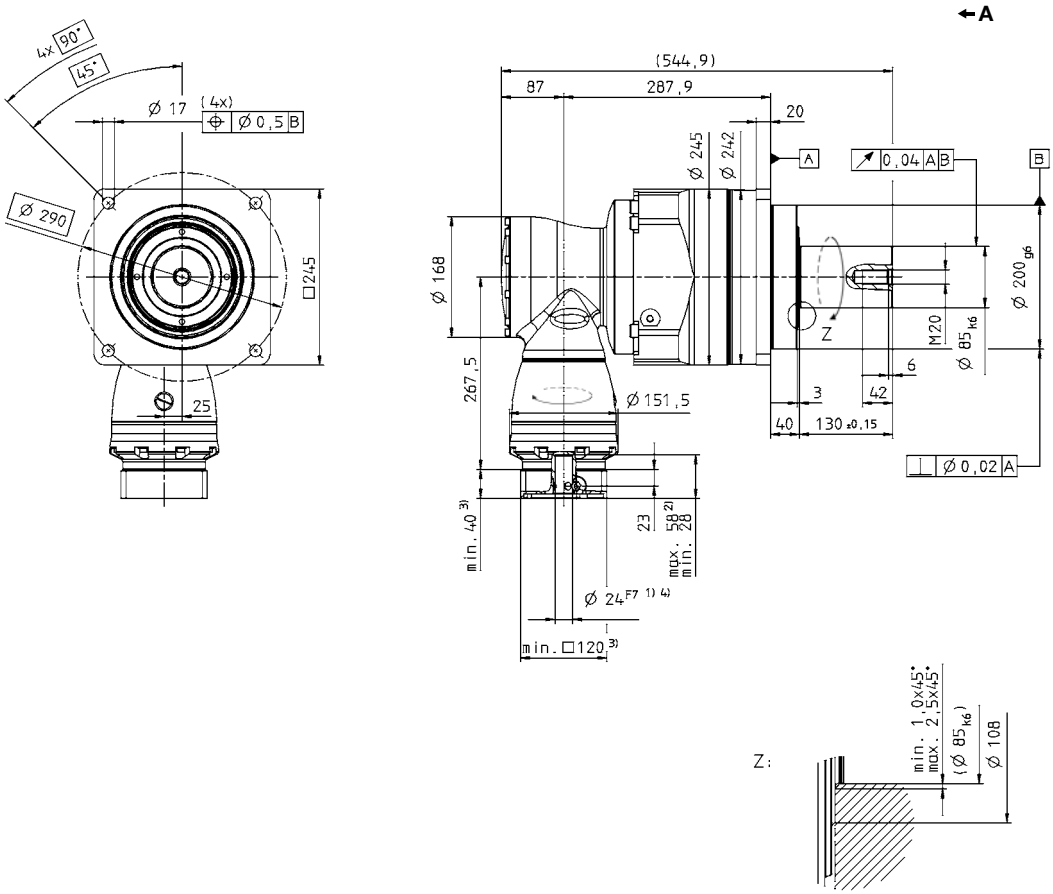

Right-angle gearheads
High End

SPK+

Alternatives: Output shaft variants

Keywayed output shaft in mm
E = key as per DIN 6885, sheet 1, form A

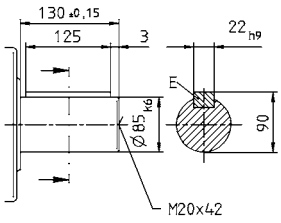

Involute gearing DIN 5480 in mm
X = W 80 x 2 x 30 x 38 x 6m, DIN 5480

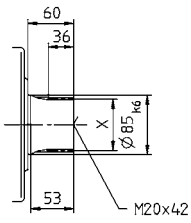

See technical data sheet for available clamping hub diameters (mass moment of inertia). Dimensions available on request.

Non-tolerated dimensions ±1 mm
1) Check motor shaft fit.
2) Min./Max. permissible motor shaft length. Longer motor shafts are adaptable, please contact us.
3) The dimensions depend on the motor.
4) Smaller motor shaft diameter is compensated by a bushing with a minimum thickness of 1 mm.

CAD data is available under
http://www.wittenstein-alpha.de/en/info-and-cad-finder.html

Motor mounting according to operating manual

SPK+ 240 MF 4-stage i=1225-10000

			4-stage								
Ratio [a]	*i*		**1225**	**1400**	**1750**	**2000**	**2800**	**3500**	**5000**	**7000**	**10000**
Max. acceleration torque (max. 1000 cycles per hour)	T_{2B}	Nm	4500	4500	4500	4200	4300	4500	4300	4300	3400
		in.lb	39825	39825	39825	37170	38055	39825	38055	38055	30090
Nominal output torque (with n_{1N})	T_{2N}	Nm	2500	2500	2500	2500	2300	2500	2500	2300	1700
		in.lb	22125	22125	22125	22125	20355	22125	22125	20355	15045
Emergency stop torque (permitted 1000 times during the service life of the gearhead)	T_{2Not}	Nm	8500	8500	8500	8000	8500	8500	8500	8500	6800
		in.lb	75225	75225	75225	70800	75225	75225	75225	75225	60180
Nominal input speed (with T_{2N} and 20°C ambient temperature) [b), c)]	n_{1N}	rpm	2900	2900	3200	3900	3900	3900	3900	3900	3900
Max. continuous speed (with 20 % T_{2N} and 20°C ambient temperature)	n_{1Ncym}	rpm	4000	4000	4200	4200	4200	4200	4200	4200	4200
Max. input speed	n_{1Max}	rpm	4500	4500	4500	4500	4500	4500	4500	4500	4500
Mean no load running torque (with n_1 = 3000 rpm and 20°C gearhead temperature) [d)]	T_{012}	Nm	0.6	0.6	0.4	0.4	0.4	0.4	0.4	0.3	0.3
		in.lb	5.3	5.3	3.5	3.5	3.5	3.5	3.5	2.7	2.7
Max. torsional backlash	j_t	arcmin	Standard ≤5,5 / Reduced ≤3,5								
Torsional rigidity	C_{t21}	Nm/ arcmin	510	510	510	510	510	510	510	510	510
		in.lb/ arcmin	4.514	4.514	4.514	4.514	4.514	4.514	4.514	4.514	4.514
Max. axial force [e)]	F_{2AMax}	N	33000								
		lb_f	7425								
Max. radial force [e)]	F_{2RMax}	N	30000								
		lb_f	6750								
Max. tilting moment	M_{2KMax}	Nm	5000								
		in.lb	44250								
Efficiency at full load	η	%	90								
Service life (For calculation, see the Chapter "Information")	L_h	h	> 20000								
Weight incl. standard adapter plate	*m*	kg	96								
		lb_m	212								
Operating noise (with n_1 = 3000 rpm no load)	L_{PA}	dB(A)	≤ 71								
Max. permitted housing temperature		°C	+90								
		F	194								
Ambient temperature		°C	0 to +40								
		F	32 to 104								
Lubrication			Lubricated for life								
Paint			Blue RAL 5002								
Direction of rotation			Motor and gearhead opposite directions								
Protection class			IP 65								
Moment of inertia (relates to the drive) Clamping hub diameter [mm] — G 24	J_1	kgcm²	2.73	2.49	2.46	2.42	2.42	2.42	2.42	2.42	2.42
		10^{-3} in.lb.s²	2.42	2.20	2.17	2.14	2.14	2.14	2.14	2.14	2.14
K 38	J_1	kgcm²	9.64	9.40	9.37	9.33	9.33	9.33	9.33	9.33	9.33
		10^{-3} in.lb.s²	8.53	8.32	8.29	8.26	8.26	8.26	8.26	8.26	8.26

[a)] Other ratios available on request
[b)] Higher speeds are possible if the nominal torque is reduced
[c)] For higher ambient temperatures, please reduce input speed
[d)] Idling torques decrease during operation
[e)] Refers to center of the output shaft or flange

All technical data for front output side applies.
Technical data for rearward output versions, see page 422.

Please contact us for information on the best configuration for S1 conditions of use (continuous operation).

View A

4-stage:

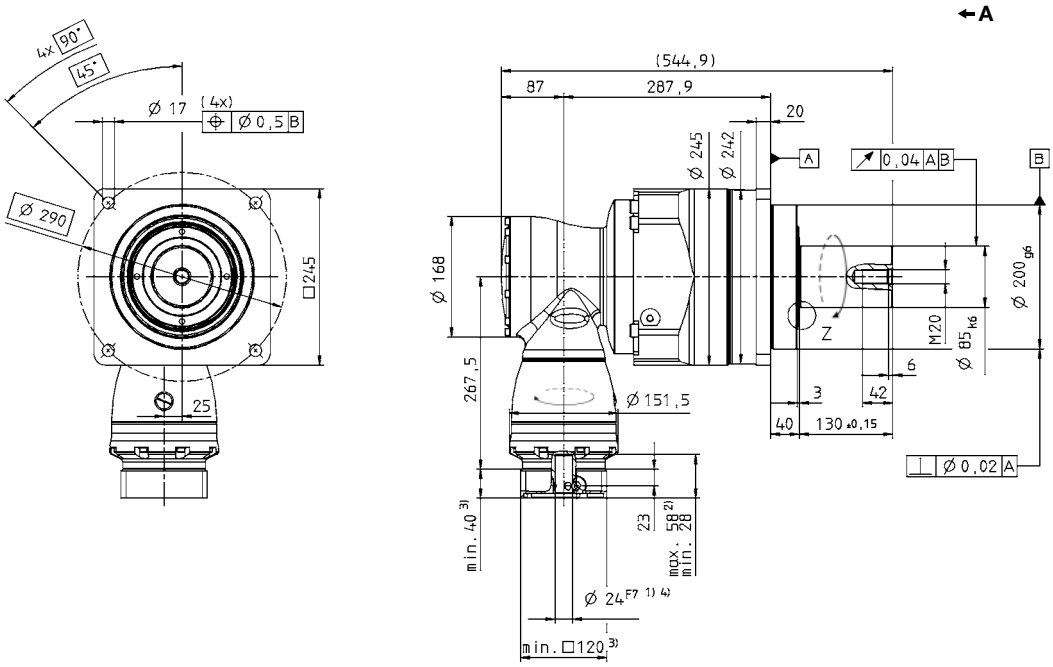

Z:

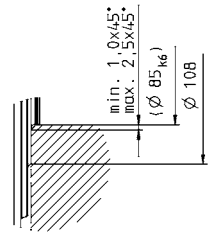

Right-angle gearheads
High End

SPK+

Alternatives: Output shaft variants

Keywayed output shaft in mm
E = key as per DIN 6885, sheet 1, form A

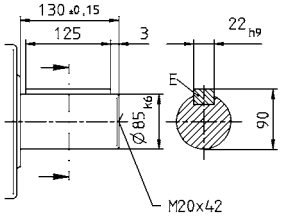

Involute gearing DIN 5480 in mm
X = W 80 x 2 x 30 x 38 x 6m, DIN 5480

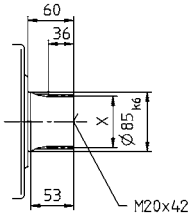

See technical data sheet for available clamping hub diameters (mass moment of inertia). Dimensions available on request.

Non-tolerated dimensions ±1 mm
1) Check motor shaft fit.
2) Min./Max. permissible motor shaft length. Longer motor shafts are adaptable, please contact us.
3) The dimensions depend on the motor.
4) Smaller motor shaft diameter is compensated by a bushing with a minimum thickness of 1 mm.

CAD data is available under
http://www.wittenstein-alpha.de/en/info-and-cad-finder.html

Motor mounting according to operating manual